azienda casa emilia - romagna
provincia di bologna

Piazza della Resistenza 4 - 40122
Bologna - BO
tel. 051.292111 fax 051.554335
Codice Fiscale - Partita IVA e Registro
Imprese di Bologna n. 00322270372
sito web: www.acerbologna.it
posta elettronica: info@acerbologna.it

INTERVENTO

FONDO COMPLEMENTARE AL PIANO NAZIONALE DI RIPRESA E RESILIENZA
PROGRAMMA "SICURO, VERDE E SOCIALE: RIQUALIFICAZIONE DELL'EDILIZIA RESIDENZIALE PUBBLICA"

PROGETTO DI MANUTENZIONE STRAORDINARIA PER IL RESTAURO E RISANAMENTO CONSERVATIVO DI DUE CASAMENTI A CORTE SITI IN COMUNE DI BOLOGNA LOCALITA' CIRENAICA. VIA BENTIVOGLI CIV. 31÷59 PER COMPLESSIVI 56 ALLOGGI DI ERP CON RELATIVE PERTINENZE E PARTI COMUNI

LOTTO **3053/PN_1**

PROGETTO ESECUTIVO

TAV.	OGGETTO	DATA
TAB_07	TABULATI DI CALCOLO CIVICO 37 STATO DI FATTO	Settembre 2022
SCALA		N. DISEGNO

VERSIONE	DESCRIZIONE	DATA	REDATTO	VERIFICATO		APPROVATO
00	PRIMA EMISSIONE	Settembre 2022	F. DALMONTE	N. LEONE		N. LEONE
01						
02						
03						

Il Progettista Architettonico

Arch. Francesca Tovoli
Ing. Nicola Leone

SIDEL Ingegneria Srl
Via Isonzo, 13
40055 Villanova di Castenaso (BO)

Il Progettista Strutturale

Ing. Nicola Leone

SIDEL Ingegneria Srl
Via Isonzo, 13
40055 Villanova di Castenaso (BO)

Il Progettista Impianti Elettrici

Ing. Nicola Leone

SIDEL Ingegneria Srl
Via Isonzo, 13
40055 Villanova di Castenaso (BO)

Il Progettista Impianti Meccanici

Ing. Nicola Leone

SIDEL Ingegneria Srl
Via Isonzo, 13
40055 Villanova di Castenaso (BO)

Il Coordinatore della Sicurezza in Fase Progettuale

Ing. Nicola Leone

SIDEL Ingegneria Srl
Via Isonzo, 13
40055 Villanova di Castenaso (BO)

Il Coordinatore per la progettazione

Ing. Nicola Leone

SIDEL Ingegneria Srl
Via Isonzo, 13
40055 Villanova di Castenaso (BO)

Collaboratori Progettisti:

Ing. Marco Venturini
Ing. Federica Dalmonte
Geom. Alessio Breviglieri
Arch. Domenico Conaci
Geom. Arianna Danieli
P. I. Andrea Gamberini
Ing. Cesare Orsini

Responsabile del Procedimento

Ing. Antonio Frighi

ACER Bologna
Piazza della Resistenza, 4
40122 Bologna

Il Dirigente Responsabile del Servizio Tecnico

Ing. Antonio Frighi

ACER Bologna
Piazza della Resistenza, 4
40122 Bologna

Il Direttore Generale

Avv. Francesco Nitti

ACER Bologna
Piazza della Resistenza, 4
40122 Bologna

Il Presidente

Marco Bertuzzi

ACER Bologna
Piazza della Resistenza, 4
40122 Bologna

SIDEL
INGEGNERIA

TABULATI DI CALCOLO
CIVICO 37
STATO DI FATTO

Sommario

1 Risultati numerici

1.1 Sollecitazioni

1.1.1 Sollecitazioni aste

1.1.1.1 Convenzioni di segno aste

Le abbreviazioni relative alle sollecitazioni sugli elementi aste sono da intendersi:

- F1 (N): sforzo normale nell'asta;
- F2: sforzo di taglio agente nella direzione dell'asse locale 2;
- F3: sforzo di taglio agente nella direzione dell'asse locale 3;
- M1 (Mt): momento attorno all'asse locale 1; equivale al momento torcente;
- M2: momento attorno all'asse locale 2;
- M3: momento attorno all'asse locale 3.

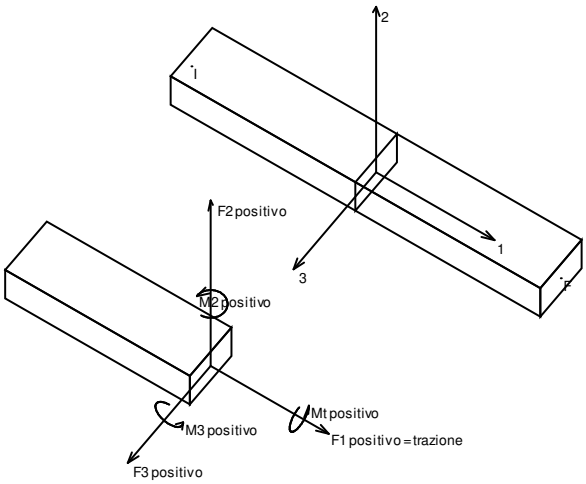

La convenzione sui segni per i parametri di sollecitazione delle aste è la seguente:
presa un'asta con nodo iniziale i e nodo finale f, asse 1 che va da i a f, assi 2 e 3 presi secondo quanto indicato nei paragrafi successivi relativi al sistema locale delle aste sezionando l'asta in un punto e considerando la sezione sinistra del punto in cui si è effettuato il taglio (sezione da cui esce il versore asse 1) i parametri di sollecitazione sono positivi se hanno verso e direzione concordi con il sistema di riferimento locale dell'asta 1, 2, 3 (per i momenti si adotta la regola della mano destra).

Il sistema è definito diversamente per tre categorie di aste, a seconda che siano originate da:

- aste verticali ad esempio pilastri e colonne;
- aste non verticali non di c.a., ad esempio travi di acciaio o legno;
- aste non verticali in c.a.: travi in c.a. di piano, falda o a quota generica.

Nel seguito si indica con 1, 2 e 3 il sistema locale dell'asta che non sempre coincide con gli assi principali della sezione. Si ricorda che per assi principali si intendono gli assi rispetto a cui si ha il raggio di inerzia minimo e massimo. Gli assi 1, 2 e 3 rispettano la regola della mano destra.

Sistema locale aste verticali

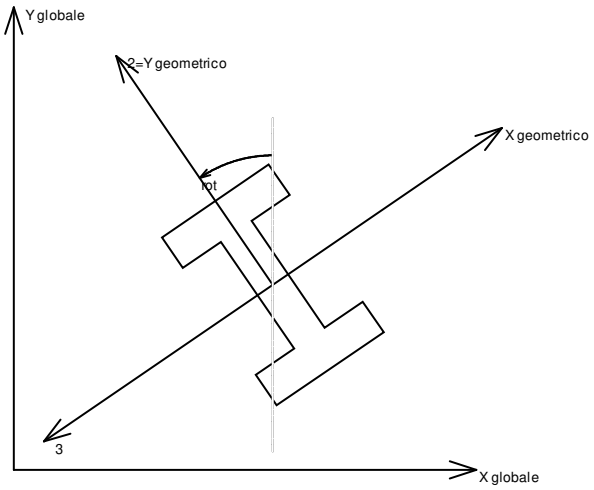

Nella figura si considera l'asse 1 uscente dal foglio (l'osservatore guarda in direzione opposta a quella dell'asse 1).

Sistema locale aste non verticali

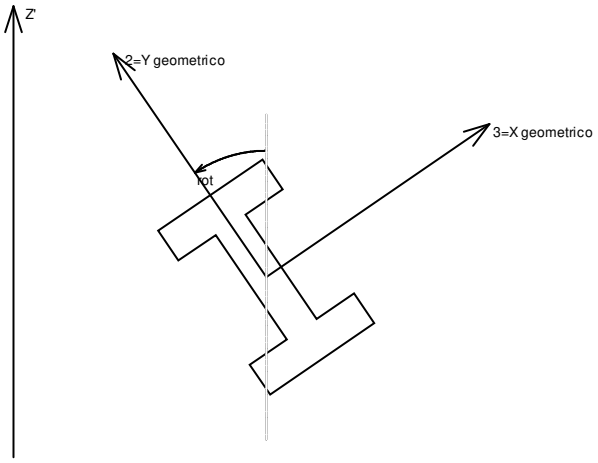

Nella figura si considera l'asse 1 entrante nel foglio (l'osservatore guarda in direzione coincidente a quella dell'asse 1).

L'asse Z' è illustrato nella figura seguente dove:

- P1 è il punto di inserimento iniziale dell'asta;
- P2 è il punto di inserimento finale dell'asta;
- N è la normale al piano o falda di inserimento;

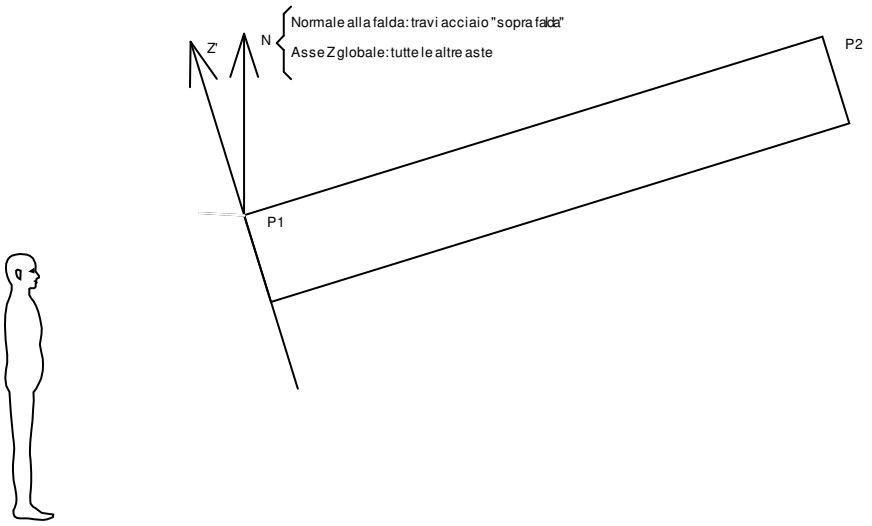

Z' è quindi l'intersezione tra il piano passante per P1, P2 contenente N e il piano della sezione iniziale dell'asta.

Sistema locale aste derivanti da travi in c.a.

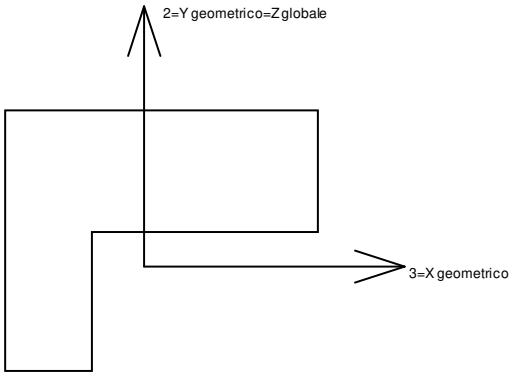

Nella figura si considera l'asse 1 entrante nel foglio (l'osservatore guarda in direzione coincidente a quella dell'asse 1). L'asse 2 è sempre verticale e quindi coincidente con l'asse Z globale nonché con l'asse y geometrico. L'asse 3 coincide con l'asse x geometrico. . Si sottolinea il fatto che gli assi 2 e 3 non corrispondono agli assi principali della sezione.

1.1.1.2 Sollecitazioni estreme aste

Asta: elemento asta a cui si riferiscono le sollecitazioni.
Ind.: indice dell'asta.
Cont.: contesto a cui si riferisce la sollecitazione
N.br.: nome breve della condizione o combinazione di carico.
Pos.: numero della sezione all'interno dell'asta (tra 1 e 31, dove 1 corrisponde alla sezione al nodo iniziale, 16 è la sezione in mezzeria, 31 corrisponde alla sezione al nodo finale).
Posizione: posizione a cui si riferisce la sollecitazione dell'asta.
X: componente X della posizione a cui si riferisce la sollecitazione dell'asta. [m]
Y: componente Y della posizione a cui si riferisce la sollecitazione dell'asta. [m]
Z: componente Z della posizione a cui si riferisce la sollecitazione dell'asta. [m]
Soll.traslazionale: componente traslazionale della sollecitazione dell'asta.
F1: componente F1 della sollecitazione dell'asta. [daN]
F2: componente F2 della sollecitazione dell'asta. [daN]
F3: componente F3 della sollecitazione dell'asta. [daN]
Soll.rotazionale: componente rotazionale della sollecitazione dell'asta.
*M1: componente M1 della sollecitazione dell'asta. [daN*m]*
*M2: componente M2 della sollecitazione dell'asta. [daN*m]*
*M3: componente M3 della sollecitazione dell'asta. [daN*m]*

Sollecitazioni con sforzo normale (N) minimo

Vengono mostrate le sole 5 aste più sollecitate.

Asta	Cont.	Pos.	Posizione			Soll.traslazionale			Soll.rotazionale		
Ind.	N.br.		X	Y	Z	F1	F2	F3	M1	M2	M3

Asta	Cont.	Pos.	Posizione			Soll.traslazionale			Soll.rotazionale		
Ind.	N.br.		X	Y	Z	F1	F2	F3	M1	M2	M3
107	SLV 13	1	-15.28	1.14	17.64	-6141	-432	-534	14.34	-722.88	-2.35
76	SLV Y	1	-11.17	-3.18	15.15	-5998	-27	-97	-0.04	-142.16	-74.81
166	SLV Y	1	-11	-3.18	15.15	-5960	-31	601	-0.04	-185.47	-79.43
106	SLV 13	1	-15.68	1.14	17.64	-5944	-72	-477	-1.35	-576.41	-3.89
105	SLV 13	1	-16.09	1.14	17.64	-5914	-34	-439	-0.54	-449.3	2.14

Sollecitazioni con sforzo normale (N) massimo

Vengono mostrate le sole 5 aste più sollecitate.

Asta	Cont.	Pos.	Posizione			Soll.traslazionale			Soll.rotazionale		
Ind.	N.br.		X	Y	Z	F1	F2	F3	M1	M2	M3
76	SLV 9	1	-11.17	-3.18	15.15	9275	-321	304	0.08	-93.57	-27.66
166	SLV 5	1	-11	-3.18	15.15	9238	-391	-746	0.02	392.89	-120.25
165	SLV 5	1	-10.6	-3.18	15.15	7697	491	708	-22.37	833	-97.67
46	SLV 9	1	-13.73	-3.18	15.15	7676	-749	-757	18.23	1159.13	-366.18
164	SLV 5	1	-10.19	-3.18	15.15	6663	-211	731	-18.11	494.42	-75.61

Sollecitazioni con momento M2 minimo

Vengono mostrate le sole 5 aste più sollecitate.

Asta	Cont.	Pos.	Posizione			Soll.traslazionale			Soll.rotazionale		
Ind.	N.br.		X	Y	Z	F1	F2	F3	M1	M2	M3
5	SLV 13	31	-10.99	-4.7	14.51	-36	-181	-2242	25.46	-2456.18	-17.67
255	SLV 11	31	-11	-4.7	14.51	5381	-530	-1383	39.65	-2391	158.83
45	SLV 15	31	-13.73	-4.7	14.52	233	172	-2199	21.31	-2340.95	-38.88
107	SLV 9	31	-14.87	1.14	17.64	-6072	-722	-1184	45.14	-2222.08	294.4
263	SLV Y	1	-13.73	-4.7	14.52	3709	812	1229	-32.83	-2168.33	324.98

Sollecitazioni con momento M2 massimo

Vengono mostrate le sole 5 aste più sollecitate.

Asta	Cont.	Pos.	Posizione			Soll.traslazionale			Soll.rotazionale		
Ind.	N.br.		X	Y	Z	F1	F2	F3	M1	M2	M3
263	SLV 9	1	-13.73	-4.7	14.52	-3249	-512	-1389	37.21	2453.08	-206.27
255	SLV 5	31	-11	-4.7	14.51	-2789	633	1377	-39.83	2349.9	-261.43
45	SLV 1	31	-13.73	-4.7	14.52	-131	-68	2136	-20.57	2315.52	26.65
5	SLV 3	31	-10.99	-4.7	14.51	3	184	2132	-23.94	2303.91	17.76
107	SLV 7	31	-14.87	1.14	17.64	609	452	1122	-68.04	2151.71	-164.72

Sollecitazioni con momento M3 minimo

Vengono mostrate le sole 5 aste più sollecitate.

Asta	Cont.	Pos.	Posizione			Soll.traslazionale			Soll.rotazionale		
Ind.	N.br.		X	Y	Z	F1	F2	F3	M1	M2	M3
247	SLU 72	1	-4.97	1.14	17.66	-1524	-5786	9	-0.24	18.06	-5771.52
246	SLU 71	31	-4.94	1.14	17.64	-1687	4939	14	-0.77	72.93	-5408.36
134	SLU 80	31	-4.94	1.14	17.64	2975	9349	9	25.94	-131.2	-3753.95
245	SLU 79	1	-5.09	5.94	15.19	-910	-2194	-30	2.09	55.02	-2606.28
244	SLU 71	1	-19.67	5.94	15.18	-959	-2163	59	-2.12	-174.1	-2558.07

Sollecitazioni con momento M3 massimo

Vengono mostrate le sole 5 aste più sollecitate.

Asta	Cont.	Pos.	Posizione			Soll.traslazionale			Soll.rotazionale		
Ind.	N.br.		X	Y	Z	F1	F2	F3	M1	M2	M3
247	SLU 71	15	-2.71	-0.9	16.51	-3730	107	-3	-0.19	29.23	2710.27
137	SLU 72	1	-0.12	-3.18	15.15	206	5506	-161	-18.05	26.01	2672.57
189	SLU 72	31	-0.12	-3.18	15.15	197	-4779	-2	10.56	102.96	2329.72
246	SLU 80	17	-2.7	3.38	16.51	-3659	6	14	-0.78	20.73	2199.47
201	SLU 72	31	-0.12	5.95	15.15	275	-4641	-29	5.26	-71.72	2119.32

1.1.2 Sollecitazioni gusci

1.1.2.1 Convenzioni di segno gusci

Sono individuate distinte convenzioni di segno in relazione al tipo di elemento strutturale a cui il guscio si riferisce:

- convenzione per gusci non verticali, originati ad esempio da piastre e platee;
- convenzione per gusci verticali, originati ad esempio da pareti e muri.

Convenzione di segno per gusci non verticali

Il sistema di riferimento nel quale sono espressi i parametri di sollecitazione è così definito: origine appartenente al piano dell'elemento, asse x e y contenuti nel piano dell'elemento e terzo asse (z) ortogonale al piano dell'elemento a formare una terna destrogira. In particolare l'asse x ha proiezione in pianta parallela ed equiversa all'asse globale X. Nel caso di piastre orizzontali (caso più comune) gli assi x, y e z locali all'elemento sono paralleli ed equiversi agli assi X, Y e Z globali. Si sottolinea che non ha alcun interesse collocare esattamente nel piano dell'elemento la posizione dell'origine in quanto i parametri di sollecitazione sono invarianti rispetto a tale posizione.
In figura è mostrato un elemento infinitesimo di shell orizzontale con indicato il sistema di riferimento e i parametri di sollecitazione Mxx, Myy, Mxy.

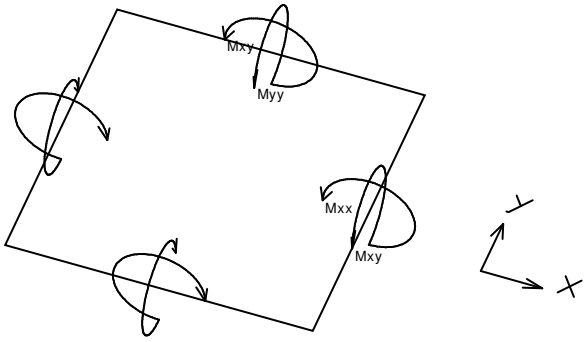

Si definiscono:

- Mxx: momento flettente [Forza*Lunghezza/Lunghezza] agente sul bordo di normale x (verso positivo indicato dalla freccia in figura che tende le fibre inferiori);
- Myy: momento flettente [Forza*Lunghezza/Lunghezza] agente sul bordo di normale y (verso positivo indicato dalla freccia in figura che tende le fibre inferiori);
- Mxy: momento torcente [Forza*Lunghezza/Lunghezza] agente sui bordi (verso positivo indicato dalla freccia in figura).

Per quanto riguarda le sollecitazioni estensionali si faccia riferimento alla figura seguente dove per lo stesso elemento infinitesimo di shell orizzontale con indicato il sistema di riferimento e i parametri di sollecitazione Fxx, Fyy, Fxy.

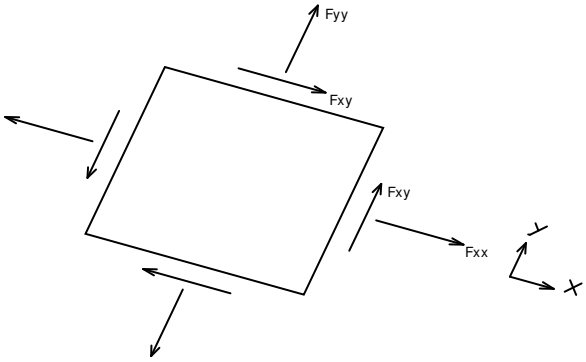

Si definiscono:

- Fxx: sforzo estensionale [Forza/Lunghezza] agente sul bordo di normale x (verso positivo indicato dalla freccia in figura che mette in trazione l'elemento);
- Fyy: sforzo estensionale [Forza/Lunghezza] agente sul bordo di normale all'asse y (verso positivo indicato dalla freccia in figura che mette in trazione l'elemento);
- Fxy: sforzo di taglio [Forza/Lunghezza] agente sui bordi (verso positivo indicato dalla freccia in figura).

Vengono riportati inoltre i tagli fuori dal piano dell'elemento guscio:

- Vx: taglio fuori piano [Forza/Lunghezza] applicato al bordo di normale parallela all'asse x;
- Vy: taglio fuori piano [Forza/Lunghezza] applicato al bordo di normale parallela all'asse y.

Convenzione di segno per gusci verticali

Il sistema di riferimento nel quale sono espressi i parametri di sollecitazione è così definito: origine appartenente al piano dell'elemento, asse O (ascisse) e z (ordinate) contenuti nel piano dell'elemento e terzo asse ortogonale al piano dell'elemento a formare una terna destrogira. In particolare l'asse O è orizzontale e l'asse z parallelo ed equiverso con l'asse Z globale. Si sottolinea che non ha alcun interesse collocare esattamente nel piano dell'elemento la posizione dell'origine in quanto i parametri di sollecitazione sono invarianti rispetto a tale posizione.In figura è mostrato un elemento infinitesimo di shell orizzontale con indicato il sistema di riferimento e i parametri di sollecitazione Moo, Mzz, Moz.

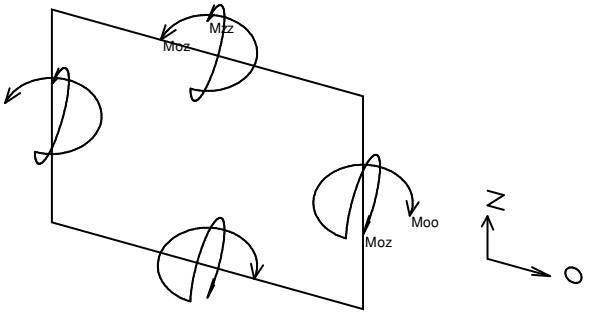

- Moo: momento flettente distribuito [Forza*Lunghezza/Lunghezza] applicato al bordo di normale parallela all'asse O (verso positivo indicato dalla freccia in figura che tende le fibre inferiori);
- Mzz: momento flettente distribuito [Forza*Lunghezza/Lunghezza] applicato al bordo di normale parallela all'asse z (verso positivo indicato dalla freccia in figura che tende le fibre inferiori);
- Moz: momento 'torcente' distribuito [Forza*Lunghezza/Lunghezza] applicato sui bordi (verso positivo indicato dalla freccia in figura).

Per quanto riguarda le sollecitazioni estensionali si faccia riferimento alla figura seguente dove per lo stesso elemento infinitesimo di shell con indicato il sistema di riferimento i parametri di sollecitazione Foo, Fzz, Foz sono rispettivamente:

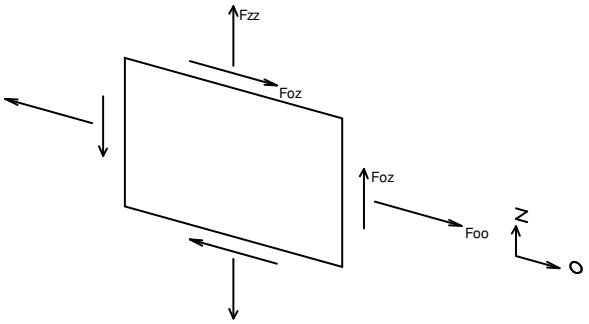

- Fzz: sforzo tensionale distribuito [Forza/Lunghezza] applicato al bordo di normale parallela all'asse z (verso positivo indicato dalla freccia in figura che mette in trazione l'elemento);
- Foo: sforzo tensionale distribuito [Forza/Lunghezza] applicato al bordo di normale parallela all'asse O (verso positivo indicato dalla freccia in figura che mette in trazione l'elemento);
- Foz: sforzo tagliante distribuito [Forza/Lunghezza] applicato sui bordi (verso positivo indicato dalla freccia in figura).

Vengono riportati inoltre i tagli fuori dal piano dell'elemento guscio:

- Vo: taglio fuori piano applicato al bordo di normale parallela all'asse O;
- Vz: taglio fuori piano applicato al bordo di normale parallela all'asse z.

1.1.2.2 Sollecitazioni estreme gusci

Shell: *elemento guscio a cui si riferiscono le sollecitazioni.*
Ind: *indice del guscio.*
Cont.: *contesto a cui si riferiscono le sollecitazioni.*
N.br.: *nome breve della condizione o combinazione di carico.*
Nodo: *nodo su cui si basa il guscio a cui si riferisce la sollecitazione.*
Ind: *indice del nodo.*
Sollecitazione: *valori della sollecitazione.*
M11: *componente M11 della sollecitazione del guscio nel nodo indicato. [daN*m/m]*
M12: *componente M12 della sollecitazione del guscio nel nodo indicato. [daN*m/m]*
M22: *componente M22 della sollecitazione del guscio nel nodo indicato. [daN*m/m]*
F11: *componente F11 della sollecitazione del guscio nel nodo indicato. [daN/m]*
F12: *componente F12 della sollecitazione del guscio nel nodo indicato. [daN/m]*
F22: *componente F22 della sollecitazione del guscio nel nodo indicato. [daN/m]*
V13: *componente V13 della sollecitazione del guscio nel nodo indicato. [daN/m]*
V23: *componente V23 della sollecitazione del guscio nel nodo indicato. [daN/m]*

Sollecitazioni con momento M11 minimo

Vengono mostrati i soli 5 gusci più sollecitati.

Shell	Cont.	Nodo	Sollecitazione							
Ind	N.br.	Ind	M11	M12	M22	F11	F12	F22	V13	V23
3027	SLV 7	3404	-4141	-485	-1168	842	8261	7240	12477	7135

Shell	Cont.	Nodo	Sollecitazione							
Ind	N.br.	Ind	M11	M12	M22	F11	F12	F22	V13	V23
2675	SLV 11	3449	-3954	247	-1463	44706	-7000	12764	-9847	7289
3036	SLV 7	3403	-3226	-344	-633	-1317	16384	-5717	15972	3069
2676	SLV 11	3450	-3214	-15	-717	1020	-14682	-4223	-14927	189
2673	SLV 11	3447	-2810	797	270	-3619	-4843	5154	-29793	2112

Sollecitazioni con momento M11 massimo

Vengono mostrati i soli 5 gusci più sollecitati.

Shell	Cont.	Nodo	Sollecitazione							
Ind	N.br.	Ind	M11	M12	M22	F11	F12	F22	V13	V23
2674	SLV 11	3447	3878	-80	2417	-16672	-11431	-19073	-10283	-10462
3018	SLV 7	3406	3642	-52	-629	-13370	121	-871	9232	-7353
2673	SLV 11	3446	3466	146	-625	16956	-27742	-18025	-27082	-1387
2485	SLV 9	3410	3188	197	1747	17198	-6909	-39024	4124	-9107
3009	SLV 7	3407	3115	-75	-373	14198	25851	-16057	23441	857

Sollecitazioni con momento M22 minimo

Vengono mostrati i soli 5 gusci più sollecitati.

Shell	Cont.	Nodo	Sollecitazione							
Ind	N.br.	Ind	M11	M12	M22	F11	F12	F22	V13	V23
14688	SLV 7	3198	77	-361	-1948	-57137	30242	-64933	-135	6297
14689	SLV 7	3198	533	331	-1786	-13707	-78	-36581	-1226	4926
3388	SLV 11	3199	347	246	-1683	-69232	-53940	-45854	2808	5187
3379	SLV 11	3199	-245	-331	-1677	-15802	-15855	-30057	1373	4714
3018	SLV Y	3406	2800	127	-1550	-16454	-7070	12074	7077	-5129

Sollecitazioni con momento M22 massimo

Vengono mostrati i soli 5 gusci più sollecitati.

Shell	Cont.	Nodo	Sollecitazione							
Ind	N.br.	Ind	M11	M12	M22	F11	F12	F22	V13	V23
3018	SLV 5	3406	-1957	-305	2471	19538	14261	-25020	-4921	2906
2674	SLV 11	3447	3878	-80	2417	-16672	-11431	-19073	-10283	-10462
2485	SLU 83	3410	1699	-3	1948	-5808	-20979	-53067	-7897	-8228
2994	SLU 84	3410	973	100	1832	-18352	12572	-50932	3806	-4693
2675	SLV 5	3449	2298	-374	1593	-9104	6670	-12737	5953	-5462

Sollecitazioni con sforzo F11 minimo

Vengono mostrati i soli 5 gusci più sollecitati.

Shell	Cont.	Nodo	Sollecitazione							
Ind	N.br.	Ind	M11	M12	M22	F11	F12	F22	V13	V23
5363	SLU 83	4103	35	-32	9	-315396	-71397	-129162	-519	-136
4020	SLU 83	2953	-14	-66	13	-188574	1483	-53157	-244	72
5361	SLU 83	4107	0	59	-49	-115797	28532	-53859	-446	239
3639	SLU 83	3124	-71	54	-10	-105665	-86476	-100540	346	-452
16761	SLV 9	6647	-83	13	16	-97604	-28097	-57302	-250	-826

Sollecitazioni con sforzo F11 massimo

Vengono mostrati i soli 5 gusci più sollecitati.

Shell	Cont.	Nodo	Sollecitazione							
Ind	N.br.	Ind	M11	M12	M22	F11	F12	F22	V13	V23
5363	SLU 83	3526	27	32	-34	182580	54793	62977	-519	-136
3639	SLU 83	3393	-10	-11	-2	150610	92576	83018	-946	-245
4020	SLU 83	3392	6	-37	-22	136826	13226	49400	-244	72
14691	SLU 83	3208	-106	0	-27	92641	58985	53527	-608	-182
16761	SLV 9	6977	-132	-3	-71	90527	44610	14705	-86	-194

Sollecitazioni con sforzo F22 minimo

Vengono mostrati i soli 5 gusci più sollecitati.

Shell	Cont.	Nodo	Sollecitazione							
Ind	N.br.	Ind	M11	M12	M22	F11	F12	F22	V13	V23
16770	SLV 9	6569	-13	-10	-24	969	9712	-242160	-241	43
16776	SLV 7	3197	406	-221	682	-5769	1696	-223936	-4260	2255
16816	SLV 7	16597	34	55	10	-17264	4874	-220665	170	-61
16771	SLV 9	6118	5	-19	-8	-20981	18785	-199590	55	19
16912	SLV 7	16598	-32	-40	-8	-16458	4564	-195565	-277	64

Sollecitazioni con sforzo F22 massimo

Vengono mostrati i soli 5 gusci più sollecitati.

Shell	Cont.	Nodo	Sollecitazione							
Ind	N.br.	Ind	M11	M12	M22	F11	F12	F22	V13	V23
16816	SLV 9	16597	-33	-54	-11	15962	-4908	206857	-165	63
16770	SLV Y	6569	18	18	22	-1548	-8699	203861	264	-57
16776	SLV 9	3197	-307	140	-567	13245	12659	203626	2712	-1956
16912	SLV 9	16598	31	41	9	14970	-4514	179123	265	-65
16775	SLV 9	4083	71	-85	115	16702	16922	171722	-457	378

1.1.2.3 Sollecitazioni estreme gusci non verticali

Shell: *elemento guscio a cui si riferiscono le sollecitazioni.*
Ind: *indice del guscio.*
Cont.: *contesto a cui si riferiscono le sollecitazioni.*
N.br.: *nome breve della condizione o combinazione di carico.*
Nodo: *nodo su cui si basa il guscio a cui si riferisce la sollecitazione.*
Ind: *indice del nodo.*
Sollecitazione: *valori della sollecitazione.*

*Mxx: componente Mxx della sollecitazione del guscio nel nodo indicato. [daN*m/m]*
*Mxy: componente Mxy della sollecitazione del guscio nel nodo indicato. [daN*m/m]*
*Myy: componente Myy della sollecitazione del guscio nel nodo indicato. [daN*m/m]*
Fxx: componente Fxx della sollecitazione del guscio nel nodo indicato. [daN/m]
Fxy: componente Fxy della sollecitazione del guscio nel nodo indicato. [daN/m]
Fyy: componente Fyy della sollecitazione del guscio nel nodo indicato. [daN/m]
Vx: componente Vo della sollecitazione del guscio nel nodo indicato. [daN/m]
Vy: componente Vz della sollecitazione del guscio nel nodo indicato. [daN/m]

Sollecitazioni con momento Mxx minimo

Vengono mostrati i soli 5 gusci più sollecitati.

Shell	Cont.	Nodo	Sollecitazione							
Ind	N.br.	Ind	Mxx	Mxy	Myy	Fxx	Fxy	Fyy	Vx	Vy
1	SLV 13	3211	-984	130	-162	17932	5606	-20230	5753	-235
16161	SLV 5	17990	-761	38	-852	-412	516	-3700	285	2919
15898	SLV 9	17983	-741	-53	-830	-367	-998	-2939	-220	2700
14948	SLV 15	3374	-660	31	-204	-20461	-4329	3115	-1950	637
14949	SLV 15	3374	-637	-34	-168	-21348	-1685	3163	-1798	-272

Sollecitazioni con momento Mxx massimo

Vengono mostrati i soli 5 gusci più sollecitati.

Shell	Cont.	Nodo	Sollecitazione							
Ind	N.br.	Ind	Mxx	Mxy	Myy	Fxx	Fxy	Fyy	Vx	Vy
1	SLV 13	3243	1174	142	584	12307	1094	-5396	5665	1632
3907	SLV 11	3694	1143	379	561	-20487	18438	-11936	3204	937
3642	SLV 13	3375	815	-389	1153	-12038	7293	-10169	-2502	4792
16161	SLV Y	17990	692	-48	768	-899	-628	1828	-303	-2656
15898	SLV Y	17983	666	65	741	-843	482	1884	241	-2432

Sollecitazioni con momento Myy minimo

Vengono mostrati i soli 5 gusci più sollecitati.

Shell	Cont.	Nodo	Sollecitazione							
Ind	N.br.	Ind	Mxx	Mxy	Myy	Fxx	Fxy	Fyy	Vx	Vy
16161	SLV 5	17990	-761	38	-852	-412	516	-3700	285	2919
15898	SLV 9	17983	-741	-53	-830	-367	-998	-2939	-220	2700
15703	SLV 9	17983	-567	137	-732	258	-592	-2189	-1963	1089
15889	SLV 9	17990	-489	66	-724	-1039	505	-4691	-1963	1277
15720	SLV 5	17990	-560	-144	-715	88	-31	-2728	1955	994

Sollecitazioni con momento Myy massimo

Vengono mostrati i soli 5 gusci più sollecitati.

Shell	Cont.	Nodo	Sollecitazione							
Ind	N.br.	Ind	Mxx	Mxy	Myy	Fxx	Fxy	Fyy	Vx	Vy
3642	SLV 13	3375	815	-389	1153	-12038	7293	-10169	-2502	4792
16161	SLV Y	17990	692	-48	768	-899	-628	1828	-303	-2656
15898	SLV Y	17983	666	65	741	-843	482	1884	241	-2432
15703	SLV Y	17983	511	-122	657	-1187	349	1310	1792	-991
15889	SLV Y	17990	436	-54	650	-1278	-1184	1205	1768	-1148

Sollecitazioni con sforzo Fxx minimo

Vengono mostrati i soli 5 gusci più sollecitati.

Shell	Cont.	Nodo	Sollecitazione							
Ind	N.br.	Ind	Mxx	Mxy	Myy	Fxx	Fxy	Fyy	Vx	Vy
5361	SLU 83	4107	44	61	5	-126902	-1704	-42754	-501	-71
1738	SLV 1	3937	3	2	-415	-76168	-12246	-28921	-90	-1257
1856	SLV 1	3394	-46	44	136	-71018	-20026	-16291	-342	-619
1956	SLV 1	3275	278	-108	143	-60443	1197	-24363	-1076	1533
6175	SLV 13	3332	259	-195	63	-49129	-5255	-4938	-1195	1128

Sollecitazioni con sforzo Fxx massimo

Vengono mostrati i soli 5 gusci più sollecitati.

Shell	Cont.	Nodo	Sollecitazione							
Ind	N.br.	Ind	Mxx	Mxy	Myy	Fxx	Fxy	Fyy	Vx	Vy
5361	SLU 83	3526	14	-8	29	43407	-20157	4759	-501	-71
3738	SLU 83	2945	15	25	117	28156	22673	5466	660	952
1556	SLU 84	3974	43	-37	-48	26108	-37518	38952	-667	317
1738	SLV X	3937	30	8	154	25124	3427	14062	-117	423
16954	SLV 13	4122	-23	40	59	24474	3739	-9614	184	-60

Sollecitazioni con sforzo Fyy minimo

Vengono mostrati i soli 5 gusci più sollecitati.

Shell	Cont.	Nodo	Sollecitazione							
Ind	N.br.	Ind	Mxx	Mxy	Myy	Fxx	Fxy	Fyy	Vx	Vy
1956	SLV 5	3926	-54	107	-217	-19263	-18690	-89052	707	-167
16860	SLV 11	6183	-186	171	-327	-9811	29211	-85860	-1814	1185
16954	SLV 5	3185	92	38	51	-18946	4334	-71311	108	-232
17388	SLV 5	4081	-90	3	-17	-5043	2039	-67849	-928	-887
16933	SLV 13	4078	29	27	231	-3026	11562	-57152	-248	-890

Sollecitazioni con sforzo Fyy massimo

Vengono mostrati i soli 5 gusci più sollecitati.

Shell	Cont.	Nodo	Sollecitazione							
Ind	N.br.	Ind	Mxx	Mxy	Myy	Fxx	Fxy	Fyy	Vx	Vy
16860	SLV 5	6183	157	-142	247	8535	-26060	82278	1456	-892

Shell	Cont.	Nodo	Sollecitazione							
Ind	N.br.	Ind	Mxx	Mxy	Myy	Fxx	Fxy	Fyy	Vx	Vy
17388	SLV Y	4081	97	-29	30	4040	-2708	44174	863	598
16954	SLV Y	3185	-104	-34	-80	11901	-1407	42757	-227	124
1556	SLU 84	3974	43	-37	-48	26108	-37518	38952	-667	317
3641	SLU 83	3381	-131	-209	-74	-24544	-10736	36621	837	1220

1.1.2.4 Sollecitazioni estreme gusci verticali

Shell: elemento guscio a cui si riferiscono le sollecitazioni.
Ind: indice del guscio.
Cont.: contesto a cui si riferiscono le sollecitazioni.
N.br.: nome breve della condizione o combinazione di carico.
Nodo: nodo su cui si basa il guscio a cui si riferisce la sollecitazione.
Ind: indice del nodo.
Sollecitazione: valori della sollecitazione.
*Moo: componente Moo della sollecitazione del guscio nel nodo indicato. [daN*m/m]*
*Moz: componente Moz della sollecitazione del guscio nel nodo indicato. [daN*m/m]*
*Mzz: componente Mzz della sollecitazione del guscio nel nodo indicato. [daN*m/m]*
Foo: componente Foo della sollecitazione del guscio nel nodo indicato. [daN/m]
Foz: componente Foz della sollecitazione del guscio nel nodo indicato. [daN/m]
Fzz: componente Fzz della sollecitazione del guscio nel nodo indicato. [daN/m]
Vo: componente Vo della sollecitazione del guscio nel nodo indicato. [daN/m]
Vz: componente Vz della sollecitazione del guscio nel nodo indicato. [daN/m]

Sollecitazioni con momento Moo minimo

Vengono mostrati i soli 5 gusci più sollecitati.

Shell	Cont.	Nodo	Sollecitazione							
Ind	N.br.	Ind	Moo	Moz	Mzz	Foo	Foz	Fzz	Vo	Vz
2674	SLV 11	3447	-3878	-80	-2417	-16672	11431	-19073	-10283	10462
3018	SLV 7	3406	-3642	-52	629	-13370	-121	-871	9232	7353
2673	SLV 11	3446	-3466	146	625	16956	27742	-18025	-27082	1387
2485	SLV 9	3410	-3188	197	-1747	17198	6909	-39024	4124	9107
3009	SLV 7	3407	-3115	-75	373	14198	-25851	-16057	23441	-857

Sollecitazioni con momento Moo massimo

Vengono mostrati i soli 5 gusci più sollecitati.

Shell	Cont.	Nodo	Sollecitazione							
Ind	N.br.	Ind	Moo	Moz	Mzz	Foo	Foz	Fzz	Vo	Vz
3027	SLV 7	3404	4141	-485	1168	842	-8261	7240	12477	-7135
2675	SLV 11	3449	3954	247	1463	44706	7000	12764	-9847	-7289
3036	SLV 7	3403	3226	-344	633	-1317	-16384	-5717	15972	-3069
2676	SLV 11	3450	3214	-15	717	1020	14682	-4223	-14927	-189
2673	SLV 11	3447	2810	797	-270	-3619	4843	5154	-29793	-2112

Sollecitazioni con momento Mzz minimo

Vengono mostrati i soli 5 gusci più sollecitati.

Shell	Cont.	Nodo	Sollecitazione							
Ind	N.br.	Ind	Moo	Moz	Mzz	Foo	Foz	Fzz	Vo	Vz
3018	SLV 5	3406	1957	-305	-2471	19538	-14261	-25020	-4921	-2906
2674	SLV 11	3447	-3878	-80	-2417	-16672	11431	-19073	-10283	10462
14688	SLV 7	3198	77	-361	-1948	-57137	30242	-64933	-135	6297
2485	SLU 83	3410	-1699	-3	-1948	-5808	20979	-53067	-7897	8228
2994	SLU 84	3410	-973	100	-1832	-18352	-12572	-50932	3806	4693

Sollecitazioni con momento Mzz massimo

Vengono mostrati i soli 5 gusci più sollecitati.

Shell	Cont.	Nodo	Sollecitazione							
Ind	N.br.	Ind	Moo	Moz	Mzz	Foo	Foz	Fzz	Vo	Vz
3388	SLV 11	3199	-347	246	1683	-69232	53940	-45854	2808	-5187
3379	SLV 11	3199	245	-331	1677	-15802	15855	-30057	1373	-4714
3018	SLV Y	3406	-2800	127	1550	-16454	7070	12074	7077	5129
2675	SLV 11	3449	3954	247	1463	44706	7000	12764	-9847	-7289
14688	SLV 9	3198	-176	225	1286	66871	-31855	60540	495	-4180

Sollecitazioni con sforzo Foo minimo

Vengono mostrati i soli 5 gusci più sollecitati.

Shell	Cont.	Nodo	Sollecitazione							
Ind	N.br.	Ind	Moo	Moz	Mzz	Foo	Foz	Fzz	Vo	Vz
5363	SLU 83	4103	35	-32	9	-315396	-71397	-129162	-519	-136
4020	SLU 83	2953	-14	-66	13	-188574	1483	-53157	-244	72
3639	SLU 83	3124	-71	54	-10	-105665	-86476	-100540	346	-452
16761	SLV 9	6647	-83	13	16	-97604	-28097	-57302	-250	-826
3922	SLU 83	3122	-98	-4	-17	-87817	-70732	-77429	487	-428

Sollecitazioni con sforzo Foo massimo

Vengono mostrati i soli 5 gusci più sollecitati.

Shell	Cont.	Nodo	Sollecitazione							
Ind	N.br.	Ind	Moo	Moz	Mzz	Foo	Foz	Fzz	Vo	Vz
5363	SLU 83	3526	27	32	-34	182580	54793	62977	-519	-136
3639	SLU 83	3393	-10	-11	-2	150610	92576	83018	-946	-245
4020	SLU 83	3392	6	-37	-22	136826	13226	49400	-244	72
14691	SLU 83	3208	-106	0	-27	92641	58985	53527	-608	-182
16761	SLV 9	6977	-132	-3	-71	90527	44610	14705	-86	-194

Sollecitazioni con sforzo Fzz minimo

Vengono mostrati i soli 5 gusci più sollecitati.

Shell	Cont.	Nodo	Sollecitazione							
Ind	N.br.	Ind	Moo	Moz	Mzz	Foo	Foz	Fzz	Vo	Vz
16770	SLV 9	6569	-13	-10	-24	969	9712	-242160	-241	43
16776	SLV 7	3197	406	-221	682	-5769	1696	-223936	-4260	2255
16816	SLV 7	16597	34	55	10	-17264	4874	-220665	170	-61
16771	SLV 9	6118	5	-19	-8	-20981	18785	-199590	55	19
16912	SLV 7	16598	-32	-40	-8	-16458	4564	-195565	-277	64

Sollecitazioni con sforzo Fzz massimo

Vengono mostrati i soli 5 gusci più sollecitati.

Shell	Cont.	Nodo	Sollecitazione							
Ind	N.br.	Ind	Moo	Moz	Mzz	Foo	Foz	Fzz	Vo	Vz
16816	SLV 9	16597	-33	-54	-11	15962	-4908	206857	-165	63
16770	SLV Y	6569	18	18	22	-1548	-8699	203861	264	-57
16776	SLV 9	3197	-307	140	-567	13245	12659	203626	2712	-1956
16912	SLV 9	16598	31	41	9	14970	-4514	179123	265	-65
16775	SLV 9	4083	71	-85	115	16702	16922	171722	-457	378

1.1.3 Sollecitazioni gusci armati

1.1.3.1 Convenzioni di segno gusci

Sono individuate distinte convenzioni di segno in relazione al tipo di elemento strutturale a cui il guscio si riferisce:

- convenzione per gusci non verticali, originati ad esempio da piastre e platee;
- convenzione per gusci verticali, originati ad esempio da pareti e muri.

Convenzione di segno per gusci non verticali

Il sistema di riferimento nel quale sono espressi i parametri di sollecitazione è così definito: origine appartenente al piano dell'elemento, asse x e y contenuti nel piano dell'elemento e terzo asse (z) ortogonale al piano dell'elemento a formare una terna destrogira. In particolare l'asse x ha proiezione in pianta parallela ed equiversa all'asse globale X. Nel caso di piastre orizzontali (caso più comune) gli assi x, y e z locali all'elemento sono paralleli ed equiversi agli assi X, Y e Z globali. Si sottolinea che non ha alcun interesse collocare esattamente nel piano dell'elemento la posizione dell'origine in quanto i parametri di sollecitazione sono invarianti rispetto a tale posizione.
In figura è mostrato un elemento infinitesimo di shell orizzontale con indicato il sistema di riferimento e i parametri di sollecitazione Mxx, Myy, Mxy.

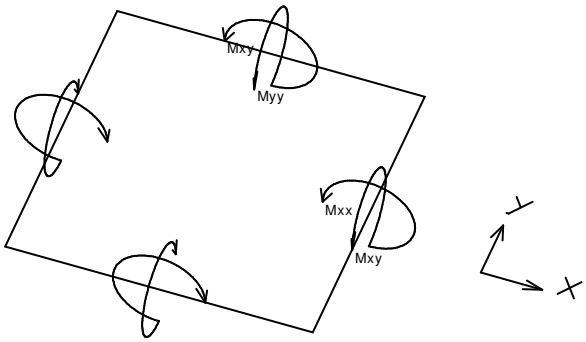

Si definiscono:

- Mxx: momento flettente [Forza*Lunghezza/Lunghezza] agente sul bordo di normale x (verso positivo indicato dalla freccia in figura che tende le fibre inferiori);
- Myy: momento flettente [Forza*Lunghezza/Lunghezza] agente sul bordo di normale y (verso positivo indicato dalla freccia in figura che tende le fibre inferiori);
- Mxy: momento torcente [Forza*Lunghezza/Lunghezza] agente sui bordi (verso positivo indicato dalla freccia in figura).

Per quanto riguarda le sollecitazioni estensionali si faccia riferimento alla figura seguente dove per lo stesso elemento infinitesimo di shell orizzontale con indicato il sistema di riferimento e i parametri di sollecitazione Fxx, Fyy, Fxy.

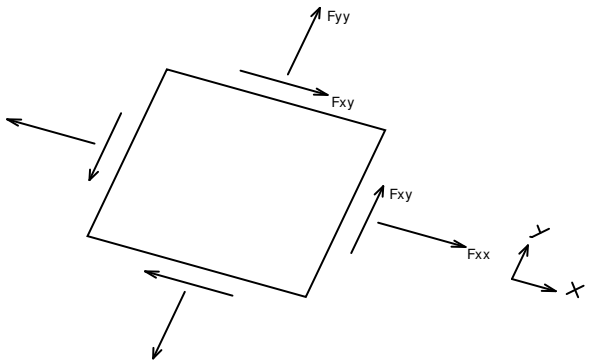

Si definiscono:

- Fxx: sforzo estensionale [Forza/Lunghezza] agente sul bordo di normale x (verso positivo indicato dalla freccia in figura che mette in trazione l'elemento);
- Fyy: sforzo estensionale [Forza/Lunghezza] agente sul bordo di normale all'asse y (verso positivo indicato dalla freccia in figura che mette in trazione l'elemento);
- Fxy: sforzo di taglio [Forza/Lunghezza] agente sui bordi (verso positivo indicato dalla freccia in figura).

Vengono riportati inoltre i tagli fuori dal piano dell'elemento guscio:

- Vx: taglio fuori piano [Forza/Lunghezza] applicato al bordo di normale parallela all'asse x;
- Vy: taglio fuori piano [Forza/Lunghezza] applicato al bordo di normale parallela all'asse y.

Convenzione di segno per gusci verticali

Il sistema di riferimento nel quale sono espressi i parametri di sollecitazione è così definito: origine appartenente al piano dell'elemento, asse O (ascisse) e z (ordinate) contenuti nel piano dell'elemento e terzo asse ortogonale al piano dell'elemento a formare una terna destrogira. In particolare l'asse O è orizzontale e l'asse z parallelo ed equiverso con l'asse Z globale. Si sottolinea che non ha alcun interesse collocare esattamente nel piano dell'elemento la posizione dell'origine in quanto i parametri di sollecitazione sono invarianti rispetto a tale posizione.In figura è mostrato un elemento infinitesimo di shell orizzontale con indicato il sistema di riferimento e i parametri di sollecitazione Moo, Mzz, Moz.

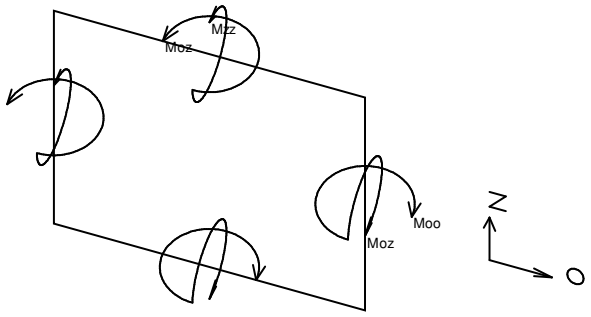

- Moo: momento flettente distribuito [Forza*Lunghezza/Lunghezza] applicato al bordo di normale parallela all'asse O (verso positivo indicato dalla freccia in figura che tende le fibre inferiori);
- Mzz: momento flettente distribuito [Forza*Lunghezza/Lunghezza] applicato al bordo di normale parallela all'asse z (verso positivo indicato dalla freccia in figura che tende le fibre inferiori);
- Moz: momento 'torcente' distribuito [Forza*Lunghezza/Lunghezza] applicato sui bordi (verso positivo indicato dalla freccia in figura).

Per quanto riguarda le sollecitazioni estensionali si faccia riferimento alla figura seguente dove per lo stesso elemento infinitesimo di shell con indicato il sistema di riferimento i parametri di sollecitazione Foo, Fzz, Foz sono rispettivamente:

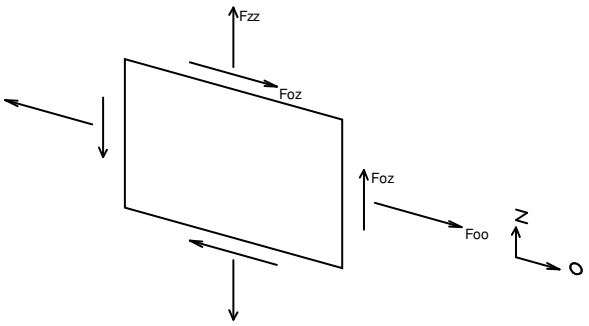

- Fzz: sforzo tensionale distribuito [Forza/Lunghezza] applicato al bordo di normale parallela all'asse z (verso positivo indicato dalla freccia in figura che mette in trazione l'elemento);
- Foo: sforzo tensionale distribuito [Forza/Lunghezza] applicato al bordo di normale parallela all'asse O (verso positivo indicato dalla freccia in figura che mette in trazione l'elemento);
- Foz: sforzo tagliante distribuito [Forza/Lunghezza] applicato sui bordi (verso positivo indicato dalla freccia in figura).

Vengono riportati inoltre i tagli fuori dal piano dell'elemento guscio:

- Vo: taglio fuori piano applicato al bordo di normale parallela all'asse O;
- Vz: taglio fuori piano applicato al bordo di normale parallela all'asse z.

1.1.4 Sollecitazioni gusci muratura

1.1.4.1 Convenzioni di segno gusci muratura

Sono individuate distinte convenzioni di segno in relazione al tipo di elemento strutturale a cui il guscio muratura si riferisce:

- convenzione per gusci non verticali, originati ad esempio da piastre e platee;
- convenzione per gusci verticali, originati ad esempio da pareti e muri.

Convenzione di segno per gusci non verticali

Il sistema di riferimento nel quale sono espressi i parametri di sollecitazione è così definito: origine appartenente al piano dell'elemento, asse x e y contenuti nel piano dell'elemento e terzo asse (z) ortogonale al piano dell'elemento a formare una terna destrogira. In particolare l'asse x ha proiezione in pianta parallela ed equiversa all'asse globale X. Nel caso di piastre orizzontali (caso più comune) gli assi x, y e z locali all'elemento sono paralleli ed equiversi agli assi X, Y e Z globali. Si sottolinea che non ha alcun interesse collocare esattamente nel piano dell'elemento la posizione dell'origine in quanto i parametri di sollecitazione sono invarianti rispetto a tale posizione.
In figura è mostrato un elemento infinitesimo di shell orizzontale con indicato il sistema di riferimento e i parametri di sollecitazione Mxx, Myy, Mxy.

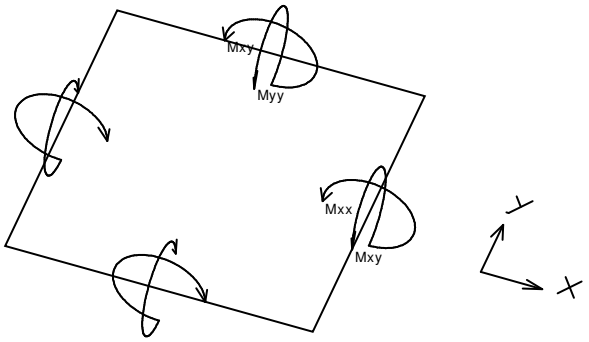

Si definiscono:

- Mxx: momento flettente [Forza*Lunghezza/Lunghezza] agente sul bordo di normale x (verso positivo indicato dalla freccia in figura che tende le fibre inferiori);
- Myy: momento flettente [Forza*Lunghezza/Lunghezza] agente sul bordo di normale y (verso positivo indicato dalla freccia in figura che tende le fibre inferiori);
- Mxy: momento torcente [Forza*Lunghezza/Lunghezza] agente sui bordi (verso positivo indicato dalla freccia in figura).

Per quanto riguarda le sollecitazioni estensionali si faccia riferimento alla figura seguente dove per lo stesso elemento infinitesimo di shell orizzontale con indicato il sistema di riferimento e i parametri di sollecitazione Fxx, Fyy, Fxy.

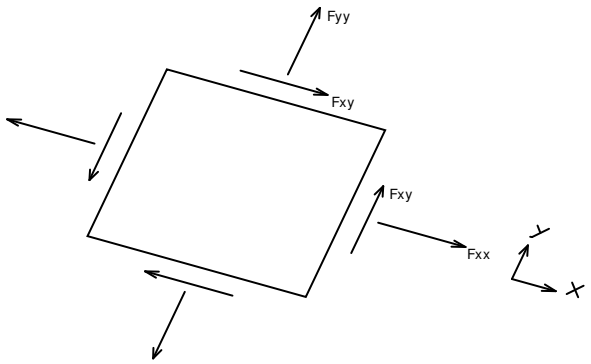

Si definiscono:

- Fxx: sforzo tensionale [Forza/Lunghezza] agente sul bordo di normale x (verso positivo indicato dalla freccia in figura che mette in trazione l'elemento);
- Fyy: sforzo tensionale [Forza/Lunghezza] agente sul bordo di normale all'asse y (verso positivo indicato dalla freccia in figura che mette in trazione l'elemento);
- Fxy: sforzo tagliante [Forza/Lunghezza] agente sui bordi (verso positivo indicato dalla freccia in figura).

Convenzione di segno per gusci verticali

Il sistema di riferimento nel quale sono espressi i parametri di sollecitazione è così definito: origine appartenente al piano dell'elemento, asse O (ascisse) e z (ordinate) contenuti nel piano dell'elemento e terzo asse ortogonale al piano dell'elemento a formare una terna destrogira. In particolare l'asse O è orizzontale e l'asse z parallelo ed equiverso con l'asse Z globale. Si sottolinea che non ha alcun interesse collocare esattamente nel piano dell'elemento la posizione dell'origine in quanto i parametri di sollecitazione sono invarianti rispetto a tale posizione.In figura è mostrato un elemento infinitesimo di shell orizzontale con indicato il sistema di riferimento e i parametri di sollecitazione Moo, Mzz, Moz.

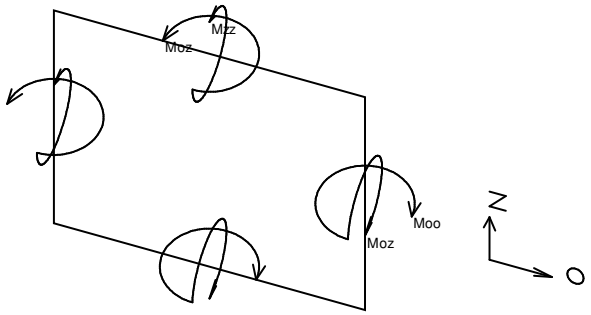

- Moo: momento flettente distribuito [Forza*Lunghezza/Lunghezza] applicato al bordo di normale parallela all'asse O (verso positivo indicato dalla freccia in figura che tende le fibre inferiori);
- Mzz: momento flettente distribuito [Forza*Lunghezza/Lunghezza] applicato al bordo di normale parallela all'asse z (verso positivo indicato dalla freccia in figura che tende le fibre inferiori);
- Moz: momento 'torcente' distribuito [Forza*Lunghezza/Lunghezza] applicato sui bordi (verso positivo indicato dalla freccia in figura).

Per quanto riguarda le sollecitazioni estensionali si faccia riferimento alla figura seguente dove per lo stesso elemento infinitesimo di shell con indicato il sistema di riferimento i parametri di sollecitazione Foo, Fzz, Foz sono rispettivamente:

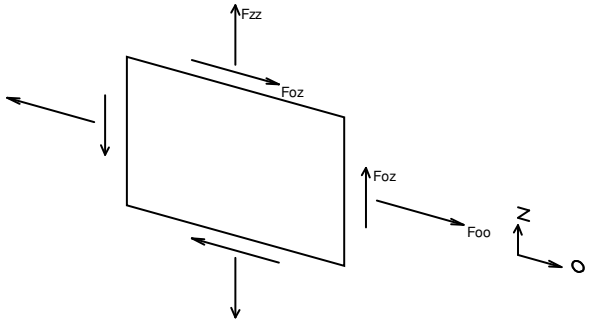

- Fzz: sforzo tensionale distribuito [Forza/Lunghezza] applicato al bordo di normale parallela all'asse z (verso positivo indicato dalla freccia in figura che mette in trazione l'elemento);

- Foo: sforzo tensionale distribuito [Forza/Lunghezza] applicato al bordo di normale parallela all'asse O (verso positivo indicato dalla freccia in figura che mette in trazione l'elemento);
- Foz: sforzo tagliante distribuito [Forza/Lunghezza] applicato sui bordi (verso positivo indicato dalla freccia in figura).

1.1.5 Sollecitazioni aste in muratura

1.1.5.1 Convenzioni di segno aste

Le abbreviazioni relative alle sollecitazioni sugli elementi aste sono da intendersi:

- F1 (N): sforzo normale nell'asta;
- F2: sforzo di taglio agente nella direzione dell'asse locale 2;
- F3: sforzo di taglio agente nella direzione dell'asse locale 3;
- M1 (Mt): momento attorno all'asse locale 1; equivale al momento torcente;
- M2: momento attorno all'asse locale 2;
- M3: momento attorno all'asse locale 3.

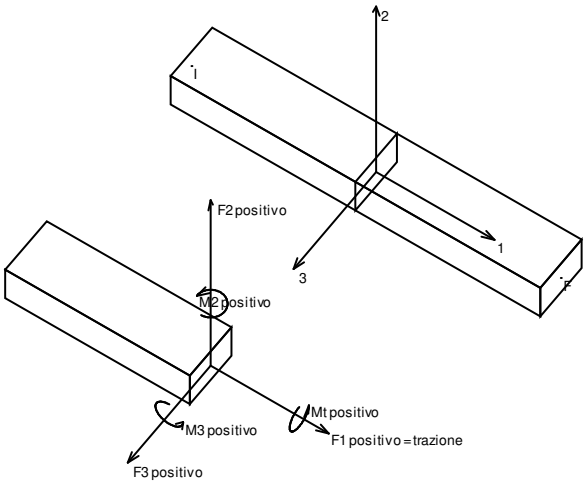

La convenzione sui segni per i parametri di sollecitazione delle aste è la seguente:
presa un'asta con nodo iniziale i e nodo finale f, asse 1 che va da i a f, assi 2 e 3 presi secondo quanto indicato nei paragrafi successivi relativi al sistema locale delle aste sezionando l'asta in un punto e considerando la sezione sinistra del punto in cui si è effettuato il taglio (sezione da cui esce il versore asse 1) i parametri di sollecitazione sono positivi se hanno verso e direzione concordi con il sistema di riferimento locale dell'asta 1, 2, 3 (per i momenti si adotta la regola della mano destra).

Il sistema è definito diversamente per tre categorie di aste, a seconda che siano originate da:

- aste verticali ad esempio pilastri e colonne;
- aste non verticali non di c.a., ad esempio travi di acciaio o legno;
- aste non verticali in c.a.: travi in c.a. di piano, falda o a quota generica.

Nel seguito si indica con 1, 2 e 3 il sistema locale dell'asta che non sempre coincide con gli assi principali della sezione. Si ricorda che per assi principali si intendono gli assi rispetto a cui si ha il raggio di inerzia minimo e massimo. Gli assi 1, 2 e 3 rispettano la regola della mano destra.

Sistema locale aste verticali

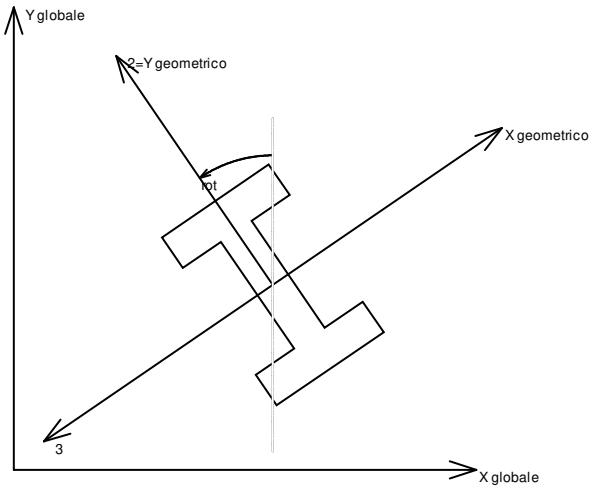

Nella figura si considera l'asse 1 uscente dal foglio (l'osservatore guarda in direzione opposta a quella dell'asse 1).

Sistema locale aste non verticali

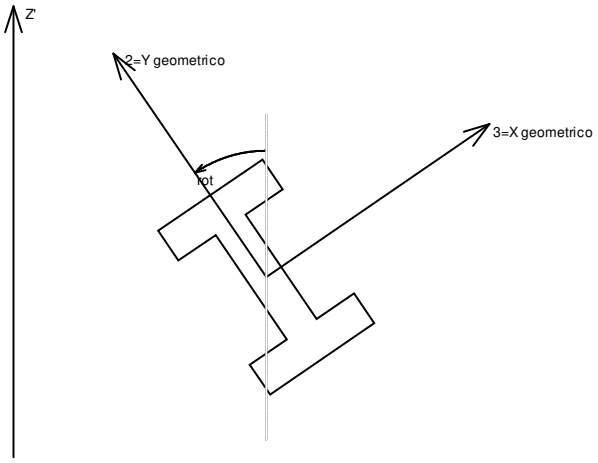

Nella figura si considera l'asse 1 entrante nel foglio (l'osservatore guarda in direzione coincidente a quella dell'asse 1).

L'asse Z' è illustrato nella figura seguente dove:

- P1 è il punto di inserimento iniziale dell'asta;
- P2 è il punto di inserimento finale dell'asta;
- N è la normale al piano o falda di inserimento;

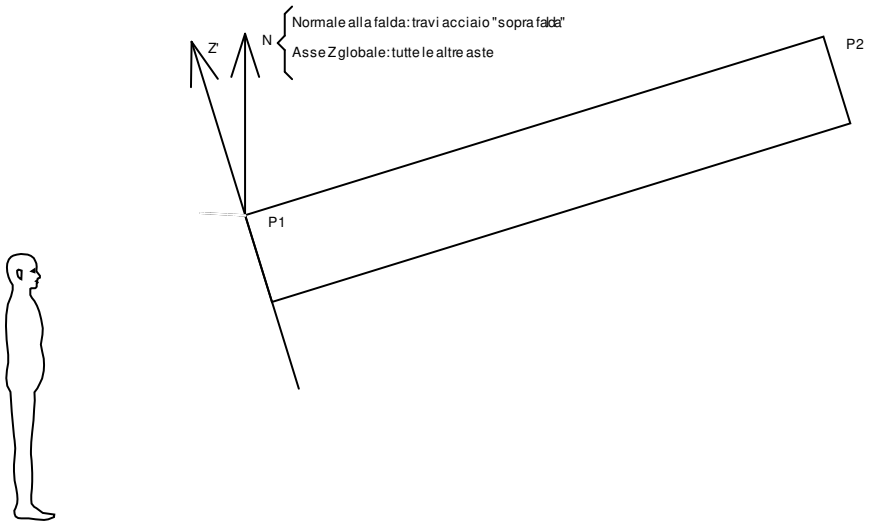

Z' è quindi l'intersezione tra il piano passante per P1, P2 contenente N e il piano della sezione iniziale dell'asta.

Sistema locale aste derivanti da travi in c.a.

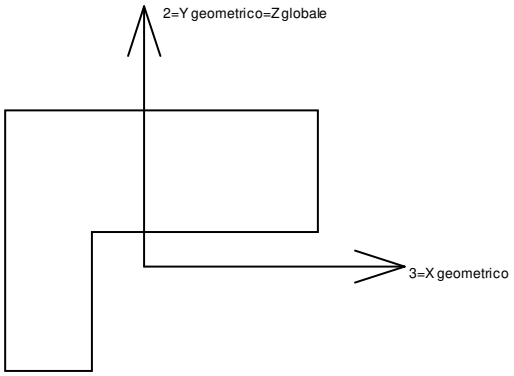

Nella figura si considera l'asse 1 entrante nel foglio (l'osservatore guarda in direzione coincidente a quella dell'asse 1). L'asse 2 è sempre verticale e quindi coincidente con l'asse Z globale nonché con l'asse y geometrico. L'asse 3 coincide con l'asse x geometrico. . Si sottolinea il fatto che gli assi 2 e 3 non corrispondono agli assi principali della sezione.

1.1.6 Sollecitazioni aste in muratura FRCM

1.1.6.1 Convenzioni di segno aste

Le abbreviazioni relative alle sollecitazioni sugli elementi aste sono da intendersi:

- F1 (N): sforzo normale nell'asta;
- F2: sforzo di taglio agente nella direzione dell'asse locale 2;
- F3: sforzo di taglio agente nella direzione dell'asse locale 3;
- M1 (Mt): momento attorno all'asse locale 1; equivale al momento torcente;
- M2: momento attorno all'asse locale 2;
- M3: momento attorno all'asse locale 3.

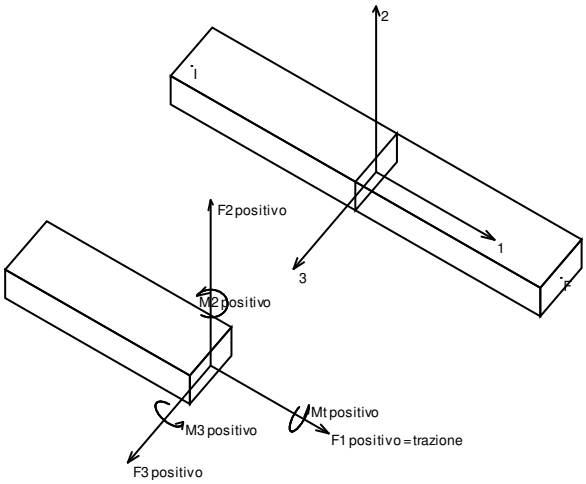

La convenzione sui segni per i parametri di sollecitazione delle aste è la seguente:
presa un'asta con nodo iniziale i e nodo finale f, asse 1 che va da i a f, assi 2 e 3 presi secondo quanto indicato nei paragrafi successivi relativi al sistema locale delle aste sezionando l'asta in un punto e considerando la sezione sinistra del punto in cui si è effettuato il taglio (sezione da cui esce il versore asse 1) i parametri di sollecitazione sono positivi se hanno verso e direzione concordi con il sistema di riferimento locale dell'asta 1, 2, 3 (per i momenti si adotta la regola della mano destra).

Il sistema è definito diversamente per tre categorie di aste, a seconda che siano originate da:

- aste verticali ad esempio pilastri e colonne;
- aste non verticali non di c.a., ad esempio travi di acciaio o legno;
- aste non verticali in c.a.: travi in c.a. di piano, falda o a quota generica.

Nel seguito si indica con 1, 2 e 3 il sistema locale dell'asta che non sempre coincide con gli assi principali della sezione. Si ricorda che per assi principali si intendono gli assi rispetto a cui si ha il raggio di inerzia minimo e massimo. Gli assi 1, 2 e 3 rispettano la regola della mano destra.

Sistema locale aste verticali

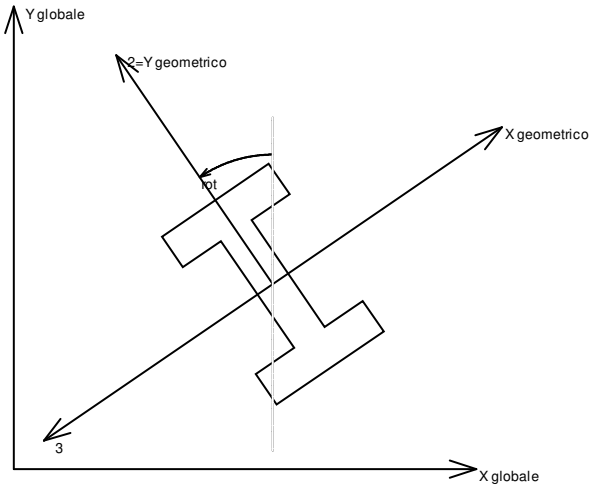

Nella figura si considera l'asse 1 uscente dal foglio (l'osservatore guarda in direzione opposta a quella dell'asse 1).

Sistema locale aste non verticali

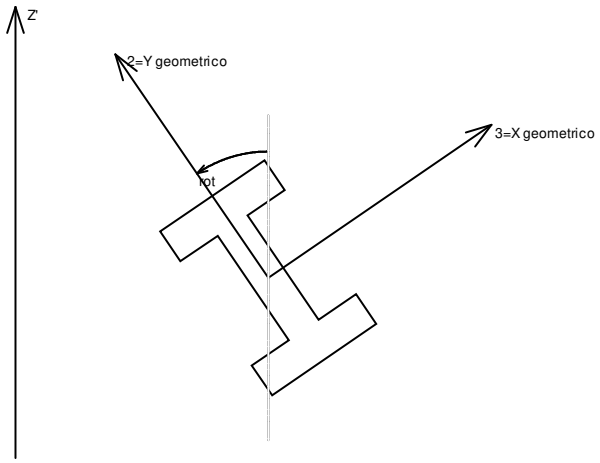

Nella figura si considera l'asse 1 entrante nel foglio (l'osservatore guarda in direzione coincidente a quella dell'asse 1).

L'asse Z' è illustrato nella figura seguente dove:

- P1 è il punto di inserimento iniziale dell'asta;
- P2 è il punto di inserimento finale dell'asta;
- N è la normale al piano o falda di inserimento;

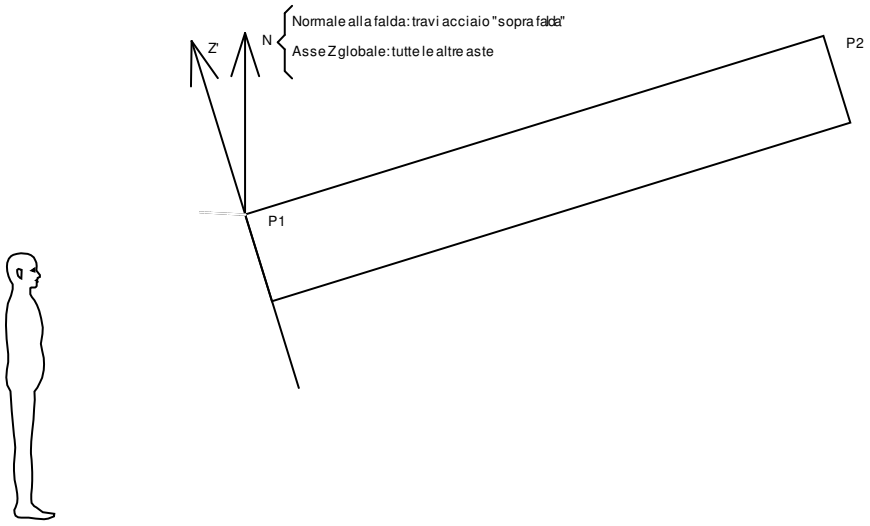

Z' è quindi l'intersezione tra il piano passante per P1, P2 contenente N e il piano della sezione iniziale dell'asta.

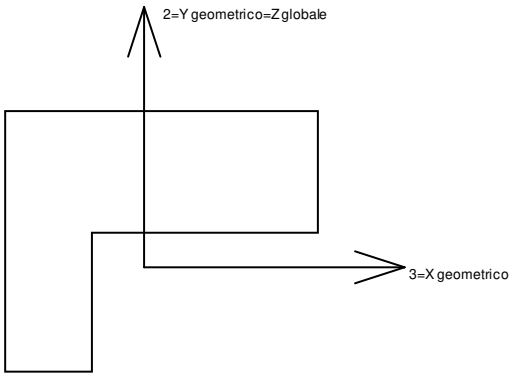

Nella figura si considera l'asse 1 entrante nel foglio (l'osservatore guarda in direzione coincidente a quella dell'asse 1). L'asse 2 è sempre verticale e quindi coincidente con l'asse Z globale nonché con l'asse y geometrico. L'asse 3 coincide con l'asse x geometrico. . Si sottolinea il fatto che gli assi 2 e 3 non corrispondono agli assi principali della sezione.

1.1.7 Sollecitazioni aste in muratura armata

1.1.7.1 Convenzioni di segno aste

Le abbreviazioni relative alle sollecitazioni sugli elementi aste sono da intendersi:

- F1 (N): sforzo normale nell'asta;
- F2: sforzo di taglio agente nella direzione dell'asse locale 2;
- F3: sforzo di taglio agente nella direzione dell'asse locale 3;
- M1 (Mt): momento attorno all'asse locale 1; equivale al momento torcente;
- M2: momento attorno all'asse locale 2;
- M3: momento attorno all'asse locale 3.

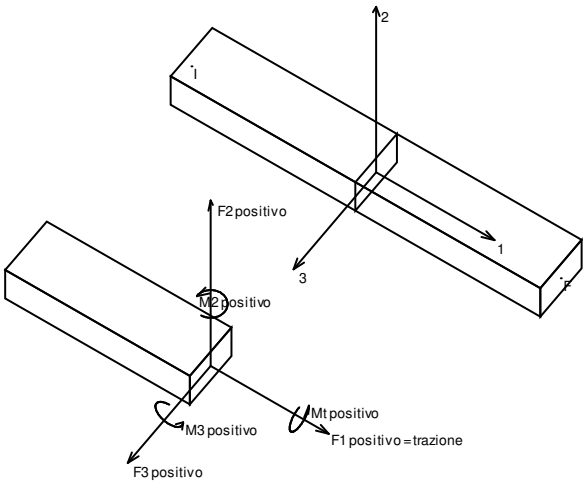

La convenzione sui segni per i parametri di sollecitazione delle aste è la seguente:
presa un'asta con nodo iniziale i e nodo finale f, asse 1 che va da i a f, assi 2 e 3 presi secondo quanto indicato nei paragrafi successivi relativi al sistema locale delle aste sezionando l'asta in un punto e considerando la sezione sinistra del punto in cui si è effettuato il taglio (sezione da cui esce il versore asse 1) i parametri di sollecitazione sono positivi se hanno verso e direzione concordi con il sistema di riferimento locale dell'asta 1, 2, 3 (per i momenti si adotta la regola della mano destra).

Il sistema è definito diversamente per tre categorie di aste, a seconda che siano originate da:

- aste verticali ad esempio pilastri e colonne;
- aste non verticali non di c.a., ad esempio travi di acciaio o legno;
- aste non verticali in c.a.: travi in c.a. di piano, falda o a quota generica.

Nel seguito si indica con 1, 2 e 3 il sistema locale dell'asta che non sempre coincide con gli assi principali della sezione. Si ricorda che per assi principali si intendono gli assi rispetto a cui si ha il raggio di inerzia minimo e massimo. Gli assi 1, 2 e 3 rispettano la regola della mano destra.

Sistema locale aste verticali

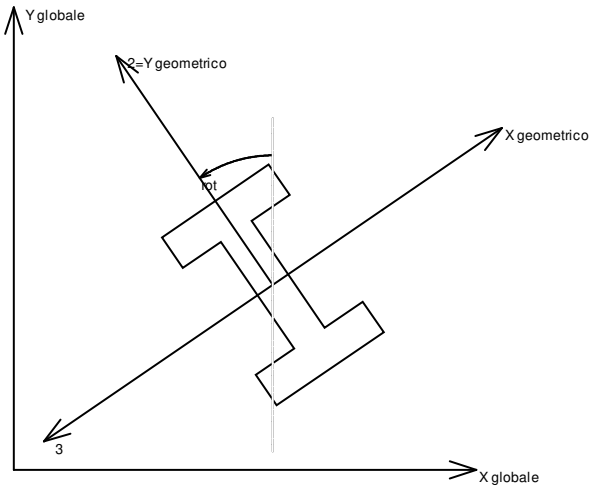

Nella figura si considera l'asse 1 uscente dal foglio (l'osservatore guarda in direzione opposta a quella dell'asse 1).

Sistema locale aste non verticali

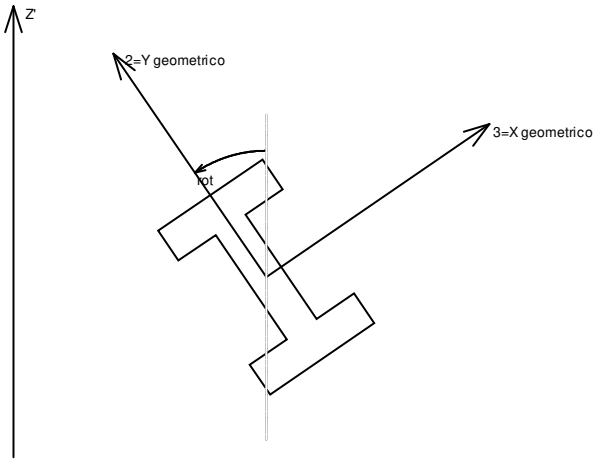

Nella figura si considera l'asse 1 entrante nel foglio (l'osservatore guarda in direzione coincidente a quella dell'asse 1).

L'asse Z' è illustrato nella figura seguente dove:

- P1 è il punto di inserimento iniziale dell'asta;
- P2 è il punto di inserimento finale dell'asta;
- N è la normale al piano o falda di inserimento;

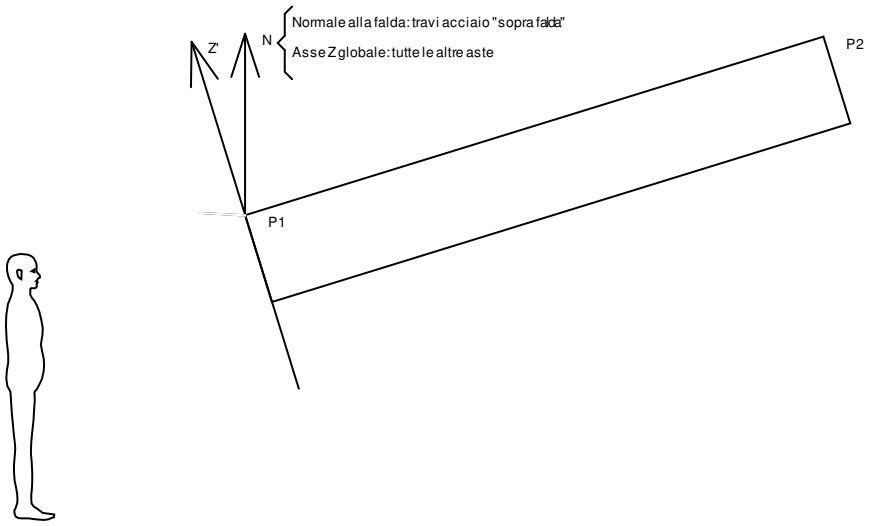

Z' è quindi l'intersezione tra il piano passante per P1, P2 contenente N e il piano della sezione iniziale dell'asta.

Sistema locale aste derivanti da travi in c.a.

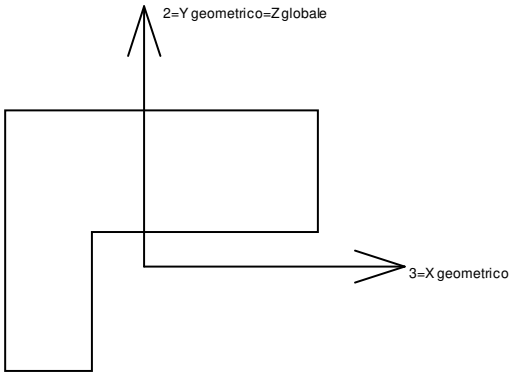

Nella figura si considera l'asse 1 entrante nel foglio (l'osservatore guarda in direzione coincidente a quella dell'asse 1). L'asse 2 è sempre verticale e quindi coincidente con l'asse Z globale nonché con l'asse y geometrico. L'asse 3 coincide con l'asse x geometrico. . Si sottolinea il fatto che gli assi 2 e 3 non corrispondono agli assi principali della sezione.

1.2 Reazioni nodali

1.2.1 Reazioni nodali estreme

Nodo: Nodo sollecitato dalla reazione vincolare.
Ind.: indice del nodo.
Cont.: Contesto a cui si riferisce la reazione vincolare.
N.br.: nome breve della condizione o combinazione di carico.
Reazione a traslazione: reazione vincolare traslazionale del nodo.
x: componente X della reazione vincolare del nodo. [daN]
y: componente Y della reazione vincolare del nodo. [daN]
z: componente Z della reazione vincolare del nodo. [daN]
Reazione a rotazione: reazione vincolare rotazionale del nodo.
*x: componente X della reazione a rotazione del nodo. [daN*m]*
*y: componente Y della reazione a rotazione del nodo. [daN*m]*
*z: componente Z della reazione a rotazione del nodo. [daN*m]*

Reazioni Fx minime

Vengono mostrati i soli 5 nodi più sollecitati.

Nodo	Cont.	Reazione a traslazione			Reazione a rotazione		
Ind.	N.br.	x	y	z	x	y	z
215	SLV 15	-3646	-15	2638	17.26	-124.54	0.09

Nodo	Cont.	Reazione a traslazione			Reazione a rotazione		
Ind.	N.br.	x	y	z	x	y	z
216	SLV 15	-3631	-21	3234	23.35	-118.86	0.09
217	SLV 15	-3529	-23	3198	26.58	-114.53	0.09
214	SLV 15	-3448	-7	2354	8.39	-120.69	0.04
218	SLV 15	-3325	-23	3473	27.03	-104.26	0.09

Reazioni Fx massime

Vengono mostrati i soli 5 nodi più sollecitati.

Nodo	Cont.	Reazione a traslazione			Reazione a rotazione		
Ind.	N.br.	x	y	z	x	y	z
178	SLV 3	4060	-1104	14008	27.2	-551.4	-160.93
172	SLV 1	3954	65	3900	-60.15	147.67	0.23
173	SLV 1	3857	63	3291	-59.39	137.34	0.21
171	SLV 1	3729	64	4044	-58.3	131.21	0.23
174	SLV 1	3728	59	2893	-56.61	142.35	0.17

Reazioni Fy minime

Vengono mostrati i soli 5 nodi più sollecitati.

Nodo	Cont.	Reazione a traslazione			Reazione a rotazione		
Ind.	N.br.	x	y	z	x	y	z
190	SLV 11	-645	-3485	18920	85.49	-11.59	0.84
159	SLV 11	8	-3352	8674	152.9	-1.88	0
290	SLV 7	58	-3249	12288	233.55	36.25	0.26
145	SLV 11	1	-3008	7382	129.3	-2.15	-0.01
326	SLV 11	5	-2919	7270	127.92	-4.15	0.01

Reazioni Fy massime

Vengono mostrati i soli 5 nodi più sollecitati.

Nodo	Cont.	Reazione a traslazione			Reazione a rotazione		
Ind.	N.br.	x	y	z	x	y	z
30	SLV 5	-18	3232	8016	-116.55	10.05	0.02
105	SLV 9	36	3222	10795	-189.54	14.03	0.04
41	SLV 5	1595	3102	15146	-132.35	51.23	0.51
101	SLV 5	-23	3054	11014	-141	42.43	0.19
91	SLV 9	-1690	3023	14388	-122.73	1789.62	-699.33

Reazioni Fz minime

Vengono mostrati i soli 5 nodi più sollecitati.

Nodo	Cont.	Reazione a traslazione			Reazione a rotazione		
Ind.	N.br.	x	y	z	x	y	z
164	SLV X	-1427	-140	-7874	5.63	-50.43	-0.03
11	SLV Y	-172	-1567	-6561	49	-6.6	0.43
18	SLV Y	150	-1188	-6354	40.09	6.35	-0.04
178	SLV X	-2310	262	-6027	-8.91	125.06	39.11
297	SLV X	-932	766	-5752	-19.64	-33.87	-0.31

Reazioni Fz massime

Vengono mostrati i soli 5 nodi più sollecitati.

Nodo	Cont.	Reazione a traslazione			Reazione a rotazione		
Ind.	N.br.	x	y	z	x	y	z
164	SLV 1	2930	584	20660	-25.52	98.1	0.11
224	SLV 13	-2764	603	18954	-35.57	-112.94	-0.21
190	SLV 11	-645	-3485	18920	85.49	-11.59	0.84
325	SLV 15	-1964	-1653	17890	111.75	-63.33	6.04
335	SLV 7	1994	-2155	16225	64.83	63.92	-0.47

1.2.2 Reazioni nodali in combinazioni di carico

Nodo: *Nodo sollecitato dalla reazione vincolare.*
Ind.: *indice del nodo.*
Cont.: *Contesto a cui si riferisce la reazione vincolare.*
N.br.: *nome breve della condizione o combinazione di carico.*
Reazione a traslazione: *reazione vincolare traslazionale del nodo.*
x: *componente X della reazione vincolare del nodo. [daN]*
y: *componente Y della reazione vincolare del nodo. [daN]*
z: *componente Z della reazione vincolare del nodo. [daN]*
Reazione a rotazione: *reazione vincolare rotazionale del nodo.*
x: *componente X della reazione a rotazione del nodo. [daN*m]*
y: *componente Y della reazione a rotazione del nodo. [daN*m]*
z: *componente Z della reazione a rotazione del nodo. [daN*m]*

Nodo	Cont.	Reazione a traslazione			Reazione a rotazione		
Ind.	N.br.	x	y	z	x	y	z
2	SLU 1	553	432	2804	-18.22	16	-0.15
2	SLU 2	520	374	2451	-17.06	15.41	-0.18
2	SLU 3	557	439	2832	-18.59	16.14	-0.15
2	SLU 4	538	404	2620	-17.89	15.78	-0.17
2	SLU 5	523	379	2476	-17.3	15.48	-0.18
2	SLU 6	561	443	2856	-18.82	16.21	-0.15
2	SLU 7	541	408	2645	-18.12	15.85	-0.17
2	SLU 8	559	441	2853	-18.69	16.15	-0.15
2	SLU 9	539	406	2641	-17.99	15.79	-0.17
2	SLU 10	575	420	2678	-19.26	17.14	-0.19
2	SLU 11	613	485	3058	-20.78	17.88	-0.17

Nodo	Cont.	Reazione a traslazione			Reazione a rotazione		
Ind.	N.br.	x	y	z	x	y	z
2	SLU 12	593	450	2847	-20.09	17.52	-0.19
2	SLU 13	578	425	2702	-19.49	17.22	-0.2
2	SLU 14	616	489	3083	-21.02	17.95	-0.17
2	SLU 15	596	454	2871	-20.32	17.59	-0.19
2	SLU 16	614	487	3079	-20.89	17.89	-0.17
2	SLU 17	595	452	2867	-20.19	17.53	-0.19
2	SLU 18	632	498	3128	-21.36	18.49	-0.18
2	SLU 19	612	463	2916	-20.67	18.13	-0.19
2	SLU 20	635	502	3152	-21.6	18.56	-0.18
2	SLU 21	615	468	2940	-20.9	18.2	-0.19
2	SLU 22	593	472	2981	-20.17	17.27	-0.17
2	SLU 23	560	414	2628	-19.01	16.67	-0.19
2	SLU 24	598	478	3008	-20.54	17.4	-0.17
2	SLU 25	578	443	2796	-19.84	17.04	-0.18
2	SLU 26	563	418	2652	-19.25	16.74	-0.19
2	SLU 27	601	483	3032	-20.77	17.47	-0.17
2	SLU 28	581	448	2821	-20.08	17.11	-0.18
2	SLU 29	600	481	3029	-20.64	17.41	-0.17
2	SLU 30	580	446	2817	-19.95	17.05	-0.18
2	SLU 31	616	460	2854	-21.21	18.4	-0.21
2	SLU 32	653	524	3235	-22.74	19.14	-0.19
2	SLU 33	634	489	3023	-22.04	18.78	-0.2
2	SLU 34	619	464	2878	-21.45	18.48	-0.21
2	SLU 35	656	529	3259	-22.97	19.21	-0.19
2	SLU 36	637	494	3047	-22.27	18.85	-0.2
2	SLU 37	655	527	3255	-22.84	19.15	-0.19
2	SLU 38	635	492	3043	-22.14	18.79	-0.2
2	SLU 39	672	537	3304	-23.31	19.75	-0.19
2	SLU 40	652	502	3092	-22.62	19.39	-0.21
2	SLU 41	675	542	3328	-23.55	19.82	-0.19
2	SLU 42	656	507	3116	-22.85	19.46	-0.21
2	SLU 43	705	548	3585	-23.02	20.37	-0.19
2	SLU 44	672	490	3232	-21.86	19.77	-0.22
2	SLU 45	709	555	3613	-23.38	20.51	-0.19
2	SLU 46	690	520	3401	-22.69	20.15	-0.21
2	SLU 47	675	495	3257	-22.09	19.85	-0.22
2	SLU 48	713	559	3637	-23.62	20.58	-0.19
2	SLU 49	693	525	3425	-22.92	20.22	-0.21
2	SLU 50	711	557	3634	-23.49	20.52	-0.19
2	SLU 51	691	523	3422	-22.79	20.16	-0.21
2	SLU 52	727	536	3459	-24.06	21.51	-0.24
2	SLU 53	765	601	3839	-25.58	22.25	-0.21
2	SLU 54	745	566	3628	-24.88	21.89	-0.23
2	SLU 55	730	541	3483	-24.29	21.58	-0.24
2	SLU 56	768	605	3864	-25.81	22.32	-0.21
2	SLU 57	748	571	3652	-25.12	21.96	-0.23
2	SLU 58	766	603	3860	-25.68	22.25	-0.21
2	SLU 59	746	569	3648	-24.99	21.9	-0.23
2	SLU 60	783	614	3909	-26.16	22.86	-0.22
2	SLU 61	764	579	3697	-25.46	22.5	-0.23
2	SLU 62	787	618	3933	-26.39	22.93	-0.22
2	SLU 63	767	584	3721	-25.7	22.57	-0.23
2	SLU 64	745	588	3761	-24.97	21.63	-0.21
2	SLU 65	712	530	3408	-23.81	21.04	-0.23
2	SLU 66	750	594	3789	-25.34	21.77	-0.21
2	SLU 67	730	559	3577	-24.64	21.41	-0.22
2	SLU 68	715	534	3433	-24.04	21.11	-0.23
2	SLU 69	753	599	3813	-25.57	21.84	-0.21
2	SLU 70	733	564	3602	-24.87	21.48	-0.22
2	SLU 71	751	597	3810	-25.44	21.78	-0.21
2	SLU 72	732	562	3598	-24.74	21.42	-0.22
2	SLU 73	767	576	3635	-26.01	22.77	-0.25
2	SLU 74	805	640	4015	-27.53	23.51	-0.23
2	SLU 75	785	605	3804	-26.84	23.15	-0.24
2	SLU 76	771	580	3659	-26.24	22.85	-0.25
2	SLU 77	808	645	4040	-27.77	23.58	-0.23
2	SLU 78	789	610	3828	-27.07	23.22	-0.24
2	SLU 79	807	643	4036	-27.64	23.52	-0.23
2	SLU 80	787	608	3824	-26.94	23.16	-0.24
2	SLU 81	824	653	4085	-28.11	24.12	-0.23
2	SLU 82	804	619	3873	-27.41	23.76	-0.25
2	SLU 83	827	658	4109	-28.34	24.19	-0.23
2	SLU 84	807	623	3897	-27.65	23.83	-0.25
2	SLE RA 1	564	443	2855	-18.78	16.36	-0.16
2	SLE RA 2	542	405	2619	-18.01	15.97	-0.17
2	SLE RA 3	567	448	2873	-19.02	16.45	-0.16
2	SLE RA 4	554	425	2732	-18.56	16.21	-0.17
2	SLE RA 5	544	408	2636	-18.16	16.01	-0.17
2	SLE RA 6	570	451	2889	-19.18	16.5	-0.16
2	SLE RA 7	556	428	2748	-18.71	16.26	-0.17
2	SLE RA 8	569	449	2887	-19.09	16.46	-0.16
2	SLE RA 9	555	426	2746	-18.63	16.22	-0.17
2	SLE RA 10	579	435	2770	-19.47	17.12	-0.18
2	SLE RA 11	604	478	3024	-20.49	17.61	-0.17
2	SLE RA 12	591	455	2883	-20.02	17.37	-0.18
2	SLE RA 13	581	438	2786	-19.63	17.17	-0.19
2	SLE RA 14	606	481	3040	-20.64	17.66	-0.17
2	SLE RA 15	593	458	2899	-20.18	17.42	-0.18
2	SLE RA 16	605	480	3038	-20.56	17.62	-0.17
2	SLE RA 17	592	457	2897	-20.09	17.38	-0.18

Nodo	Cont.	Reazione a traslazione			Reazione a rotazione		
Ind.	N.br.	x	y	z	x	y	z
2	SLE RA 18	617	487	3070	-20.87	18.02	-0.17
2	SLE RA 19	604	464	2929	-20.41	17.78	-0.18
2	SLE RA 20	619	490	3086	-21.03	18.07	-0.17
2	SLE RA 21	606	467	2945	-20.56	17.83	-0.18
2	SLE FR 1	564	443	2855	-18.78	16.36	-0.16
2	SLE FR 2	560	436	2808	-18.62	16.28	-0.16
2	SLE FR 3	565	445	2861	-18.84	16.38	-0.16
2	SLE FR 4	576	449	2872	-19.25	16.78	-0.16
2	SLE FR 5	581	458	2926	-19.47	16.88	-0.16
2	SLE FR 6	591	465	2963	-19.83	17.19	-0.16
2	SLE QP 1	564	443	2855	-18.78	16.36	-0.16
2	SLE QP 2	580	457	2919	-19.41	16.86	-0.16
2	SLD 1	910	652	4591	-25.36	27.06	-0.31
2	SLD 2	910	652	4591	-25.36	27.06	-0.31
2	SLD 3	811	424	3690	-17.65	24.01	-0.2
2	SLD 4	811	424	3690	-17.65	24.01	-0.2
2	SLD 5	829	862	4789	-32.88	24.56	-0.37
2	SLD 6	829	862	4789	-32.88	24.56	-0.37
2	SLD 7	499	100	1783	-7.19	14.37	-0.01
2	SLD 8	499	100	1783	-7.19	14.37	-0.01
2	SLD 9	661	813	4056	-31.63	19.35	-0.31
2	SLD 10	661	813	4056	-31.63	19.35	-0.31
2	SLD 11	331	51	1050	-5.93	9.17	0.05
2	SLD 12	331	51	1050	-5.93	9.17	0.05
2	SLD 13	350	489	2149	-21.17	9.72	-0.12
2	SLD 14	350	489	2149	-21.17	9.72	-0.12
2	SLD 15	250	261	1247	-13.46	6.66	-0.01
2	SLD 16	250	261	1247	-13.46	6.66	-0.01
2	SLV 1	1353	921	6865	-33.38	40.75	-0.51
2	SLV 2	1353	921	6865	-33.38	40.75	-0.51
2	SLV 3	1118	381	4707	-15.29	33.55	-0.25
2	SLV 4	1118	381	4707	-15.29	33.55	-0.25
2	SLV 5	1169	1415	7376	-51.04	34.94	-0.65
2	SLV 6	1169	1415	7376	-51.04	34.94	-0.65
2	SLV 7	384	-385	182	9.26	10.96	0.2
2	SLV 8	384	-385	182	9.26	10.96	0.2
2	SLV 9	776	1298	5657	-48.08	22.76	-0.52
2	SLV 10	776	1298	5657	-48.08	22.76	-0.52
2	SLV 11	-9	-502	-1538	12.22	-1.21	0.33
2	SLV 12	-9	-502	-1538	12.22	-1.21	0.33
2	SLV 13	42	532	1132	-23.52	0.17	-0.07
2	SLV 14	42	532	1132	-23.52	0.17	-0.07
2	SLV 15	-193	-8	-1026	-5.43	-7.02	0.19
2	SLV 16	-193	-8	-1026	-5.43	-7.02	0.19
3	SLU 1	719	4	2139	-1.38	27.37	-0.02
3	SLU 2	707	3	1873	-1.02	26.41	-0.01
3	SLU 3	725	4	2159	-1.4	27.61	-0.02
3	SLU 4	718	4	2000	-1.18	27.04	-0.02
3	SLU 5	710	3	1893	-1.03	26.53	-0.02
3	SLU 6	728	4	2179	-1.41	27.73	-0.02
3	SLU 7	721	4	2019	-1.19	27.15	-0.02
3	SLU 8	724	4	2178	-1.4	27.6	-0.02
3	SLU 9	717	4	2019	-1.19	27.03	-0.02
3	SLU 10	793	4	2025	-1.15	29.6	-0.02
3	SLU 11	810	4	2311	-1.53	30.8	-0.02
3	SLU 12	803	4	2151	-1.31	30.22	-0.02
3	SLU 13	795	4	2044	-1.16	29.72	-0.02
3	SLU 14	813	4	2330	-1.54	30.91	-0.02
3	SLU 15	806	4	2171	-1.32	30.34	-0.02
3	SLU 16	810	4	2330	-1.53	30.79	-0.02
3	SLU 17	803	4	2170	-1.32	30.22	-0.02
3	SLU 18	841	5	2355	-1.57	31.92	-0.02
3	SLU 19	834	4	2196	-1.35	31.35	-0.02
3	SLU 20	844	5	2375	-1.58	32.04	-0.02
3	SLU 21	837	4	2216	-1.36	31.47	-0.02
3	SLU 22	780	4	2255	-1.49	29.68	-0.02
3	SLU 23	769	4	1989	-1.12	28.72	-0.02
3	SLU 24	787	4	2275	-1.5	29.92	-0.02
3	SLU 25	780	4	2116	-1.28	29.34	-0.02
3	SLU 26	772	4	2009	-1.14	28.84	-0.02
3	SLU 27	789	4	2295	-1.51	30.03	-0.02
3	SLU 28	782	4	2136	-1.3	29.46	-0.02
3	SLU 29	786	4	2295	-1.51	29.91	-0.02
3	SLU 30	779	4	2135	-1.29	29.34	-0.02
3	SLU 31	854	4	2141	-1.25	31.91	-0.02
3	SLU 32	872	5	2427	-1.63	33.1	-0.02
3	SLU 33	865	4	2267	-1.41	32.53	-0.02
3	SLU 34	857	4	2161	-1.27	32.03	-0.02
3	SLU 35	875	5	2447	-1.64	33.22	-0.02
3	SLU 36	868	4	2287	-1.43	32.65	-0.02
3	SLU 37	872	5	2446	-1.64	33.1	-0.02
3	SLU 38	865	4	2287	-1.42	32.52	-0.02
3	SLU 39	903	5	2472	-1.67	34.23	-0.02
3	SLU 40	896	4	2312	-1.45	33.66	-0.02
3	SLU 41	905	5	2491	-1.68	34.35	-0.02
3	SLU 42	898	4	2332	-1.47	33.77	-0.02
3	SLU 43	913	5	2741	-1.76	34.79	-0.02
3	SLU 44	901	4	2475	-1.4	33.83	-0.02
3	SLU 45	919	5	2761	-1.78	35.03	-0.02
3	SLU 46	912	5	2601	-1.56	34.46	-0.02

Nodo	Cont.	Reazione a traslazione			Reazione a rotazione		
Ind.	N.br.	x	y	z	x	y	z
3	SLU 47	904	4	2495	-1.41	33.95	-0.02
3	SLU 48	922	5	2781	-1.79	35.14	-0.02
3	SLU 49	915	5	2621	-1.57	34.57	-0.02
3	SLU 50	919	5	2780	-1.78	35.02	-0.02
3	SLU 51	912	5	2621	-1.56	34.45	-0.02
3	SLU 52	987	5	2626	-1.53	37.02	-0.02
3	SLU 53	1005	5	2912	-1.9	38.22	-0.03
3	SLU 54	998	5	2753	-1.69	37.64	-0.02
3	SLU 55	990	5	2646	-1.54	37.14	-0.02
3	SLU 56	1008	5	2932	-1.92	38.33	-0.03
3	SLU 57	1001	5	2773	-1.7	37.76	-0.02
3	SLU 58	1004	5	2932	-1.91	38.21	-0.03
3	SLU 59	997	5	2772	-1.69	37.64	-0.02
3	SLU 60	1035	6	2957	-1.95	39.34	-0.03
3	SLU 61	1028	5	2798	-1.73	38.77	-0.02
3	SLU 62	1038	6	2977	-1.96	39.46	-0.03
3	SLU 63	1031	5	2817	-1.74	38.88	-0.02
3	SLU 64	975	5	2857	-1.86	37.1	-0.02
3	SLU 65	963	5	2591	-1.5	36.14	-0.02
3	SLU 66	981	5	2877	-1.88	37.34	-0.02
3	SLU 67	974	5	2718	-1.66	36.76	-0.02
3	SLU 68	966	5	2611	-1.51	36.26	-0.02
3	SLU 69	984	5	2897	-1.89	37.45	-0.02
3	SLU 70	977	5	2738	-1.67	36.88	-0.02
3	SLU 71	980	5	2897	-1.89	37.33	-0.02
3	SLU 72	973	5	2737	-1.67	36.76	-0.02
3	SLU 73	1049	5	2743	-1.63	39.33	-0.02
3	SLU 74	1067	6	3029	-2.01	40.52	-0.03
3	SLU 75	1060	5	2869	-1.79	39.95	-0.02
3	SLU 76	1052	5	2762	-1.64	39.45	-0.02
3	SLU 77	1069	6	3049	-2.02	40.64	-0.03
3	SLU 78	1062	5	2889	-1.8	40.07	-0.02
3	SLU 79	1066	6	3048	-2.02	40.52	-0.03
3	SLU 80	1059	5	2889	-1.8	39.94	-0.02
3	SLU 81	1097	6	3073	-2.05	41.65	-0.03
3	SLU 82	1090	5	2914	-1.83	41.08	-0.02
3	SLU 83	1100	6	3093	-2.06	41.77	-0.03
3	SLU 84	1093	6	2934	-1.84	41.19	-0.03
3	SLE RA 1	736	4	2172	-1.41	28.03	-0.02
3	SLE RA 2	729	4	1995	-1.17	27.39	-0.02
3	SLE RA 3	740	4	2186	-1.42	28.19	-0.02
3	SLE RA 4	736	4	2079	-1.28	27.81	-0.02
3	SLE RA 5	730	4	2008	-1.18	27.47	-0.02
3	SLE RA 6	742	4	2199	-1.43	28.27	-0.02
3	SLE RA 7	738	4	2092	-1.28	27.88	-0.02
3	SLE RA 8	740	4	2198	-1.43	28.18	-0.02
3	SLE RA 9	735	4	2092	-1.28	27.8	-0.02
3	SLE RA 10	786	4	2096	-1.26	29.52	-0.02
3	SLE RA 11	797	4	2287	-1.51	30.31	-0.02
3	SLE RA 12	793	4	2180	-1.36	29.93	-0.02
3	SLE RA 13	787	4	2109	-1.26	29.59	-0.02
3	SLE RA 14	799	4	2300	-1.52	30.39	-0.02
3	SLE RA 15	795	4	2193	-1.37	30.01	-0.02
3	SLE RA 16	797	4	2300	-1.51	30.31	-0.02
3	SLE RA 17	792	4	2193	-1.37	29.93	-0.02
3	SLE RA 18	818	4	2316	-1.54	31.06	-0.02
3	SLE RA 19	813	4	2210	-1.39	30.68	-0.02
3	SLE RA 20	820	4	2330	-1.54	31.14	-0.02
3	SLE RA 21	815	4	2223	-1.4	30.76	-0.02
3	SLE FR 1	736	4	2172	-1.41	28.03	-0.02
3	SLE FR 2	735	4	2137	-1.36	27.9	-0.02
3	SLE FR 3	737	4	2177	-1.41	28.06	-0.02
3	SLE FR 4	759	4	2180	-1.4	28.81	-0.02
3	SLE FR 5	761	4	2221	-1.45	28.97	-0.02
3	SLE FR 6	777	4	2244	-1.47	29.55	-0.02
3	SLE QP 1	736	4	2172	-1.41	28.03	-0.02
3	SLE QP 2	761	4	2215	-1.45	28.94	-0.02
3	SLD 1	1207	6	3410	-3.65	46.2	-0.03
3	SLD 2	1207	6	3410	-3.65	46.2	-0.03
3	SLD 3	1034	4	2809	-1.64	40.3	-0.02
3	SLD 4	1034	4	2809	-1.64	40.3	-0.02
3	SLD 5	1156	7	3485	-5.16	43.07	-0.03
3	SLD 6	1156	7	3485	-5.16	43.07	-0.03
3	SLD 7	581	2	1482	1.54	23.39	-0.01
3	SLD 8	581	2	1482	1.54	23.39	-0.01
3	SLD 9	940	7	2949	-4.44	34.49	-0.03
3	SLD 10	940	7	2949	-4.44	34.49	-0.03
3	SLD 11	365	1	946	2.26	14.81	0
3	SLD 12	365	1	946	2.26	14.81	0
3	SLD 13	487	4	1622	-1.26	17.58	-0.02
3	SLD 14	487	4	1622	-1.26	17.58	-0.02
3	SLD 15	314	2	1021	0.76	11.68	-0.01
3	SLD 16	314	2	1021	0.76	11.68	-0.01
3	SLV 1	1805	9	5036	-6.62	69.35	-0.05
3	SLV 2	1805	9	5036	-6.62	69.35	-0.05
3	SLV 3	1400	5	3591	-1.9	55.48	-0.03
3	SLV 4	1400	5	3591	-1.9	55.48	-0.03
3	SLV 5	1688	12	5254	-10.16	62.1	-0.05
3	SLV 6	1688	12	5254	-10.16	62.1	-0.05
3	SLV 7	339	-2	435	5.58	15.86	0.01

Nodo	Cont.	Reazione a traslazione			Reazione a rotazione		
Ind.	N.br.	x	y	z	x	y	z
3	SLV 8	339	-2	435	5.58	15.86	0.01
3	SLV 9	1183	10	3996	-8.47	42.02	-0.04
3	SLV 10	1183	10	3996	-8.47	42.02	-0.04
3	SLV 11	-166	-4	-824	7.26	-4.22	0.02
3	SLV 12	-166	-4	-824	7.26	-4.22	0.02
3	SLV 13	121	3	840	-1	2.4	-0.01
3	SLV 14	121	3	840	-1	2.4	-0.01
3	SLV 15	-284	-1	-606	3.72	-11.47	0.01
3	SLV 16	-284	-1	-606	3.72	-11.47	0.01
4	SLU 1	710	2	2146	-1.62	24.35	0
4	SLU 2	700	2	1931	-1.3	24.03	0
4	SLU 3	716	2	2167	-1.64	24.55	0
4	SLU 4	710	2	2038	-1.45	24.36	0
4	SLU 5	702	2	1951	-1.31	24.08	0
4	SLU 6	718	2	2186	-1.65	24.6	0
4	SLU 7	712	2	2058	-1.46	24.41	0
4	SLU 8	713	2	2185	-1.64	24.46	0
4	SLU 9	708	2	2056	-1.45	24.26	0
4	SLU 10	792	2	2094	-1.47	27.15	0
4	SLU 11	807	2	2330	-1.81	27.67	0
4	SLU 12	801	2	2201	-1.62	27.48	0
4	SLU 13	793	2	2114	-1.48	27.2	0
4	SLU 14	809	2	2350	-1.82	27.72	0
4	SLU 15	803	2	2221	-1.63	27.53	0
4	SLU 16	805	2	2348	-1.81	27.58	0
4	SLU 17	799	2	2219	-1.62	27.38	0
4	SLU 18	840	2	2379	-1.86	28.81	0
4	SLU 19	835	2	2250	-1.67	28.61	0
4	SLU 20	842	2	2398	-1.88	28.86	0
4	SLU 21	836	2	2270	-1.69	28.67	0
4	SLU 22	775	2	2271	-1.76	26.58	0
4	SLU 23	765	2	2056	-1.44	26.25	0
4	SLU 24	781	2	2292	-1.78	26.77	0
4	SLU 25	775	2	2163	-1.59	26.58	0
4	SLU 26	767	2	2075	-1.45	26.3	0
4	SLU 27	783	2	2311	-1.79	26.83	0
4	SLU 28	777	2	2182	-1.6	26.63	0
4	SLU 29	779	2	2310	-1.78	26.68	0
4	SLU 30	773	2	2181	-1.59	26.49	0
4	SLU 31	857	2	2219	-1.61	29.37	0
4	SLU 32	873	2	2455	-1.95	29.89	0
4	SLU 33	867	2	2326	-1.76	29.7	0
4	SLU 34	859	2	2239	-1.63	29.42	0
4	SLU 35	874	2	2474	-1.96	29.94	0
4	SLU 36	868	2	2345	-1.77	29.75	0
4	SLU 37	870	2	2473	-1.96	29.8	0
4	SLU 38	864	2	2344	-1.77	29.6	0
4	SLU 39	906	2	2504	-2	31.03	0
4	SLU 40	900	2	2375	-1.81	30.84	0
4	SLU 41	907	2	2523	-2.02	31.08	0
4	SLU 42	902	2	2394	-1.83	30.89	0
4	SLU 43	900	2	2747	-2.05	30.9	0
4	SLU 44	891	2	2532	-1.74	30.58	0
4	SLU 45	906	2	2768	-2.07	31.1	0
4	SLU 46	901	2	2639	-1.88	30.9	0
4	SLU 47	892	2	2552	-1.75	30.63	0
4	SLU 48	908	2	2787	-2.09	31.15	0
4	SLU 49	902	2	2658	-1.9	30.96	0
4	SLU 50	904	2	2786	-2.08	31	0
4	SLU 51	898	2	2657	-1.89	30.81	0
4	SLU 52	982	2	2695	-1.91	33.69	0
4	SLU 53	998	3	2931	-2.25	34.21	0
4	SLU 54	992	3	2802	-2.06	34.02	0
4	SLU 55	984	3	2715	-1.92	33.75	0
4	SLU 56	1000	3	2950	-2.26	34.27	0
4	SLU 57	994	3	2822	-2.07	34.07	0
4	SLU 58	995	3	2949	-2.25	34.12	0
4	SLU 59	990	3	2820	-2.06	33.93	0
4	SLU 60	1031	3	2980	-2.3	35.35	0
4	SLU 61	1025	3	2851	-2.11	35.16	0
4	SLU 62	1033	3	2999	-2.31	35.41	0
4	SLU 63	1027	3	2871	-2.12	35.21	0
4	SLU 64	966	3	2872	-2.19	33.12	0
4	SLU 65	956	2	2657	-1.88	32.8	0
4	SLU 66	972	3	2893	-2.21	33.32	0
4	SLU 67	966	3	2764	-2.02	33.12	0
4	SLU 68	958	2	2676	-1.89	32.85	0
4	SLU 69	973	3	2912	-2.23	33.37	0
4	SLU 70	968	3	2783	-2.04	33.18	0
4	SLU 71	969	3	2911	-2.22	33.23	0
4	SLU 72	963	3	2782	-2.03	33.03	0
4	SLU 73	1047	3	2820	-2.05	35.91	0
4	SLU 74	1063	3	3056	-2.39	36.44	0
4	SLU 75	1057	3	2927	-2.2	36.24	0
4	SLU 76	1049	3	2840	-2.06	35.97	0
4	SLU 77	1065	3	3075	-2.4	36.49	0
4	SLU 78	1059	3	2946	-2.21	36.29	0
4	SLU 79	1061	3	3074	-2.39	36.34	0
4	SLU 80	1055	3	2945	-2.2	36.15	0
4	SLU 81	1096	3	3105	-2.44	37.57	0

Nodo	Cont.	Reazione a traslazione			Reazione a rotazione		
Ind.	N.br.	x	y	z	x	y	z
4	SLU 82	1090	3	2976	-2.25	37.38	0
4	SLU 83	1098	3	3124	-2.45	37.63	0
4	SLU 84	1092	3	2995	-2.26	37.43	0
4	SLE RA 1	728	2	2181	-1.66	24.99	0
4	SLE RA 2	722	2	2038	-1.45	24.77	0
4	SLE RA 3	732	2	2195	-1.67	25.12	0
4	SLE RA 4	729	2	2110	-1.54	24.99	0
4	SLE RA 5	723	2	2051	-1.45	24.81	0
4	SLE RA 6	734	2	2208	-1.68	25.16	0
4	SLE RA 7	730	2	2123	-1.55	25.03	0
4	SLE RA 8	731	2	2207	-1.67	25.06	0
4	SLE RA 9	727	2	2122	-1.55	24.93	0
4	SLE RA 10	783	2	2147	-1.56	26.85	0
4	SLE RA 11	793	2	2304	-1.79	27.2	0
4	SLE RA 12	790	2	2218	-1.66	27.07	0
4	SLE RA 13	784	2	2160	-1.57	26.89	0
4	SLE RA 14	795	2	2317	-1.79	27.23	0
4	SLE RA 15	791	2	2231	-1.67	27.1	0
4	SLE RA 16	792	2	2316	-1.79	27.14	0
4	SLE RA 17	788	2	2230	-1.66	27.01	0
4	SLE RA 18	816	2	2337	-1.82	27.96	0
4	SLE RA 19	812	2	2251	-1.69	27.83	0
4	SLE RA 20	817	2	2350	-1.83	27.99	0
4	SLE RA 21	813	2	2264	-1.7	27.86	0
4	SLE FR 1	728	2	2181	-1.66	24.99	0
4	SLE FR 2	727	2	2153	-1.61	24.95	0
4	SLE FR 3	729	2	2187	-1.66	25	0
4	SLE FR 4	753	2	2199	-1.66	25.84	0
4	SLE FR 5	755	2	2233	-1.71	25.89	0
4	SLE FR 6	772	2	2259	-1.74	26.47	0
4	SLE QP 1	728	2	2181	-1.66	24.99	0
4	SLE QP 2	755	2	2228	-1.71	25.88	0
4	SLD 1	1195	5	3161	-5.79	41.84	0.01
4	SLD 2	1195	5	3161	-5.79	41.84	0.01
4	SLD 3	1020	3	2710	-2.37	36.01	0
4	SLD 4	1020	3	2710	-2.37	36.01	0
4	SLD 5	1152	6	3192	-8.12	39.51	0.01
4	SLD 6	1152	6	3192	-8.12	39.51	0.01
4	SLD 7	569	-1	1689	3.29	20.08	-0.01
4	SLD 8	569	-1	1689	3.29	20.08	-0.01
4	SLD 9	940	5	2768	-6.7	31.68	0.01
4	SLD 10	940	5	2768	-6.7	31.68	0.01
4	SLD 11	358	-2	1264	4.71	12.25	-0.01
4	SLD 12	358	-2	1264	4.71	12.25	-0.01
4	SLD 13	489	1	1746	-1.05	15.75	0
4	SLD 14	489	1	1746	-1.05	15.75	0
4	SLD 15	315	-1	1295	2.37	9.92	0
4	SLD 16	315	-1	1295	2.37	9.92	0
4	SLV 1	1785	9	4433	-11.26	63.23	0.02
4	SLV 2	1785	9	4433	-11.26	63.23	0.02
4	SLV 3	1375	4	3344	-3.24	49.56	0.01
4	SLV 4	1375	4	3344	-3.24	49.56	0.01
4	SLV 5	1685	11	4542	-16.73	57.82	0.03
4	SLV 6	1685	11	4542	-16.73	57.82	0.03
4	SLV 7	319	-5	911	10	12.24	-0.02
4	SLV 8	319	-5	911	10	12.24	-0.02
4	SLV 9	1190	9	3545	-13.41	39.52	0.02
4	SLV 10	1190	9	3545	-13.41	39.52	0.02
4	SLV 11	-176	-8	-85	13.32	-6.06	-0.02
4	SLV 12	-176	-8	-85	13.32	-6.06	-0.02
4	SLV 13	134	0	1112	-0.17	2.2	0
4	SLV 14	134	0	1112	-0.17	2.2	0
4	SLV 15	-275	-5	23	7.85	-11.47	-0.01
4	SLV 16	-275	-5	23	7.85	-11.47	-0.01
5	SLU 1	695	3	2351	-2.12	23.91	-0.01
5	SLU 2	681	3	2155	-1.77	23.25	-0.01
5	SLU 3	701	3	2374	-2.14	24.13	-0.01
5	SLU 4	692	3	2257	-1.94	23.73	-0.01
5	SLU 5	682	3	2175	-1.78	23.31	-0.01
5	SLU 6	703	3	2394	-2.16	24.2	-0.01
5	SLU 7	694	3	2277	-1.95	23.8	-0.01
5	SLU 8	698	3	2391	-2.15	24.05	-0.01
5	SLU 9	690	3	2273	-1.94	23.65	-0.01
5	SLU 10	773	3	2353	-2	26.37	-0.01
5	SLU 11	793	3	2573	-2.38	27.25	-0.01
5	SLU 12	785	3	2455	-2.17	26.85	-0.01
5	SLU 13	775	3	2373	-2.02	26.44	-0.01
5	SLU 14	795	3	2593	-2.4	27.32	-0.01
5	SLU 15	786	3	2475	-2.19	26.92	-0.01
5	SLU 16	790	3	2589	-2.38	27.18	-0.01
5	SLU 17	782	3	2472	-2.18	26.78	-0.01
5	SLU 18	826	3	2635	-2.45	28.38	-0.01
5	SLU 19	818	3	2517	-2.24	27.98	-0.01
5	SLU 20	828	3	2655	-2.47	28.45	-0.01
5	SLU 21	820	3	2537	-2.26	28.05	-0.01
5	SLU 22	760	3	2501	-2.31	26.13	-0.01
5	SLU 23	746	3	2305	-1.96	25.46	-0.01
5	SLU 24	766	3	2525	-2.34	26.34	-0.01
5	SLU 25	758	3	2407	-2.13	25.94	-0.01
5	SLU 26	748	3	2325	-1.98	25.53	-0.01

Nodo	Cont.	Reazione a traslazione			Reazione a rotazione		
Ind.	N.br.	x	y	z	x	y	z
5	SLU 27	768	3	2545	-2.35	26.41	-0.01
5	SLU 28	760	3	2427	-2.14	26.01	-0.01
5	SLU 29	763	3	2541	-2.34	26.27	-0.01
5	SLU 30	755	3	2423	-2.13	25.87	-0.01
5	SLU 31	838	3	2504	-2.2	28.59	-0.01
5	SLU 32	858	4	2723	-2.57	29.47	-0.01
5	SLU 33	850	4	2606	-2.36	29.07	-0.01
5	SLU 34	840	3	2524	-2.21	28.65	-0.01
5	SLU 35	860	4	2743	-2.59	29.54	-0.01
5	SLU 36	852	4	2626	-2.38	29.14	-0.01
5	SLU 37	856	4	2740	-2.58	29.39	-0.01
5	SLU 38	847	4	2622	-2.37	28.99	-0.01
5	SLU 39	892	4	2785	-2.64	30.59	-0.01
5	SLU 40	883	4	2667	-2.44	30.19	-0.01
5	SLU 41	893	4	2805	-2.66	30.66	-0.01
5	SLU 42	885	4	2687	-2.45	30.26	-0.01
5	SLU 43	881	4	3004	-2.68	30.33	-0.01
5	SLU 44	867	4	2808	-2.34	29.66	-0.01
5	SLU 45	887	4	3028	-2.71	30.54	-0.01
5	SLU 46	878	4	2910	-2.5	30.14	-0.01
5	SLU 47	868	4	2828	-2.35	29.73	-0.01
5	SLU 48	889	4	3048	-2.73	30.61	-0.01
5	SLU 49	880	4	2930	-2.52	30.21	-0.01
5	SLU 50	884	4	3044	-2.72	30.47	-0.01
5	SLU 51	876	4	2927	-2.51	30.07	-0.01
5	SLU 52	959	4	3007	-2.57	32.79	-0.01
5	SLU 53	979	4	3227	-2.95	33.67	-0.01
5	SLU 54	971	4	3109	-2.74	33.27	-0.01
5	SLU 55	961	4	3027	-2.59	32.85	-0.01
5	SLU 56	981	4	3247	-2.96	33.74	-0.01
5	SLU 57	972	4	3129	-2.76	33.34	-0.01
5	SLU 58	976	4	3243	-2.95	33.59	-0.01
5	SLU 59	968	4	3125	-2.74	33.19	-0.01
5	SLU 60	1012	4	3288	-3.02	34.79	-0.01
5	SLU 61	1004	4	3171	-2.81	34.39	-0.01
5	SLU 62	1014	4	3308	-3.04	34.86	-0.01
5	SLU 63	1006	4	3191	-2.83	34.46	-0.01
5	SLU 64	946	4	3155	-2.88	32.54	-0.01
5	SLU 65	932	4	2959	-2.53	31.88	-0.01
5	SLU 66	952	4	3178	-2.9	32.76	-0.01
5	SLU 67	944	4	3061	-2.7	32.36	-0.01
5	SLU 68	934	4	2979	-2.55	31.95	-0.01
5	SLU 69	954	4	3198	-2.92	32.83	-0.01
5	SLU 70	946	4	3081	-2.71	32.43	-0.01
5	SLU 71	950	4	3195	-2.91	32.68	-0.01
5	SLU 72	941	4	3077	-2.7	32.28	-0.01
5	SLU 73	1024	4	3157	-2.76	35	-0.01
5	SLU 74	1044	4	3377	-3.14	35.88	-0.01
5	SLU 75	1036	4	3259	-2.93	35.48	-0.01
5	SLU 76	1026	4	3177	-2.78	35.07	-0.01
5	SLU 77	1046	4	3397	-3.16	35.95	-0.01
5	SLU 78	1038	4	3279	-2.95	35.55	-0.01
5	SLU 79	1042	4	3393	-3.14	35.81	-0.01
5	SLU 80	1033	4	3276	-2.94	35.41	-0.01
5	SLU 81	1078	4	3439	-3.21	37.01	-0.01
5	SLU 82	1069	4	3321	-3	36.61	-0.01
5	SLU 83	1079	4	3459	-3.23	37.08	-0.01
5	SLU 84	1071	4	3341	-3.02	36.68	-0.01
5	SLE RA 1	713	3	2394	-2.17	24.55	-0.01
5	SLE RA 2	704	3	2263	-1.94	24.1	-0.01
5	SLE RA 3	717	3	2409	-2.19	24.69	-0.01
5	SLE RA 4	712	3	2331	-2.05	24.42	-0.01
5	SLE RA 5	705	3	2276	-1.95	24.15	-0.01
5	SLE RA 6	719	3	2423	-2.2	24.74	-0.01
5	SLE RA 7	713	3	2344	-2.06	24.47	-0.01
5	SLE RA 8	716	3	2420	-2.19	24.64	-0.01
5	SLE RA 9	710	3	2342	-2.05	24.37	-0.01
5	SLE RA 10	765	3	2396	-2.1	26.19	-0.01
5	SLE RA 11	779	3	2542	-2.35	26.77	-0.01
5	SLE RA 12	773	3	2463	-2.21	26.51	-0.01
5	SLE RA 13	767	3	2409	-2.11	26.23	-0.01
5	SLE RA 14	780	3	2555	-2.36	26.82	-0.01
5	SLE RA 15	774	3	2477	-2.22	26.55	-0.01
5	SLE RA 16	777	3	2553	-2.35	26.72	-0.01
5	SLE RA 17	772	3	2474	-2.21	26.45	-0.01
5	SLE RA 18	801	3	2583	-2.39	27.52	-0.01
5	SLE RA 19	796	3	2505	-2.26	27.26	-0.01
5	SLE RA 20	802	3	2596	-2.41	27.57	-0.01
5	SLE RA 21	797	3	2518	-2.27	27.3	-0.01
5	SLE FR 1	713	3	2394	-2.17	24.55	-0.01
5	SLE FR 2	711	3	2368	-2.12	24.46	-0.01
5	SLE FR 3	714	3	2399	-2.17	24.57	-0.01
5	SLE FR 4	738	3	2424	-2.19	25.35	-0.01
5	SLE FR 5	740	3	2456	-2.24	25.46	-0.01
5	SLE FR 6	757	3	2488	-2.28	26.04	-0.01
5	SLE QP 1	713	3	2394	-2.17	24.55	-0.01
5	SLE QP 2	740	3	2451	-2.24	25.44	-0.01
5	SLD 1	1168	10	3285	-8.37	40.83	-0.02
5	SLD 2	1168	10	3285	-8.37	40.83	-0.02
5	SLD 3	992	4	2857	-3.23	34.89	-0.01

Nodo	Cont.	Reazione a traslazione			Reazione a rotazione		
Ind.	N.br.	x	y	z	x	y	z
5	SLD 4	992	4	2857	-3.23	34.89	-0.01
5	SLD 5	1135	14	3350	-11.86	39.07	-0.02
5	SLD 6	1135	14	3350	-11.86	39.07	-0.02
5	SLD 7	549	-5	1924	5.25	19.26	0.01
5	SLD 8	549	-5	1924	5.25	19.26	0.01
5	SLD 9	931	11	2977	-9.73	31.62	-0.02
5	SLD 10	931	11	2977	-9.73	31.62	-0.02
5	SLD 11	344	-7	1551	7.39	11.81	0.01
5	SLD 12	344	-7	1551	7.39	11.81	0.01
5	SLD 13	487	2	2044	-1.24	16	0
5	SLD 14	487	2	2044	-1.24	16	0
5	SLD 15	312	-4	1616	3.89	10.05	0
5	SLD 16	312	-4	1616	3.89	10.05	0
5	SLV 1	1742	19	4421	-16.59	61.46	-0.03
5	SLV 2	1742	19	4421	-16.59	61.46	-0.03
5	SLV 3	1329	6	3392	-4.55	47.5	-0.01
5	SLV 4	1329	6	3392	-4.55	47.5	-0.01
5	SLV 5	1666	28	4603	-24.79	57.41	-0.04
5	SLV 6	1666	28	4603	-24.79	57.41	-0.04
5	SLV 7	290	-16	1172	15.32	10.89	0.02
5	SLV 8	290	-16	1172	15.32	10.89	0.02
5	SLV 9	1189	22	3729	-19.79	39.99	-0.03
5	SLV 10	1189	22	3729	-19.79	39.99	-0.03
5	SLV 11	-187	-22	298	20.32	-6.53	0.03
5	SLV 12	-187	-22	298	20.32	-6.53	0.03
5	SLV 13	150	0	1509	0.08	3.38	0
5	SLV 14	150	0	1509	0.08	3.38	0
5	SLV 15	-262	-13	480	12.11	-10.58	0.02
5	SLV 16	-262	-13	480	12.11	-10.58	0.02
6	SLU 1	669	3	2602	-2.35	22.36	-0.01
6	SLU 2	655	3	2414	-1.97	21.98	-0.01
6	SLU 3	675	3	2628	-2.37	22.56	-0.01
6	SLU 4	667	3	2516	-2.15	22.33	-0.01
6	SLU 5	657	3	2434	-1.98	22.03	-0.01
6	SLU 6	677	3	2649	-2.39	22.61	-0.01
6	SLU 7	669	3	2536	-2.16	22.38	-0.01
6	SLU 8	672	3	2643	-2.38	22.46	-0.01
6	SLU 9	664	3	2530	-2.15	22.24	-0.01
6	SLU 10	746	3	2653	-2.23	25	-0.01
6	SLU 11	766	4	2868	-2.64	25.58	-0.01
6	SLU 12	758	4	2755	-2.41	25.35	-0.01
6	SLU 13	748	3	2674	-2.24	25.05	-0.01
6	SLU 14	767	4	2889	-2.65	25.63	-0.01
6	SLU 15	759	4	2776	-2.42	25.4	-0.01
6	SLU 16	763	4	2883	-2.64	25.48	-0.01
6	SLU 17	755	4	2770	-2.41	25.25	-0.01
6	SLU 18	798	4	2944	-2.72	26.67	-0.01
6	SLU 19	790	4	2831	-2.49	26.44	-0.01
6	SLU 20	800	4	2965	-2.73	26.72	-0.01
6	SLU 21	792	4	2852	-2.51	26.5	-0.01
6	SLU 22	732	3	2781	-2.55	24.46	-0.01
6	SLU 23	719	3	2593	-2.18	24.08	-0.01
6	SLU 24	738	4	2808	-2.58	24.66	-0.01
6	SLU 25	730	3	2695	-2.36	24.44	-0.01
6	SLU 26	721	3	2614	-2.19	24.14	-0.01
6	SLU 27	740	4	2829	-2.6	24.72	-0.01
6	SLU 28	732	3	2716	-2.37	24.49	-0.01
6	SLU 29	736	4	2823	-2.59	24.57	-0.01
6	SLU 30	728	3	2710	-2.36	24.34	-0.01
6	SLU 31	809	4	2833	-2.44	27.1	-0.01
6	SLU 32	829	4	3048	-2.84	27.68	-0.01
6	SLU 33	821	4	2935	-2.62	27.46	-0.01
6	SLU 34	811	4	2854	-2.45	27.16	-0.01
6	SLU 35	831	4	3068	-2.86	27.74	-0.01
6	SLU 36	823	4	2955	-2.63	27.51	-0.01
6	SLU 37	826	4	3062	-2.85	27.59	-0.01
6	SLU 38	818	4	2950	-2.62	27.36	-0.01
6	SLU 39	862	4	3123	-2.93	28.78	-0.01
6	SLU 40	854	4	3011	-2.7	28.55	-0.01
6	SLU 41	863	4	3144	-2.94	28.83	-0.01
6	SLU 42	855	4	3031	-2.72	28.6	-0.01
6	SLU 43	847	4	3321	-2.98	28.34	-0.01
6	SLU 44	834	4	3133	-2.6	27.96	-0.01
6	SLU 45	854	4	3347	-3.01	28.54	-0.01
6	SLU 46	846	4	3235	-2.78	28.32	-0.01
6	SLU 47	836	4	3153	-2.61	28.02	-0.01
6	SLU 48	856	4	3368	-3.02	28.6	-0.01
6	SLU 49	848	4	3255	-2.8	28.37	-0.01
6	SLU 50	851	4	3362	-3.01	28.45	-0.01
6	SLU 51	843	4	3249	-2.78	28.22	-0.01
6	SLU 52	925	4	3372	-2.86	30.98	-0.01
6	SLU 53	944	4	3587	-3.27	31.56	-0.01
6	SLU 54	936	4	3474	-3.04	31.33	-0.01
6	SLU 55	927	4	3393	-2.88	31.03	-0.01
6	SLU 56	946	4	3608	-3.28	31.61	-0.01
6	SLU 57	938	4	3495	-3.06	31.39	-0.01
6	SLU 58	942	4	3602	-3.27	31.47	-0.01
6	SLU 59	934	4	3489	-3.04	31.24	-0.01
6	SLU 60	977	5	3663	-3.35	32.65	-0.01
6	SLU 61	969	4	3550	-3.12	32.43	-0.01

Nodo	Cont.	Reazione a traslazione			Reazione a rotazione		
Ind.	N.br.	x	y	z	x	y	z
6	SLU 62	979	5	3684	-3.37	32.71	-0.01
6	SLU 63	971	4	3571	-3.14	32.48	-0.01
6	SLU 64	911	4	3500	-3.19	30.45	-0.01
6	SLU 65	898	4	3312	-2.81	30.07	-0.01
6	SLU 66	917	4	3527	-3.22	30.65	-0.01
6	SLU 67	909	4	3414	-2.99	30.42	-0.01
6	SLU 68	899	4	3333	-2.82	30.12	-0.01
6	SLU 69	919	4	3548	-3.23	30.7	-0.01
6	SLU 70	911	4	3435	-3	30.47	-0.01
6	SLU 71	915	4	3542	-3.22	30.55	-0.01
6	SLU 72	907	4	3429	-2.99	30.33	-0.01
6	SLU 73	988	5	3552	-3.07	33.09	-0.01
6	SLU 74	1008	5	3766	-3.48	33.67	-0.01
6	SLU 75	1000	5	3654	-3.25	33.44	-0.01
6	SLU 76	990	5	3572	-3.08	33.14	-0.01
6	SLU 77	1010	5	3787	-3.49	33.72	-0.01
6	SLU 78	1002	5	3674	-3.26	33.49	-0.01
6	SLU 79	1005	5	3781	-3.48	33.57	-0.01
6	SLU 80	997	5	3668	-3.25	33.35	-0.01
6	SLU 81	1040	5	3842	-3.56	34.76	-0.01
6	SLU 82	1032	5	3730	-3.33	34.53	-0.01
6	SLU 83	1042	5	3863	-3.57	34.81	-0.01
6	SLU 84	1034	5	3750	-3.35	34.59	-0.01
6	SLE RA 1	687	3	2653	-2.41	22.96	-0.01
6	SLE RA 2	678	3	2528	-2.15	22.71	-0.01
6	SLE RA 3	691	3	2671	-2.42	23.09	-0.01
6	SLE RA 4	686	3	2596	-2.27	22.94	-0.01
6	SLE RA 5	679	3	2541	-2.16	22.74	-0.01
6	SLE RA 6	692	3	2685	-2.44	23.13	-0.01
6	SLE RA 7	687	3	2609	-2.28	22.98	-0.01
6	SLE RA 8	689	3	2681	-2.43	23.03	-0.01
6	SLE RA 9	684	3	2605	-2.28	22.88	-0.01
6	SLE RA 10	738	3	2687	-2.33	24.72	-0.01
6	SLE RA 11	751	4	2831	-2.6	25.11	-0.01
6	SLE RA 12	746	3	2755	-2.45	24.95	-0.01
6	SLE RA 13	740	3	2701	-2.34	24.75	-0.01
6	SLE RA 14	753	4	2844	-2.61	25.14	-0.01
6	SLE RA 15	747	4	2769	-2.46	24.99	-0.01
6	SLE RA 16	750	4	2840	-2.6	25.04	-0.01
6	SLE RA 17	744	3	2765	-2.45	24.89	-0.01
6	SLE RA 18	773	4	2881	-2.65	25.83	-0.01
6	SLE RA 19	768	4	2806	-2.5	25.68	-0.01
6	SLE RA 20	774	4	2895	-2.66	25.87	-0.01
6	SLE RA 21	769	4	2820	-2.51	25.72	-0.01
6	SLE FR 1	687	3	2653	-2.41	22.96	-0.01
6	SLE FR 2	685	3	2628	-2.35	22.91	-0.01
6	SLE FR 3	687	3	2659	-2.41	22.97	-0.01
6	SLE FR 4	711	3	2696	-2.43	23.77	-0.01
6	SLE FR 5	713	3	2727	-2.48	23.83	-0.01
6	SLE FR 6	730	3	2767	-2.53	24.4	-0.01
6	SLE QP 1	687	3	2653	-2.41	22.96	-0.01
6	SLE QP 2	713	3	2721	-2.48	23.82	-0.01
6	SLD 1	1124	13	3504	-9.83	38.45	-0.02
6	SLD 2	1124	13	3504	-9.83	38.45	-0.02
6	SLD 3	949	5	3044	-3.58	32.68	-0.01
6	SLD 4	949	5	3044	-3.58	32.68	-0.01
6	SLD 5	1100	18	3654	-14.17	36.96	-0.03
6	SLD 6	1100	18	3654	-14.17	36.96	-0.03
6	SLD 7	519	-8	2120	6.67	17.72	0.01
6	SLD 8	519	-8	2120	6.67	17.72	0.01
6	SLD 9	906	15	3322	-11.63	29.92	-0.03
6	SLD 10	906	15	3322	-11.63	29.92	-0.03
6	SLD 11	325	-11	1789	9.21	10.68	0.02
6	SLD 12	325	-11	1789	9.21	10.68	0.02
6	SLD 13	476	2	2399	-1.38	14.96	0
6	SLD 14	476	2	2399	-1.38	14.96	0
6	SLD 15	302	-6	1939	4.87	9.19	0.01
6	SLD 16	302	-6	1939	4.87	9.19	0.01
6	SLV 1	1675	26	4568	-19.69	58.07	-0.05
6	SLV 2	1675	26	4568	-19.69	58.07	-0.05
6	SLV 3	1266	7	3468	-5.04	44.51	-0.01
6	SLV 4	1266	7	3468	-5.04	44.51	-0.01
6	SLV 5	1622	38	4943	-29.87	54.65	-0.07
6	SLV 6	1622	38	4943	-29.87	54.65	-0.07
6	SLV 7	258	-23	1278	18.98	9.47	0.04
6	SLV 8	258	-23	1278	18.98	9.47	0.04
6	SLV 9	1167	30	4165	-23.94	38.17	-0.05
6	SLV 10	1167	30	4165	-23.94	38.17	-0.05
6	SLV 11	-197	-31	500	24.91	-7.01	0.06
6	SLV 12	-197	-31	500	24.91	-7.01	0.06
6	SLV 13	160	0	1975	0.08	3.13	0
6	SLV 14	160	0	1975	0.08	3.13	0
6	SLV 15	-250	-19	875	14.73	-10.43	0.04
6	SLV 16	-250	-19	875	14.73	-10.43	0.04
7	SLU 1	637	3	2879	-2.16	21.36	-0.01
7	SLU 2	619	2	2692	-1.8	20.65	-0.01
7	SLU 3	644	3	2910	-2.19	21.58	-0.01
7	SLU 4	633	3	2798	-1.97	21.15	-0.01
7	SLU 5	622	2	2714	-1.81	20.73	-0.01
7	SLU 6	646	3	2932	-2.2	21.66	-0.01

Nodo	Cont.	Reazione a traslazione			Reazione a rotazione		
Ind.	N.br.	x	y	z	x	y	z
7	SLU 7	636	3	2820	-1.98	21.23	-0.01
7	SLU 8	642	3	2924	-2.19	21.52	-0.01
7	SLU 9	631	3	2811	-1.97	21.1	-0.01
7	SLU 10	707	3	2975	-2.03	23.55	-0.01
7	SLU 11	731	3	3193	-2.42	24.48	-0.01
7	SLU 12	721	3	3081	-2.2	24.05	-0.01
7	SLU 13	709	3	2998	-2.05	23.63	-0.01
7	SLU 14	734	3	3215	-2.43	24.56	-0.01
7	SLU 15	723	3	3103	-2.22	24.13	-0.01
7	SLU 16	730	3	3207	-2.42	24.42	-0.01
7	SLU 17	719	3	3095	-2.21	24	-0.01
7	SLU 18	762	3	3284	-2.5	25.5	-0.01
7	SLU 19	752	3	3172	-2.28	25.08	-0.01
7	SLU 20	765	3	3306	-2.51	25.59	-0.01
7	SLU 21	754	3	3194	-2.29	25.16	-0.01
7	SLU 22	698	3	3090	-2.35	23.37	-0.01
7	SLU 23	680	3	2903	-1.98	22.66	-0.01
7	SLU 24	704	3	3120	-2.37	23.58	-0.01
7	SLU 25	694	3	3008	-2.15	23.16	-0.01
7	SLU 26	682	3	2925	-2	22.74	-0.01
7	SLU 27	707	3	3143	-2.38	23.67	-0.01
7	SLU 28	696	3	3030	-2.17	23.24	-0.01
7	SLU 29	703	3	3134	-2.37	23.53	-0.01
7	SLU 30	692	3	3022	-2.16	23.1	-0.01
7	SLU 31	768	3	3186	-2.22	25.56	-0.01
7	SLU 32	792	3	3404	-2.61	26.48	-0.01
7	SLU 33	781	3	3291	-2.39	26.06	-0.01
7	SLU 34	770	3	3208	-2.23	25.64	-0.01
7	SLU 35	794	3	3426	-2.62	26.57	-0.01
7	SLU 36	784	3	3314	-2.4	26.14	-0.01
7	SLU 37	790	3	3418	-2.61	26.43	-0.01
7	SLU 38	779	3	3305	-2.39	26.01	-0.01
7	SLU 39	823	3	3494	-2.68	27.51	-0.01
7	SLU 40	812	3	3382	-2.47	27.08	-0.01
7	SLU 41	825	3	3517	-2.7	27.59	-0.01
7	SLU 42	815	3	3404	-2.48	27.17	-0.01
7	SLU 43	808	3	3671	-2.75	27.08	-0.01
7	SLU 44	790	3	3484	-2.39	26.37	-0.01
7	SLU 45	814	3	3701	-2.77	27.3	-0.01
7	SLU 46	804	3	3589	-2.55	26.87	-0.01
7	SLU 47	792	3	3506	-2.4	26.45	-0.01
7	SLU 48	817	3	3724	-2.79	27.38	-0.01
7	SLU 49	806	3	3611	-2.57	26.95	-0.01
7	SLU 50	812	3	3715	-2.77	27.24	-0.01
7	SLU 51	802	3	3603	-2.56	26.82	-0.01
7	SLU 52	877	3	3767	-2.62	29.27	-0.01
7	SLU 53	902	4	3985	-3.01	30.2	-0.01
7	SLU 54	891	3	3872	-2.79	29.77	-0.01
7	SLU 55	880	3	3789	-2.63	29.35	-0.01
7	SLU 56	904	4	4007	-3.02	30.28	-0.01
7	SLU 57	893	4	3895	-2.8	29.85	-0.01
7	SLU 58	900	4	3999	-3.01	30.14	-0.01
7	SLU 59	889	3	3886	-2.79	29.72	-0.01
7	SLU 60	933	4	4075	-3.08	31.22	-0.01
7	SLU 61	922	4	3963	-2.87	30.8	-0.01
7	SLU 62	935	4	4098	-3.1	31.31	-0.01
7	SLU 63	924	4	3985	-2.88	30.88	-0.01
7	SLU 64	868	3	3881	-2.93	29.09	-0.01
7	SLU 65	850	3	3694	-2.57	28.38	-0.01
7	SLU 66	875	4	3912	-2.96	29.3	-0.01
7	SLU 67	864	3	3800	-2.74	28.88	-0.01
7	SLU 68	853	3	3716	-2.58	28.46	-0.01
7	SLU 69	877	4	3934	-2.97	29.39	-0.01
7	SLU 70	866	3	3822	-2.75	28.96	-0.01
7	SLU 71	873	4	3926	-2.96	29.25	-0.01
7	SLU 72	862	3	3814	-2.74	28.82	-0.01
7	SLU 73	938	4	3977	-2.81	31.28	-0.01
7	SLU 74	962	4	4195	-3.19	32.2	-0.01
7	SLU 75	952	4	4083	-2.97	31.78	-0.01
7	SLU 76	940	4	4000	-2.82	31.36	-0.01
7	SLU 77	965	4	4217	-3.21	32.29	-0.01
7	SLU 78	954	4	4105	-2.99	31.86	-0.01
7	SLU 79	960	4	4209	-3.19	32.15	-0.01
7	SLU 80	950	4	4097	-2.98	31.72	-0.01
7	SLU 81	993	4	4286	-3.27	33.23	-0.01
7	SLU 82	983	4	4174	-3.05	32.8	-0.01
7	SLU 83	996	4	4308	-3.28	33.31	-0.01
7	SLU 84	985	4	4196	-3.06	32.89	-0.01
7	SLE RA 1	654	3	2939	-2.22	21.93	-0.01
7	SLE RA 2	643	3	2815	-1.97	21.46	-0.01
7	SLE RA 3	659	3	2960	-2.23	22.08	-0.01
7	SLE RA 4	652	3	2885	-2.09	21.79	-0.01
7	SLE RA 5	644	3	2829	-1.98	21.51	-0.01
7	SLE RA 6	660	3	2975	-2.24	22.13	-0.01
7	SLE RA 7	653	3	2900	-2.1	21.85	-0.01
7	SLE RA 8	658	3	2969	-2.23	22.04	-0.01
7	SLE RA 9	651	3	2894	-2.09	21.76	-0.01
7	SLE RA 10	701	3	3003	-2.13	23.39	-0.01
7	SLE RA 11	717	3	3149	-2.39	24.01	-0.01
7	SLE RA 12	710	3	3074	-2.24	23.73	-0.01

Nodo	Cont.	Reazione a traslazione			Reazione a rotazione		
Ind.	N.br.	x	y	z	x	y	z
7	SLE RA 13	703	3	3018	-2.14	23.45	-0.01
7	SLE RA 14	719	3	3163	-2.4	24.07	-0.01
7	SLE RA 15	712	3	3089	-2.25	23.78	-0.01
7	SLE RA 16	716	3	3158	-2.39	23.98	-0.01
7	SLE RA 17	709	3	3083	-2.24	23.69	-0.01
7	SLE RA 18	738	3	3209	-2.44	24.7	-0.01
7	SLE RA 19	731	3	3134	-2.29	24.41	-0.01
7	SLE RA 20	739	3	3224	-2.45	24.75	-0.01
7	SLE RA 21	732	3	3149	-2.3	24.47	-0.01
7	SLE FR 1	654	3	2939	-2.22	21.93	-0.01
7	SLE FR 2	652	3	2914	-2.17	21.84	-0.01
7	SLE FR 3	655	3	2945	-2.22	21.95	-0.01
7	SLE FR 4	677	3	2995	-2.23	22.67	-0.01
7	SLE FR 5	680	3	3026	-2.29	22.78	-0.01
7	SLE FR 6	696	3	3074	-2.33	23.31	-0.01
7	SLE QP 1	654	3	2939	-2.22	21.93	-0.01
7	SLE QP 2	680	3	3020	-2.28	22.76	-0.01
7	SLD 1	1068	12	3764	-9.55	36.52	-0.02
7	SLD 2	1068	12	3764	-9.55	36.52	-0.02
7	SLD 3	896	4	3239	-3.21	30.82	-0.01
7	SLD 4	896	4	3239	-3.21	30.82	-0.01
7	SLD 5	1056	18	4039	-14.08	35.54	-0.03
7	SLD 6	1056	18	4039	-14.08	35.54	-0.03
7	SLD 7	484	-9	2290	7.05	16.53	0.02
7	SLD 8	484	-9	2290	7.05	16.53	0.02
7	SLD 9	875	15	3750	-11.62	29	-0.03
7	SLD 10	875	15	3750	-11.62	29	-0.03
7	SLD 11	303	-12	2001	9.51	9.98	0.02
7	SLD 12	303	-12	2001	9.51	9.98	0.02
7	SLD 13	463	1	2801	-1.36	14.71	0
7	SLD 14	463	1	2801	-1.36	14.71	0
7	SLD 15	291	-7	2276	4.98	9	0.01
7	SLD 16	291	-7	2276	4.98	9	0.01
7	SLV 1	1589	25	4773	-19.3	54.96	-0.05
7	SLV 2	1589	25	4773	-19.3	54.96	-0.05
7	SLV 3	1186	6	3526	-4.44	41.56	-0.01
7	SLV 4	1186	6	3526	-4.44	41.56	-0.01
7	SLV 5	1563	38	5437	-29.92	52.74	-0.07
7	SLV 6	1563	38	5437	-29.92	52.74	-0.07
7	SLV 7	220	-25	1281	19.61	8.08	0.04
7	SLV 8	220	-25	1281	19.61	8.08	0.04
7	SLV 9	1139	31	4759	-24.17	37.44	-0.06
7	SLV 10	1139	31	4759	-24.17	37.44	-0.06
7	SLV 11	-204	-33	604	25.36	-7.22	0.06
7	SLV 12	-204	-33	604	25.36	-7.22	0.06
7	SLV 13	173	0	2514	-0.13	3.96	0
7	SLV 14	173	0	2514	-0.13	3.96	0
7	SLV 15	-230	-19	1268	14.73	-9.44	0.04
7	SLV 16	-230	-19	1268	14.73	-9.44	0.04
8	SLU 1	575	1	3168	-1.63	18.89	-0.01
8	SLU 2	559	1	2976	-1.33	18.43	-0.01
8	SLU 3	582	1	3203	-1.64	19.09	-0.01
8	SLU 4	572	1	3088	-1.46	18.82	-0.01
8	SLU 5	562	1	3001	-1.33	18.51	-0.01
8	SLU 6	584	1	3228	-1.65	19.16	-0.01
8	SLU 7	574	1	3113	-1.47	18.89	-0.01
8	SLU 8	580	1	3217	-1.64	19.04	-0.01
8	SLU 9	571	1	3102	-1.46	18.76	-0.01
8	SLU 10	641	1	3305	-1.5	21.1	-0.01
8	SLU 11	663	1	3532	-1.81	21.76	-0.01
8	SLU 12	654	1	3417	-1.63	21.49	-0.01
8	SLU 13	643	1	3330	-1.5	21.18	-0.01
8	SLU 14	666	1	3557	-1.82	21.84	-0.01
8	SLU 15	656	1	3442	-1.64	21.56	-0.01
8	SLU 16	662	1	3546	-1.81	21.71	-0.01
8	SLU 17	652	1	3431	-1.63	21.43	-0.01
8	SLU 18	692	1	3638	-1.87	22.71	-0.01
8	SLU 19	682	1	3523	-1.69	22.43	-0.01
8	SLU 20	694	1	3662	-1.88	22.78	-0.01
8	SLU 21	685	1	3547	-1.7	22.51	-0.01
8	SLU 22	631	1	3410	-1.75	20.69	-0.01
8	SLU 23	614	1	3219	-1.45	20.23	-0.01
8	SLU 24	637	1	3446	-1.77	20.89	-0.01
8	SLU 25	627	1	3331	-1.59	20.62	-0.01
8	SLU 26	617	1	3243	-1.46	20.31	-0.01
8	SLU 27	639	1	3470	-1.78	20.97	-0.01
8	SLU 28	630	1	3355	-1.6	20.69	-0.01
8	SLU 29	636	1	3460	-1.77	20.84	-0.01
8	SLU 30	626	1	3344	-1.59	20.56	-0.01
8	SLU 31	696	1	3547	-1.62	22.91	-0.01
8	SLU 32	719	1	3774	-1.94	23.56	-0.01
8	SLU 33	709	1	3659	-1.76	23.29	-0.01
8	SLU 34	699	1	3572	-1.63	22.98	-0.01
8	SLU 35	721	1	3799	-1.95	23.64	-0.01
8	SLU 36	711	1	3684	-1.77	23.36	-0.01
8	SLU 37	717	1	3788	-1.94	23.51	-0.01
8	SLU 38	708	1	3673	-1.76	23.24	-0.01
8	SLU 39	747	1	3880	-2	24.51	-0.01
8	SLU 40	737	1	3765	-1.82	24.23	-0.01
8	SLU 41	750	1	3905	-2	24.58	-0.01

Nodo	Cont.	Reazione a traslazione			Reazione a rotazione		
Ind.	N.br.	x	y	z	x	y	z
8	SLU 42	740	1	3789	-1.82	24.31	-0.01
8	SLU 43	729	1	4035	-2.07	23.94	-0.01
8	SLU 44	713	1	3844	-1.77	23.48	-0.01
8	SLU 45	735	1	4071	-2.08	24.14	-0.01
8	SLU 46	726	1	3956	-1.9	23.87	-0.01
8	SLU 47	715	1	3868	-1.78	23.56	-0.01
8	SLU 48	738	1	4095	-2.09	24.22	-0.01
8	SLU 49	728	1	3980	-1.91	23.94	-0.01
8	SLU 50	734	1	4085	-2.08	24.09	-0.01
8	SLU 51	724	1	3970	-1.9	23.81	-0.01
8	SLU 52	794	1	4172	-1.94	26.15	-0.01
8	SLU 53	817	1	4399	-2.25	26.81	-0.01
8	SLU 54	807	1	4284	-2.07	26.54	-0.01
8	SLU 55	797	1	4197	-1.95	26.23	-0.01
8	SLU 56	820	1	4424	-2.26	26.89	-0.01
8	SLU 57	810	1	4309	-2.08	26.61	-0.01
8	SLU 58	816	1	4413	-2.25	26.76	-0.01
8	SLU 59	806	1	4298	-2.07	26.48	-0.01
8	SLU 60	846	1	4505	-2.31	27.76	-0.01
8	SLU 61	836	1	4390	-2.13	27.48	-0.01
8	SLU 62	848	1	4530	-2.32	27.83	-0.01
8	SLU 63	838	1	4415	-2.14	27.56	-0.01
8	SLU 64	784	1	4278	-2.2	25.74	-0.01
8	SLU 65	768	1	4086	-1.9	25.28	-0.01
8	SLU 66	791	1	4313	-2.21	25.94	-0.01
8	SLU 67	781	1	4198	-2.03	25.67	-0.01
8	SLU 68	771	1	4110	-1.91	25.36	-0.01
8	SLU 69	793	1	4338	-2.22	26.02	-0.01
8	SLU 70	783	1	4223	-2.04	25.74	-0.01
8	SLU 71	789	1	4327	-2.21	25.89	-0.01
8	SLU 72	780	1	4212	-2.03	25.61	-0.01
8	SLU 73	850	1	4415	-2.07	27.96	-0.01
8	SLU 74	872	1	4642	-2.38	28.61	-0.01
8	SLU 75	862	1	4527	-2.2	28.34	-0.01
8	SLU 76	852	1	4439	-2.08	28.03	-0.01
8	SLU 77	875	1	4666	-2.39	28.69	-0.01
8	SLU 78	865	1	4551	-2.21	28.41	-0.01
8	SLU 79	871	1	4656	-2.38	28.56	-0.01
8	SLU 80	861	1	4541	-2.2	28.29	-0.01
8	SLU 81	901	1	4747	-2.44	29.56	-0.01
8	SLU 82	891	1	4632	-2.26	29.28	-0.01
8	SLU 83	903	1	4772	-2.45	29.63	-0.01
8	SLU 84	894	1	4657	-2.27	29.36	-0.01
8	SLE RA 1	591	1	3237	-1.66	19.41	-0.01
8	SLE RA 2	580	1	3109	-1.46	19.1	-0.01
8	SLE RA 3	595	1	3261	-1.67	19.54	-0.01
8	SLE RA 4	589	1	3184	-1.55	19.36	-0.01
8	SLE RA 5	582	1	3126	-1.47	19.15	-0.01
8	SLE RA 6	597	1	3277	-1.68	19.59	-0.01
8	SLE RA 7	591	1	3200	-1.56	19.4	-0.01
8	SLE RA 8	594	1	3270	-1.67	19.5	-0.01
8	SLE RA 9	588	1	3193	-1.55	19.32	-0.01
8	SLE RA 10	635	1	3329	-1.58	20.88	-0.01
8	SLE RA 11	650	1	3480	-1.79	21.32	-0.01
8	SLE RA 12	643	1	3403	-1.67	21.14	-0.01
8	SLE RA 13	636	1	3345	-1.58	20.93	-0.01
8	SLE RA 14	651	1	3496	-1.79	21.37	-0.01
8	SLE RA 15	645	1	3420	-1.67	21.19	-0.01
8	SLE RA 16	649	1	3489	-1.79	21.29	-0.01
8	SLE RA 17	642	1	3413	-1.67	21.1	-0.01
8	SLE RA 18	669	1	3550	-1.82	21.95	-0.01
8	SLE RA 19	662	1	3474	-1.7	21.77	-0.01
8	SLE RA 20	671	1	3567	-1.83	22	-0.01
8	SLE RA 21	664	1	3490	-1.71	21.82	-0.01
8	SLE FR 1	591	1	3237	-1.66	19.41	-0.01
8	SLE FR 2	589	1	3212	-1.62	19.35	-0.01
8	SLE FR 3	592	1	3244	-1.66	19.43	-0.01
8	SLE FR 4	612	1	3306	-1.67	20.11	-0.01
8	SLE FR 5	615	1	3338	-1.71	20.19	-0.01
8	SLE FR 6	630	1	3394	-1.74	20.68	-0.01
8	SLE QP 1	591	1	3237	-1.66	19.41	-0.01
8	SLE QP 2	614	1	3331	-1.71	20.17	-0.01
8	SLD 1	979	8	4030	-7.66	33.04	-0.02
8	SLD 2	979	8	4030	-7.66	33.04	-0.02
8	SLD 3	817	1	3422	-2.26	27.77	-0.01
8	SLD 4	817	1	3422	-2.26	27.77	-0.01
8	SLD 5	969	12	4462	-11.68	32.03	-0.03
8	SLD 6	969	12	4462	-11.68	32.03	-0.03
8	SLD 7	430	-9	2438	6.31	14.45	0.01
8	SLD 8	430	-9	2438	6.31	14.45	0.01
8	SLD 9	799	10	4225	-9.73	25.89	-0.02
8	SLD 10	799	10	4225	-9.73	25.89	-0.02
8	SLD 11	260	-11	2201	8.26	8.31	0.02
8	SLD 12	260	-11	2201	8.26	8.31	0.02
8	SLD 13	412	0	3240	-1.16	12.57	0
8	SLD 14	412	0	3240	-1.16	12.57	0
8	SLD 15	250	-6	2633	4.24	7.3	0.01
8	SLD 16	250	-6	2633	4.24	7.3	0.01
8	SLV 1	1468	17	4976	-15.64	50.29	-0.04
8	SLV 2	1468	17	4976	-15.64	50.29	-0.04

Nodo	Cont.	Reazione a traslazione			Reazione a rotazione		
Ind.	N.br.	x	y	z	x	y	z
8	SLV 3	1088	2	3539	-2.99	37.9	-0.01
8	SLV 4	1088	2	3539	-2.99	37.9	-0.01
8	SLV 5	1447	28	6004	-25.08	48	-0.06
8	SLV 6	1447	28	6004	-25.08	48	-0.06
8	SLV 7	180	-22	1214	17.09	6.7	0.03
8	SLV 8	180	-22	1214	17.09	6.7	0.03
8	SLV 9	1049	23	5449	-20.52	33.64	-0.05
8	SLV 10	1049	23	5449	-20.52	33.64	-0.05
8	SLV 11	-218	-27	658	21.66	-7.66	0.05
8	SLV 12	-218	-27	658	21.66	-7.66	0.05
8	SLV 13	141	0	3124	-0.43	2.44	0
8	SLV 14	141	0	3124	-0.43	2.44	0
8	SLV 15	-239	-15	1687	12.22	-9.95	0.03
8	SLV 16	-239	-15	1687	12.22	-9.95	0.03
9	SLU 1	495	-1	3457	-1.25	15.98	-0.02
9	SLU 2	478	-1	3256	-1.01	15.37	-0.02
9	SLU 3	501	-1	3498	-1.26	16.17	-0.02
9	SLU 4	491	-1	3377	-1.11	15.8	-0.02
9	SLU 5	481	-1	3284	-1.01	15.45	-0.02
9	SLU 6	504	-1	3525	-1.26	16.24	-0.02
9	SLU 7	493	-1	3405	-1.12	15.88	-0.02
9	SLU 8	501	-1	3512	-1.26	16.14	-0.02
9	SLU 9	490	-1	3392	-1.11	15.77	-0.02
9	SLU 10	552	-1	3632	-1.14	17.72	-0.02
9	SLU 11	575	-2	3874	-1.4	18.51	-0.02
9	SLU 12	565	-1	3753	-1.25	18.15	-0.02
9	SLU 13	554	-1	3660	-1.15	17.8	-0.02
9	SLU 14	578	-2	3901	-1.4	18.59	-0.02
9	SLU 15	567	-2	3780	-1.26	18.22	-0.02
9	SLU 16	574	-2	3888	-1.39	18.48	-0.02
9	SLU 17	564	-2	3768	-1.25	18.12	-0.02
9	SLU 18	601	-2	3994	-1.44	19.34	-0.02
9	SLU 19	590	-2	3874	-1.3	18.97	-0.02
9	SLU 20	603	-2	4022	-1.45	19.41	-0.02
9	SLU 21	593	-2	3901	-1.3	19.05	-0.02
9	SLU 22	544	-1	3732	-1.34	17.52	-0.02
9	SLU 23	526	-1	3531	-1.1	16.91	-0.02
9	SLU 24	550	-2	3773	-1.36	17.7	-0.02
9	SLU 25	539	-1	3652	-1.21	17.33	-0.02
9	SLU 26	529	-1	3558	-1.11	16.99	-0.02
9	SLU 27	552	-2	3800	-1.36	17.78	-0.02
9	SLU 28	542	-1	3679	-1.22	17.41	-0.02
9	SLU 29	549	-2	3787	-1.35	17.67	-0.02
9	SLU 30	538	-1	3666	-1.21	17.31	-0.02
9	SLU 31	600	-2	3907	-1.24	19.25	-0.02
9	SLU 32	624	-2	4148	-1.49	20.05	-0.02
9	SLU 33	613	-2	4028	-1.35	19.68	-0.02
9	SLU 34	603	-2	3934	-1.24	19.33	-0.02
9	SLU 35	626	-2	4176	-1.5	20.13	-0.02
9	SLU 36	616	-2	4055	-1.35	19.76	-0.02
9	SLU 37	623	-2	4163	-1.49	20.02	-0.02
9	SLU 38	612	-2	4042	-1.35	19.65	-0.02
9	SLU 39	649	-2	4269	-1.54	20.87	-0.02
9	SLU 40	639	-2	4148	-1.39	20.51	-0.02
9	SLU 41	652	-2	4297	-1.54	20.95	-0.02
9	SLU 42	641	-2	4176	-1.4	20.58	-0.02
9	SLU 43	627	-2	4401	-1.59	20.25	-0.02
9	SLU 44	610	-2	4199	-1.35	19.64	-0.02
9	SLU 45	633	-2	4441	-1.6	20.43	-0.02
9	SLU 46	623	-2	4320	-1.46	20.07	-0.02
9	SLU 47	613	-2	4227	-1.35	19.72	-0.02
9	SLU 48	636	-2	4468	-1.61	20.51	-0.02
9	SLU 49	625	-2	4348	-1.46	20.14	-0.02
9	SLU 50	633	-2	4456	-1.6	20.41	-0.02
9	SLU 51	622	-2	4335	-1.46	20.04	-0.02
9	SLU 52	684	-2	4575	-1.48	21.99	-0.02
9	SLU 53	707	-2	4817	-1.74	22.78	-0.02
9	SLU 54	697	-2	4696	-1.59	22.41	-0.02
9	SLU 55	686	-2	4603	-1.49	22.06	-0.02
9	SLU 56	710	-2	4844	-1.74	22.86	-0.02
9	SLU 57	699	-2	4724	-1.6	22.49	-0.02
9	SLU 58	706	-2	4831	-1.74	22.75	-0.02
9	SLU 59	696	-2	4711	-1.59	22.39	-0.02
9	SLU 60	733	-2	4938	-1.78	23.6	-0.02
9	SLU 61	722	-2	4817	-1.64	23.24	-0.02
9	SLU 62	735	-2	4965	-1.79	23.68	-0.03
9	SLU 63	725	-2	4844	-1.64	23.31	-0.02
9	SLU 64	676	-2	4675	-1.68	21.79	-0.02
9	SLU 65	658	-2	4474	-1.44	21.18	-0.02
9	SLU 66	682	-2	4716	-1.7	21.97	-0.02
9	SLU 67	671	-2	4595	-1.55	21.6	-0.02
9	SLU 68	661	-2	4501	-1.45	21.25	-0.02
9	SLU 69	684	-2	4743	-1.7	22.05	-0.02
9	SLU 70	674	-2	4622	-1.56	21.68	-0.02
9	SLU 71	681	-2	4730	-1.7	21.94	-0.02
9	SLU 72	671	-2	4609	-1.55	21.58	-0.02
9	SLU 73	732	-2	4850	-1.58	23.52	-0.02
9	SLU 74	756	-2	5092	-1.83	24.32	-0.03
9	SLU 75	745	-2	4971	-1.69	23.95	-0.03
9	SLU 76	735	-2	4877	-1.58	23.6	-0.02

Nodo	Cont.	Reazione a traslazione			Reazione a rotazione		
Ind.	N.br.	x	y	z	x	y	z
9	SLU 77	758	-2	5119	-1.84	24.39	-0.03
9	SLU 78	748	-2	4998	-1.69	24.03	-0.03
9	SLU 79	755	-2	5106	-1.83	24.29	-0.03
9	SLU 80	744	-2	4985	-1.69	23.92	-0.03
9	SLU 81	781	-2	5212	-1.88	25.14	-0.03
9	SLU 82	771	-2	5091	-1.73	24.77	-0.03
9	SLU 83	784	-2	5240	-1.88	25.22	-0.03
9	SLU 84	773	-2	5119	-1.74	24.85	-0.03
9	SLE RA 1	509	-1	3536	-1.28	16.42	-0.02
9	SLE RA 2	498	-1	3402	-1.11	16.01	-0.02
9	SLE RA 3	513	-1	3563	-1.28	16.54	-0.02
9	SLE RA 4	506	-1	3482	-1.19	16.3	-0.02
9	SLE RA 5	499	-1	3420	-1.12	16.07	-0.02
9	SLE RA 6	515	-1	3581	-1.29	16.59	-0.02
9	SLE RA 7	508	-1	3501	-1.19	16.35	-0.02
9	SLE RA 8	513	-1	3573	-1.28	16.53	-0.02
9	SLE RA 9	506	-1	3492	-1.19	16.28	-0.02
9	SLE RA 10	547	-1	3652	-1.2	17.58	-0.02
9	SLE RA 11	562	-2	3813	-1.37	18.11	-0.02
9	SLE RA 12	555	-1	3733	-1.28	17.86	-0.02
9	SLE RA 13	549	-1	3671	-1.21	17.63	-0.02
9	SLE RA 14	564	-2	3832	-1.38	18.16	-0.02
9	SLE RA 15	557	-1	3751	-1.28	17.91	-0.02
9	SLE RA 16	562	-2	3823	-1.37	18.09	-0.02
9	SLE RA 17	555	-1	3743	-1.28	17.85	-0.02
9	SLE RA 18	580	-2	3894	-1.4	18.66	-0.02
9	SLE RA 19	573	-2	3813	-1.31	18.41	-0.02
9	SLE RA 20	581	-2	3912	-1.41	18.71	-0.02
9	SLE RA 21	574	-2	3832	-1.31	18.46	-0.02
9	SLE FR 1	509	-1	3536	-1.28	16.42	-0.02
9	SLE FR 2	507	-1	3509	-1.24	16.34	-0.02
9	SLE FR 3	510	-1	3543	-1.28	16.44	-0.02
9	SLE FR 4	528	-1	3617	-1.28	17.01	-0.02
9	SLE FR 5	531	-1	3651	-1.32	17.11	-0.02
9	SLE FR 6	544	-1	3715	-1.34	17.54	-0.02
9	SLE QP 1	509	-1	3536	-1.28	16.42	-0.02
9	SLE QP 2	530	-1	3643	-1.31	17.09	-0.02
9	SLD 1	875	2	4287	-5.29	29.06	-0.03
9	SLD 2	875	2	4287	-5.29	29.06	-0.03
9	SLD 3	726	-2	3587	-1.44	24.35	-0.02
9	SLD 4	726	-2	3587	-1.44	24.35	-0.02
9	SLD 5	859	6	4899	-8.34	27.83	-0.04
9	SLD 6	859	6	4899	-8.34	27.83	-0.04
9	SLD 7	364	-8	2563	4.48	12.12	0
9	SLD 8	364	-8	2563	4.48	12.12	0
9	SLD 9	697	5	4723	-7.11	22.06	-0.04
9	SLD 10	697	5	4723	-7.11	22.06	-0.04
9	SLD 11	202	-9	2387	5.71	6.36	0
9	SLD 12	202	-9	2387	5.71	6.36	0
9	SLD 13	334	-1	3700	-1.18	9.84	-0.02
9	SLD 14	334	-1	3700	-1.18	9.84	-0.02
9	SLD 15	186	-5	2999	2.66	5.13	-0.01
9	SLD 16	186	-5	2999	2.66	5.13	-0.01
9	SLV 1	1336	8	5161	-10.63	45.08	-0.05
9	SLV 2	1336	8	5161	-10.63	45.08	-0.05
9	SLV 3	987	-2	3506	-1.6	34	-0.02
9	SLV 4	987	-2	3506	-1.6	34	-0.02
9	SLV 5	1301	16	6608	-17.79	42.28	-0.07
9	SLV 6	1301	16	6608	-17.79	42.28	-0.07
9	SLV 7	139	-16	1092	12.29	5.37	0.02
9	SLV 8	139	-16	1092	12.29	5.37	0.02
9	SLV 9	922	14	6194	-14.91	28.81	-0.06
9	SLV 10	922	14	6194	-14.91	28.81	-0.06
9	SLV 11	-240	-19	678	15.17	-8.1	0.03
9	SLV 12	-240	-19	678	15.17	-8.1	0.03
9	SLV 13	74	-1	3781	-1.02	0.18	-0.02
9	SLV 14	74	-1	3781	-1.02	0.18	-0.02
9	SLV 15	-275	-10	2126	8	-10.89	0.01
9	SLV 16	-275	-10	2126	8	-10.89	0.01
10	SLU 1	404	6	3826	-2.31	12.26	0.03
10	SLU 2	391	5	3604	-2.02	11.94	0.03
10	SLU 3	409	6	3873	-2.34	12.4	0.03
10	SLU 4	401	5	3740	-2.17	12.2	0.03
10	SLU 5	393	5	3636	-2.05	11.98	0.03
10	SLU 6	412	6	3905	-2.36	12.44	0.03
10	SLU 7	403	5	3772	-2.19	12.25	0.03
10	SLU 8	409	6	3890	-2.35	12.35	0.03
10	SLU 9	400	5	3756	-2.18	12.16	0.03
10	SLU 10	457	6	4042	-2.34	13.93	0.03
10	SLU 11	475	6	4312	-2.65	14.39	0.03
10	SLU 12	467	6	4179	-2.48	14.19	0.03
10	SLU 13	459	6	4074	-2.36	13.97	0.03
10	SLU 14	477	7	4344	-2.68	14.43	0.03
10	SLU 15	469	6	4211	-2.51	14.24	0.03
10	SLU 16	475	7	4328	-2.66	14.34	0.03
10	SLU 17	466	6	4195	-2.49	14.15	0.03
10	SLU 18	499	7	4452	-2.75	15.1	0.04
10	SLU 19	490	6	4319	-2.58	14.91	0.03
10	SLU 20	501	7	4484	-2.77	15.15	0.04
10	SLU 21	492	6	4351	-2.6	14.96	0.03

Nodo	Cont.	Reazione a traslazione			Reazione a rotazione		
Ind.	N.br.	x	y	z	x	y	z
10	SLU 22	446	6	4143	-2.53	13.49	0.03
10	SLU 23	432	6	3921	-2.25	13.17	0.03
10	SLU 24	451	6	4191	-2.57	13.63	0.03
10	SLU 25	443	6	4058	-2.4	13.43	0.03
10	SLU 26	434	6	3953	-2.27	13.21	0.03
10	SLU 27	453	6	4223	-2.59	13.67	0.03
10	SLU 28	445	6	4090	-2.42	13.48	0.03
10	SLU 29	450	6	4207	-2.57	13.58	0.03
10	SLU 30	442	6	4074	-2.4	13.39	0.03
10	SLU 31	498	6	4360	-2.56	15.16	0.03
10	SLU 32	517	7	4630	-2.88	15.62	0.04
10	SLU 33	509	7	4497	-2.71	15.42	0.04
10	SLU 34	500	6	4392	-2.58	15.2	0.03
10	SLU 35	519	7	4662	-2.9	15.66	0.04
10	SLU 36	511	7	4529	-2.73	15.47	0.04
10	SLU 37	516	7	4646	-2.88	15.57	0.04
10	SLU 38	508	7	4513	-2.71	15.38	0.04
10	SLU 39	540	7	4770	-2.98	16.33	0.04
10	SLU 40	532	7	4637	-2.8	16.14	0.04
10	SLU 41	542	7	4802	-3	16.38	0.04
10	SLU 42	534	7	4669	-2.83	16.19	0.04
10	SLU 43	511	7	4864	-2.92	15.52	0.04
10	SLU 44	498	7	4642	-2.64	15.19	0.03
10	SLU 45	517	7	4912	-2.96	15.65	0.04
10	SLU 46	508	7	4779	-2.79	15.46	0.04
10	SLU 47	500	7	4674	-2.66	15.24	0.03
10	SLU 48	519	7	4944	-2.98	15.7	0.04
10	SLU 49	510	7	4811	-2.81	15.51	0.04
10	SLU 50	516	7	4928	-2.97	15.61	0.04
10	SLU 51	507	7	4795	-2.8	15.42	0.04
10	SLU 52	564	7	5081	-2.95	17.18	0.04
10	SLU 53	582	8	5351	-3.27	17.64	0.04
10	SLU 54	574	8	5218	-3.1	17.45	0.04
10	SLU 55	566	7	5113	-2.97	17.23	0.04
10	SLU 56	585	8	5383	-3.29	17.69	0.04
10	SLU 57	576	8	5250	-3.12	17.5	0.04
10	SLU 58	582	8	5367	-3.28	17.6	0.04
10	SLU 59	573	8	5234	-3.11	17.41	0.04
10	SLU 60	606	8	5491	-3.37	18.36	0.04
10	SLU 61	597	8	5358	-3.2	18.17	0.04
10	SLU 62	608	8	5523	-3.39	18.41	0.04
10	SLU 63	600	8	5390	-3.22	18.21	0.04
10	SLU 64	553	8	5182	-3.15	16.74	0.04
10	SLU 65	539	7	4960	-2.86	16.42	0.04
10	SLU 66	558	8	5230	-3.18	16.88	0.04
10	SLU 67	550	7	5097	-3.01	16.69	0.04
10	SLU 68	541	7	4992	-2.88	16.47	0.04
10	SLU 69	560	8	5262	-3.2	16.93	0.04
10	SLU 70	552	7	5129	-3.03	16.73	0.04
10	SLU 71	557	8	5246	-3.19	16.84	0.04
10	SLU 72	549	7	5113	-3.02	16.64	0.04
10	SLU 73	605	8	5399	-3.17	18.41	0.04
10	SLU 74	624	9	5669	-3.49	18.87	0.04
10	SLU 75	616	8	5535	-3.32	18.68	0.04
10	SLU 76	607	8	5431	-3.2	18.46	0.04
10	SLU 77	626	9	5701	-3.51	18.92	0.05
10	SLU 78	618	8	5567	-3.34	18.73	0.04
10	SLU 79	623	9	5685	-3.5	18.83	0.05
10	SLU 80	615	8	5552	-3.33	18.64	0.04
10	SLU 81	647	9	5809	-3.59	19.59	0.05
10	SLU 82	639	8	5676	-3.42	19.4	0.04
10	SLU 83	649	9	5841	-3.61	19.64	0.05
10	SLU 84	641	8	5708	-3.44	19.44	0.04
10	SLE RA 1	416	6	3916	-2.37	12.61	0.03
10	SLE RA 2	407	5	3768	-2.18	12.39	0.03
10	SLE RA 3	420	6	3948	-2.4	12.7	0.03
10	SLE RA 4	414	6	3860	-2.28	12.57	0.03
10	SLE RA 5	408	5	3790	-2.2	12.43	0.03
10	SLE RA 6	421	6	3970	-2.41	12.73	0.03
10	SLE RA 7	415	6	3881	-2.3	12.6	0.03
10	SLE RA 8	419	6	3959	-2.4	12.67	0.03
10	SLE RA 9	414	6	3870	-2.29	12.54	0.03
10	SLE RA 10	451	6	4061	-2.39	13.72	0.03
10	SLE RA 11	464	6	4241	-2.6	14.03	0.03
10	SLE RA 12	458	6	4152	-2.49	13.9	0.03
10	SLE RA 13	452	6	4082	-2.4	13.75	0.03
10	SLE RA 14	465	6	4262	-2.62	14.06	0.03
10	SLE RA 15	459	6	4173	-2.5	13.93	0.03
10	SLE RA 16	463	6	4251	-2.61	14	0.03
10	SLE RA 17	457	6	4163	-2.49	13.87	0.03
10	SLE RA 18	479	7	4334	-2.67	14.51	0.03
10	SLE RA 19	474	6	4245	-2.55	14.38	0.03
10	SLE RA 20	480	7	4355	-2.68	14.54	0.03
10	SLE RA 21	475	6	4267	-2.57	14.41	0.03
10	SLE FR 1	416	6	3916	-2.37	12.61	0.03
10	SLE FR 2	414	6	3887	-2.33	12.57	0.03
10	SLE FR 3	417	6	3925	-2.38	12.62	0.03
10	SLE FR 4	433	6	4012	-2.42	13.14	0.03
10	SLE FR 5	436	6	4050	-2.47	13.19	0.03
10	SLE FR 6	448	6	4125	-2.52	13.56	0.03

Nodo	Cont.	Reazione a traslazione			Reazione a rotazione		
Ind.	N.br.	x	y	z	x	y	z
10	SLE QP 1	416	6	3916	-2.37	12.61	0.03
10	SLE QP 2	435	6	4042	-2.46	13.18	0.03
10	SLD 1	766	6	4666	-4.68	24.6	0.03
10	SLD 2	766	6	4666	-4.68	24.6	0.03
10	SLD 3	635	3	3836	-2.26	20.7	0.02
10	SLD 4	635	3	3836	-2.26	20.7	0.02
10	SLD 5	732	11	5487	-6.79	22.52	0.05
10	SLD 6	732	11	5487	-6.79	22.52	0.05
10	SLD 7	298	0	2722	1.27	9.52	0.01
10	SLD 8	298	0	2722	1.27	9.52	0.01
10	SLD 9	573	12	5361	-6.19	16.83	0.05
10	SLD 10	573	12	5361	-6.19	16.83	0.05
10	SLD 11	138	1	2597	1.87	3.84	0.01
10	SLD 12	138	1	2597	1.87	3.84	0.01
10	SLD 13	235	9	4247	-2.66	5.65	0.04
10	SLD 14	235	9	4247	-2.66	5.65	0.04
10	SLD 15	104	6	3418	-0.24	1.76	0.03
10	SLD 16	104	6	3418	-0.24	1.76	0.03
10	SLV 1	1208	6	5513	-7.66	39.89	0.03
10	SLV 2	1208	6	5513	-7.66	39.89	0.03
10	SLV 3	902	-2	3557	-1.97	30.72	0.01
10	SLV 4	902	-2	3557	-1.97	30.72	0.01
10	SLV 5	1132	18	7449	-12.64	35.1	0.07
10	SLV 6	1132	18	7449	-12.64	35.1	0.07
10	SLV 7	110	-8	930	6.31	4.53	-0.02
10	SLV 8	110	-8	930	6.31	4.53	-0.02
10	SLV 9	760	20	7153	-11.23	21.82	0.08
10	SLV 10	760	20	7153	-11.23	21.82	0.08
10	SLV 11	-262	-6	634	7.72	-8.74	-0.01
10	SLV 12	-262	-6	634	7.72	-8.74	-0.01
10	SLV 13	-32	14	4526	-2.95	-4.37	0.06
10	SLV 14	-32	14	4526	-2.95	-4.37	0.06
10	SLV 15	-338	6	2571	2.74	-13.54	0.03
10	SLV 16	-338	6	2571	2.74	-13.54	0.03
11	SLU 1	130	1258	6993	-33.84	5.3	-0.12
11	SLU 2	135	1162	6570	-30.97	5.35	-0.13
11	SLU 3	130	1279	7088	-34.45	5.32	-0.13
11	SLU 4	133	1221	6835	-32.73	5.35	-0.13
11	SLU 5	134	1175	6633	-31.35	5.33	-0.13
11	SLU 6	129	1292	7151	-34.83	5.3	-0.13
11	SLU 7	132	1234	6897	-33.11	5.33	-0.13
11	SLU 8	128	1284	7118	-34.6	5.26	-0.13
11	SLU 9	131	1227	6864	-32.88	5.29	-0.13
11	SLU 10	164	1334	7423	-35.89	6.43	-0.15
11	SLU 11	160	1450	7941	-39.38	6.4	-0.15
11	SLU 12	162	1393	7687	-37.65	6.43	-0.15
11	SLU 13	163	1347	7486	-36.27	6.41	-0.15
11	SLU 14	159	1463	8003	-39.75	6.38	-0.15
11	SLU 15	161	1406	7750	-38.03	6.41	-0.15
11	SLU 16	157	1456	7971	-39.53	6.34	-0.15
11	SLU 17	160	1398	7717	-37.8	6.37	-0.15
11	SLU 18	172	1503	8212	-40.88	6.85	-0.16
11	SLU 19	175	1446	7958	-39.15	6.88	-0.16
11	SLU 20	171	1516	8274	-41.26	6.83	-0.16
11	SLU 21	174	1459	8020	-39.53	6.86	-0.16
11	SLU 22	143	1383	7607	-37.46	5.82	-0.14
11	SLU 23	148	1287	7184	-34.59	5.87	-0.15
11	SLU 24	143	1404	7702	-38.07	5.84	-0.14
11	SLU 25	146	1346	7448	-36.34	5.87	-0.15
11	SLU 26	147	1300	7246	-34.97	5.85	-0.15
11	SLU 27	142	1417	7764	-38.45	5.82	-0.15
11	SLU 28	145	1359	7510	-36.72	5.85	-0.15
11	SLU 29	141	1409	7732	-38.22	5.77	-0.14
11	SLU 30	144	1352	7478	-36.49	5.8	-0.15
11	SLU 31	177	1459	8037	-39.51	6.95	-0.17
11	SLU 32	172	1575	8555	-42.99	6.92	-0.17
11	SLU 33	175	1518	8301	-41.27	6.95	-0.17
11	SLU 34	176	1472	8099	-39.89	6.93	-0.17
11	SLU 35	171	1588	8617	-43.37	6.9	-0.17
11	SLU 36	174	1531	8363	-41.65	6.93	-0.17
11	SLU 37	170	1581	8584	-43.14	6.86	-0.17
11	SLU 38	173	1523	8331	-41.42	6.89	-0.17
11	SLU 39	185	1629	8825	-44.49	7.37	-0.17
11	SLU 40	188	1571	8571	-42.77	7.4	-0.18
11	SLU 41	184	1642	8887	-44.87	7.34	-0.17
11	SLU 42	187	1584	8634	-43.15	7.37	-0.18
11	SLU 43	164	1593	8881	-42.75	6.71	-0.15
11	SLU 44	169	1497	8458	-39.88	6.76	-0.16
11	SLU 45	165	1613	8976	-43.36	6.73	-0.16
11	SLU 46	168	1556	8722	-41.64	6.76	-0.16
11	SLU 47	168	1510	8520	-40.26	6.74	-0.16
11	SLU 48	164	1626	9038	-43.74	6.71	-0.16
11	SLU 49	167	1569	8785	-42.02	6.74	-0.16
11	SLU 50	162	1619	9006	-43.51	6.67	-0.16
11	SLU 51	165	1561	8752	-41.79	6.7	-0.16
11	SLU 52	199	1668	9311	-44.8	7.85	-0.18
11	SLU 53	194	1785	9829	-48.29	7.82	-0.18
11	SLU 54	197	1727	9575	-46.56	7.85	-0.18
11	SLU 55	198	1681	9373	-45.18	7.82	-0.18
11	SLU 56	193	1798	9891	-48.67	7.79	-0.18

Nodo	Cont.	Reazione a traslazione			Reazione a rotazione		
Ind.	N.br.	x	y	z	x	y	z
11	SLU 57	196	1740	9637	-46.94	7.82	-0.19
11	SLU 58	192	1790	9859	-48.44	7.75	-0.18
11	SLU 59	195	1733	9605	-46.71	7.78	-0.18
11	SLU 60	207	1838	10099	-49.79	8.26	-0.19
11	SLU 61	210	1780	9845	-48.06	8.29	-0.19
11	SLU 62	206	1851	10162	-50.17	8.24	-0.19
11	SLU 63	209	1793	9908	-48.44	8.27	-0.19
11	SLU 64	177	1718	9494	-46.37	7.23	-0.17
11	SLU 65	182	1622	9071	-43.5	7.28	-0.18
11	SLU 66	177	1738	9589	-46.98	7.25	-0.17
11	SLU 67	180	1681	9336	-45.26	7.28	-0.18
11	SLU 68	181	1635	9134	-43.88	7.26	-0.18
11	SLU 69	176	1751	9652	-47.36	7.23	-0.18
11	SLU 70	179	1694	9398	-45.64	7.26	-0.18
11	SLU 71	175	1744	9619	-47.13	7.19	-0.18
11	SLU 72	178	1686	9365	-45.41	7.22	-0.18
11	SLU 73	212	1793	9924	-48.42	8.37	-0.2
11	SLU 74	207	1910	10442	-51.9	8.34	-0.2
11	SLU 75	210	1852	10188	-50.18	8.36	-0.2
11	SLU 76	211	1806	9987	-48.8	8.34	-0.2
11	SLU 77	206	1923	10505	-52.28	8.31	-0.2
11	SLU 78	209	1865	10251	-50.56	8.34	-0.2
11	SLU 79	205	1915	10472	-52.05	8.27	-0.2
11	SLU 80	208	1858	10218	-50.33	8.3	-0.2
11	SLU 81	219	1963	10713	-53.41	8.78	-0.2
11	SLU 82	222	1905	10459	-51.68	8.81	-0.21
11	SLU 83	218	1976	10775	-53.78	8.76	-0.21
11	SLU 84	221	1918	10521	-52.06	8.79	-0.21
11	SLE RA 1	134	1294	7169	-34.88	5.45	-0.13
11	SLE RA 2	137	1230	6887	-32.96	5.48	-0.13
11	SLE RA 3	134	1308	7232	-35.28	5.46	-0.13
11	SLE RA 4	136	1269	7063	-34.13	5.48	-0.13
11	SLE RA 5	136	1239	6928	-33.21	5.47	-0.13
11	SLE RA 6	133	1316	7274	-35.53	5.45	-0.13
11	SLE RA 7	135	1278	7104	-34.39	5.47	-0.13
11	SLE RA 8	132	1311	7252	-35.38	5.42	-0.13
11	SLE RA 9	134	1273	7083	-34.23	5.44	-0.13
11	SLE RA 10	157	1344	7455	-36.24	6.2	-0.15
11	SLE RA 11	153	1422	7800	-38.56	6.18	-0.15
11	SLE RA 12	155	1384	7631	-37.41	6.2	-0.15
11	SLE RA 13	156	1353	7497	-36.5	6.19	-0.15
11	SLE RA 14	153	1431	7842	-38.82	6.17	-0.15
11	SLE RA 15	155	1392	7673	-37.67	6.19	-0.15
11	SLE RA 16	152	1426	7820	-38.66	6.14	-0.15
11	SLE RA 17	154	1387	7651	-37.51	6.16	-0.15
11	SLE RA 18	162	1457	7981	-39.56	6.48	-0.15
11	SLE RA 19	164	1419	7812	-38.42	6.5	-0.15
11	SLE RA 20	161	1466	8022	-39.82	6.47	-0.15
11	SLE RA 21	163	1428	7853	-38.67	6.49	-0.15
11	SLE FR 1	134	1294	7169	-34.88	5.45	-0.13
11	SLE FR 2	134	1281	7112	-34.49	5.46	-0.13
11	SLE FR 3	133	1297	7185	-34.98	5.44	-0.13
11	SLE FR 4	143	1330	7356	-35.9	5.77	-0.14
11	SLE FR 5	142	1346	7429	-36.38	5.75	-0.14
11	SLE FR 6	148	1376	7575	-37.22	5.96	-0.14
11	SLE QP 1	134	1294	7169	-34.88	5.45	-0.13
11	SLE QP 2	142	1343	7412	-36.28	5.76	-0.13
11	SLD 1	449	1406	7842	-37.67	16.63	-0.28
11	SLD 2	449	1406	7842	-37.67	16.63	-0.28
11	SLD 3	406	1006	6171	-25.17	14.95	-0.17
11	SLD 4	406	1006	6171	-25.17	14.95	-0.17
11	SLD 5	300	1968	10076	-55.66	11.56	-0.34
11	SLD 6	300	1968	10076	-55.66	11.56	-0.34
11	SLD 7	155	636	4505	-13.98	5.98	0.02
11	SLD 8	155	636	4505	-13.98	5.98	0.02
11	SLD 9	129	2050	10319	-58.58	5.54	-0.29
11	SLD 10	129	2050	10319	-58.58	5.54	-0.29
11	SLD 11	-16	718	4749	-16.9	-0.04	0.08
11	SLD 12	-16	718	4749	-16.9	-0.04	0.08
11	SLD 13	-122	1680	8654	-47.4	-3.44	-0.1
11	SLD 14	-122	1680	8654	-47.4	-3.44	-0.1
11	SLD 15	-165	1280	6983	-34.9	-5.11	0.01
11	SLD 16	-165	1280	6983	-34.9	-5.11	0.01
11	SLV 1	860	1491	8425	-39.56	31.15	-0.47
11	SLV 2	860	1491	8425	-39.56	31.15	-0.47
11	SLV 3	757	551	4488	-10.17	27.19	-0.21
11	SLV 4	757	551	4488	-10.17	27.19	-0.21
11	SLV 5	514	2813	13687	-81.85	19.38	-0.63
11	SLV 6	514	2813	13687	-81.85	19.38	-0.63
11	SLV 7	170	-321	564	16.14	6.18	0.24
11	SLV 8	170	-321	564	16.14	6.18	0.24
11	SLV 9	114	3007	14260	-88.7	5.34	-0.51
11	SLV 10	114	3007	14260	-88.7	5.34	-0.51
11	SLV 11	-230	-127	1138	9.29	-7.87	0.36
11	SLV 12	-230	-127	1138	9.29	-7.87	0.36
11	SLV 13	-473	2135	10336	-62.4	-15.68	-0.06
11	SLV 14	-473	2135	10336	-62.4	-15.68	-0.06
11	SLV 15	-576	1195	6400	-33	-19.64	0.2
11	SLV 16	-576	1195	6400	-33	-19.64	0.2
12	SLU 1	-129	7	4180	-3.51	-2.69	-0.05

Nodo	Cont.	Reazione a traslazione			Reazione a rotazione		
Ind.	N.br.	x	y	z	x	y	z
12	SLU 2	-106	6	3958	-3.31	-2.05	-0.04
12	SLU 3	-134	7	4233	-3.58	-2.83	-0.05
12	SLU 4	-120	7	4100	-3.46	-2.44	-0.05
12	SLU 5	-110	7	3993	-3.35	-2.18	-0.05
12	SLU 6	-139	7	4269	-3.62	-2.96	-0.05
12	SLU 7	-125	7	4135	-3.5	-2.57	-0.05
12	SLU 8	-138	7	4251	-3.59	-2.95	-0.05
12	SLU 9	-124	7	4117	-3.48	-2.57	-0.05
12	SLU 10	-111	8	4460	-3.84	-2.04	-0.05
12	SLU 11	-140	8	4736	-4.11	-2.82	-0.06
12	SLU 12	-126	8	4603	-3.99	-2.43	-0.05
12	SLU 13	-116	8	4496	-3.89	-2.17	-0.05
12	SLU 14	-144	8	4771	-4.15	-2.95	-0.06
12	SLU 15	-130	8	4638	-4.03	-2.56	-0.05
12	SLU 16	-144	8	4753	-4.13	-2.94	-0.06
12	SLU 17	-130	8	4620	-4.01	-2.56	-0.05
12	SLU 18	-137	8	4899	-4.27	-2.68	-0.06
12	SLU 19	-123	8	4765	-4.15	-2.29	-0.06
12	SLU 20	-142	9	4934	-4.31	-2.81	-0.06
12	SLU 21	-128	8	4800	-4.19	-2.42	-0.06
12	SLU 22	-144	8	4533	-3.91	-3.01	-0.05
12	SLU 23	-120	7	4310	-3.71	-2.36	-0.05
12	SLU 24	-149	8	4586	-3.98	-3.14	-0.05
12	SLU 25	-135	8	4452	-3.86	-2.76	-0.05
12	SLU 26	-125	7	4345	-3.75	-2.5	-0.05
12	SLU 27	-153	8	4621	-4.02	-3.27	-0.05
12	SLU 28	-139	8	4487	-3.9	-2.89	-0.05
12	SLU 29	-153	8	4603	-3.99	-3.27	-0.05
12	SLU 30	-139	8	4470	-3.88	-2.88	-0.05
12	SLU 31	-126	9	4813	-4.24	-2.35	-0.06
12	SLU 32	-155	9	5089	-4.51	-3.13	-0.06
12	SLU 33	-140	9	4955	-4.39	-2.75	-0.06
12	SLU 34	-131	9	4848	-4.29	-2.49	-0.06
12	SLU 35	-159	9	5124	-4.55	-3.26	-0.06
12	SLU 36	-145	9	4990	-4.43	-2.88	-0.06
12	SLU 37	-159	9	5106	-4.53	-3.26	-0.06
12	SLU 38	-144	9	4972	-4.41	-2.87	-0.06
12	SLU 39	-152	9	5251	-4.67	-2.99	-0.06
12	SLU 40	-138	9	5117	-4.55	-2.61	-0.06
12	SLU 41	-157	9	5286	-4.71	-3.12	-0.06
12	SLU 42	-142	9	5153	-4.59	-2.74	-0.06
12	SLU 43	-163	8	5314	-4.42	-3.39	-0.06
12	SLU 44	-139	8	5091	-4.23	-2.75	-0.06
12	SLU 45	-168	9	5367	-4.49	-3.52	-0.06
12	SLU 46	-154	8	5233	-4.37	-3.14	-0.06
12	SLU 47	-144	8	5126	-4.27	-2.88	-0.06
12	SLU 48	-172	9	5402	-4.53	-3.66	-0.06
12	SLU 49	-158	9	5268	-4.42	-3.27	-0.06
12	SLU 50	-172	9	5384	-4.51	-3.65	-0.06
12	SLU 51	-158	8	5250	-4.39	-3.26	-0.06
12	SLU 52	-145	9	5594	-4.76	-2.74	-0.06
12	SLU 53	-174	10	5869	-5.02	-3.51	-0.07
12	SLU 54	-160	10	5736	-4.9	-3.13	-0.07
12	SLU 55	-150	10	5629	-4.8	-2.87	-0.06
12	SLU 56	-178	10	5905	-5.07	-3.65	-0.07
12	SLU 57	-164	10	5771	-4.95	-3.26	-0.07
12	SLU 58	-178	10	5887	-5.04	-3.64	-0.07
12	SLU 59	-163	10	5753	-4.92	-3.26	-0.07
12	SLU 60	-171	10	6032	-5.18	-3.37	-0.07
12	SLU 61	-157	10	5898	-5.06	-2.99	-0.07
12	SLU 62	-176	10	6067	-5.22	-3.51	-0.07
12	SLU 63	-161	10	5933	-5.11	-3.12	-0.07
12	SLU 64	-178	9	5666	-4.82	-3.7	-0.07
12	SLU 65	-154	9	5443	-4.63	-3.06	-0.06
12	SLU 66	-183	10	5719	-4.89	-3.84	-0.07
12	SLU 67	-169	9	5586	-4.77	-3.46	-0.06
12	SLU 68	-159	9	5479	-4.67	-3.19	-0.06
12	SLU 69	-187	10	5754	-4.93	-3.97	-0.07
12	SLU 70	-173	9	5621	-4.82	-3.59	-0.07
12	SLU 71	-187	10	5736	-4.91	-3.97	-0.07
12	SLU 72	-172	9	5603	-4.79	-3.58	-0.06
12	SLU 73	-160	10	5946	-5.16	-3.05	-0.07
12	SLU 74	-188	11	6222	-5.42	-3.83	-0.07
12	SLU 75	-174	11	6088	-5.3	-3.45	-0.07
12	SLU 76	-164	10	5981	-5.2	-3.18	-0.07
12	SLU 77	-193	11	6257	-5.47	-3.96	-0.07
12	SLU 78	-179	11	6123	-5.35	-3.58	-0.07
12	SLU 79	-192	11	6239	-5.44	-3.96	-0.07
12	SLU 80	-178	11	6106	-5.32	-3.57	-0.07
12	SLU 81	-186	11	6384	-5.58	-3.69	-0.08
12	SLU 82	-172	11	6251	-5.46	-3.31	-0.07
12	SLU 83	-190	11	6420	-5.62	-3.82	-0.08
12	SLU 84	-176	11	6286	-5.51	-3.44	-0.07
12	SLE RA 1	-133	7	4281	-3.62	-2.78	-0.05
12	SLE RA 2	-118	7	4133	-3.49	-2.35	-0.05
12	SLE RA 3	-137	7	4317	-3.67	-2.87	-0.05
12	SLE RA 4	-127	7	4227	-3.59	-2.61	-0.05
12	SLE RA 5	-121	7	4156	-3.52	-2.44	-0.05
12	SLE RA 6	-140	7	4340	-3.7	-2.96	-0.05
12	SLE RA 7	-130	7	4251	-3.62	-2.7	-0.05

Nodo	Cont.	Reazione a traslazione			Reazione a rotazione		
Ind.	N.br.	x	y	z	x	y	z
12	SLE RA 8	-139	7	4328	-3.68	-2.95	-0.05
12	SLE RA 9	-130	7	4239	-3.6	-2.7	-0.05
12	SLE RA 10	-122	8	4468	-3.84	-2.35	-0.05
12	SLE RA 11	-141	8	4652	-4.02	-2.86	-0.05
12	SLE RA 12	-131	8	4563	-3.94	-2.61	-0.05
12	SLE RA 13	-125	8	4491	-3.87	-2.43	-0.05
12	SLE RA 14	-144	8	4675	-4.05	-2.95	-0.06
12	SLE RA 15	-134	8	4586	-3.97	-2.7	-0.05
12	SLE RA 16	-143	8	4663	-4.03	-2.95	-0.05
12	SLE RA 17	-134	8	4574	-3.96	-2.69	-0.05
12	SLE RA 18	-139	8	4760	-4.13	-2.77	-0.06
12	SLE RA 19	-129	8	4671	-4.05	-2.51	-0.05
12	SLE RA 20	-142	8	4783	-4.16	-2.86	-0.06
12	SLE RA 21	-132	8	4694	-4.08	-2.6	-0.06
12	SLE FR 1	-133	7	4281	-3.62	-2.78	-0.05
12	SLE FR 2	-130	7	4251	-3.59	-2.69	-0.05
12	SLE FR 3	-135	7	4291	-3.63	-2.81	-0.05
12	SLE FR 4	-132	7	4395	-3.75	-2.69	-0.05
12	SLE FR 5	-136	7	4434	-3.78	-2.81	-0.05
12	SLE FR 6	-136	8	4521	-3.87	-2.77	-0.05
12	SLE QP 1	-133	7	4281	-3.62	-2.78	-0.05
12	SLE QP 2	-135	7	4425	-3.77	-2.78	-0.05
12	SLD 1	163	5	4686	-3.89	7.58	-0.05
12	SLD 2	163	5	4686	-3.89	7.58	-0.05
12	SLD 3	222	4	3784	-1.8	8.98	-0.04
12	SLD 4	222	4	3784	-1.8	8.98	-0.04
12	SLD 5	-135	9	5871	-6.98	-1.8	-0.07
12	SLD 6	-135	9	5871	-6.98	-1.8	-0.07
12	SLD 7	61	4	2865	-0.01	2.88	-0.03
12	SLD 8	61	4	2865	-0.01	2.88	-0.03
12	SLD 9	-331	10	5985	-7.53	-8.43	-0.08
12	SLD 10	-331	10	5985	-7.53	-8.43	-0.08
12	SLD 11	-136	6	2979	-0.57	-3.76	-0.03
12	SLD 12	-136	6	2979	-0.57	-3.76	-0.03
12	SLD 13	-492	11	5066	-5.74	-14.53	-0.06
12	SLD 14	-492	11	5066	-5.74	-14.53	-0.06
12	SLD 15	-433	10	4164	-3.65	-13.13	-0.05
12	SLD 16	-433	10	4164	-3.65	-13.13	-0.05
12	SLV 1	560	2	5040	-4.04	21.36	-0.05
12	SLV 2	560	2	5040	-4.04	21.36	-0.05
12	SLV 3	698	-1	2915	0.84	24.69	-0.02
12	SLV 4	698	-1	2915	0.84	24.69	-0.02
12	SLV 5	-137	10	7832	-11.26	-0.58	-0.1
12	SLV 6	-137	10	7832	-11.26	-0.58	-0.1
12	SLV 7	325	0	750	5.02	10.51	0
12	SLV 8	325	0	750	5.02	10.51	0
12	SLV 9	-595	14	8100	-12.57	-16.06	-0.11
12	SLV 10	-595	14	8100	-12.57	-16.06	-0.11
12	SLV 11	-133	4	1018	3.72	-4.97	0
12	SLV 12	-133	4	1018	3.72	-4.97	0
12	SLV 13	-968	16	5934	-8.39	-30.24	-0.08
12	SLV 14	-968	16	5934	-8.39	-30.24	-0.08
12	SLV 15	-830	13	3810	-3.5	-26.91	-0.05
12	SLV 16	-830	13	3810	-3.5	-26.91	-0.05
13	SLU 1	-110	2	3796	-3.01	-2.33	0.02
13	SLU 2	-93	2	3612	-2.93	-1.89	0.02
13	SLU 3	-115	2	3841	-3.07	-2.45	0.02
13	SLU 4	-104	2	3731	-3.02	-2.19	0.02
13	SLU 5	-97	2	3642	-2.97	-2.01	0.02
13	SLU 6	-119	2	3872	-3.1	-2.57	0.02
13	SLU 7	-109	2	3761	-3.06	-2.31	0.02
13	SLU 8	-119	2	3856	-3.08	-2.57	0.02
13	SLU 9	-108	2	3746	-3.03	-2.31	0.02
13	SLU 10	-96	3	4072	-3.36	-1.86	0.02
13	SLU 11	-118	3	4302	-3.5	-2.42	0.02
13	SLU 12	-107	3	4191	-3.45	-2.16	0.02
13	SLU 13	-100	3	4102	-3.4	-1.98	0.02
13	SLU 14	-122	3	4332	-3.54	-2.54	0.02
13	SLU 15	-112	3	4222	-3.49	-2.28	0.02
13	SLU 16	-122	3	4316	-3.52	-2.54	0.02
13	SLU 17	-111	3	4206	-3.47	-2.28	0.02
13	SLU 18	-114	3	4453	-3.63	-2.29	0.02
13	SLU 19	-104	3	4343	-3.58	-2.03	0.02
13	SLU 20	-119	3	4483	-3.67	-2.41	0.02
13	SLU 21	-108	3	4373	-3.62	-2.15	0.02
13	SLU 22	-122	3	4109	-3.35	-2.59	0.02
13	SLU 23	-104	3	3925	-3.27	-2.15	0.02
13	SLU 24	-126	3	4155	-3.41	-2.71	0.02
13	SLU 25	-116	3	4045	-3.36	-2.45	0.02
13	SLU 26	-109	3	3956	-3.31	-2.27	0.02
13	SLU 27	-131	3	4185	-3.44	-2.83	0.02
13	SLU 28	-120	3	4075	-3.4	-2.57	0.02
13	SLU 29	-130	3	4170	-3.42	-2.83	0.02
13	SLU 30	-120	3	4059	-3.37	-2.57	0.02
13	SLU 31	-108	3	4386	-3.7	-2.12	0.02
13	SLU 32	-129	3	4615	-3.84	-2.68	0.03
13	SLU 33	-119	3	4505	-3.79	-2.42	0.02
13	SLU 34	-112	3	4416	-3.74	-2.24	0.02
13	SLU 35	-134	3	4645	-3.88	-2.8	0.03
13	SLU 36	-123	3	4535	-3.83	-2.54	0.02

Nodo	Cont.	Reazione a traslazione			Reazione a rotazione		
Ind.	N.br.	x	y	z	x	y	z
13	SLU 37	-133	3	4630	-3.86	-2.8	0.03
13	SLU 38	-123	3	4520	-3.81	-2.54	0.02
13	SLU 39	-126	3	4767	-3.97	-2.55	0.03
13	SLU 40	-116	3	4656	-3.92	-2.29	0.03
13	SLU 41	-130	3	4797	-4.01	-2.67	0.03
13	SLU 42	-120	3	4687	-3.96	-2.41	0.03
13	SLU 43	-139	3	4827	-3.79	-2.94	0.03
13	SLU 44	-122	3	4643	-3.71	-2.5	0.02
13	SLU 45	-144	3	4873	-3.85	-3.06	0.03
13	SLU 46	-133	3	4763	-3.8	-2.8	0.03
13	SLU 47	-126	3	4674	-3.75	-2.62	0.02
13	SLU 48	-148	3	4903	-3.89	-3.18	0.03
13	SLU 49	-138	3	4793	-3.84	-2.92	0.03
13	SLU 50	-148	3	4888	-3.87	-3.18	0.03
13	SLU 51	-137	3	4777	-3.82	-2.92	0.03
13	SLU 52	-125	3	5104	-4.15	-2.47	0.03
13	SLU 53	-147	3	5333	-4.29	-3.03	0.03
13	SLU 54	-136	3	5223	-4.24	-2.77	0.03
13	SLU 55	-129	3	5134	-4.19	-2.59	0.03
13	SLU 56	-151	3	5363	-4.32	-3.15	0.03
13	SLU 57	-141	3	5253	-4.28	-2.89	0.03
13	SLU 58	-151	3	5348	-4.3	-3.15	0.03
13	SLU 59	-140	3	5238	-4.25	-2.89	0.03
13	SLU 60	-143	3	5485	-4.41	-2.9	0.03
13	SLU 61	-133	3	5374	-4.37	-2.64	0.03
13	SLU 62	-148	3	5515	-4.45	-3.02	0.03
13	SLU 63	-137	4	5405	-4.4	-2.76	0.03
13	SLU 64	-151	3	5140	-4.13	-3.2	0.03
13	SLU 65	-133	3	4957	-4.05	-2.76	0.03
13	SLU 66	-155	3	5186	-4.19	-3.32	0.03
13	SLU 67	-145	3	5076	-4.14	-3.06	0.03
13	SLU 68	-138	3	4987	-4.09	-2.88	0.03
13	SLU 69	-160	3	5216	-4.23	-3.44	0.03
13	SLU 70	-149	3	5106	-4.18	-3.18	0.03
13	SLU 71	-159	3	5201	-4.21	-3.44	0.03
13	SLU 72	-149	3	5091	-4.16	-3.18	0.03
13	SLU 73	-137	4	5417	-4.49	-2.73	0.03
13	SLU 74	-158	4	5646	-4.63	-3.29	0.03
13	SLU 75	-148	4	5536	-4.58	-3.03	0.03
13	SLU 76	-141	4	5447	-4.53	-2.85	0.03
13	SLU 77	-163	4	5677	-4.66	-3.41	0.03
13	SLU 78	-152	4	5566	-4.62	-3.15	0.03
13	SLU 79	-162	4	5661	-4.64	-3.41	0.03
13	SLU 80	-152	4	5551	-4.6	-3.15	0.03
13	SLU 81	-155	4	5798	-4.75	-3.16	0.03
13	SLU 82	-145	4	5688	-4.71	-2.89	0.03
13	SLU 83	-159	4	5828	-4.79	-3.28	0.03
13	SLU 84	-149	4	5718	-4.74	-3.02	0.03
13	SLE RA 1	-113	2	3885	-3.1	-2.4	0.02
13	SLE RA 2	-102	2	3763	-3.05	-2.11	0.02
13	SLE RA 3	-116	2	3916	-3.14	-2.49	0.02
13	SLE RA 4	-110	2	3842	-3.11	-2.31	0.02
13	SLE RA 5	-105	2	3783	-3.08	-2.19	0.02
13	SLE RA 6	-119	2	3936	-3.17	-2.57	0.02
13	SLE RA 7	-112	2	3862	-3.14	-2.39	0.02
13	SLE RA 8	-119	2	3926	-3.15	-2.56	0.02
13	SLE RA 9	-112	2	3852	-3.12	-2.39	0.02
13	SLE RA 10	-104	3	4070	-3.34	-2.09	0.02
13	SLE RA 11	-118	3	4223	-3.43	-2.47	0.02
13	SLE RA 12	-112	3	4149	-3.4	-2.29	0.02
13	SLE RA 13	-107	3	4090	-3.37	-2.17	0.02
13	SLE RA 14	-121	3	4243	-3.46	-2.55	0.02
13	SLE RA 15	-114	3	4169	-3.43	-2.37	0.02
13	SLE RA 16	-121	3	4232	-3.44	-2.54	0.02
13	SLE RA 17	-114	3	4159	-3.41	-2.37	0.02
13	SLE RA 18	-116	3	4324	-3.52	-2.37	0.02
13	SLE RA 19	-109	3	4250	-3.49	-2.2	0.02
13	SLE RA 20	-119	3	4344	-3.54	-2.46	0.02
13	SLE RA 21	-112	3	4270	-3.51	-2.28	0.02
13	SLE FR 1	-113	2	3885	-3.1	-2.4	0.02
13	SLE FR 2	-111	2	3861	-3.09	-2.34	0.02
13	SLE FR 3	-114	2	3893	-3.11	-2.43	0.02
13	SLE FR 4	-112	2	3992	-3.22	-2.34	0.02
13	SLE FR 5	-115	2	4025	-3.24	-2.43	0.02
13	SLE FR 6	-115	3	4104	-3.31	-2.39	0.02
13	SLE QP 1	-113	2	3885	-3.1	-2.4	0.02
13	SLE QP 2	-114	2	4017	-3.23	-2.39	0.02
13	SLD 1	217	2	4262	-4.55	8.69	0.03
13	SLD 2	217	2	4262	-4.55	8.69	0.03
13	SLD 3	267	-3	3495	0.12	10.05	0.02
13	SLD 4	267	-3	3495	0.12	10.05	0.02
13	SLD 5	-91	10	5255	-10.7	-1.13	0.04
13	SLD 6	-91	10	5255	-10.7	-1.13	0.04
13	SLD 7	76	-7	2696	4.85	3.4	0
13	SLD 8	76	-7	2696	4.85	3.4	0
13	SLD 9	-305	11	5338	-11.3	-8.19	0.04
13	SLD 10	-305	11	5338	-11.3	-8.19	0.04
13	SLD 11	-138	-5	2779	4.24	-3.66	0
13	SLD 12	-138	-5	2779	4.24	-3.66	0
13	SLD 13	-496	8	4539	-6.57	-14.84	0.02

Nodo	Cont.	Reazione a traslazione			Reazione a rotazione		
Ind.	N.br.	x	y	z	x	y	z
13	SLD 14	-496	8	4539	-6.57	-14.84	0.02
13	SLD 15	-445	3	3771	-1.91	-13.48	0.01
13	SLD 16	-445	3	3771	-1.91	-13.48	0.01
13	SLV 1	658	2	4595	-6.32	23.45	0.05
13	SLV 2	658	2	4595	-6.32	23.45	0.05
13	SLV 3	776	-9	2787	4.6	26.66	0.02
13	SLV 4	776	-9	2787	4.6	26.66	0.02
13	SLV 5	-62	20	6933	-20.71	0.49	0.07
13	SLV 6	-62	20	6933	-20.71	0.49	0.07
13	SLV 7	332	-19	905	15.68	11.19	-0.02
13	SLV 8	332	-19	905	15.68	11.19	-0.02
13	SLV 9	-561	23	7128	-22.14	-15.98	0.06
13	SLV 10	-561	23	7128	-22.14	-15.98	0.06
13	SLV 11	-167	-15	1100	14.26	-5.28	-0.03
13	SLV 12	-167	-15	1100	14.26	-5.28	-0.03
13	SLV 13	-1005	14	5246	-11.06	-31.45	0.02
13	SLV 14	-1005	14	5246	-11.06	-31.45	0.02
13	SLV 15	-886	3	3438	-0.14	-28.24	-0.01
13	SLV 16	-886	3	3438	-0.14	-28.24	-0.01
14	SLU 1	-46	5	3633	-3.58	-1.69	0
14	SLU 2	-38	5	3467	-3.51	-1.43	0
14	SLU 3	-50	5	3676	-3.64	-1.82	0
14	SLU 4	-45	5	3576	-3.6	-1.66	0
14	SLU 5	-42	5	3494	-3.55	-1.56	0
14	SLU 6	-54	5	3703	-3.68	-1.96	0
14	SLU 7	-49	5	3603	-3.64	-1.8	0
14	SLU 8	-54	5	3689	-3.66	-1.96	0
14	SLU 9	-49	5	3589	-3.62	-1.8	0
14	SLU 10	-36	5	3915	-3.99	-1.4	0
14	SLU 11	-48	5	4124	-4.13	-1.79	0
14	SLU 12	-43	5	4024	-4.09	-1.64	0
14	SLU 13	-40	5	3943	-4.03	-1.54	0
14	SLU 14	-52	5	4152	-4.17	-1.93	0
14	SLU 15	-47	5	4052	-4.13	-1.77	0
14	SLU 16	-52	5	4137	-4.15	-1.94	0
14	SLU 17	-47	5	4037	-4.1	-1.78	0
14	SLU 18	-43	5	4274	-4.28	-1.65	0
14	SLU 19	-39	5	4174	-4.23	-1.5	0
14	SLU 20	-47	5	4302	-4.32	-1.79	0
14	SLU 21	-43	6	4202	-4.27	-1.63	0
14	SLU 22	-52	5	3932	-3.97	-1.9	0
14	SLU 23	-44	5	3765	-3.9	-1.63	0
14	SLU 24	-56	5	3974	-4.03	-2.03	0
14	SLU 25	-51	5	3874	-3.99	-1.87	0
14	SLU 26	-48	5	3792	-3.94	-1.77	0
14	SLU 27	-60	5	4001	-4.07	-2.16	0
14	SLU 28	-55	5	3901	-4.03	-2	0
14	SLU 29	-60	5	3987	-4.05	-2.17	0
14	SLU 30	-55	5	3887	-4.01	-2.01	0
14	SLU 31	-42	6	4213	-4.38	-1.61	0
14	SLU 32	-54	6	4422	-4.52	-2	0
14	SLU 33	-49	6	4322	-4.48	-1.84	0
14	SLU 34	-46	6	4241	-4.42	-1.74	0
14	SLU 35	-58	6	4450	-4.56	-2.14	0
14	SLU 36	-53	6	4350	-4.52	-1.98	0
14	SLU 37	-58	6	4435	-4.54	-2.14	0
14	SLU 38	-53	6	4335	-4.49	-1.98	0
14	SLU 39	-49	6	4572	-4.67	-1.86	0
14	SLU 40	-44	6	4472	-4.62	-1.7	0
14	SLU 41	-53	6	4600	-4.71	-2	0
14	SLU 42	-48	6	4500	-4.66	-1.84	0
14	SLU 43	-58	6	4621	-4.52	-2.13	0
14	SLU 44	-50	6	4454	-4.45	-1.86	0
14	SLU 45	-62	6	4663	-4.59	-2.26	0
14	SLU 46	-57	6	4563	-4.54	-2.1	0
14	SLU 47	-54	6	4482	-4.49	-2	0
14	SLU 48	-66	6	4691	-4.63	-2.39	0
14	SLU 49	-61	6	4591	-4.58	-2.23	0
14	SLU 50	-66	6	4677	-4.6	-2.4	0
14	SLU 51	-61	6	4576	-4.56	-2.24	0
14	SLU 52	-48	6	4903	-4.94	-1.84	0
14	SLU 53	-60	6	5112	-5.07	-2.23	0
14	SLU 54	-55	6	5012	-5.03	-2.07	0
14	SLU 55	-52	6	4931	-4.98	-1.97	0
14	SLU 56	-64	7	5140	-5.11	-2.37	0
14	SLU 57	-59	7	5040	-5.07	-2.21	0
14	SLU 58	-64	6	5125	-5.09	-2.37	0
14	SLU 59	-59	7	5025	-5.04	-2.21	0
14	SLU 60	-55	7	5262	-5.22	-2.09	0
14	SLU 61	-51	7	5162	-5.17	-1.93	0
14	SLU 62	-59	7	5290	-5.26	-2.23	0
14	SLU 63	-55	7	5189	-5.21	-2.07	0
14	SLU 64	-64	6	4919	-4.91	-2.33	0
14	SLU 65	-56	6	4753	-4.84	-2.07	0
14	SLU 66	-68	6	4962	-4.98	-2.46	0
14	SLU 67	-63	6	4862	-4.93	-2.3	0
14	SLU 68	-60	6	4780	-4.88	-2.21	0
14	SLU 69	-72	6	4989	-5.02	-2.6	0
14	SLU 70	-67	6	4889	-4.97	-2.44	0
14	SLU 71	-72	6	4975	-4.99	-2.61	0

Nodo	Cont.	Reazione a traslazione			Reazione a rotazione		
Ind.	N.br.	x	y	z	x	y	z
14	SLU 72	-67	6	4875	-4.95	-2.45	0
14	SLU 73	-54	7	5201	-5.32	-2.04	0
14	SLU 74	-66	7	5410	-5.46	-2.44	0.01
14	SLU 75	-61	7	5310	-5.42	-2.28	0.01
14	SLU 76	-58	7	5229	-5.36	-2.18	0
14	SLU 77	-70	7	5438	-5.5	-2.57	0.01
14	SLU 78	-65	7	5338	-5.46	-2.41	0.01
14	SLU 79	-70	7	5423	-5.48	-2.58	0.01
14	SLU 80	-65	7	5323	-5.43	-2.42	0.01
14	SLU 81	-61	7	5560	-5.61	-2.3	0.01
14	SLU 82	-56	7	5460	-5.56	-2.14	0.01
14	SLU 83	-65	7	5588	-5.65	-2.43	0.01
14	SLU 84	-60	7	5488	-5.6	-2.27	0.01
14	SLE RA 1	-48	5	3719	-3.69	-1.75	0
14	SLE RA 2	-43	5	3607	-3.64	-1.57	0
14	SLE RA 3	-50	5	3747	-3.73	-1.84	0
14	SLE RA 4	-47	5	3680	-3.71	-1.73	0
14	SLE RA 5	-45	5	3626	-3.67	-1.66	0
14	SLE RA 6	-53	5	3765	-3.76	-1.93	0
14	SLE RA 7	-50	5	3698	-3.73	-1.82	0
14	SLE RA 8	-53	5	3755	-3.75	-1.93	0
14	SLE RA 9	-50	5	3689	-3.72	-1.82	0
14	SLE RA 10	-41	5	3906	-3.97	-1.56	0
14	SLE RA 11	-49	5	4046	-4.06	-1.82	0
14	SLE RA 12	-46	5	3979	-4.03	-1.71	0
14	SLE RA 13	-44	5	3925	-3.99	-1.65	0
14	SLE RA 14	-52	5	4064	-4.09	-1.91	0
14	SLE RA 15	-49	5	3997	-4.06	-1.8	0
14	SLE RA 16	-52	5	4054	-4.07	-1.91	0
14	SLE RA 17	-49	5	3988	-4.04	-1.81	0
14	SLE RA 18	-46	5	4146	-4.16	-1.73	0
14	SLE RA 19	-43	5	4079	-4.13	-1.62	0
14	SLE RA 20	-49	5	4164	-4.18	-1.82	0
14	SLE RA 21	-46	5	4097	-4.15	-1.71	0
14	SLE FR 1	-48	5	3719	-3.69	-1.75	0
14	SLE FR 2	-47	5	3696	-3.68	-1.71	0
14	SLE FR 3	-49	5	3726	-3.7	-1.79	0
14	SLE FR 4	-46	5	3824	-3.82	-1.71	0
14	SLE FR 5	-48	5	3854	-3.84	-1.78	0
14	SLE FR 6	-47	5	3932	-3.92	-1.74	0
14	SLE QP 1	-48	5	3719	-3.69	-1.75	0
14	SLE QP 2	-47	5	3847	-3.83	-1.74	0
14	SLD 1	316	8	4108	-6.22	10.32	0.01
14	SLD 2	316	8	4108	-6.22	10.32	0.01
14	SLD 3	349	-1	3397	0.47	11.4	0
14	SLD 4	349	-1	3397	0.47	11.4	0
14	SLD 5	11	20	5003	-14.7	0.24	0.02
14	SLD 6	11	20	5003	-14.7	0.24	0.02
14	SLD 7	123	-11	2634	7.61	3.84	-0.01
14	SLD 8	123	-11	2634	7.61	3.84	-0.01
14	SLD 9	-217	21	5060	-15.27	-7.32	0.01
14	SLD 10	-217	21	5060	-15.27	-7.32	0.01
14	SLD 11	-105	-10	2690	7.04	-3.72	-0.01
14	SLD 12	-105	-10	2690	7.04	-3.72	-0.01
14	SLD 13	-444	11	4296	-8.13	-14.88	0
14	SLD 14	-444	11	4296	-8.13	-14.88	0
14	SLD 15	-410	2	3585	-1.44	-13.8	0
14	SLD 16	-410	2	3585	-1.44	-13.8	0
14	SLV 1	799	12	4462	-9.43	26.38	0.02
14	SLV 2	799	12	4462	-9.43	26.38	0.02
14	SLV 3	879	-9	2787	6.23	28.95	0
14	SLV 4	879	-9	2787	6.23	28.95	0
14	SLV 5	86	40	6572	-29.27	2.8	0.03
14	SLV 6	86	40	6572	-29.27	2.8	0.03
14	SLV 7	351	-33	989	22.95	11.36	-0.02
14	SLV 8	351	-33	989	22.95	11.36	-0.02
14	SLV 9	-446	42	6705	-30.61	-14.84	0.03
14	SLV 10	-446	42	6705	-30.61	-14.84	0.03
14	SLV 11	-181	-31	1122	21.61	-6.29	-0.03
14	SLV 12	-181	-31	1122	21.61	-6.29	-0.03
14	SLV 13	-973	19	4906	-13.9	-32.43	0
14	SLV 14	-973	19	4906	-13.9	-32.43	0
14	SLV 15	-894	-3	3231	1.77	-29.87	-0.01
14	SLV 16	-894	-3	3231	1.77	-29.87	-0.01
15	SLU 1	70	5	3653	-3.91	2.5	0
15	SLU 2	65	5	3485	-3.83	2.34	0
15	SLU 3	69	5	3694	-3.98	2.46	0
15	SLU 4	66	5	3594	-3.93	2.36	0
15	SLU 5	63	5	3512	-3.87	2.27	0
15	SLU 6	66	5	3721	-4.02	2.39	0
15	SLU 7	63	5	3621	-3.97	2.29	0
15	SLU 8	66	5	3707	-3.99	2.37	0
15	SLU 9	63	5	3606	-3.94	2.27	0
15	SLU 10	75	6	3941	-4.35	2.67	0
15	SLU 11	79	6	4150	-4.5	2.79	0
15	SLU 12	76	6	4049	-4.45	2.69	0
15	SLU 13	73	6	3968	-4.39	2.6	0
15	SLU 14	76	6	4177	-4.54	2.73	0
15	SLU 15	73	6	4076	-4.49	2.63	0
15	SLU 16	76	6	4162	-4.51	2.7	0

Nodo	Cont.	Reazione a traslazione			Reazione a rotazione		
Ind.	N.br.	x	y	z	x	y	z
15	SLU 17	73	6	4062	-4.46	2.6	0
15	SLU 18	85	6	4303	-4.66	2.98	0
15	SLU 19	82	6	4203	-4.61	2.88	0
15	SLU 20	82	6	4330	-4.7	2.91	0
15	SLU 21	79	6	4230	-4.65	2.81	0
15	SLU 22	75	6	3952	-4.33	2.69	0
15	SLU 23	70	6	3785	-4.25	2.52	0
15	SLU 24	74	6	3994	-4.4	2.64	0
15	SLU 25	71	6	3894	-4.35	2.54	0
15	SLU 26	68	6	3812	-4.29	2.45	0
15	SLU 27	71	6	4021	-4.44	2.58	0
15	SLU 28	68	6	3921	-4.39	2.48	0
15	SLU 29	71	6	4006	-4.41	2.55	0
15	SLU 30	68	6	3906	-4.36	2.45	0
15	SLU 31	80	7	4240	-4.78	2.86	0.01
15	SLU 32	84	7	4450	-4.92	2.98	0
15	SLU 33	81	7	4349	-4.87	2.88	0.01
15	SLU 34	78	7	4267	-4.82	2.79	0.01
15	SLU 35	81	7	4477	-4.96	2.91	0
15	SLU 36	78	7	4376	-4.91	2.81	0.01
15	SLU 37	81	7	4462	-4.94	2.89	0
15	SLU 38	78	7	4361	-4.89	2.79	0.01
15	SLU 39	90	7	4603	-5.08	3.16	0.01
15	SLU 40	87	7	4502	-5.03	3.06	0.01
15	SLU 41	87	7	4630	-5.12	3.1	0.01
15	SLU 42	84	7	4529	-5.07	3	0.01
15	SLU 43	90	7	4646	-4.94	3.19	0
15	SLU 44	85	7	4478	-4.86	3.02	0.01
15	SLU 45	88	7	4687	-5	3.15	0
15	SLU 46	85	7	4587	-4.96	3.05	0
15	SLU 47	82	7	4505	-4.9	2.96	0.01
15	SLU 48	86	7	4714	-5.04	3.08	0
15	SLU 49	83	7	4614	-4.99	2.98	0.01
15	SLU 50	85	7	4700	-5.02	3.05	0
15	SLU 51	82	7	4599	-4.97	2.96	0
15	SLU 52	95	7	4934	-5.38	3.36	0.01
15	SLU 53	98	7	5143	-5.53	3.48	0.01
15	SLU 54	95	8	5042	-5.48	3.38	0.01
15	SLU 55	92	7	4961	-5.42	3.29	0.01
15	SLU 56	96	8	5170	-5.57	3.41	0.01
15	SLU 57	93	8	5069	-5.52	3.31	0.01
15	SLU 58	95	8	5155	-5.54	3.39	0.01
15	SLU 59	92	8	5055	-5.49	3.29	0.01
15	SLU 60	104	8	5296	-5.69	3.67	0.01
15	SLU 61	101	8	5196	-5.64	3.57	0.01
15	SLU 62	102	8	5323	-5.73	3.6	0.01
15	SLU 63	99	8	5223	-5.68	3.5	0.01
15	SLU 64	95	7	4945	-5.36	3.37	0.01
15	SLU 65	90	7	4778	-5.28	3.21	0.01
15	SLU 66	93	7	4987	-5.43	3.33	0.01
15	SLU 67	90	7	4887	-5.38	3.23	0.01
15	SLU 68	87	7	4805	-5.32	3.14	0.01
15	SLU 69	91	7	5014	-5.47	3.26	0.01
15	SLU 70	88	7	4914	-5.42	3.16	0.01
15	SLU 71	90	7	4999	-5.44	3.24	0.01
15	SLU 72	87	7	4899	-5.39	3.14	0.01
15	SLU 73	100	8	5233	-5.8	3.54	0.01
15	SLU 74	103	8	5443	-5.95	3.67	0.01
15	SLU 75	100	8	5342	-5.9	3.57	0.01
15	SLU 76	97	8	5260	-5.84	3.48	0.01
15	SLU 77	101	8	5470	-5.99	3.6	0.01
15	SLU 78	98	8	5369	-5.94	3.5	0.01
15	SLU 79	100	8	5455	-5.96	3.57	0.01
15	SLU 80	97	8	5354	-5.92	3.47	0.01
15	SLU 81	109	8	5596	-6.11	3.85	0.01
15	SLU 82	106	8	5495	-6.06	3.75	0.01
15	SLU 83	107	8	5623	-6.15	3.78	0.01
15	SLU 84	104	8	5522	-6.1	3.68	0.01
15	SLE RA 1	72	5	3738	-4.03	2.55	0
15	SLE RA 2	68	5	3627	-3.98	2.44	0
15	SLE RA 3	71	6	3766	-4.07	2.53	0
15	SLE RA 4	69	6	3699	-4.04	2.46	0
15	SLE RA 5	67	6	3645	-4	2.4	0
15	SLE RA 6	69	6	3784	-4.1	2.48	0
15	SLE RA 7	67	6	3717	-4.07	2.42	0
15	SLE RA 8	69	6	3774	-4.08	2.46	0
15	SLE RA 9	67	6	3707	-4.05	2.4	0
15	SLE RA 10	75	6	3930	-4.33	2.67	0
15	SLE RA 11	77	6	4070	-4.42	2.75	0
15	SLE RA 12	75	6	4003	-4.39	2.68	0
15	SLE RA 13	74	6	3948	-4.35	2.62	0
15	SLE RA 14	76	6	4088	-4.45	2.7	0
15	SLE RA 15	74	6	4021	-4.42	2.64	0
15	SLE RA 16	75	6	4078	-4.43	2.69	0
15	SLE RA 17	73	6	4011	-4.4	2.62	0
15	SLE RA 18	81	6	4172	-4.53	2.87	0
15	SLE RA 19	79	6	4105	-4.5	2.81	0
15	SLE RA 20	80	6	4190	-4.56	2.83	0
15	SLE RA 21	78	6	4123	-4.52	2.76	0
15	SLE FR 1	72	5	3738	-4.03	2.55	0

Nodo	Cont.	Reazione a traslazione			Reazione a rotazione		
Ind.	N.br.	x	y	z	x	y	z
15	SLE FR 2	71	5	3716	-4.02	2.53	0
15	SLE FR 3	71	5	3745	-4.04	2.54	0
15	SLE FR 4	74	6	3846	-4.17	2.63	0
15	SLE FR 5	74	6	3876	-4.19	2.63	0
15	SLE FR 6	77	6	3955	-4.28	2.71	0
15	SLE QP 1	72	5	3738	-4.03	2.55	0
15	SLE QP 2	75	6	3868	-4.18	2.65	0
15	SLD 1	471	13	4144	-8.83	15.62	0.01
15	SLD 2	471	13	4144	-8.83	15.62	0.01
15	SLD 3	431	3	3430	-1.86	14.34	0
15	SLD 4	431	3	3430	-1.86	14.34	0
15	SLD 5	255	23	5034	-16.15	8.48	0.02
15	SLD 6	255	23	5034	-16.15	8.48	0.02
15	SLD 7	120	-11	2654	7.09	4.22	-0.01
15	SLD 8	120	-11	2654	7.09	4.22	-0.01
15	SLD 9	29	22	5083	-15.45	1.08	0.02
15	SLD 10	29	22	5083	-15.45	1.08	0.02
15	SLD 11	-105	-12	2703	7.79	-3.18	-0.01
15	SLD 12	-105	-12	2703	7.79	-3.18	-0.01
15	SLD 13	-281	9	4307	-6.5	-9.04	0
15	SLD 14	-281	9	4307	-6.5	-9.04	0
15	SLD 15	-322	-1	3593	0.47	-10.32	0
15	SLD 16	-322	-1	3593	0.47	-10.32	0
15	SLV 1	1001	22	4516	-15.06	32.94	0.03
15	SLV 2	1001	22	4516	-15.06	32.94	0.03
15	SLV 3	905	-1	2834	1.26	29.89	0.01
15	SLV 4	905	-1	2834	1.26	29.89	0.01
15	SLV 5	499	46	6614	-32.2	16.37	0.04
15	SLV 6	499	46	6614	-32.2	16.37	0.04
15	SLV 7	178	-32	1007	22.2	6.19	-0.03
15	SLV 8	178	-32	1007	22.2	6.19	-0.03
15	SLV 9	-28	44	6730	-30.57	-0.89	0.03
15	SLV 10	-28	44	6730	-30.57	-0.89	0.03
15	SLV 11	-349	-35	1123	23.84	-11.07	-0.03
15	SLV 12	-349	-35	1123	23.84	-11.07	-0.03
15	SLV 13	-755	13	4903	-9.62	-24.59	0
15	SLV 14	-755	13	4903	-9.62	-24.59	0
15	SLV 15	-852	-11	3221	6.7	-27.64	-0.02
15	SLV 16	-852	-11	3221	6.7	-27.64	-0.02
16	SLU 1	136	5	3853	-3.97	2.6	-0.01
16	SLU 2	121	5	3667	-3.86	2.26	-0.01
16	SLU 3	136	5	3898	-4.03	2.56	-0.01
16	SLU 4	127	5	3786	-3.97	2.35	-0.01
16	SLU 5	120	5	3696	-3.9	2.18	-0.01
16	SLU 6	134	5	3926	-4.07	2.48	-0.01
16	SLU 7	126	5	3815	-4.01	2.28	-0.01
16	SLU 8	133	5	3910	-4.05	2.45	-0.01
16	SLU 9	124	5	3799	-3.98	2.24	-0.01
16	SLU 10	133	6	4146	-4.39	2.43	-0.01
16	SLU 11	147	6	4376	-4.57	2.73	-0.01
16	SLU 12	139	6	4265	-4.51	2.53	-0.01
16	SLU 13	131	6	4174	-4.43	2.36	-0.01
16	SLU 14	146	6	4405	-4.61	2.66	-0.01
16	SLU 15	137	6	4293	-4.55	2.45	-0.01
16	SLU 16	145	6	4388	-4.58	2.62	-0.01
16	SLU 17	136	6	4277	-4.52	2.42	-0.01
16	SLU 18	152	6	4536	-4.73	2.85	-0.01
16	SLU 19	143	6	4425	-4.67	2.64	-0.01
16	SLU 20	151	6	4565	-4.77	2.77	-0.01
16	SLU 21	142	6	4453	-4.71	2.57	-0.01
16	SLU 22	147	6	4171	-4.4	2.78	-0.01
16	SLU 23	132	6	3985	-4.29	2.43	-0.01
16	SLU 24	147	6	4216	-4.47	2.73	-0.01
16	SLU 25	138	6	4104	-4.4	2.53	-0.01
16	SLU 26	131	6	4014	-4.33	2.36	-0.01
16	SLU 27	145	6	4244	-4.51	2.66	-0.01
16	SLU 28	137	6	4133	-4.44	2.45	-0.01
16	SLU 29	144	6	4228	-4.48	2.62	-0.01
16	SLU 30	135	6	4117	-4.41	2.42	-0.01
16	SLU 31	144	7	4464	-4.83	2.61	-0.01
16	SLU 32	158	7	4694	-5	2.91	-0.01
16	SLU 33	149	7	4582	-4.94	2.7	-0.01
16	SLU 34	142	7	4492	-4.87	2.53	-0.01
16	SLU 35	157	7	4722	-5.04	2.83	-0.01
16	SLU 36	148	7	4611	-4.98	2.63	-0.01
16	SLU 37	155	7	4706	-5.01	2.8	-0.01
16	SLU 38	147	7	4595	-4.95	2.59	-0.01
16	SLU 39	163	7	4854	-5.16	3.03	-0.01
16	SLU 40	154	7	4743	-5.1	2.82	-0.01
16	SLU 41	162	7	4883	-5.2	2.95	-0.01
16	SLU 42	153	7	4771	-5.14	2.74	-0.01
16	SLU 43	173	6	4900	-5.01	3.32	-0.01
16	SLU 44	159	7	4714	-4.9	2.98	-0.01
16	SLU 45	173	7	4945	-5.08	3.28	-0.01
16	SLU 46	164	7	4833	-5.01	3.07	-0.01
16	SLU 47	157	7	4743	-4.94	2.9	-0.01
16	SLU 48	172	7	4973	-5.12	3.2	-0.01
16	SLU 49	163	7	4862	-5.05	3	-0.01
16	SLU 50	170	7	4957	-5.09	3.17	-0.01
16	SLU 51	162	7	4846	-5.02	2.96	-0.01

Nodo	Cont.	Reazione a traslazione			Reazione a rotazione		
Ind.	N.br.	x	y	z	x	y	z
16	SLU 52	170	7	5192	-5.44	3.15	-0.01
16	SLU 53	184	7	5423	-5.61	3.45	-0.01
16	SLU 54	176	7	5311	-5.55	3.25	-0.01
16	SLU 55	168	7	5221	-5.48	3.07	-0.01
16	SLU 56	183	7	5451	-5.65	3.37	-0.01
16	SLU 57	174	7	5340	-5.59	3.17	-0.01
16	SLU 58	182	7	5435	-5.62	3.34	-0.01
16	SLU 59	173	7	5324	-5.56	3.14	-0.01
16	SLU 60	189	8	5583	-5.77	3.57	-0.01
16	SLU 61	181	8	5472	-5.71	3.36	-0.01
16	SLU 62	188	8	5612	-5.81	3.49	-0.01
16	SLU 63	179	8	5500	-5.75	3.29	-0.01
16	SLU 64	184	7	5218	-5.44	3.5	-0.01
16	SLU 65	169	7	5032	-5.33	3.15	-0.01
16	SLU 66	184	7	5262	-5.51	3.45	-0.01
16	SLU 67	175	7	5151	-5.44	3.25	-0.01
16	SLU 68	168	7	5061	-5.37	3.08	-0.01
16	SLU 69	182	7	5291	-5.55	3.38	-0.01
16	SLU 70	174	7	5180	-5.48	3.17	-0.01
16	SLU 71	181	7	5275	-5.52	3.34	-0.01
16	SLU 72	172	7	5164	-5.45	3.14	-0.01
16	SLU 73	181	8	5510	-5.87	3.33	-0.01
16	SLU 74	195	8	5741	-6.05	3.63	-0.01
16	SLU 75	186	8	5629	-5.98	3.42	-0.01
16	SLU 76	179	8	5539	-5.91	3.25	-0.01
16	SLU 77	194	8	5769	-6.08	3.55	-0.01
16	SLU 78	185	8	5658	-6.02	3.35	-0.01
16	SLU 79	192	8	5753	-6.06	3.52	-0.01
16	SLU 80	184	8	5642	-5.99	3.31	-0.01
16	SLU 81	200	8	5901	-6.21	3.75	-0.01
16	SLU 82	191	8	5790	-6.14	3.54	-0.01
16	SLU 83	199	8	5929	-6.25	3.67	-0.01
16	SLU 84	190	8	5818	-6.18	3.46	-0.01
16	SLE RA 1	139	5	3944	-4.09	2.65	-0.01
16	SLE RA 2	129	5	3820	-4.02	2.42	-0.01
16	SLE RA 3	139	5	3974	-4.13	2.62	-0.01
16	SLE RA 4	133	5	3899	-4.09	2.49	-0.01
16	SLE RA 5	128	5	3839	-4.04	2.37	-0.01
16	SLE RA 6	138	5	3993	-4.16	2.57	-0.01
16	SLE RA 7	132	5	3919	-4.12	2.43	-0.01
16	SLE RA 8	137	5	3982	-4.14	2.55	-0.01
16	SLE RA 9	131	5	3908	-4.1	2.41	-0.01
16	SLE RA 10	137	6	4139	-4.37	2.54	-0.01
16	SLE RA 11	147	6	4292	-4.49	2.74	-0.01
16	SLE RA 12	141	6	4218	-4.45	2.6	-0.01
16	SLE RA 13	136	6	4158	-4.4	2.49	-0.01
16	SLE RA 14	146	6	4311	-4.52	2.69	-0.01
16	SLE RA 15	140	6	4237	-4.48	2.55	-0.01
16	SLE RA 16	145	6	4301	-4.5	2.66	-0.01
16	SLE RA 17	139	6	4227	-4.46	2.53	-0.01
16	SLE RA 18	150	6	4399	-4.6	2.82	-0.01
16	SLE RA 19	144	6	4325	-4.56	2.68	-0.01
16	SLE RA 20	149	6	4418	-4.63	2.77	-0.01
16	SLE RA 21	143	6	4344	-4.58	2.63	-0.01
16	SLE FR 1	139	5	3944	-4.09	2.65	-0.01
16	SLE FR 2	137	5	3919	-4.07	2.61	-0.01
16	SLE FR 3	139	5	3951	-4.1	2.63	-0.01
16	SLE FR 4	140	6	4056	-4.23	2.66	-0.01
16	SLE FR 5	142	6	4088	-4.25	2.68	-0.01
16	SLE FR 6	144	6	4171	-4.34	2.73	-0.01
16	SLE QP 1	139	5	3944	-4.09	2.65	-0.01
16	SLE QP 2	142	6	4080	-4.24	2.7	-0.01
16	SLD 1	528	12	4594	-8.26	15.46	-0.01
16	SLD 2	528	12	4594	-8.26	15.46	-0.01
16	SLD 3	466	5	3818	-2.93	13.77	0
16	SLD 4	466	5	3818	-2.93	13.77	0
16	SLD 5	352	18	5411	-13.55	9.09	-0.02
16	SLD 6	352	18	5411	-13.55	9.09	-0.02
16	SLD 7	145	-5	2825	4.25	3.46	0.01
16	SLD 8	145	-5	2825	4.25	3.46	0.01
16	SLD 9	139	16	5335	-12.73	1.94	-0.03
16	SLD 10	139	16	5335	-12.73	1.94	-0.03
16	SLD 11	-67	-7	2750	5.06	-3.69	0
16	SLD 12	-67	-7	2750	5.06	-3.69	0
16	SLD 13	-181	6	4342	-5.56	-8.37	-0.02
16	SLD 14	-181	6	4342	-5.56	-8.37	-0.02
16	SLD 15	-243	-1	3567	-0.22	-10.06	-0.01
16	SLD 16	-243	-1	3567	-0.22	-10.06	-0.01
16	SLV 1	1043	21	5291	-13.66	32.51	0
16	SLV 2	1043	21	5291	-13.66	32.51	0
16	SLV 3	896	5	3463	-1.16	28.49	0.02
16	SLV 4	896	5	3463	-1.16	28.49	0.02
16	SLV 5	636	34	7216	-26.02	17.74	-0.04
16	SLV 6	636	34	7216	-26.02	17.74	-0.04
16	SLV 7	145	-19	1123	15.63	4.34	0.03
16	SLV 8	145	-19	1123	15.63	4.34	0.03
16	SLV 9	140	30	7038	-24.12	1.06	-0.05
16	SLV 10	140	30	7038	-24.12	1.06	-0.05
16	SLV 11	-351	-23	945	17.53	-12.34	0.02
16	SLV 12	-351	-23	945	17.53	-12.34	0.02

Nodo	Cont.	Reazione a traslazione			Reazione a rotazione		
Ind.	N.br.	x	y	z	x	y	z
16	SLV 13	-611	6	4698	-7.32	-23.09	-0.04
16	SLV 14	-611	6	4698	-7.32	-23.09	-0.04
16	SLV 15	-758	-10	2870	5.17	-27.11	-0.02
16	SLV 16	-758	-10	2870	5.17	-27.11	-0.02
17	SLU 1	197	16	4338	-4.92	5.02	0.06
17	SLU 2	175	15	4109	-4.66	4.44	0.06
17	SLU 3	199	16	4392	-5.01	5.06	0.06
17	SLU 4	186	16	4255	-4.86	4.72	0.06
17	SLU 5	175	15	4144	-4.72	4.45	0.06
17	SLU 6	200	17	4427	-5.06	5.07	0.06
17	SLU 7	186	16	4289	-4.91	4.72	0.06
17	SLU 8	198	16	4407	-5.03	5.03	0.06
17	SLU 9	185	16	4270	-4.87	4.68	0.06
17	SLU 10	187	17	4640	-5.32	4.69	0.07
17	SLU 11	212	18	4923	-5.67	5.31	0.07
17	SLU 12	199	18	4786	-5.52	4.97	0.07
17	SLU 13	188	18	4675	-5.38	4.7	0.07
17	SLU 14	213	19	4958	-5.72	5.32	0.07
17	SLU 15	199	18	4820	-5.57	4.97	0.07
17	SLU 16	211	19	4938	-5.68	5.28	0.07
17	SLU 17	197	18	4801	-5.53	4.93	0.07
17	SLU 18	216	19	5097	-5.86	5.38	0.07
17	SLU 19	202	19	4959	-5.71	5.03	0.07
17	SLU 20	216	19	5131	-5.91	5.38	0.07
17	SLU 21	203	19	4994	-5.76	5.04	0.07
17	SLU 22	214	18	4703	-5.44	5.44	0.07
17	SLU 23	192	17	4473	-5.18	4.86	0.06
17	SLU 24	217	18	4757	-5.53	5.48	0.07
17	SLU 25	203	18	4619	-5.38	5.14	0.07
17	SLU 26	192	17	4508	-5.24	4.87	0.06
17	SLU 27	217	18	4791	-5.58	5.49	0.07
17	SLU 28	203	18	4654	-5.43	5.14	0.07
17	SLU 29	215	18	4772	-5.54	5.45	0.07
17	SLU 30	202	18	4634	-5.39	5.1	0.07
17	SLU 31	205	19	5004	-5.84	5.12	0.07
17	SLU 32	230	20	5287	-6.19	5.73	0.08
17	SLU 33	216	20	5150	-6.04	5.39	0.07
17	SLU 34	205	19	5039	-5.9	5.12	0.07
17	SLU 35	230	20	5322	-6.24	5.74	0.08
17	SLU 36	216	20	5185	-6.09	5.4	0.07
17	SLU 37	228	20	5303	-6.2	5.7	0.08
17	SLU 38	215	20	5165	-6.05	5.36	0.07
17	SLU 39	233	21	5461	-6.38	5.8	0.08
17	SLU 40	219	20	5323	-6.23	5.45	0.08
17	SLU 41	233	21	5496	-6.43	5.8	0.08
17	SLU 42	220	20	5358	-6.28	5.46	0.08
17	SLU 43	251	20	5515	-6.21	6.38	0.08
17	SLU 44	228	19	5286	-5.96	5.8	0.07
17	SLU 45	253	21	5569	-6.31	6.42	0.08
17	SLU 46	239	20	5431	-6.15	6.08	0.08
17	SLU 47	228	20	5320	-6.02	5.81	0.07
17	SLU 48	253	21	5603	-6.36	6.43	0.08
17	SLU 49	240	20	5466	-6.21	6.08	0.08
17	SLU 50	252	21	5584	-6.32	6.39	0.08
17	SLU 51	238	20	5447	-6.17	6.04	0.08
17	SLU 52	241	22	5817	-6.62	6.05	0.08
17	SLU 53	266	23	6100	-6.96	6.67	0.09
17	SLU 54	252	22	5962	-6.81	6.33	0.08
17	SLU 55	241	22	5851	-6.67	6.06	0.08
17	SLU 56	266	23	6134	-7.02	6.68	0.09
17	SLU 57	252	22	5997	-6.87	6.33	0.08
17	SLU 58	264	23	6115	-6.98	6.64	0.09
17	SLU 59	251	22	5977	-6.83	6.3	0.08
17	SLU 60	269	23	6273	-7.16	6.74	0.09
17	SLU 61	255	23	6136	-7	6.39	0.09
17	SLU 62	269	24	6308	-7.21	6.74	0.09
17	SLU 63	256	23	6170	-7.06	6.4	0.09
17	SLU 64	268	22	5879	-6.73	6.8	0.08
17	SLU 65	245	21	5650	-6.48	6.22	0.08
17	SLU 66	270	22	5933	-6.82	6.84	0.08
17	SLU 67	256	22	5796	-6.67	6.5	0.08
17	SLU 68	245	21	5685	-6.53	6.23	0.08
17	SLU 69	270	22	5968	-6.88	6.85	0.09
17	SLU 70	257	22	5830	-6.73	6.5	0.08
17	SLU 71	269	22	5948	-6.84	6.81	0.08
17	SLU 72	255	22	5811	-6.69	6.47	0.08
17	SLU 73	258	23	6181	-7.14	6.48	0.09
17	SLU 74	283	24	6464	-7.48	7.09	0.09
17	SLU 75	269	24	6327	-7.33	6.75	0.09
17	SLU 76	258	23	6215	-7.19	6.48	0.09
17	SLU 77	283	25	6499	-7.54	7.1	0.09
17	SLU 78	270	24	6361	-7.39	6.76	0.09
17	SLU 79	282	24	6479	-7.5	7.06	0.09
17	SLU 80	268	24	6342	-7.35	6.72	0.09
17	SLU 81	286	25	6638	-7.68	7.16	0.09
17	SLU 82	273	24	6500	-7.52	6.81	0.09
17	SLU 83	287	25	6672	-7.73	7.16	0.1
17	SLU 84	273	25	6535	-7.58	6.82	0.09
17	SLE RA 1	202	17	4442	-5.07	5.14	0.06
17	SLE RA 2	187	16	4290	-4.9	4.75	0.06

Nodo	Cont.	Reazione a traslazione			Reazione a rotazione		
Ind.	N.br.	x	y	z	x	y	z
17	SLE RA 3	204	17	4478	-5.13	5.17	0.06
17	SLE RA 4	195	16	4387	-5.02	4.94	0.06
17	SLE RA 5	187	16	4313	-4.93	4.76	0.06
17	SLE RA 6	204	17	4501	-5.16	5.17	0.06
17	SLE RA 7	195	17	4410	-5.06	4.94	0.06
17	SLE RA 8	203	17	4489	-5.14	5.14	0.06
17	SLE RA 9	194	16	4397	-5.04	4.91	0.06
17	SLE RA 10	196	17	4643	-5.34	4.92	0.07
17	SLE RA 11	212	18	4832	-5.57	5.33	0.07
17	SLE RA 12	203	18	4741	-5.46	5.1	0.07
17	SLE RA 13	196	18	4667	-5.37	4.93	0.07
17	SLE RA 14	213	18	4855	-5.6	5.34	0.07
17	SLE RA 15	203	18	4764	-5.5	5.11	0.07
17	SLE RA 16	211	18	4842	-5.58	5.31	0.07
17	SLE RA 17	202	18	4751	-5.48	5.08	0.07
17	SLE RA 18	214	19	4948	-5.69	5.38	0.07
17	SLE RA 19	205	18	4856	-5.59	5.15	0.07
17	SLE RA 20	215	19	4971	-5.73	5.38	0.07
17	SLE RA 21	206	18	4879	-5.63	5.15	0.07
17	SLE FR 1	202	17	4442	-5.07	5.14	0.06
17	SLE FR 2	199	16	4412	-5.03	5.06	0.06
17	SLE FR 3	202	17	4452	-5.08	5.14	0.06
17	SLE FR 4	203	17	4563	-5.22	5.13	0.06
17	SLE FR 5	206	17	4603	-5.27	5.21	0.07
17	SLE FR 6	208	18	4695	-5.38	5.26	0.07
17	SLE QP 1	202	17	4442	-5.07	5.14	0.06
17	SLE QP 2	206	17	4594	-5.25	5.21	0.07
17	SLD 1	562	22	5257	-7.69	16.83	0.08
17	SLD 2	562	22	5257	-7.69	16.83	0.08
17	SLD 3	484	19	4333	-4.98	14.86	0.07
17	SLD 4	484	19	4333	-4.98	14.86	0.07
17	SLD 5	431	23	6194	-10.09	11.69	0.09
17	SLD 6	431	23	6194	-10.09	11.69	0.09
17	SLD 7	171	13	3115	-1.06	5.11	0.04
17	SLD 8	171	13	3115	-1.06	5.11	0.04
17	SLD 9	241	21	6074	-9.44	5.3	0.09
17	SLD 10	241	21	6074	-9.44	5.3	0.09
17	SLD 11	-19	11	2994	-0.42	-1.27	0.04
17	SLD 12	-19	11	2994	-0.42	-1.27	0.04
17	SLD 13	-72	15	4855	-5.53	-4.44	0.07
17	SLD 14	-72	15	4855	-5.53	-4.44	0.07
17	SLD 15	-150	12	3931	-2.82	-6.41	0.05
17	SLD 16	-150	12	3931	-2.82	-6.41	0.05
17	SLV 1	1038	29	6155	-10.95	32.38	0.1
17	SLV 2	1038	29	6155	-10.95	32.38	0.1
17	SLV 3	852	22	3978	-4.61	27.67	0.06
17	SLV 4	852	22	3978	-4.61	27.67	0.06
17	SLV 5	738	31	8365	-16.57	20.5	0.13
17	SLV 6	738	31	8365	-16.57	20.5	0.13
17	SLV 7	118	8	1107	4.55	4.81	0.01
17	SLV 8	118	8	1107	4.55	4.81	0.01
17	SLV 9	294	26	8081	-15.05	5.61	0.12
17	SLV 10	294	26	8081	-15.05	5.61	0.12
17	SLV 11	-326	3	824	6.06	-10.08	0
17	SLV 12	-326	3	824	6.06	-10.08	0
17	SLV 13	-440	12	5210	-5.89	-17.26	0.07
17	SLV 14	-440	12	5210	-5.89	-17.26	0.07
17	SLV 15	-626	5	3033	0.44	-21.97	0.03
17	SLV 16	-626	5	3033	0.44	-21.97	0.03
18	SLU 1	-117	1109	7261	-33.33	-5.56	0.01
18	SLU 2	-120	1035	6847	-30.84	-5.53	0.01
18	SLU 3	-120	1130	7362	-33.98	-5.72	0.01
18	SLU 4	-122	1086	7114	-32.48	-5.69	0.01
18	SLU 5	-122	1048	6912	-31.24	-5.66	0.01
18	SLU 6	-123	1143	7428	-34.38	-5.85	0.01
18	SLU 7	-125	1099	7179	-32.89	-5.83	0.01
18	SLU 8	-123	1136	7391	-34.13	-5.83	0.01
18	SLU 9	-124	1091	7143	-32.64	-5.81	0.01
18	SLU 10	-149	1178	7727	-35.17	-6.66	0.01
18	SLU 11	-150	1273	8242	-38.3	-6.85	0.01
18	SLU 12	-151	1228	7994	-36.81	-6.83	0.01
18	SLU 13	-152	1191	7792	-35.57	-6.79	0.01
18	SLU 14	-153	1286	8307	-38.71	-6.98	0.01
18	SLU 15	-154	1242	8059	-37.21	-6.96	0.02
18	SLU 16	-152	1278	8271	-38.46	-6.96	0.01
18	SLU 17	-154	1234	8023	-36.97	-6.94	0.02
18	SLU 18	-159	1313	8517	-39.51	-7.19	0.02
18	SLU 19	-161	1269	8269	-38.02	-7.16	0.02
18	SLU 20	-162	1327	8583	-39.91	-7.32	0.02
18	SLU 21	-164	1282	8335	-38.42	-7.29	0.02
18	SLU 22	-131	1219	7891	-36.68	-6.19	0.01
18	SLU 23	-134	1145	7478	-34.2	-6.15	0.01
18	SLU 24	-135	1240	7993	-37.33	-6.34	0.01
18	SLU 25	-136	1195	7745	-35.84	-6.32	0.01
18	SLU 26	-137	1158	7543	-34.6	-6.28	0.01
18	SLU 27	-138	1253	8058	-37.73	-6.47	0.01
18	SLU 28	-139	1209	7810	-36.24	-6.45	0.01
18	SLU 29	-137	1245	8022	-37.49	-6.46	0.01
18	SLU 30	-139	1201	7774	-36	-6.43	0.01
18	SLU 31	-163	1287	8357	-38.53	-7.29	0.02

Nodo	Cont.	Reazione a traslazione			Reazione a rotazione		
Ind.	N.br.	x	y	z	x	y	z
18	SLU 32	-164	1383	8873	-41.66	-7.48	0.02
18	SLU 33	-166	1338	8624	-40.17	-7.45	0.02
18	SLU 34	-166	1301	8423	-38.93	-7.42	0.02
18	SLU 35	-167	1396	8938	-42.06	-7.61	0.02
18	SLU 36	-169	1351	8690	-40.57	-7.59	0.02
18	SLU 37	-167	1388	8902	-41.82	-7.59	0.02
18	SLU 38	-168	1344	8653	-40.32	-7.57	0.02
18	SLU 39	-174	1423	9148	-42.87	-7.81	0.02
18	SLU 40	-175	1379	8900	-41.38	-7.79	0.02
18	SLU 41	-176	1436	9213	-43.27	-7.94	0.02
18	SLU 42	-178	1392	8965	-41.78	-7.92	0.02
18	SLU 43	-147	1405	9223	-42.17	-7.02	0.01
18	SLU 44	-150	1330	8809	-39.69	-6.98	0.01
18	SLU 45	-151	1425	9324	-42.82	-7.17	0.01
18	SLU 46	-152	1381	9076	-41.33	-7.15	0.01
18	SLU 47	-153	1343	8874	-40.09	-7.11	0.01
18	SLU 48	-153	1439	9390	-43.22	-7.3	0.01
18	SLU 49	-155	1394	9141	-41.73	-7.28	0.01
18	SLU 50	-153	1431	9353	-42.98	-7.28	0.01
18	SLU 51	-154	1386	9105	-41.48	-7.26	0.01
18	SLU 52	-179	1473	9689	-44.02	-8.12	0.02
18	SLU 53	-180	1568	10204	-47.15	-8.31	0.02
18	SLU 54	-182	1524	9956	-45.66	-8.28	0.02
18	SLU 55	-182	1486	9754	-44.42	-8.25	0.02
18	SLU 56	-183	1581	10269	-47.55	-8.44	0.02
18	SLU 57	-184	1537	10021	-46.06	-8.41	0.02
18	SLU 58	-183	1574	10233	-47.3	-8.42	0.02
18	SLU 59	-184	1529	9985	-45.81	-8.4	0.02
18	SLU 60	-190	1609	10479	-48.36	-8.64	0.02
18	SLU 61	-191	1564	10231	-46.86	-8.62	0.02
18	SLU 62	-192	1622	10545	-48.76	-8.77	0.02
18	SLU 63	-194	1577	10297	-47.27	-8.75	0.02
18	SLU 64	-162	1514	9853	-45.53	-7.65	0.01
18	SLU 65	-164	1440	9440	-43.04	-7.61	0.01
18	SLU 66	-165	1535	9955	-46.18	-7.8	0.01
18	SLU 67	-166	1491	9707	-44.69	-7.77	0.01
18	SLU 68	-167	1453	9505	-43.45	-7.74	0.01
18	SLU 69	-168	1548	10020	-46.58	-7.93	0.01
18	SLU 70	-169	1504	9772	-45.09	-7.91	0.02
18	SLU 71	-167	1541	9984	-46.33	-7.91	0.01
18	SLU 72	-169	1496	9736	-44.84	-7.89	0.02
18	SLU 73	-194	1583	10319	-47.37	-8.74	0.02
18	SLU 74	-195	1678	10835	-50.51	-8.93	0.02
18	SLU 75	-196	1633	10586	-49.02	-8.91	0.02
18	SLU 76	-196	1596	10385	-47.77	-8.87	0.02
18	SLU 77	-197	1691	10900	-50.91	-9.06	0.02
18	SLU 78	-199	1647	10652	-49.42	-9.04	0.02
18	SLU 79	-197	1683	10864	-50.66	-9.04	0.02
18	SLU 80	-198	1639	10615	-49.17	-9.02	0.02
18	SLU 81	-204	1718	11110	-51.71	-9.27	0.02
18	SLU 82	-205	1674	10862	-50.22	-9.24	0.02
18	SLU 83	-207	1732	11175	-52.12	-9.4	0.02
18	SLU 84	-208	1687	10927	-50.62	-9.38	0.02
18	SLE RA 1	-121	1141	7441	-34.29	-5.74	0.01
18	SLE RA 2	-123	1091	7165	-32.63	-5.72	0.01
18	SLE RA 3	-123	1155	7509	-34.72	-5.84	0.01
18	SLE RA 4	-124	1125	7343	-33.72	-5.83	0.01
18	SLE RA 5	-125	1100	7209	-32.9	-5.81	0.01
18	SLE RA 6	-125	1163	7552	-34.99	-5.93	0.01
18	SLE RA 7	-126	1134	7387	-33.99	-5.92	0.01
18	SLE RA 8	-125	1158	7528	-34.82	-5.92	0.01
18	SLE RA 9	-126	1128	7363	-33.83	-5.9	0.01
18	SLE RA 10	-143	1186	7752	-35.51	-6.47	0.01
18	SLE RA 11	-143	1250	8095	-37.6	-6.6	0.01
18	SLE RA 12	-144	1220	7930	-36.61	-6.59	0.01
18	SLE RA 13	-144	1195	7795	-35.78	-6.56	0.01
18	SLE RA 14	-145	1259	8139	-37.87	-6.69	0.01
18	SLE RA 15	-146	1229	7973	-36.88	-6.67	0.01
18	SLE RA 16	-145	1254	8114	-37.71	-6.68	0.01
18	SLE RA 17	-146	1224	7949	-36.71	-6.66	0.01
18	SLE RA 18	-149	1277	8279	-38.41	-6.82	0.01
18	SLE RA 19	-150	1247	8113	-37.41	-6.81	0.01
18	SLE RA 20	-151	1286	8322	-38.68	-6.91	0.01
18	SLE RA 21	-152	1256	8157	-37.68	-6.9	0.01
18	SLE FR 1	-121	1141	7441	-34.29	-5.74	0.01
18	SLE FR 2	-122	1131	7386	-33.95	-5.74	0.01
18	SLE FR 3	-122	1144	7458	-34.39	-5.78	0.01
18	SLE FR 4	-130	1172	7637	-35.19	-6.06	0.01
18	SLE FR 5	-130	1185	7710	-35.63	-6.1	0.01
18	SLE FR 6	-135	1209	7860	-36.35	-6.28	0.01
18	SLE QP 1	-121	1141	7441	-34.29	-5.74	0.01
18	SLE QP 2	-130	1182	7692	-35.52	-6.07	0.01
18	SLD 1	142	1442	8065	-44.46	3.74	-0.05
18	SLD 2	142	1442	8065	-44.46	3.74	-0.05
18	SLD 3	180	1139	6447	-34.24	5.37	-0.06
18	SLD 4	180	1139	6447	-34.24	5.37	-0.06
18	SLD 5	-106	1719	10258	-53.72	-5.59	0.01
18	SLD 6	-106	1719	10258	-53.72	-5.59	0.01
18	SLD 7	21	710	4865	-19.63	-0.17	-0.02
18	SLD 8	21	710	4865	-19.63	-0.17	-0.02

Nodo	Cont.	Reazione a traslazione			Reazione a rotazione		
Ind.	N.br.	x	y	z	x	y	z
18	SLD 9	-280	1654	10520	-51.42	-11.96	0.05
18	SLD 10	-280	1654	10520	-51.42	-11.96	0.05
18	SLD 11	-153	644	5127	-17.33	-6.55	0.01
18	SLD 12	-153	644	5127	-17.33	-6.55	0.01
18	SLD 13	-439	1224	8938	-36.81	-17.5	0.08
18	SLD 14	-439	1224	8938	-36.81	-17.5	0.08
18	SLD 15	-401	921	7320	-26.58	-15.88	0.07
18	SLD 16	-401	921	7320	-26.58	-15.88	0.07
18	SLV 1	503	1793	8573	-56.53	16.83	-0.13
18	SLV 2	503	1793	8573	-56.53	16.83	-0.13
18	SLV 3	593	1081	4760	-32.48	20.64	-0.15
18	SLV 4	593	1081	4760	-32.48	20.64	-0.15
18	SLV 5	-77	2446	13739	-78.31	-4.98	0
18	SLV 6	-77	2446	13739	-78.31	-4.98	0
18	SLV 7	224	71	1031	1.88	7.73	-0.07
18	SLV 8	224	71	1031	1.88	7.73	-0.07
18	SLV 9	-483	2293	14354	-72.92	-19.86	0.09
18	SLV 10	-483	2293	14354	-72.92	-19.86	0.09
18	SLV 11	-183	-83	1646	7.27	-7.15	0.02
18	SLV 12	-183	-83	1646	7.27	-7.15	0.02
18	SLV 13	-852	1282	10624	-38.57	-32.77	0.17
18	SLV 14	-852	1282	10624	-38.57	-32.77	0.17
18	SLV 15	-762	570	6812	-14.51	-28.96	0.15
18	SLV 16	-762	570	6812	-14.51	-28.96	0.15
19	SLU 1	-408	8	4013	-2.68	-11.04	-0.04
19	SLU 2	-390	7	3783	-2.38	-10.55	-0.03
19	SLU 3	-416	8	4064	-2.74	-11.25	-0.04
19	SLU 4	-405	8	3926	-2.55	-10.96	-0.04
19	SLU 5	-395	7	3817	-2.42	-10.68	-0.03
19	SLU 6	-422	8	4098	-2.77	-11.38	-0.04
19	SLU 7	-411	8	3961	-2.59	-11.09	-0.04
19	SLU 8	-419	8	4081	-2.76	-11.3	-0.04
19	SLU 9	-408	8	3943	-2.57	-11.01	-0.04
19	SLU 10	-457	8	4249	-2.71	-12.46	-0.04
19	SLU 11	-484	9	4529	-3.06	-13.16	-0.04
19	SLU 12	-473	8	4392	-2.88	-12.86	-0.04
19	SLU 13	-462	8	4283	-2.74	-12.59	-0.04
19	SLU 14	-489	9	4563	-3.1	-13.29	-0.04
19	SLU 15	-478	9	4426	-2.92	-12.99	-0.04
19	SLU 16	-486	9	4546	-3.08	-13.21	-0.04
19	SLU 17	-475	9	4409	-2.9	-12.92	-0.04
19	SLU 18	-505	9	4677	-3.15	-13.77	-0.04
19	SLU 19	-494	9	4540	-2.97	-13.47	-0.04
19	SLU 20	-510	9	4711	-3.19	-13.9	-0.04
19	SLU 21	-499	9	4574	-3.01	-13.6	-0.04
19	SLU 22	-451	8	4345	-2.93	-12.2	-0.04
19	SLU 23	-433	8	4115	-2.62	-11.71	-0.04
19	SLU 24	-459	9	4396	-2.98	-12.41	-0.04
19	SLU 25	-448	8	4258	-2.8	-12.11	-0.04
19	SLU 26	-438	8	4149	-2.66	-11.84	-0.04
19	SLU 27	-465	9	4430	-3.02	-12.54	-0.04
19	SLU 28	-453	8	4292	-2.84	-12.24	-0.04
19	SLU 29	-462	9	4413	-3	-12.46	-0.04
19	SLU 30	-451	8	4275	-2.82	-12.17	-0.04
19	SLU 31	-500	9	4580	-2.95	-13.61	-0.04
19	SLU 32	-527	10	4861	-3.31	-14.32	-0.04
19	SLU 33	-516	9	4723	-3.13	-14.02	-0.04
19	SLU 34	-505	9	4614	-2.99	-13.75	-0.04
19	SLU 35	-532	10	4895	-3.35	-14.45	-0.05
19	SLU 36	-521	9	4757	-3.17	-14.15	-0.04
19	SLU 37	-529	10	4878	-3.33	-14.37	-0.05
19	SLU 38	-518	9	4740	-3.15	-14.07	-0.04
19	SLU 39	-548	10	5009	-3.4	-14.92	-0.05
19	SLU 40	-536	9	4871	-3.22	-14.63	-0.04
19	SLU 41	-553	10	5043	-3.43	-15.05	-0.05
19	SLU 42	-542	10	4906	-3.25	-14.76	-0.05
19	SLU 43	-516	10	5103	-3.4	-13.96	-0.05
19	SLU 44	-498	9	4873	-3.1	-13.47	-0.04
19	SLU 45	-524	10	5154	-3.46	-14.17	-0.05
19	SLU 46	-513	10	5017	-3.27	-13.87	-0.04
19	SLU 47	-503	9	4908	-3.14	-13.6	-0.04
19	SLU 48	-529	10	5188	-3.49	-14.3	-0.05
19	SLU 49	-518	10	5051	-3.31	-14	-0.05
19	SLU 50	-527	10	5171	-3.48	-14.22	-0.05
19	SLU 51	-516	10	5033	-3.29	-13.93	-0.04
19	SLU 52	-565	10	5339	-3.43	-15.37	-0.05
19	SLU 53	-592	11	5619	-3.78	-16.07	-0.05
19	SLU 54	-580	11	5482	-3.6	-15.78	-0.05
19	SLU 55	-570	10	5373	-3.46	-15.5	-0.05
19	SLU 56	-597	11	5653	-3.82	-16.21	-0.05
19	SLU 57	-586	11	5516	-3.64	-15.91	-0.05
19	SLU 58	-594	11	5636	-3.8	-16.13	-0.05
19	SLU 59	-583	11	5499	-3.62	-15.83	-0.05
19	SLU 60	-612	11	5767	-3.87	-16.68	-0.05
19	SLU 61	-601	11	5630	-3.69	-16.39	-0.05
19	SLU 62	-618	11	5802	-3.91	-16.81	-0.05
19	SLU 63	-607	11	5664	-3.73	-16.52	-0.05
19	SLU 64	-559	11	5435	-3.65	-15.11	-0.05
19	SLU 65	-541	10	5205	-3.34	-14.62	-0.05
19	SLU 66	-567	11	5486	-3.7	-15.32	-0.05

Nodo	Cont.	Reazione a traslazione			Reazione a rotazione		
Ind.	N.br.	x	y	z	x	y	z
19	SLU 67	-556	10	5348	-3.52	-15.03	-0.05
19	SLU 68	-546	10	5239	-3.38	-14.75	-0.05
19	SLU 69	-572	11	5520	-3.74	-15.46	-0.05
19	SLU 70	-561	10	5382	-3.56	-15.16	-0.05
19	SLU 71	-570	11	5503	-3.72	-15.38	-0.05
19	SLU 72	-558	10	5365	-3.54	-15.08	-0.05
19	SLU 73	-608	11	5670	-3.67	-16.53	-0.05
19	SLU 74	-635	12	5951	-4.03	-17.23	-0.05
19	SLU 75	-623	11	5813	-3.85	-16.94	-0.05
19	SLU 76	-613	11	5704	-3.71	-16.66	-0.05
19	SLU 77	-640	12	5985	-4.07	-17.36	-0.05
19	SLU 78	-629	11	5848	-3.89	-17.07	-0.05
19	SLU 79	-637	12	5968	-4.05	-17.28	-0.05
19	SLU 80	-626	11	5830	-3.87	-16.99	-0.05
19	SLU 81	-655	12	6099	-4.12	-17.84	-0.06
19	SLU 82	-644	12	5961	-3.94	-17.54	-0.05
19	SLU 83	-661	12	6133	-4.15	-17.97	-0.06
19	SLU 84	-649	12	5996	-3.97	-17.67	-0.05
19	SLE RA 1	-421	8	4108	-2.75	-11.37	-0.04
19	SLE RA 2	-408	8	3955	-2.55	-11.05	-0.04
19	SLE RA 3	-426	8	4142	-2.79	-11.51	-0.04
19	SLE RA 4	-419	8	4050	-2.67	-11.32	-0.04
19	SLE RA 5	-412	8	3977	-2.57	-11.13	-0.04
19	SLE RA 6	-429	8	4165	-2.81	-11.6	-0.04
19	SLE RA 7	-422	8	4073	-2.69	-11.4	-0.04
19	SLE RA 8	-428	8	4153	-2.8	-11.55	-0.04
19	SLE RA 9	-420	8	4061	-2.68	-11.35	-0.04
19	SLE RA 10	-453	8	4265	-2.77	-12.32	-0.04
19	SLE RA 11	-471	9	4452	-3.01	-12.78	-0.04
19	SLE RA 12	-464	8	4360	-2.89	-12.59	-0.04
19	SLE RA 13	-457	8	4287	-2.79	-12.4	-0.04
19	SLE RA 14	-474	9	4475	-3.03	-12.87	-0.04
19	SLE RA 15	-467	9	4383	-2.91	-12.67	-0.04
19	SLE RA 16	-473	9	4463	-3.02	-12.82	-0.04
19	SLE RA 17	-465	8	4371	-2.9	-12.62	-0.04
19	SLE RA 18	-485	9	4551	-3.07	-13.19	-0.04
19	SLE RA 19	-477	9	4459	-2.94	-12.99	-0.04
19	SLE RA 20	-488	9	4573	-3.09	-13.28	-0.04
19	SLE RA 21	-481	9	4482	-2.97	-13.08	-0.04
19	SLE FR 1	-421	8	4108	-2.75	-11.37	-0.04
19	SLE FR 2	-418	8	4077	-2.71	-11.31	-0.04
19	SLE FR 3	-422	8	4117	-2.76	-11.41	-0.04
19	SLE FR 4	-437	8	4210	-2.81	-11.85	-0.04
19	SLE FR 5	-441	8	4250	-2.86	-11.95	-0.04
19	SLE FR 6	-453	8	4329	-2.91	-12.28	-0.04
19	SLE QP 1	-421	8	4108	-2.75	-11.37	-0.04
19	SLE QP 2	-440	8	4240	-2.85	-11.92	-0.04
19	SLD 1	-222	12	4369	-3.05	-3.98	-0.05
19	SLD 2	-222	12	4369	-3.05	-3.98	-0.05
19	SLD 3	-99	7	3515	-0.28	-0.44	-0.04
19	SLD 4	-99	7	3515	-0.28	-0.44	-0.04
19	SLD 5	-562	16	5574	-7.11	-14.91	-0.06
19	SLD 6	-562	16	5574	-7.11	-14.91	-0.06
19	SLD 7	-150	1	2728	2.12	-3.1	-0.02
19	SLD 8	-150	1	2728	2.12	-3.1	-0.02
19	SLD 9	-730	15	5753	-7.81	-20.74	-0.06
19	SLD 10	-730	15	5753	-7.81	-20.74	-0.06
19	SLD 11	-318	0	2907	1.42	-8.92	-0.02
19	SLD 12	-318	0	2907	1.42	-8.92	-0.02
19	SLD 13	-781	9	4966	-5.41	-23.4	-0.04
19	SLD 14	-781	9	4966	-5.41	-23.4	-0.04
19	SLD 15	-658	5	4112	-2.64	-19.85	-0.03
19	SLD 16	-658	5	4112	-2.64	-19.85	-0.03
19	SLV 1	68	17	4547	-3.34	6.61	-0.06
19	SLV 2	68	17	4547	-3.34	6.61	-0.06
19	SLV 3	358	6	2532	3.16	14.91	-0.04
19	SLV 4	358	6	2532	3.16	14.91	-0.04
19	SLV 5	-727	27	7388	-12.84	-18.95	-0.09
19	SLV 6	-727	27	7388	-12.84	-18.95	-0.09
19	SLV 7	238	-8	672	8.8	8.72	0
19	SLV 8	238	-8	672	8.8	8.72	0
19	SLV 9	-1118	25	7809	-14.49	-32.55	-0.08
19	SLV 10	-1118	25	7809	-14.49	-32.55	-0.08
19	SLV 11	-153	-10	1093	7.15	-4.89	0.01
19	SLV 12	-153	-10	1093	7.15	-4.89	0.01
19	SLV 13	-1237	10	5949	-8.85	-38.74	-0.04
19	SLV 14	-1237	10	5949	-8.85	-38.74	-0.04
19	SLV 15	-948	0	3934	-2.36	-30.44	-0.01
19	SLV 16	-948	0	3934	-2.36	-30.44	-0.01
20	SLU 1	-511	-2	3597	-1.05	-17.74	0.02
20	SLU 2	-492	-1	3390	-0.81	-17.12	0.02
20	SLU 3	-520	-2	3641	-1.07	-18.07	0.02
20	SLU 4	-509	-1	3517	-0.93	-17.69	0.02
20	SLU 5	-498	-1	3420	-0.83	-17.35	0.02
20	SLU 6	-526	-2	3671	-1.09	-18.3	0.02
20	SLU 7	-515	-1	3547	-0.95	-17.93	0.02
20	SLU 8	-523	-2	3658	-1.09	-18.21	0.02
20	SLU 9	-512	-1	3534	-0.94	-17.84	0.02
20	SLU 10	-571	-2	3788	-0.9	-19.75	0.02
20	SLU 11	-598	-2	4039	-1.17	-20.7	0.02

Nodo	Cont.	Reazione a traslazione			Reazione a rotazione		
Ind.	N.br.	x	y	z	x	y	z
20	SLU 12	-587	-2	3915	-1.02	-20.33	0.02
20	SLU 13	-577	-2	3819	-0.92	-19.99	0.02
20	SLU 14	-604	-2	4070	-1.19	-20.94	0.02
20	SLU 15	-593	-2	3946	-1.04	-20.56	0.02
20	SLU 16	-601	-2	4056	-1.19	-20.84	0.02
20	SLU 17	-590	-2	3932	-1.04	-20.47	0.02
20	SLU 18	-623	-2	4166	-1.19	-21.5	0.02
20	SLU 19	-612	-2	4042	-1.04	-21.13	0.02
20	SLU 20	-629	-2	4197	-1.21	-21.74	0.02
20	SLU 21	-618	-2	4073	-1.06	-21.36	0.02
20	SLU 22	-562	-2	3883	-1.12	-19.51	0.02
20	SLU 23	-544	-2	3676	-0.87	-18.89	0.02
20	SLU 24	-571	-2	3927	-1.14	-19.83	0.02
20	SLU 25	-560	-2	3802	-0.99	-19.46	0.02
20	SLU 26	-550	-2	3706	-0.89	-19.12	0.02
20	SLU 27	-577	-2	3957	-1.16	-20.07	0.02
20	SLU 28	-566	-2	3833	-1.01	-19.7	0.02
20	SLU 29	-574	-2	3944	-1.16	-19.98	0.02
20	SLU 30	-563	-2	3820	-1.01	-19.6	0.02
20	SLU 31	-622	-2	4074	-0.97	-21.52	0.02
20	SLU 32	-650	-2	4325	-1.23	-22.47	0.02
20	SLU 33	-638	-2	4201	-1.09	-22.09	0.02
20	SLU 34	-628	-2	4105	-0.99	-21.75	0.02
20	SLU 35	-656	-2	4356	-1.25	-22.7	0.02
20	SLU 36	-644	-2	4232	-1.11	-22.33	0.02
20	SLU 37	-653	-2	4342	-1.25	-22.61	0.02
20	SLU 38	-641	-2	4218	-1.1	-22.24	0.02
20	SLU 39	-674	-2	4452	-1.25	-23.27	0.03
20	SLU 40	-663	-2	4328	-1.11	-22.9	0.02
20	SLU 41	-680	-2	4483	-1.27	-23.5	0.03
20	SLU 42	-669	-2	4359	-1.13	-23.13	0.02
20	SLU 43	-647	-2	4578	-1.35	-22.46	0.03
20	SLU 44	-628	-2	4371	-1.1	-21.83	0.02
20	SLU 45	-656	-2	4622	-1.37	-22.78	0.03
20	SLU 46	-645	-2	4498	-1.22	-22.41	0.02
20	SLU 47	-634	-2	4401	-1.12	-22.07	0.02
20	SLU 48	-662	-2	4652	-1.39	-23.02	0.03
20	SLU 49	-651	-2	4528	-1.24	-22.65	0.02
20	SLU 50	-659	-2	4639	-1.39	-22.93	0.03
20	SLU 51	-648	-2	4515	-1.24	-22.55	0.02
20	SLU 52	-706	-2	4770	-1.2	-24.47	0.03
20	SLU 53	-734	-2	5021	-1.47	-25.42	0.03
20	SLU 54	-723	-2	4896	-1.32	-25.04	0.03
20	SLU 55	-712	-2	4800	-1.22	-24.7	0.03
20	SLU 56	-740	-2	5051	-1.49	-25.65	0.03
20	SLU 57	-729	-2	4927	-1.34	-25.28	0.03
20	SLU 58	-737	-2	5038	-1.48	-25.56	0.03
20	SLU 59	-726	-2	4913	-1.34	-25.19	0.03
20	SLU 60	-759	-2	5147	-1.49	-26.22	0.03
20	SLU 61	-747	-2	5023	-1.34	-25.84	0.03
20	SLU 62	-765	-2	5178	-1.51	-26.45	0.03
20	SLU 63	-753	-2	5054	-1.36	-26.08	0.03
20	SLU 64	-698	-2	4864	-1.41	-24.22	0.03
20	SLU 65	-679	-2	4657	-1.16	-23.6	0.03
20	SLU 66	-707	-2	4908	-1.43	-24.55	0.03
20	SLU 67	-696	-2	4784	-1.28	-24.18	0.03
20	SLU 68	-685	-2	4687	-1.18	-23.84	0.03
20	SLU 69	-713	-2	4938	-1.45	-24.79	0.03
20	SLU 70	-702	-2	4814	-1.3	-24.41	0.03
20	SLU 71	-710	-2	4925	-1.45	-24.69	0.03
20	SLU 72	-699	-2	4801	-1.3	-24.32	0.03
20	SLU 73	-758	-2	5055	-1.26	-26.23	0.03
20	SLU 74	-785	-2	5306	-1.53	-27.18	0.03
20	SLU 75	-774	-2	5182	-1.38	-26.81	0.03
20	SLU 76	-764	-2	5086	-1.28	-26.47	0.03
20	SLU 77	-791	-2	5337	-1.55	-27.42	0.03
20	SLU 78	-780	-2	5213	-1.4	-27.05	0.03
20	SLU 79	-788	-2	5323	-1.55	-27.33	0.03
20	SLU 80	-777	-2	5199	-1.4	-26.95	0.03
20	SLU 81	-810	-2	5433	-1.55	-27.98	0.03
20	SLU 82	-799	-2	5309	-1.4	-27.61	0.03
20	SLU 83	-816	-2	5464	-1.57	-28.22	0.03
20	SLU 84	-805	-2	5340	-1.42	-27.85	0.03
20	SLE RA 1	-526	-2	3679	-1.07	-18.24	0.02
20	SLE RA 2	-513	-2	3541	-0.91	-17.83	0.02
20	SLE RA 3	-532	-2	3708	-1.09	-18.46	0.02
20	SLE RA 4	-524	-2	3625	-0.99	-18.21	0.02
20	SLE RA 5	-517	-2	3561	-0.92	-17.99	0.02
20	SLE RA 6	-536	-2	3728	-1.1	-18.62	0.02
20	SLE RA 7	-528	-2	3645	-1	-18.37	0.02
20	SLE RA 8	-534	-2	3719	-1.1	-18.56	0.02
20	SLE RA 9	-526	-2	3636	-1	-18.31	0.02
20	SLE RA 10	-565	-2	3806	-0.97	-19.59	0.02
20	SLE RA 11	-584	-2	3974	-1.15	-20.22	0.02
20	SLE RA 12	-576	-2	3891	-1.05	-19.97	0.02
20	SLE RA 13	-569	-2	3827	-0.98	-19.74	0.02
20	SLE RA 14	-588	-2	3994	-1.16	-20.37	0.02
20	SLE RA 15	-580	-2	3911	-1.06	-20.13	0.02
20	SLE RA 16	-586	-2	3985	-1.16	-20.31	0.02
20	SLE RA 17	-578	-2	3902	-1.06	-20.07	0.02

Nodo	Cont.	Reazione a traslazione			Reazione a rotazione		
Ind.	N.br.	x	y	z	x	y	z
20	SLE RA 18	-600	-2	4058	-1.16	-20.75	0.02
20	SLE RA 19	-593	-2	3975	-1.07	-20.5	0.02
20	SLE RA 20	-604	-2	4079	-1.18	-20.91	0.02
20	SLE RA 21	-597	-2	3996	-1.08	-20.66	0.02
20	SLE FR 1	-526	-2	3679	-1.07	-18.24	0.02
20	SLE FR 2	-523	-2	3651	-1.04	-18.16	0.02
20	SLE FR 3	-527	-2	3687	-1.08	-18.31	0.02
20	SLE FR 4	-546	-2	3765	-1.07	-18.91	0.02
20	SLE FR 5	-550	-2	3801	-1.1	-19.06	0.02
20	SLE FR 6	-563	-2	3868	-1.12	-19.5	0.02
20	SLE QP 1	-526	-2	3679	-1.07	-18.24	0.02
20	SLE QP 2	-548	-2	3793	-1.1	-19	0.02
20	SLD 1	-327	-2	3767	-1.07	-10.7	0.02
20	SLD 2	-327	-2	3767	-1.07	-10.7	0.02
20	SLD 3	-188	-8	3046	3.27	-6.22	0.01
20	SLD 4	-188	-8	3046	3.27	-6.22	0.01
20	SLD 5	-692	7	4878	-7.68	-23.3	0.04
20	SLD 6	-692	7	4878	-7.68	-23.3	0.04
20	SLD 7	-229	-12	2475	6.8	-8.37	0
20	SLD 8	-229	-12	2475	6.8	-8.37	0
20	SLD 9	-867	9	5110	-9	-29.62	0.05
20	SLD 10	-867	9	5110	-9	-29.62	0.05
20	SLD 11	-404	-11	2707	5.48	-14.69	0
20	SLD 12	-404	-11	2707	5.48	-14.69	0
20	SLD 13	-908	4	4539	-5.47	-31.77	0.03
20	SLD 14	-908	4	4539	-5.47	-31.77	0.03
20	SLD 15	-770	-2	3818	-1.13	-27.29	0.02
20	SLD 16	-770	-2	3818	-1.13	-27.29	0.02
20	SLV 1	-31	-2	3740	-1.04	0.37	0.02
20	SLV 2	-31	-2	3740	-1.04	0.37	0.02
20	SLV 3	294	-15	2036	9.13	10.86	-0.01
20	SLV 4	294	-15	2036	9.13	10.86	-0.01
20	SLV 5	-886	19	6361	-16.51	-29.1	0.07
20	SLV 6	-886	19	6361	-16.51	-29.1	0.07
20	SLV 7	198	-27	681	17.4	5.87	-0.04
20	SLV 8	198	-27	681	17.4	5.87	-0.04
20	SLV 9	-1294	23	6904	-19.59	-43.86	0.08
20	SLV 10	-1294	23	6904	-19.59	-43.86	0.08
20	SLV 11	-210	-23	1224	14.31	-8.9	-0.03
20	SLV 12	-210	-23	1224	14.31	-8.9	-0.03
20	SLV 13	-1390	12	5549	-11.33	-48.86	0.05
20	SLV 14	-1390	12	5549	-11.33	-48.86	0.05
20	SLV 15	-1065	-2	3845	-1.16	-38.37	0.02
20	SLV 16	-1065	-2	3845	-1.16	-38.37	0.02
21	SLU 1	-549	0	3313	-1.17	-16.41	0.01
21	SLU 2	-533	0	3113	-0.87	-15.87	0.01
21	SLU 3	-558	0	3353	-1.19	-16.65	0.01
21	SLU 4	-548	0	3233	-1.01	-16.32	0.01
21	SLU 5	-538	0	3142	-0.9	-16	0.01
21	SLU 6	-563	0	3382	-1.21	-16.78	0.01
21	SLU 7	-553	0	3262	-1.03	-16.46	0.01
21	SLU 8	-560	0	3372	-1.21	-16.67	0.01
21	SLU 9	-550	0	3251	-1.04	-16.35	0.01
21	SLU 10	-615	0	3463	-0.97	-18.39	0.01
21	SLU 11	-641	0	3704	-1.29	-19.17	0.01
21	SLU 12	-630	0	3583	-1.11	-18.85	0.01
21	SLU 13	-620	0	3492	-0.99	-18.53	0.01
21	SLU 14	-646	0	3733	-1.31	-19.31	0.01
21	SLU 15	-636	0	3613	-1.13	-18.98	0.01
21	SLU 16	-642	0	3722	-1.31	-19.2	0.01
21	SLU 17	-632	0	3602	-1.13	-18.88	0.01
21	SLU 18	-667	0	3814	-1.31	-20.01	0.01
21	SLU 19	-657	0	3693	-1.13	-19.69	0.01
21	SLU 20	-673	0	3843	-1.33	-20.15	0.01
21	SLU 21	-663	0	3723	-1.15	-19.82	0.01
21	SLU 22	-603	0	3568	-1.23	-18	0.01
21	SLU 23	-586	0	3368	-0.93	-17.46	0.01
21	SLU 24	-612	0	3608	-1.25	-18.24	0.01
21	SLU 25	-602	0	3488	-1.07	-17.92	0.01
21	SLU 26	-592	0	3397	-0.96	-17.59	0.01
21	SLU 27	-617	0	3637	-1.27	-18.37	0.01
21	SLU 28	-607	0	3517	-1.1	-18.05	0.01
21	SLU 29	-614	0	3627	-1.27	-18.27	0.01
21	SLU 30	-603	0	3506	-1.1	-17.94	0.01
21	SLU 31	-669	0	3718	-1.03	-19.98	0.01
21	SLU 32	-694	0	3959	-1.35	-20.77	0.01
21	SLU 33	-684	0	3838	-1.17	-20.44	0.01
21	SLU 34	-674	0	3747	-1.05	-20.12	0.01
21	SLU 35	-699	0	3988	-1.37	-20.9	0.01
21	SLU 36	-689	0	3868	-1.19	-20.57	0.01
21	SLU 37	-696	0	3977	-1.37	-20.79	0.01
21	SLU 38	-686	0	3857	-1.19	-20.47	0.01
21	SLU 39	-721	0	4069	-1.37	-21.61	0.01
21	SLU 40	-711	0	3948	-1.19	-21.28	0.01
21	SLU 41	-726	0	4098	-1.39	-21.74	0.01
21	SLU 42	-716	0	3978	-1.21	-21.42	0.01
21	SLU 43	-696	0	4220	-1.5	-20.78	0.01
21	SLU 44	-679	0	4019	-1.2	-20.24	0.01
21	SLU 45	-704	0	4260	-1.52	-21.02	0.01
21	SLU 46	-694	0	4139	-1.34	-20.7	0.01

Nodo	Cont.	Reazione a traslazione			Reazione a rotazione		
Ind.	N.br.	x	y	z	x	y	z
21	SLU 47	-684	0	4048	-1.22	-20.38	0.01
21	SLU 48	-709	0	4289	-1.54	-21.16	0.01
21	SLU 49	-699	0	4169	-1.36	-20.83	0.01
21	SLU 50	-706	0	4278	-1.54	-21.05	0.01
21	SLU 51	-696	0	4158	-1.36	-20.73	0.01
21	SLU 52	-762	0	4370	-1.3	-22.77	0.01
21	SLU 53	-787	0	4610	-1.62	-23.55	0.01
21	SLU 54	-777	0	4490	-1.44	-23.22	0.01
21	SLU 55	-767	0	4399	-1.32	-22.9	0.01
21	SLU 56	-792	0	4639	-1.64	-23.68	0.01
21	SLU 57	-782	0	4519	-1.46	-23.36	0.01
21	SLU 58	-789	0	4628	-1.64	-23.57	0.01
21	SLU 59	-779	0	4508	-1.46	-23.25	0.01
21	SLU 60	-814	0	4720	-1.64	-24.39	0.01
21	SLU 61	-804	0	4600	-1.46	-24.07	0.01
21	SLU 62	-819	0	4749	-1.66	-24.52	0.01
21	SLU 63	-809	0	4629	-1.48	-24.2	0.01
21	SLU 64	-750	0	4475	-1.56	-22.38	0.01
21	SLU 65	-733	0	4274	-1.26	-21.84	0.01
21	SLU 66	-758	0	4515	-1.58	-22.62	0.01
21	SLU 67	-748	0	4394	-1.4	-22.29	0.01
21	SLU 68	-738	0	4303	-1.29	-21.97	0.01
21	SLU 69	-763	0	4544	-1.6	-22.75	0.01
21	SLU 70	-753	0	4424	-1.43	-22.43	0.01
21	SLU 71	-760	0	4533	-1.6	-22.64	0.01
21	SLU 72	-750	0	4413	-1.43	-22.32	0.01
21	SLU 73	-815	0	4625	-1.36	-24.36	0.01
21	SLU 74	-841	0	4865	-1.68	-25.14	0.01
21	SLU 75	-831	0	4745	-1.5	-24.82	0.01
21	SLU 76	-821	0	4654	-1.38	-24.49	0.01
21	SLU 77	-846	0	4894	-1.7	-25.27	0.01
21	SLU 78	-836	0	4774	-1.52	-24.95	0.01
21	SLU 79	-843	0	4883	-1.7	-25.17	0.01
21	SLU 80	-832	0	4763	-1.52	-24.84	0.01
21	SLU 81	-868	0	4975	-1.7	-25.98	0.01
21	SLU 82	-857	0	4855	-1.52	-25.66	0.01
21	SLU 83	-873	0	5004	-1.72	-26.12	0.01
21	SLU 84	-863	0	4884	-1.54	-25.79	0.01
21	SLE RA 1	-565	0	3386	-1.18	-16.86	0.01
21	SLE RA 2	-554	0	3252	-0.99	-16.5	0.01
21	SLE RA 3	-570	0	3413	-1.2	-17.02	0.01
21	SLE RA 4	-564	0	3333	-1.08	-16.81	0.01
21	SLE RA 5	-557	0	3272	-1	-16.59	0.01
21	SLE RA 6	-574	0	3432	-1.21	-17.11	0.01
21	SLE RA 7	-567	0	3352	-1.1	-16.9	0.01
21	SLE RA 8	-572	0	3425	-1.21	-17.04	0.01
21	SLE RA 9	-565	0	3345	-1.1	-16.82	0.01
21	SLE RA 10	-609	0	3486	-1.05	-18.19	0.01
21	SLE RA 11	-625	0	3646	-1.26	-18.71	0.01
21	SLE RA 12	-619	0	3566	-1.15	-18.49	0.01
21	SLE RA 13	-612	0	3505	-1.07	-18.27	0.01
21	SLE RA 14	-629	0	3666	-1.28	-18.79	0.01
21	SLE RA 15	-622	0	3586	-1.16	-18.58	0.01
21	SLE RA 16	-627	0	3659	-1.28	-18.72	0.01
21	SLE RA 17	-620	0	3578	-1.16	-18.51	0.01
21	SLE RA 18	-643	0	3720	-1.28	-19.27	0.01
21	SLE RA 19	-637	0	3640	-1.16	-19.05	0.01
21	SLE RA 20	-647	0	3739	-1.29	-19.36	0.01
21	SLE RA 21	-640	0	3659	-1.18	-19.14	0.01
21	SLE FR 1	-565	0	3386	-1.18	-16.86	0.01
21	SLE FR 2	-562	0	3359	-1.15	-16.79	0.01
21	SLE FR 3	-566	0	3394	-1.19	-16.9	0.01
21	SLE FR 4	-586	0	3459	-1.17	-17.51	0.01
21	SLE FR 5	-590	0	3494	-1.22	-17.62	0.01
21	SLE FR 6	-604	0	3553	-1.23	-18.06	0.01
21	SLE QP 1	-565	0	3386	-1.18	-16.86	0.01
21	SLE QP 2	-588	0	3486	-1.21	-17.58	0.01
21	SLD 1	-358	0	3324	-1.02	-9.27	0.01
21	SLD 2	-358	0	3324	-1.02	-9.27	0.01
21	SLD 3	-208	-8	2690	4.69	-4.54	-0.01
21	SLD 4	-208	-8	2690	4.69	-4.54	-0.01
21	SLD 5	-746	11	4398	-9.81	-22.27	0.03
21	SLD 6	-746	11	4398	-9.81	-22.27	0.03
21	SLD 7	-248	-13	2287	9.22	-6.49	-0.03
21	SLD 8	-248	-13	2287	9.22	-6.49	-0.03
21	SLD 9	-929	14	4685	-11.64	-28.68	0.04
21	SLD 10	-929	14	4685	-11.64	-28.68	0.04
21	SLD 11	-431	-11	2574	7.39	-12.9	-0.02
21	SLD 12	-431	-11	2574	7.39	-12.9	-0.02
21	SLD 13	-968	8	4282	-7.12	-30.63	0.03
21	SLD 14	-968	8	4282	-7.12	-30.63	0.03
21	SLD 15	-819	1	3648	-1.41	-25.89	0.01
21	SLD 16	-819	1	3648	-1.41	-25.89	0.01
21	SLV 1	-50	-1	3115	-0.75	1.84	0
21	SLV 2	-50	-1	3115	-0.75	1.84	0
21	SLV 3	300	-18	1613	12.61	12.93	-0.04
21	SLV 4	300	-18	1613	12.61	12.93	-0.04
21	SLV 5	-958	26	5652	-21.34	-28.58	0.07
21	SLV 6	-958	26	5652	-21.34	-28.58	0.07
21	SLV 7	209	-32	647	23.2	8.39	-0.07

Nodo	Cont.	Reazione a traslazione			Reazione a rotazione		
Ind.	N.br.	x	y	z	x	y	z
21	SLV 8	209	-32	647	23.2	8.39	-0.07
21	SLV 9	-1386	32	6325	-25.62	-43.56	0.09
21	SLV 10	-1386	32	6325	-25.62	-43.56	0.09
21	SLV 11	-219	-26	1320	18.91	-6.59	-0.06
21	SLV 12	-219	-26	1320	18.91	-6.59	-0.06
21	SLV 13	-1477	19	5359	-15.03	-48.09	0.05
21	SLV 14	-1477	19	5359	-15.03	-48.09	0.05
21	SLV 15	-1127	1	3857	-1.67	-37	0.01
21	SLV 16	-1127	1	3857	-1.67	-37	0.01
22	SLU 1	-655	2	3028	-1.64	-24	0.01
22	SLU 2	-640	2	2828	-1.3	-23.42	0.01
22	SLU 3	-666	2	3065	-1.67	-24.4	0.01
22	SLU 4	-657	2	2945	-1.46	-24.05	0.01
22	SLU 5	-647	2	2856	-1.32	-23.7	0.01
22	SLU 6	-672	2	3093	-1.7	-24.69	0.01
22	SLU 7	-663	2	2973	-1.49	-24.34	0.01
22	SLU 8	-669	2	3085	-1.7	-24.57	0.01
22	SLU 9	-660	2	2965	-1.49	-24.22	0.01
22	SLU 10	-734	2	3130	-1.45	-26.75	0.01
22	SLU 11	-759	2	3368	-1.82	-27.73	0.01
22	SLU 12	-750	2	3247	-1.62	-27.38	0.01
22	SLU 13	-741	2	3159	-1.48	-27.03	0.01
22	SLU 14	-766	2	3396	-1.85	-28.01	0.01
22	SLU 15	-757	2	3276	-1.64	-27.66	0.01
22	SLU 16	-762	2	3388	-1.85	-27.9	0.01
22	SLU 17	-753	2	3267	-1.64	-27.55	0.01
22	SLU 18	-789	2	3461	-1.86	-28.75	0.01
22	SLU 19	-780	2	3340	-1.65	-28.4	0.01
22	SLU 20	-796	2	3489	-1.89	-29.04	0.01
22	SLU 21	-787	2	3369	-1.68	-28.69	0.01
22	SLU 22	-719	2	3253	-1.75	-26.32	0.01
22	SLU 23	-704	2	3052	-1.4	-25.74	0.01
22	SLU 24	-729	2	3289	-1.78	-26.72	0.01
22	SLU 25	-720	2	3169	-1.57	-26.37	0.01
22	SLU 26	-711	2	3081	-1.43	-26.02	0.01
22	SLU 27	-736	2	3318	-1.81	-27.01	0.01
22	SLU 28	-727	2	3198	-1.6	-26.66	0.01
22	SLU 29	-732	2	3309	-1.81	-26.89	0.01
22	SLU 30	-723	2	3189	-1.6	-26.54	0.01
22	SLU 31	-798	2	3355	-1.56	-29.07	0.01
22	SLU 32	-823	2	3592	-1.93	-30.05	0.01
22	SLU 33	-814	2	3472	-1.72	-29.7	0.01
22	SLU 34	-804	2	3383	-1.58	-29.35	0.01
22	SLU 35	-830	2	3621	-1.96	-30.33	0.01
22	SLU 36	-821	2	3500	-1.75	-29.98	0.01
22	SLU 37	-826	2	3612	-1.96	-30.22	0.01
22	SLU 38	-817	2	3492	-1.75	-29.87	0.01
22	SLU 39	-853	3	3685	-1.97	-31.08	0.01
22	SLU 40	-844	2	3565	-1.76	-30.73	0.01
22	SLU 41	-860	3	3713	-2	-31.36	0.01
22	SLU 42	-851	2	3593	-1.79	-31.01	0.01
22	SLU 43	-830	3	3860	-2.1	-30.41	0.01
22	SLU 44	-815	2	3659	-1.75	-29.83	0.01
22	SLU 45	-840	3	3896	-2.13	-30.81	0.01
22	SLU 46	-832	3	3776	-1.92	-30.46	0.01
22	SLU 47	-822	3	3688	-1.78	-30.11	0.01
22	SLU 48	-847	3	3925	-2.16	-31.09	0.01
22	SLU 49	-838	3	3805	-1.95	-30.74	0.01
22	SLU 50	-843	3	3916	-2.16	-30.98	0.01
22	SLU 51	-834	3	3796	-1.95	-30.63	0.01
22	SLU 52	-909	3	3962	-1.9	-33.15	0.01
22	SLU 53	-934	3	4199	-2.28	-34.13	0.01
22	SLU 54	-925	3	4079	-2.07	-33.78	0.01
22	SLU 55	-916	3	3990	-1.93	-33.43	0.01
22	SLU 56	-941	3	4228	-2.31	-34.42	0.01
22	SLU 57	-932	3	4107	-2.1	-34.07	0.01
22	SLU 58	-937	3	4219	-2.31	-34.3	0.01
22	SLU 59	-928	3	4099	-2.1	-33.95	0.01
22	SLU 60	-964	3	4292	-2.32	-35.16	0.01
22	SLU 61	-955	3	4172	-2.11	-34.81	0.01
22	SLU 62	-971	3	4320	-2.35	-35.44	0.01
22	SLU 63	-962	3	4200	-2.14	-35.09	0.01
22	SLU 64	-894	3	4084	-2.21	-32.73	0.01
22	SLU 65	-879	3	3884	-1.86	-32.15	0.01
22	SLU 66	-904	3	4121	-2.24	-33.13	0.01
22	SLU 67	-895	3	4001	-2.03	-32.78	0.01
22	SLU 68	-885	3	3912	-1.89	-32.43	0.01
22	SLU 69	-911	3	4149	-2.26	-33.41	0.01
22	SLU 70	-902	3	4029	-2.06	-33.06	0.01
22	SLU 71	-907	3	4141	-2.26	-33.3	0.01
22	SLU 72	-898	3	4021	-2.05	-32.95	0.01
22	SLU 73	-973	3	4186	-2.01	-35.47	0.01
22	SLU 74	-998	3	4424	-2.39	-36.46	0.01
22	SLU 75	-989	3	4303	-2.18	-36.11	0.01
22	SLU 76	-979	3	4215	-2.04	-35.76	0.01
22	SLU 77	-1004	3	4452	-2.42	-36.74	0.01
22	SLU 78	-995	3	4332	-2.21	-36.39	0.01
22	SLU 79	-1001	3	4444	-2.42	-36.62	0.01
22	SLU 80	-992	3	4323	-2.21	-36.27	0.01
22	SLU 81	-1028	3	4516	-2.42	-37.48	0.01

Nodo	Cont.	Reazione a traslazione			Reazione a rotazione		
Ind.	N.br.	x	y	z	x	y	z
22	SLU 82	-1019	3	4396	-2.22	-37.13	0.01
22	SLU 83	-1034	3	4545	-2.45	-37.76	0.01
22	SLU 84	-1025	3	4425	-2.24	-37.41	0.01
22	SLE RA 1	-674	2	3092	-1.67	-24.67	0.01
22	SLE RA 2	-664	2	2959	-1.44	-24.28	0.01
22	SLE RA 3	-680	2	3117	-1.69	-24.93	0.01
22	SLE RA 4	-674	2	3037	-1.55	-24.7	0.01
22	SLE RA 5	-668	2	2978	-1.46	-24.47	0.01
22	SLE RA 6	-685	2	3136	-1.71	-25.12	0.01
22	SLE RA 7	-679	2	3056	-1.57	-24.89	0.01
22	SLE RA 8	-682	2	3130	-1.71	-25.04	0.01
22	SLE RA 9	-676	2	3050	-1.57	-24.81	0.01
22	SLE RA 10	-726	2	3160	-1.54	-26.49	0.01
22	SLE RA 11	-743	2	3319	-1.79	-27.15	0.01
22	SLE RA 12	-737	2	3238	-1.66	-26.92	0.01
22	SLE RA 13	-731	2	3179	-1.56	-26.68	0.01
22	SLE RA 14	-747	2	3338	-1.81	-27.34	0.01
22	SLE RA 15	-741	2	3257	-1.67	-27.11	0.01
22	SLE RA 16	-745	2	3332	-1.81	-27.26	0.01
22	SLE RA 17	-739	2	3252	-1.67	-27.03	0.01
22	SLE RA 18	-763	2	3381	-1.82	-27.83	0.01
22	SLE RA 19	-757	2	3300	-1.68	-27.6	0.01
22	SLE RA 20	-767	2	3399	-1.84	-28.02	0.01
22	SLE RA 21	-761	2	3319	-1.7	-27.79	0.01
22	SLE FR 1	-674	2	3092	-1.67	-24.67	0.01
22	SLE FR 2	-672	2	3065	-1.63	-24.59	0.01
22	SLE FR 3	-675	2	3100	-1.68	-24.74	0.01
22	SLE FR 4	-698	2	3152	-1.67	-25.54	0.01
22	SLE FR 5	-702	2	3186	-1.72	-25.69	0.01
22	SLE FR 6	-718	2	3236	-1.75	-26.25	0.01
22	SLE QP 1	-674	2	3092	-1.67	-24.67	0.01
22	SLE QP 2	-700	2	3179	-1.72	-25.62	0.01
22	SLD 1	-441	2	2909	-1.43	-15.82	0.01
22	SLD 2	-441	2	2909	-1.43	-15.82	0.01
22	SLD 3	-278	-7	2350	4.97	-10.24	-0.02
22	SLD 4	-278	-7	2350	4.97	-10.24	-0.02
22	SLD 5	-870	15	3945	-11.33	-31.14	0.04
22	SLD 6	-870	15	3945	-11.33	-31.14	0.04
22	SLD 7	-326	-13	2083	9.98	-12.55	-0.04
22	SLD 8	-326	-13	2083	9.98	-12.55	-0.04
22	SLD 9	-1075	18	4275	-13.42	-38.69	0.05
22	SLD 10	-1075	18	4275	-13.42	-38.69	0.05
22	SLD 11	-531	-10	2412	7.89	-20.1	-0.03
22	SLD 12	-531	-10	2412	7.89	-20.1	-0.03
22	SLD 13	-1123	11	4007	-8.4	-41	0.03
22	SLD 14	-1123	11	4007	-8.4	-41	0.03
22	SLD 15	-960	3	3449	-2.01	-35.42	0.01
22	SLD 16	-960	3	3449	-2.01	-35.42	0.01
22	SLV 1	-94	1	2558	-1.04	-2.7	0
22	SLV 2	-94	1	2558	-1.04	-2.7	0
22	SLV 3	288	-19	1227	13.92	10.36	-0.05
22	SLV 4	288	-19	1227	13.92	10.36	-0.05
22	SLV 5	-1098	31	5011	-24.2	-38.55	0.09
22	SLV 6	-1098	31	5011	-24.2	-38.55	0.09
22	SLV 7	176	-34	574	25.66	4.99	-0.09
22	SLV 8	176	-34	574	25.66	4.99	-0.09
22	SLV 9	-1577	38	5783	-29.1	-56.22	0.11
22	SLV 10	-1577	38	5783	-29.1	-56.22	0.11
22	SLV 11	-303	-27	1346	20.77	-12.68	-0.08
22	SLV 12	-303	-27	1346	20.77	-12.68	-0.08
22	SLV 13	-1689	23	5131	-17.36	-61.6	0.07
22	SLV 14	-1689	23	5131	-17.36	-61.6	0.07
22	SLV 15	-1306	4	3799	-2.4	-48.53	0.01
22	SLV 16	-1306	4	3799	-2.4	-48.53	0.01
23	SLU 1	-631	3	2766	-1.89	-18.78	0.01
23	SLU 2	-621	3	2558	-1.53	-18.43	0.01
23	SLU 3	-640	3	2801	-1.93	-19.01	0.01
23	SLU 4	-634	3	2675	-1.71	-18.8	0.01
23	SLU 5	-626	3	2586	-1.56	-18.54	0.01
23	SLU 6	-645	3	2829	-1.96	-19.13	0.01
23	SLU 7	-639	3	2704	-1.74	-18.92	0.01
23	SLU 8	-641	3	2823	-1.96	-19.01	0.01
23	SLU 9	-635	3	2698	-1.74	-18.8	0.01
23	SLU 10	-712	3	2815	-1.72	-21.2	0.01
23	SLU 11	-731	3	3058	-2.11	-21.78	0.01
23	SLU 12	-725	3	2933	-1.9	-21.57	0.01
23	SLU 13	-717	3	2844	-1.75	-21.31	0.01
23	SLU 14	-736	3	3087	-2.15	-21.9	0.01
23	SLU 15	-730	3	2962	-1.93	-21.69	0.01
23	SLU 16	-732	3	3081	-2.14	-21.77	0.01
23	SLU 17	-726	3	2956	-1.93	-21.57	0.01
23	SLU 18	-761	3	3134	-2.16	-22.73	0.01
23	SLU 19	-755	3	3009	-1.95	-22.52	0.01
23	SLU 20	-766	3	3163	-2.19	-22.85	0.01
23	SLU 21	-760	3	3038	-1.98	-22.64	0.01
23	SLU 22	-692	3	2962	-2.03	-20.56	0.01
23	SLU 23	-682	3	2754	-1.67	-20.21	0.01
23	SLU 24	-701	3	2996	-2.07	-20.79	0.01
23	SLU 25	-695	3	2871	-1.85	-20.58	0.01
23	SLU 26	-687	3	2782	-1.7	-20.32	0.01

Nodo	Cont.	Reazione a traslazione			Reazione a rotazione		
Ind.	N.br.	x	y	z	x	y	z
23	SLU 27	-706	3	3025	-2.1	-20.91	0.01
23	SLU 28	-700	3	2900	-1.88	-20.7	0.01
23	SLU 29	-702	3	3019	-2.09	-20.79	0.01
23	SLU 30	-696	3	2894	-1.88	-20.58	0.01
23	SLU 31	-773	3	3011	-1.86	-22.98	0.01
23	SLU 32	-791	4	3254	-2.25	-23.56	0.01
23	SLU 33	-786	3	3129	-2.04	-23.35	0.01
23	SLU 34	-778	3	3040	-1.89	-23.09	0.01
23	SLU 35	-796	4	3282	-2.28	-23.68	0.01
23	SLU 36	-791	3	3157	-2.07	-23.47	0.01
23	SLU 37	-793	4	3277	-2.28	-23.56	0.01
23	SLU 38	-787	3	3151	-2.07	-23.35	0.01
23	SLU 39	-822	4	3330	-2.3	-24.51	0.01
23	SLU 40	-816	4	3205	-2.09	-24.3	0.01
23	SLU 41	-827	4	3359	-2.33	-24.63	0.01
23	SLU 42	-821	4	3233	-2.12	-24.42	0.01
23	SLU 43	-800	4	3529	-2.42	-23.8	0.01
23	SLU 44	-790	4	3320	-2.05	-23.45	0.01
23	SLU 45	-808	4	3563	-2.45	-24.04	0.01
23	SLU 46	-803	4	3438	-2.23	-23.83	0.01
23	SLU 47	-795	4	3349	-2.08	-23.57	0.01
23	SLU 48	-813	4	3592	-2.48	-24.15	0.01
23	SLU 49	-808	4	3467	-2.26	-23.94	0.01
23	SLU 50	-810	4	3586	-2.48	-24.03	0.01
23	SLU 51	-804	4	3461	-2.26	-23.82	0.01
23	SLU 52	-881	4	3578	-2.24	-26.22	0.01
23	SLU 53	-899	4	3821	-2.64	-26.8	0.01
23	SLU 54	-893	4	3696	-2.42	-26.59	0.01
23	SLU 55	-886	4	3606	-2.27	-26.33	0.01
23	SLU 56	-904	4	3849	-2.67	-26.92	0.01
23	SLU 57	-898	4	3724	-2.45	-26.71	0.01
23	SLU 58	-901	4	3843	-2.66	-26.8	0.01
23	SLU 59	-895	4	3718	-2.45	-26.59	0.01
23	SLU 60	-930	4	3897	-2.68	-27.76	0.01
23	SLU 61	-924	4	3772	-2.47	-27.55	0.01
23	SLU 62	-935	4	3925	-2.71	-27.87	0.01
23	SLU 63	-929	4	3800	-2.5	-27.66	0.01
23	SLU 64	-860	4	3725	-2.56	-25.58	0.01
23	SLU 65	-851	4	3516	-2.19	-25.23	0.01
23	SLU 66	-869	4	3759	-2.59	-25.82	0.01
23	SLU 67	-863	4	3634	-2.37	-25.61	0.01
23	SLU 68	-856	4	3545	-2.22	-25.35	0.01
23	SLU 69	-874	4	3788	-2.62	-25.93	0.01
23	SLU 70	-868	4	3662	-2.4	-25.72	0.01
23	SLU 71	-870	4	3782	-2.62	-25.81	0.01
23	SLU 72	-865	4	3657	-2.4	-25.6	0.01
23	SLU 73	-941	4	3774	-2.38	-28	0.01
23	SLU 74	-960	4	4017	-2.78	-28.58	0.01
23	SLU 75	-954	4	3892	-2.56	-28.37	0.01
23	SLU 76	-946	4	3802	-2.41	-28.11	0.01
23	SLU 77	-965	4	4045	-2.81	-28.7	0.01
23	SLU 78	-959	4	3920	-2.59	-28.49	0.01
23	SLU 79	-961	4	4039	-2.8	-28.58	0.01
23	SLU 80	-955	4	3914	-2.59	-28.37	0.01
23	SLU 81	-990	4	4093	-2.82	-29.54	0.01
23	SLU 82	-984	4	3968	-2.61	-29.33	0.01
23	SLU 83	-995	4	4121	-2.85	-29.65	0.01
23	SLU 84	-989	4	3996	-2.64	-29.44	0.01
23	SLE RA 1	-649	3	2822	-1.93	-19.29	0.01
23	SLE RA 2	-642	3	2683	-1.69	-19.05	0.01
23	SLE RA 3	-654	3	2845	-1.96	-19.44	0.01
23	SLE RA 4	-650	3	2762	-1.81	-19.3	0.01
23	SLE RA 5	-645	3	2702	-1.71	-19.13	0.01
23	SLE RA 6	-658	3	2864	-1.98	-19.52	0.01
23	SLE RA 7	-654	3	2781	-1.83	-19.38	0.01
23	SLE RA 8	-655	3	2860	-1.98	-19.44	0.01
23	SLE RA 9	-651	3	2777	-1.83	-19.3	0.01
23	SLE RA 10	-703	3	2855	-1.82	-20.9	0.01
23	SLE RA 11	-715	3	3017	-2.08	-21.29	0.01
23	SLE RA 12	-711	3	2933	-1.94	-21.15	0.01
23	SLE RA 13	-706	3	2874	-1.84	-20.98	0.01
23	SLE RA 14	-718	3	3036	-2.1	-21.37	0.01
23	SLE RA 15	-714	3	2952	-1.96	-21.23	0.01
23	SLE RA 16	-716	3	3032	-2.1	-21.28	0.01
23	SLE RA 17	-712	3	2948	-1.96	-21.14	0.01
23	SLE RA 18	-735	3	3068	-2.11	-21.92	0.01
23	SLE RA 19	-731	3	2984	-1.97	-21.78	0.01
23	SLE RA 20	-738	3	3087	-2.13	-22	0.01
23	SLE RA 21	-734	3	3003	-1.99	-21.86	0.01
23	SLE FR 1	-649	3	2822	-1.93	-19.29	0.01
23	SLE FR 2	-647	3	2794	-1.89	-19.24	0.01
23	SLE FR 3	-650	3	2830	-1.94	-19.32	0.01
23	SLE FR 4	-673	3	2868	-1.94	-20.03	0.01
23	SLE FR 5	-676	3	2903	-2	-20.11	0.01
23	SLE FR 6	-692	3	2945	-2.02	-20.6	0.01
23	SLE QP 1	-649	3	2822	-1.93	-19.29	0.01
23	SLE QP 2	-674	3	2896	-1.99	-20.08	0.01
23	SLD 1	-397	2	2549	-1.68	-10.22	0.01
23	SLD 2	-397	2	2549	-1.68	-10.22	0.01
23	SLD 3	-235	-5	2043	4.46	-5.07	-0.02

Nodo	Cont.	Reazione a traslazione			Reazione a rotazione		
Ind.	N.br.	x	y	z	x	y	z
23	SLD 4	-235	-5	2043	4.46	-5.07	-0.02
23	SLD 5	-836	15	3560	-11.2	-24.92	0.04
23	SLD 6	-836	15	3560	-11.2	-24.92	0.04
23	SLD 7	-297	-11	1872	9.25	-7.78	-0.03
23	SLD 8	-297	-11	1872	9.25	-7.78	-0.03
23	SLD 9	-1052	17	3920	-13.23	-32.38	0.05
23	SLD 10	-1052	17	3920	-13.23	-32.38	0.05
23	SLD 11	-513	-8	2231	7.22	-15.24	-0.02
23	SLD 12	-513	-8	2231	7.22	-15.24	-0.02
23	SLD 13	-1114	11	3749	-8.43	-35.08	0.03
23	SLD 14	-1114	11	3749	-8.43	-35.08	0.03
23	SLD 15	-952	4	3242	-2.3	-29.94	0.01
23	SLD 16	-952	4	3242	-2.3	-29.94	0.01
23	SLV 1	-25	2	2100	-1.26	2.98	0
23	SLV 2	-25	2	2100	-1.26	2.98	0
23	SLV 3	354	-16	884	13.1	15.04	-0.05
23	SLV 4	354	-16	884	13.1	15.04	-0.05
23	SLV 5	-1055	30	4501	-23.54	-31.46	0.09
23	SLV 6	-1055	30	4501	-23.54	-31.46	0.09
23	SLV 7	209	-30	448	24.31	8.75	-0.09
23	SLV 8	209	-30	448	24.31	8.75	-0.09
23	SLV 9	-1558	36	5343	-28.28	-48.91	0.11
23	SLV 10	-1558	36	5343	-28.28	-48.91	0.11
23	SLV 11	-294	-24	1291	19.56	-8.7	-0.07
23	SLV 12	-294	-24	1291	19.56	-8.7	-0.07
23	SLV 13	-1703	23	4908	-17.07	-55.19	0.07
23	SLV 14	-1703	23	4908	-17.07	-55.19	0.07
23	SLV 15	-1324	5	3692	-2.72	-43.13	0.01
23	SLV 16	-1324	5	3692	-2.72	-43.13	0.01
24	SLU 1	-724	3	2528	-1.8	-27.7	0.01
24	SLU 2	-717	3	2301	-1.46	-27.29	0.01
24	SLU 3	-734	3	2560	-1.83	-28.14	0.01
24	SLU 4	-730	3	2424	-1.63	-27.9	0.01
24	SLU 5	-723	3	2330	-1.49	-27.61	0.01
24	SLU 6	-741	3	2589	-1.86	-28.47	0.01
24	SLU 7	-737	3	2453	-1.65	-28.22	0.01
24	SLU 8	-738	3	2586	-1.85	-28.34	0.01
24	SLU 9	-733	3	2450	-1.65	-28.1	0.01
24	SLU 10	-816	3	2516	-1.64	-30.96	0.01
24	SLU 11	-834	3	2775	-2.01	-31.81	0.01
24	SLU 12	-829	3	2639	-1.81	-31.57	0.01
24	SLU 13	-823	3	2545	-1.67	-31.28	0.01
24	SLU 14	-841	3	2804	-2.04	-32.14	0.01
24	SLU 15	-836	3	2668	-1.84	-31.89	0.01
24	SLU 16	-837	3	2801	-2.04	-32.01	0.01
24	SLU 17	-833	3	2665	-1.83	-31.77	0.01
24	SLU 18	-866	3	2835	-2.06	-32.94	0.01
24	SLU 19	-862	3	2699	-1.86	-32.69	0.01
24	SLU 20	-873	3	2864	-2.09	-33.26	0.01
24	SLU 21	-868	3	2728	-1.88	-33.02	0.01
24	SLU 22	-793	3	2697	-1.94	-30.35	0.01
24	SLU 23	-786	3	2470	-1.6	-29.94	0.01
24	SLU 24	-804	3	2729	-1.97	-30.79	0.01
24	SLU 25	-799	3	2593	-1.77	-30.55	0.01
24	SLU 26	-793	3	2499	-1.63	-30.26	0.01
24	SLU 27	-811	3	2758	-2	-31.11	0.01
24	SLU 28	-806	3	2622	-1.79	-30.87	0.01
24	SLU 29	-807	3	2754	-2	-30.99	0.01
24	SLU 30	-803	3	2619	-1.79	-30.75	0.01
24	SLU 31	-885	3	2685	-1.78	-33.61	0.01
24	SLU 32	-903	3	2944	-2.15	-34.46	0.01
24	SLU 33	-899	3	2808	-1.95	-34.21	0.01
24	SLU 34	-892	3	2714	-1.81	-33.93	0.01
24	SLU 35	-910	4	2973	-2.18	-34.78	0.01
24	SLU 36	-906	3	2837	-1.98	-34.54	0.01
24	SLU 37	-906	4	2969	-2.18	-34.66	0.01
24	SLU 38	-902	3	2833	-1.97	-34.42	0.01
24	SLU 39	-935	4	3004	-2.2	-35.59	0.01
24	SLU 40	-931	4	2868	-2	-35.34	0.01
24	SLU 41	-942	4	3032	-2.23	-35.91	0.01
24	SLU 42	-938	4	2896	-2.02	-35.66	0.01
24	SLU 43	-917	4	3229	-2.29	-35.1	0.01
24	SLU 44	-910	3	3002	-1.95	-34.69	0.01
24	SLU 45	-928	4	3261	-2.32	-35.55	0.01
24	SLU 46	-923	4	3125	-2.12	-35.3	0.01
24	SLU 47	-917	3	3031	-1.98	-35.02	0.01
24	SLU 48	-935	4	3290	-2.35	-35.87	0.01
24	SLU 49	-930	4	3154	-2.14	-35.62	0.01
24	SLU 50	-931	4	3286	-2.35	-35.75	0.01
24	SLU 51	-927	4	3150	-2.14	-35.5	0.01
24	SLU 52	-1009	4	3217	-2.13	-38.36	0.01
24	SLU 53	-1027	4	3476	-2.51	-39.21	0.01
24	SLU 54	-1023	4	3340	-2.3	-38.97	0.01
24	SLU 55	-1016	4	3246	-2.16	-38.68	0.01
24	SLU 56	-1034	4	3505	-2.53	-39.54	0.01
24	SLU 57	-1030	4	3369	-2.33	-39.29	0.01
24	SLU 58	-1030	4	3501	-2.53	-39.42	0.01
24	SLU 59	-1026	4	3365	-2.32	-39.17	0.01
24	SLU 60	-1059	4	3535	-2.55	-40.34	0.01
24	SLU 61	-1055	4	3400	-2.35	-40.1	0.01

Nodo	Cont.	Reazione a traslazione			Reazione a rotazione		
Ind.	N.br.	x	y	z	x	y	z
24	SLU 62	-1066	4	3564	-2.58	-40.66	0.01
24	SLU 63	-1062	4	3428	-2.38	-40.42	0.01
24	SLU 64	-986	4	3397	-2.43	-37.75	0.01
24	SLU 65	-979	4	3171	-2.09	-37.34	0.01
24	SLU 66	-997	4	3430	-2.46	-38.19	0.01
24	SLU 67	-993	4	3294	-2.26	-37.95	0.01
24	SLU 68	-986	4	3200	-2.12	-37.66	0.01
24	SLU 69	-1004	4	3459	-2.49	-38.52	0.01
24	SLU 70	-1000	4	3323	-2.29	-38.27	0.01
24	SLU 71	-1000	4	3455	-2.49	-38.39	0.01
24	SLU 72	-996	4	3319	-2.28	-38.15	0.01
24	SLU 73	-1079	4	3385	-2.27	-41.01	0.01
24	SLU 74	-1097	4	3644	-2.65	-41.86	0.01
24	SLU 75	-1092	4	3509	-2.44	-41.62	0.01
24	SLU 76	-1086	4	3414	-2.3	-41.33	0.01
24	SLU 77	-1103	4	3673	-2.67	-42.18	0.01
24	SLU 78	-1099	4	3537	-2.47	-41.94	0.01
24	SLU 79	-1100	4	3670	-2.67	-42.06	0.01
24	SLU 80	-1095	4	3534	-2.46	-41.82	0.01
24	SLU 81	-1129	4	3704	-2.69	-42.99	0.01
24	SLU 82	-1124	4	3568	-2.49	-42.74	0.01
24	SLU 83	-1135	4	3733	-2.72	-43.31	0.01
24	SLU 84	-1131	4	3597	-2.52	-43.07	0.01
24	SLE RA 1	-744	3	2576	-1.84	-28.45	0.01
24	SLE RA 2	-739	3	2425	-1.61	-28.18	0.01
24	SLE RA 3	-751	3	2598	-1.86	-28.75	0.01
24	SLE RA 4	-748	3	2507	-1.72	-28.59	0.01
24	SLE RA 5	-743	3	2444	-1.63	-28.4	0.01
24	SLE RA 6	-755	3	2617	-1.88	-28.97	0.01
24	SLE RA 7	-752	3	2526	-1.74	-28.8	0.01
24	SLE RA 8	-753	3	2615	-1.88	-28.89	0.01
24	SLE RA 9	-750	3	2524	-1.74	-28.72	0.01
24	SLE RA 10	-805	3	2568	-1.74	-30.63	0.01
24	SLE RA 11	-817	3	2741	-1.98	-31.2	0.01
24	SLE RA 12	-814	3	2650	-1.85	-31.03	0.01
24	SLE RA 13	-810	3	2588	-1.75	-30.84	0.01
24	SLE RA 14	-822	3	2760	-2	-31.41	0.01
24	SLE RA 15	-819	3	2670	-1.86	-31.25	0.01
24	SLE RA 16	-819	3	2758	-2	-31.33	0.01
24	SLE RA 17	-816	3	2667	-1.86	-31.17	0.01
24	SLE RA 18	-838	3	2781	-2.01	-31.95	0.01
24	SLE RA 19	-835	3	2690	-1.88	-31.79	0.01
24	SLE RA 20	-843	3	2800	-2.03	-32.16	0.01
24	SLE RA 21	-840	3	2709	-1.9	-32	0.01
24	SLE FR 1	-744	3	2576	-1.84	-28.45	0.01
24	SLE FR 2	-743	3	2546	-1.8	-28.4	0.01
24	SLE FR 3	-745	3	2584	-1.85	-28.54	0.01
24	SLE FR 4	-771	3	2607	-1.85	-29.45	0.01
24	SLE FR 5	-774	3	2645	-1.9	-29.59	0.01
24	SLE FR 6	-791	3	2678	-1.93	-30.2	0.01
24	SLE QP 1	-744	3	2576	-1.84	-28.45	0.01
24	SLE QP 2	-772	3	2638	-1.89	-29.5	0.01
24	SLD 1	-463	3	2241	-1.63	-17.67	0.01
24	SLD 2	-463	3	2241	-1.63	-17.67	0.01
24	SLD 3	-294	-3	1751	3.34	-11.74	-0.01
24	SLD 4	-294	-3	1751	3.34	-11.74	-0.01
24	SLD 5	-936	11	3262	-9.35	-34.95	0.03
24	SLD 6	-936	11	3262	-9.35	-34.95	0.03
24	SLD 7	-372	-7	1628	7.21	-15.17	-0.02
24	SLD 8	-372	-7	1628	7.21	-15.17	-0.02
24	SLD 9	-1172	13	3647	-11	-43.83	0.03
24	SLD 10	-1172	13	3647	-11	-43.83	0.03
24	SLD 11	-608	-5	2013	5.57	-24.05	-0.01
24	SLD 12	-608	-5	2013	5.57	-24.05	-0.01
24	SLD 13	-1250	9	3525	-7.12	-47.27	0.02
24	SLD 14	-1250	9	3525	-7.12	-47.27	0.02
24	SLD 15	-1081	3	3034	-2.15	-41.34	0.01
24	SLD 16	-1081	3	3034	-2.15	-41.34	0.01
24	SLV 1	-50	2	1728	-1.28	-1.83	0.01
24	SLV 2	-50	2	1728	-1.28	-1.83	0.01
24	SLV 3	347	-11	541	10.35	12.08	-0.03
24	SLV 4	347	-11	541	10.35	12.08	-0.03
24	SLV 5	-1157	22	4164	-19.34	-42.29	0.06
24	SLV 6	-1157	22	4164	-19.34	-42.29	0.06
24	SLV 7	165	-20	209	19.41	4.06	-0.05
24	SLV 8	165	-20	209	19.41	4.06	-0.05
24	SLV 9	-1709	26	5066	-23.2	-63.07	0.07
24	SLV 10	-1709	26	5066	-23.2	-63.07	0.07
24	SLV 11	-387	-16	1111	15.56	-16.72	-0.04
24	SLV 12	-387	-16	1111	15.56	-16.72	-0.04
24	SLV 13	-1891	17	4734	-14.13	-71.08	0.04
24	SLV 14	-1891	17	4734	-14.13	-71.08	0.04
24	SLV 15	-1494	4	3547	-2.51	-57.18	0.01
24	SLV 16	-1494	4	3547	-2.51	-57.18	0.01
25	SLU 1	-674	2	2338	-1.45	-20.15	0
25	SLU 2	-671	2	2080	-1.12	-19.91	0
25	SLU 3	-683	2	2370	-1.47	-20.38	0
25	SLU 4	-681	2	2215	-1.27	-20.24	0
25	SLU 5	-676	2	2110	-1.14	-20.03	0
25	SLU 6	-689	2	2400	-1.49	-20.5	0

Nodo	Cont.	Reazione a traslazione			Reazione a rotazione		
Ind.	N.br.	x	y	z	x	y	z
25	SLU 7	-686	2	2245	-1.29	-20.35	0
25	SLU 8	-685	2	2399	-1.49	-20.38	0
25	SLU 9	-683	2	2244	-1.29	-20.24	0
25	SLU 10	-762	2	2258	-1.26	-22.69	0
25	SLU 11	-774	2	2547	-1.61	-23.16	0
25	SLU 12	-772	2	2392	-1.41	-23.01	0
25	SLU 13	-767	2	2288	-1.28	-22.8	0
25	SLU 14	-780	2	2578	-1.63	-23.27	0
25	SLU 15	-777	2	2423	-1.43	-23.13	0
25	SLU 16	-776	2	2576	-1.63	-23.16	0
25	SLU 17	-774	2	2421	-1.43	-23.02	0
25	SLU 18	-805	2	2592	-1.65	-24.12	0
25	SLU 19	-802	2	2437	-1.45	-23.97	0
25	SLU 20	-810	2	2622	-1.67	-24.23	0
25	SLU 21	-808	2	2467	-1.47	-24.09	0
25	SLU 22	-737	2	2484	-1.56	-21.98	0
25	SLU 23	-733	2	2225	-1.23	-21.74	0
25	SLU 24	-746	2	2515	-1.58	-22.21	0
25	SLU 25	-744	2	2360	-1.38	-22.07	0
25	SLU 26	-739	2	2255	-1.25	-21.86	0
25	SLU 27	-751	2	2545	-1.6	-22.33	0
25	SLU 28	-749	2	2390	-1.4	-22.19	0
25	SLU 29	-748	2	2544	-1.6	-22.22	0
25	SLU 30	-746	2	2389	-1.4	-22.07	0
25	SLU 31	-825	2	2403	-1.37	-24.52	0
25	SLU 32	-837	2	2693	-1.72	-24.99	0
25	SLU 33	-835	2	2538	-1.52	-24.85	0
25	SLU 34	-830	2	2433	-1.39	-24.64	0
25	SLU 35	-843	2	2723	-1.74	-25.11	0
25	SLU 36	-840	2	2568	-1.54	-24.96	0
25	SLU 37	-839	2	2721	-1.74	-24.99	0
25	SLU 38	-837	2	2566	-1.54	-24.85	0
25	SLU 39	-867	3	2737	-1.76	-25.95	0
25	SLU 40	-865	2	2582	-1.56	-25.81	0
25	SLU 41	-873	3	2767	-1.78	-26.07	0
25	SLU 42	-871	3	2612	-1.58	-25.92	0
25	SLU 43	-855	3	2990	-1.84	-25.57	0
25	SLU 44	-851	2	2732	-1.51	-25.33	0
25	SLU 45	-864	3	3022	-1.87	-25.8	0
25	SLU 46	-862	2	2867	-1.67	-25.65	0
25	SLU 47	-857	2	2762	-1.53	-25.44	0
25	SLU 48	-869	3	3052	-1.89	-25.91	0
25	SLU 49	-867	2	2897	-1.69	-25.77	0
25	SLU 50	-866	3	3050	-1.88	-25.8	0
25	SLU 51	-864	2	2895	-1.68	-25.66	0
25	SLU 52	-942	3	2909	-1.65	-28.11	0
25	SLU 53	-955	3	3199	-2.01	-28.58	0
25	SLU 54	-953	3	3044	-1.81	-28.43	0
25	SLU 55	-948	3	2940	-1.67	-28.22	0
25	SLU 56	-960	3	3229	-2.03	-28.69	0
25	SLU 57	-958	3	3074	-1.83	-28.55	0
25	SLU 58	-957	3	3228	-2.02	-28.58	0
25	SLU 59	-955	3	3073	-1.83	-28.43	0
25	SLU 60	-985	3	3244	-2.05	-29.54	0
25	SLU 61	-983	3	3089	-1.85	-29.39	0
25	SLU 62	-991	3	3274	-2.06	-29.65	0
25	SLU 63	-988	3	3119	-1.87	-29.51	0
25	SLU 64	-918	3	3135	-1.96	-27.4	0
25	SLU 65	-914	3	2877	-1.62	-27.16	0
25	SLU 66	-927	3	3167	-1.98	-27.63	0
25	SLU 67	-924	3	3012	-1.78	-27.49	0
25	SLU 68	-920	3	2907	-1.64	-27.28	0
25	SLU 69	-932	3	3197	-2	-27.75	0
25	SLU 70	-930	3	3042	-1.8	-27.6	0
25	SLU 71	-929	3	3196	-1.99	-27.63	0
25	SLU 72	-926	3	3041	-1.8	-27.49	0
25	SLU 73	-1005	3	3055	-1.76	-29.94	0
25	SLU 74	-1018	3	3344	-2.12	-30.41	0
25	SLU 75	-1016	3	3189	-1.92	-30.26	0
25	SLU 76	-1011	3	3085	-1.78	-30.05	0
25	SLU 77	-1023	3	3374	-2.14	-30.52	0
25	SLU 78	-1021	3	3219	-1.94	-30.38	0
25	SLU 79	-1020	3	3373	-2.13	-30.41	0
25	SLU 80	-1018	3	3218	-1.94	-30.27	0
25	SLU 81	-1048	3	3389	-2.16	-31.37	0
25	SLU 82	-1046	3	3234	-1.96	-31.22	0
25	SLU 83	-1054	3	3419	-2.18	-31.48	0
25	SLU 84	-1051	3	3264	-1.98	-31.34	0
25	SLE RA 1	-692	2	2380	-1.48	-20.68	0
25	SLE RA 2	-690	2	2208	-1.26	-20.52	0
25	SLE RA 3	-698	2	2401	-1.49	-20.83	0
25	SLE RA 4	-697	2	2298	-1.36	-20.73	0
25	SLE RA 5	-693	2	2228	-1.27	-20.59	0
25	SLE RA 6	-702	2	2421	-1.51	-20.91	0
25	SLE RA 7	-700	2	2318	-1.38	-20.81	0
25	SLE RA 8	-699	2	2420	-1.51	-20.83	0
25	SLE RA 9	-698	2	2317	-1.37	-20.73	0
25	SLE RA 10	-751	2	2326	-1.35	-22.37	0
25	SLE RA 11	-759	2	2519	-1.59	-22.68	0
25	SLE RA 12	-757	2	2416	-1.46	-22.58	0

Nodo	Cont.	Reazione a traslazione			Reazione a rotazione		
Ind.	N.br.	x	y	z	x	y	z
25	SLE RA 13	-754	2	2346	-1.37	-22.44	0
25	SLE RA 14	-763	2	2539	-1.6	-22.76	0
25	SLE RA 15	-761	2	2436	-1.47	-22.66	0
25	SLE RA 16	-760	2	2538	-1.6	-22.68	0
25	SLE RA 17	-759	2	2435	-1.47	-22.59	0
25	SLE RA 18	-779	2	2549	-1.61	-23.32	0
25	SLE RA 19	-778	2	2446	-1.48	-23.22	0
25	SLE RA 20	-783	2	2569	-1.63	-23.4	0
25	SLE RA 21	-781	2	2466	-1.49	-23.3	0
25	SLE FR 1	-692	2	2380	-1.48	-20.68	0
25	SLE FR 2	-692	2	2345	-1.44	-20.64	0
25	SLE FR 3	-694	2	2388	-1.49	-20.71	0
25	SLE FR 4	-718	2	2396	-1.48	-21.44	0
25	SLE FR 5	-720	2	2439	-1.53	-21.5	0
25	SLE FR 6	-736	2	2464	-1.55	-22	0
25	SLE QP 1	-692	2	2380	-1.48	-20.68	0
25	SLE QP 2	-718	2	2431	-1.52	-21.47	0
25	SLD 1	-408	2	1991	-1.36	-10.36	0
25	SLD 2	-408	2	1991	-1.36	-10.36	0
25	SLD 3	-247	0	1462	1.94	-5.25	0.01
25	SLD 4	-247	0	1462	1.94	-5.25	0.01
25	SLD 5	-870	5	3101	-6.47	-25.88	0
25	SLD 6	-870	5	3101	-6.47	-25.88	0
25	SLD 7	-332	-2	1337	4.52	-8.85	0.01
25	SLD 8	-332	-2	1337	4.52	-8.85	0.01
25	SLD 9	-1104	6	3524	-7.56	-34.08	-0.01
25	SLD 10	-1104	6	3524	-7.56	-34.08	-0.01
25	SLD 11	-567	-1	1760	3.43	-17.05	0.01
25	SLD 12	-567	-1	1760	3.43	-17.05	0.01
25	SLD 13	-1189	5	3400	-4.98	-37.69	0
25	SLD 14	-1189	5	3400	-4.98	-37.69	0
25	SLD 15	-1028	2	2870	-1.68	-32.58	0
25	SLD 16	-1028	2	2870	-1.68	-32.58	0
25	SLV 1	7	1	1425	-1.13	4.51	0
25	SLV 2	7	1	1425	-1.13	4.51	0
25	SLV 3	385	-3	138	6.58	16.5	0.01
25	SLV 4	385	-3	138	6.58	16.5	0.01
25	SLV 5	-1074	9	4081	-13.1	-31.85	-0.01
25	SLV 6	-1074	9	4081	-13.1	-31.85	-0.01
25	SLV 7	186	-7	-209	12.6	8.1	0.02
25	SLV 8	186	-7	-209	12.6	8.1	0.02
25	SLV 9	-1623	11	5071	-15.64	-51.04	-0.02
25	SLV 10	-1623	11	5071	-15.64	-51.04	-0.02
25	SLV 11	-362	-5	780	10.06	-11.08	0.01
25	SLV 12	-362	-5	780	10.06	-11.08	0.01
25	SLV 13	-1821	8	4724	-9.62	-59.43	-0.01
25	SLV 14	-1821	8	4724	-9.62	-59.43	-0.01
25	SLV 15	-1443	3	3437	-1.91	-47.45	0
25	SLV 16	-1443	3	3437	-1.91	-47.45	0
26	SLU 1	-778	4	2339	-1.31	-32.65	0.02
26	SLU 2	-772	3	2011	-0.9	-31.89	0.02
26	SLU 3	-789	4	2372	-1.33	-33.18	0.02
26	SLU 4	-786	4	2175	-1.08	-32.72	0.02
26	SLU 5	-781	3	2044	-0.91	-32.32	0.02
26	SLU 6	-798	4	2405	-1.34	-33.6	0.02
26	SLU 7	-795	4	2209	-1.1	-33.15	0.02
26	SLU 8	-795	4	2405	-1.34	-33.5	0.02
26	SLU 9	-792	4	2208	-1.09	-33.05	0.02
26	SLU 10	-868	4	2174	-1	-35.74	0.02
26	SLU 11	-884	5	2535	-1.44	-37.03	0.02
26	SLU 12	-881	4	2338	-1.19	-36.57	0.02
26	SLU 13	-876	4	2207	-1.02	-36.17	0.02
26	SLU 14	-893	5	2568	-1.45	-37.46	0.02
26	SLU 15	-890	4	2371	-1.2	-37	0.02
26	SLU 16	-890	5	2568	-1.45	-37.36	0.02
26	SLU 17	-887	4	2371	-1.2	-36.9	0.02
26	SLU 18	-914	5	2571	-1.47	-38.16	0.02
26	SLU 19	-910	4	2375	-1.22	-37.7	0.02
26	SLU 20	-922	5	2604	-1.48	-38.58	0.02
26	SLU 21	-919	4	2408	-1.23	-38.12	0.02
26	SLU 22	-847	4	2476	-1.4	-35.56	0.02
26	SLU 23	-842	4	2149	-0.99	-34.8	0.02
26	SLU 24	-859	4	2509	-1.42	-36.09	0.02
26	SLU 25	-855	4	2313	-1.17	-35.63	0.02
26	SLU 26	-851	4	2182	-1	-35.22	0.02
26	SLU 27	-867	5	2543	-1.43	-36.51	0.02
26	SLU 28	-864	4	2346	-1.18	-36.05	0.02
26	SLU 29	-865	4	2542	-1.43	-36.41	0.02
26	SLU 30	-861	4	2346	-1.18	-35.95	0.02
26	SLU 31	-937	4	2311	-1.09	-38.65	0.02
26	SLU 32	-954	5	2672	-1.53	-39.94	0.02
26	SLU 33	-951	4	2476	-1.28	-39.48	0.02
26	SLU 34	-946	4	2344	-1.11	-39.07	0.02
26	SLU 35	-963	5	2705	-1.54	-40.36	0.02
26	SLU 36	-959	4	2509	-1.29	-39.9	0.02
26	SLU 37	-960	5	2705	-1.54	-40.26	0.02
26	SLU 38	-957	4	2509	-1.29	-39.8	0.02
26	SLU 39	-983	5	2709	-1.55	-41.06	0.02
26	SLU 40	-980	4	2512	-1.31	-40.61	0.02
26	SLU 41	-992	5	2742	-1.57	-41.49	0.03

Nodo	Cont.	Reazione a traslazione			Reazione a rotazione		
Ind.	N.br.	x	y	z	x	y	z
26	SLU 42	-989	5	2545	-1.32	-41.03	0.02
26	SLU 43	-987	5	2993	-1.68	-41.45	0.03
26	SLU 44	-982	4	2666	-1.26	-40.69	0.02
26	SLU 45	-999	5	3026	-1.69	-41.98	0.03
26	SLU 46	-996	5	2830	-1.44	-41.52	0.02
26	SLU 47	-991	4	2699	-1.28	-41.12	0.02
26	SLU 48	-1007	5	3060	-1.71	-42.4	0.03
26	SLU 49	-1004	5	2863	-1.46	-41.95	0.02
26	SLU 50	-1005	5	3059	-1.71	-42.3	0.03
26	SLU 51	-1001	5	2863	-1.46	-41.85	0.02
26	SLU 52	-1077	5	2828	-1.37	-44.54	0.02
26	SLU 53	-1094	6	3189	-1.8	-45.83	0.03
26	SLU 54	-1091	5	2993	-1.55	-45.37	0.03
26	SLU 55	-1086	5	2861	-1.38	-44.97	0.02
26	SLU 56	-1103	6	3222	-1.82	-46.25	0.03
26	SLU 57	-1099	5	3026	-1.57	-45.8	0.03
26	SLU 58	-1100	6	3222	-1.81	-46.16	0.03
26	SLU 59	-1097	5	3026	-1.56	-45.7	0.03
26	SLU 60	-1123	6	3226	-1.83	-46.96	0.03
26	SLU 61	-1120	5	3029	-1.58	-46.5	0.03
26	SLU 62	-1132	6	3259	-1.84	-47.38	0.03
26	SLU 63	-1129	5	3062	-1.6	-46.92	0.03
26	SLU 64	-1057	6	3131	-1.76	-44.36	0.03
26	SLU 65	-1051	5	2803	-1.35	-43.6	0.02
26	SLU 66	-1068	6	3164	-1.78	-44.89	0.03
26	SLU 67	-1065	5	2967	-1.53	-44.43	0.03
26	SLU 68	-1060	5	2836	-1.36	-44.02	0.02
26	SLU 69	-1077	6	3197	-1.8	-45.31	0.03
26	SLU 70	-1074	5	3001	-1.55	-44.85	0.03
26	SLU 71	-1074	6	3197	-1.79	-45.21	0.03
26	SLU 72	-1071	5	3000	-1.55	-44.75	0.03
26	SLU 73	-1147	5	2966	-1.46	-47.45	0.03
26	SLU 74	-1163	6	3327	-1.89	-48.74	0.03
26	SLU 75	-1160	5	3130	-1.64	-48.28	0.03
26	SLU 76	-1155	5	2999	-1.47	-47.87	0.03
26	SLU 77	-1172	6	3360	-1.9	-49.16	0.03
26	SLU 78	-1169	6	3163	-1.66	-48.7	0.03
26	SLU 79	-1169	6	3360	-1.9	-49.06	0.03
26	SLU 80	-1166	6	3163	-1.65	-48.6	0.03
26	SLU 81	-1193	6	3363	-1.92	-49.86	0.03
26	SLU 82	-1189	6	3167	-1.67	-49.41	0.03
26	SLU 83	-1201	6	3396	-1.93	-50.29	0.03
26	SLU 84	-1198	6	3200	-1.68	-49.83	0.03
26	SLE RA 1	-798	4	2378	-1.34	-33.49	0.02
26	SLE RA 2	-794	4	2160	-1.06	-32.98	0.02
26	SLE RA 3	-805	4	2400	-1.35	-33.83	0.02
26	SLE RA 4	-803	4	2269	-1.18	-33.53	0.02
26	SLE RA 5	-800	4	2182	-1.07	-33.26	0.02
26	SLE RA 6	-811	4	2422	-1.36	-34.12	0.02
26	SLE RA 7	-809	4	2291	-1.19	-33.81	0.02
26	SLE RA 8	-809	4	2422	-1.36	-34.05	0.02
26	SLE RA 9	-807	4	2291	-1.19	-33.75	0.02
26	SLE RA 10	-857	4	2268	-1.13	-35.54	0.02
26	SLE RA 11	-869	4	2509	-1.42	-36.4	0.02
26	SLE RA 12	-867	4	2378	-1.26	-36.1	0.02
26	SLE RA 13	-863	4	2290	-1.14	-35.83	0.02
26	SLE RA 14	-874	5	2531	-1.43	-36.69	0.02
26	SLE RA 15	-872	4	2400	-1.26	-36.38	0.02
26	SLE RA 16	-873	5	2531	-1.43	-36.62	0.02
26	SLE RA 17	-870	4	2400	-1.26	-36.31	0.02
26	SLE RA 18	-888	5	2533	-1.44	-37.15	0.02
26	SLE RA 19	-886	4	2402	-1.27	-36.85	0.02
26	SLE RA 20	-894	5	2555	-1.45	-37.44	0.02
26	SLE RA 21	-892	4	2424	-1.28	-37.13	0.02
26	SLE FR 1	-798	4	2378	-1.34	-33.49	0.02
26	SLE FR 2	-797	4	2334	-1.28	-33.38	0.02
26	SLE FR 3	-800	4	2387	-1.34	-33.6	0.02
26	SLE FR 4	-824	4	2381	-1.31	-34.48	0.02
26	SLE FR 5	-827	4	2433	-1.37	-34.7	0.02
26	SLE FR 6	-843	4	2455	-1.39	-35.32	0.02
26	SLE QP 1	-798	4	2378	-1.34	-33.49	0.02
26	SLE QP 2	-825	4	2425	-1.37	-34.59	0.02
26	SLD 1	-497	4	1892	-1.35	-20.78	0.02
26	SLD 2	-497	4	1892	-1.35	-20.78	0.02
26	SLD 3	-334	3	1208	0.56	-14.86	0.01
26	SLD 4	-334	3	1208	0.56	-14.86	0.01
26	SLD 5	-973	7	3302	-4.26	-39.44	0.03
26	SLD 6	-973	7	3302	-4.26	-39.44	0.03
26	SLD 7	-431	1	1022	2.11	-19.68	0.01
26	SLD 8	-431	1	1022	2.11	-19.68	0.01
26	SLD 9	-1218	7	3827	-4.84	-49.49	0.04
26	SLD 10	-1218	7	3827	-4.84	-49.49	0.04
26	SLD 11	-677	2	1547	1.52	-29.74	0.01
26	SLD 12	-677	2	1547	1.52	-29.74	0.01
26	SLD 13	-1316	6	3642	-3.3	-54.32	0.03
26	SLD 14	-1316	6	3642	-3.3	-54.32	0.03
26	SLD 15	-1153	4	2957	-1.39	-48.39	0.03
26	SLD 16	-1153	4	2957	-1.39	-48.39	0.03
26	SLV 1	-57	4	1206	-1.33	-2.3	0.01
26	SLV 2	-57	4	1206	-1.33	-2.3	0.01

Nodo	Cont.	Reazione a traslazione			Reazione a rotazione		
Ind.	N.br.	x	y	z	x	y	z
26	SLV 3	324	0	-455	3.15	11.59	-0.01
26	SLV 4	324	0	-455	3.15	11.59	-0.01
26	SLV 5	-1172	10	4578	-8.15	-45.97	0.05
26	SLV 6	-1172	10	4578	-8.15	-45.97	0.05
26	SLV 7	97	-3	-958	6.78	0.33	-0.02
26	SLV 8	97	-3	-958	6.78	0.33	-0.02
26	SLV 9	-1747	11	5807	-9.52	-69.5	0.06
26	SLV 10	-1747	11	5807	-9.52	-69.5	0.06
26	SLV 11	-478	-2	271	5.41	-23.2	-0.01
26	SLV 12	-478	-2	271	5.41	-23.2	-0.01
26	SLV 13	-1974	8	5304	-5.89	-80.76	0.05
26	SLV 14	-1974	8	5304	-5.89	-80.76	0.05
26	SLV 15	-1593	4	3643	-1.41	-66.87	0.03
26	SLV 16	-1593	4	3643	-1.41	-66.87	0.03
27	SLU 1	-563	414	2980	-16.91	-14.54	0.17
27	SLU 2	-525	333	2544	-14.32	-13.86	0.19
27	SLU 3	-571	421	3024	-17.23	-14.72	0.17
27	SLU 4	-548	372	2762	-15.68	-14.31	0.18
27	SLU 5	-532	337	2585	-14.51	-14	0.19
27	SLU 6	-578	425	3065	-17.43	-14.86	0.17
27	SLU 7	-555	376	2803	-15.87	-14.45	0.19
27	SLU 8	-576	423	3062	-17.3	-14.82	0.17
27	SLU 9	-554	374	2800	-15.74	-14.41	0.19
27	SLU 10	-581	373	2772	-16.28	-15.47	0.21
27	SLU 11	-627	461	3252	-19.2	-16.33	0.19
27	SLU 12	-605	412	2990	-17.64	-15.93	0.21
27	SLU 13	-588	377	2813	-16.47	-15.61	0.22
27	SLU 14	-634	465	3293	-19.39	-16.47	0.19
27	SLU 15	-611	416	3031	-17.83	-16.07	0.21
27	SLU 16	-633	463	3290	-19.26	-16.43	0.19
27	SLU 17	-610	414	3028	-17.7	-16.02	0.21
27	SLU 18	-644	471	3306	-19.71	-16.84	0.2
27	SLU 19	-621	422	3044	-18.16	-16.43	0.21
27	SLU 20	-650	476	3347	-19.91	-16.98	0.2
27	SLU 21	-628	427	3085	-18.35	-16.57	0.22
27	SLU 22	-605	450	3173	-18.67	-15.68	0.18
27	SLU 23	-567	369	2736	-16.08	-15	0.21
27	SLU 24	-613	456	3216	-19	-15.87	0.19
27	SLU 25	-591	407	2954	-17.44	-15.46	0.2
27	SLU 26	-574	373	2777	-16.27	-15.14	0.21
27	SLU 27	-620	461	3257	-19.19	-16.01	0.19
27	SLU 28	-597	412	2995	-17.63	-15.6	0.2
27	SLU 29	-619	459	3254	-19.06	-15.96	0.19
27	SLU 30	-596	410	2993	-17.5	-15.55	0.2
27	SLU 31	-624	408	2964	-18.04	-16.61	0.23
27	SLU 32	-670	496	3444	-20.96	-17.48	0.21
27	SLU 33	-647	447	3182	-19.4	-17.07	0.22
27	SLU 34	-631	413	3005	-18.24	-16.75	0.23
27	SLU 35	-677	500	3485	-21.15	-17.62	0.21
27	SLU 36	-654	452	3223	-19.6	-17.21	0.23
27	SLU 37	-675	498	3483	-21.02	-17.57	0.21
27	SLU 38	-653	450	3221	-19.47	-17.16	0.23
27	SLU 39	-686	507	3499	-21.48	-17.98	0.22
27	SLU 40	-663	458	3237	-19.92	-17.57	0.23
27	SLU 41	-693	511	3539	-21.67	-18.12	0.22
27	SLU 42	-670	462	3278	-20.12	-17.71	0.23
27	SLU 43	-717	527	3809	-21.38	-18.51	0.21
27	SLU 44	-679	445	3372	-18.79	-17.83	0.24
27	SLU 45	-725	533	3852	-21.7	-18.69	0.21
27	SLU 46	-702	484	3590	-20.15	-18.28	0.23
27	SLU 47	-686	450	3413	-18.98	-17.97	0.24
27	SLU 48	-732	537	3893	-21.89	-18.83	0.21
27	SLU 49	-709	489	3631	-20.34	-18.42	0.23
27	SLU 50	-731	535	3890	-21.77	-18.79	0.21
27	SLU 51	-708	487	3629	-20.21	-18.38	0.23
27	SLU 52	-736	485	3600	-20.75	-19.44	0.26
27	SLU 53	-782	573	4080	-23.66	-20.3	0.23
27	SLU 54	-759	524	3818	-22.11	-19.9	0.25
27	SLU 55	-743	489	3641	-20.94	-19.58	0.26
27	SLU 56	-788	577	4121	-23.86	-20.44	0.24
27	SLU 57	-766	528	3859	-22.3	-20.03	0.25
27	SLU 58	-787	575	4118	-23.73	-20.4	0.24
27	SLU 59	-764	526	3857	-22.17	-19.99	0.25
27	SLU 60	-798	584	4134	-24.18	-20.81	0.24
27	SLU 61	-775	535	3873	-22.63	-20.4	0.26
27	SLU 62	-805	588	4175	-24.38	-20.95	0.24
27	SLU 63	-782	539	3913	-22.82	-20.54	0.26
27	SLU 64	-760	562	4001	-23.14	-19.65	0.23
27	SLU 65	-722	481	3565	-20.55	-18.97	0.25
27	SLU 66	-768	568	4044	-23.46	-19.84	0.23
27	SLU 67	-745	520	3783	-21.91	-19.43	0.25
27	SLU 68	-728	485	3605	-20.74	-19.11	0.25
27	SLU 69	-774	573	4085	-23.66	-19.98	0.23
27	SLU 70	-752	524	3823	-22.1	-19.57	0.25
27	SLU 71	-773	571	4083	-23.53	-19.93	0.23
27	SLU 72	-750	522	3821	-21.97	-19.52	0.25
27	SLU 73	-778	521	3793	-22.51	-20.58	0.28
27	SLU 74	-824	608	4272	-25.43	-21.45	0.25
27	SLU 75	-801	559	4011	-23.87	-21.04	0.27
27	SLU 76	-785	525	3834	-22.71	-20.72	0.28

Nodo	Cont.	Reazione a traslazione			Reazione a rotazione		
Ind.	N.br.	x	y	z	x	y	z
27	SLU 77	-831	613	4313	-25.62	-21.59	0.25
27	SLU 78	-808	564	4051	-24.07	-21.18	0.27
27	SLU 79	-830	611	4311	-25.49	-21.54	0.25
27	SLU 80	-807	562	4049	-23.94	-21.13	0.27
27	SLU 81	-841	619	4327	-25.95	-21.95	0.26
27	SLU 82	-818	570	4065	-24.39	-21.54	0.27
27	SLU 83	-847	623	4368	-26.14	-22.09	0.26
27	SLU 84	-824	575	4106	-24.58	-21.68	0.28
27	SLE RA 1	-575	425	3035	-17.41	-14.86	0.17
27	SLE RA 2	-550	370	2745	-15.69	-14.41	0.19
27	SLE RA 3	-580	429	3064	-17.63	-14.99	0.17
27	SLE RA 4	-565	396	2890	-16.59	-14.72	0.18
27	SLE RA 5	-554	373	2772	-15.81	-14.5	0.19
27	SLE RA 6	-585	432	3092	-17.76	-15.08	0.17
27	SLE RA 7	-570	399	2917	-16.72	-14.81	0.18
27	SLE RA 8	-584	430	3090	-17.67	-15.05	0.17
27	SLE RA 9	-569	398	2915	-16.64	-14.78	0.18
27	SLE RA 10	-587	397	2897	-16.99	-15.48	0.2
27	SLE RA 11	-618	455	3216	-18.94	-16.06	0.19
27	SLE RA 12	-603	423	3042	-17.9	-15.79	0.2
27	SLE RA 13	-592	400	2924	-17.12	-15.58	0.2
27	SLE RA 14	-623	458	3244	-19.07	-16.16	0.19
27	SLE RA 15	-607	426	3069	-18.03	-15.88	0.2
27	SLE RA 16	-622	457	3242	-18.98	-16.13	0.19
27	SLE RA 17	-607	424	3067	-17.94	-15.85	0.2
27	SLE RA 18	-629	462	3253	-19.28	-16.4	0.19
27	SLE RA 19	-614	430	3078	-18.25	-16.13	0.2
27	SLE RA 20	-633	465	3280	-19.41	-16.49	0.19
27	SLE RA 21	-618	433	3105	-18.38	-16.22	0.2
27	SLE FR 1	-575	425	3035	-17.41	-14.86	0.17
27	SLE FR 2	-570	414	2977	-17.07	-14.77	0.17
27	SLE FR 3	-577	426	3046	-17.47	-14.9	0.17
27	SLE FR 4	-586	425	3042	-17.63	-15.23	0.18
27	SLE FR 5	-593	437	3111	-18.03	-15.36	0.18
27	SLE FR 6	-602	444	3144	-18.35	-15.63	0.18
27	SLE QP 1	-575	425	3035	-17.41	-14.86	0.17
27	SLE QP 2	-591	436	3101	-17.97	-15.33	0.18
27	SLD 1	-350	472	2389	-19.64	-7.86	0.12
27	SLD 2	-350	472	2389	-19.64	-7.86	0.12
27	SLD 3	-248	252	1422	-11.92	-5.09	0.03
27	SLD 4	-248	252	1422	-11.92	-5.09	0.03
27	SLD 5	-674	781	4355	-30.18	-17.29	0.3
27	SLD 6	-674	781	4355	-30.18	-17.29	0.3
27	SLD 7	-334	47	1129	-4.45	-8.05	-0.01
27	SLD 8	-334	47	1129	-4.45	-8.05	-0.01
27	SLD 9	-849	825	5072	-31.5	-22.6	0.36
27	SLD 10	-849	825	5072	-31.5	-22.6	0.36
27	SLD 11	-509	91	1847	-5.77	-13.36	0.05
27	SLD 12	-509	91	1847	-5.77	-13.36	0.05
27	SLD 13	-935	620	4779	-24.03	-25.56	0.33
27	SLD 14	-935	620	4779	-24.03	-25.56	0.33
27	SLD 15	-833	400	3812	-16.31	-22.79	0.23
27	SLD 16	-833	400	3812	-16.31	-22.79	0.23
27	SLV 1	-29	524	1471	-21.95	2.11	0.04
27	SLV 2	-29	524	1471	-21.95	2.11	0.04
27	SLV 3	214	-4	-866	-3.49	8.63	-0.18
27	SLV 4	214	-4	-866	-3.49	8.63	-0.18
27	SLV 5	-790	1263	6157	-47.17	-19.97	0.47
27	SLV 6	-790	1263	6157	-47.17	-19.97	0.47
27	SLV 7	18	-497	-1635	14.37	1.74	-0.26
27	SLV 8	18	-497	-1635	14.37	1.74	-0.26
27	SLV 9	-1200	1369	7836	-50.32	-32.39	0.62
27	SLV 10	-1200	1369	7836	-50.32	-32.39	0.62
27	SLV 11	-393	-391	44	11.22	-10.68	-0.12
27	SLV 12	-393	-391	44	11.22	-10.68	-0.12
27	SLV 13	-1396	876	7068	-32.46	-39.28	0.53
27	SLV 14	-1396	876	7068	-32.46	-39.28	0.53
27	SLV 15	-1154	348	4730	-14	-32.76	0.31
27	SLV 16	-1154	348	4730	-14	-32.76	0.31
28	SLU 1	3	15	2556	17.02	1.38	0.05
28	SLU 2	2	-86	2397	23.29	1.34	0.05
28	SLU 3	3	14	2586	17.54	1.4	0.05
28	SLU 4	2	-47	2491	21.3	1.37	0.05
28	SLU 5	2	-88	2421	23.63	1.34	0.05
28	SLU 6	3	12	2610	17.89	1.4	0.05
28	SLU 7	2	-49	2515	21.65	1.37	0.05
28	SLU 8	3	12	2603	17.71	1.4	0.05
28	SLU 9	2	-49	2508	21.47	1.37	0.05
28	SLU 10	2	-82	2651	25.85	1.48	0.05
28	SLU 11	3	18	2839	20.1	1.54	0.06
28	SLU 12	3	-43	2744	23.86	1.51	0.05
28	SLU 13	2	-84	2674	26.19	1.48	0.05
28	SLU 14	3	16	2863	20.44	1.54	0.06
28	SLU 15	3	-45	2768	24.2	1.51	0.06
28	SLU 16	3	16	2856	20.27	1.54	0.06
28	SLU 17	3	-45	2761	24.03	1.51	0.05
28	SLU 18	3	21	2917	20.68	1.58	0.06
28	SLU 19	3	-40	2822	24.44	1.55	0.06
28	SLU 20	3	19	2941	21.02	1.59	0.06
28	SLU 21	3	-42	2846	24.78	1.56	0.06

Nodo	Cont.	Reazione a traslazione			Reazione a rotazione		
Ind.	N.br.	x	y	z	x	y	z
28	SLU 22	3	18	2764	19.42	1.48	0.05
28	SLU 23	2	-84	2606	25.68	1.43	0.05
28	SLU 24	3	16	2794	19.94	1.49	0.05
28	SLU 25	3	-45	2700	23.7	1.46	0.05
28	SLU 26	2	-85	2630	26.02	1.44	0.05
28	SLU 27	3	14	2818	20.28	1.5	0.05
28	SLU 28	3	-47	2723	24.04	1.47	0.05
28	SLU 29	3	14	2812	20.1	1.49	0.05
28	SLU 30	3	-47	2717	23.86	1.46	0.05
28	SLU 31	3	-80	2859	28.24	1.57	0.06
28	SLU 32	3	20	3048	22.49	1.63	0.06
28	SLU 33	3	-41	2953	26.25	1.6	0.06
28	SLU 34	3	-82	2883	28.58	1.58	0.06
28	SLU 35	3	18	3071	22.84	1.64	0.06
28	SLU 36	3	-43	2976	26.6	1.61	0.06
28	SLU 37	3	18	3065	22.66	1.63	0.06
28	SLU 38	3	-43	2970	26.42	1.6	0.06
28	SLU 39	3	23	3125	23.07	1.68	0.06
28	SLU 40	3	-38	3031	26.83	1.65	0.06
28	SLU 41	3	21	3149	23.41	1.68	0.06
28	SLU 42	3	-39	3054	27.17	1.66	0.06
28	SLU 43	3	19	3251	21.31	1.77	0.06
28	SLU 44	3	-82	3093	27.58	1.72	0.06
28	SLU 45	3	18	3281	21.83	1.78	0.06
28	SLU 46	3	-43	3187	25.59	1.75	0.06
28	SLU 47	3	-84	3117	27.92	1.72	0.06
28	SLU 48	3	16	3305	22.17	1.78	0.06
28	SLU 49	3	-45	3210	25.93	1.76	0.06
28	SLU 50	3	16	3299	22	1.78	0.06
28	SLU 51	3	-45	3204	25.76	1.75	0.06
28	SLU 52	3	-78	3346	30.14	1.86	0.07
28	SLU 53	4	22	3535	24.39	1.92	0.07
28	SLU 54	3	-39	3440	28.15	1.89	0.07
28	SLU 55	3	-80	3370	30.48	1.86	0.07
28	SLU 56	4	20	3558	24.73	1.92	0.07
28	SLU 57	3	-41	3463	28.49	1.9	0.07
28	SLU 58	4	20	3552	24.56	1.92	0.07
28	SLU 59	3	-41	3457	28.31	1.89	0.07
28	SLU 60	4	25	3612	24.97	1.96	0.07
28	SLU 61	3	-36	3518	28.73	1.94	0.07
28	SLU 62	4	23	3636	25.31	1.97	0.07
28	SLU 63	3	-38	3541	29.07	1.94	0.07
28	SLU 64	3	22	3459	23.7	1.86	0.07
28	SLU 65	3	-80	3301	29.97	1.81	0.07
28	SLU 66	3	20	3490	24.22	1.87	0.07
28	SLU 67	3	-41	3395	27.98	1.85	0.07
28	SLU 68	3	-82	3325	30.31	1.82	0.07
28	SLU 69	3	18	3514	24.57	1.88	0.07
28	SLU 70	3	-43	3419	28.33	1.85	0.07
28	SLU 71	3	18	3507	24.39	1.87	0.07
28	SLU 72	3	-43	3412	28.15	1.85	0.07
28	SLU 73	3	-76	3554	32.53	1.95	0.07
28	SLU 74	4	24	3743	26.78	2.01	0.07
28	SLU 75	3	-37	3648	30.54	1.99	0.07
28	SLU 76	3	-78	3578	32.87	1.96	0.07
28	SLU 77	4	22	3767	27.12	2.02	0.07
28	SLU 78	3	-39	3672	30.88	1.99	0.07
28	SLU 79	4	22	3760	26.95	2.01	0.07
28	SLU 80	3	-39	3665	30.71	1.98	0.07
28	SLU 81	4	27	3821	27.36	2.06	0.08
28	SLU 82	4	-34	3726	31.12	2.03	0.07
28	SLU 83	4	25	3845	27.7	2.07	0.08
28	SLU 84	4	-36	3750	31.46	2.04	0.08
28	SLE RA 1	3	16	2615	17.71	1.41	0.05
28	SLE RA 2	2	-51	2510	21.89	1.38	0.05
28	SLE RA 3	3	15	2636	18.05	1.42	0.05
28	SLE RA 4	3	-26	2572	20.56	1.4	0.05
28	SLE RA 5	2	-53	2526	22.11	1.38	0.05
28	SLE RA 6	3	14	2651	18.28	1.42	0.05
28	SLE RA 7	3	-27	2588	20.79	1.4	0.05
28	SLE RA 8	3	14	2647	18.17	1.42	0.05
28	SLE RA 9	3	-27	2584	20.67	1.4	0.05
28	SLE RA 10	3	-49	2678	23.59	1.47	0.05
28	SLE RA 11	3	18	2804	19.76	1.51	0.05
28	SLE RA 12	3	-23	2741	22.27	1.49	0.05
28	SLE RA 13	3	-50	2694	23.82	1.48	0.05
28	SLE RA 14	3	16	2820	19.99	1.52	0.05
28	SLE RA 15	3	-24	2757	22.49	1.5	0.05
28	SLE RA 16	3	16	2816	19.87	1.51	0.05
28	SLE RA 17	3	-24	2752	22.38	1.49	0.05
28	SLE RA 18	3	20	2856	20.14	1.54	0.06
28	SLE RA 19	3	-21	2793	22.65	1.52	0.06
28	SLE RA 20	3	19	2872	20.37	1.55	0.06
28	SLE RA 21	3	-22	2809	22.88	1.53	0.06
28	SLE FR 1	3	16	2615	17.71	1.41	0.05
28	SLE FR 2	3	3	2594	18.54	1.4	0.05
28	SLE FR 3	3	16	2622	17.8	1.41	0.05
28	SLE FR 4	3	4	2666	19.27	1.44	0.05
28	SLE FR 5	3	17	2694	18.53	1.45	0.05
28	SLE FR 6	3	18	2736	18.93	1.48	0.05

Nodo	Cont.	Reazione a traslazione			Reazione a rotazione		
Ind.	N.br.	x	y	z	x	y	z
28	SLE QP 1	3	16	2615	17.71	1.41	0.05
28	SLE QP 2	3	17	2687	18.44	1.45	0.05
28	SLD 1	7	48	3569	16.85	2.86	0.06
28	SLD 2	7	48	3569	16.85	2.86	0.06
28	SLD 3	5	-296	3089	32.55	2.31	0.05
28	SLD 4	5	-296	3089	32.55	2.31	0.05
28	SLD 5	7	549	3680	-5.86	2.72	0.06
28	SLD 6	7	549	3680	-5.86	2.72	0.06
28	SLD 7	0	-599	2080	46.49	0.86	0.04
28	SLD 8	0	-599	2080	46.49	0.86	0.04
28	SLD 9	5	633	3295	-9.61	2.04	0.06
28	SLD 10	5	633	3295	-9.61	2.04	0.06
28	SLD 11	-2	-514	1695	42.74	0.18	0.04
28	SLD 12	-2	-514	1695	42.74	0.18	0.04
28	SLD 13	1	331	2286	4.32	0.6	0.05
28	SLD 14	1	331	2286	4.32	0.6	0.05
28	SLD 15	-1	-14	1806	20.03	0.04	0.04
28	SLD 16	-1	-14	1806	20.03	0.04	0.04
28	SLV 1	12	86	4768	15.03	4.78	0.07
28	SLV 2	12	86	4768	15.03	4.78	0.07
28	SLV 3	7	-733	3619	52.88	3.43	0.06
28	SLV 4	7	-733	3619	52.88	3.43	0.06
28	SLV 5	13	1280	5054	-39.98	4.5	0.08
28	SLV 6	13	1280	5054	-39.98	4.5	0.08
28	SLV 7	-4	-1450	1225	86.17	-0.01	0.03
28	SLV 8	-4	-1450	1225	86.17	-0.01	0.03
28	SLV 9	9	1485	4150	-49.29	2.91	0.07
28	SLV 10	9	1485	4150	-49.29	2.91	0.07
28	SLV 11	-8	-1246	321	76.86	-1.6	0.03
28	SLV 12	-8	-1246	321	76.86	-1.6	0.03
28	SLV 13	-2	767	1756	-16	-0.53	0.05
28	SLV 14	-2	767	1756	-16	-0.53	0.05
28	SLV 15	-7	-52	607	21.85	-1.88	0.03
28	SLV 16	-7	-52	607	21.85	-1.88	0.03
29	SLU 1	0	1146	4285	-48.52	-1.4	0.28
29	SLU 2	0	1071	4108	-44	-1.46	0.29
29	SLU 3	0	1171	4350	-49.45	-1.45	0.29
29	SLU 4	0	1126	4244	-46.74	-1.48	0.29
29	SLU 5	0	1086	4151	-44.57	-1.49	0.29
29	SLU 6	0	1187	4393	-50.02	-1.48	0.29
29	SLU 7	0	1141	4287	-47.31	-1.51	0.3
29	SLU 8	0	1177	4371	-49.66	-1.46	0.29
29	SLU 9	0	1132	4264	-46.95	-1.5	0.3
29	SLU 10	0	1256	4650	-51.34	-1.72	0.34
29	SLU 11	0	1356	4892	-56.79	-1.71	0.34
29	SLU 12	0	1311	4786	-54.08	-1.74	0.35
29	SLU 13	0	1271	4693	-51.91	-1.75	0.35
29	SLU 14	0	1372	4935	-57.36	-1.74	0.35
29	SLU 15	0	1326	4828	-54.65	-1.77	0.35
29	SLU 16	0	1362	4913	-57	-1.72	0.34
29	SLU 17	0	1317	4806	-54.29	-1.76	0.35
29	SLU 18	0	1411	5059	-59	-1.78	0.36
29	SLU 19	0	1365	4953	-56.29	-1.81	0.36
29	SLU 20	0	1426	5102	-59.57	-1.81	0.36
29	SLU 21	0	1381	4996	-56.86	-1.84	0.37
29	SLU 22	0	1287	4687	-53.96	-1.63	0.32
29	SLU 23	0	1212	4510	-49.44	-1.68	0.33
29	SLU 24	0	1312	4752	-54.89	-1.67	0.33
29	SLU 25	0	1267	4645	-52.18	-1.7	0.33
29	SLU 26	0	1227	4552	-50.01	-1.71	0.33
29	SLU 27	0	1328	4795	-55.46	-1.7	0.33
29	SLU 28	0	1282	4688	-52.75	-1.73	0.34
29	SLU 29	0	1318	4772	-55.1	-1.69	0.33
29	SLU 30	0	1273	4666	-52.39	-1.72	0.33
29	SLU 31	0	1397	5052	-56.77	-1.94	0.38
29	SLU 32	0	1497	5294	-62.22	-1.93	0.38
29	SLU 33	0	1452	5187	-59.51	-1.96	0.39
29	SLU 34	0	1412	5094	-57.34	-1.97	0.39
29	SLU 35	0	1512	5336	-62.8	-1.96	0.39
29	SLU 36	0	1467	5230	-60.08	-1.99	0.39
29	SLU 37	0	1503	5314	-62.43	-1.95	0.38
29	SLU 38	0	1458	5208	-59.72	-1.98	0.39
29	SLU 39	0	1551	5461	-64.44	-2	0.4
29	SLU 40	0	1506	5355	-61.72	-2.03	0.4
29	SLU 41	0	1567	5504	-65.01	-2.03	0.4
29	SLU 42	0	1522	5397	-62.3	-2.06	0.41
29	SLU 43	0	1442	5433	-61.21	-1.75	0.36
29	SLU 44	0	1366	5256	-56.69	-1.8	0.36
29	SLU 45	0	1467	5498	-62.15	-1.79	0.36
29	SLU 46	0	1422	5392	-59.43	-1.82	0.37
29	SLU 47	0	1382	5299	-57.26	-1.83	0.37
29	SLU 48	0	1482	5541	-62.72	-1.82	0.37
29	SLU 49	0	1437	5435	-60	-1.85	0.37
29	SLU 50	0	1473	5519	-62.36	-1.81	0.36
29	SLU 51	0	1427	5412	-59.64	-1.84	0.37
29	SLU 52	0	1551	5798	-64.03	-2.06	0.41
29	SLU 53	0	1652	6040	-69.48	-2.05	0.41
29	SLU 54	0	1607	5934	-66.77	-2.08	0.42
29	SLU 55	0	1567	5841	-64.6	-2.09	0.42
29	SLU 56	0	1667	6083	-70.05	-2.08	0.42

Nodo	Cont.	Reazione a traslazione			Reazione a rotazione		
Ind.	N.br.	x	y	z	x	y	z
29	SLU 57	0	1622	5976	-67.34	-2.11	0.42
29	SLU 58	0	1658	6061	-69.69	-2.07	0.42
29	SLU 59	0	1612	5954	-66.98	-2.1	0.42
29	SLU 60	0	1706	6207	-71.69	-2.12	0.43
29	SLU 61	0	1661	6101	-68.98	-2.15	0.43
29	SLU 62	0	1722	6250	-72.26	-2.15	0.43
29	SLU 63	0	1676	6144	-69.55	-2.18	0.44
29	SLU 64	0	1583	5835	-66.65	-1.97	0.39
29	SLU 65	0	1507	5658	-62.13	-2.02	0.4
29	SLU 66	0	1608	5900	-67.58	-2.01	0.4
29	SLU 67	0	1562	5793	-64.87	-2.05	0.4
29	SLU 68	0	1523	5700	-62.7	-2.05	0.4
29	SLU 69	0	1623	5942	-68.15	-2.04	0.4
29	SLU 70	0	1578	5836	-65.44	-2.08	0.41
29	SLU 71	0	1614	5920	-67.79	-2.03	0.4
29	SLU 72	0	1568	5814	-65.08	-2.06	0.41
29	SLU 73	0	1692	6199	-69.46	-2.28	0.45
29	SLU 74	0	1793	6442	-74.92	-2.27	0.45
29	SLU 75	0	1747	6335	-72.2	-2.31	0.46
29	SLU 76	0	1708	6242	-70.04	-2.31	0.46
29	SLU 77	0	1808	6484	-75.49	-2.3	0.46
29	SLU 78	0	1763	6378	-72.78	-2.34	0.46
29	SLU 79	0	1799	6462	-75.13	-2.29	0.45
29	SLU 80	0	1753	6356	-72.41	-2.32	0.46
29	SLU 81	0	1847	6609	-77.13	-2.34	0.47
29	SLU 82	0	1802	6503	-74.42	-2.37	0.47
29	SLU 83	0	1862	6652	-77.7	-2.37	0.47
29	SLU 84	0	1817	6545	-74.99	-2.4	0.48
29	SLE RA 1	0	1187	4400	-50.07	-1.47	0.29
29	SLE RA 2	0	1136	4282	-47.06	-1.5	0.3
29	SLE RA 3	0	1203	4443	-50.69	-1.5	0.3
29	SLE RA 4	0	1173	4372	-48.89	-1.52	0.3
29	SLE RA 5	0	1147	4310	-47.44	-1.52	0.3
29	SLE RA 6	0	1213	4472	-51.08	-1.52	0.3
29	SLE RA 7	0	1183	4401	-49.27	-1.54	0.3
29	SLE RA 8	0	1207	4457	-50.84	-1.51	0.3
29	SLE RA 9	0	1177	4386	-49.03	-1.53	0.3
29	SLE RA 10	0	1260	4643	-51.95	-1.68	0.33
29	SLE RA 11	0	1327	4805	-55.59	-1.67	0.33
29	SLE RA 12	0	1296	4734	-53.78	-1.69	0.34
29	SLE RA 13	0	1270	4672	-52.33	-1.7	0.34
29	SLE RA 14	0	1337	4833	-55.97	-1.69	0.34
29	SLE RA 15	0	1307	4762	-54.16	-1.71	0.34
29	SLE RA 16	0	1330	4818	-55.73	-1.68	0.34
29	SLE RA 17	0	1300	4747	-53.92	-1.7	0.34
29	SLE RA 18	0	1363	4916	-57.06	-1.72	0.34
29	SLE RA 19	0	1333	4845	-55.25	-1.74	0.35
29	SLE RA 20	0	1373	4945	-57.44	-1.74	0.35
29	SLE RA 21	0	1343	4874	-55.63	-1.76	0.35
29	SLE FR 1	0	1187	4400	-50.07	-1.47	0.29
29	SLE FR 2	0	1177	4376	-49.47	-1.47	0.3
29	SLE FR 3	0	1191	4411	-50.23	-1.48	0.3
29	SLE FR 4	0	1229	4531	-51.57	-1.55	0.31
29	SLE FR 5	0	1244	4566	-52.32	-1.55	0.31
29	SLE FR 6	0	1275	4658	-53.57	-1.59	0.32
29	SLE QP 1	0	1187	4400	-50.07	-1.47	0.29
29	SLE QP 2	0	1239	4555	-52.17	-1.54	0.31
29	SLD 1	6	1234	4718	-54.06	-0.6	0.51
29	SLD 2	6	1234	4718	-54.06	-0.6	0.51
29	SLD 3	0	866	3958	-33.9	0.82	0.44
29	SLD 4	0	866	3958	-33.9	0.82	0.44
29	SLD 5	11	1796	5756	-83.31	-3.42	0.49
29	SLD 6	11	1796	5756	-83.31	-3.42	0.49
29	SLD 7	-9	570	3224	-16.12	1.32	0.23
29	SLD 8	-9	570	3224	-16.12	1.32	0.23
29	SLD 9	9	1909	5886	-88.22	-4.41	0.39
29	SLD 10	9	1909	5886	-88.22	-4.41	0.39
29	SLD 11	-11	683	3354	-21.03	0.33	0.13
29	SLD 12	-11	683	3354	-21.03	0.33	0.13
29	SLD 13	-1	1613	5152	-70.43	-3.9	0.18
29	SLD 14	-1	1613	5152	-70.43	-3.9	0.18
29	SLD 15	-6	1245	4392	-50.28	-2.48	0.11
29	SLD 16	-6	1245	4392	-50.28	-2.48	0.11
29	SLV 1	15	1228	4940	-56.65	0.64	0.78
29	SLV 2	15	1228	4940	-56.65	0.64	0.78
29	SLV 3	1	364	3153	-9.27	3.99	0.61
29	SLV 4	1	364	3153	-9.27	3.99	0.61
29	SLV 5	25	2546	7382	-125.37	-5.96	0.72
29	SLV 6	25	2546	7382	-125.37	-5.96	0.72
29	SLV 7	-20	-334	1423	32.56	5.19	0.13
29	SLV 8	-20	-334	1423	32.56	5.19	0.13
29	SLV 9	20	2812	7687	-136.89	-8.28	0.49
29	SLV 10	20	2812	7687	-136.89	-8.28	0.49
29	SLV 11	-25	-68	1728	21.03	2.88	-0.1
29	SLV 12	-25	-68	1728	21.03	2.88	-0.1
29	SLV 13	-1	2115	5957	-95.07	-7.07	0.01
29	SLV 14	-1	2115	5957	-95.07	-7.07	0.01
29	SLV 15	-15	1251	4170	-47.69	-3.73	-0.16
29	SLV 16	-15	1251	4170	-47.69	-3.73	-0.16
30	SLU 1	0	1362	4421	-48.17	0.85	0

Nodo	Cont.	Reazione a traslazione			Reazione a rotazione		
Ind.	N.br.	x	y	z	x	y	z
30	SLU 2	0	1262	4226	-44.41	0.9	0
30	SLU 3	0	1393	4487	-49.28	0.87	0
30	SLU 4	0	1333	4370	-47.03	0.9	0
30	SLU 5	0	1281	4269	-45.12	0.9	0
30	SLU 6	0	1413	4530	-49.99	0.87	0
30	SLU 7	0	1352	4413	-47.74	0.9	0
30	SLU 8	0	1401	4507	-49.58	0.86	0
30	SLU 9	0	1341	4390	-47.33	0.89	0
30	SLU 10	0	1446	4764	-50.98	1.02	0
30	SLU 11	0	1577	5025	-55.84	0.99	0
30	SLU 12	0	1517	4908	-53.59	1.02	0
30	SLU 13	0	1465	4807	-51.68	1.03	0
30	SLU 14	0	1597	5068	-56.55	0.99	0
30	SLU 15	0	1537	4951	-54.3	1.02	0
30	SLU 16	0	1585	5044	-56.14	0.98	0
30	SLU 17	0	1525	4927	-53.89	1.01	0
30	SLU 18	0	1625	5188	-57.54	1.03	0
30	SLU 19	0	1565	5072	-55.29	1.06	0
30	SLU 20	0	1644	5231	-58.25	1.03	0
30	SLU 21	0	1584	5115	-56	1.06	0
30	SLU 22	0	1509	4814	-53.4	0.97	0
30	SLU 23	0	1409	4620	-49.65	1.02	0
30	SLU 24	0	1540	4881	-54.52	0.99	0
30	SLU 25	0	1480	4764	-52.26	1.01	0
30	SLU 26	0	1429	4663	-50.35	1.02	0
30	SLU 27	0	1560	4924	-55.22	0.99	0
30	SLU 28	0	1500	4807	-52.97	1.02	0
30	SLU 29	0	1548	4900	-54.81	0.98	0
30	SLU 30	0	1488	4783	-52.56	1.01	0
30	SLU 31	0	1593	5157	-56.21	1.14	0
30	SLU 32	0	1724	5418	-61.08	1.11	0
30	SLU 33	0	1664	5301	-58.83	1.14	0
30	SLU 34	0	1613	5200	-56.92	1.15	0
30	SLU 35	0	1744	5461	-61.79	1.11	0
30	SLU 36	0	1684	5344	-59.53	1.14	0
30	SLU 37	0	1732	5438	-61.38	1.1	0
30	SLU 38	0	1672	5321	-59.12	1.13	0
30	SLU 39	0	1772	5582	-62.78	1.15	0
30	SLU 40	0	1712	5465	-60.52	1.17	0
30	SLU 41	0	1792	5625	-63.48	1.15	0
30	SLU 42	0	1732	5508	-61.23	1.18	0
30	SLU 43	0	1720	5612	-60.82	1.07	0
30	SLU 44	0	1620	5417	-57.07	1.12	0
30	SLU 45	0	1751	5678	-61.94	1.08	0
30	SLU 46	0	1691	5562	-59.69	1.11	0
30	SLU 47	0	1639	5460	-57.77	1.12	0
30	SLU 48	0	1771	5721	-62.64	1.09	0
30	SLU 49	0	1711	5605	-60.39	1.12	0
30	SLU 50	0	1759	5698	-62.24	1.08	0
30	SLU 51	0	1699	5581	-59.98	1.11	0
30	SLU 52	0	1804	5955	-63.63	1.24	0
30	SLU 53	0	1935	6216	-68.5	1.21	0
30	SLU 54	0	1875	6099	-66.25	1.23	0
30	SLU 55	0	1823	5998	-64.34	1.24	0
30	SLU 56	0	1955	6259	-69.21	1.21	0
30	SLU 57	0	1895	6142	-66.95	1.24	0
30	SLU 58	0	1943	6235	-68.8	1.2	0
30	SLU 59	0	1883	6119	-66.54	1.23	0
30	SLU 60	0	1983	6380	-70.2	1.24	0
30	SLU 61	0	1923	6263	-67.95	1.27	0
30	SLU 62	0	2002	6423	-70.9	1.25	0
30	SLU 63	0	1942	6306	-68.65	1.28	0
30	SLU 64	0	1867	6005	-66.06	1.19	0
30	SLU 65	0	1767	5811	-62.3	1.23	0
30	SLU 66	0	1898	6072	-67.17	1.2	0
30	SLU 67	0	1838	5955	-64.92	1.23	0
30	SLU 68	0	1787	5854	-63.01	1.24	0
30	SLU 69	-1	1918	6115	-67.88	1.21	0
30	SLU 70	0	1858	5998	-65.63	1.23	0
30	SLU 71	-1	1906	6091	-67.47	1.2	0
30	SLU 72	0	1846	5975	-65.22	1.22	0
30	SLU 73	0	1951	6348	-68.87	1.36	0
30	SLU 74	-1	2082	6609	-73.74	1.32	0
30	SLU 75	-1	2022	6493	-71.48	1.35	0
30	SLU 76	0	1971	6391	-69.57	1.36	0
30	SLU 77	-1	2102	6652	-74.44	1.33	0
30	SLU 78	-1	2042	6536	-72.19	1.36	0
30	SLU 79	-1	2090	6629	-74.03	1.32	0
30	SLU 80	-1	2030	6512	-71.78	1.35	0
30	SLU 81	-1	2130	6773	-75.43	1.36	0
30	SLU 82	0	2070	6657	-73.18	1.39	0
30	SLU 83	-1	2150	6816	-76.14	1.37	0
30	SLU 84	-1	2090	6700	-73.89	1.39	0
30	SLE RA 1	0	1404	4533	-49.66	0.89	0
30	SLE RA 2	0	1337	4403	-47.16	0.92	0
30	SLE RA 3	0	1425	4577	-50.41	0.9	0
30	SLE RA 4	0	1385	4500	-48.9	0.92	0
30	SLE RA 5	0	1350	4432	-47.63	0.92	0
30	SLE RA 6	0	1438	4606	-50.88	0.9	0
30	SLE RA 7	0	1398	4528	-49.38	0.92	0

Nodo	Cont.	Reazione a traslazione			Reazione a rotazione		
Ind.	N.br.	x	y	z	x	y	z
30	SLE RA 8	0	1430	4590	-50.6	0.89	0
30	SLE RA 9	0	1390	4513	-49.1	0.91	0
30	SLE RA 10	0	1460	4762	-51.54	1	0
30	SLE RA 11	0	1547	4936	-54.78	0.98	0
30	SLE RA 12	0	1507	4858	-53.28	1	0
30	SLE RA 13	0	1473	4790	-52.01	1	0
30	SLE RA 14	0	1560	4964	-55.25	0.98	0
30	SLE RA 15	0	1520	4887	-53.75	1	0
30	SLE RA 16	0	1553	4949	-54.98	0.97	0
30	SLE RA 17	0	1513	4871	-53.48	0.99	0
30	SLE RA 18	0	1579	5045	-55.91	1	0
30	SLE RA 19	0	1539	4967	-54.41	1.02	0
30	SLE RA 20	0	1592	5074	-56.38	1.01	0
30	SLE RA 21	0	1552	4996	-54.88	1.03	0
30	SLE FR 1	0	1404	4533	-49.66	0.89	0
30	SLE FR 2	0	1391	4507	-49.16	0.89	0
30	SLE FR 3	0	1409	4544	-49.85	0.89	0
30	SLE FR 4	0	1443	4661	-51.04	0.93	0
30	SLE FR 5	0	1462	4698	-51.73	0.92	0
30	SLE FR 6	0	1492	4789	-52.79	0.95	0
30	SLE QP 1	0	1404	4533	-49.66	0.89	0
30	SLE QP 2	0	1457	4687	-51.54	0.92	0
30	SLD 1	0	1839	5306	-65.35	3.57	0.01
30	SLD 2	0	1839	5306	-65.35	3.57	0.01
30	SLD 3	5	1416	4496	-49.85	1.53	0.01
30	SLD 4	5	1416	4496	-49.85	1.53	0.01
30	SLD 5	-8	2212	6101	-79.19	4.82	0.01
30	SLD 6	-8	2212	6101	-79.19	4.82	0.01
30	SLD 7	9	804	3401	-27.52	-2	0
30	SLD 8	9	804	3401	-27.52	-2	0
30	SLD 9	-10	2109	5972	-75.56	3.84	0.01
30	SLD 10	-10	2109	5972	-75.56	3.84	0.01
30	SLD 11	7	701	3273	-23.89	-2.98	-0.01
30	SLD 12	7	701	3273	-23.89	-2.98	-0.01
30	SLD 13	-6	1497	4878	-53.23	0.32	0
30	SLD 14	-6	1497	4878	-53.23	0.32	0
30	SLD 15	-1	1074	4068	-37.73	-1.73	-0.01
30	SLD 16	-1	1074	4068	-37.73	-1.73	-0.01
30	SLV 1	0	2354	6142	-83.98	7.12	0.02
30	SLV 2	0	2354	6142	-83.98	7.12	0.02
30	SLV 3	12	1361	4235	-47.53	2.33	0.01
30	SLV 4	12	1361	4235	-47.53	2.33	0.01
30	SLV 5	-18	3232	8016	-116.55	10.05	0.02
30	SLV 6	-18	3232	8016	-116.55	10.05	0.02
30	SLV 7	21	-78	1658	4.95	-5.92	-0.01
30	SLV 8	21	-78	1658	4.95	-5.92	-0.01
30	SLV 9	-22	2991	7715	-108.02	7.76	0.01
30	SLV 10	-22	2991	7715	-108.02	7.76	0.01
30	SLV 11	17	-319	1357	13.47	-8.2	-0.02
30	SLV 12	17	-319	1357	13.47	-8.2	-0.02
30	SLV 13	-13	1552	5138	-55.55	-0.49	-0.01
30	SLV 14	-13	1552	5138	-55.55	-0.49	-0.01
30	SLV 15	-1	559	3231	-19.1	-5.28	-0.02
30	SLV 16	-1	559	3231	-19.1	-5.28	-0.02
31	SLU 1	-5	-23	2635	16.55	-1.4	-0.02
31	SLU 2	-4	-119	2441	21.34	-1.37	-0.01
31	SLU 3	-5	-27	2672	17.04	-1.43	-0.02
31	SLU 4	-5	-84	2556	19.92	-1.41	-0.01
31	SLU 5	-4	-123	2472	21.67	-1.39	-0.01
31	SLU 6	-5	-31	2703	17.37	-1.45	-0.02
31	SLU 7	-5	-88	2587	20.25	-1.43	-0.01
31	SLU 8	-5	-31	2697	17.2	-1.44	-0.02
31	SLU 9	-5	-88	2581	20.08	-1.43	-0.01
31	SLU 10	-5	-125	2683	24.12	-1.51	-0.01
31	SLU 11	-5	-33	2914	19.82	-1.57	-0.02
31	SLU 12	-5	-91	2798	22.7	-1.55	-0.01
31	SLU 13	-5	-129	2714	24.45	-1.53	-0.01
31	SLU 14	-5	-37	2945	20.15	-1.59	-0.02
31	SLU 15	-5	-95	2829	23.03	-1.57	-0.01
31	SLU 16	-5	-38	2939	19.98	-1.59	-0.02
31	SLU 17	-5	-95	2823	22.86	-1.57	-0.01
31	SLU 18	-5	-33	2981	20.52	-1.6	-0.02
31	SLU 19	-5	-90	2864	23.4	-1.58	-0.02
31	SLU 20	-5	-37	3012	20.85	-1.62	-0.02
31	SLU 21	-5	-94	2895	23.73	-1.6	-0.02
31	SLU 22	-5	-29	2844	19.05	-1.5	-0.02
31	SLU 23	-5	-125	2650	23.84	-1.47	-0.01
31	SLU 24	-5	-33	2881	19.54	-1.53	-0.02
31	SLU 25	-5	-90	2765	22.42	-1.51	-0.01
31	SLU 26	-5	-129	2681	24.17	-1.49	-0.01
31	SLU 27	-5	-37	2912	19.87	-1.55	-0.02
31	SLU 28	-5	-94	2796	22.75	-1.53	-0.01
31	SLU 29	-5	-37	2907	19.7	-1.55	-0.02
31	SLU 30	-5	-95	2790	22.58	-1.53	-0.01
31	SLU 31	-5	-132	2892	26.62	-1.61	-0.01
31	SLU 32	-5	-40	3123	22.33	-1.67	-0.02
31	SLU 33	-5	-97	3007	25.2	-1.65	-0.02
31	SLU 34	-5	-136	2923	26.95	-1.63	-0.01
31	SLU 35	-6	-44	3154	22.65	-1.69	-0.02
31	SLU 36	-5	-101	3038	25.53	-1.67	-0.02

Nodo	Cont.	Reazione a traslazione			Reazione a rotazione		
Ind.	N.br.	x	y	z	x	y	z
31	SLU 37	-6	-44	3149	22.48	-1.69	-0.02
31	SLU 38	-5	-101	3032	25.36	-1.67	-0.02
31	SLU 39	-6	-39	3190	23.02	-1.7	-0.02
31	SLU 40	-5	-96	3073	25.9	-1.68	-0.02
31	SLU 41	-6	-43	3221	23.35	-1.72	-0.02
31	SLU 42	-6	-100	3105	26.23	-1.71	-0.02
31	SLU 43	-6	-28	3354	20.65	-1.78	-0.02
31	SLU 44	-6	-123	3160	25.45	-1.75	-0.02
31	SLU 45	-6	-31	3391	21.15	-1.81	-0.02
31	SLU 46	-6	-89	3274	24.03	-1.79	-0.02
31	SLU 47	-6	-127	3191	25.77	-1.77	-0.02
31	SLU 48	-6	-35	3422	21.48	-1.83	-0.02
31	SLU 49	-6	-93	3306	24.35	-1.81	-0.02
31	SLU 50	-6	-36	3416	21.31	-1.83	-0.02
31	SLU 51	-6	-93	3300	24.18	-1.81	-0.02
31	SLU 52	-6	-130	3402	28.23	-1.89	-0.02
31	SLU 53	-6	-38	3633	23.93	-1.95	-0.02
31	SLU 54	-6	-95	3516	26.81	-1.93	-0.02
31	SLU 55	-6	-134	3433	28.56	-1.92	-0.02
31	SLU 56	-6	-42	3664	24.26	-1.97	-0.02
31	SLU 57	-6	-99	3548	27.13	-1.95	-0.02
31	SLU 58	-6	-42	3658	24.09	-1.97	-0.02
31	SLU 59	-6	-100	3542	26.97	-1.95	-0.02
31	SLU 60	-7	-37	3699	24.63	-1.98	-0.02
31	SLU 61	-6	-95	3583	27.51	-1.96	-0.02
31	SLU 62	-7	-41	3731	24.96	-2.01	-0.02
31	SLU 63	-6	-99	3614	27.83	-1.99	-0.02
31	SLU 64	-6	-34	3563	23.16	-1.89	-0.02
31	SLU 65	-6	-130	3369	27.95	-1.85	-0.02
31	SLU 66	-6	-38	3600	23.65	-1.91	-0.02
31	SLU 67	-6	-95	3484	26.53	-1.89	-0.02
31	SLU 68	-6	-134	3400	28.28	-1.88	-0.02
31	SLU 69	-6	-42	3631	23.98	-1.94	-0.02
31	SLU 70	-6	-99	3515	26.85	-1.92	-0.02
31	SLU 71	-6	-42	3625	23.81	-1.93	-0.02
31	SLU 72	-6	-99	3509	26.68	-1.91	-0.02
31	SLU 73	-6	-136	3611	30.73	-1.99	-0.02
31	SLU 74	-7	-45	3842	26.43	-2.05	-0.02
31	SLU 75	-7	-102	3725	29.31	-2.03	-0.02
31	SLU 76	-7	-140	3642	31.06	-2.02	-0.02
31	SLU 77	-7	-49	3873	26.76	-2.08	-0.02
31	SLU 78	-7	-106	3757	29.64	-2.06	-0.02
31	SLU 79	-7	-49	3867	26.59	-2.07	-0.02
31	SLU 80	-7	-106	3751	29.47	-2.05	-0.02
31	SLU 81	-7	-44	3909	27.13	-2.09	-0.02
31	SLU 82	-7	-101	3792	30.01	-2.07	-0.02
31	SLU 83	-7	-48	3940	27.46	-2.11	-0.02
31	SLU 84	-7	-105	3823	30.33	-2.09	-0.02
31	SLE RA 1	-5	-25	2695	17.26	-1.43	-0.02
31	SLE RA 2	-5	-89	2565	20.46	-1.41	-0.01
31	SLE RA 3	-5	-27	2719	17.59	-1.45	-0.02
31	SLE RA 4	-5	-65	2642	19.51	-1.43	-0.01
31	SLE RA 5	-5	-91	2586	20.68	-1.42	-0.01
31	SLE RA 6	-5	-30	2740	17.81	-1.46	-0.02
31	SLE RA 7	-5	-68	2663	19.73	-1.45	-0.01
31	SLE RA 8	-5	-30	2736	17.7	-1.46	-0.02
31	SLE RA 9	-5	-68	2659	19.61	-1.45	-0.01
31	SLE RA 10	-5	-93	2727	22.31	-1.5	-0.01
31	SLE RA 11	-5	-32	2881	19.45	-1.54	-0.02
31	SLE RA 12	-5	-70	2803	21.36	-1.53	-0.02
31	SLE RA 13	-5	-96	2748	22.53	-1.52	-0.01
31	SLE RA 14	-5	-34	2902	19.66	-1.55	-0.02
31	SLE RA 15	-5	-73	2824	21.58	-1.54	-0.02
31	SLE RA 16	-5	-35	2898	19.55	-1.55	-0.02
31	SLE RA 17	-5	-73	2820	21.47	-1.54	-0.02
31	SLE RA 18	-5	-31	2925	19.91	-1.56	-0.02
31	SLE RA 19	-5	-70	2848	21.83	-1.55	-0.02
31	SLE RA 20	-5	-34	2946	20.13	-1.58	-0.02
31	SLE RA 21	-5	-72	2868	22.05	-1.56	-0.02
31	SLE FR 1	-5	-25	2695	17.26	-1.43	-0.02
31	SLE FR 2	-5	-38	2669	17.9	-1.42	-0.02
31	SLE FR 3	-5	-26	2703	17.35	-1.43	-0.02
31	SLE FR 4	-5	-40	2738	18.7	-1.46	-0.02
31	SLE FR 5	-5	-28	2772	18.14	-1.47	-0.02
31	SLE FR 6	-5	-28	2810	18.59	-1.49	-0.02
31	SLE QP 1	-5	-25	2695	17.26	-1.43	-0.02
31	SLE QP 2	-5	-27	2764	18.06	-1.47	-0.02
31	SLD 1	-4	255	2421	7.48	-0.75	-0.01
31	SLD 2	-4	255	2421	7.48	-0.75	-0.01
31	SLD 3	-1	-27	1940	19.72	-0.04	-0.01
31	SLD 4	-1	-27	1940	19.72	-0.04	-0.01
31	SLD 5	-8	485	3390	-3.67	-2.32	-0.02
31	SLD 6	-8	485	3390	-3.67	-2.32	-0.02
31	SLD 7	0	-454	1788	37.11	0.03	0
31	SLD 8	0	-454	1788	37.11	0.03	0
31	SLD 9	-10	401	3740	-1	-2.96	-0.03
31	SLD 10	-10	401	3740	-1	-2.96	-0.03
31	SLD 11	-1	-538	2138	39.79	-0.61	-0.01
31	SLD 12	-1	-538	2138	39.79	-0.61	-0.01
31	SLD 13	-8	-26	3588	16.4	-2.89	-0.03

Nodo	Cont.	Reazione a traslazione			Reazione a rotazione		
Ind.	N.br.	x	y	z	x	y	z
31	SLD 14	-8	-26	3588	16.4	-2.89	-0.03
31	SLD 15	-6	-308	3107	28.63	-2.19	-0.02
31	SLD 16	-6	-308	3107	28.63	-2.19	-0.02
31	SLV 1	-3	641	1978	-7.21	0.2	0
31	SLV 2	-3	641	1978	-7.21	0.2	0
31	SLV 3	3	-32	819	22.08	1.88	0.01
31	SLV 4	3	-32	819	22.08	1.88	0.01
31	SLV 5	-13	1194	4286	-33.95	-3.53	-0.03
31	SLV 6	-13	1194	4286	-33.95	-3.53	-0.03
31	SLV 7	6	-1049	422	63.69	2.1	0.01
31	SLV 8	6	-1049	422	63.69	2.1	0.01
31	SLV 9	-16	995	5106	-27.57	-5.03	-0.04
31	SLV 10	-16	995	5106	-27.57	-5.03	-0.04
31	SLV 11	3	-1248	1241	70.06	0.59	0
31	SLV 12	3	-1248	1241	70.06	0.59	0
31	SLV 13	-13	-22	4709	14.03	-4.82	-0.04
31	SLV 14	-13	-22	4709	14.03	-4.82	-0.04
31	SLV 15	-7	-695	3550	43.32	-3.13	-0.03
31	SLV 16	-7	-695	3550	43.32	-3.13	-0.03
32	SLU 1	10	346	2950	-27.67	2.1	-0.06
32	SLU 2	11	285	2960	-26.51	2.18	-0.06
32	SLU 3	11	354	2991	-28.32	2.13	-0.06
32	SLU 4	11	317	2998	-27.62	2.18	-0.06
32	SLU 5	11	288	2988	-26.87	2.2	-0.06
32	SLU 6	11	357	3018	-28.68	2.15	-0.06
32	SLU 7	11	320	3025	-27.98	2.2	-0.06
32	SLU 8	11	352	3004	-28.4	2.13	-0.06
32	SLU 9	11	316	3011	-27.7	2.18	-0.06
32	SLU 10	12	340	3326	-30.36	2.47	-0.07
32	SLU 11	12	409	3357	-32.16	2.42	-0.07
32	SLU 12	12	372	3363	-31.47	2.47	-0.07
32	SLU 13	13	343	3353	-30.72	2.49	-0.07
32	SLU 14	12	412	3384	-32.52	2.43	-0.07
32	SLU 15	12	375	3390	-31.83	2.48	-0.07
32	SLU 16	12	407	3370	-32.24	2.42	-0.07
32	SLU 17	12	371	3376	-31.54	2.47	-0.07
32	SLU 18	12	425	3472	-33.17	2.51	-0.07
32	SLU 19	13	388	3479	-32.47	2.56	-0.07
32	SLU 20	13	428	3499	-33.53	2.53	-0.07
32	SLU 21	13	391	3506	-32.83	2.58	-0.07
32	SLU 22	12	395	3259	-31.13	2.33	-0.07
32	SLU 23	12	334	3269	-29.96	2.41	-0.07
32	SLU 24	12	402	3300	-31.77	2.36	-0.07
32	SLU 25	12	365	3306	-31.07	2.41	-0.07
32	SLU 26	12	337	3297	-30.33	2.43	-0.07
32	SLU 27	12	405	3327	-32.13	2.38	-0.07
32	SLU 28	12	368	3334	-31.43	2.43	-0.07
32	SLU 29	12	401	3313	-31.85	2.36	-0.07
32	SLU 30	12	364	3320	-31.15	2.41	-0.07
32	SLU 31	14	389	3635	-33.81	2.7	-0.08
32	SLU 32	13	457	3666	-35.61	2.65	-0.08
32	SLU 33	14	421	3672	-34.92	2.7	-0.08
32	SLU 34	14	392	3662	-34.17	2.72	-0.08
32	SLU 35	13	460	3693	-35.97	2.67	-0.08
32	SLU 36	14	424	3699	-35.28	2.72	-0.08
32	SLU 37	13	456	3679	-35.69	2.65	-0.08
32	SLU 38	14	419	3685	-34.99	2.7	-0.08
32	SLU 39	14	473	3781	-36.62	2.74	-0.08
32	SLU 40	14	437	3787	-35.92	2.79	-0.08
32	SLU 41	14	476	3808	-36.98	2.76	-0.08
32	SLU 42	14	440	3815	-36.28	2.81	-0.08
32	SLU 43	13	434	3729	-34.79	2.65	-0.08
32	SLU 44	14	373	3739	-33.63	2.73	-0.08
32	SLU 45	13	441	3770	-35.44	2.68	-0.08
32	SLU 46	14	404	3777	-34.74	2.73	-0.08
32	SLU 47	14	376	3767	-33.99	2.75	-0.08
32	SLU 48	13	444	3797	-35.8	2.7	-0.08
32	SLU 49	14	407	3804	-35.1	2.75	-0.08
32	SLU 50	13	440	3783	-35.52	2.68	-0.08
32	SLU 51	14	403	3790	-34.82	2.73	-0.08
32	SLU 52	15	428	4105	-37.48	3.02	-0.09
32	SLU 53	15	496	4136	-39.28	2.97	-0.09
32	SLU 54	15	459	4142	-38.58	3.02	-0.09
32	SLU 55	15	431	4132	-37.84	3.04	-0.09
32	SLU 56	15	499	4163	-39.64	2.98	-0.09
32	SLU 57	15	463	4170	-38.95	3.03	-0.09
32	SLU 58	15	495	4149	-39.36	2.97	-0.09
32	SLU 59	15	458	4155	-38.66	3.02	-0.09
32	SLU 60	15	512	4251	-40.29	3.06	-0.09
32	SLU 61	15	476	4258	-39.59	3.11	-0.09
32	SLU 62	15	515	4278	-40.65	3.08	-0.09
32	SLU 63	16	479	4285	-39.95	3.13	-0.09
32	SLU 64	14	482	4038	-38.25	2.88	-0.08
32	SLU 65	15	421	4048	-37.08	2.96	-0.08
32	SLU 66	14	489	4079	-38.89	2.91	-0.09
32	SLU 67	15	453	4085	-38.19	2.96	-0.09
32	SLU 68	15	424	4076	-37.44	2.98	-0.09
32	SLU 69	15	492	4106	-39.25	2.93	-0.09
32	SLU 70	15	456	4113	-38.55	2.98	-0.09
32	SLU 71	14	488	4092	-38.97	2.91	-0.09

Nodo	Cont.	Reazione a traslazione			Reazione a rotazione		
Ind.	N.br.	x	y	z	x	y	z
32	SLU 72	15	451	4099	-38.27	2.96	-0.09
32	SLU 73	16	476	4414	-40.93	3.25	-0.09
32	SLU 74	16	544	4445	-42.73	3.2	-0.09
32	SLU 75	16	508	4451	-42.04	3.25	-0.09
32	SLU 76	16	479	4441	-41.29	3.27	-0.09
32	SLU 77	16	547	4472	-43.09	3.22	-0.09
32	SLU 78	16	511	4478	-42.4	3.27	-0.09
32	SLU 79	16	543	4458	-42.81	3.2	-0.09
32	SLU 80	16	507	4464	-42.11	3.25	-0.09
32	SLU 81	16	561	4560	-43.74	3.29	-0.1
32	SLU 82	17	524	4566	-43.04	3.34	-0.1
32	SLU 83	17	564	4587	-44.1	3.31	-0.1
32	SLU 84	17	527	4594	-43.4	3.36	-0.1
32	SLE RA 1	11	360	3038	-28.66	2.16	-0.06
32	SLE RA 2	11	320	3045	-27.89	2.22	-0.06
32	SLE RA 3	11	365	3066	-29.09	2.19	-0.06
32	SLE RA 4	11	341	3070	-28.63	2.22	-0.06
32	SLE RA 5	11	322	3063	-28.13	2.23	-0.06
32	SLE RA 6	11	367	3084	-29.33	2.2	-0.06
32	SLE RA 7	11	343	3088	-28.87	2.23	-0.06
32	SLE RA 8	11	364	3074	-29.14	2.18	-0.06
32	SLE RA 9	11	340	3079	-28.68	2.22	-0.06
32	SLE RA 10	12	356	3289	-30.45	2.41	-0.07
32	SLE RA 11	12	402	3309	-31.65	2.38	-0.07
32	SLE RA 12	12	377	3314	-31.19	2.41	-0.07
32	SLE RA 13	12	358	3307	-30.69	2.42	-0.07
32	SLE RA 14	12	404	3328	-31.89	2.39	-0.07
32	SLE RA 15	12	379	3332	-31.43	2.42	-0.07
32	SLE RA 16	12	401	3318	-31.7	2.38	-0.07
32	SLE RA 17	12	377	3322	-31.24	2.41	-0.07
32	SLE RA 18	12	413	3386	-32.32	2.44	-0.07
32	SLE RA 19	12	388	3391	-31.86	2.47	-0.07
32	SLE RA 20	12	415	3404	-32.56	2.45	-0.07
32	SLE RA 21	12	390	3409	-32.1	2.48	-0.07
32	SLE FR 1	11	360	3038	-28.66	2.16	-0.06
32	SLE FR 2	11	352	3039	-28.51	2.17	-0.06
32	SLE FR 3	11	361	3045	-28.76	2.17	-0.06
32	SLE FR 4	11	368	3144	-29.6	2.26	-0.07
32	SLE FR 5	11	377	3150	-29.86	2.25	-0.07
32	SLE FR 6	11	386	3212	-30.49	2.3	-0.07
32	SLE QP 1	11	360	3038	-28.66	2.16	-0.06
32	SLE QP 2	11	376	3143	-29.76	2.25	-0.07
32	SLD 1	10	434	3439	-38.15	3.59	-0.07
32	SLD 2	10	434	3439	-38.15	3.59	-0.07
32	SLD 3	8	106	3206	-25.41	2.94	-0.05
32	SLD 4	8	106	3206	-25.41	2.94	-0.05
32	SLD 5	14	891	3585	-51.59	3.62	-0.09
32	SLD 6	14	891	3585	-51.59	3.62	-0.09
32	SLD 7	7	-203	2808	-9.14	1.48	-0.03
32	SLD 8	7	-203	2808	-9.14	1.48	-0.03
32	SLD 9	15	954	3477	-50.38	3.01	-0.1
32	SLD 10	15	954	3477	-50.38	3.01	-0.1
32	SLD 11	8	-139	2700	-7.93	0.87	-0.04
32	SLD 12	8	-139	2700	-7.93	0.87	-0.04
32	SLD 13	15	646	3079	-34.11	1.55	-0.08
32	SLD 14	15	646	3079	-34.11	1.55	-0.08
32	SLD 15	13	317	2846	-21.37	0.91	-0.07
32	SLD 16	13	317	2846	-21.37	0.91	-0.07
32	SLV 1	8	511	3842	-49.4	5.42	-0.07
32	SLV 2	8	511	3842	-49.4	5.42	-0.07
32	SLV 3	3	-261	3290	-19.57	3.85	-0.02
32	SLV 4	3	-261	3290	-19.57	3.85	-0.02
32	SLV 5	18	1587	4189	-80.89	5.58	-0.13
32	SLV 6	18	1587	4189	-80.89	5.58	-0.13
32	SLV 7	1	-986	2350	18.54	0.34	0.01
32	SLV 8	1	-986	2350	18.54	0.34	0.01
32	SLV 9	21	1738	3935	-78.06	4.15	-0.15
32	SLV 10	21	1738	3935	-78.06	4.15	-0.15
32	SLV 11	5	-836	2096	21.37	-1.09	0
32	SLV 12	5	-836	2096	21.37	-1.09	0
32	SLV 13	20	1013	2995	-39.95	0.64	-0.11
32	SLV 14	20	1013	2995	-39.95	0.64	-0.11
32	SLV 15	15	241	2443	-10.12	-0.93	-0.06
32	SLV 16	15	241	2443	-10.12	-0.93	-0.06
33	SLU 1	-8	1022	4715	-42.55	-3.39	0.17
33	SLU 2	-8	937	4573	-38.17	-3.47	0.17
33	SLU 3	-9	1045	4793	-43.43	-3.48	0.18
33	SLU 4	-9	994	4708	-40.81	-3.52	0.18
33	SLU 5	-9	950	4625	-38.69	-3.52	0.18
33	SLU 6	-9	1058	4844	-43.96	-3.53	0.18
33	SLU 7	-9	1007	4759	-41.33	-3.57	0.18
33	SLU 8	-9	1049	4817	-43.6	-3.5	0.18
33	SLU 9	-9	998	4732	-40.97	-3.54	0.18
33	SLU 10	-10	1109	5201	-45.05	-4.11	0.22
33	SLU 11	-10	1217	5420	-50.31	-4.11	0.22
33	SLU 12	-10	1165	5336	-47.68	-4.16	0.22
33	SLU 13	-10	1122	5252	-45.57	-4.16	0.22
33	SLU 14	-10	1230	5472	-50.83	-4.17	0.22
33	SLU 15	-10	1179	5387	-48.21	-4.21	0.23
33	SLU 16	-10	1221	5444	-50.47	-4.14	0.22

Nodo	Cont.	Reazione a traslazione			Reazione a rotazione		
Ind.	N.br.	x	y	z	x	y	z
33	SLU 17	-10	1170	5360	-47.85	-4.18	0.22
33	SLU 18	-11	1268	5611	-52.37	-4.3	0.24
33	SLU 19	-11	1217	5526	-49.74	-4.35	0.24
33	SLU 20	-11	1281	5662	-52.9	-4.36	0.24
33	SLU 21	-11	1230	5577	-50.27	-4.4	0.24
33	SLU 22	-10	1155	5189	-47.84	-3.91	0.2
33	SLU 23	-10	1069	5048	-43.46	-3.98	0.2
33	SLU 24	-10	1177	5267	-48.73	-3.99	0.21
33	SLU 25	-10	1126	5182	-46.1	-4.04	0.21
33	SLU 26	-10	1083	5099	-43.99	-4.03	0.21
33	SLU 27	-10	1191	5318	-49.25	-4.04	0.21
33	SLU 28	-10	1140	5234	-46.62	-4.09	0.21
33	SLU 29	-10	1182	5291	-48.89	-4.01	0.21
33	SLU 30	-10	1131	5206	-46.26	-4.06	0.21
33	SLU 31	-11	1241	5675	-50.34	-4.62	0.25
33	SLU 32	-11	1349	5894	-55.6	-4.63	0.25
33	SLU 33	-12	1298	5810	-52.98	-4.67	0.25
33	SLU 34	-12	1255	5726	-50.86	-4.67	0.25
33	SLU 35	-12	1363	5946	-56.13	-4.68	0.25
33	SLU 36	-12	1312	5861	-53.5	-4.73	0.25
33	SLU 37	-11	1354	5919	-55.77	-4.65	0.25
33	SLU 38	-12	1303	5834	-53.14	-4.7	0.25
33	SLU 39	-12	1400	6085	-57.67	-4.82	0.26
33	SLU 40	-12	1349	6000	-55.04	-4.86	0.27
33	SLU 41	-12	1414	6136	-58.19	-4.87	0.27
33	SLU 42	-12	1363	6052	-55.56	-4.92	0.27
33	SLU 43	-10	1283	5966	-53.5	-4.23	0.22
33	SLU 44	-11	1198	5825	-49.12	-4.31	0.22
33	SLU 45	-11	1306	6045	-54.38	-4.32	0.22
33	SLU 46	-11	1255	5960	-51.76	-4.36	0.22
33	SLU 47	-11	1212	5876	-49.64	-4.36	0.22
33	SLU 48	-11	1319	6096	-54.91	-4.37	0.22
33	SLU 49	-11	1268	6011	-52.28	-4.42	0.22
33	SLU 50	-11	1310	6069	-54.55	-4.34	0.22
33	SLU 51	-11	1259	5984	-51.92	-4.39	0.22
33	SLU 52	-12	1370	6453	-56	-4.95	0.26
33	SLU 53	-12	1478	6672	-61.26	-4.96	0.26
33	SLU 54	-12	1427	6587	-58.63	-5	0.27
33	SLU 55	-12	1384	6504	-56.52	-5	0.26
33	SLU 56	-12	1491	6723	-61.78	-5.01	0.27
33	SLU 57	-13	1440	6639	-59.16	-5.05	0.27
33	SLU 58	-12	1482	6696	-61.42	-4.98	0.27
33	SLU 59	-12	1431	6612	-58.8	-5.02	0.27
33	SLU 60	-13	1529	6863	-63.32	-5.15	0.28
33	SLU 61	-13	1478	6778	-60.69	-5.19	0.28
33	SLU 62	-13	1542	6914	-63.85	-5.2	0.28
33	SLU 63	-13	1491	6829	-61.22	-5.24	0.28
33	SLU 64	-12	1416	6440	-58.79	-4.75	0.24
33	SLU 65	-12	1331	6299	-54.41	-4.82	0.25
33	SLU 66	-12	1438	6519	-59.68	-4.83	0.25
33	SLU 67	-12	1387	6434	-57.05	-4.88	0.25
33	SLU 68	-12	1344	6351	-54.94	-4.88	0.25
33	SLU 69	-12	1452	6570	-60.2	-4.89	0.25
33	SLU 70	-12	1401	6485	-57.57	-4.93	0.25
33	SLU 71	-12	1443	6543	-59.84	-4.85	0.25
33	SLU 72	-12	1392	6458	-57.21	-4.9	0.25
33	SLU 73	-13	1502	6927	-61.29	-5.46	0.29
33	SLU 74	-13	1610	7146	-66.55	-5.47	0.29
33	SLU 75	-14	1559	7062	-63.93	-5.52	0.29
33	SLU 76	-14	1516	6978	-61.81	-5.51	0.29
33	SLU 77	-14	1624	7197	-67.08	-5.52	0.3
33	SLU 78	-14	1573	7113	-64.45	-5.57	0.3
33	SLU 79	-14	1615	7170	-66.72	-5.49	0.29
33	SLU 80	-14	1564	7086	-64.09	-5.54	0.29
33	SLU 81	-14	1661	7337	-68.62	-5.66	0.31
33	SLU 82	-14	1610	7252	-65.99	-5.7	0.31
33	SLU 83	-14	1675	7388	-69.14	-5.71	0.31
33	SLU 84	-14	1624	7303	-66.51	-5.76	0.31
33	SLE RA 1	-9	1060	4850	-44.06	-3.54	0.18
33	SLE RA 2	-9	1003	4756	-41.14	-3.59	0.18
33	SLE RA 3	-9	1075	4902	-44.65	-3.59	0.18
33	SLE RA 4	-9	1041	4846	-42.9	-3.62	0.19
33	SLE RA 5	-9	1012	4790	-41.49	-3.62	0.18
33	SLE RA 6	-9	1084	4936	-45	-3.63	0.19
33	SLE RA 7	-9	1050	4880	-43.25	-3.66	0.19
33	SLE RA 8	-9	1078	4918	-44.76	-3.61	0.19
33	SLE RA 9	-9	1044	4862	-43.01	-3.64	0.19
33	SLE RA 10	-10	1118	5174	-45.73	-4.01	0.21
33	SLE RA 11	-10	1190	5320	-49.24	-4.02	0.21
33	SLE RA 12	-10	1156	5264	-47.48	-4.05	0.21
33	SLE RA 13	-10	1127	5208	-46.08	-4.05	0.21
33	SLE RA 14	-10	1199	5355	-49.59	-4.06	0.22
33	SLE RA 15	-10	1165	5298	-47.83	-4.09	0.22
33	SLE RA 16	-10	1193	5337	-49.35	-4.04	0.21
33	SLE RA 17	-10	1159	5280	-47.59	-4.07	0.22
33	SLE RA 18	-10	1224	5448	-50.61	-4.15	0.22
33	SLE RA 19	-10	1190	5391	-48.86	-4.18	0.22
33	SLE RA 20	-10	1233	5482	-50.96	-4.18	0.23
33	SLE RA 21	-10	1199	5425	-49.21	-4.21	0.23
33	SLE FR 1	-9	1060	4850	-44.06	-3.54	0.18

Nodo	Cont.	Reazione a traslazione			Reazione a rotazione		
Ind.	N.br.	x	y	z	x	y	z
33	SLE FR 2	-9	1049	4831	-43.48	-3.55	0.18
33	SLE FR 3	-9	1063	4864	-44.2	-3.55	0.18
33	SLE FR 4	-9	1098	5010	-45.44	-3.73	0.19
33	SLE FR 5	-9	1113	5043	-46.17	-3.74	0.19
33	SLE FR 6	-9	1142	5149	-47.34	-3.84	0.2
33	SLE QP 1	-9	1060	4850	-44.06	-3.54	0.18
33	SLE QP 2	-9	1109	5029	-46.03	-3.72	0.19
33	SLD 1	-5	1108	5098	-46.96	-2.31	0.37
33	SLD 2	-5	1108	5098	-46.96	-2.31	0.37
33	SLD 3	-2	693	4439	-26.64	-0.98	0.25
33	SLD 4	-2	693	4439	-26.64	-0.98	0.25
33	SLD 5	-13	1737	6050	-77.13	-5.31	0.43
33	SLD 6	-13	1737	6050	-77.13	-5.31	0.43
33	SLD 7	-2	356	3852	-9.39	-0.89	0.03
33	SLD 8	-2	356	3852	-9.39	-0.89	0.03
33	SLD 9	-17	1862	6207	-82.67	-6.56	0.36
33	SLD 10	-17	1862	6207	-82.67	-6.56	0.36
33	SLD 11	-5	481	4008	-14.93	-2.13	-0.04
33	SLD 12	-5	481	4008	-14.93	-2.13	-0.04
33	SLD 13	-17	1525	5620	-65.42	-6.46	0.14
33	SLD 14	-17	1525	5620	-65.42	-6.46	0.14
33	SLD 15	-13	1110	4960	-45.1	-5.13	0.02
33	SLD 16	-13	1110	4960	-45.1	-5.13	0.02
33	SLV 1	0	1108	5195	-48.26	-0.44	0.61
33	SLV 2	0	1108	5195	-48.26	-0.44	0.61
33	SLV 3	9	134	3644	-0.52	2.69	0.32
33	SLV 4	9	134	3644	-0.52	2.69	0.32
33	SLV 5	-19	2585	7432	-119.11	-7.48	0.75
33	SLV 6	-19	2585	7432	-119.11	-7.48	0.75
33	SLV 7	9	-660	2261	40.03	2.95	-0.2
33	SLV 8	9	-660	2261	40.03	2.95	-0.2
33	SLV 9	-27	2878	7798	-132.09	-10.39	0.59
33	SLV 10	-27	2878	7798	-132.09	-10.39	0.59
33	SLV 11	1	-367	2627	27.05	0.04	-0.36
33	SLV 12	1	-367	2627	27.05	0.04	-0.36
33	SLV 13	-27	2084	6415	-91.53	-10.13	0.06
33	SLV 14	-27	2084	6415	-91.53	-10.13	0.06
33	SLV 15	-19	1110	4864	-43.79	-7.01	-0.22
33	SLV 16	-19	1110	4864	-43.79	-7.01	-0.22
34	SLU 1	2	1082	4600	-35.77	2.27	0
34	SLU 2	2	991	4453	-32.43	2.36	0
34	SLU 3	2	1109	4676	-36.58	2.32	0
34	SLU 4	2	1054	4588	-34.58	2.37	0
34	SLU 5	2	1007	4502	-32.92	2.38	0
34	SLU 6	2	1126	4726	-37.08	2.34	0
34	SLU 7	2	1071	4637	-35.08	2.39	0
34	SLU 8	2	1116	4699	-36.75	2.32	0
34	SLU 9	2	1061	4611	-34.75	2.37	0
34	SLU 10	2	1141	5019	-37.3	2.7	0
34	SLU 11	2	1260	5243	-41.46	2.65	0
34	SLU 12	2	1205	5154	-39.45	2.71	0
34	SLU 13	2	1158	5069	-37.79	2.72	0
34	SLU 14	2	1276	5292	-41.95	2.68	0
34	SLU 15	2	1221	5204	-39.95	2.73	0
34	SLU 16	2	1266	5266	-41.62	2.65	0
34	SLU 17	2	1211	5178	-39.62	2.71	0
34	SLU 18	2	1298	5409	-42.72	2.75	0
34	SLU 19	2	1243	5321	-40.72	2.81	0
34	SLU 20	2	1314	5459	-43.22	2.77	0
34	SLU 21	2	1259	5371	-41.22	2.83	0
34	SLU 22	2	1205	5024	-39.66	2.58	0
34	SLU 23	2	1113	4877	-36.32	2.67	0
34	SLU 24	2	1231	5101	-40.48	2.63	0
34	SLU 25	2	1176	5012	-38.48	2.68	0
34	SLU 26	2	1129	4927	-36.82	2.69	0
34	SLU 27	2	1248	5150	-40.97	2.65	0
34	SLU 28	2	1193	5062	-38.97	2.7	0
34	SLU 29	2	1238	5124	-40.65	2.62	0
34	SLU 30	2	1183	5036	-38.65	2.68	0
34	SLU 31	2	1264	5444	-41.19	3.01	0
34	SLU 32	2	1382	5668	-45.35	2.96	0
34	SLU 33	2	1327	5579	-43.35	3.02	0
34	SLU 34	2	1280	5494	-41.69	3.03	0
34	SLU 35	2	1399	5717	-45.84	2.98	0
34	SLU 36	2	1344	5629	-43.84	3.04	0
34	SLU 37	2	1388	5691	-45.52	2.96	0
34	SLU 38	2	1333	5602	-43.52	3.01	0
34	SLU 39	2	1420	5834	-46.62	3.06	0
34	SLU 40	3	1365	5746	-44.62	3.11	0
34	SLU 41	3	1436	5884	-47.11	3.08	0
34	SLU 42	3	1381	5796	-45.11	3.14	0
34	SLU 43	2	1365	5834	-45.16	2.85	0
34	SLU 44	2	1274	5687	-41.82	2.94	0
34	SLU 45	2	1392	5910	-45.98	2.89	0
34	SLU 46	2	1337	5822	-43.98	2.95	0
34	SLU 47	2	1290	5736	-42.32	2.96	0
34	SLU 48	2	1409	5960	-46.47	2.92	0
34	SLU 49	2	1354	5871	-44.47	2.97	0
34	SLU 50	2	1398	5933	-46.15	2.89	0
34	SLU 51	2	1343	5845	-44.15	2.95	0

Nodo	Cont.	Reazione a traslazione			Reazione a rotazione		
Ind.	N.br.	x	y	z	x	y	z
34	SLU 52	3	1424	6254	-46.69	3.27	0
34	SLU 53	2	1543	6477	-50.85	3.23	0
34	SLU 54	3	1488	6389	-48.85	3.28	0
34	SLU 55	3	1441	6303	-47.19	3.3	0
34	SLU 56	2	1559	6527	-51.34	3.25	0
34	SLU 57	3	1504	6438	-49.34	3.31	0
34	SLU 58	2	1549	6500	-51.02	3.23	0
34	SLU 59	3	1494	6412	-49.02	3.28	0
34	SLU 60	3	1580	6644	-52.12	3.33	0
34	SLU 61	3	1525	6555	-50.12	3.38	-0.01
34	SLU 62	3	1597	6693	-52.61	3.35	-0.01
34	SLU 63	3	1542	6605	-50.61	3.4	-0.01
34	SLU 64	2	1487	6259	-49.06	3.16	0
34	SLU 65	2	1396	6112	-45.72	3.25	0
34	SLU 66	2	1514	6335	-49.87	3.2	0
34	SLU 67	2	1459	6247	-47.87	3.26	0
34	SLU 68	2	1412	6161	-46.21	3.27	0
34	SLU 69	2	1531	6385	-50.37	3.22	0
34	SLU 70	2	1476	6296	-48.37	3.28	0
34	SLU 71	2	1520	6358	-50.04	3.2	0
34	SLU 72	2	1466	6270	-48.04	3.25	0
34	SLU 73	3	1546	6678	-50.59	3.58	-0.01
34	SLU 74	3	1665	6902	-54.74	3.54	-0.01
34	SLU 75	3	1610	6814	-52.74	3.59	-0.01
34	SLU 76	3	1563	6728	-51.08	3.6	-0.01
34	SLU 77	3	1681	6951	-55.24	3.56	-0.01
34	SLU 78	3	1626	6863	-53.24	3.61	-0.01
34	SLU 79	3	1671	6925	-54.91	3.54	-0.01
34	SLU 80	3	1616	6837	-52.91	3.59	-0.01
34	SLU 81	3	1703	7068	-56.01	3.64	-0.01
34	SLU 82	3	1648	6980	-54.01	3.69	-0.01
34	SLU 83	3	1719	7118	-56.51	3.66	-0.01
34	SLU 84	3	1664	7030	-54.51	3.71	-0.01
34	SLE RA 1	2	1117	4721	-36.88	2.36	0
34	SLE RA 2	2	1056	4623	-34.65	2.42	0
34	SLE RA 3	2	1135	4772	-37.42	2.39	0
34	SLE RA 4	2	1098	4713	-36.09	2.43	0
34	SLE RA 5	2	1067	4656	-34.98	2.43	0
34	SLE RA 6	2	1146	4805	-37.75	2.41	0
34	SLE RA 7	2	1110	4746	-36.42	2.44	0
34	SLE RA 8	2	1139	4787	-37.54	2.39	0
34	SLE RA 9	2	1103	4728	-36.2	2.43	0
34	SLE RA 10	2	1157	5001	-37.9	2.64	0
34	SLE RA 11	2	1236	5150	-40.67	2.61	0
34	SLE RA 12	2	1199	5091	-39.34	2.65	0
34	SLE RA 13	2	1168	5034	-38.23	2.66	0
34	SLE RA 14	2	1247	5183	-41	2.63	0
34	SLE RA 15	2	1210	5124	-39.67	2.67	0
34	SLE RA 16	2	1240	5165	-40.78	2.61	0
34	SLE RA 17	2	1203	5106	-39.45	2.65	0
34	SLE RA 18	2	1261	5261	-41.52	2.68	0
34	SLE RA 19	2	1224	5202	-40.18	2.72	0
34	SLE RA 20	2	1272	5294	-41.85	2.69	0
34	SLE RA 21	2	1235	5235	-40.51	2.73	0
34	SLE FR 1	2	1117	4721	-36.88	2.36	0
34	SLE FR 2	2	1105	4701	-36.43	2.37	0
34	SLE FR 3	2	1122	4734	-37.01	2.37	0
34	SLE FR 4	2	1148	4863	-37.83	2.47	0
34	SLE FR 5	2	1165	4896	-38.4	2.46	0
34	SLE FR 6	2	1189	4991	-39.2	2.52	0
34	SLE QP 1	2	1117	4721	-36.88	2.36	0
34	SLE QP 2	2	1160	4883	-38.27	2.46	0
34	SLD 1	9	1529	5397	-51.47	7.02	-0.01
34	SLD 2	9	1529	5397	-51.47	7.02	-0.01
34	SLD 3	3	1128	4730	-36.96	3.81	-0.01
34	SLD 4	3	1128	4730	-36.96	3.81	-0.01
34	SLD 5	14	1879	6049	-64.23	8.7	-0.01
34	SLD 6	14	1879	6049	-64.23	8.7	-0.01
34	SLD 7	-8	543	3826	-15.88	-2.01	0
34	SLD 8	-8	543	3826	-15.88	-2.01	0
34	SLD 9	12	1778	5940	-60.66	6.92	0
34	SLD 10	12	1778	5940	-60.66	6.92	0
34	SLD 11	-11	442	3717	-12.31	-3.78	0
34	SLD 12	-11	442	3717	-12.31	-3.78	0
34	SLD 13	1	1193	5036	-39.58	1.1	0
34	SLD 14	1	1193	5036	-39.58	1.1	0
34	SLD 15	-6	792	4369	-25.07	-2.11	0
34	SLD 16	-6	792	4369	-25.07	-2.11	0
34	SLV 1	20	2025	6091	-69.25	13.13	-0.02
34	SLV 2	20	2025	6091	-69.25	13.13	-0.02
34	SLV 3	4	1083	4522	-35.17	5.62	-0.02
34	SLV 4	4	1083	4522	-35.17	5.62	-0.02
34	SLV 5	31	2848	7626	-99.26	17.06	-0.01
34	SLV 6	31	2848	7626	-99.26	17.06	-0.01
34	SLV 7	-21	-291	2394	14.35	-8	-0.01
34	SLV 8	-21	-291	2394	14.35	-8	-0.01
34	SLV 9	25	2612	7372	-90.89	12.91	0
34	SLV 10	25	2612	7372	-90.89	12.91	0
34	SLV 11	-27	-527	2140	22.71	-12.15	0
34	SLV 12	-27	-527	2140	22.71	-12.15	0

Nodo	Cont.	Reazione a traslazione			Reazione a rotazione		
Ind.	N.br.	x	y	z	x	y	z
34	SLV 13	0	1238	5244	-41.37	-0.7	0.01
34	SLV 14	0	1238	5244	-41.37	-0.7	0.01
34	SLV 15	-16	296	3675	-7.29	-8.22	0.01
34	SLV 16	-16	296	3675	-7.29	-8.22	0.01
35	SLU 1	0	269	2907	-24.05	-0.27	0.01
35	SLU 2	-1	178	2927	-20.2	-0.34	0.01
35	SLU 3	0	273	2946	-24.55	-0.29	0.01
35	SLU 4	-1	218	2958	-22.24	-0.33	0.01
35	SLU 5	-1	177	2953	-20.42	-0.36	0.01
35	SLU 6	0	272	2971	-24.76	-0.31	0.01
35	SLU 7	-1	217	2983	-22.46	-0.35	0.01
35	SLU 8	0	268	2958	-24.48	-0.31	0.01
35	SLU 9	-1	213	2970	-22.17	-0.35	0.01
35	SLU 10	-1	222	3265	-23.61	-0.35	0.01
35	SLU 11	0	317	3283	-27.96	-0.3	0.01
35	SLU 12	-1	262	3295	-25.65	-0.34	0.01
35	SLU 13	-1	221	3290	-23.83	-0.37	0.01
35	SLU 14	-1	316	3308	-28.18	-0.32	0.01
35	SLU 15	-1	261	3320	-25.87	-0.36	0.01
35	SLU 16	-1	312	3295	-27.9	-0.32	0.01
35	SLU 17	-1	257	3307	-25.59	-0.36	0.01
35	SLU 18	0	332	3389	-28.93	-0.28	0.01
35	SLU 19	-1	277	3401	-26.62	-0.33	0.01
35	SLU 20	0	331	3415	-29.14	-0.31	0.01
35	SLU 21	-1	276	3427	-26.83	-0.35	0.01
35	SLU 22	0	307	3197	-27.07	-0.27	0.01
35	SLU 23	-1	215	3217	-23.22	-0.34	0.01
35	SLU 24	0	310	3235	-27.57	-0.29	0.01
35	SLU 25	-1	255	3247	-25.26	-0.33	0.01
35	SLU 26	-1	214	3242	-23.43	-0.36	0.01
35	SLU 27	-1	310	3261	-27.78	-0.31	0.01
35	SLU 28	-1	255	3273	-25.47	-0.35	0.01
35	SLU 29	-1	305	3248	-27.5	-0.31	0.01
35	SLU 30	-1	250	3260	-25.19	-0.35	0.01
35	SLU 31	-1	259	3554	-26.63	-0.35	0.01
35	SLU 32	-1	354	3573	-30.98	-0.3	0.01
35	SLU 33	-1	299	3585	-28.67	-0.34	0.01
35	SLU 34	-1	258	3580	-26.85	-0.37	0.01
35	SLU 35	-1	353	3598	-31.2	-0.32	0.01
35	SLU 36	-1	298	3610	-28.89	-0.36	0.01
35	SLU 37	-1	349	3585	-30.91	-0.32	0.01
35	SLU 38	-1	294	3597	-28.6	-0.36	0.01
35	SLU 39	0	369	3679	-31.94	-0.29	0.01
35	SLU 40	-1	314	3691	-29.63	-0.33	0.01
35	SLU 41	-1	369	3704	-32.16	-0.31	0.01
35	SLU 42	-1	314	3716	-29.85	-0.35	0.01
35	SLU 43	-1	338	3680	-30.23	-0.35	0.02
35	SLU 44	-1	246	3700	-26.38	-0.41	0.02
35	SLU 45	-1	341	3718	-30.73	-0.37	0.02
35	SLU 46	-1	286	3730	-28.42	-0.41	0.02
35	SLU 47	-1	245	3725	-26.6	-0.44	0.02
35	SLU 48	-1	340	3744	-30.95	-0.39	0.02
35	SLU 49	-1	285	3756	-28.64	-0.43	0.02
35	SLU 50	-1	336	3731	-30.66	-0.39	0.02
35	SLU 51	-1	281	3743	-28.35	-0.43	0.02
35	SLU 52	-1	290	4037	-29.8	-0.43	0.02
35	SLU 53	-1	385	4056	-34.14	-0.38	0.02
35	SLU 54	-1	330	4068	-31.83	-0.42	0.02
35	SLU 55	-1	289	4063	-30.01	-0.45	0.02
35	SLU 56	-1	384	4081	-34.36	-0.4	0.02
35	SLU 57	-1	329	4093	-32.05	-0.44	0.02
35	SLU 58	-1	380	4068	-34.08	-0.4	0.02
35	SLU 59	-1	325	4080	-31.77	-0.44	0.02
35	SLU 60	-1	400	4162	-35.11	-0.36	0.02
35	SLU 61	-1	345	4174	-32.8	-0.41	0.02
35	SLU 62	-1	399	4187	-35.32	-0.38	0.02
35	SLU 63	-1	344	4199	-33.01	-0.43	0.02
35	SLU 64	-1	375	3970	-33.25	-0.35	0.02
35	SLU 65	-1	283	3990	-29.4	-0.42	0.02
35	SLU 66	-1	379	4008	-33.75	-0.37	0.02
35	SLU 67	-1	324	4020	-31.44	-0.41	0.02
35	SLU 68	-1	282	4015	-29.61	-0.44	0.02
35	SLU 69	-1	378	4034	-33.96	-0.39	0.02
35	SLU 70	-1	323	4046	-31.65	-0.43	0.02
35	SLU 71	-1	373	4021	-33.68	-0.39	0.02
35	SLU 72	-1	318	4033	-31.37	-0.43	0.02
35	SLU 73	-1	327	4327	-32.81	-0.43	0.02
35	SLU 74	-1	422	4346	-37.16	-0.38	0.02
35	SLU 75	-1	367	4358	-34.85	-0.42	0.02
35	SLU 76	-1	326	4353	-33.03	-0.45	0.02
35	SLU 77	-1	422	4371	-37.38	-0.4	0.02
35	SLU 78	-1	367	4383	-35.07	-0.44	0.02
35	SLU 79	-1	417	4358	-37.09	-0.4	0.02
35	SLU 80	-1	362	4370	-34.78	-0.44	0.02
35	SLU 81	-1	437	4452	-38.12	-0.37	0.02
35	SLU 82	-1	382	4464	-35.82	-0.41	0.02
35	SLU 83	-1	437	4477	-38.34	-0.39	0.02
35	SLU 84	-1	382	4489	-36.03	-0.43	0.02
35	SLE RA 1	0	280	2990	-24.91	-0.27	0.01
35	SLE RA 2	-1	219	3003	-22.35	-0.31	0.01

Nodo	Cont.	Reazione a traslazione			Reazione a rotazione		
Ind.	N.br.	x	y	z	x	y	z
35	SLE RA 3	0	283	3016	-25.24	-0.28	0.01
35	SLE RA 4	-1	246	3024	-23.7	-0.31	0.01
35	SLE RA 5	-1	219	3020	-22.49	-0.33	0.01
35	SLE RA 6	0	282	3033	-25.39	-0.29	0.01
35	SLE RA 7	-1	245	3041	-23.85	-0.32	0.01
35	SLE RA 8	0	279	3024	-25.2	-0.29	0.01
35	SLE RA 9	-1	242	3032	-23.66	-0.32	0.01
35	SLE RA 10	-1	248	3228	-24.62	-0.32	0.01
35	SLE RA 11	0	312	3241	-27.52	-0.29	0.01
35	SLE RA 12	-1	275	3249	-25.98	-0.32	0.01
35	SLE RA 13	-1	248	3245	-24.77	-0.34	0.01
35	SLE RA 14	0	311	3257	-27.66	-0.3	0.01
35	SLE RA 15	-1	275	3265	-26.12	-0.33	0.01
35	SLE RA 16	0	308	3249	-27.48	-0.3	0.01
35	SLE RA 17	-1	272	3257	-25.94	-0.33	0.01
35	SLE RA 18	0	322	3311	-28.16	-0.28	0.01
35	SLE RA 19	-1	285	3319	-26.62	-0.31	0.01
35	SLE RA 20	0	321	3328	-28.31	-0.29	0.01
35	SLE RA 21	-1	285	3336	-26.77	-0.32	0.01
35	SLE FR 1	0	280	2990	-24.91	-0.27	0.01
35	SLE FR 2	0	268	2993	-24.4	-0.28	0.01
35	SLE FR 3	0	280	2997	-24.97	-0.27	0.01
35	SLE FR 4	-1	280	3089	-25.37	-0.28	0.01
35	SLE FR 5	0	292	3093	-25.94	-0.28	0.01
35	SLE FR 6	0	301	3151	-26.54	-0.27	0.01
35	SLE QP 1	0	280	2990	-24.91	-0.27	0.01
35	SLE QP 2	0	293	3086	-25.89	-0.27	0.01
35	SLD 1	0	566	3081	-35.33	0.37	0.01
35	SLD 2	0	566	3081	-35.33	0.37	0.01
35	SLD 3	3	267	2878	-22.75	1.23	0
35	SLD 4	3	267	2878	-22.75	1.23	0
35	SLD 5	-4	827	3392	-47.81	-1.39	0.03
35	SLD 6	-4	827	3392	-47.81	-1.39	0.03
35	SLD 7	4	-167	2716	-5.86	1.49	0
35	SLD 8	4	-167	2716	-5.86	1.49	0
35	SLD 9	-5	752	3457	-45.92	-2.03	0.03
35	SLD 10	-5	752	3457	-45.92	-2.03	0.03
35	SLD 11	3	-242	2780	-3.97	0.85	0
35	SLD 12	3	-242	2780	-3.97	0.85	0
35	SLD 13	-4	318	3295	-29.03	-1.77	0.02
35	SLD 14	-4	318	3295	-29.03	-1.77	0.02
35	SLD 15	-1	20	3092	-16.44	-0.91	0.01
35	SLD 16	-1	20	3092	-16.44	-0.91	0.01
35	SLV 1	1	942	3070	-48.52	1.2	0.01
35	SLV 2	1	942	3070	-48.52	1.2	0.01
35	SLV 3	7	229	2594	-18.43	3.27	-0.01
35	SLV 4	7	229	2594	-18.43	3.27	-0.01
35	SLV 5	-9	1568	3803	-78.3	-2.97	0.05
35	SLV 6	-9	1568	3803	-78.3	-2.97	0.05
35	SLV 7	11	-807	2217	21.97	3.93	-0.03
35	SLV 8	11	-807	2217	21.97	3.93	-0.03
35	SLV 9	-12	1392	3956	-73.75	-4.47	0.05
35	SLV 10	-12	1392	3956	-73.75	-4.47	0.05
35	SLV 11	8	-982	2370	26.53	2.43	-0.02
35	SLV 12	8	-982	2370	26.53	2.43	-0.02
35	SLV 13	-8	356	3579	-33.34	-3.81	0.04
35	SLV 14	-8	356	3579	-33.34	-3.81	0.04
35	SLV 15	-2	-356	3103	-3.26	-1.74	0.01
35	SLV 16	-2	-356	3103	-3.26	-1.74	0.01
36	SLU 1	-26	-359	3483	33	-4.78	1.38
36	SLU 2	-24	-468	3650	39.28	-4.8	1.26
36	SLU 3	-26	-367	3537	33.76	-4.85	1.39
36	SLU 4	-25	-432	3637	37.52	-4.86	1.33
36	SLU 5	-24	-474	3681	39.78	-4.83	1.27
36	SLU 6	-26	-373	3568	34.26	-4.89	1.4
36	SLU 7	-25	-438	3668	38.02	-4.9	1.33
36	SLU 8	-26	-372	3546	34.01	-4.86	1.39
36	SLU 9	-25	-437	3645	37.78	-4.86	1.32
36	SLU 10	-27	-511	4144	43.85	-5.49	1.48
36	SLU 11	-30	-410	4031	38.33	-5.55	1.61
36	SLU 12	-29	-475	4131	42.09	-5.56	1.54
36	SLU 13	-28	-517	4176	44.35	-5.53	1.48
36	SLU 14	-30	-417	4063	38.83	-5.59	1.62
36	SLU 15	-29	-482	4162	42.6	-5.6	1.55
36	SLU 16	-30	-415	4040	38.59	-5.55	1.61
36	SLU 17	-29	-480	4140	42.35	-5.56	1.54
36	SLU 18	-31	-421	4190	39.54	-5.78	1.68
36	SLU 19	-30	-486	4290	43.3	-5.79	1.62
36	SLU 20	-31	-428	4221	40.04	-5.82	1.69
36	SLU 21	-30	-493	4321	43.81	-5.82	1.62
36	SLU 22	-29	-398	3905	37.11	-5.39	1.56
36	SLU 23	-27	-507	4071	43.38	-5.41	1.44
36	SLU 24	-29	-406	3958	37.86	-5.47	1.58
36	SLU 25	-28	-471	4058	41.63	-5.47	1.51
36	SLU 26	-27	-513	4103	43.89	-5.45	1.45
36	SLU 27	-29	-412	3989	38.37	-5.5	1.58
36	SLU 28	-28	-477	4089	42.13	-5.51	1.51
36	SLU 29	-29	-411	3967	38.12	-5.47	1.57
36	SLU 30	-28	-476	4067	41.89	-5.48	1.5
36	SLU 31	-31	-550	4566	47.96	-6.11	1.66

Nodo	Cont.	Reazione a traslazione			Reazione a rotazione		
Ind.	N.br.	x	y	z	x	y	z
36	SLU 32	-33	-449	4453	42.44	-6.16	1.79
36	SLU 33	-32	-514	4553	46.2	-6.17	1.72
36	SLU 34	-31	-556	4597	48.46	-6.14	1.67
36	SLU 35	-33	-455	4484	42.94	-6.2	1.8
36	SLU 36	-32	-521	4584	46.71	-6.21	1.73
36	SLU 37	-33	-454	4462	42.7	-6.17	1.79
36	SLU 38	-32	-519	4562	46.46	-6.18	1.72
36	SLU 39	-34	-460	4611	43.65	-6.39	1.87
36	SLU 40	-33	-525	4711	47.41	-6.4	1.8
36	SLU 41	-35	-467	4643	44.15	-6.43	1.87
36	SLU 42	-33	-532	4743	47.91	-6.44	1.8
36	SLU 43	-32	-454	4384	41.49	-6.01	1.73
36	SLU 44	-30	-562	4550	47.77	-6.02	1.61
36	SLU 45	-33	-461	4437	42.25	-6.08	1.74
36	SLU 46	-31	-526	4537	46.01	-6.09	1.68
36	SLU 47	-30	-568	4581	48.27	-6.06	1.62
36	SLU 48	-33	-467	4468	42.75	-6.11	1.75
36	SLU 49	-32	-533	4568	46.52	-6.12	1.68
36	SLU 50	-33	-466	4446	42.5	-6.08	1.74
36	SLU 51	-31	-531	4546	46.27	-6.09	1.67
36	SLU 52	-34	-606	5045	52.34	-6.72	1.83
36	SLU 53	-36	-505	4932	46.82	-6.78	1.96
36	SLU 54	-35	-570	5032	50.59	-6.78	1.89
36	SLU 55	-34	-612	5076	52.85	-6.76	1.83
36	SLU 56	-37	-511	4963	47.33	-6.81	1.97
36	SLU 57	-35	-576	5063	51.09	-6.82	1.9
36	SLU 58	-36	-510	4941	47.08	-6.78	1.96
36	SLU 59	-35	-575	5041	50.84	-6.79	1.89
36	SLU 60	-38	-516	5090	48.03	-7	2.04
36	SLU 61	-36	-581	5190	51.79	-7.01	1.97
36	SLU 62	-38	-522	5122	48.53	-7.04	2.04
36	SLU 63	-37	-587	5221	52.3	-7.05	1.97
36	SLU 64	-36	-493	4805	45.6	-6.62	1.91
36	SLU 65	-33	-601	4972	51.88	-6.63	1.79
36	SLU 66	-36	-500	4859	46.36	-6.69	1.93
36	SLU 67	-35	-565	4959	50.12	-6.7	1.86
36	SLU 68	-34	-607	5003	52.38	-6.67	1.8
36	SLU 69	-36	-506	4890	46.86	-6.73	1.93
36	SLU 70	-35	-571	4990	50.63	-6.74	1.86
36	SLU 71	-36	-505	4868	46.61	-6.69	1.92
36	SLU 72	-35	-570	4967	50.38	-6.7	1.85
36	SLU 73	-37	-645	5466	56.45	-7.33	2.01
36	SLU 74	-40	-544	5353	50.93	-7.39	2.14
36	SLU 75	-38	-609	5453	54.69	-7.4	2.07
36	SLU 76	-37	-651	5498	56.96	-7.37	2.02
36	SLU 77	-40	-550	5385	51.44	-7.43	2.15
36	SLU 78	-39	-615	5484	55.2	-7.43	2.08
36	SLU 79	-40	-549	5362	51.19	-7.39	2.14
36	SLU 80	-38	-614	5462	54.95	-7.4	2.07
36	SLU 81	-41	-555	5512	52.14	-7.62	2.22
36	SLU 82	-40	-620	5612	55.9	-7.63	2.15
36	SLU 83	-41	-561	5543	52.64	-7.65	2.22
36	SLU 84	-40	-626	5643	56.41	-7.66	2.15
36	SLE RA 1	-27	-370	3604	34.18	-4.96	1.43
36	SLE RA 2	-25	-443	3715	38.36	-4.97	1.35
36	SLE RA 3	-27	-375	3639	34.68	-5	1.44
36	SLE RA 4	-26	-419	3706	37.19	-5.01	1.39
36	SLE RA 5	-25	-447	3736	38.69	-4.99	1.36
36	SLE RA 6	-27	-380	3660	35.01	-5.03	1.44
36	SLE RA 7	-26	-423	3727	37.52	-5.03	1.4
36	SLE RA 8	-27	-379	3645	34.85	-5.01	1.44
36	SLE RA 9	-26	-422	3712	37.36	-5.01	1.39
36	SLE RA 10	-28	-472	4045	41.41	-5.43	1.5
36	SLE RA 11	-29	-404	3969	37.73	-5.47	1.58
36	SLE RA 12	-29	-448	4036	40.24	-5.48	1.54
36	SLE RA 13	-28	-476	4065	41.74	-5.46	1.5
36	SLE RA 14	-29	-409	3990	38.06	-5.49	1.59
36	SLE RA 15	-29	-452	4057	40.57	-5.5	1.54
36	SLE RA 16	-29	-408	3975	37.9	-5.47	1.58
36	SLE RA 17	-29	-451	4042	40.41	-5.48	1.53
36	SLE RA 18	-30	-412	4075	38.53	-5.62	1.63
36	SLE RA 19	-29	-455	4141	41.04	-5.63	1.59
36	SLE RA 20	-30	-416	4096	38.87	-5.65	1.64
36	SLE RA 21	-29	-459	4162	41.38	-5.65	1.59
36	SLE FR 1	-27	-370	3604	34.18	-4.96	1.43
36	SLE FR 2	-26	-385	3626	35.01	-4.96	1.41
36	SLE FR 3	-27	-372	3612	34.31	-4.97	1.43
36	SLE FR 4	-27	-397	3767	36.32	-5.16	1.47
36	SLE FR 5	-28	-384	3753	35.62	-5.17	1.49
36	SLE FR 6	-28	-391	3839	36.35	-5.29	1.53
36	SLE QP 1	-27	-370	3604	34.18	-4.96	1.43
36	SLE QP 2	-28	-383	3745	35.48	-5.16	1.49
36	SLD 1	-23	-352	3624	49.49	-3.39	1.34
36	SLD 2	-23	-352	3624	49.49	-3.39	1.34
36	SLD 3	-13	-701	3295	34.15	-2.59	0.72
36	SLD 4	-13	-701	3295	34.15	-2.59	0.72
36	SLD 5	-42	156	4207	62.96	-5.84	2.38
36	SLD 6	-42	156	4207	62.96	-5.84	2.38
36	SLD 7	-8	-1008	3112	11.81	-3.17	0.32
36	SLD 8	-8	-1008	3112	11.81	-3.17	0.32

Nodo	Cont.	Reazione a traslazione			Reazione a rotazione		
Ind.	N.br.	x	y	z	x	y	z
36	SLD 9	-48	242	4378	59.16	-7.14	2.66
36	SLD 10	-48	242	4378	59.16	-7.14	2.66
36	SLD 11	-14	-922	3283	8	-4.47	0.6
36	SLD 12	-14	-922	3283	8	-4.47	0.6
36	SLD 13	-43	-65	4195	36.82	-7.73	2.26
36	SLD 14	-43	-65	4195	36.82	-7.73	2.26
36	SLD 15	-32	-414	3866	21.47	-6.92	1.64
36	SLD 16	-32	-414	3866	21.47	-6.92	1.64
36	SLV 1	-17	-313	3460	69.54	-1.03	1.15
36	SLV 2	-17	-313	3460	69.54	-1.03	1.15
36	SLV 3	7	-1143	2684	32.66	0.85	-0.32
36	SLV 4	7	-1143	2684	32.66	0.85	-0.32
36	SLV 5	-61	897	4838	101.64	-6.78	3.62
36	SLV 6	-61	897	4838	101.64	-6.78	3.62
36	SLV 7	20	-1870	2248	-21.31	-0.49	-1.29
36	SLV 8	20	-1870	2248	-21.31	-0.49	-1.29
36	SLV 9	-75	1104	5242	92.27	-9.82	4.27
36	SLV 10	-75	1104	5242	92.27	-9.82	4.27
36	SLV 11	6	-1662	2652	-30.68	-3.53	-0.64
36	SLV 12	6	-1662	2652	-30.68	-3.53	-0.64
36	SLV 13	-63	378	4807	38.3	-11.17	3.3
36	SLV 14	-63	378	4807	38.3	-11.17	3.3
36	SLV 15	-38	-452	4030	1.42	-9.28	1.83
36	SLV 16	-38	-452	4030	1.42	-9.28	1.83
37	SLU 1	-21	836	5228	-24.61	-5.7	0.54
37	SLU 2	-21	756	5128	-20.74	-5.79	0.54
37	SLU 3	-21	855	5322	-25.18	-5.83	0.54
37	SLU 4	-22	808	5262	-22.86	-5.88	0.55
37	SLU 5	-22	767	5189	-21.08	-5.87	0.54
37	SLU 6	-22	867	5383	-25.52	-5.91	0.55
37	SLU 7	-22	819	5323	-23.19	-5.96	0.55
37	SLU 8	-22	858	5350	-25.28	-5.86	0.54
37	SLU 9	-22	811	5290	-22.96	-5.91	0.55
37	SLU 10	-25	900	5864	-24.68	-6.76	0.65
37	SLU 11	-25	999	6058	-29.12	-6.8	0.66
37	SLU 12	-25	951	5998	-26.8	-6.85	0.66
37	SLU 13	-25	911	5925	-25.02	-6.83	0.66
37	SLU 14	-25	1010	6119	-29.46	-6.88	0.66
37	SLU 15	-25	962	6059	-27.13	-6.93	0.66
37	SLU 16	-25	1002	6086	-29.22	-6.83	0.66
37	SLU 17	-25	954	6026	-26.9	-6.88	0.66
37	SLU 18	-26	1042	6279	-30.24	-7.09	0.7
37	SLU 19	-26	994	6219	-27.92	-7.14	0.7
37	SLU 20	-26	1053	6340	-30.57	-7.17	0.7
37	SLU 21	-26	1005	6280	-28.25	-7.22	0.71
37	SLU 22	-24	953	5798	-27.48	-6.57	0.62
37	SLU 23	-24	873	5698	-23.61	-6.65	0.62
37	SLU 24	-25	972	5892	-28.05	-6.69	0.63
37	SLU 25	-25	925	5832	-25.73	-6.74	0.63
37	SLU 26	-25	885	5759	-23.95	-6.73	0.63
37	SLU 27	-25	984	5953	-28.39	-6.77	0.63
37	SLU 28	-25	936	5893	-26.07	-6.82	0.63
37	SLU 29	-25	976	5920	-28.16	-6.72	0.63
37	SLU 30	-25	928	5860	-25.83	-6.77	0.63
37	SLU 31	-28	1017	6434	-27.55	-7.62	0.74
37	SLU 32	-28	1116	6628	-31.99	-7.66	0.74
37	SLU 33	-28	1068	6568	-29.67	-7.71	0.74
37	SLU 34	-28	1028	6495	-27.89	-7.7	0.74
37	SLU 35	-28	1127	6689	-32.33	-7.74	0.75
37	SLU 36	-28	1080	6629	-30.01	-7.79	0.75
37	SLU 37	-28	1119	6656	-32.1	-7.69	0.74
37	SLU 38	-28	1071	6596	-29.77	-7.74	0.75
37	SLU 39	-29	1159	6849	-33.11	-7.95	0.78
37	SLU 40	-29	1111	6789	-30.79	-8	0.79
37	SLU 41	-29	1170	6910	-33.45	-8.03	0.79
37	SLU 42	-30	1122	6850	-31.13	-8.08	0.79
37	SLU 43	-26	1047	6601	-31.01	-7.12	0.67
37	SLU 44	-26	967	6501	-27.14	-7.2	0.67
37	SLU 45	-27	1066	6695	-31.58	-7.25	0.67
37	SLU 46	-27	1018	6635	-29.26	-7.3	0.68
37	SLU 47	-27	978	6562	-27.47	-7.28	0.67
37	SLU 48	-27	1077	6756	-31.91	-7.33	0.68
37	SLU 49	-27	1029	6696	-29.59	-7.38	0.68
37	SLU 50	-27	1069	6723	-31.68	-7.28	0.68
37	SLU 51	-27	1021	6663	-29.36	-7.33	0.68
37	SLU 52	-30	1111	7237	-31.08	-8.17	0.78
37	SLU 53	-30	1210	7431	-35.52	-8.22	0.79
37	SLU 54	-30	1162	7371	-33.2	-8.27	0.79
37	SLU 55	-30	1122	7298	-31.41	-8.25	0.79
37	SLU 56	-30	1221	7492	-35.85	-8.29	0.79
37	SLU 57	-31	1173	7432	-33.53	-8.34	0.8
37	SLU 58	-30	1213	7459	-35.62	-8.24	0.79
37	SLU 59	-30	1165	7399	-33.3	-8.29	0.79
37	SLU 60	-31	1252	7652	-36.64	-8.5	0.83
37	SLU 61	-31	1204	7592	-34.31	-8.55	0.83
37	SLU 62	-32	1263	7713	-36.97	-8.58	0.84
37	SLU 63	-32	1216	7653	-34.65	-8.63	0.84
37	SLU 64	-29	1164	7171	-33.88	-7.98	0.75
37	SLU 65	-30	1084	7071	-30.01	-8.06	0.75
37	SLU 66	-30	1183	7265	-34.45	-8.11	0.76

Nodo	Cont.	Reazione a traslazione			Reazione a rotazione		
Ind.	N.br.	x	y	z	x	y	z
37	SLU 67	-30	1135	7205	-32.13	-8.16	0.76
37	SLU 68	-30	1095	7132	-30.35	-8.14	0.76
37	SLU 69	-30	1194	7326	-34.79	-8.19	0.76
37	SLU 70	-30	1146	7266	-32.47	-8.24	0.77
37	SLU 71	-30	1186	7293	-34.55	-8.14	0.76
37	SLU 72	-30	1138	7233	-32.23	-8.19	0.76
37	SLU 73	-33	1228	7807	-33.95	-9.03	0.87
37	SLU 74	-33	1327	8001	-38.39	-9.08	0.87
37	SLU 75	-33	1279	7941	-36.07	-9.13	0.88
37	SLU 76	-33	1239	7868	-34.29	-9.11	0.87
37	SLU 77	-34	1338	8062	-38.73	-9.16	0.88
37	SLU 78	-34	1290	8002	-36.41	-9.21	0.88
37	SLU 79	-33	1330	8029	-38.49	-9.11	0.88
37	SLU 80	-34	1282	7969	-36.17	-9.16	0.88
37	SLU 81	-34	1369	8222	-39.51	-9.37	0.92
37	SLU 82	-34	1321	8162	-37.19	-9.41	0.92
37	SLU 83	-35	1381	8283	-39.85	-9.44	0.92
37	SLU 84	-35	1333	8223	-37.52	-9.49	0.92
37	SLE RA 1	-22	870	5391	-25.43	-5.95	0.56
37	SLE RA 2	-22	816	5324	-22.85	-6.01	0.56
37	SLE RA 3	-22	882	5454	-25.81	-6.04	0.56
37	SLE RA 4	-22	850	5414	-24.26	-6.07	0.57
37	SLE RA 5	-22	824	5365	-23.08	-6.06	0.56
37	SLE RA 6	-22	890	5494	-26.03	-6.09	0.57
37	SLE RA 7	-22	858	5454	-24.49	-6.12	0.57
37	SLE RA 8	-22	884	5472	-25.88	-6.05	0.57
37	SLE RA 9	-22	853	5432	-24.33	-6.09	0.57
37	SLE RA 10	-24	912	5815	-25.48	-6.65	0.64
37	SLE RA 11	-25	978	5944	-28.44	-6.68	0.64
37	SLE RA 12	-25	946	5904	-26.89	-6.71	0.64
37	SLE RA 13	-25	920	5855	-25.7	-6.7	0.64
37	SLE RA 14	-25	986	5985	-28.66	-6.73	0.64
37	SLE RA 15	-25	954	5945	-27.11	-6.77	0.65
37	SLE RA 16	-25	980	5963	-28.51	-6.7	0.64
37	SLE RA 17	-25	948	5923	-26.96	-6.73	0.64
37	SLE RA 18	-25	1007	6092	-29.18	-6.87	0.67
37	SLE RA 19	-25	975	6052	-27.64	-6.91	0.67
37	SLE RA 20	-25	1014	6132	-29.41	-6.92	0.67
37	SLE RA 21	-26	982	6092	-27.86	-6.96	0.67
37	SLE FR 1	-22	870	5391	-25.43	-5.95	0.56
37	SLE FR 2	-22	859	5377	-24.91	-5.96	0.56
37	SLE FR 3	-22	873	5407	-25.52	-5.97	0.56
37	SLE FR 4	-23	900	5588	-26.04	-6.24	0.59
37	SLE FR 5	-23	914	5617	-26.65	-6.25	0.59
37	SLE FR 6	-24	938	5741	-27.31	-6.41	0.61
37	SLE QP 1	-22	870	5391	-25.43	-5.95	0.56
37	SLE QP 2	-23	911	5601	-26.56	-6.23	0.59
37	SLD 1	-17	891	5490	-28.41	-4.29	0.43
37	SLD 2	-17	891	5490	-28.41	-4.29	0.43
37	SLD 3	-14	497	4947	-10.54	-3.27	0.4
37	SLD 4	-14	497	4947	-10.54	-3.27	0.4
37	SLD 5	-26	1502	6393	-54.22	-7.2	0.58
37	SLD 6	-26	1502	6393	-54.22	-7.2	0.58
37	SLD 7	-16	189	4580	5.36	-3.79	0.5
37	SLD 8	-16	189	4580	5.36	-3.79	0.5
37	SLD 9	-30	1632	6622	-58.47	-8.67	0.69
37	SLD 10	-30	1632	6622	-58.47	-8.67	0.69
37	SLD 11	-20	319	4809	1.11	-5.26	0.6
37	SLD 12	-20	319	4809	1.11	-5.26	0.6
37	SLD 13	-32	1324	6255	-42.58	-9.19	0.78
37	SLD 14	-32	1324	6255	-42.58	-9.19	0.78
37	SLD 15	-29	930	5711	-24.7	-8.16	0.76
37	SLD 16	-29	930	5711	-24.7	-8.16	0.76
37	SLV 1	-8	866	5347	-30.9	-1.72	0.2
37	SLV 2	-8	866	5347	-30.9	-1.72	0.2
37	SLV 3	-1	-59	4069	11.09	0.7	0.14
37	SLV 4	-1	-59	4069	11.09	0.7	0.14
37	SLV 5	-29	2299	7463	-91.54	-8.55	0.57
37	SLV 6	-29	2299	7463	-91.54	-8.55	0.57
37	SLV 7	-6	-782	3203	48.42	-0.48	0.37
37	SLV 8	-6	-782	3203	48.42	-0.48	0.37
37	SLV 9	-40	2603	7998	-101.53	-11.98	0.82
37	SLV 10	-40	2603	7998	-101.53	-11.98	0.82
37	SLV 11	-16	-478	3739	38.43	-3.91	0.62
37	SLV 12	-16	-478	3739	38.43	-3.91	0.62
37	SLV 13	-44	1880	7133	-64.2	-13.16	1.04
37	SLV 14	-44	1880	7133	-64.2	-13.16	1.04
37	SLV 15	-37	955	5855	-22.22	-10.74	0.98
37	SLV 16	-37	955	5855	-22.22	-10.74	0.98
38	SLU 1	4	875	4847	-30.95	3.74	-0.01
38	SLU 2	4	789	4737	-27.79	3.85	-0.01
38	SLU 3	4	900	4936	-31.88	3.82	-0.01
38	SLU 4	4	849	4870	-29.98	3.89	-0.01
38	SLU 5	4	805	4795	-28.37	3.89	-0.01
38	SLU 6	4	916	4994	-32.47	3.86	-0.01
38	SLU 7	4	865	4928	-30.56	3.93	-0.01
38	SLU 8	4	907	4963	-32.13	3.82	-0.01
38	SLU 9	4	855	4897	-30.23	3.89	-0.01
38	SLU 10	5	919	5347	-32.45	4.35	-0.01
38	SLU 11	5	1031	5546	-36.54	4.31	-0.01

Nodo	Cont.	Reazione a traslazione			Reazione a rotazione		
Ind.	N.br.	x	y	z	x	y	z
38	SLU 12	5	979	5480	-34.64	4.38	-0.01
38	SLU 13	5	935	5405	-33.04	4.39	-0.01
38	SLU 14	5	1046	5604	-37.13	4.36	-0.01
38	SLU 15	5	995	5538	-35.23	4.43	-0.01
38	SLU 16	5	1037	5573	-36.79	4.32	-0.01
38	SLU 17	5	985	5507	-34.89	4.39	-0.01
38	SLU 18	5	1061	5719	-37.62	4.45	-0.01
38	SLU 19	5	1009	5653	-35.72	4.52	-0.01
38	SLU 20	5	1077	5777	-38.21	4.49	-0.01
38	SLU 21	5	1025	5711	-36.3	4.56	-0.01
38	SLU 22	5	982	5314	-34.79	4.23	-0.01
38	SLU 23	5	896	5204	-31.63	4.35	-0.01
38	SLU 24	5	1007	5403	-35.72	4.31	-0.01
38	SLU 25	5	956	5337	-33.82	4.38	-0.01
38	SLU 26	5	912	5262	-32.21	4.39	-0.01
38	SLU 27	5	1023	5461	-36.31	4.35	-0.01
38	SLU 28	5	972	5395	-34.4	4.42	-0.01
38	SLU 29	5	1014	5430	-35.97	4.31	-0.01
38	SLU 30	5	962	5364	-34.07	4.38	-0.01
38	SLU 31	6	1026	5814	-36.29	4.85	-0.01
38	SLU 32	6	1138	6013	-40.38	4.81	-0.01
38	SLU 33	6	1086	5947	-38.48	4.88	-0.01
38	SLU 34	6	1042	5872	-36.88	4.89	-0.01
38	SLU 35	6	1153	6071	-40.97	4.85	-0.01
38	SLU 36	6	1102	6005	-39.07	4.92	-0.01
38	SLU 37	6	1144	6041	-40.63	4.81	-0.01
38	SLU 38	6	1092	5974	-38.73	4.88	-0.01
38	SLU 39	6	1168	6186	-41.46	4.94	-0.01
38	SLU 40	6	1116	6120	-39.56	5.01	-0.01
38	SLU 41	6	1184	6244	-42.05	4.98	-0.01
38	SLU 42	6	1132	6178	-40.14	5.05	-0.01
38	SLU 43	5	1101	6141	-38.92	4.69	-0.01
38	SLU 44	5	1015	6031	-35.76	4.8	-0.01
38	SLU 45	5	1126	6230	-39.85	4.77	-0.01
38	SLU 46	5	1075	6164	-37.95	4.84	-0.01
38	SLU 47	5	1031	6089	-36.34	4.84	-0.01
38	SLU 48	5	1142	6288	-40.44	4.81	-0.01
38	SLU 49	5	1090	6222	-38.53	4.88	-0.01
38	SLU 50	5	1133	6257	-40.1	4.77	-0.01
38	SLU 51	5	1081	6191	-38.2	4.84	-0.01
38	SLU 52	6	1145	6641	-40.42	5.3	-0.01
38	SLU 53	6	1256	6840	-44.51	5.27	-0.01
38	SLU 54	6	1205	6774	-42.61	5.34	-0.01
38	SLU 55	6	1161	6699	-41.01	5.34	-0.01
38	SLU 56	6	1272	6898	-45.1	5.31	-0.01
38	SLU 57	6	1221	6832	-43.2	5.38	-0.01
38	SLU 58	6	1263	6867	-44.76	5.27	-0.01
38	SLU 59	6	1211	6801	-42.86	5.34	-0.01
38	SLU 60	6	1287	7013	-45.59	5.4	-0.02
38	SLU 61	6	1235	6946	-43.69	5.47	-0.02
38	SLU 62	6	1303	7071	-46.18	5.44	-0.02
38	SLU 63	6	1251	7005	-44.27	5.51	-0.02
38	SLU 64	6	1208	6608	-42.76	5.18	-0.01
38	SLU 65	6	1122	6498	-39.6	5.3	-0.01
38	SLU 66	6	1233	6697	-43.69	5.26	-0.01
38	SLU 67	6	1181	6631	-41.79	5.33	-0.01
38	SLU 68	6	1138	6556	-40.18	5.34	-0.01
38	SLU 69	6	1249	6755	-44.28	5.3	-0.01
38	SLU 70	6	1197	6689	-42.37	5.37	-0.01
38	SLU 71	6	1240	6724	-43.94	5.26	-0.01
38	SLU 72	6	1188	6658	-42.04	5.33	-0.01
38	SLU 73	7	1252	7108	-44.26	5.8	-0.02
38	SLU 74	7	1363	7307	-48.35	5.76	-0.02
38	SLU 75	7	1312	7241	-46.45	5.83	-0.02
38	SLU 76	7	1268	7166	-44.85	5.84	-0.02
38	SLU 77	7	1379	7365	-48.94	5.8	-0.02
38	SLU 78	7	1328	7299	-47.04	5.87	-0.02
38	SLU 79	7	1370	7334	-48.6	5.76	-0.02
38	SLU 80	7	1318	7268	-46.7	5.83	-0.02
38	SLU 81	7	1394	7480	-49.43	5.89	-0.02
38	SLU 82	7	1342	7414	-47.53	5.96	-0.02
38	SLU 83	7	1410	7538	-50.02	5.93	-0.02
38	SLU 84	7	1358	7472	-48.11	6	-0.02
38	SLE RA 1	4	906	4980	-32.05	3.88	-0.01
38	SLE RA 2	4	848	4907	-29.94	3.96	-0.01
38	SLE RA 3	4	922	5040	-32.67	3.93	-0.01
38	SLE RA 4	4	888	4996	-31.4	3.98	-0.01
38	SLE RA 5	4	859	4946	-30.33	3.98	-0.01
38	SLE RA 6	4	933	5078	-33.06	3.96	-0.01
38	SLE RA 7	4	899	5034	-31.79	4.01	-0.01
38	SLE RA 8	4	927	5058	-32.84	3.93	-0.01
38	SLE RA 9	4	892	5014	-31.57	3.98	-0.01
38	SLE RA 10	5	935	5314	-33.05	4.29	-0.01
38	SLE RA 11	5	1009	5446	-35.78	4.26	-0.01
38	SLE RA 12	5	975	5402	-34.51	4.31	-0.01
38	SLE RA 13	5	946	5353	-33.44	4.31	-0.01
38	SLE RA 14	5	1020	5485	-36.17	4.29	-0.01
38	SLE RA 15	5	985	5441	-34.9	4.34	-0.01
38	SLE RA 16	5	1014	5465	-35.94	4.26	-0.01
38	SLE RA 17	5	979	5421	-34.68	4.31	-0.01

Nodo	Cont.	Reazione a traslazione			Reazione a rotazione		
Ind.	N.br.	x	y	z	x	y	z
38	SLE RA 18	5	1030	5562	-36.49	4.35	-0.01
38	SLE RA 19	5	995	5518	-35.23	4.4	-0.01
38	SLE RA 20	5	1040	5600	-36.89	4.38	-0.01
38	SLE RA 21	5	1006	5556	-35.62	4.43	-0.01
38	SLE FR 1	4	906	4980	-32.05	3.88	-0.01
38	SLE FR 2	4	894	4966	-31.63	3.89	-0.01
38	SLE FR 3	4	910	4996	-32.21	3.89	-0.01
38	SLE FR 4	4	931	5140	-32.96	4.04	-0.01
38	SLE FR 5	4	947	5170	-33.54	4.03	-0.01
38	SLE FR 6	5	968	5271	-34.27	4.11	-0.01
38	SLE QP 1	4	906	4980	-32.05	3.88	-0.01
38	SLE QP 2	4	943	5155	-33.38	4.02	-0.01
38	SLD 1	13	1292	5601	-45.75	10.66	-0.03
38	SLD 2	13	1292	5601	-45.75	10.66	-0.03
38	SLD 3	7	911	5048	-32.09	7.17	-0.02
38	SLD 4	7	911	5048	-32.09	7.17	-0.02
38	SLD 5	16	1626	6127	-57.82	11.3	-0.03
38	SLD 6	16	1626	6127	-57.82	11.3	-0.03
38	SLD 7	-4	355	4284	-12.28	-0.33	0
38	SLD 8	-4	355	4284	-12.28	-0.33	0
38	SLD 9	13	1531	6025	-54.49	8.37	-0.02
38	SLD 10	13	1531	6025	-54.49	8.37	-0.02
38	SLD 11	-7	260	4182	-8.95	-3.26	0.01
38	SLD 12	-7	260	4182	-8.95	-3.26	0.01
38	SLD 13	2	975	5261	-34.68	0.87	0
38	SLD 14	2	975	5261	-34.68	0.87	0
38	SLD 15	-4	594	4709	-21.02	-2.62	0
38	SLD 16	-4	594	4709	-21.02	-2.62	0
38	SLV 1	25	1762	6202	-62.42	19.54	-0.05
38	SLV 2	25	1762	6202	-62.42	19.54	-0.05
38	SLV 3	10	867	4902	-30.33	11.38	-0.03
38	SLV 4	10	867	4902	-30.33	11.38	-0.03
38	SLV 5	32	2547	7441	-90.77	21.06	-0.05
38	SLV 6	32	2547	7441	-90.77	21.06	-0.05
38	SLV 7	-15	-438	3107	16.2	-6.16	0.01
38	SLV 8	-15	-438	3107	16.2	-6.16	0.01
38	SLV 9	24	2324	7203	-82.97	14.2	-0.04
38	SLV 10	24	2324	7203	-82.97	14.2	-0.04
38	SLV 11	-23	-661	2868	24	-13.02	0.03
38	SLV 12	-23	-661	2868	24	-13.02	0.03
38	SLV 13	-1	1019	5407	-36.44	-3.34	0.01
38	SLV 14	-1	1019	5407	-36.44	-3.34	0.01
38	SLV 15	-16	123	4107	-4.35	-11.51	0.03
38	SLV 16	-16	123	4107	-4.35	-11.51	0.03
39	SLU 1	0	-330	3459	30.71	0.44	0.01
39	SLU 2	0	-434	3688	35.74	0.48	0
39	SLU 3	0	-339	3502	31.42	0.42	0.01
39	SLU 4	0	-401	3639	34.44	0.44	0.01
39	SLU 5	0	-442	3708	36.24	0.45	0.01
39	SLU 6	0	-348	3522	31.92	0.39	0.01
39	SLU 7	0	-410	3659	34.93	0.42	0.01
39	SLU 8	0	-347	3499	31.7	0.39	0.01
39	SLU 9	0	-410	3636	34.72	0.41	0.01
39	SLU 10	0	-473	4159	40.09	0.55	0.01
39	SLU 11	0	-378	3973	35.77	0.49	0.01
39	SLU 12	0	-440	4110	38.79	0.52	0.01
39	SLU 13	0	-482	4179	40.59	0.52	0.01
39	SLU 14	0	-387	3993	36.27	0.47	0.01
39	SLU 15	0	-449	4130	39.28	0.49	0.01
39	SLU 16	0	-386	3971	36.05	0.46	0.01
39	SLU 17	0	-449	4108	39.07	0.48	0.01
39	SLU 18	1	-386	4133	36.92	0.55	0.01
39	SLU 19	1	-448	4270	39.94	0.57	0.01
39	SLU 20	0	-395	4153	37.42	0.52	0.01
39	SLU 21	0	-457	4290	40.44	0.54	0.01
39	SLU 22	1	-366	3861	34.59	0.52	0.01
39	SLU 23	0	-470	4089	39.62	0.55	0.01
39	SLU 24	0	-375	3903	35.3	0.5	0.01
39	SLU 25	0	-437	4040	38.32	0.52	0.01
39	SLU 26	0	-478	4109	40.12	0.52	0.01
39	SLU 27	0	-383	3923	35.8	0.47	0.01
39	SLU 28	0	-446	4060	38.82	0.49	0.01
39	SLU 29	0	-383	3901	35.59	0.46	0.01
39	SLU 30	0	-445	4038	38.6	0.48	0.01
39	SLU 31	1	-509	4560	43.97	0.62	0.01
39	SLU 32	1	-414	4375	39.65	0.57	0.01
39	SLU 33	0	-476	4512	42.67	0.59	0.01
39	SLU 34	0	-517	4580	44.47	0.6	0.01
39	SLU 35	0	-423	4395	40.15	0.54	0.01
39	SLU 36	0	-485	4531	43.17	0.56	0.01
39	SLU 37	0	-422	4372	39.94	0.53	0.01
39	SLU 38	0	-485	4509	42.95	0.55	0.01
39	SLU 39	1	-422	4534	40.81	0.62	0.01
39	SLU 40	1	-484	4671	43.83	0.64	0.01
39	SLU 41	1	-431	4554	41.3	0.59	0.01
39	SLU 42	1	-493	4691	44.32	0.61	0.01
39	SLU 43	1	-417	4360	38.59	0.55	0.01
39	SLU 44	0	-521	4588	43.62	0.59	0.01
39	SLU 45	0	-426	4402	39.3	0.53	0.01
39	SLU 46	0	-488	4539	42.32	0.55	0.01

Nodo	Cont.	Reazione a traslazione			Reazione a rotazione		
Ind.	N.br.	x	y	z	x	y	z
39	SLU 47	0	-529	4608	44.12	0.56	0.01
39	SLU 48	0	-434	4422	39.8	0.5	0.01
39	SLU 49	0	-497	4559	42.82	0.52	0.01
39	SLU 50	0	-434	4400	39.59	0.49	0.01
39	SLU 51	0	-496	4536	42.6	0.52	0.01
39	SLU 52	1	-560	5059	47.97	0.66	0.01
39	SLU 53	1	-465	4873	43.65	0.6	0.01
39	SLU 54	0	-527	5010	46.67	0.62	0.01
39	SLU 55	0	-568	5079	48.47	0.63	0.01
39	SLU 56	0	-474	4893	44.15	0.57	0.01
39	SLU 57	0	-536	5030	47.17	0.6	0.01
39	SLU 58	0	-473	4871	43.94	0.57	0.01
39	SLU 59	0	-535	5008	46.95	0.59	0.01
39	SLU 60	1	-473	5033	44.81	0.65	0.01
39	SLU 61	1	-535	5170	47.83	0.67	0.01
39	SLU 62	1	-481	5053	45.3	0.62	0.01
39	SLU 63	1	-544	5190	48.32	0.65	0.01
39	SLU 64	1	-453	4761	42.48	0.62	0.01
39	SLU 65	1	-556	4989	47.51	0.66	0.01
39	SLU 66	1	-462	4803	43.19	0.6	0.01
39	SLU 67	0	-524	4940	46.2	0.63	0.01
39	SLU 68	0	-565	5009	48	0.63	0.01
39	SLU 69	0	-470	4823	43.68	0.58	0.01
39	SLU 70	0	-532	4960	46.7	0.6	0.01
39	SLU 71	0	-470	4801	43.47	0.57	0.01
39	SLU 72	0	-532	4938	46.49	0.59	0.01
39	SLU 73	1	-596	5461	51.86	0.73	0.01
39	SLU 74	1	-501	5275	47.53	0.68	0.01
39	SLU 75	1	-563	5412	50.55	0.7	0.01
39	SLU 76	1	-604	5481	52.35	0.7	0.01
39	SLU 77	1	-509	5295	48.03	0.65	0.01
39	SLU 78	0	-572	5432	51.05	0.67	0.01
39	SLU 79	1	-509	5272	47.82	0.64	0.01
39	SLU 80	0	-571	5409	50.84	0.66	0.01
39	SLU 81	1	-509	5435	48.69	0.73	0.01
39	SLU 82	1	-571	5571	51.71	0.75	0.01
39	SLU 83	1	-517	5454	49.19	0.7	0.01
39	SLU 84	1	-579	5591	52.2	0.72	0.01
39	SLE RA 1	0	-340	3574	31.82	0.46	0.01
39	SLE RA 2	0	-410	3726	35.17	0.49	0.01
39	SLE RA 3	0	-346	3602	32.29	0.45	0.01
39	SLE RA 4	0	-388	3694	34.31	0.46	0.01
39	SLE RA 5	0	-415	3740	35.51	0.47	0.01
39	SLE RA 6	0	-352	3616	32.62	0.43	0.01
39	SLE RA 7	0	-394	3707	34.64	0.45	0.01
39	SLE RA 8	0	-352	3601	32.48	0.43	0.01
39	SLE RA 9	0	-393	3692	34.49	0.44	0.01
39	SLE RA 10	0	-436	4041	38.07	0.54	0.01
39	SLE RA 11	0	-372	3917	35.19	0.5	0.01
39	SLE RA 12	0	-414	4008	37.21	0.51	0.01
39	SLE RA 13	0	-441	4054	38.4	0.52	0.01
39	SLE RA 14	0	-378	3930	35.52	0.48	0.01
39	SLE RA 15	0	-420	4021	37.54	0.49	0.01
39	SLE RA 16	0	-378	3915	35.38	0.47	0.01
39	SLE RA 17	0	-419	4006	37.39	0.49	0.01
39	SLE RA 18	1	-378	4023	35.96	0.53	0.01
39	SLE RA 19	1	-419	4114	37.98	0.55	0.01
39	SLE RA 20	0	-383	4036	36.29	0.51	0.01
39	SLE RA 21	0	-425	4128	38.31	0.53	0.01
39	SLE FR 1	0	-340	3574	31.82	0.46	0.01
39	SLE FR 2	0	-354	3605	32.49	0.47	0.01
39	SLE FR 3	0	-343	3579	31.95	0.46	0.01
39	SLE FR 4	0	-365	3739	33.73	0.49	0.01
39	SLE FR 5	0	-354	3714	33.2	0.48	0.01
39	SLE FR 6	1	-359	3799	33.89	0.5	0.01
39	SLE QP 1	0	-340	3574	31.82	0.46	0.01
39	SLE QP 2	0	-352	3709	33.06	0.48	0.01
39	SLD 1	3	-41	4377	21.69	2.28	0
39	SLD 2	3	-41	4377	21.69	2.28	0
39	SLD 3	7	-350	3939	34.59	1.61	-0.01
39	SLD 4	7	-350	3939	34.59	1.61	-0.01
39	SLD 5	-4	210	4573	10.08	2.03	0.02
39	SLD 6	-4	210	4573	10.08	2.03	0.02
39	SLD 7	8	-819	3114	53.09	-0.18	-0.01
39	SLD 8	8	-819	3114	53.09	-0.18	-0.01
39	SLD 9	-7	116	4304	13.04	1.15	0.03
39	SLD 10	-7	116	4304	13.04	1.15	0.03
39	SLD 11	5	-913	2845	56.04	-1.06	-0.01
39	SLD 12	5	-913	2845	56.04	-1.06	-0.01
39	SLD 13	-6	-353	3479	31.54	-0.65	0.02
39	SLD 14	-6	-353	3479	31.54	-0.65	0.02
39	SLD 15	-2	-662	3041	44.44	-1.31	0.01
39	SLD 16	-2	-662	3041	44.44	-1.31	0.01
39	SLV 1	7	386	5285	5.88	4.71	-0.01
39	SLV 2	7	386	5285	5.88	4.71	-0.01
39	SLV 3	15	-353	4240	36.8	3.12	-0.03
39	SLV 4	15	-353	4240	36.8	3.12	-0.03
39	SLV 5	-11	991	5768	-21.98	4.16	0.04
39	SLV 6	-11	991	5768	-21.98	4.16	0.04
39	SLV 7	18	-1474	2282	81.08	-1.14	-0.04

Nodo	Cont.	Reazione a traslazione			Reazione a rotazione		
Ind.	N.br.	x	y	z	x	y	z
39	SLV 8	18	-1474	2282	81.08	-1.14	-0.04
39	SLV 9	-17	771	5136	-14.95	2.1	0.06
39	SLV 10	-17	771	5136	-14.95	2.1	0.06
39	SLV 11	11	-1695	1650	88.11	-3.19	-0.03
39	SLV 12	11	-1695	1650	88.11	-3.19	-0.03
39	SLV 13	-14	-350	3178	29.32	-2.15	0.05
39	SLV 14	-14	-350	3178	29.32	-2.15	0.05
39	SLV 15	-6	-1089	2132	60.24	-3.74	0.02
39	SLV 16	-6	-1089	2132	60.24	-3.74	0.02
40	SLU 1	-3	18	146	0.65	-1.01	0.2
40	SLU 2	-3	16	143	0.69	-1.02	0.2
40	SLU 3	-3	13	136	0.77	-1.03	0.2
40	SLU 4	-3	12	134	0.79	-1.03	0.2
40	SLU 5	-3	13	136	0.77	-1.03	0.2
40	SLU 6	-3	10	129	0.85	-1.04	0.2
40	SLU 7	-3	9	128	0.87	-1.04	0.21
40	SLU 8	-3	12	132	0.81	-1.03	0.2
40	SLU 9	-3	11	131	0.84	-1.03	0.2
40	SLU 10	-4	43	247	0.63	-1.55	0.3
40	SLU 11	-4	40	241	0.7	-1.56	0.3
40	SLU 12	-4	39	239	0.73	-1.56	0.3
40	SLU 13	-4	40	240	0.71	-1.56	0.3
40	SLU 14	-4	36	234	0.78	-1.57	0.3
40	SLU 15	-4	36	232	0.81	-1.57	0.3
40	SLU 16	-4	38	237	0.75	-1.56	0.3
40	SLU 17	-4	37	235	0.77	-1.56	0.3
40	SLU 18	-5	55	295	0.56	-1.77	0.34
40	SLU 19	-5	54	293	0.58	-1.78	0.34
40	SLU 20	-5	52	288	0.64	-1.78	0.34
40	SLU 21	-5	51	286	0.66	-1.78	0.34
40	SLU 22	-4	11	144	0.99	-1.22	0.24
40	SLU 23	-4	9	140	1.03	-1.23	0.24
40	SLU 24	-4	6	134	1.1	-1.24	0.24
40	SLU 25	-4	5	132	1.13	-1.24	0.24
40	SLU 26	-4	6	134	1.11	-1.24	0.24
40	SLU 27	-4	3	127	1.18	-1.24	0.24
40	SLU 28	-4	2	125	1.21	-1.25	0.25
40	SLU 29	-4	5	130	1.15	-1.24	0.24
40	SLU 30	-4	4	128	1.17	-1.24	0.24
40	SLU 31	-5	36	245	0.96	-1.76	0.34
40	SLU 32	-5	33	238	1.04	-1.77	0.34
40	SLU 33	-5	32	236	1.06	-1.77	0.34
40	SLU 34	-5	32	238	1.04	-1.77	0.34
40	SLU 35	-5	29	232	1.12	-1.78	0.34
40	SLU 36	-5	28	230	1.14	-1.78	0.35
40	SLU 37	-5	31	235	1.08	-1.77	0.34
40	SLU 38	-5	30	233	1.11	-1.77	0.34
40	SLU 39	-5	48	293	0.9	-1.98	0.38
40	SLU 40	-5	47	291	0.92	-1.99	0.38
40	SLU 41	-5	45	286	0.98	-1.99	0.38
40	SLU 42	-5	44	284	1	-1.99	0.39
40	SLU 43	-4	26	190	0.74	-1.25	0.25
40	SLU 44	-4	24	187	0.77	-1.25	0.25
40	SLU 45	-4	21	181	0.85	-1.26	0.25
40	SLU 46	-4	20	179	0.87	-1.26	0.25
40	SLU 47	-4	21	180	0.85	-1.26	0.25
40	SLU 48	-4	18	174	0.93	-1.27	0.25
40	SLU 49	-4	17	172	0.95	-1.27	0.25
40	SLU 50	-4	19	177	0.89	-1.26	0.25
40	SLU 51	-4	18	175	0.92	-1.27	0.25
40	SLU 52	-5	50	292	0.71	-1.78	0.35
40	SLU 53	-5	47	285	0.79	-1.79	0.35
40	SLU 54	-5	46	283	0.81	-1.8	0.35
40	SLU 55	-5	47	285	0.79	-1.79	0.35
40	SLU 56	-5	44	278	0.87	-1.8	0.35
40	SLU 57	-5	43	276	0.89	-1.8	0.35
40	SLU 58	-5	46	281	0.83	-1.79	0.35
40	SLU 59	-5	45	279	0.85	-1.8	0.35
40	SLU 60	-5	63	339	0.64	-2	0.39
40	SLU 61	-5	62	338	0.67	-2.01	0.39
40	SLU 62	-5	60	333	0.72	-2.01	0.39
40	SLU 63	-5	59	331	0.75	-2.02	0.39
40	SLU 64	-4	19	188	1.07	-1.46	0.29
40	SLU 65	-4	17	185	1.11	-1.46	0.29
40	SLU 66	-4	14	178	1.19	-1.47	0.29
40	SLU 67	-4	13	177	1.21	-1.47	0.29
40	SLU 68	-4	14	178	1.19	-1.47	0.29
40	SLU 69	-4	11	172	1.27	-1.48	0.29
40	SLU 70	-4	10	170	1.29	-1.48	0.29
40	SLU 71	-4	12	175	1.23	-1.47	0.29
40	SLU 72	-4	11	173	1.25	-1.48	0.29
40	SLU 73	-5	43	289	1.04	-1.99	0.39
40	SLU 74	-5	40	283	1.12	-2	0.39
40	SLU 75	-5	39	281	1.14	-2.01	0.39
40	SLU 76	-5	40	283	1.12	-2	0.39
40	SLU 77	-5	37	276	1.2	-2.01	0.39
40	SLU 78	-5	36	274	1.22	-2.01	0.39
40	SLU 79	-5	39	279	1.17	-2	0.39
40	SLU 80	-5	38	277	1.19	-2.01	0.39
40	SLU 81	-6	56	337	0.98	-2.21	0.43

Nodo	Cont.	Reazione a traslazione			Reazione a rotazione		
Ind.	N.br.	x	y	z	x	y	z
40	SLU 82	-6	55	335	1	-2.22	0.43
40	SLU 83	-6	53	331	1.06	-2.22	0.43
40	SLU 84	-6	52	329	1.08	-2.23	0.43
40	SLE RA 1	-3	16	145	0.75	-1.07	0.21
40	SLE RA 2	-3	15	143	0.78	-1.08	0.21
40	SLE RA 3	-3	13	139	0.83	-1.08	0.21
40	SLE RA 4	-3	12	137	0.84	-1.09	0.21
40	SLE RA 5	-3	13	139	0.83	-1.08	0.21
40	SLE RA 6	-3	11	134	0.88	-1.09	0.21
40	SLE RA 7	-3	10	133	0.89	-1.09	0.22
40	SLE RA 8	-3	12	136	0.86	-1.08	0.21
40	SLE RA 9	-3	11	135	0.87	-1.09	0.21
40	SLE RA 10	-4	32	213	0.73	-1.43	0.28
40	SLE RA 11	-4	30	208	0.78	-1.44	0.28
40	SLE RA 12	-4	30	207	0.8	-1.44	0.28
40	SLE RA 13	-4	30	208	0.79	-1.44	0.28
40	SLE RA 14	-4	28	204	0.84	-1.44	0.28
40	SLE RA 15	-4	28	203	0.85	-1.45	0.28
40	SLE RA 16	-4	29	206	0.81	-1.44	0.28
40	SLE RA 17	-4	29	205	0.83	-1.44	0.28
40	SLE RA 18	-4	41	245	0.69	-1.58	0.31
40	SLE RA 19	-4	40	243	0.7	-1.58	0.31
40	SLE RA 20	-4	39	240	0.74	-1.58	0.31
40	SLE RA 21	-4	38	239	0.76	-1.59	0.31
40	SLE FR 1	-3	16	145	0.75	-1.07	0.21
40	SLE FR 2	-3	16	145	0.76	-1.07	0.21
40	SLE FR 3	-3	15	143	0.77	-1.08	0.21
40	SLE FR 4	-3	23	175	0.74	-1.23	0.24
40	SLE FR 5	-3	23	173	0.75	-1.23	0.24
40	SLE FR 6	-4	28	195	0.72	-1.33	0.26
40	SLE QP 1	-3	16	145	0.75	-1.07	0.21
40	SLE QP 2	-3	23	175	0.73	-1.23	0.24
40	SLD 1	-14	56	252	0.01	-3.01	0.62
40	SLD 2	-14	56	252	0.01	-3.01	0.62
40	SLD 3	-13	-33	44	2.02	-2.81	0.58
40	SLD 4	-13	-33	44	2.02	-2.81	0.58
40	SLD 5	-8	169	513	-2.53	-2.06	0.42
40	SLD 6	-8	169	513	-2.53	-2.06	0.42
40	SLD 7	-5	-129	-179	4.16	-1.4	0.28
40	SLD 8	-5	-129	-179	4.16	-1.4	0.28
40	SLD 9	-2	176	529	-2.7	-1.05	0.2
40	SLD 10	-2	176	529	-2.7	-1.05	0.2
40	SLD 11	1	-122	-163	3.99	-0.39	0.06
40	SLD 12	1	-122	-163	3.99	-0.39	0.06
40	SLD 13	6	80	306	-0.55	0.36	-0.1
40	SLD 14	6	80	306	-0.55	0.36	-0.1
40	SLD 15	7	-9	98	1.45	0.56	-0.14
40	SLD 16	7	-9	98	1.45	0.56	-0.14
40	SLV 1	-28	100	356	-0.96	-5.4	1.13
40	SLV 2	-28	100	356	-0.96	-5.4	1.13
40	SLV 3	-25	-109	-131	3.75	-4.94	1.03
40	SLV 4	-25	-109	-131	3.75	-4.94	1.03
40	SLV 5	-15	364	968	-6.92	-3.19	0.66
40	SLV 6	-15	364	968	-6.92	-3.19	0.66
40	SLV 7	-6	-334	-656	8.78	-1.63	0.32
40	SLV 8	-6	-334	-656	8.78	-1.63	0.32
40	SLV 9	-1	381	1006	-7.31	-0.82	0.16
40	SLV 10	-1	381	1006	-7.31	-0.82	0.16
40	SLV 11	8	-317	-618	8.38	0.73	-0.18
40	SLV 12	8	-317	-618	8.38	0.73	-0.18
40	SLV 13	18	156	481	-2.28	2.49	-0.55
40	SLV 14	18	156	481	-2.28	2.49	-0.55
40	SLV 15	21	-53	-6	2.42	2.95	-0.65
40	SLV 16	21	-53	-6	2.42	2.95	-0.65
41	SLU 1	752	1632	7929	-69.46	22.37	0.25
41	SLU 2	866	1673	8449	-70.73	26.48	0.25
41	SLU 3	761	1675	8095	-71.36	22.55	0.26
41	SLU 4	830	1699	8407	-72.12	25.02	0.26
41	SLU 5	869	1695	8525	-71.75	26.47	0.25
41	SLU 6	764	1697	8171	-72.37	22.54	0.27
41	SLU 7	832	1722	8483	-73.14	25.01	0.26
41	SLU 8	757	1678	8081	-71.49	22.35	0.26
41	SLU 9	825	1702	8393	-72.25	24.81	0.26
41	SLU 10	975	1877	9471	-79.48	29.95	0.27
41	SLU 11	870	1880	9117	-80.11	26.03	0.28
41	SLU 12	938	1904	9429	-80.87	28.49	0.28
41	SLU 13	977	1900	9547	-80.49	29.94	0.28
41	SLU 14	872	1902	9193	-81.12	26.02	0.29
41	SLU 15	941	1927	9505	-81.88	28.48	0.29
41	SLU 16	865	1882	9103	-80.24	25.83	0.29
41	SLU 17	934	1907	9415	-81	28.29	0.29
41	SLU 18	907	1925	9389	-81.96	27.34	0.29
41	SLU 19	975	1949	9701	-82.72	29.8	0.28
41	SLU 20	909	1947	9465	-82.97	27.33	0.29
41	SLU 21	978	1972	9777	-83.73	29.79	0.29
41	SLU 22	844	1830	8873	-78	25.19	0.28
41	SLU 23	958	1870	9393	-79.27	29.3	0.28
41	SLU 24	853	1872	9039	-79.9	25.37	0.29
41	SLU 25	922	1897	9351	-80.66	27.84	0.29
41	SLU 26	960	1893	9469	-80.28	29.29	0.28

Nodo	Cont.	Reazione a traslazione			Reazione a rotazione		
Ind.	N.br.	x	y	z	x	y	z
41	SLU 27	856	1895	9115	-80.91	25.36	0.29
41	SLU 28	924	1919	9427	-81.67	27.83	0.29
41	SLU 29	848	1875	9025	-80.03	25.17	0.29
41	SLU 30	917	1900	9337	-80.79	27.63	0.29
41	SLU 31	1066	2075	10415	-88.02	32.77	0.3
41	SLU 32	961	2077	10061	-88.64	28.85	0.31
41	SLU 33	1030	2102	10373	-89.41	31.32	0.31
41	SLU 34	1069	2098	10491	-89.03	32.76	0.31
41	SLU 35	964	2100	10137	-89.66	28.84	0.32
41	SLU 36	1032	2124	10449	-90.42	31.3	0.32
41	SLU 37	957	2080	10047	-88.77	28.65	0.32
41	SLU 38	1025	2104	10359	-89.54	31.11	0.32
41	SLU 39	998	2122	10333	-90.5	30.16	0.31
41	SLU 40	1067	2147	10645	-91.26	32.62	0.31
41	SLU 41	1001	2145	10409	-91.51	30.15	0.32
41	SLU 42	1069	2169	10721	-92.27	32.61	0.32
41	SLU 43	946	2054	9984	-87.38	28.12	0.31
41	SLU 44	1060	2094	10504	-88.64	32.22	0.31
41	SLU 45	956	2097	10150	-89.27	28.3	0.32
41	SLU 46	1024	2121	10461	-90.03	30.76	0.32
41	SLU 47	1063	2117	10580	-89.66	32.21	0.32
41	SLU 48	958	2119	10226	-90.29	28.29	0.33
41	SLU 49	1027	2144	10538	-91.05	30.75	0.33
41	SLU 50	951	2099	10136	-89.4	28.09	0.33
41	SLU 51	1020	2124	10448	-90.16	30.56	0.32
41	SLU 52	1169	2299	11526	-97.39	35.7	0.34
41	SLU 53	1064	2301	11172	-98.02	31.78	0.35
41	SLU 54	1133	2326	11484	-98.78	34.24	0.35
41	SLU 55	1171	2322	11602	-98.4	35.69	0.34
41	SLU 56	1066	2324	11248	-99.03	31.76	0.36
41	SLU 57	1135	2348	11560	-99.79	34.23	0.35
41	SLU 58	1059	2304	11158	-98.15	31.57	0.35
41	SLU 59	1128	2329	11470	-98.91	34.03	0.35
41	SLU 60	1101	2346	11444	-99.87	33.08	0.35
41	SLU 61	1170	2371	11756	-100.63	35.55	0.35
41	SLU 62	1103	2369	11520	-100.88	33.07	0.36
41	SLU 63	1172	2394	11832	-101.64	35.54	0.35
41	SLU 64	1038	2252	10928	-95.91	30.94	0.34
41	SLU 65	1152	2292	11448	-97.18	35.04	0.34
41	SLU 66	1047	2294	11094	-97.81	31.12	0.35
41	SLU 67	1116	2319	11406	-98.57	33.58	0.35
41	SLU 68	1154	2315	11524	-98.2	35.03	0.35
41	SLU 69	1050	2317	11170	-98.82	31.11	0.36
41	SLU 70	1118	2341	11482	-99.59	33.57	0.36
41	SLU 71	1043	2297	11080	-97.94	30.91	0.36
41	SLU 72	1111	2321	11392	-98.7	33.38	0.35
41	SLU 73	1260	2497	12470	-105.93	38.52	0.37
41	SLU 74	1156	2499	12116	-106.56	34.6	0.38
41	SLU 75	1224	2523	12428	-107.32	37.06	0.38
41	SLU 76	1263	2520	12546	-106.94	38.51	0.37
41	SLU 77	1158	2522	12192	-107.57	34.58	0.38
41	SLU 78	1227	2546	12504	-108.33	37.05	0.38
41	SLU 79	1151	2502	12102	-106.69	34.39	0.38
41	SLU 80	1220	2526	12414	-107.45	36.85	0.38
41	SLU 81	1193	2544	12388	-108.41	35.9	0.38
41	SLU 82	1261	2569	12700	-109.17	38.37	0.38
41	SLU 83	1195	2567	12464	-109.42	35.89	0.39
41	SLU 84	1264	2591	12776	-110.18	38.36	0.38
41	SLE RA 1	778	1689	8199	-71.9	23.18	0.26
41	SLE RA 2	854	1716	8545	-72.75	25.91	0.26
41	SLE RA 3	785	1717	8309	-73.17	23.3	0.26
41	SLE RA 4	830	1733	8517	-73.68	24.94	0.26
41	SLE RA 5	856	1731	8596	-73.42	25.91	0.26
41	SLE RA 6	786	1732	8360	-73.84	23.29	0.27
41	SLE RA 7	832	1748	8568	-74.35	24.93	0.27
41	SLE RA 8	781	1719	8300	-73.25	23.16	0.27
41	SLE RA 9	827	1735	8508	-73.76	24.8	0.26
41	SLE RA 10	927	1852	9227	-78.58	28.23	0.27
41	SLE RA 11	857	1854	8991	-79	25.62	0.28
41	SLE RA 12	902	1870	9198	-79.51	27.26	0.28
41	SLE RA 13	928	1867	9277	-79.26	28.23	0.28
41	SLE RA 14	858	1869	9041	-79.67	25.61	0.29
41	SLE RA 15	904	1885	9249	-80.18	27.25	0.28
41	SLE RA 16	854	1855	8982	-79.09	25.48	0.28
41	SLE RA 17	899	1872	9189	-79.59	27.12	0.28
41	SLE RA 18	881	1884	9172	-80.23	26.49	0.28
41	SLE RA 19	927	1900	9380	-80.74	28.13	0.28
41	SLE RA 20	883	1899	9223	-80.91	26.48	0.29
41	SLE RA 21	929	1915	9431	-81.42	28.12	0.28
41	SLE FR 1	778	1689	8199	-71.9	23.18	0.26
41	SLE FR 2	793	1694	8268	-72.07	23.72	0.26
41	SLE FR 3	779	1695	8219	-72.17	23.17	0.26
41	SLE FR 4	824	1752	8560	-74.57	24.72	0.26
41	SLE FR 5	810	1753	8511	-74.67	24.17	0.27
41	SLE FR 6	830	1786	8685	-76.07	24.83	0.27
41	SLE QP 1	778	1689	8199	-71.9	23.18	0.26
41	SLE QP 2	809	1747	8491	-74.4	24.17	0.26
41	SLD 1	1324	2217	11556	-92.98	44.89	0.18
41	SLD 2	1324	2217	11556	-92.98	44.89	0.18
41	SLD 3	1211	1930	10309	-80.36	41.6	0.09

Nodo	Cont.	Reazione a traslazione			Reazione a rotazione		
Ind.	N.br.	x	y	z	x	y	z
41	SLD 4	1211	1930	10309	-80.36	41.6	0.09
41	SLD 5	1135	2324	11301	-99.11	35.38	0.37
41	SLD 6	1135	2324	11301	-99.11	35.38	0.37
41	SLD 7	758	1366	7145	-57.05	24.4	0.08
41	SLD 8	758	1366	7145	-57.05	24.4	0.08
41	SLD 9	861	2129	9836	-91.75	23.94	0.45
41	SLD 10	861	2129	9836	-91.75	23.94	0.45
41	SLD 11	483	1170	5680	-49.69	12.96	0.16
41	SLD 12	483	1170	5680	-49.69	12.96	0.16
41	SLD 13	408	1564	6672	-68.45	6.74	0.44
41	SLD 14	408	1564	6672	-68.45	6.74	0.44
41	SLD 15	294	1277	5425	-55.83	3.45	0.35
41	SLD 16	294	1277	5425	-55.83	3.45	0.35
41	SLV 1	2020	2850	15690	-117.94	72.87	0.06
41	SLV 2	2020	2850	15690	-117.94	72.87	0.06
41	SLV 3	1741	2175	12726	-88.34	64.67	-0.14
41	SLV 4	1741	2175	12726	-88.34	64.67	-0.14
41	SLV 5	1595	3102	15146	-132.35	51.23	0.51
41	SLV 6	1595	3102	15146	-132.35	51.23	0.51
41	SLV 7	666	851	5266	-33.7	23.87	-0.16
41	SLV 8	666	851	5266	-33.7	23.87	-0.16
41	SLV 9	952	2643	11715	-115.11	24.47	0.69
41	SLV 10	952	2643	11715	-115.11	24.47	0.69
41	SLV 11	23	392	1836	-16.45	-2.89	0.02
41	SLV 12	23	392	1836	-16.45	-2.89	0.02
41	SLV 13	-123	1320	4256	-60.46	-16.33	0.67
41	SLV 14	-123	1320	4256	-60.46	-16.33	0.67
41	SLV 15	-402	644	1292	-30.86	-24.53	0.47
41	SLV 16	-402	644	1292	-30.86	-24.53	0.47
42	SLU 1	-124	-2	5911	-3.23	-7.15	-0.34
42	SLU 2	-13	-2	6277	-5.53	-0.67	-0.49
42	SLU 3	-139	-3	6028	-3.31	-7.87	-0.35
42	SLU 4	-72	-2	6248	-4.69	-3.98	-0.44
42	SLU 5	-23	-2	6329	-5.57	-1.12	-0.49
42	SLU 6	-149	-3	6079	-3.36	-8.32	-0.36
42	SLU 7	-82	-2	6299	-4.74	-4.43	-0.44
42	SLU 8	-144	-2	6014	-3.31	-8.04	-0.35
42	SLU 9	-77	-2	6234	-4.69	-4.16	-0.44
42	SLU 10	-9	-3	7038	-5.92	-0.67	-0.53
42	SLU 11	-135	-3	6789	-3.7	-7.86	-0.4
42	SLU 12	-69	-3	7009	-5.08	-3.98	-0.48
42	SLU 13	-19	-3	7090	-5.96	-1.11	-0.54
42	SLU 14	-145	-3	6840	-3.74	-8.31	-0.4
42	SLU 15	-78	-3	7060	-5.12	-4.42	-0.49
42	SLU 16	-140	-3	6775	-3.7	-8.04	-0.4
42	SLU 17	-73	-3	6995	-5.08	-4.15	-0.48
42	SLU 18	-119	-3	6998	-3.78	-7.14	-0.41
42	SLU 19	-52	-3	7218	-5.16	-3.26	-0.49
42	SLU 20	-128	-3	7050	-3.82	-7.59	-0.41
42	SLU 21	-62	-3	7270	-5.2	-3.7	-0.5
42	SLU 22	-138	-3	6609	-3.61	-8	-0.39
42	SLU 23	-27	-3	6975	-5.91	-1.52	-0.53
42	SLU 24	-152	-3	6726	-3.69	-8.71	-0.4
42	SLU 25	-86	-3	6946	-5.07	-4.83	-0.48
42	SLU 26	-37	-3	7027	-5.95	-1.96	-0.54
42	SLU 27	-162	-3	6777	-3.74	-9.16	-0.4
42	SLU 28	-96	-3	6997	-5.12	-5.27	-0.49
42	SLU 29	-157	-3	6712	-3.69	-8.89	-0.4
42	SLU 30	-91	-3	6932	-5.07	-5	-0.48
42	SLU 31	-23	-3	7737	-6.3	-1.51	-0.58
42	SLU 32	-149	-3	7487	-4.08	-8.71	-0.44
42	SLU 33	-82	-3	7707	-5.46	-4.82	-0.53
42	SLU 34	-33	-3	7788	-6.34	-1.96	-0.58
42	SLU 35	-158	-3	7539	-4.12	-9.15	-0.44
42	SLU 36	-92	-3	7758	-5.5	-5.27	-0.53
42	SLU 37	-153	-3	7473	-4.08	-8.88	-0.44
42	SLU 38	-87	-3	7693	-5.46	-4.99	-0.53
42	SLU 39	-132	-3	7696	-4.16	-7.99	-0.45
42	SLU 40	-66	-3	7916	-5.54	-4.1	-0.54
42	SLU 41	-142	-3	7748	-4.2	-8.43	-0.45
42	SLU 42	-76	-3	7968	-5.58	-4.55	-0.54
42	SLU 43	-157	-3	7445	-4.07	-9.01	-0.43
42	SLU 44	-46	-3	7811	-6.37	-2.53	-0.58
42	SLU 45	-171	-3	7562	-4.15	-9.73	-0.44
42	SLU 46	-105	-3	7782	-5.53	-5.84	-0.53
42	SLU 47	-56	-3	7863	-6.41	-2.98	-0.58
42	SLU 48	-181	-3	7613	-4.2	-10.17	-0.45
42	SLU 49	-115	-3	7833	-5.57	-6.28	-0.53
42	SLU 50	-176	-3	7548	-4.15	-9.9	-0.44
42	SLU 51	-110	-3	7768	-5.53	-6.01	-0.53
42	SLU 52	-42	-3	8572	-6.75	-2.52	-0.62
42	SLU 53	-168	-3	8323	-4.54	-9.72	-0.49
42	SLU 54	-101	-3	8543	-5.92	-5.83	-0.57
42	SLU 55	-52	-3	8624	-6.8	-2.97	-0.63
42	SLU 56	-177	-3	8374	-4.58	-10.17	-0.49
42	SLU 57	-111	-3	8594	-5.96	-6.28	-0.58
42	SLU 58	-172	-3	8309	-4.54	-9.89	-0.49
42	SLU 59	-106	-3	8529	-5.92	-6.01	-0.57
42	SLU 60	-151	-4	8532	-4.62	-9	-0.5
42	SLU 61	-85	-3	8752	-6	-5.11	-0.58

Nodo	Cont.	Reazione a traslazione			Reazione a rotazione		
Ind.	N.br.	x	y	z	x	y	z
42	SLU 62	-161	-4	8583	-4.66	-9.44	-0.5
42	SLU 63	-95	-3	8803	-6.04	-5.56	-0.59
42	SLU 64	-170	-3	8143	-4.45	-9.85	-0.48
42	SLU 65	-59	-3	8509	-6.75	-3.37	-0.62
42	SLU 66	-185	-3	8260	-4.53	-10.57	-0.48
42	SLU 67	-118	-3	8480	-5.91	-6.68	-0.57
42	SLU 68	-69	-3	8561	-6.79	-3.82	-0.63
42	SLU 69	-195	-3	8311	-4.58	-11.02	-0.49
42	SLU 70	-128	-3	8531	-5.96	-7.13	-0.58
42	SLU 71	-190	-3	8246	-4.53	-10.74	-0.48
42	SLU 72	-123	-3	8466	-5.91	-6.86	-0.57
42	SLU 73	-56	-3	9270	-7.14	-3.37	-0.67
42	SLU 74	-181	-4	9021	-4.92	-10.56	-0.53
42	SLU 75	-115	-4	9241	-6.3	-6.68	-0.62
42	SLU 76	-65	-4	9322	-7.18	-3.81	-0.67
42	SLU 77	-191	-4	9072	-4.96	-11.01	-0.53
42	SLU 78	-125	-4	9292	-6.34	-7.12	-0.62
42	SLU 79	-186	-4	9007	-4.92	-10.74	-0.53
42	SLU 80	-120	-4	9227	-6.3	-6.85	-0.62
42	SLU 81	-165	-4	9230	-5	-9.84	-0.54
42	SLU 82	-98	-4	9450	-6.38	-5.96	-0.63
42	SLU 83	-175	-4	9282	-5.04	-10.29	-0.54
42	SLU 84	-108	-4	9502	-6.42	-6.4	-0.63
42	SLE RA 1	-128	-3	6110	-3.34	-7.39	-0.36
42	SLE RA 2	-54	-2	6355	-4.87	-3.07	-0.45
42	SLE RA 3	-138	-3	6188	-3.39	-7.87	-0.36
42	SLE RA 4	-93	-2	6335	-4.31	-5.28	-0.42
42	SLE RA 5	-61	-2	6389	-4.9	-3.37	-0.46
42	SLE RA 6	-144	-3	6223	-3.42	-8.17	-0.36
42	SLE RA 7	-100	-2	6369	-4.34	-5.58	-0.42
42	SLE RA 8	-141	-3	6179	-3.39	-7.99	-0.36
42	SLE RA 9	-97	-2	6326	-4.31	-5.4	-0.42
42	SLE RA 10	-52	-3	6862	-5.13	-3.07	-0.48
42	SLE RA 11	-135	-3	6696	-3.65	-7.87	-0.39
42	SLE RA 12	-91	-3	6842	-4.57	-5.28	-0.45
42	SLE RA 13	-58	-3	6896	-5.16	-3.37	-0.49
42	SLE RA 14	-142	-3	6730	-3.68	-8.16	-0.39
42	SLE RA 15	-97	-3	6877	-4.6	-5.57	-0.45
42	SLE RA 16	-138	-3	6686	-3.65	-7.98	-0.39
42	SLE RA 17	-94	-3	6833	-4.57	-5.39	-0.45
42	SLE RA 18	-124	-3	6835	-3.71	-7.39	-0.4
42	SLE RA 19	-80	-3	6982	-4.63	-4.8	-0.46
42	SLE RA 20	-131	-3	6869	-3.74	-7.68	-0.4
42	SLE RA 21	-87	-3	7016	-4.65	-5.09	-0.46
42	SLE FR 1	-128	-3	6110	-3.34	-7.39	-0.36
42	SLE FR 2	-113	-2	6159	-3.65	-6.53	-0.38
42	SLE FR 3	-130	-3	6124	-3.35	-7.51	-0.36
42	SLE FR 4	-112	-3	6377	-3.76	-6.53	-0.39
42	SLE FR 5	-129	-3	6341	-3.46	-7.51	-0.37
42	SLE FR 6	-126	-3	6473	-3.52	-7.39	-0.38
42	SLE QP 1	-128	-3	6110	-3.34	-7.39	-0.36
42	SLE QP 2	-127	-3	6328	-3.45	-7.39	-0.37
42	SLD 1	237	-14	8415	-8.8	13.83	-0.82
42	SLD 2	237	-14	8415	-8.8	13.83	-0.82
42	SLD 3	351	-17	7551	-5.49	19.3	-0.57
42	SLD 4	351	-17	7551	-5.49	19.3	-0.57
42	SLD 5	-190	-2	8264	-10.08	-9.33	-0.88
42	SLD 6	-190	-2	8264	-10.08	-9.33	-0.88
42	SLD 7	188	-11	5384	0.96	8.91	-0.05
42	SLD 8	188	-11	5384	0.96	8.91	-0.05
42	SLD 9	-442	6	7271	-7.86	-23.7	-0.68
42	SLD 10	-442	6	7271	-7.86	-23.7	-0.68
42	SLD 11	-64	-3	4391	3.18	-5.46	0.14
42	SLD 12	-64	-3	4391	3.18	-5.46	0.14
42	SLD 13	-604	12	5104	-1.41	-34.08	-0.17
42	SLD 14	-604	12	5104	-1.41	-34.08	-0.17
42	SLD 15	-491	9	4240	1.91	-28.61	0.08
42	SLD 16	-491	9	4240	1.91	-28.61	0.08
42	SLV 1	720	-30	11231	-16.29	41.75	-1.44
42	SLV 2	720	-30	11231	-16.29	41.75	-1.44
42	SLV 3	992	-36	9179	-8.05	55.33	-0.82
42	SLV 4	992	-36	9179	-8.05	55.33	-0.82
42	SLV 5	-286	-1	10911	-19.8	-13.25	-1.63
42	SLV 6	-286	-1	10911	-19.8	-13.25	-1.63
42	SLV 7	622	-22	4071	7.67	32.03	0.43
42	SLV 8	622	-22	4071	7.67	32.03	0.43
42	SLV 9	-876	17	8585	-14.57	-46.81	-1.17
42	SLV 10	-876	17	8585	-14.57	-46.81	-1.17
42	SLV 11	32	-4	1744	12.9	-1.53	0.89
42	SLV 12	32	-4	1744	12.9	-1.53	0.89
42	SLV 13	-1246	31	3477	1.15	-70.11	0.08
42	SLV 14	-1246	31	3477	1.15	-70.11	0.08
42	SLV 15	-973	25	1425	9.39	-56.53	0.7
42	SLV 16	-973	25	1425	9.39	-56.53	0.7
43	SLU 1	-85	-4	4736	-4.71	0.85	0.04
43	SLU 2	31	-2	4995	-9.61	5.13	0.06
43	SLU 3	-97	-4	4824	-4.83	0.5	0.04
43	SLU 4	-27	-3	4979	-7.77	3.07	0.05
43	SLU 5	23	-2	5033	-9.66	4.87	0.06
43	SLU 6	-105	-4	4862	-4.88	0.25	0.04

Nodo	Cont.	Reazione a traslazione			Reazione a rotazione		
Ind.	N.br.	x	y	z	x	y	z
43	SLU 7	-36	-3	5017	-7.82	2.82	0.05
43	SLU 8	-101	-4	4812	-4.82	0.34	0.04
43	SLU 9	-32	-3	4967	-7.75	2.91	0.05
43	SLU 10	41	-3	5607	-10.18	5.99	0.07
43	SLU 11	-87	-4	5435	-5.4	1.36	0.04
43	SLU 12	-18	-3	5591	-8.33	3.93	0.06
43	SLU 13	33	-3	5645	-10.23	5.73	0.07
43	SLU 14	-96	-4	5473	-5.45	1.11	0.04
43	SLU 15	-26	-4	5629	-8.39	3.68	0.06
43	SLU 16	-92	-4	5424	-5.38	1.2	0.04
43	SLU 17	-22	-3	5579	-8.32	3.76	0.06
43	SLU 18	-71	-4	5610	-5.52	2.07	0.05
43	SLU 19	-1	-4	5765	-8.46	4.64	0.06
43	SLU 20	-79	-4	5648	-5.57	1.82	0.05
43	SLU 21	-10	-4	5803	-8.51	4.39	0.06
43	SLU 22	-92	-4	5291	-5.27	1.1	0.04
43	SLU 23	25	-3	5550	-10.17	5.39	0.07
43	SLU 24	-104	-4	5378	-5.39	0.76	0.04
43	SLU 25	-34	-3	5534	-8.33	3.33	0.06
43	SLU 26	16	-3	5588	-10.22	5.13	0.07
43	SLU 27	-112	-4	5416	-5.44	0.51	0.04
43	SLU 28	-43	-4	5572	-8.38	3.08	0.06
43	SLU 29	-108	-4	5367	-5.38	0.59	0.04
43	SLU 30	-38	-3	5522	-8.31	3.16	0.06
43	SLU 31	34	-3	6162	-10.73	6.25	0.07
43	SLU 32	-94	-5	5990	-5.96	1.62	0.05
43	SLU 33	-25	-4	6146	-8.89	4.19	0.06
43	SLU 34	26	-3	6200	-10.79	5.99	0.07
43	SLU 35	-103	-5	6028	-6.01	1.37	0.05
43	SLU 36	-33	-4	6184	-8.95	3.94	0.06
43	SLU 37	-99	-5	5979	-5.94	1.45	0.05
43	SLU 38	-29	-4	6134	-8.88	4.02	0.06
43	SLU 39	-78	-5	6165	-6.08	2.33	0.05
43	SLU 40	-8	-4	6320	-9.02	4.9	0.06
43	SLU 41	-86	-5	6203	-6.13	2.08	0.05
43	SLU 42	-16	-4	6358	-9.07	4.65	0.06
43	SLU 43	-108	-5	5967	-5.94	1.01	0.05
43	SLU 44	8	-3	6226	-10.83	5.29	0.07
43	SLU 45	-120	-5	6054	-6.05	0.67	0.05
43	SLU 46	-51	-4	6210	-8.99	3.24	0.06
43	SLU 47	0	-3	6264	-10.88	5.04	0.07
43	SLU 48	-128	-5	6092	-6.11	0.41	0.05
43	SLU 49	-59	-4	6248	-9.04	2.98	0.06
43	SLU 50	-124	-5	6043	-6.04	0.5	0.05
43	SLU 51	-55	-4	6198	-8.98	3.07	0.06
43	SLU 52	18	-4	6838	-11.4	6.15	0.08
43	SLU 53	-111	-5	6666	-6.62	1.53	0.05
43	SLU 54	-41	-4	6822	-9.56	4.1	0.07
43	SLU 55	10	-4	6876	-11.45	5.9	0.08
43	SLU 56	-119	-5	6704	-6.67	1.27	0.05
43	SLU 57	-49	-4	6860	-9.61	3.84	0.07
43	SLU 58	-115	-5	6654	-6.6	1.36	0.05
43	SLU 59	-45	-4	6810	-9.54	3.93	0.07
43	SLU 60	-94	-5	6841	-6.74	2.24	0.06
43	SLU 61	-24	-5	6996	-9.68	4.81	0.07
43	SLU 62	-102	-5	6879	-6.79	1.98	0.06
43	SLU 63	-33	-5	7034	-9.73	4.55	0.07
43	SLU 64	-115	-5	6521	-6.5	1.27	0.05
43	SLU 65	1	-4	6781	-11.39	5.55	0.08
43	SLU 66	-127	-5	6609	-6.61	0.93	0.05
43	SLU 67	-57	-4	6765	-9.55	3.5	0.07
43	SLU 68	-7	-4	6819	-11.44	5.3	0.08
43	SLU 69	-135	-5	6647	-6.67	0.67	0.05
43	SLU 70	-66	-4	6803	-9.6	3.24	0.07
43	SLU 71	-131	-5	6597	-6.6	0.76	0.05
43	SLU 72	-62	-4	6753	-9.54	3.33	0.07
43	SLU 73	11	-4	7392	-11.96	6.41	0.08
43	SLU 74	-117	-6	7221	-7.18	1.79	0.06
43	SLU 75	-48	-5	7376	-10.12	4.36	0.07
43	SLU 76	3	-4	7430	-12.01	6.16	0.08
43	SLU 77	-126	-6	7259	-7.23	1.53	0.06
43	SLU 78	-56	-5	7414	-10.17	4.1	0.07
43	SLU 79	-122	-6	7209	-7.16	1.62	0.06
43	SLU 80	-52	-5	7365	-10.1	4.19	0.07
43	SLU 81	-101	-6	7395	-7.3	2.5	0.06
43	SLU 82	-31	-5	7551	-10.24	5.07	0.07
43	SLU 83	-109	-6	7433	-7.35	2.24	0.06
43	SLU 84	-40	-5	7589	-10.29	4.81	0.07
43	SLE RA 1	-87	-4	4895	-4.87	0.92	0.04
43	SLE RA 2	-9	-3	5067	-8.14	3.77	0.06
43	SLE RA 3	-95	-4	4953	-4.95	0.69	0.04
43	SLE RA 4	-49	-3	5057	-6.91	2.4	0.05
43	SLE RA 5	-15	-3	5093	-8.17	3.6	0.06
43	SLE RA 6	-100	-4	4978	-4.99	0.52	0.04
43	SLE RA 7	-54	-3	5082	-6.95	2.23	0.05
43	SLE RA 8	-98	-4	4945	-4.94	0.58	0.04
43	SLE RA 9	-51	-3	5049	-6.9	2.29	0.05
43	SLE RA 10	-3	-3	5475	-8.51	4.35	0.06
43	SLE RA 11	-89	-4	5361	-5.33	1.26	0.04
43	SLE RA 12	-42	-4	5464	-7.29	2.98	0.05

Nodo	Cont.	Reazione a traslazione			Reazione a rotazione		
Ind.	N.br.	x	y	z	x	y	z
43	SLE RA 13	-8	-3	5500	-8.55	4.18	0.06
43	SLE RA 14	-94	-4	5386	-5.36	1.09	0.04
43	SLE RA 15	-48	-4	5490	-7.32	2.81	0.05
43	SLE RA 16	-91	-4	5353	-5.32	1.15	0.04
43	SLE RA 17	-45	-4	5457	-7.28	2.87	0.05
43	SLE RA 18	-78	-4	5477	-5.41	1.74	0.04
43	SLE RA 19	-31	-4	5581	-7.37	3.45	0.05
43	SLE RA 20	-83	-4	5502	-5.45	1.57	0.04
43	SLE RA 21	-37	-4	5606	-7.4	3.28	0.05
43	SLE FR 1	-87	-4	4895	-4.87	0.92	0.04
43	SLE FR 2	-71	-4	4929	-5.53	1.49	0.04
43	SLE FR 3	-89	-4	4905	-4.89	0.85	0.04
43	SLE FR 4	-69	-4	5104	-5.69	1.74	0.04
43	SLE FR 5	-86	-4	5079	-5.05	1.1	0.04
43	SLE FR 6	-82	-4	5186	-5.14	1.33	0.04
43	SLE QP 1	-87	-4	4895	-4.87	0.92	0.04
43	SLE QP 2	-84	-4	5069	-5.03	1.16	0.04
43	SLD 1	372	-16	6465	-3.58	18.7	-0.08
43	SLD 2	372	-16	6465	-3.58	18.7	-0.08
43	SLD 3	473	-19	5874	3.59	22.1	-0.14
43	SLD 4	473	-19	5874	3.59	22.1	-0.14
43	SLD 5	-100	-2	6385	-15.47	1.26	0.08
43	SLD 6	-100	-2	6385	-15.47	1.26	0.08
43	SLD 7	236	-14	4414	8.43	12.61	-0.09
43	SLD 8	236	-14	4414	8.43	12.61	-0.09
43	SLD 9	-404	6	5725	-18.5	-10.28	0.17
43	SLD 10	-404	6	5725	-18.5	-10.28	0.17
43	SLD 11	-68	-6	3754	5.4	1.07	0
43	SLD 12	-68	-6	3754	5.4	1.07	0
43	SLD 13	-641	11	4265	-13.66	-19.77	0.22
43	SLD 14	-641	11	4265	-13.66	-19.77	0.22
43	SLD 15	-540	8	3674	-6.49	-16.37	0.17
43	SLD 16	-540	8	3674	-6.49	-16.37	0.17
43	SLV 1	977	-31	8345	-2	41.9	-0.25
43	SLV 2	977	-31	8345	-2	41.9	-0.25
43	SLV 3	1223	-40	6945	15.93	50.29	-0.37
43	SLV 4	1223	-40	6945	15.93	50.29	-0.37
43	SLV 5	-139	1	8175	-31.32	0.65	0.15
43	SLV 6	-139	1	8175	-31.32	0.65	0.15
43	SLV 7	681	-28	3509	28.45	28.64	-0.28
43	SLV 8	681	-28	3509	28.45	28.64	-0.28
43	SLV 9	-849	20	6630	-38.52	-26.31	0.36
43	SLV 10	-849	20	6630	-38.52	-26.31	0.36
43	SLV 11	-29	-9	1963	21.25	1.68	-0.06
43	SLV 12	-29	-9	1963	21.25	1.68	-0.06
43	SLV 13	-1391	32	3193	-26	-47.97	0.46
43	SLV 14	-1391	32	3193	-26	-47.97	0.46
43	SLV 15	-1145	23	1793	-8.07	-39.57	0.33
43	SLV 16	-1145	23	1793	-8.07	-39.57	0.33
44	SLU 1	-307	12	4034	-10.49	-10.8	-0.05
44	SLU 2	-207	18	4229	-18.82	-7.56	-0.07
44	SLU 3	-323	12	4104	-10.76	-11.33	-0.05
44	SLU 4	-263	16	4221	-15.75	-9.39	-0.06
44	SLU 5	-217	18	4260	-18.94	-7.88	-0.07
44	SLU 6	-333	12	4134	-10.87	-11.65	-0.05
44	SLU 7	-273	16	4252	-15.87	-9.71	-0.06
44	SLU 8	-326	12	4095	-10.73	-11.43	-0.05
44	SLU 9	-267	16	4212	-15.72	-9.49	-0.06
44	SLU 10	-229	19	4755	-20.11	-8.42	-0.08
44	SLU 11	-345	14	4629	-12.05	-12.19	-0.06
44	SLU 12	-286	17	4747	-17.04	-10.25	-0.07
44	SLU 13	-239	20	4785	-20.23	-8.74	-0.08
44	SLU 14	-355	14	4660	-12.16	-12.5	-0.06
44	SLU 15	-295	17	4777	-17.16	-10.56	-0.07
44	SLU 16	-349	14	4621	-12.02	-12.28	-0.06
44	SLU 17	-289	17	4738	-17.01	-10.34	-0.07
44	SLU 18	-339	14	4785	-12.34	-12.02	-0.06
44	SLU 19	-279	18	4902	-17.33	-10.08	-0.07
44	SLU 20	-348	14	4815	-12.45	-12.34	-0.06
44	SLU 21	-289	18	4932	-17.45	-10.4	-0.07
44	SLU 22	-342	13	4504	-11.76	-12.07	-0.06
44	SLU 23	-243	19	4700	-20.09	-8.83	-0.08
44	SLU 24	-359	14	4574	-12.03	-12.6	-0.06
44	SLU 25	-299	17	4692	-17.02	-10.66	-0.07
44	SLU 26	-252	19	4730	-20.21	-9.15	-0.08
44	SLU 27	-368	14	4605	-12.14	-12.91	-0.06
44	SLU 28	-309	17	4722	-17.14	-10.97	-0.07
44	SLU 29	-362	14	4565	-12	-12.69	-0.06
44	SLU 30	-302	17	4683	-16.99	-10.75	-0.07
44	SLU 31	-265	21	5225	-21.38	-9.69	-0.08
44	SLU 32	-381	15	5100	-13.32	-13.46	-0.06
44	SLU 33	-321	19	5217	-18.31	-11.52	-0.08
44	SLU 34	-275	21	5256	-21.5	-10	-0.08
44	SLU 35	-391	15	5130	-13.44	-13.77	-0.06
44	SLU 36	-331	19	5248	-18.43	-11.83	-0.08
44	SLU 37	-384	15	5091	-13.29	-13.55	-0.06
44	SLU 38	-324	19	5208	-18.28	-11.61	-0.08
44	SLU 39	-374	16	5255	-13.61	-13.29	-0.06
44	SLU 40	-314	19	5372	-18.6	-11.35	-0.08
44	SLU 41	-384	16	5286	-13.72	-13.6	-0.07

Nodo	Cont.	Reazione a traslazione			Reazione a rotazione		
Ind.	N.br.	x	y	z	x	y	z
44	SLU 42	-324	19	5403	-18.72	-11.66	-0.08
44	SLU 43	-387	15	5083	-13.2	-13.6	-0.06
44	SLU 44	-287	21	5278	-21.53	-10.37	-0.08
44	SLU 45	-403	15	5153	-13.47	-14.14	-0.06
44	SLU 46	-343	19	5270	-18.46	-12.2	-0.08
44	SLU 47	-297	21	5309	-21.65	-10.68	-0.08
44	SLU 48	-413	15	5183	-13.59	-14.45	-0.06
44	SLU 49	-353	19	5301	-18.58	-12.51	-0.08
44	SLU 50	-406	15	5144	-13.44	-14.23	-0.06
44	SLU 51	-346	19	5261	-18.43	-12.29	-0.08
44	SLU 52	-309	22	5804	-22.82	-11.23	-0.09
44	SLU 53	-425	17	5678	-14.76	-14.99	-0.07
44	SLU 54	-365	20	5796	-19.76	-13.05	-0.08
44	SLU 55	-319	23	5834	-22.94	-11.54	-0.09
44	SLU 56	-435	17	5709	-14.88	-15.31	-0.07
44	SLU 57	-375	21	5826	-19.87	-13.37	-0.08
44	SLU 58	-429	17	5669	-14.73	-15.09	-0.07
44	SLU 59	-369	20	5787	-19.72	-13.15	-0.08
44	SLU 60	-419	17	5833	-15.05	-14.83	-0.07
44	SLU 61	-359	21	5951	-20.04	-12.89	-0.08
44	SLU 62	-428	17	5864	-15.16	-15.14	-0.07
44	SLU 63	-368	21	5981	-20.16	-13.2	-0.08
44	SLU 64	-422	17	5553	-14.47	-14.87	-0.07
44	SLU 65	-323	22	5749	-22.8	-11.64	-0.09
44	SLU 66	-439	17	5623	-14.74	-15.4	-0.07
44	SLU 67	-379	20	5741	-19.74	-13.46	-0.08
44	SLU 68	-332	23	5779	-22.92	-11.95	-0.09
44	SLU 69	-448	17	5654	-14.86	-15.72	-0.07
44	SLU 70	-388	20	5771	-19.85	-13.78	-0.08
44	SLU 71	-442	17	5614	-14.71	-15.5	-0.07
44	SLU 72	-382	20	5732	-19.7	-13.56	-0.08
44	SLU 73	-345	24	6274	-24.09	-12.49	-0.1
44	SLU 74	-461	18	6149	-16.03	-16.26	-0.08
44	SLU 75	-401	22	6266	-21.03	-14.32	-0.09
44	SLU 76	-355	24	6305	-24.21	-12.81	-0.1
44	SLU 77	-471	18	6179	-16.15	-16.58	-0.08
44	SLU 78	-411	22	6297	-21.14	-14.64	-0.09
44	SLU 79	-464	18	6140	-16	-16.36	-0.08
44	SLU 80	-404	22	6257	-21	-14.42	-0.09
44	SLU 81	-454	19	6304	-16.32	-16.09	-0.08
44	SLU 82	-394	22	6421	-21.31	-14.15	-0.09
44	SLU 83	-464	19	6334	-16.44	-16.41	-0.08
44	SLU 84	-404	22	6452	-21.43	-14.47	-0.09
44	SLE RA 1	-317	12	4168	-10.85	-11.16	-0.05
44	SLE RA 2	-251	16	4299	-16.41	-9	-0.07
44	SLE RA 3	-328	13	4215	-11.03	-11.52	-0.05
44	SLE RA 4	-288	15	4293	-14.36	-10.22	-0.06
44	SLE RA 5	-257	16	4319	-16.48	-9.21	-0.07
44	SLE RA 6	-334	13	4235	-11.11	-11.73	-0.05
44	SLE RA 7	-294	15	4314	-14.44	-10.43	-0.06
44	SLE RA 8	-330	13	4209	-11.01	-11.58	-0.05
44	SLE RA 9	-290	15	4287	-14.34	-10.29	-0.06
44	SLE RA 10	-265	17	4649	-17.27	-9.58	-0.07
44	SLE RA 11	-343	14	4565	-11.89	-12.09	-0.06
44	SLE RA 12	-303	16	4644	-15.22	-10.79	-0.06
44	SLE RA 13	-272	17	4669	-17.34	-9.79	-0.07
44	SLE RA 14	-349	14	4586	-11.97	-12.3	-0.06
44	SLE RA 15	-309	16	4664	-15.3	-11	-0.06
44	SLE RA 16	-345	14	4559	-11.87	-12.15	-0.06
44	SLE RA 17	-305	16	4638	-15.2	-10.86	-0.06
44	SLE RA 18	-338	14	4669	-12.08	-11.98	-0.06
44	SLE RA 19	-298	16	4747	-15.41	-10.68	-0.07
44	SLE RA 20	-345	14	4689	-12.16	-12.19	-0.06
44	SLE RA 21	-305	16	4767	-15.49	-10.89	-0.07
44	SLE FR 1	-317	12	4168	-10.85	-11.16	-0.05
44	SLE FR 2	-304	13	4194	-11.96	-10.73	-0.05
44	SLE FR 3	-320	12	4176	-10.89	-11.24	-0.05
44	SLE FR 4	-310	14	4344	-12.33	-10.97	-0.06
44	SLE FR 5	-326	13	4327	-11.25	-11.49	-0.05
44	SLE FR 6	-328	13	4418	-11.47	-11.57	-0.05
44	SLE QP 1	-317	12	4168	-10.85	-11.16	-0.05
44	SLE QP 2	-323	13	4318	-11.22	-11.4	-0.05
44	SLD 1	115	10	5285	-22.96	2.23	-0.04
44	SLD 2	115	10	5285	-22.96	2.23	-0.04
44	SLD 3	221	-1	4859	-10.38	5.67	0
44	SLD 4	221	-1	4859	-10.38	5.67	0
44	SLD 5	-353	28	5255	-33.82	-12.52	-0.11
44	SLD 6	-353	28	5255	-33.82	-12.52	-0.11
44	SLD 7	1	-7	3834	8.1	-1.07	0.02
44	SLD 8	1	-7	3834	8.1	-1.07	0.02
44	SLD 9	-648	33	4803	-30.55	-21.74	-0.13
44	SLD 10	-648	33	4803	-30.55	-21.74	-0.13
44	SLD 11	-294	-2	3382	11.37	-10.29	0
44	SLD 12	-294	-2	3382	11.37	-10.29	0
44	SLD 13	-868	26	3778	-12.07	-28.48	-0.1
44	SLD 14	-868	26	3778	-12.07	-28.48	-0.1
44	SLD 15	-762	16	3351	0.51	-25.04	-0.07
44	SLD 16	-762	16	3351	0.51	-25.04	-0.07
44	SLV 1	695	6	6587	-40.18	20.27	-0.02
44	SLV 2	695	6	6587	-40.18	20.27	-0.02

Nodo	Cont.	Reazione a traslazione			Reazione a rotazione		
Ind.	N.br.	x	y	z	x	y	z
44	SLV 3	953	-20	5580	-8.69	28.61	0.07
44	SLV 4	953	-20	5580	-8.69	28.61	0.07
44	SLV 5	-409	50	6527	-67.67	-14.55	-0.19
44	SLV 6	-409	50	6527	-67.67	-14.55	-0.19
44	SLV 7	451	-36	3169	37.3	13.25	0.13
44	SLV 8	451	-36	3169	37.3	13.25	0.13
44	SLV 9	-1097	62	5468	-59.74	-36.06	-0.24
44	SLV 10	-1097	62	5468	-59.74	-36.06	-0.24
44	SLV 11	-238	-25	2110	45.22	-8.26	0.08
44	SLV 12	-238	-25	2110	45.22	-8.26	0.08
44	SLV 13	-1600	45	3057	-13.76	-51.42	-0.18
44	SLV 14	-1600	45	3057	-13.76	-51.42	-0.18
44	SLV 15	-1342	19	2049	17.73	-43.08	-0.08
44	SLV 16	-1342	19	2049	17.73	-43.08	-0.08
45	SLU 1	-244	21	3420	-15.63	-1	-0.29
45	SLU 2	-157	30	3565	-26.91	2.45	-0.42
45	SLU 3	-258	21	3475	-16.03	-1.31	-0.29
45	SLU 4	-206	27	3562	-22.79	0.76	-0.37
45	SLU 5	-166	30	3589	-27.08	2.21	-0.42
45	SLU 6	-267	22	3499	-16.2	-1.55	-0.3
45	SLU 7	-214	27	3586	-22.97	0.52	-0.38
45	SLU 8	-262	21	3468	-15.98	-1.48	-0.29
45	SLU 9	-209	26	3555	-22.75	0.59	-0.37
45	SLU 10	-175	32	4013	-28.85	2.8	-0.46
45	SLU 11	-276	24	3923	-17.97	-0.96	-0.33
45	SLU 12	-224	29	4010	-24.73	1.11	-0.41
45	SLU 13	-184	32	4037	-29.02	2.56	-0.46
45	SLU 14	-285	24	3947	-18.14	-1.2	-0.33
45	SLU 15	-232	29	4034	-24.91	0.87	-0.41
45	SLU 16	-280	24	3917	-17.93	-1.12	-0.33
45	SLU 17	-227	29	4004	-24.69	0.94	-0.41
45	SLU 18	-270	25	4060	-18.4	-0.5	-0.34
45	SLU 19	-217	30	4147	-25.17	1.57	-0.42
45	SLU 20	-278	25	4084	-18.58	-0.74	-0.34
45	SLU 21	-226	30	4171	-25.35	1.33	-0.42
45	SLU 22	-273	23	3815	-17.53	-1.09	-0.32
45	SLU 23	-186	32	3960	-28.81	2.36	-0.45
45	SLU 24	-287	24	3870	-17.93	-1.4	-0.33
45	SLU 25	-235	29	3957	-24.69	0.67	-0.41
45	SLU 26	-195	32	3984	-28.99	2.12	-0.46
45	SLU 27	-296	24	3894	-18.11	-1.64	-0.33
45	SLU 28	-244	29	3981	-24.87	0.43	-0.41
45	SLU 29	-291	24	3864	-17.89	-1.57	-0.33
45	SLU 30	-239	29	3951	-24.65	0.5	-0.41
45	SLU 31	-204	35	4408	-30.75	2.71	-0.49
45	SLU 32	-305	27	4318	-19.87	-1.05	-0.36
45	SLU 33	-253	32	4405	-26.63	1.02	-0.44
45	SLU 34	-213	35	4432	-30.93	2.47	-0.49
45	SLU 35	-314	27	4343	-20.05	-1.29	-0.37
45	SLU 36	-262	32	4429	-26.81	0.78	-0.45
45	SLU 37	-309	27	4312	-19.83	-1.21	-0.36
45	SLU 38	-257	32	4399	-26.59	0.86	-0.44
45	SLU 39	-299	27	4455	-20.31	-0.59	-0.37
45	SLU 40	-247	32	4542	-27.07	1.48	-0.45
45	SLU 41	-308	27	4480	-20.48	-0.82	-0.38
45	SLU 42	-256	33	4567	-27.25	1.25	-0.46
45	SLU 43	-307	26	4310	-19.67	-1.27	-0.36
45	SLU 44	-220	35	4455	-30.94	2.18	-0.49
45	SLU 45	-321	27	4365	-20.06	-1.58	-0.37
45	SLU 46	-269	32	4452	-26.83	0.49	-0.45
45	SLU 47	-229	35	4479	-31.12	1.94	-0.5
45	SLU 48	-330	27	4390	-20.24	-1.82	-0.37
45	SLU 49	-278	32	4477	-27	0.25	-0.45
45	SLU 50	-325	27	4359	-20.02	-1.75	-0.37
45	SLU 51	-272	32	4446	-26.79	0.32	-0.45
45	SLU 52	-238	38	4903	-32.88	2.53	-0.53
45	SLU 53	-339	29	4814	-22	-1.23	-0.4
45	SLU 54	-287	35	4900	-28.77	0.84	-0.48
45	SLU 55	-247	38	4928	-33.06	2.29	-0.53
45	SLU 56	-348	30	4838	-22.18	-1.47	-0.41
45	SLU 57	-296	35	4925	-28.95	0.6	-0.49
45	SLU 58	-343	29	4807	-21.96	-1.4	-0.4
45	SLU 59	-290	35	4894	-28.73	0.67	-0.48
45	SLU 60	-333	30	4951	-22.44	-0.77	-0.41
45	SLU 61	-280	35	5038	-29.2	1.3	-0.49
45	SLU 62	-341	30	4975	-22.62	-1.01	-0.41
45	SLU 63	-289	35	5062	-29.38	1.06	-0.49
45	SLU 64	-337	29	4706	-21.57	-1.36	-0.39
45	SLU 65	-250	37	4850	-32.85	2.09	-0.53
45	SLU 66	-350	29	4761	-21.97	-1.67	-0.4
45	SLU 67	-298	35	4847	-28.73	0.4	-0.48
45	SLU 68	-258	38	4875	-33.02	1.85	-0.53
45	SLU 69	-359	30	4785	-22.14	-1.91	-0.41
45	SLU 70	-307	35	4872	-28.91	0.16	-0.49
45	SLU 71	-354	29	4754	-21.92	-1.84	-0.4
45	SLU 72	-302	34	4841	-28.69	0.23	-0.48
45	SLU 73	-268	40	5299	-34.79	2.44	-0.56
45	SLU 74	-368	32	5209	-23.91	-1.32	-0.44
45	SLU 75	-316	37	5296	-30.67	0.75	-0.52
45	SLU 76	-276	40	5323	-34.96	2.2	-0.57

Nodo	Cont.	Reazione a traslazione			Reazione a rotazione		
Ind.	N.br.	x	y	z	x	y	z
45	SLU 77	-377	32	5233	-24.08	-1.56	-0.44
45	SLU 78	-325	37	5320	-30.85	0.51	-0.52
45	SLU 79	-372	32	5202	-23.87	-1.48	-0.44
45	SLU 80	-320	37	5289	-30.63	0.59	-0.52
45	SLU 81	-362	33	5346	-24.34	-0.86	-0.45
45	SLU 82	-310	38	5433	-31.11	1.21	-0.53
45	SLU 83	-371	33	5370	-24.52	-1.09	-0.45
45	SLU 84	-319	38	5457	-31.28	0.98	-0.53
45	SLE RA 1	-252	22	3533	-16.17	-1.03	-0.3
45	SLE RA 2	-194	27	3629	-23.69	1.27	-0.38
45	SLE RA 3	-262	22	3569	-16.44	-1.24	-0.3
45	SLE RA 4	-227	25	3627	-20.95	0.14	-0.35
45	SLE RA 5	-200	28	3646	-23.81	1.11	-0.39
45	SLE RA 6	-268	22	3586	-16.56	-1.39	-0.3
45	SLE RA 7	-233	26	3644	-21.07	-0.01	-0.36
45	SLE RA 8	-264	22	3565	-16.41	-1.34	-0.3
45	SLE RA 9	-229	25	3623	-20.92	0.04	-0.35
45	SLE RA 10	-206	29	3928	-24.98	1.51	-0.41
45	SLE RA 11	-274	24	3868	-17.73	-1	-0.32
45	SLE RA 12	-239	27	3926	-22.24	0.38	-0.38
45	SLE RA 13	-212	29	3944	-25.1	1.35	-0.41
45	SLE RA 14	-280	24	3884	-17.85	-1.16	-0.33
45	SLE RA 15	-245	27	3942	-22.36	0.22	-0.38
45	SLE RA 16	-276	24	3864	-17.7	-1.11	-0.32
45	SLE RA 17	-241	27	3922	-22.21	0.27	-0.38
45	SLE RA 18	-269	24	3960	-18.02	-0.69	-0.33
45	SLE RA 19	-235	28	4018	-22.53	0.69	-0.38
45	SLE RA 20	-275	24	3976	-18.14	-0.85	-0.33
45	SLE RA 21	-241	28	4034	-22.65	0.53	-0.39
45	SLE FR 1	-252	22	3533	-16.17	-1.03	-0.3
45	SLE FR 2	-241	23	3552	-17.68	-0.57	-0.31
45	SLE FR 3	-255	22	3539	-16.22	-1.09	-0.3
45	SLE FR 4	-246	24	3680	-18.23	-0.47	-0.32
45	SLE FR 5	-260	22	3667	-16.78	-0.99	-0.31
45	SLE FR 6	-261	23	3746	-17.1	-0.86	-0.31
45	SLE QP 1	-252	22	3533	-16.17	-1.03	-0.3
45	SLE QP 2	-258	22	3661	-16.73	-0.93	-0.31
45	SLD 1	244	38	4312	-31.97	18.95	-0.53
45	SLD 2	244	38	4312	-31.97	18.95	-0.53
45	SLD 3	338	22	3996	-14.69	22.06	-0.3
45	SLD 4	338	22	3996	-14.69	22.06	-0.3
45	SLD 5	-250	50	4335	-47.52	0.32	-0.72
45	SLD 6	-250	50	4335	-47.52	0.32	-0.72
45	SLD 7	64	-1	3282	10.1	10.68	0.04
45	SLD 8	64	-1	3282	10.1	10.68	0.04
45	SLD 9	-579	46	4039	-43.56	-12.54	-0.65
45	SLD 10	-579	46	4039	-43.56	-12.54	-0.65
45	SLD 11	-265	-6	2987	14.06	-2.17	0.1
45	SLD 12	-265	-6	2987	14.06	-2.17	0.1
45	SLD 13	-853	22	3326	-18.77	-23.91	-0.31
45	SLD 14	-853	22	3326	-18.77	-23.91	-0.31
45	SLD 15	-759	7	3010	-1.48	-20.8	-0.09
45	SLD 16	-759	7	3010	-1.48	-20.8	-0.09
45	SLV 1	909	60	5191	-54.44	45.26	-0.85
45	SLV 2	909	60	5191	-54.44	45.26	-0.85
45	SLV 3	1139	21	4441	-11.11	53.04	-0.28
45	SLV 4	1139	21	4441	-11.11	53.04	-0.28
45	SLV 5	-256	91	5258	-93.75	1.13	-1.33
45	SLV 6	-256	91	5258	-93.75	1.13	-1.33
45	SLV 7	510	-36	2757	50.67	27.07	0.56
45	SLV 8	510	-36	2757	50.67	27.07	0.56
45	SLV 9	-1025	80	4565	-84.12	-28.92	-1.17
45	SLV 10	-1025	80	4565	-84.12	-28.92	-1.17
45	SLV 11	-259	-47	2064	60.3	-2.98	0.71
45	SLV 12	-259	-47	2064	60.3	-2.98	0.71
45	SLV 13	-1654	23	2881	-22.34	-54.9	-0.33
45	SLV 14	-1654	23	2881	-22.34	-54.9	-0.33
45	SLV 15	-1424	-15	2131	20.98	-47.11	0.23
45	SLV 16	-1424	-15	2131	20.98	-47.11	0.23
46	SLU 1	-275	26	2920	-18.91	-11.46	0.01
46	SLU 2	-195	37	3026	-32.48	-8.63	0.01
46	SLU 3	-289	27	2963	-19.39	-12	0.01
46	SLU 4	-242	33	3027	-27.53	-10.3	0.01
46	SLU 5	-204	37	3046	-32.69	-8.96	0.01
46	SLU 6	-299	27	2982	-19.61	-12.33	0.01
46	SLU 7	-251	34	3046	-27.75	-10.63	0.01
46	SLU 8	-293	26	2958	-19.35	-12.12	0.01
46	SLU 9	-245	33	3022	-27.48	-10.42	0.01
46	SLU 10	-221	40	3411	-34.83	-9.77	0.01
46	SLU 11	-315	30	3347	-21.75	-13.14	0.01
46	SLU 12	-267	36	3411	-29.89	-11.44	0.01
46	SLU 13	-230	41	3430	-35.05	-10.1	0.01
46	SLU 14	-324	30	3366	-21.96	-13.47	0.01
46	SLU 15	-276	37	3430	-30.1	-11.77	0.01
46	SLU 16	-319	30	3343	-21.7	-13.27	0.01
46	SLU 17	-271	36	3407	-29.84	-11.57	0.01
46	SLU 18	-312	31	3469	-22.28	-13.1	0.01
46	SLU 19	-264	37	3533	-30.42	-11.4	0.01
46	SLU 20	-321	31	3488	-22.5	-13.43	0.01
46	SLU 21	-273	38	3552	-30.63	-11.73	0.01

Nodo	Cont.	Reazione a traslazione			Reazione a rotazione		
Ind.	N.br.	x	y	z	x	y	z
46	SLU 22	-311	29	3253	-21.22	-12.96	0.01
46	SLU 23	-231	40	3360	-34.78	-10.12	0.01
46	SLU 24	-325	30	3296	-21.7	-13.49	0.01
46	SLU 25	-277	36	3360	-29.83	-11.79	0.01
46	SLU 26	-240	41	3379	-35	-10.45	0.01
46	SLU 27	-334	30	3315	-21.91	-13.83	0.01
46	SLU 28	-287	37	3379	-30.05	-12.13	0.01
46	SLU 29	-329	30	3292	-21.65	-13.62	0.01
46	SLU 30	-281	36	3356	-29.79	-11.92	0.01
46	SLU 31	-257	44	3744	-37.14	-11.27	0.01
46	SLU 32	-351	33	3681	-24.05	-14.64	0.01
46	SLU 33	-303	40	3745	-32.19	-12.94	0.01
46	SLU 34	-266	44	3763	-37.36	-11.6	0.01
46	SLU 35	-360	33	3700	-24.27	-14.97	0.01
46	SLU 36	-312	40	3764	-32.41	-13.27	0.01
46	SLU 37	-355	33	3676	-24.01	-14.77	0.01
46	SLU 38	-307	40	3740	-32.15	-13.07	0.01
46	SLU 39	-348	34	3803	-24.59	-14.59	0.01
46	SLU 40	-300	40	3867	-32.72	-12.89	0.01
46	SLU 41	-357	34	3822	-24.8	-14.92	0.01
46	SLU 42	-309	41	3886	-32.94	-13.22	0.01
46	SLU 43	-345	33	3682	-23.8	-14.38	0.01
46	SLU 44	-266	44	3788	-37.36	-11.55	0.01
46	SLU 45	-360	33	3725	-24.27	-14.92	0.01
46	SLU 46	-312	40	3788	-32.41	-13.22	0.01
46	SLU 47	-275	44	3807	-37.58	-11.88	0.01
46	SLU 48	-369	33	3744	-24.49	-15.25	0.01
46	SLU 49	-321	40	3808	-32.63	-13.55	0.01
46	SLU 50	-364	33	3720	-24.23	-15.05	0.01
46	SLU 51	-316	40	3784	-32.37	-13.35	0.01
46	SLU 52	-291	47	4173	-39.72	-12.7	0.01
46	SLU 53	-385	36	4109	-26.63	-16.07	0.01
46	SLU 54	-337	43	4173	-34.77	-14.37	0.01
46	SLU 55	-300	47	4192	-39.93	-13.03	0.02
46	SLU 56	-394	37	4128	-26.85	-16.4	0.01
46	SLU 57	-346	43	4192	-34.99	-14.7	0.01
46	SLU 58	-389	36	4104	-26.59	-16.19	0.01
46	SLU 59	-341	43	4168	-34.72	-14.49	0.01
46	SLU 60	-382	37	4231	-27.16	-16.02	0.01
46	SLU 61	-334	44	4295	-35.3	-14.32	0.01
46	SLU 62	-391	37	4250	-27.38	-16.35	0.01
46	SLU 63	-343	44	4314	-35.52	-14.65	0.01
46	SLU 64	-381	36	4015	-26.1	-15.88	0.01
46	SLU 65	-301	47	4122	-39.67	-13.05	0.01
46	SLU 66	-396	36	4058	-26.58	-16.42	0.01
46	SLU 67	-348	43	4122	-34.72	-14.72	0.01
46	SLU 68	-311	47	4141	-39.88	-13.38	0.02
46	SLU 69	-405	37	4077	-26.8	-16.75	0.01
46	SLU 70	-357	43	4141	-34.93	-15.05	0.01
46	SLU 71	-400	36	4053	-26.53	-16.55	0.01
46	SLU 72	-352	43	4117	-34.67	-14.85	0.01
46	SLU 73	-327	50	4506	-42.02	-14.19	0.02
46	SLU 74	-421	40	4442	-28.94	-17.56	0.01
46	SLU 75	-373	46	4506	-37.08	-15.86	0.01
46	SLU 76	-336	50	4525	-42.24	-14.52	0.02
46	SLU 77	-430	40	4462	-29.15	-17.9	0.01
46	SLU 78	-382	47	4525	-37.29	-16.2	0.01
46	SLU 79	-425	40	4438	-28.89	-17.69	0.01
46	SLU 80	-377	46	4502	-37.03	-15.99	0.01
46	SLU 81	-418	40	4564	-29.47	-17.52	0.01
46	SLU 82	-370	47	4628	-37.61	-15.82	0.01
46	SLU 83	-427	41	4584	-29.69	-17.85	0.01
46	SLU 84	-379	47	4647	-37.82	-16.15	0.01
46	SLE RA 1	-285	27	3015	-19.57	-11.89	0.01
46	SLE RA 2	-232	34	3086	-28.61	-10	0.01
46	SLE RA 3	-295	27	3044	-19.89	-12.25	0.01
46	SLE RA 4	-263	32	3086	-25.32	-11.11	0.01
46	SLE RA 5	-238	34	3099	-28.76	-10.22	0.01
46	SLE RA 6	-301	27	3057	-20.03	-12.47	0.01
46	SLE RA 7	-269	32	3099	-25.46	-11.33	0.01
46	SLE RA 8	-298	27	3041	-19.86	-12.33	0.01
46	SLE RA 9	-266	32	3083	-25.29	-11.2	0.01
46	SLE RA 10	-249	36	3343	-30.19	-10.76	0.01
46	SLE RA 11	-312	29	3300	-21.46	-13.01	0.01
46	SLE RA 12	-280	34	3343	-26.89	-11.88	0.01
46	SLE RA 13	-255	37	3355	-30.33	-10.98	0.01
46	SLE RA 14	-318	30	3313	-21.61	-13.23	0.01
46	SLE RA 15	-286	34	3355	-27.03	-12.1	0.01
46	SLE RA 16	-315	29	3297	-21.43	-13.09	0.01
46	SLE RA 17	-283	34	3340	-26.86	-11.96	0.01
46	SLE RA 18	-310	30	3381	-21.82	-12.98	0.01
46	SLE RA 19	-278	34	3424	-27.24	-11.84	0.01
46	SLE RA 20	-316	30	3394	-21.96	-13.2	0.01
46	SLE RA 21	-284	35	3437	-27.39	-12.07	0.01
46	SLE FR 1	-285	27	3015	-19.57	-11.89	0.01
46	SLE FR 2	-275	28	3029	-21.38	-11.51	0.01
46	SLE FR 3	-288	27	3020	-19.63	-11.98	0.01
46	SLE FR 4	-282	29	3139	-22.05	-11.84	0.01
46	SLE FR 5	-295	28	3130	-20.3	-12.3	0.01
46	SLE FR 6	-298	28	3198	-20.69	-12.43	0.01

Nodo	Cont.	Reazione a traslazione			Reazione a rotazione		
Ind.	N.br.	x	y	z	x	y	z
46	SLE QP 1	-285	27	3015	-19.57	-11.89	0.01
46	SLE QP 2	-293	28	3125	-20.25	-12.21	0.01
46	SLD 1	265	47	3577	-38.63	7.03	0.02
46	SLD 2	265	47	3577	-38.63	7.03	0.02
46	SLD 3	359	28	3316	-17.73	10.42	0.01
46	SLD 4	359	28	3316	-17.73	10.42	0.01
46	SLD 5	-268	63	3656	-57.46	-11.58	0.03
46	SLD 6	-268	63	3656	-57.46	-11.58	0.03
46	SLD 7	45	-2	2786	12.21	-0.29	-0.01
46	SLD 8	45	-2	2786	12.21	-0.29	-0.01
46	SLD 9	-630	57	3464	-52.7	-24.14	0.02
46	SLD 10	-630	57	3464	-52.7	-24.14	0.02
46	SLD 11	-318	-8	2594	16.97	-12.85	-0.02
46	SLD 12	-318	-8	2594	16.97	-12.85	-0.02
46	SLD 13	-945	28	2935	-22.76	-34.85	0
46	SLD 14	-945	28	2935	-22.76	-34.85	0
46	SLD 15	-851	8	2674	-1.86	-31.46	-0.01
46	SLD 16	-851	8	2674	-1.86	-31.46	-0.01
46	SLV 1	1004	75	4194	-65.66	32.52	0.04
46	SLV 2	1004	75	4194	-65.66	32.52	0.04
46	SLV 3	1236	26	3563	-13.22	40.88	0.01
46	SLV 4	1236	26	3563	-13.22	40.88	0.01
46	SLV 5	-255	116	4403	-113.4	-11.48	0.06
46	SLV 6	-255	116	4403	-113.4	-11.48	0.06
46	SLV 7	517	-47	2300	61.4	16.4	-0.04
46	SLV 8	517	-47	2300	61.4	16.4	-0.04
46	SLV 9	-1103	102	3951	-101.89	-40.83	0.05
46	SLV 10	-1103	102	3951	-101.89	-40.83	0.05
46	SLV 11	-331	-61	1847	72.91	-12.95	-0.05
46	SLV 12	-331	-61	1847	72.91	-12.95	-0.05
46	SLV 13	-1822	29	2687	-27.27	-65.31	0
46	SLV 14	-1822	29	2687	-27.27	-65.31	0
46	SLV 15	-1590	-20	2056	25.17	-56.95	-0.03
46	SLV 16	-1590	-20	2056	25.17	-56.95	-0.03
47	SLU 1	-92	26	2532	-20.96	1.23	0.05
47	SLU 2	-15	39	2614	-36.31	3.96	0.08
47	SLU 3	-102	27	2565	-21.49	1	0.05
47	SLU 4	-56	35	2614	-30.7	2.64	0.07
47	SLU 5	-23	39	2629	-36.54	3.75	0.08
47	SLU 6	-109	27	2580	-21.73	0.78	0.05
47	SLU 7	-63	35	2629	-30.93	2.42	0.07
47	SLU 8	-107	27	2561	-21.44	0.8	0.05
47	SLU 9	-61	35	2611	-30.65	2.44	0.07
47	SLU 10	-20	42	2948	-38.93	4.39	0.09
47	SLU 11	-106	30	2899	-24.12	1.42	0.06
47	SLU 12	-60	38	2948	-33.32	3.06	0.08
47	SLU 13	-27	43	2963	-39.17	4.18	0.09
47	SLU 14	-114	31	2914	-24.35	1.21	0.06
47	SLU 15	-68	38	2963	-33.56	2.85	0.08
47	SLU 16	-111	30	2895	-24.07	1.23	0.06
47	SLU 17	-65	38	2945	-33.27	2.87	0.08
47	SLU 18	-98	31	3009	-24.71	1.84	0.06
47	SLU 19	-52	39	3058	-33.92	3.48	0.08
47	SLU 20	-106	31	3024	-24.95	1.63	0.06
47	SLU 21	-60	39	3073	-34.16	3.27	0.08
47	SLU 22	-107	30	2816	-23.52	1.29	0.06
47	SLU 23	-30	42	2898	-38.87	4.02	0.09
47	SLU 24	-117	30	2849	-24.05	1.05	0.06
47	SLU 25	-71	38	2899	-33.25	2.69	0.08
47	SLU 26	-37	43	2913	-39.1	3.8	0.09
47	SLU 27	-124	31	2864	-24.29	0.84	0.06
47	SLU 28	-78	38	2913	-33.49	2.48	0.08
47	SLU 29	-122	30	2846	-24	0.86	0.06
47	SLU 30	-76	38	2895	-33.21	2.5	0.08
47	SLU 31	-34	46	3232	-41.49	4.45	0.09
47	SLU 32	-121	34	3183	-26.68	1.48	0.07
47	SLU 33	-75	41	3233	-35.88	3.12	0.08
47	SLU 34	-42	46	3247	-41.73	4.23	0.1
47	SLU 35	-128	34	3198	-26.91	1.27	0.07
47	SLU 36	-82	42	3247	-36.12	2.91	0.09
47	SLU 37	-126	34	3180	-26.63	1.29	0.07
47	SLU 38	-80	41	3229	-35.83	2.93	0.08
47	SLU 39	-113	34	3293	-27.27	1.9	0.07
47	SLU 40	-67	42	3343	-36.48	3.54	0.09
47	SLU 41	-120	35	3308	-27.51	1.69	0.07
47	SLU 42	-74	42	3357	-36.72	3.32	0.09
47	SLU 43	-115	33	3194	-26.38	1.58	0.07
47	SLU 44	-38	46	3276	-41.72	4.31	0.09
47	SLU 45	-125	34	3227	-26.9	1.35	0.07
47	SLU 46	-78	41	3276	-36.11	2.99	0.08
47	SLU 47	-45	46	3290	-41.96	4.1	0.1
47	SLU 48	-132	34	3242	-27.14	1.13	0.07
47	SLU 49	-86	42	3291	-36.35	2.77	0.09
47	SLU 50	-130	34	3223	-26.85	1.16	0.07
47	SLU 51	-83	41	3272	-36.06	2.79	0.08
47	SLU 52	-42	49	3610	-44.34	4.74	0.1
47	SLU 53	-129	37	3561	-29.53	1.78	0.07
47	SLU 54	-83	45	3610	-38.73	3.41	0.09
47	SLU 55	-50	49	3624	-44.58	4.53	0.1
47	SLU 56	-136	37	3576	-29.77	1.56	0.08

Nodo	Cont.	Reazione a traslazione			Reazione a rotazione		
Ind.	N.br.	x	y	z	x	y	z
47	SLU 57	-90	45	3625	-38.97	3.2	0.09
47	SLU 58	-134	37	3557	-29.48	1.58	0.07
47	SLU 59	-88	45	3606	-38.68	3.22	0.09
47	SLU 60	-121	38	3671	-30.13	2.19	0.08
47	SLU 61	-75	46	3720	-39.33	3.83	0.09
47	SLU 62	-128	38	3686	-30.37	1.98	0.08
47	SLU 63	-82	46	3735	-39.57	3.62	0.09
47	SLU 64	-129	36	3478	-28.94	1.64	0.07
47	SLU 65	-53	49	3560	-44.28	4.37	0.1
47	SLU 66	-139	37	3511	-29.46	1.4	0.07
47	SLU 67	-93	45	3561	-38.67	3.04	0.09
47	SLU 68	-60	49	3575	-44.52	4.16	0.1
47	SLU 69	-147	37	3526	-29.7	1.19	0.08
47	SLU 70	-101	45	3575	-38.91	2.83	0.09
47	SLU 71	-144	37	3508	-29.41	1.21	0.07
47	SLU 72	-98	45	3557	-38.62	2.85	0.09
47	SLU 73	-57	52	3894	-46.9	4.8	0.11
47	SLU 74	-144	40	3845	-32.09	1.83	0.08
47	SLU 75	-97	48	3895	-41.29	3.47	0.1
47	SLU 76	-64	53	3909	-47.14	4.58	0.11
47	SLU 77	-151	41	3860	-32.33	1.62	0.08
47	SLU 78	-105	48	3909	-41.53	3.26	0.1
47	SLU 79	-149	40	3842	-32.04	1.64	0.08
47	SLU 80	-102	48	3891	-41.24	3.28	0.1
47	SLU 81	-136	41	3955	-32.69	2.25	0.08
47	SLU 82	-89	49	4005	-41.89	3.89	0.1
47	SLU 83	-143	42	3970	-32.93	2.04	0.08
47	SLU 84	-97	49	4019	-42.13	3.67	0.1
47	SLE RA 1	-96	27	2613	-21.7	1.25	0.05
47	SLE RA 2	-45	36	2668	-31.92	3.07	0.07
47	SLE RA 3	-103	28	2635	-22.05	1.09	0.06
47	SLE RA 4	-72	33	2668	-28.18	2.18	0.07
47	SLE RA 5	-50	36	2678	-32.08	2.93	0.07
47	SLE RA 6	-108	28	2645	-22.21	0.95	0.06
47	SLE RA 7	-77	33	2678	-28.34	2.04	0.07
47	SLE RA 8	-106	28	2633	-22.01	0.96	0.06
47	SLE RA 9	-75	33	2666	-28.15	2.06	0.07
47	SLE RA 10	-48	38	2890	-33.67	3.35	0.08
47	SLE RA 11	-106	30	2858	-23.8	1.38	0.06
47	SLE RA 12	-75	35	2891	-29.93	2.47	0.07
47	SLE RA 13	-53	38	2900	-33.83	3.21	0.08
47	SLE RA 14	-111	30	2868	-23.96	1.23	0.06
47	SLE RA 15	-80	35	2900	-30.09	2.33	0.07
47	SLE RA 16	-109	30	2855	-23.76	1.25	0.06
47	SLE RA 17	-78	35	2888	-29.9	2.34	0.07
47	SLE RA 18	-100	31	2931	-24.2	1.66	0.06
47	SLE RA 19	-70	36	2964	-30.33	2.75	0.07
47	SLE RA 20	-105	31	2941	-24.36	1.51	0.06
47	SLE RA 21	-75	36	2974	-30.49	2.61	0.07
47	SLE FR 1	-96	27	2613	-21.7	1.25	0.05
47	SLE FR 2	-86	29	2624	-23.74	1.61	0.06
47	SLE FR 3	-98	27	2617	-21.76	1.19	0.05
47	SLE FR 4	-87	30	2719	-24.49	1.73	0.06
47	SLE FR 5	-100	28	2712	-22.51	1.31	0.06
47	SLE FR 6	-98	29	2772	-22.95	1.45	0.06
47	SLE QP 1	-96	27	2613	-21.7	1.25	0.05
47	SLE QP 2	-98	28	2708	-22.45	1.37	0.06
47	SLD 1	558	50	3065	-43.21	25.01	0.1
47	SLD 2	558	50	3065	-43.21	25.01	0.1
47	SLD 3	650	28	2820	-19.5	28.28	0.05
47	SLD 4	650	28	2820	-19.5	28.28	0.05
47	SLD 5	-41	68	3187	-64.62	3.51	0.14
47	SLD 6	-41	68	3187	-64.62	3.51	0.14
47	SLD 7	267	-5	2370	14.39	14.4	-0.02
47	SLD 8	267	-5	2370	14.39	14.4	-0.02
47	SLD 9	-462	61	3047	-59.28	-11.66	0.13
47	SLD 10	-462	61	3047	-59.28	-11.66	0.13
47	SLD 11	-154	-11	2230	19.73	-0.77	-0.03
47	SLD 12	-154	-11	2230	19.73	-0.77	-0.03
47	SLD 13	-846	29	2597	-25.39	-25.54	0.06
47	SLD 14	-846	29	2597	-25.39	-25.54	0.06
47	SLD 15	-753	7	2352	-1.69	-22.27	0.01
47	SLD 16	-753	7	2352	-1.69	-22.27	0.01
47	SLV 1	1427	81	3560	-73.68	56.34	0.17
47	SLV 2	1427	81	3560	-73.68	56.34	0.17
47	SLV 3	1659	27	2957	-14.15	64.57	0.05
47	SLV 4	1659	27	2957	-14.15	64.57	0.05
47	SLV 5	8	126	3879	-128.1	5.37	0.27
47	SLV 6	8	126	3879	-128.1	5.37	0.27
47	SLV 7	782	-55	1867	70.33	32.82	-0.13
47	SLV 8	782	-55	1867	70.33	32.82	-0.13
47	SLV 9	-977	111	3549	-115.22	-30.08	0.24
47	SLV 10	-977	111	3549	-115.22	-30.08	0.24
47	SLV 11	-203	-70	1537	83.21	-2.63	-0.16
47	SLV 12	-203	-70	1537	83.21	-2.63	-0.16
47	SLV 13	-1854	30	2460	-30.74	-61.83	0.06
47	SLV 14	-1854	30	2460	-30.74	-61.83	0.06
47	SLV 15	-1622	-24	1857	28.79	-53.6	-0.06
47	SLV 16	-1622	-24	1857	28.79	-53.6	-0.06
48	SLU 1	-48	27	2314	-22.32	-3.93	0.06

Nodo	Cont.	Reazione a traslazione			Reazione a rotazione		
Ind.	N.br.	x	y	z	x	y	z
48	SLU 2	28	41	2394	-38.71	-1.41	0.08
48	SLU 3	-56	28	2341	-22.87	-4.27	0.06
48	SLU 4	-11	36	2389	-32.71	-2.76	0.07
48	SLU 5	21	41	2406	-38.96	-1.67	0.08
48	SLU 6	-63	28	2353	-23.12	-4.53	0.06
48	SLU 7	-18	36	2401	-32.96	-3.02	0.07
48	SLU 8	-62	28	2338	-22.82	-4.44	0.06
48	SLU 9	-16	36	2386	-32.66	-2.93	0.07
48	SLU 10	29	44	2700	-41.53	-1.69	0.09
48	SLU 11	-56	31	2647	-25.69	-4.55	0.06
48	SLU 12	-10	39	2695	-35.53	-3.04	0.08
48	SLU 13	22	44	2712	-41.78	-1.95	0.09
48	SLU 14	-63	31	2659	-25.95	-4.8	0.06
48	SLU 15	-17	40	2707	-35.78	-3.3	0.08
48	SLU 16	-61	31	2644	-25.64	-4.71	0.06
48	SLU 17	-16	39	2692	-35.48	-3.2	0.08
48	SLU 18	-47	32	2752	-26.35	-4.33	0.07
48	SLU 19	-1	40	2800	-36.18	-2.82	0.08
48	SLU 20	-54	32	2763	-26.6	-4.58	0.07
48	SLU 21	-8	40	2812	-36.44	-3.07	0.08
48	SLU 22	-58	30	2571	-25.06	-4.57	0.06
48	SLU 23	18	44	2651	-41.45	-2.05	0.09
48	SLU 24	-67	31	2598	-25.61	-4.91	0.06
48	SLU 25	-21	39	2646	-35.44	-3.4	0.08
48	SLU 26	11	44	2663	-41.7	-2.3	0.09
48	SLU 27	-73	31	2610	-25.86	-5.16	0.06
48	SLU 28	-28	39	2658	-35.7	-3.65	0.08
48	SLU 29	-72	31	2595	-25.56	-5.07	0.06
48	SLU 30	-26	39	2643	-35.39	-3.56	0.08
48	SLU 31	18	47	2957	-44.27	-2.33	0.1
48	SLU 32	-66	34	2904	-28.43	-5.19	0.07
48	SLU 33	-21	43	2952	-38.27	-3.68	0.09
48	SLU 34	11	48	2969	-44.52	-2.58	0.1
48	SLU 35	-73	35	2916	-28.68	-5.44	0.07
48	SLU 36	-27	43	2964	-38.52	-3.93	0.09
48	SLU 37	-71	34	2901	-28.38	-5.35	0.07
48	SLU 38	-26	43	2949	-38.22	-3.84	0.09
48	SLU 39	-57	35	3009	-29.09	-4.96	0.07
48	SLU 40	-11	43	3057	-38.92	-3.45	0.09
48	SLU 41	-64	36	3020	-29.34	-5.22	0.07
48	SLU 42	-18	44	3068	-39.17	-3.71	0.09
48	SLU 43	-59	34	2920	-28.08	-4.89	0.07
48	SLU 44	17	48	3000	-44.47	-2.38	0.1
48	SLU 45	-67	35	2947	-28.63	-5.23	0.07
48	SLU 46	-22	43	2995	-38.46	-3.73	0.09
48	SLU 47	10	48	3012	-44.72	-2.63	0.1
48	SLU 48	-74	35	2959	-28.88	-5.49	0.07
48	SLU 49	-29	43	3007	-38.72	-3.98	0.09
48	SLU 50	-72	35	2944	-28.58	-5.4	0.07
48	SLU 51	-27	43	2992	-38.41	-3.89	0.09
48	SLU 52	18	51	3306	-47.29	-2.65	0.1
48	SLU 53	-67	38	3253	-31.45	-5.51	0.08
48	SLU 54	-21	46	3301	-41.29	-4	0.09
48	SLU 55	11	51	3318	-47.54	-2.91	0.1
48	SLU 56	-73	38	3265	-31.7	-5.77	0.08
48	SLU 57	-28	46	3313	-41.54	-4.26	0.1
48	SLU 58	-72	38	3250	-31.4	-5.67	0.08
48	SLU 59	-26	46	3298	-41.24	-4.16	0.09
48	SLU 60	-58	39	3358	-32.11	-5.29	0.08
48	SLU 61	-12	47	3406	-41.94	-3.78	0.1
48	SLU 62	-64	39	3369	-32.36	-5.54	0.08
48	SLU 63	-19	47	3418	-42.19	-4.03	0.1
48	SLU 64	-69	37	3177	-30.81	-5.53	0.08
48	SLU 65	7	51	3257	-47.21	-3.01	0.1
48	SLU 66	-77	38	3204	-31.37	-5.87	0.08
48	SLU 67	-32	46	3252	-41.2	-4.36	0.09
48	SLU 68	0	51	3269	-47.46	-3.26	0.1
48	SLU 69	-84	38	3216	-31.62	-6.12	0.08
48	SLU 70	-39	46	3264	-41.45	-4.61	0.09
48	SLU 71	-82	38	3201	-31.32	-6.03	0.08
48	SLU 72	-37	46	3249	-41.15	-4.52	0.09
48	SLU 73	8	54	3563	-50.03	-3.29	0.11
48	SLU 74	-77	41	3510	-34.19	-6.15	0.09
48	SLU 75	-31	50	3558	-44.02	-4.64	0.1
48	SLU 76	1	55	3575	-50.28	-3.54	0.11
48	SLU 77	-84	42	3522	-34.44	-6.4	0.09
48	SLU 78	-38	50	3570	-44.27	-4.89	0.1
48	SLU 79	-82	41	3507	-34.14	-6.31	0.08
48	SLU 80	-36	49	3555	-43.97	-4.8	0.1
48	SLU 81	-68	42	3615	-34.84	-5.92	0.09
48	SLU 82	-22	50	3663	-44.68	-4.41	0.1
48	SLU 83	-75	43	3626	-35.1	-6.18	0.09
48	SLU 84	-29	51	3675	-44.93	-4.67	0.1
48	SLE RA 1	-51	28	2387	-23.1	-4.11	0.06
48	SLE RA 2	0	37	2441	-34.03	-2.43	0.08
48	SLE RA 3	-56	28	2405	-23.47	-4.34	0.06
48	SLE RA 4	-26	34	2437	-30.03	-3.33	0.07
48	SLE RA 5	-5	37	2449	-34.2	-2.6	0.08
48	SLE RA 6	-61	29	2413	-23.64	-4.51	0.06
48	SLE RA 7	-31	34	2445	-30.19	-3.5	0.07

Nodo	Cont.	Reazione a traslazione			Reazione a rotazione		
Ind.	N.br.	x	y	z	x	y	z
48	SLE RA 8	-60	28	2403	-23.44	-4.45	0.06
48	SLE RA 9	-30	34	2435	-29.99	-3.44	0.07
48	SLE RA 10	0	39	2645	-35.91	-2.62	0.08
48	SLE RA 11	-56	31	2610	-25.35	-4.53	0.06
48	SLE RA 12	-26	36	2642	-31.91	-3.52	0.07
48	SLE RA 13	-4	39	2653	-36.08	-2.79	0.08
48	SLE RA 14	-61	31	2617	-25.52	-4.69	0.06
48	SLE RA 15	-30	36	2650	-32.08	-3.69	0.07
48	SLE RA 16	-59	31	2607	-25.32	-4.63	0.06
48	SLE RA 17	-29	36	2639	-31.87	-3.63	0.07
48	SLE RA 18	-50	31	2679	-25.79	-4.38	0.06
48	SLE RA 19	-20	37	2711	-32.34	-3.37	0.08
48	SLE RA 20	-55	31	2687	-25.96	-4.54	0.06
48	SLE RA 21	-24	37	2719	-32.51	-3.54	0.08
48	SLE FR 1	-51	28	2387	-23.1	-4.11	0.06
48	SLE FR 2	-41	30	2398	-25.29	-3.78	0.06
48	SLE FR 3	-52	28	2390	-23.17	-4.18	0.06
48	SLE FR 4	-40	31	2485	-26.09	-3.86	0.06
48	SLE FR 5	-52	29	2478	-23.97	-4.26	0.06
48	SLE FR 6	-50	30	2533	-24.44	-4.24	0.06
48	SLE QP 1	-51	28	2387	-23.1	-4.11	0.06
48	SLE QP 2	-50	29	2475	-23.91	-4.19	0.06
48	SLD 1	638	51	2822	-45.86	18.61	0.1
48	SLD 2	638	51	2822	-45.86	18.61	0.1
48	SLD 3	737	28	2580	-20.42	21.88	0.06
48	SLD 4	737	28	2580	-20.42	21.88	0.06
48	SLD 5	7	71	2945	-69.08	-2.31	0.14
48	SLD 6	7	71	2945	-69.08	-2.31	0.14
48	SLD 7	335	-7	2140	15.73	8.59	-0.01
48	SLD 8	335	-7	2140	15.73	8.59	-0.01
48	SLD 9	-435	65	2809	-63.54	-16.97	0.13
48	SLD 10	-435	65	2809	-63.54	-16.97	0.13
48	SLD 11	-108	-13	2005	21.27	-6.07	-0.03
48	SLD 12	-108	-13	2005	21.27	-6.07	-0.03
48	SLD 13	-837	30	2369	-27.39	-30.26	0.06
48	SLD 14	-837	30	2369	-27.39	-30.26	0.06
48	SLD 15	-739	7	2128	-1.95	-26.99	0.02
48	SLD 16	-739	7	2128	-1.95	-26.99	0.02
48	SLV 1	1551	84	3306	-78.09	48.8	0.17
48	SLV 2	1551	84	3306	-78.09	48.8	0.17
48	SLV 3	1798	25	2707	-14.16	57.04	0.05
48	SLV 4	1798	25	2707	-14.16	57.04	0.05
48	SLV 5	54	134	3633	-137.12	-0.8	0.27
48	SLV 6	54	134	3633	-137.12	-0.8	0.27
48	SLV 7	880	-61	1635	75.98	26.68	-0.12
48	SLV 8	880	-61	1635	75.98	26.68	-0.12
48	SLV 9	-981	119	3314	-123.79	-35.06	0.24
48	SLV 10	-981	119	3314	-123.79	-35.06	0.24
48	SLV 11	-155	-76	1316	89.31	-7.58	-0.15
48	SLV 12	-155	-76	1316	89.31	-7.58	-0.15
48	SLV 13	-1899	33	2243	-33.65	-65.42	0.07
48	SLV 14	-1899	33	2243	-33.65	-65.42	0.07
48	SLV 15	-1651	-26	1643	30.28	-57.18	-0.05
48	SLV 16	-1651	-26	1643	30.28	-57.18	-0.05
49	SLU 1	137	27	2230	-23.4	7.25	0.12
49	SLU 2	211	41	2331	-40.04	9.65	0.17
49	SLU 3	132	28	2254	-23.97	7.17	0.13
49	SLU 4	177	36	2315	-33.95	8.61	0.16
49	SLU 5	206	41	2341	-40.3	9.51	0.18
49	SLU 6	127	28	2264	-24.23	7.03	0.13
49	SLU 7	172	36	2325	-34.21	8.47	0.16
49	SLU 8	127	28	2250	-23.92	6.97	0.12
49	SLU 9	171	36	2311	-33.9	8.41	0.16
49	SLU 10	236	44	2630	-43.03	10.8	0.19
49	SLU 11	157	32	2553	-26.97	8.33	0.14
49	SLU 12	201	40	2613	-36.95	9.76	0.17
49	SLU 13	231	45	2640	-43.29	10.66	0.19
49	SLU 14	152	32	2563	-27.23	8.19	0.14
49	SLU 15	196	40	2623	-37.21	9.62	0.17
49	SLU 16	151	32	2549	-26.91	8.12	0.14
49	SLU 17	196	40	2610	-36.9	9.56	0.17
49	SLU 18	172	32	2657	-27.68	8.9	0.15
49	SLU 19	216	41	2718	-37.66	10.34	0.18
49	SLU 20	167	33	2667	-27.94	8.76	0.15
49	SLU 21	211	41	2728	-37.92	10.2	0.18
49	SLU 22	149	31	2477	-26.29	8.02	0.14
49	SLU 23	224	44	2579	-42.93	10.42	0.19
49	SLU 24	145	31	2501	-26.86	7.94	0.14
49	SLU 25	190	39	2562	-36.84	9.38	0.17
49	SLU 26	219	44	2589	-43.19	10.27	0.19
49	SLU 27	140	32	2511	-27.12	7.8	0.14
49	SLU 28	185	40	2572	-37.1	9.24	0.17
49	SLU 29	139	31	2498	-26.81	7.74	0.14
49	SLU 30	184	39	2558	-36.79	9.18	0.17
49	SLU 31	248	48	2877	-45.93	11.57	0.21
49	SLU 32	169	35	2800	-29.86	9.09	0.16
49	SLU 33	214	43	2861	-39.84	10.53	0.19
49	SLU 34	243	48	2888	-46.18	11.43	0.21
49	SLU 35	164	35	2810	-30.12	8.95	0.16
49	SLU 36	209	43	2871	-40.1	10.39	0.19

Nodo	Cont.	Reazione a traslazione			Reazione a rotazione		
Ind.	N.br.	x	y	z	x	y	z
49	SLU 37	164	35	2796	-29.8	8.89	0.16
49	SLU 38	208	43	2857	-39.79	10.33	0.19
49	SLU 39	184	36	2904	-30.57	9.67	0.16
49	SLU 40	229	44	2965	-40.55	11.1	0.19
49	SLU 41	179	36	2914	-30.83	9.52	0.16
49	SLU 42	224	44	2975	-40.81	10.96	0.19
49	SLU 43	173	34	2814	-29.43	9.17	0.15
49	SLU 44	248	48	2916	-46.07	11.56	0.21
49	SLU 45	169	35	2838	-30	9.09	0.16
49	SLU 46	214	43	2899	-39.98	10.52	0.19
49	SLU 47	243	48	2926	-46.32	11.42	0.21
49	SLU 48	164	35	2848	-30.26	8.95	0.16
49	SLU 49	209	43	2909	-40.24	10.38	0.19
49	SLU 50	163	35	2835	-29.94	8.89	0.16
49	SLU 51	208	43	2895	-39.93	10.32	0.19
49	SLU 52	272	51	3214	-49.06	12.72	0.22
49	SLU 53	193	39	3137	-33	10.24	0.17
49	SLU 54	238	47	3198	-42.98	11.68	0.2
49	SLU 55	267	52	3224	-49.32	12.58	0.22
49	SLU 56	188	39	3147	-33.26	10.1	0.17
49	SLU 57	233	47	3208	-43.24	11.54	0.21
49	SLU 58	188	39	3133	-32.94	10.04	0.17
49	SLU 59	232	47	3194	-42.93	11.48	0.2
49	SLU 60	208	40	3241	-33.71	10.81	0.18
49	SLU 61	253	48	3302	-43.69	12.25	0.21
49	SLU 62	203	40	3251	-33.97	10.67	0.18
49	SLU 63	248	48	3312	-43.95	12.11	0.21
49	SLU 64	186	38	3062	-32.32	9.93	0.17
49	SLU 65	261	51	3163	-48.96	12.33	0.22
49	SLU 66	182	39	3085	-32.89	9.85	0.17
49	SLU 67	226	47	3146	-42.87	11.29	0.2
49	SLU 68	256	52	3173	-49.22	12.19	0.22
49	SLU 69	177	39	3096	-33.15	9.71	0.17
49	SLU 70	221	47	3156	-43.13	11.15	0.2
49	SLU 71	176	38	3082	-32.84	9.65	0.17
49	SLU 72	221	46	3143	-42.82	11.09	0.2
49	SLU 73	285	55	3462	-51.95	13.48	0.24
49	SLU 74	206	42	3384	-35.89	11	0.19
49	SLU 75	251	50	3445	-45.87	12.44	0.22
49	SLU 76	280	55	3472	-52.21	13.34	0.24
49	SLU 77	201	42	3394	-36.15	10.86	0.19
49	SLU 78	246	50	3455	-46.13	12.3	0.22
49	SLU 79	200	42	3381	-35.83	10.8	0.19
49	SLU 80	245	50	3441	-45.82	12.24	0.22
49	SLU 81	221	43	3488	-36.6	11.58	0.19
49	SLU 82	266	51	3549	-46.58	13.02	0.22
49	SLU 83	216	43	3499	-36.86	11.44	0.19
49	SLU 84	261	51	3559	-46.84	12.88	0.22
49	SLE RA 1	140	28	2301	-24.22	7.47	0.13
49	SLE RA 2	190	37	2368	-35.32	9.07	0.16
49	SLE RA 3	137	29	2317	-24.61	7.42	0.13
49	SLE RA 4	167	34	2357	-31.26	8.38	0.15
49	SLE RA 5	187	37	2375	-35.49	8.98	0.16
49	SLE RA 6	134	29	2323	-24.78	7.32	0.13
49	SLE RA 7	164	34	2364	-31.43	8.28	0.15
49	SLE RA 8	134	29	2314	-24.57	7.28	0.13
49	SLE RA 9	163	34	2355	-31.22	8.24	0.15
49	SLE RA 10	206	40	2567	-37.32	9.84	0.17
49	SLE RA 11	154	31	2516	-26.6	8.19	0.14
49	SLE RA 12	183	37	2556	-33.26	9.15	0.16
49	SLE RA 13	203	40	2574	-37.49	9.74	0.17
49	SLE RA 14	150	31	2523	-26.78	8.09	0.14
49	SLE RA 15	180	37	2563	-33.43	9.05	0.16
49	SLE RA 16	150	31	2513	-26.57	8.05	0.14
49	SLE RA 17	180	36	2554	-33.22	9.01	0.16
49	SLE RA 18	164	32	2585	-27.08	8.57	0.14
49	SLE RA 19	193	37	2626	-33.73	9.53	0.16
49	SLE RA 20	160	32	2592	-27.25	8.48	0.14
49	SLE RA 21	190	37	2633	-33.91	9.43	0.16
49	SLE FR 1	140	28	2301	-24.22	7.47	0.13
49	SLE FR 2	150	30	2314	-26.44	7.79	0.13
49	SLE FR 3	139	28	2303	-24.29	7.43	0.13
49	SLE FR 4	157	31	2400	-27.3	8.12	0.14
49	SLE FR 5	146	29	2389	-25.15	7.76	0.13
49	SLE FR 6	152	30	2443	-25.65	8.02	0.13
49	SLE QP 1	140	28	2301	-24.22	7.47	0.13
49	SLE QP 2	147	29	2386	-25.08	7.8	0.13
49	SLD 1	980	51	2755	-47.06	36.16	0.22
49	SLD 2	980	51	2755	-47.06	36.16	0.22
49	SLD 3	871	28	2525	-21.04	32.43	0.12
49	SLD 4	871	28	2525	-21.04	32.43	0.12
49	SLD 5	563	71	2847	-71.13	21.97	0.3
49	SLD 6	563	71	2847	-71.13	21.97	0.3
49	SLD 7	198	-6	2078	15.59	9.53	-0.01
49	SLD 8	198	-6	2078	15.59	9.53	-0.01
49	SLD 9	96	65	2694	-65.75	6.07	0.27
49	SLD 10	96	65	2694	-65.75	6.07	0.27
49	SLD 11	-269	-12	1926	20.97	-6.37	-0.04
49	SLD 12	-269	-12	1926	20.97	-6.37	-0.04
49	SLD 13	-576	31	2248	-29.12	-16.83	0.14

Nodo	Cont.	Reazione a traslazione			Reazione a rotazione		
Ind.	N.br.	x	y	z	x	y	z
49	SLD 14	-576	31	2248	-29.12	-16.83	0.14
49	SLD 15	-686	8	2017	-3.1	-20.56	0.05
49	SLD 16	-686	8	2017	-3.1	-20.56	0.05
49	SLV 1	2105	82	3269	-79.35	74.43	0.34
49	SLV 2	2105	82	3269	-79.35	74.43	0.34
49	SLV 3	1829	24	2696	-13.97	65.07	0.11
49	SLV 4	1829	24	2696	-13.97	65.07	0.11
49	SLV 5	1152	134	3519	-140.51	41.98	0.55
49	SLV 6	1152	134	3519	-140.51	41.98	0.55
49	SLV 7	234	-61	1611	77.4	10.79	-0.23
49	SLV 8	234	-61	1611	77.4	10.79	-0.23
49	SLV 9	60	119	3162	-127.56	4.81	0.49
49	SLV 10	60	119	3162	-127.56	4.81	0.49
49	SLV 11	-857	-75	1253	90.35	-26.38	-0.28
49	SLV 12	-857	-75	1253	90.35	-26.38	-0.28
49	SLV 13	-1535	35	2076	-36.19	-49.47	0.16
49	SLV 14	-1535	35	2076	-36.19	-49.47	0.16
49	SLV 15	-1810	-23	1504	29.18	-58.83	-0.08
49	SLV 16	-1810	-23	1504	29.18	-58.83	-0.08
50	SLU 1	162	33	2281	-24.54	3.01	0.03
50	SLU 2	229	46	2423	-40.67	4.92	0.03
50	SLU 3	159	33	2304	-25.13	2.87	0.03
50	SLU 4	199	42	2390	-34.81	4.01	0.03
50	SLU 5	225	47	2433	-40.93	4.77	0.03
50	SLU 6	155	34	2314	-25.39	2.72	0.03
50	SLU 7	195	42	2400	-35.07	3.86	0.03
50	SLU 8	154	33	2300	-25.07	2.71	0.03
50	SLU 9	194	42	2386	-34.75	3.86	0.03
50	SLU 10	256	51	2734	-43.87	5.46	0.03
50	SLU 11	186	38	2615	-28.33	3.4	0.03
50	SLU 12	226	46	2701	-38	4.55	0.03
50	SLU 13	251	51	2744	-44.13	5.31	0.03
50	SLU 14	181	38	2625	-28.59	3.26	0.03
50	SLU 15	221	46	2710	-38.27	4.4	0.03
50	SLU 16	180	38	2611	-28.27	3.25	0.03
50	SLU 17	220	46	2696	-37.94	4.4	0.03
50	SLU 18	200	39	2725	-29.11	3.78	0.03
50	SLU 19	240	47	2810	-38.79	4.92	0.03
50	SLU 20	196	39	2734	-29.37	3.63	0.03
50	SLU 21	236	47	2820	-39.05	4.78	0.03
50	SLU 22	177	37	2537	-27.6	3.21	0.03
50	SLU 23	244	51	2679	-43.73	5.12	0.03
50	SLU 24	174	37	2560	-28.19	3.06	0.03
50	SLU 25	214	46	2646	-37.87	4.21	0.03
50	SLU 26	240	51	2689	-44	4.97	0.03
50	SLU 27	170	38	2570	-28.46	2.92	0.03
50	SLU 28	210	46	2655	-38.13	4.06	0.03
50	SLU 29	169	37	2556	-28.13	2.91	0.03
50	SLU 30	209	46	2642	-37.81	4.06	0.03
50	SLU 31	270	55	2990	-46.93	5.66	0.04
50	SLU 32	200	42	2871	-31.39	3.6	0.03
50	SLU 33	240	50	2956	-41.07	4.75	0.04
50	SLU 34	266	55	3000	-47.19	5.51	0.04
50	SLU 35	196	42	2881	-31.65	3.45	0.03
50	SLU 36	236	50	2966	-41.33	4.6	0.04
50	SLU 37	195	42	2867	-31.33	3.45	0.03
50	SLU 38	235	50	2952	-41.01	4.59	0.04
50	SLU 39	215	43	2981	-32.17	3.98	0.03
50	SLU 40	255	51	3066	-41.85	5.12	0.04
50	SLU 41	211	43	2990	-32.43	3.83	0.04
50	SLU 42	251	52	3076	-42.11	4.97	0.04
50	SLU 43	206	41	2877	-30.85	3.84	0.03
50	SLU 44	273	55	3020	-46.98	5.75	0.04
50	SLU 45	203	42	2901	-31.44	3.7	0.03
50	SLU 46	243	50	2986	-41.12	4.85	0.04
50	SLU 47	269	55	3029	-47.24	5.6	0.04
50	SLU 48	198	42	2911	-31.71	3.55	0.03
50	SLU 49	239	50	2996	-41.38	4.7	0.04
50	SLU 50	197	42	2897	-31.38	3.54	0.03
50	SLU 51	238	50	2982	-41.06	4.69	0.04
50	SLU 52	299	59	3330	-50.18	6.29	0.04
50	SLU 53	229	46	3212	-34.64	4.24	0.04
50	SLU 54	269	54	3297	-44.32	5.39	0.04
50	SLU 55	295	60	3340	-50.44	6.14	0.04
50	SLU 56	225	46	3221	-34.9	4.09	0.04
50	SLU 57	265	55	3307	-44.58	5.24	0.04
50	SLU 58	224	46	3208	-34.58	4.08	0.04
50	SLU 59	264	54	3293	-44.26	5.23	0.04
50	SLU 60	244	47	3321	-35.42	4.61	0.04
50	SLU 61	284	55	3407	-45.1	5.76	0.04
50	SLU 62	240	47	3331	-35.68	4.46	0.04
50	SLU 63	280	56	3416	-45.36	5.61	0.04
50	SLU 64	221	45	3133	-33.91	4.04	0.04
50	SLU 65	288	59	3276	-50.04	5.95	0.04
50	SLU 66	218	46	3157	-34.5	3.9	0.04
50	SLU 67	258	54	3242	-44.18	5.05	0.04
50	SLU 68	283	59	3285	-50.31	5.8	0.04
50	SLU 69	213	46	3167	-34.77	3.75	0.04
50	SLU 70	253	55	3252	-44.45	4.9	0.04
50	SLU 71	212	46	3153	-34.44	3.74	0.04

Nodo	Cont.	Reazione a traslazione			Reazione a rotazione		
Ind.	N.br.	x	y	z	x	y	z
50	SLU 72	252	54	3238	-44.12	4.89	0.04
50	SLU 73	314	63	3586	-53.24	6.49	0.04
50	SLU 74	244	50	3468	-37.7	4.44	0.04
50	SLU 75	284	59	3553	-47.38	5.58	0.04
50	SLU 76	310	64	3596	-53.51	6.34	0.04
50	SLU 77	240	51	3477	-37.97	4.29	0.04
50	SLU 78	280	59	3563	-47.64	5.44	0.04
50	SLU 79	239	50	3463	-37.64	4.28	0.04
50	SLU 80	279	58	3549	-47.32	5.43	0.04
50	SLU 81	259	51	3577	-38.48	4.81	0.04
50	SLU 82	299	60	3663	-48.16	5.96	0.04
50	SLU 83	254	52	3587	-38.75	4.66	0.04
50	SLU 84	294	60	3672	-48.42	5.81	0.04
50	SLE RA 1	167	34	2354	-25.41	3.06	0.03
50	SLE RA 2	211	43	2449	-36.17	4.34	0.03
50	SLE RA 3	164	34	2370	-25.81	2.97	0.03
50	SLE RA 4	191	40	2427	-32.26	3.73	0.03
50	SLE RA 5	208	43	2455	-36.34	4.24	0.03
50	SLE RA 6	162	35	2376	-25.98	2.87	0.03
50	SLE RA 7	188	40	2433	-32.44	3.64	0.03
50	SLE RA 8	161	34	2367	-25.77	2.87	0.03
50	SLE RA 9	188	40	2424	-32.22	3.63	0.03
50	SLE RA 10	229	46	2656	-38.3	4.7	0.03
50	SLE RA 11	182	37	2577	-27.94	3.33	0.03
50	SLE RA 12	209	43	2634	-34.39	4.09	0.03
50	SLE RA 13	226	46	2663	-38.48	4.6	0.03
50	SLE RA 14	179	37	2583	-28.12	3.23	0.03
50	SLE RA 15	206	43	2640	-34.57	3.99	0.03
50	SLE RA 16	179	37	2574	-27.9	3.23	0.03
50	SLE RA 17	205	43	2631	-34.35	3.99	0.03
50	SLE RA 18	192	38	2650	-28.46	3.58	0.03
50	SLE RA 19	219	43	2707	-34.91	4.34	0.03
50	SLE RA 20	189	38	2656	-28.64	3.48	0.03
50	SLE RA 21	216	44	2713	-35.09	4.24	0.03
50	SLE FR 1	167	34	2354	-25.41	3.06	0.03
50	SLE FR 2	176	36	2373	-27.56	3.32	0.03
50	SLE FR 3	166	34	2357	-25.48	3.03	0.03
50	SLE FR 4	183	37	2462	-28.48	3.47	0.03
50	SLE FR 5	173	35	2445	-26.4	3.18	0.03
50	SLE FR 6	179	36	2502	-26.94	3.32	0.03
50	SLE QP 1	167	34	2354	-25.41	3.06	0.03
50	SLE QP 2	174	35	2443	-26.33	3.22	0.03
50	SLD 1	996	57	2837	-47.35	27.91	0.04
50	SLD 2	996	57	2837	-47.35	27.91	0.04
50	SLD 3	882	32	2625	-21.86	24.62	0.03
50	SLD 4	882	32	2625	-21.86	24.62	0.03
50	SLD 5	594	79	2882	-71.29	15.62	0.04
50	SLD 6	594	79	2882	-71.29	15.62	0.04
50	SLD 7	214	-3	2176	13.67	4.64	0.01
50	SLD 8	214	-3	2176	13.67	4.64	0.01
50	SLD 9	135	73	2709	-66.33	1.8	0.04
50	SLD 10	135	73	2709	-66.33	1.8	0.04
50	SLD 11	-245	-9	2003	18.64	-9.19	0.01
50	SLD 12	-245	-9	2003	18.64	-9.19	0.01
50	SLD 13	-534	38	2260	-30.8	-18.18	0.03
50	SLD 14	-534	38	2260	-30.8	-18.18	0.03
50	SLD 15	-648	13	2048	-5.31	-21.47	0.02
50	SLD 16	-648	13	2048	-5.31	-21.47	0.02
50	SLV 1	2106	89	3380	-78.25	61.23	0.05
50	SLV 2	2106	89	3380	-78.25	61.23	0.05
50	SLV 3	1819	27	2858	-14.23	52.95	0.02
50	SLV 4	1819	27	2858	-14.23	52.95	0.02
50	SLV 5	1188	145	3516	-139.01	33.18	0.07
50	SLV 6	1188	145	3516	-139.01	33.18	0.07
50	SLV 7	233	-62	1775	74.4	5.58	-0.01
50	SLV 8	233	-62	1775	74.4	5.58	-0.01
50	SLV 9	115	132	3111	-127.06	0.86	0.06
50	SLV 10	115	132	3111	-127.06	0.86	0.06
50	SLV 11	-840	-75	1369	86.35	-26.75	-0.01
50	SLV 12	-840	-75	1369	86.35	-26.75	-0.01
50	SLV 13	-1471	43	2028	-38.43	-46.51	0.03
50	SLV 14	-1471	43	2028	-38.43	-46.51	0.03
50	SLV 15	-1757	-19	1505	25.6	-54.79	0.01
50	SLV 16	-1757	-19	1505	25.6	-54.79	0.01
51	SLU 1	274	32	2423	-24.85	11.19	0
51	SLU 2	328	44	2615	-39.57	12.71	0
51	SLU 3	274	33	2448	-25.43	11.25	0
51	SLU 4	306	40	2564	-34.27	12.16	0
51	SLU 5	325	44	2626	-39.84	12.65	0
51	SLU 6	271	33	2459	-25.7	11.19	0
51	SLU 7	304	40	2575	-34.53	12.1	0
51	SLU 8	269	33	2444	-25.37	11.07	0
51	SLU 9	301	40	2560	-34.21	11.98	0
51	SLU 10	366	48	2949	-42.87	14.22	0
51	SLU 11	312	38	2782	-28.73	12.76	0
51	SLU 12	345	44	2898	-37.56	13.67	0
51	SLU 13	364	49	2960	-43.13	14.16	0
51	SLU 14	310	38	2793	-28.99	12.7	0
51	SLU 15	342	45	2909	-37.82	13.61	0
51	SLU 16	307	37	2778	-28.66	12.58	0

Nodo	Cont.	Reazione a traslazione			Reazione a rotazione		
Ind.	N.br.	x	y	z	x	y	z
51	SLU 17	340	44	2894	-37.5	13.49	0
51	SLU 18	329	39	2900	-29.55	13.35	0
51	SLU 19	361	46	3015	-38.39	14.26	0
51	SLU 20	326	39	2910	-29.81	13.29	0
51	SLU 21	359	46	3026	-38.65	14.2	0
51	SLU 22	302	37	2698	-27.98	12.36	0
51	SLU 23	355	48	2891	-42.71	13.88	0
51	SLU 24	301	37	2724	-28.57	12.42	0
51	SLU 25	334	44	2840	-37.4	13.33	0
51	SLU 26	353	48	2902	-42.97	13.82	0
51	SLU 27	299	38	2735	-28.83	12.36	0
51	SLU 28	331	45	2850	-37.66	13.27	0
51	SLU 29	296	37	2720	-28.5	12.24	0
51	SLU 30	329	44	2835	-37.34	13.15	0
51	SLU 31	394	52	3225	-46	15.39	0
51	SLU 32	340	42	3058	-31.86	13.93	0
51	SLU 33	372	49	3174	-40.69	14.84	0
51	SLU 34	391	53	3236	-46.26	15.33	0
51	SLU 35	337	42	3069	-32.12	13.87	0
51	SLU 36	369	49	3184	-40.96	14.78	0
51	SLU 37	335	42	3054	-31.79	13.76	0
51	SLU 38	367	49	3169	-40.63	14.67	0
51	SLU 39	356	43	3175	-32.68	14.53	0
51	SLU 40	389	50	3291	-41.52	15.44	0
51	SLU 41	354	43	3186	-32.94	14.47	0
51	SLU 42	386	50	3302	-41.78	15.38	0
51	SLU 43	347	41	3055	-31.23	14.14	0
51	SLU 44	401	52	3248	-45.95	15.66	0
51	SLU 45	347	41	3081	-31.81	14.2	0
51	SLU 46	379	48	3196	-40.65	15.11	0
51	SLU 47	398	53	3258	-46.21	15.6	0
51	SLU 48	344	42	3091	-32.08	14.14	0
51	SLU 49	377	49	3207	-40.91	15.05	0
51	SLU 50	342	41	3076	-31.75	14.03	0
51	SLU 51	374	48	3192	-40.59	14.93	0
51	SLU 52	439	57	3582	-49.25	17.17	0
51	SLU 53	385	46	3415	-35.11	15.71	0
51	SLU 54	418	53	3530	-43.94	16.62	0
51	SLU 55	437	57	3592	-49.51	17.11	0
51	SLU 56	383	46	3425	-35.37	15.65	0
51	SLU 57	415	53	3541	-44.2	16.56	0
51	SLU 58	380	46	3410	-35.04	15.54	0
51	SLU 59	412	53	3526	-43.88	16.45	0
51	SLU 60	402	47	3532	-35.93	16.31	0
51	SLU 61	434	54	3648	-44.77	17.22	0
51	SLU 62	399	47	3543	-36.19	16.25	0
51	SLU 63	431	54	3658	-45.03	17.16	0
51	SLU 64	374	45	3330	-34.36	15.32	0
51	SLU 65	428	56	3523	-49.09	16.83	0
51	SLU 66	374	46	3356	-34.95	15.37	0
51	SLU 67	407	53	3472	-43.78	16.28	0
51	SLU 68	426	57	3534	-49.35	16.77	0
51	SLU 69	372	46	3367	-35.21	15.31	0
51	SLU 70	404	53	3483	-44.04	16.22	0
51	SLU 71	369	45	3352	-34.88	15.2	0
51	SLU 72	401	52	3468	-43.72	16.11	0
51	SLU 73	467	61	3857	-52.38	18.35	0
51	SLU 74	413	50	3690	-38.24	16.89	0
51	SLU 75	445	57	3806	-47.07	17.8	0
51	SLU 76	464	61	3868	-52.64	18.29	0
51	SLU 77	410	50	3701	-38.5	16.83	0
51	SLU 78	442	57	3817	-47.34	17.74	0
51	SLU 79	407	50	3686	-38.17	16.71	0
51	SLU 80	440	57	3802	-47.01	17.62	0
51	SLU 81	429	51	3808	-39.06	17.48	0
51	SLU 82	462	58	3923	-47.9	18.39	0
51	SLU 83	426	51	3818	-39.32	17.42	0
51	SLU 84	459	58	3934	-48.16	18.33	0
51	SLE RA 1	282	34	2501	-25.74	11.53	0
51	SLE RA 2	318	41	2630	-35.56	12.54	0
51	SLE RA 3	282	34	2518	-26.13	11.56	0
51	SLE RA 4	303	39	2596	-32.02	12.17	0
51	SLE RA 5	316	41	2637	-35.73	12.5	0
51	SLE RA 6	280	34	2526	-26.31	11.52	0
51	SLE RA 7	302	39	2603	-32.2	12.13	0
51	SLE RA 8	278	34	2516	-26.09	11.45	0
51	SLE RA 9	300	39	2593	-31.98	12.05	0
51	SLE RA 10	343	44	2853	-37.75	13.54	0
51	SLE RA 11	307	37	2741	-28.33	12.57	0
51	SLE RA 12	329	42	2818	-34.22	13.18	0
51	SLE RA 13	342	44	2860	-37.93	13.51	0
51	SLE RA 14	306	37	2748	-28.5	12.53	0
51	SLE RA 15	327	42	2825	-34.39	13.14	0
51	SLE RA 16	304	37	2738	-28.28	12.45	0
51	SLE RA 17	326	42	2815	-34.18	13.06	0
51	SLE RA 18	318	38	2819	-28.88	12.97	0
51	SLE RA 19	340	42	2897	-34.77	13.57	0
51	SLE RA 20	317	38	2827	-29.05	12.93	0
51	SLE RA 21	338	43	2904	-34.94	13.53	0
51	SLE FR 1	282	34	2501	-25.74	11.53	0

Nodo	Cont.	Reazione a traslazione			Reazione a rotazione		
Ind.	N.br.	x	y	z	x	y	z
51	SLE FR 2	289	35	2527	-27.7	11.73	0
51	SLE FR 3	281	34	2504	-25.81	11.51	0
51	SLE FR 4	300	36	2622	-28.65	12.16	0
51	SLE FR 5	292	35	2600	-26.75	11.94	0
51	SLE FR 6	300	36	2660	-27.31	12.25	0
51	SLE QP 1	282	34	2501	-25.74	11.53	0
51	SLE QP 2	293	35	2597	-26.68	11.96	0
51	SLD 1	1109	53	2985	-45.63	38.37	0
51	SLD 2	1109	53	2985	-45.63	38.37	0
51	SLD 3	984	32	2790	-22.1	34.35	0
51	SLD 4	984	32	2790	-22.1	34.35	0
51	SLD 5	726	73	3009	-68.06	25.97	0
51	SLD 6	726	73	3009	-68.06	25.97	0
51	SLD 7	312	2	2359	10.39	12.59	0
51	SLD 8	312	2	2359	10.39	12.59	0
51	SLD 9	274	68	2835	-63.75	11.33	0.01
51	SLD 10	274	68	2835	-63.75	11.33	0.01
51	SLD 11	-141	-3	2184	14.7	-2.05	0
51	SLD 12	-141	-3	2184	14.7	-2.05	0
51	SLD 13	-398	38	2404	-31.27	-10.44	0.01
51	SLD 14	-398	38	2404	-31.27	-10.44	0.01
51	SLD 15	-523	17	2209	-7.73	-14.45	0
51	SLD 16	-523	17	2209	-7.73	-14.45	0
51	SLV 1	2210	79	3515	-73.52	73.99	0
51	SLV 2	2210	79	3515	-73.52	73.99	0
51	SLV 3	1900	26	3039	-14.45	64.03	-0.01
51	SLV 4	1900	26	3039	-14.45	64.03	-0.01
51	SLV 5	1338	129	3594	-130.32	45.68	0.01
51	SLV 6	1338	129	3594	-130.32	45.68	0.01
51	SLV 7	305	-49	2007	66.57	12.47	-0.01
51	SLV 8	305	-49	2007	66.57	12.47	-0.01
51	SLV 9	281	118	3186	-119.94	11.44	0.01
51	SLV 10	281	118	3186	-119.94	11.44	0.01
51	SLV 11	-753	-59	1599	76.96	-21.76	-0.01
51	SLV 12	-753	-59	1599	76.96	-21.76	-0.01
51	SLV 13	-1314	44	2154	-38.91	-40.12	0.01
51	SLV 14	-1314	44	2154	-38.91	-40.12	0.01
51	SLV 15	-1624	-10	1678	20.16	-50.08	0
51	SLV 16	-1624	-10	1678	20.16	-50.08	0
52	SLU 1	206	34	2597	-24.17	2.7	0.14
52	SLU 2	244	43	2842	-36.89	3.74	0.19
52	SLU 3	205	34	2626	-24.74	2.58	0.15
52	SLU 4	228	40	2773	-32.37	3.21	0.17
52	SLU 5	241	44	2855	-37.14	3.62	0.19
52	SLU 6	202	35	2639	-24.99	2.45	0.15
52	SLU 7	225	41	2786	-32.62	3.08	0.17
52	SLU 8	200	34	2622	-24.67	2.44	0.15
52	SLU 9	223	40	2769	-32.31	3.07	0.17
52	SLU 10	270	48	3203	-40.14	4.07	0.21
52	SLU 11	231	39	2986	-27.99	2.91	0.17
52	SLU 12	254	45	3134	-35.62	3.53	0.19
52	SLU 13	267	48	3215	-40.39	3.95	0.21
52	SLU 14	228	39	2999	-28.24	2.78	0.17
52	SLU 15	251	45	3146	-35.87	3.41	0.19
52	SLU 16	226	39	2982	-27.92	2.77	0.17
52	SLU 17	249	45	3129	-35.55	3.4	0.19
52	SLU 18	243	40	3112	-28.81	3.16	0.17
52	SLU 19	266	46	3259	-36.45	3.79	0.2
52	SLU 20	240	40	3124	-29.06	3.04	0.17
52	SLU 21	263	46	3271	-36.7	3.67	0.2
52	SLU 22	222	38	2896	-27.25	2.74	0.16
52	SLU 23	261	48	3141	-39.97	3.79	0.21
52	SLU 24	221	39	2925	-27.81	2.62	0.17
52	SLU 25	244	45	3072	-35.44	3.25	0.19
52	SLU 26	258	48	3154	-40.22	3.66	0.21
52	SLU 27	218	39	2937	-28.06	2.49	0.17
52	SLU 28	241	45	3085	-35.69	3.12	0.19
52	SLU 29	217	39	2921	-27.75	2.48	0.17
52	SLU 30	240	44	3068	-35.38	3.11	0.19
52	SLU 31	287	52	3501	-43.22	4.11	0.22
52	SLU 32	247	43	3285	-31.06	2.95	0.19
52	SLU 33	270	49	3433	-38.69	3.58	0.21
52	SLU 34	284	53	3514	-43.47	3.99	0.23
52	SLU 35	245	44	3298	-31.31	2.82	0.19
52	SLU 36	268	49	3445	-38.94	3.45	0.21
52	SLU 37	243	43	3281	-31	2.81	0.19
52	SLU 38	266	49	3428	-38.63	3.44	0.21
52	SLU 39	260	44	3411	-31.89	3.2	0.19
52	SLU 40	283	50	3558	-39.52	3.83	0.22
52	SLU 41	257	45	3423	-32.14	3.08	0.19
52	SLU 42	280	51	3570	-39.77	3.71	0.22
52	SLU 43	262	42	3273	-30.37	3.49	0.18
52	SLU 44	300	52	3519	-43.09	4.54	0.22
52	SLU 45	261	43	3303	-30.93	3.37	0.18
52	SLU 46	284	49	3450	-38.57	4	0.21
52	SLU 47	297	52	3531	-43.34	4.41	0.22
52	SLU 48	258	43	3315	-31.18	3.25	0.19
52	SLU 49	281	49	3462	-38.82	3.87	0.21
52	SLU 50	256	43	3298	-30.87	3.24	0.18
52	SLU 51	279	49	3446	-38.5	3.87	0.21

Nodo	Cont.	Reazione a traslazione			Reazione a rotazione		
Ind.	N.br.	x	y	z	x	y	z
52	SLU 52	326	57	3879	-46.34	4.87	0.24
52	SLU 53	287	47	3663	-34.18	3.7	0.2
52	SLU 54	310	53	3810	-41.82	4.33	0.23
52	SLU 55	324	57	3892	-46.59	4.74	0.24
52	SLU 56	284	48	3675	-34.43	3.57	0.21
52	SLU 57	307	54	3823	-42.07	4.2	0.23
52	SLU 58	282	47	3659	-34.12	3.56	0.2
52	SLU 59	305	53	3806	-41.75	4.19	0.23
52	SLU 60	299	49	3788	-35.01	3.96	0.21
52	SLU 61	322	55	3935	-42.64	4.59	0.23
52	SLU 62	296	49	3801	-35.26	3.83	0.21
52	SLU 63	319	55	3948	-42.89	4.46	0.24
52	SLU 64	278	46	3572	-33.44	3.53	0.2
52	SLU 65	317	56	3818	-46.17	4.58	0.24
52	SLU 66	277	47	3602	-34.01	3.41	0.2
52	SLU 67	300	53	3749	-41.64	4.04	0.23
52	SLU 68	314	57	3830	-46.42	4.45	0.24
52	SLU 69	274	48	3614	-34.26	3.29	0.2
52	SLU 70	298	53	3761	-41.89	3.92	0.23
52	SLU 71	273	47	3597	-33.94	3.28	0.2
52	SLU 72	296	53	3744	-41.58	3.91	0.23
52	SLU 73	343	61	4178	-49.41	4.91	0.26
52	SLU 74	303	52	3962	-37.26	3.74	0.22
52	SLU 75	326	58	4109	-44.89	4.37	0.25
52	SLU 76	340	61	4190	-49.67	4.78	0.26
52	SLU 77	301	52	3974	-37.51	3.61	0.22
52	SLU 78	324	58	4122	-45.14	4.24	0.25
52	SLU 79	299	52	3958	-37.19	3.61	0.22
52	SLU 80	322	58	4105	-44.83	4.24	0.25
52	SLU 81	316	53	4087	-38.09	4	0.23
52	SLU 82	339	59	4234	-45.72	4.63	0.25
52	SLU 83	313	53	4099	-38.34	3.87	0.23
52	SLU 84	336	59	4247	-45.97	4.5	0.25
52	SLE RA 1	210	35	2682	-25.05	2.71	0.15
52	SLE RA 2	236	41	2846	-33.53	3.41	0.18
52	SLE RA 3	210	35	2702	-25.43	2.63	0.15
52	SLE RA 4	225	39	2800	-30.52	3.05	0.17
52	SLE RA 5	234	42	2854	-33.7	3.32	0.18
52	SLE RA 6	208	35	2710	-25.59	2.54	0.15
52	SLE RA 7	223	39	2808	-30.68	2.96	0.17
52	SLE RA 8	207	35	2699	-25.38	2.54	0.15
52	SLE RA 9	222	39	2797	-30.47	2.96	0.17
52	SLE RA 10	254	44	3086	-35.7	3.62	0.19
52	SLE RA 11	227	38	2942	-27.59	2.85	0.16
52	SLE RA 12	243	42	3040	-32.68	3.27	0.18
52	SLE RA 13	252	45	3094	-35.86	3.54	0.19
52	SLE RA 14	225	39	2950	-27.76	2.76	0.17
52	SLE RA 15	241	42	3048	-32.85	3.18	0.18
52	SLE RA 16	224	38	2939	-27.55	2.76	0.16
52	SLE RA 17	239	42	3037	-32.64	3.18	0.18
52	SLE RA 18	235	39	3025	-28.15	3.02	0.17
52	SLE RA 19	251	43	3124	-33.23	3.44	0.19
52	SLE RA 20	233	39	3034	-28.31	2.93	0.17
52	SLE RA 21	249	43	3132	-33.4	3.35	0.19
52	SLE FR 1	210	35	2682	-25.05	2.71	0.15
52	SLE FR 2	216	36	2715	-26.75	2.85	0.16
52	SLE FR 3	210	35	2686	-25.12	2.67	0.15
52	SLE FR 4	223	37	2818	-27.67	2.94	0.16
52	SLE FR 5	217	36	2789	-26.05	2.77	0.16
52	SLE FR 6	223	37	2854	-26.6	2.86	0.16
52	SLE QP 1	210	35	2682	-25.05	2.71	0.15
52	SLE QP 2	218	36	2785	-25.98	2.8	0.16
52	SLD 1	1009	52	3152	-42.25	27.1	0.22
52	SLD 2	1009	52	3152	-42.25	27.1	0.22
52	SLD 3	885	33	2952	-21.67	23.65	0.14
52	SLD 4	885	33	2952	-21.67	23.65	0.14
52	SLD 5	643	69	3200	-62.08	15.33	0.3
52	SLD 6	643	69	3200	-62.08	15.33	0.3
52	SLD 7	231	6	2531	6.53	3.82	0.03
52	SLD 8	231	6	2531	6.53	3.82	0.03
52	SLD 9	205	66	3040	-58.49	1.78	0.28
52	SLD 10	205	66	3040	-58.49	1.78	0.28
52	SLD 11	-207	3	2370	10.12	-9.73	0.01
52	SLD 12	-207	3	2370	10.12	-9.73	0.01
52	SLD 13	-450	39	2619	-30.29	-18.05	0.17
52	SLD 14	-450	39	2619	-30.29	-18.05	0.17
52	SLD 15	-573	20	2418	-9.7	-21.5	0.09
52	SLD 16	-573	20	2418	-9.7	-21.5	0.09
52	SLV 1	2077	74	3652	-66.2	59.88	0.32
52	SLV 2	2077	74	3652	-66.2	59.88	0.32
52	SLV 3	1769	27	3168	-14.6	51.26	0.12
52	SLV 4	1769	27	3168	-14.6	51.26	0.12
52	SLV 5	1242	119	3780	-116.31	32.99	0.51
52	SLV 6	1242	119	3780	-116.31	32.99	0.51
52	SLV 7	217	-38	2165	55.7	4.27	-0.16
52	SLV 8	217	-38	2165	55.7	4.27	-0.16
52	SLV 9	219	110	3405	-107.66	1.33	0.47
52	SLV 10	219	110	3405	-107.66	1.33	0.47
52	SLV 11	-806	-47	1790	64.35	-27.39	-0.2
52	SLV 12	-806	-47	1790	64.35	-27.39	-0.2

Nodo	Cont.	Reazione a traslazione			Reazione a rotazione		
Ind.	N.br.	x	y	z	x	y	z
52	SLV 13	-1333	45	2403	-37.36	-45.66	0.19
52	SLV 14	-1333	45	2403	-37.36	-45.66	0.19
52	SLV 15	-1641	-2	1918	14.25	-54.28	-0.01
52	SLV 16	-1641	-2	1918	14.25	-54.28	-0.01
53	SLU 1	271	31	2802	-21.92	10.22	0.11
53	SLU 2	292	38	3101	-32.02	10.63	0.14
53	SLU 3	273	32	2836	-22.43	10.3	0.12
53	SLU 4	285	36	3015	-28.49	10.54	0.13
53	SLU 5	290	39	3115	-32.24	10.6	0.14
53	SLU 6	271	32	2851	-22.65	10.27	0.12
53	SLU 7	283	37	3030	-28.71	10.51	0.13
53	SLU 8	268	32	2832	-22.37	10.16	0.12
53	SLU 9	280	36	3011	-28.43	10.4	0.13
53	SLU 10	323	43	3489	-35	11.83	0.15
53	SLU 11	304	36	3225	-25.41	11.5	0.13
53	SLU 12	316	41	3404	-31.47	11.75	0.15
53	SLU 13	321	43	3504	-35.23	11.8	0.15
53	SLU 14	302	37	3240	-25.64	11.47	0.13
53	SLU 15	314	41	3419	-31.7	11.72	0.15
53	SLU 16	299	36	3221	-25.35	11.36	0.13
53	SLU 17	311	41	3400	-31.41	11.61	0.15
53	SLU 18	316	38	3358	-26.18	11.94	0.14
53	SLU 19	328	42	3537	-32.24	12.19	0.15
53	SLU 20	314	38	3373	-26.41	11.91	0.14
53	SLU 21	327	42	3551	-32.47	12.16	0.15
53	SLU 22	294	36	3128	-24.73	11.18	0.13
53	SLU 23	315	43	3426	-34.83	11.59	0.15
53	SLU 24	295	36	3162	-25.24	11.26	0.13
53	SLU 25	308	40	3341	-31.3	11.5	0.14
53	SLU 26	313	43	3441	-35.05	11.56	0.15
53	SLU 27	294	37	3176	-25.47	11.23	0.13
53	SLU 28	306	41	3355	-31.52	11.47	0.15
53	SLU 29	291	36	3157	-25.18	11.12	0.13
53	SLU 30	303	40	3336	-31.24	11.36	0.14
53	SLU 31	346	47	3815	-37.81	12.79	0.17
53	SLU 32	327	41	3550	-28.22	12.47	0.15
53	SLU 33	339	45	3729	-34.28	12.71	0.16
53	SLU 34	344	47	3829	-38.04	12.76	0.17
53	SLU 35	325	41	3565	-28.45	12.44	0.15
53	SLU 36	337	45	3744	-34.51	12.68	0.16
53	SLU 37	322	40	3546	-28.17	12.32	0.15
53	SLU 38	334	45	3725	-34.22	12.57	0.16
53	SLU 39	339	42	3683	-29	12.9	0.15
53	SLU 40	351	46	3862	-35.05	13.15	0.17
53	SLU 41	337	42	3698	-29.22	12.87	0.15
53	SLU 42	349	46	3877	-35.28	13.12	0.17
53	SLU 43	345	39	3532	-27.53	12.95	0.14
53	SLU 44	365	46	3830	-37.63	13.36	0.17
53	SLU 45	346	40	3566	-28.04	13.03	0.15
53	SLU 46	358	44	3744	-34.1	13.28	0.16
53	SLU 47	364	47	3845	-37.85	13.33	0.17
53	SLU 48	344	40	3580	-28.27	13	0.15
53	SLU 49	357	45	3759	-34.32	13.25	0.16
53	SLU 50	342	40	3561	-27.98	12.89	0.14
53	SLU 51	354	44	3740	-34.04	13.14	0.16
53	SLU 52	397	51	4218	-40.61	14.57	0.18
53	SLU 53	377	45	3954	-31.03	14.24	0.16
53	SLU 54	390	49	4133	-37.08	14.49	0.17
53	SLU 55	395	51	4233	-40.84	14.54	0.18
53	SLU 56	376	45	3969	-31.25	14.21	0.16
53	SLU 57	388	49	4148	-37.31	14.46	0.18
53	SLU 58	373	44	3950	-30.97	14.1	0.16
53	SLU 59	385	49	4129	-37.02	14.35	0.17
53	SLU 60	390	46	4087	-31.8	14.68	0.17
53	SLU 61	402	50	4266	-37.85	14.92	0.18
53	SLU 62	388	46	4102	-32.02	14.65	0.17
53	SLU 63	400	50	4281	-38.08	14.89	0.18
53	SLU 64	368	44	3857	-30.34	13.91	0.16
53	SLU 65	388	51	4155	-40.44	14.32	0.18
53	SLU 66	369	44	3891	-30.85	13.99	0.16
53	SLU 67	381	48	4070	-36.91	14.24	0.17
53	SLU 68	387	51	4170	-40.67	14.29	0.18
53	SLU 69	367	45	3906	-31.08	13.96	0.16
53	SLU 70	379	49	4085	-37.14	14.21	0.18
53	SLU 71	365	44	3887	-30.79	13.85	0.16
53	SLU 72	377	48	4065	-36.85	14.1	0.17
53	SLU 73	420	55	4544	-43.42	15.53	0.2
53	SLU 74	400	49	4280	-33.84	15.2	0.18
53	SLU 75	412	53	4458	-39.89	15.45	0.19
53	SLU 76	418	55	4559	-43.65	15.5	0.2
53	SLU 77	399	49	4294	-34.06	15.17	0.18
53	SLU 78	411	53	4473	-40.12	15.42	0.19
53	SLU 79	396	49	4275	-33.78	15.06	0.18
53	SLU 80	408	53	4454	-39.84	15.31	0.19
53	SLU 81	413	50	4412	-34.61	15.64	0.18
53	SLU 82	425	54	4591	-40.66	15.88	0.19
53	SLU 83	411	50	4427	-34.83	15.61	0.18
53	SLU 84	423	54	4606	-40.89	15.85	0.2
53	SLE RA 1	278	33	2895	-22.72	10.49	0.12
53	SLE RA 2	292	37	3094	-29.45	10.76	0.13

Nodo	Cont.	Reazione a traslazione			Reazione a rotazione		
Ind.	N.br.	x	y	z	x	y	z
53	SLE RA 3	279	33	2918	-23.06	10.55	0.12
53	SLE RA 4	287	36	3037	-27.1	10.71	0.13
53	SLE RA 5	290	37	3104	-29.6	10.74	0.13
53	SLE RA 6	278	33	2928	-23.21	10.53	0.12
53	SLE RA 7	286	36	3047	-27.25	10.69	0.13
53	SLE RA 8	276	33	2915	-23.02	10.45	0.12
53	SLE RA 9	284	36	3034	-27.06	10.62	0.13
53	SLE RA 10	312	40	3353	-31.44	11.57	0.14
53	SLE RA 11	300	36	3177	-25.05	11.35	0.13
53	SLE RA 12	308	39	3296	-29.09	11.51	0.14
53	SLE RA 13	311	40	3363	-31.59	11.55	0.14
53	SLE RA 14	298	36	3187	-25.2	11.33	0.13
53	SLE RA 15	307	39	3306	-29.24	11.49	0.14
53	SLE RA 16	297	36	3174	-25.01	11.26	0.13
53	SLE RA 17	305	39	3294	-29.05	11.42	0.14
53	SLE RA 18	308	37	3266	-25.57	11.64	0.13
53	SLE RA 19	316	40	3385	-29.6	11.8	0.14
53	SLE RA 20	307	37	3276	-25.72	11.62	0.13
53	SLE RA 21	315	40	3395	-29.75	11.78	0.14
53	SLE FR 1	278	33	2895	-22.72	10.49	0.12
53	SLE FR 2	281	34	2935	-24.07	10.55	0.12
53	SLE FR 3	278	33	2899	-22.78	10.48	0.12
53	SLE FR 4	290	35	3046	-24.92	10.89	0.13
53	SLE FR 5	286	34	3010	-23.64	10.83	0.12
53	SLE FR 6	293	35	3081	-24.15	11.07	0.13
53	SLE QP 1	278	33	2895	-22.72	10.49	0.12
53	SLE QP 2	287	34	3006	-23.58	10.84	0.12
53	SLD 1	1082	46	3352	-36.59	34.76	0.16
53	SLD 2	1082	46	3352	-36.59	34.76	0.16
53	SLD 3	952	31	3107	-20.01	30.91	0.12
53	SLD 4	952	31	3107	-20.01	30.91	0.12
53	SLD 5	724	60	3483	-52.63	23.84	0.21
53	SLD 6	724	60	3483	-52.63	23.84	0.21
53	SLD 7	288	11	2664	2.65	11.03	0.04
53	SLD 8	288	11	2664	2.65	11.03	0.04
53	SLD 9	286	57	3349	-49.8	10.64	0.2
53	SLD 10	286	57	3349	-49.8	10.64	0.2
53	SLD 11	-150	8	2530	5.48	-2.17	0.03
53	SLD 12	-150	8	2530	5.48	-2.17	0.03
53	SLD 13	-378	36	2906	-27.15	-9.24	0.13
53	SLD 14	-378	36	2906	-27.15	-9.24	0.13
53	SLD 15	-509	22	2661	-10.56	-13.09	0.08
53	SLD 16	-509	22	2661	-10.56	-13.09	0.08
53	SLV 1	2156	64	3826	-55.7	67.01	0.23
53	SLV 2	2156	64	3826	-55.7	67.01	0.23
53	SLV 3	1833	27	3234	-14.19	57.54	0.1
53	SLV 4	1833	27	3234	-14.19	57.54	0.1
53	SLV 5	1337	97	4150	-96.17	42.05	0.34
53	SLV 6	1337	97	4150	-96.17	42.05	0.34
53	SLV 7	261	-23	2177	42.2	10.48	-0.07
53	SLV 8	261	-23	2177	42.2	10.48	-0.07
53	SLV 9	313	90	3836	-89.35	11.19	0.31
53	SLV 10	313	90	3836	-89.35	11.19	0.31
53	SLV 11	-763	-30	1863	49.02	-20.38	-0.1
53	SLV 12	-763	-30	1863	49.02	-20.38	-0.1
53	SLV 13	-1259	40	2779	-32.97	-35.87	0.14
53	SLV 14	-1259	40	2779	-32.97	-35.87	0.14
53	SLV 15	-1582	4	2187	8.54	-45.34	0.02
53	SLV 16	-1582	4	2187	8.54	-45.34	0.02
54	SLU 1	129	25	3019	-17.76	0.13	-0.03
54	SLU 2	133	29	3370	-24.83	0.12	-0.04
54	SLU 3	127	26	3058	-18.17	0	-0.03
54	SLU 4	130	28	3269	-22.41	-0.01	-0.04
54	SLU 5	130	29	3387	-25.01	0	-0.04
54	SLU 6	124	26	3076	-18.36	-0.12	-0.03
54	SLU 7	127	28	3286	-22.59	-0.13	-0.04
54	SLU 8	123	26	3054	-18.13	-0.11	-0.03
54	SLU 9	126	28	3265	-22.36	-0.11	-0.04
54	SLU 10	143	32	3786	-27.27	-0.06	-0.04
54	SLU 11	137	29	3475	-20.62	-0.18	-0.04
54	SLU 12	140	31	3685	-24.85	-0.19	-0.04
54	SLU 13	140	33	3804	-27.45	-0.18	-0.05
54	SLU 14	134	30	3492	-20.8	-0.3	-0.04
54	SLU 15	137	32	3703	-25.04	-0.31	-0.04
54	SLU 16	133	29	3471	-20.57	-0.29	-0.04
54	SLU 17	136	31	3681	-24.81	-0.29	-0.04
54	SLU 18	143	30	3614	-21.25	-0.12	-0.04
54	SLU 19	146	32	3824	-25.49	-0.13	-0.04
54	SLU 20	141	31	3632	-21.43	-0.24	-0.04
54	SLU 21	143	33	3842	-25.67	-0.25	-0.04
54	SLU 22	132	29	3371	-20.06	-0.24	-0.04
54	SLU 23	136	32	3722	-27.12	-0.25	-0.04
54	SLU 24	130	29	3410	-20.47	-0.37	-0.04
54	SLU 25	133	31	3620	-24.71	-0.38	-0.04
54	SLU 26	133	32	3739	-27.3	-0.36	-0.05
54	SLU 27	127	29	3428	-20.65	-0.49	-0.04
54	SLU 28	130	31	3638	-24.89	-0.49	-0.04
54	SLU 29	126	29	3406	-20.42	-0.47	-0.04
54	SLU 30	129	31	3616	-24.66	-0.48	-0.04
54	SLU 31	146	36	4138	-29.56	-0.42	-0.05

Nodo	Cont.	Reazione a traslazione			Reazione a rotazione		
Ind.	N.br.	x	y	z	x	y	z
54	SLU 32	140	33	3827	-22.91	-0.55	-0.04
54	SLU 33	143	35	4037	-27.15	-0.55	-0.05
54	SLU 34	143	36	4156	-29.74	-0.54	-0.05
54	SLU 35	137	33	3844	-23.09	-0.67	-0.04
54	SLU 36	140	35	4055	-27.33	-0.67	-0.05
54	SLU 37	136	33	3823	-22.86	-0.65	-0.04
54	SLU 38	139	35	4033	-27.1	-0.66	-0.05
54	SLU 39	146	34	3966	-23.54	-0.49	-0.04
54	SLU 40	149	36	4176	-27.78	-0.5	-0.05
54	SLU 41	144	34	3983	-23.73	-0.61	-0.04
54	SLU 42	146	36	4194	-27.96	-0.61	-0.05
54	SLU 43	167	32	3804	-22.31	0.29	-0.04
54	SLU 44	171	35	4155	-29.37	0.28	-0.05
54	SLU 45	165	32	3843	-22.72	0.16	-0.04
54	SLU 46	167	34	4054	-26.95	0.15	-0.05
54	SLU 47	168	35	4172	-29.55	0.16	-0.05
54	SLU 48	162	32	3861	-22.9	0.04	-0.04
54	SLU 49	164	35	4071	-27.14	0.03	-0.05
54	SLU 50	161	32	3839	-22.67	0.06	-0.04
54	SLU 51	163	34	4050	-26.91	0.05	-0.05
54	SLU 52	181	39	4571	-31.81	0.11	-0.05
54	SLU 53	175	36	4260	-25.16	-0.02	-0.05
54	SLU 54	177	38	4470	-29.4	-0.02	-0.05
54	SLU 55	178	39	4589	-31.99	-0.01	-0.05
54	SLU 56	172	36	4277	-25.34	-0.14	-0.05
54	SLU 57	174	38	4488	-29.58	-0.14	-0.05
54	SLU 58	171	36	4256	-25.11	-0.12	-0.05
54	SLU 59	173	38	4466	-29.35	-0.13	-0.05
54	SLU 60	181	37	4399	-25.79	0.04	-0.05
54	SLU 61	183	39	4609	-30.03	0.03	-0.05
54	SLU 62	178	37	4417	-25.98	-0.08	-0.05
54	SLU 63	181	39	4627	-30.21	-0.09	-0.05
54	SLU 64	170	35	4156	-24.6	-0.07	-0.04
54	SLU 65	174	38	4507	-31.66	-0.08	-0.05
54	SLU 66	168	36	4195	-25.01	-0.21	-0.05
54	SLU 67	170	38	4406	-29.25	-0.21	-0.05
54	SLU 68	171	39	4524	-31.84	-0.2	-0.05
54	SLU 69	165	36	4213	-25.19	-0.32	-0.05
54	SLU 70	167	38	4423	-29.43	-0.33	-0.05
54	SLU 71	164	35	4191	-24.96	-0.31	-0.05
54	SLU 72	166	38	4401	-29.2	-0.32	-0.05
54	SLU 73	184	42	4923	-34.1	-0.26	-0.06
54	SLU 74	178	39	4612	-27.45	-0.38	-0.05
54	SLU 75	180	41	4822	-31.69	-0.39	-0.05
54	SLU 76	181	42	4941	-34.29	-0.38	-0.06
54	SLU 77	175	39	4629	-27.63	-0.5	-0.05
54	SLU 78	178	41	4840	-31.87	-0.51	-0.06
54	SLU 79	174	39	4608	-27.4	-0.49	-0.05
54	SLU 80	176	41	4818	-31.64	-0.49	-0.05
54	SLU 81	184	40	4751	-28.09	-0.33	-0.05
54	SLU 82	187	42	4961	-32.33	-0.33	-0.06
54	SLU 83	181	40	4768	-28.27	-0.44	-0.05
54	SLU 84	184	42	4979	-32.51	-0.45	-0.06
54	SLE RA 1	130	26	3120	-18.42	0.03	-0.03
54	SLE RA 2	133	29	3353	-23.13	0.02	-0.04
54	SLE RA 3	129	27	3146	-18.69	-0.06	-0.03
54	SLE RA 4	130	28	3286	-21.52	-0.07	-0.04
54	SLE RA 5	131	29	3365	-23.25	-0.06	-0.04
54	SLE RA 6	127	27	3157	-18.81	-0.14	-0.03
54	SLE RA 7	128	28	3298	-21.64	-0.15	-0.04
54	SLE RA 8	126	27	3143	-18.66	-0.13	-0.03
54	SLE RA 9	128	28	3283	-21.49	-0.14	-0.04
54	SLE RA 10	139	31	3631	-24.75	-0.1	-0.04
54	SLE RA 11	135	29	3423	-20.32	-0.18	-0.04
54	SLE RA 12	137	30	3564	-23.15	-0.19	-0.04
54	SLE RA 13	137	31	3643	-24.88	-0.18	-0.04
54	SLE RA 14	134	29	3435	-20.44	-0.26	-0.04
54	SLE RA 15	135	31	3575	-23.27	-0.27	-0.04
54	SLE RA 16	133	29	3421	-20.29	-0.25	-0.04
54	SLE RA 17	134	30	3561	-23.11	-0.26	-0.04
54	SLE RA 18	140	30	3516	-20.74	-0.14	-0.04
54	SLE RA 19	141	31	3656	-23.57	-0.15	-0.04
54	SLE RA 20	138	30	3528	-20.87	-0.22	-0.04
54	SLE RA 21	139	31	3668	-23.69	-0.23	-0.04
54	SLE FR 1	130	26	3120	-18.42	0.03	-0.03
54	SLE FR 2	131	27	3166	-19.36	0.02	-0.03
54	SLE FR 3	129	26	3124	-18.47	-0.01	-0.03
54	SLE FR 4	133	28	3285	-20.06	-0.03	-0.04
54	SLE FR 5	132	27	3243	-19.16	-0.06	-0.03
54	SLE FR 6	135	28	3318	-19.58	-0.06	-0.04
54	SLE QP 1	130	26	3120	-18.42	0.03	-0.03
54	SLE QP 2	133	27	3239	-19.12	-0.03	-0.03
54	SLD 1	917	36	3582	-28.56	21.86	-0.05
54	SLD 2	917	36	3582	-28.56	21.86	-0.05
54	SLD 3	797	27	3257	-16.74	18.87	-0.03
54	SLD 4	797	27	3257	-16.74	18.87	-0.03
54	SLD 5	550	43	3835	-39.88	11.08	-0.06
54	SLD 6	550	43	3835	-39.88	11.08	-0.06
54	SLD 7	150	14	2751	-0.47	1.11	-0.01
54	SLD 8	150	14	2751	-0.47	1.11	-0.01

Nodo	Cont.	Reazione a traslazione			Reazione a rotazione		
Ind.	N.br.	x	y	z	x	y	z
54	SLD 9	115	41	3727	-37.76	-1.16	-0.06
54	SLD 10	115	41	3727	-37.76	-1.16	-0.06
54	SLD 11	-284	11	2642	1.65	-11.13	-0.01
54	SLD 12	-284	11	2642	1.65	-11.13	-0.01
54	SLD 13	-531	28	3220	-21.5	-18.92	-0.04
54	SLD 14	-531	28	3220	-21.5	-18.92	-0.04
54	SLD 15	-651	19	2895	-9.67	-21.91	-0.02
54	SLD 16	-651	19	2895	-9.67	-21.91	-0.02
54	SLV 1	1973	48	4060	-42.33	51.35	-0.07
54	SLV 2	1973	48	4060	-42.33	51.35	-0.07
54	SLV 3	1677	26	3273	-12.81	43.93	-0.03
54	SLV 4	1677	26	3273	-12.81	43.93	-0.03
54	SLV 5	1134	67	4678	-70.86	26.64	-0.1
54	SLV 6	1134	67	4678	-70.86	26.64	-0.1
54	SLV 7	147	-6	2055	27.55	1.91	0.03
54	SLV 8	147	-6	2055	27.55	1.91	0.03
54	SLV 9	118	61	4422	-65.79	-1.96	-0.1
54	SLV 10	118	61	4422	-65.79	-1.96	-0.1
54	SLV 11	-868	-12	1799	32.63	-26.69	0.03
54	SLV 12	-868	-12	1799	32.63	-26.69	0.03
54	SLV 13	-1411	28	3204	-25.42	-43.98	-0.04
54	SLV 14	-1411	28	3204	-25.42	-43.98	-0.04
54	SLV 15	-1707	7	2417	4.1	-51.4	0
54	SLV 16	-1707	7	2417	4.1	-51.4	0
55	SLU 1	133	15	3241	-11.93	6.64	-0.17
55	SLU 2	118	14	3645	-15.98	6.05	-0.19
55	SLU 3	131	15	3286	-12.21	6.64	-0.18
55	SLU 4	122	15	3528	-14.64	6.29	-0.19
55	SLU 5	115	14	3666	-16.11	5.99	-0.2
55	SLU 6	129	15	3307	-12.33	6.59	-0.18
55	SLU 7	120	15	3549	-14.76	6.23	-0.19
55	SLU 8	128	15	3282	-12.18	6.52	-0.18
55	SLU 9	119	15	3525	-14.61	6.17	-0.19
55	SLU 10	127	16	4089	-17.63	6.66	-0.22
55	SLU 11	141	17	3730	-13.85	7.26	-0.2
55	SLU 12	132	17	3972	-16.28	6.91	-0.21
55	SLU 13	124	16	4109	-17.75	6.6	-0.22
55	SLU 14	138	17	3750	-13.98	7.2	-0.2
55	SLU 15	129	17	3992	-16.41	6.85	-0.22
55	SLU 16	137	17	3726	-13.83	7.13	-0.2
55	SLU 17	128	17	3968	-16.26	6.78	-0.21
55	SLU 18	146	18	3875	-14.28	7.51	-0.21
55	SLU 19	137	17	4117	-16.71	7.16	-0.22
55	SLU 20	143	18	3895	-14.41	7.45	-0.21
55	SLU 21	134	18	4138	-16.84	7.1	-0.22
55	SLU 22	136	17	3620	-13.47	7.05	-0.2
55	SLU 23	121	16	4023	-17.53	6.46	-0.22
55	SLU 24	134	17	3664	-13.75	7.06	-0.2
55	SLU 25	125	17	3907	-16.18	6.7	-0.21
55	SLU 26	118	16	4044	-17.65	6.4	-0.22
55	SLU 27	132	17	3685	-13.88	7	-0.2
55	SLU 28	123	17	3927	-16.31	6.64	-0.21
55	SLU 29	130	17	3661	-13.72	6.93	-0.2
55	SLU 30	121	17	3903	-16.16	6.58	-0.21
55	SLU 31	130	18	4467	-19.17	7.07	-0.24
55	SLU 32	143	19	4108	-15.4	7.67	-0.23
55	SLU 33	134	19	4350	-17.83	7.32	-0.24
55	SLU 34	127	18	4487	-19.3	7.01	-0.24
55	SLU 35	141	19	4128	-15.52	7.61	-0.23
55	SLU 36	132	19	4371	-17.95	7.26	-0.24
55	SLU 37	140	19	4104	-15.37	7.54	-0.23
55	SLU 38	131	19	4346	-17.8	7.19	-0.24
55	SLU 39	149	20	4253	-15.83	7.92	-0.23
55	SLU 40	140	19	4495	-18.26	7.57	-0.24
55	SLU 41	146	20	4274	-15.95	7.86	-0.23
55	SLU 42	137	20	4516	-18.38	7.51	-0.25
55	SLU 43	172	18	4084	-14.98	8.49	-0.22
55	SLU 44	157	18	4488	-19.03	7.9	-0.24
55	SLU 45	170	19	4129	-15.26	8.49	-0.22
55	SLU 46	161	18	4371	-17.69	8.14	-0.23
55	SLU 47	154	18	4508	-19.16	7.84	-0.24
55	SLU 48	168	19	4149	-15.38	8.44	-0.22
55	SLU 49	159	19	4392	-17.81	8.08	-0.24
55	SLU 50	167	19	4125	-15.23	8.37	-0.22
55	SLU 51	158	18	4367	-17.66	8.02	-0.23
55	SLU 52	166	20	4931	-20.68	8.51	-0.26
55	SLU 53	180	21	4572	-16.9	9.11	-0.25
55	SLU 54	171	21	4814	-19.33	8.76	-0.26
55	SLU 55	163	20	4952	-20.8	8.45	-0.26
55	SLU 56	177	21	4593	-17.03	9.05	-0.25
55	SLU 57	168	21	4835	-19.46	8.7	-0.26
55	SLU 58	176	21	4568	-16.88	8.98	-0.25
55	SLU 59	167	21	4811	-19.31	8.63	-0.26
55	SLU 60	185	21	4717	-17.33	9.36	-0.25
55	SLU 61	176	21	4960	-19.76	9.01	-0.27
55	SLU 62	182	22	4738	-17.46	9.3	-0.26
55	SLU 63	173	21	4980	-19.89	8.95	-0.27
55	SLU 64	175	20	4462	-16.52	8.9	-0.24
55	SLU 65	160	20	4866	-20.58	8.31	-0.26
55	SLU 66	173	21	4507	-16.8	8.9	-0.25

Nodo	Cont.	Reazione a traslazione			Reazione a rotazione		
Ind.	N.br.	x	y	z	x	y	z
55	SLU 67	164	20	4749	-19.23	8.55	-0.26
55	SLU 68	157	20	4887	-20.7	8.25	-0.26
55	SLU 69	171	21	4528	-16.93	8.85	-0.25
55	SLU 70	162	21	4770	-19.36	8.49	-0.26
55	SLU 71	169	21	4503	-16.77	8.78	-0.25
55	SLU 72	160	20	4746	-19.2	8.43	-0.26
55	SLU 73	169	22	5310	-22.22	8.92	-0.29
55	SLU 74	182	23	4951	-18.45	9.52	-0.27
55	SLU 75	173	23	5193	-20.88	9.17	-0.28
55	SLU 76	166	22	5330	-22.35	8.86	-0.29
55	SLU 77	180	23	4971	-18.57	9.46	-0.27
55	SLU 78	171	23	5213	-21	9.11	-0.28
55	SLU 79	179	23	4947	-18.42	9.39	-0.27
55	SLU 80	169	23	5189	-20.85	9.04	-0.28
55	SLU 81	188	23	5096	-18.88	9.77	-0.28
55	SLU 82	179	23	5338	-21.31	9.42	-0.29
55	SLU 83	185	24	5116	-19	9.71	-0.28
55	SLU 84	176	23	5359	-21.43	9.36	-0.29
55	SLE RA 1	134	15	3349	-12.37	6.75	-0.18
55	SLE RA 2	124	15	3619	-15.07	6.36	-0.19
55	SLE RA 3	133	15	3379	-12.56	6.76	-0.18
55	SLE RA 4	127	15	3541	-14.18	6.52	-0.19
55	SLE RA 5	122	15	3632	-15.16	6.32	-0.2
55	SLE RA 6	131	16	3393	-12.64	6.72	-0.18
55	SLE RA 7	125	15	3554	-14.26	6.49	-0.19
55	SLE RA 8	130	15	3377	-12.54	6.67	-0.18
55	SLE RA 9	124	15	3538	-14.16	6.44	-0.19
55	SLE RA 10	130	16	3914	-16.17	6.77	-0.21
55	SLE RA 11	139	17	3675	-13.65	7.17	-0.2
55	SLE RA 12	133	17	3836	-15.27	6.93	-0.21
55	SLE RA 13	128	16	3928	-16.25	6.73	-0.21
55	SLE RA 14	137	17	3689	-13.74	7.13	-0.2
55	SLE RA 15	131	17	3850	-15.36	6.89	-0.21
55	SLE RA 16	136	17	3672	-13.64	7.08	-0.2
55	SLE RA 17	130	17	3834	-15.26	6.85	-0.21
55	SLE RA 18	143	17	3772	-13.94	7.34	-0.2
55	SLE RA 19	136	17	3933	-15.56	7.1	-0.21
55	SLE RA 20	141	17	3785	-14.02	7.3	-0.21
55	SLE RA 21	135	17	3947	-15.64	7.06	-0.21
55	SLE FR 1	134	15	3349	-12.37	6.75	-0.18
55	SLE FR 2	132	15	3403	-12.91	6.67	-0.18
55	SLE FR 3	133	15	3355	-12.4	6.74	-0.18
55	SLE FR 4	134	16	3530	-13.38	6.85	-0.19
55	SLE FR 5	136	16	3482	-12.87	6.91	-0.19
55	SLE FR 6	138	16	3561	-13.15	7.04	-0.19
55	SLE QP 1	134	15	3349	-12.37	6.75	-0.18
55	SLE QP 2	136	16	3476	-12.84	6.93	-0.19
55	SLD 1	949	22	3515	-18.71	32.35	-0.25
55	SLD 2	949	22	3515	-18.71	32.35	-0.25
55	SLD 3	833	18	3088	-11.82	28.7	-0.19
55	SLD 4	833	18	3088	-11.82	28.7	-0.19
55	SLD 5	557	22	4136	-25.06	20.1	-0.29
55	SLD 6	557	22	4136	-25.06	20.1	-0.29
55	SLD 7	169	12	2712	-2.08	7.91	-0.11
55	SLD 8	169	12	2712	-2.08	7.91	-0.11
55	SLD 9	104	20	4241	-23.6	5.94	-0.27
55	SLD 10	104	20	4241	-23.6	5.94	-0.27
55	SLD 11	-284	9	2816	-0.62	-6.25	-0.09
55	SLD 12	-284	9	2816	-0.62	-6.25	-0.09
55	SLD 13	-560	13	3864	-13.86	-14.84	-0.18
55	SLD 14	-560	13	3864	-13.86	-14.84	-0.18
55	SLD 15	-677	10	3437	-6.97	-18.5	-0.13
55	SLD 16	-677	10	3437	-6.97	-18.5	-0.13
55	SLV 1	2045	29	3578	-27.17	66.6	-0.32
55	SLV 2	2045	29	3578	-27.17	66.6	-0.32
55	SLV 3	1758	22	2541	-10.03	57.59	-0.19
55	SLV 4	1758	22	2541	-10.03	57.59	-0.19
55	SLV 5	1143	31	5078	-43.14	38.48	-0.43
55	SLV 6	1143	31	5078	-43.14	38.48	-0.43
55	SLV 7	188	7	1624	14	8.47	0.01
55	SLV 8	188	7	1624	14	8.47	0.01
55	SLV 9	84	25	5328	-39.68	5.38	-0.38
55	SLV 10	84	25	5328	-39.68	5.38	-0.38
55	SLV 11	-871	1	1874	17.45	-24.63	0.05
55	SLV 12	-871	1	1874	17.45	-24.63	0.05
55	SLV 13	-1485	10	4411	-15.65	-43.74	-0.18
55	SLV 14	-1485	10	4411	-15.65	-43.74	-0.18
55	SLV 15	-1772	3	3375	1.49	-52.74	-0.05
55	SLV 16	-1772	3	3375	1.49	-52.74	-0.05
56	SLU 1	-49	9	3474	-6.93	-7.59	0.11
56	SLU 2	-74	9	3954	-9.08	-8.98	0.2
56	SLU 3	-55	10	3524	-7.08	-7.93	0.12
56	SLU 4	-70	9	3813	-8.38	-8.77	0.17
56	SLU 5	-78	9	3978	-9.16	-9.21	0.2
56	SLU 6	-59	10	3548	-7.16	-8.15	0.12
56	SLU 7	-74	10	3836	-8.46	-8.99	0.17
56	SLU 8	-58	10	3521	-7.08	-8.03	0.12
56	SLU 9	-73	9	3809	-8.37	-8.87	0.17
56	SLU 10	-89	10	4423	-10.01	-10.27	0.21
56	SLU 11	-69	11	3993	-8.01	-9.21	0.13

Nodo	Cont.	Reazione a traslazione			Reazione a rotazione		
Ind.	N.br.	x	y	z	x	y	z
56	SLU 12	-84	11	4281	-9.31	-10.05	0.18
56	SLU 13	-93	10	4446	-10.09	-10.49	0.21
56	SLU 14	-74	11	4016	-8.09	-9.43	0.13
56	SLU 15	-89	11	4305	-9.38	-10.27	0.18
56	SLU 16	-72	11	3989	-8	-9.31	0.13
56	SLU 17	-87	11	4278	-9.3	-10.15	0.18
56	SLU 18	-70	11	4143	-8.25	-9.42	0.14
56	SLU 19	-85	11	4431	-9.54	-10.26	0.19
56	SLU 20	-74	11	4167	-8.32	-9.64	0.14
56	SLU 21	-89	11	4455	-9.62	-10.48	0.19
56	SLU 22	-70	10	3877	-7.8	-9.07	0.13
56	SLU 23	-95	10	4358	-9.96	-10.47	0.21
56	SLU 24	-75	11	3928	-7.96	-9.42	0.13
56	SLU 25	-90	11	4216	-9.25	-10.25	0.18
56	SLU 26	-99	10	4382	-10.03	-10.69	0.21
56	SLU 27	-80	11	3951	-8.03	-9.64	0.13
56	SLU 28	-95	11	4240	-9.33	-10.48	0.18
56	SLU 29	-78	11	3925	-7.95	-9.51	0.13
56	SLU 30	-93	11	4213	-9.24	-10.35	0.18
56	SLU 31	-109	12	4827	-10.88	-11.75	0.23
56	SLU 32	-90	12	4396	-8.88	-10.7	0.15
56	SLU 33	-105	12	4685	-10.18	-11.54	0.2
56	SLU 34	-114	12	4850	-10.96	-11.97	0.23
56	SLU 35	-94	12	4420	-8.96	-10.92	0.15
56	SLU 36	-109	12	4708	-10.25	-11.76	0.2
56	SLU 37	-93	12	4393	-8.87	-10.8	0.15
56	SLU 38	-108	12	4681	-10.17	-11.63	0.2
56	SLU 39	-91	12	4547	-9.12	-10.9	0.15
56	SLU 40	-106	12	4835	-10.42	-11.74	0.2
56	SLU 41	-95	12	4570	-9.2	-11.12	0.15
56	SLU 42	-110	12	4859	-10.49	-11.96	0.2
56	SLU 43	-57	12	4378	-8.7	-9.35	0.14
56	SLU 44	-82	12	4858	-10.86	-10.75	0.22
56	SLU 45	-63	12	4428	-8.86	-9.7	0.15
56	SLU 46	-78	12	4716	-10.16	-10.54	0.2
56	SLU 47	-86	12	4882	-10.94	-10.97	0.23
56	SLU 48	-67	12	4452	-8.94	-9.92	0.15
56	SLU 49	-82	12	4740	-10.23	-10.76	0.2
56	SLU 50	-65	12	4425	-8.85	-9.8	0.15
56	SLU 51	-80	12	4713	-10.15	-10.63	0.2
56	SLU 52	-97	13	5327	-11.79	-12.03	0.24
56	SLU 53	-77	13	4897	-9.79	-10.98	0.16
56	SLU 54	-92	13	5185	-11.09	-11.82	0.21
56	SLU 55	-101	13	5350	-11.86	-12.25	0.24
56	SLU 56	-81	13	4920	-9.86	-11.2	0.16
56	SLU 57	-96	13	5208	-11.16	-12.04	0.21
56	SLU 58	-80	13	4893	-9.78	-11.08	0.16
56	SLU 59	-95	13	5182	-11.08	-11.92	0.21
56	SLU 60	-78	13	5047	-10.03	-11.18	0.17
56	SLU 61	-93	13	5335	-11.32	-12.02	0.21
56	SLU 62	-82	14	5070	-10.1	-11.41	0.17
56	SLU 63	-97	13	5359	-11.4	-12.24	0.22
56	SLU 64	-77	13	4781	-9.58	-10.84	0.16
56	SLU 65	-102	13	5262	-11.74	-12.24	0.24
56	SLU 66	-83	13	4832	-9.74	-11.18	0.16
56	SLU 67	-98	13	5120	-11.03	-12.02	0.21
56	SLU 68	-107	13	5285	-11.81	-12.46	0.24
56	SLU 69	-87	13	4855	-9.81	-11.4	0.16
56	SLU 70	-102	13	5144	-11.11	-12.24	0.21
56	SLU 71	-86	13	4828	-9.73	-11.28	0.16
56	SLU 72	-101	13	5117	-11.02	-12.12	0.21
56	SLU 73	-117	14	5730	-12.66	-13.52	0.26
56	SLU 74	-98	14	5300	-10.66	-12.46	0.18
56	SLU 75	-113	14	5589	-11.96	-13.3	0.23
56	SLU 76	-121	14	5754	-12.74	-13.74	0.26
56	SLU 77	-102	14	5324	-10.74	-12.69	0.18
56	SLU 78	-117	14	5612	-12.03	-13.52	0.23
56	SLU 79	-101	14	5297	-10.65	-12.56	0.18
56	SLU 80	-116	14	5585	-11.95	-13.4	0.23
56	SLU 81	-98	15	5450	-10.9	-12.67	0.18
56	SLU 82	-113	14	5739	-12.19	-13.51	0.23
56	SLU 83	-103	15	5474	-10.97	-12.89	0.18
56	SLU 84	-118	15	5762	-12.27	-13.73	0.23
56	SLE RA 1	-55	10	3589	-7.17	-8.01	0.12
56	SLE RA 2	-72	10	3910	-8.61	-8.94	0.17
56	SLE RA 3	-59	10	3623	-7.28	-8.24	0.12
56	SLE RA 4	-69	10	3815	-8.14	-8.8	0.15
56	SLE RA 5	-75	10	3925	-8.66	-9.09	0.17
56	SLE RA 6	-62	10	3639	-7.33	-8.39	0.12
56	SLE RA 7	-72	10	3831	-8.19	-8.95	0.15
56	SLE RA 8	-61	10	3621	-7.27	-8.31	0.12
56	SLE RA 9	-71	10	3813	-8.14	-8.87	0.15
56	SLE RA 10	-82	10	4222	-9.23	-9.8	0.18
56	SLE RA 11	-69	11	3935	-7.9	-9.1	0.13
56	SLE RA 12	-79	11	4127	-8.76	-9.65	0.16
56	SLE RA 13	-84	10	4238	-9.28	-9.94	0.18
56	SLE RA 14	-71	11	3951	-7.95	-9.24	0.13
56	SLE RA 15	-81	11	4143	-8.81	-9.8	0.16
56	SLE RA 16	-70	11	3933	-7.89	-9.16	0.13
56	SLE RA 17	-81	11	4125	-8.76	-9.72	0.16

Nodo	Cont.	Reazione a traslazione			Reazione a rotazione		
Ind.	N.br.	x	y	z	x	y	z
56	SLE RA 18	-69	11	4035	-8.06	-9.23	0.13
56	SLE RA 19	-79	11	4228	-8.92	-9.79	0.17
56	SLE RA 20	-72	11	4051	-8.11	-9.38	0.13
56	SLE RA 21	-82	11	4243	-8.97	-9.94	0.17
56	SLE FR 1	-55	10	3589	-7.17	-8.01	0.12
56	SLE FR 2	-58	10	3653	-7.46	-8.2	0.13
56	SLE FR 3	-56	10	3595	-7.19	-8.07	0.12
56	SLE FR 4	-63	10	3787	-7.73	-8.56	0.13
56	SLE FR 5	-60	10	3729	-7.46	-8.44	0.12
56	SLE FR 6	-62	10	3812	-7.62	-8.62	0.13
56	SLE QP 1	-55	10	3589	-7.17	-8.01	0.12
56	SLE QP 2	-59	10	3723	-7.44	-8.38	0.12
56	SLD 1	742	8	3777	-10.57	17.82	0.22
56	SLD 2	742	8	3777	-10.57	17.82	0.22
56	SLD 3	641	5	3207	-7.03	20.85	0.1
56	SLD 4	641	5	3207	-7.03	20.85	0.1
56	SLD 5	335	15	4604	-13.75	-5.1	0.35
56	SLD 6	335	15	4604	-13.75	-5.1	0.35
56	SLD 7	-3	3	2703	-1.94	4.98	-0.08
56	SLD 8	-3	3	2703	-1.94	4.98	-0.08
56	SLD 9	-116	17	4743	-12.93	-21.73	0.32
56	SLD 10	-116	17	4743	-12.93	-21.73	0.32
56	SLD 11	-453	5	2842	-1.13	-11.65	-0.1
56	SLD 12	-453	5	2842	-1.13	-11.65	-0.1
56	SLD 13	-760	15	4239	-7.85	-37.6	0.15
56	SLD 14	-760	15	4239	-7.85	-37.6	0.15
56	SLD 15	-861	11	3669	-4.3	-34.58	0.02
56	SLD 16	-861	11	3669	-4.3	-34.58	0.02
56	SLV 1	1822	6	3862	-15.03	52.63	0.37
56	SLV 2	1822	6	3862	-15.03	52.63	0.37
56	SLV 3	1571	-2	2479	-6.32	60.18	0.06
56	SLV 4	1571	-2	2479	-6.32	60.18	0.06
56	SLV 5	886	22	5862	-22.93	-1.52	0.68
56	SLV 6	886	22	5862	-22.93	-1.52	0.68
56	SLV 7	49	-7	1252	6.11	23.63	-0.38
56	SLV 8	49	-7	1252	6.11	23.63	-0.38
56	SLV 9	-167	27	6194	-20.99	-40.39	0.63
56	SLV 10	-167	27	6194	-20.99	-40.39	0.63
56	SLV 11	-1004	-2	1584	8.06	-15.24	-0.44
56	SLV 12	-1004	-2	1584	8.06	-15.24	-0.44
56	SLV 13	-1689	22	4967	-8.56	-76.93	0.19
56	SLV 14	-1689	22	4967	-8.56	-76.93	0.19
56	SLV 15	-1940	13	3584	0.15	-69.39	-0.13
56	SLV 16	-1940	13	3584	0.15	-69.39	-0.13
57	SLU 1	-134	497	5102	-16.47	-2.42	-0.02
57	SLU 2	-222	641	5880	-21.97	-5.42	-0.02
57	SLU 3	-142	507	5181	-16.76	-2.65	-0.02
57	SLU 4	-195	593	5648	-20.06	-4.45	-0.02
57	SLU 5	-227	646	5917	-22.09	-5.58	-0.02
57	SLU 6	-147	511	5219	-16.88	-2.82	-0.02
57	SLU 7	-200	598	5685	-20.18	-4.61	-0.02
57	SLU 8	-145	507	5178	-16.71	-2.75	-0.02
57	SLU 9	-197	593	5644	-20.01	-4.55	-0.02
57	SLU 10	-241	699	6557	-23.8	-5.83	-0.02
57	SLU 11	-162	564	5858	-18.58	-3.07	-0.02
57	SLU 12	-214	650	6325	-21.88	-4.86	-0.02
57	SLU 13	-246	703	6595	-23.92	-6	-0.02
57	SLU 14	-167	569	5896	-18.7	-3.23	-0.02
57	SLU 15	-219	655	6363	-22	-5.03	-0.02
57	SLU 16	-164	564	5855	-18.53	-3.17	-0.02
57	SLU 17	-217	650	6321	-21.84	-4.97	-0.02
57	SLU 18	-162	579	6069	-19.08	-3.01	-0.02
57	SLU 19	-215	666	6536	-22.38	-4.81	-0.02
57	SLU 20	-167	584	6107	-19.2	-3.18	-0.02
57	SLU 21	-220	670	6574	-22.5	-4.98	-0.02
57	SLU 22	-162	551	5693	-18.19	-3.12	-0.02
57	SLU 23	-249	695	6471	-23.7	-6.11	-0.02
57	SLU 24	-170	561	5772	-18.48	-3.35	-0.02
57	SLU 25	-222	647	6239	-21.78	-5.14	-0.02
57	SLU 26	-254	700	6508	-23.82	-6.28	-0.02
57	SLU 27	-175	565	5810	-18.6	-3.51	-0.02
57	SLU 28	-227	652	6276	-21.9	-5.31	-0.02
57	SLU 29	-172	561	5769	-18.43	-3.45	-0.02
57	SLU 30	-225	647	6235	-21.74	-5.25	-0.02
57	SLU 31	-269	753	7148	-25.52	-6.53	-0.02
57	SLU 32	-189	618	6449	-20.3	-3.76	-0.02
57	SLU 33	-242	705	6916	-23.6	-5.56	-0.02
57	SLU 34	-274	757	7186	-25.64	-6.69	-0.02
57	SLU 35	-194	623	6487	-20.42	-3.93	-0.02
57	SLU 36	-247	709	6954	-23.72	-5.73	-0.02
57	SLU 37	-192	618	6446	-20.26	-3.87	-0.02
57	SLU 38	-244	704	6912	-23.56	-5.66	-0.02
57	SLU 39	-190	634	6660	-20.8	-3.71	-0.02
57	SLU 40	-242	720	7127	-24.1	-5.51	-0.02
57	SLU 41	-195	638	6698	-20.92	-3.88	-0.02
57	SLU 42	-247	724	7165	-24.22	-5.67	-0.02
57	SLU 43	-165	628	6430	-20.82	-2.91	-0.02
57	SLU 44	-252	772	7207	-26.32	-5.9	-0.02
57	SLU 45	-173	637	6509	-21.11	-3.14	-0.02
57	SLU 46	-225	724	6976	-24.41	-4.93	-0.02

Nodo	Cont.	Reazione a traslazione			Reazione a rotazione		
Ind.	N.br.	x	y	z	x	y	z
57	SLU 47	-258	776	7245	-26.44	-6.07	-0.02
57	SLU 48	-178	642	6547	-21.23	-3.3	-0.02
57	SLU 49	-231	728	7013	-24.53	-5.1	-0.02
57	SLU 50	-176	637	6505	-21.06	-3.24	-0.02
57	SLU 51	-228	724	6972	-24.36	-5.04	-0.02
57	SLU 52	-272	829	7885	-28.15	-6.32	-0.02
57	SLU 53	-192	695	7186	-22.93	-3.55	-0.02
57	SLU 54	-245	781	7653	-26.23	-5.35	-0.02
57	SLU 55	-277	834	7923	-28.27	-6.49	-0.02
57	SLU 56	-198	700	7224	-23.05	-3.72	-0.02
57	SLU 57	-250	786	7691	-26.35	-5.52	-0.02
57	SLU 58	-195	695	7183	-22.88	-3.66	-0.02
57	SLU 59	-248	781	7649	-26.19	-5.45	-0.02
57	SLU 60	-193	710	7397	-23.43	-3.5	-0.02
57	SLU 61	-245	796	7864	-26.73	-5.3	-0.02
57	SLU 62	-198	715	7435	-23.55	-3.67	-0.02
57	SLU 63	-251	801	7902	-26.85	-5.46	-0.02
57	SLU 64	-192	682	7021	-22.54	-3.6	-0.02
57	SLU 65	-280	826	7799	-28.05	-6.6	-0.02
57	SLU 66	-200	692	7100	-22.83	-3.83	-0.02
57	SLU 67	-253	778	7567	-26.13	-5.63	-0.02
57	SLU 68	-285	830	7836	-28.17	-6.77	-0.02
57	SLU 69	-206	696	7138	-22.95	-4	-0.02
57	SLU 70	-258	782	7604	-26.25	-5.8	-0.02
57	SLU 71	-203	691	7097	-22.78	-3.94	-0.02
57	SLU 72	-255	778	7563	-26.09	-5.73	-0.02
57	SLU 73	-299	883	8476	-29.87	-7.01	-0.02
57	SLU 74	-220	749	7777	-24.65	-4.25	-0.02
57	SLU 75	-272	835	8244	-27.95	-6.05	-0.02
57	SLU 76	-305	888	8514	-29.99	-7.18	-0.02
57	SLU 77	-225	754	7815	-24.77	-4.42	-0.02
57	SLU 78	-278	840	8282	-28.07	-6.21	-0.02
57	SLU 79	-223	749	7774	-24.61	-4.35	-0.02
57	SLU 80	-275	835	8240	-27.91	-6.15	-0.02
57	SLU 81	-220	764	7988	-25.15	-4.2	-0.03
57	SLU 82	-273	850	8455	-28.45	-5.99	-0.03
57	SLU 83	-226	769	8026	-25.27	-4.36	-0.02
57	SLU 84	-278	855	8493	-28.57	-6.16	-0.02
57	SLE RA 1	-142	513	5271	-16.96	-2.62	-0.02
57	SLE RA 2	-200	609	5789	-20.63	-4.62	-0.02
57	SLE RA 3	-147	519	5323	-17.15	-2.77	-0.02
57	SLE RA 4	-182	577	5635	-19.35	-3.97	-0.02
57	SLE RA 5	-204	612	5814	-20.71	-4.73	-0.02
57	SLE RA 6	-151	522	5349	-17.23	-2.88	-0.02
57	SLE RA 7	-186	580	5660	-19.43	-4.08	-0.02
57	SLE RA 8	-149	519	5321	-17.12	-2.84	-0.02
57	SLE RA 9	-184	576	5632	-19.32	-4.04	-0.02
57	SLE RA 10	-213	647	6241	-21.85	-4.89	-0.02
57	SLE RA 11	-160	557	5775	-18.37	-3.05	-0.02
57	SLE RA 12	-195	615	6086	-20.57	-4.25	-0.02
57	SLE RA 13	-217	650	6266	-21.93	-5	-0.02
57	SLE RA 14	-164	560	5800	-18.45	-3.16	-0.02
57	SLE RA 15	-199	618	6111	-20.65	-4.36	-0.02
57	SLE RA 16	-162	557	5773	-18.34	-3.12	-0.02
57	SLE RA 17	-197	615	6084	-20.54	-4.32	-0.02
57	SLE RA 18	-161	568	5916	-18.7	-3.01	-0.02
57	SLE RA 19	-196	625	6227	-20.9	-4.21	-0.02
57	SLE RA 20	-164	571	5941	-18.78	-3.13	-0.02
57	SLE RA 21	-199	628	6252	-20.98	-4.32	-0.02
57	SLE FR 1	-142	513	5271	-16.96	-2.62	-0.02
57	SLE FR 2	-154	532	5374	-17.7	-3.02	-0.02
57	SLE FR 3	-143	514	5281	-17	-2.66	-0.02
57	SLE FR 4	-159	548	5568	-18.22	-3.14	-0.02
57	SLE FR 5	-149	530	5474	-17.52	-2.78	-0.02
57	SLE FR 6	-151	540	5593	-17.83	-2.82	-0.02
57	SLE QP 1	-142	513	5271	-16.96	-2.62	-0.02
57	SLE QP 2	-148	529	5464	-17.48	-2.74	-0.02
57	SLD 1	619	535	5526	-17.82	25.52	-0.08
57	SLD 2	619	535	5526	-17.82	25.52	-0.08
57	SLD 3	710	289	4508	-8.15	28.72	-0.06
57	SLD 4	710	289	4508	-8.15	28.72	-0.06
57	SLD 5	-55	904	7028	-32.25	0.88	-0.05
57	SLD 6	-55	904	7028	-32.25	0.88	-0.05
57	SLD 7	247	84	3632	-0.01	11.56	-0.01
57	SLD 8	247	84	3632	-0.01	11.56	-0.01
57	SLD 9	-542	975	7296	-34.96	-17.03	-0.02
57	SLD 10	-542	975	7296	-34.96	-17.03	-0.02
57	SLD 11	-240	154	3900	-2.71	-6.36	0.02
57	SLD 12	-240	154	3900	-2.71	-6.36	0.02
57	SLD 13	-1005	769	6421	-26.82	-34.19	0.03
57	SLD 14	-1005	769	6421	-26.82	-34.19	0.03
57	SLD 15	-914	523	5402	-17.15	-30.99	0.04
57	SLD 16	-914	523	5402	-17.15	-30.99	0.04
57	SLV 1	1637	548	5630	-18.44	63.04	-0.16
57	SLV 2	1637	548	5630	-18.44	63.04	-0.16
57	SLV 3	1863	-46	3163	4.88	71.06	-0.13
57	SLV 4	1863	-46	3163	4.88	71.06	-0.13
57	SLV 5	45	1434	9255	-53.14	4.84	-0.1
57	SLV 6	45	1434	9255	-53.14	4.84	-0.1
57	SLV 7	798	-543	1033	24.59	31.55	-0.01

Nodo	Cont.	Reazione a traslazione			Reazione a rotazione		
Ind.	N.br.	x	y	z	x	y	z
57	SLV 8	798	-543	1033	24.59	31.55	-0.01
57	SLV 9	-1094	1601	9895	-59.56	-37.03	-0.03
57	SLV 10	-1094	1601	9895	-59.56	-37.03	-0.03
57	SLV 11	-340	-376	1673	18.17	-10.32	0.07
57	SLV 12	-340	-376	1673	18.17	-10.32	0.07
57	SLV 13	-2158	1104	7765	-39.85	-76.53	0.09
57	SLV 14	-2158	1104	7765	-39.85	-76.53	0.09
57	SLV 15	-1932	511	5298	-16.53	-68.52	0.12
57	SLV 16	-1932	511	5298	-16.53	-68.52	0.12
58	SLU 1	-306	-6	3668	1.61	-12.91	-0.01
58	SLU 2	-444	-8	4130	1.9	-17.29	-0.02
58	SLU 3	-318	-6	3722	1.66	-13.39	-0.01
58	SLU 4	-401	-7	4000	1.83	-16.01	-0.02
58	SLU 5	-451	-8	4156	1.92	-17.55	-0.02
58	SLU 6	-325	-7	3749	1.68	-13.66	-0.01
58	SLU 7	-408	-7	4026	1.86	-16.28	-0.02
58	SLU 8	-319	-6	3721	1.65	-13.45	-0.01
58	SLU 9	-402	-7	3998	1.83	-16.07	-0.02
58	SLU 10	-477	-9	4637	2.18	-18.81	-0.02
58	SLU 11	-351	-7	4230	1.94	-14.91	-0.01
58	SLU 12	-433	-8	4507	2.12	-17.53	-0.02
58	SLU 13	-483	-9	4664	2.21	-19.07	-0.02
58	SLU 14	-357	-8	4256	1.96	-15.18	-0.01
58	SLU 15	-440	-8	4534	2.14	-17.8	-0.02
58	SLU 16	-352	-7	4228	1.94	-14.97	-0.01
58	SLU 17	-435	-8	4505	2.11	-17.59	-0.02
58	SLU 18	-352	-8	4393	2.01	-15.08	-0.01
58	SLU 19	-435	-8	4670	2.19	-17.71	-0.02
58	SLU 20	-359	-8	4419	2.04	-15.35	-0.01
58	SLU 21	-442	-9	4697	2.21	-17.97	-0.02
58	SLU 22	-349	-7	4104	1.87	-14.77	-0.01
58	SLU 23	-487	-8	4566	2.16	-19.14	-0.02
58	SLU 24	-361	-7	4158	1.91	-15.24	-0.01
58	SLU 25	-444	-8	4435	2.09	-17.86	-0.02
58	SLU 26	-494	-9	4592	2.18	-19.4	-0.02
58	SLU 27	-368	-7	4185	1.94	-15.51	-0.01
58	SLU 28	-451	-8	4462	2.11	-18.13	-0.02
58	SLU 29	-363	-7	4156	1.91	-15.3	-0.01
58	SLU 30	-446	-8	4434	2.08	-17.92	-0.02
58	SLU 31	-520	-10	5073	2.44	-20.66	-0.02
58	SLU 32	-394	-8	4666	2.2	-16.76	-0.01
58	SLU 33	-477	-9	4943	2.37	-19.38	-0.02
58	SLU 34	-527	-10	5100	2.46	-20.92	-0.02
58	SLU 35	-401	-9	4692	2.22	-17.03	-0.01
58	SLU 36	-484	-9	4969	2.39	-19.65	-0.02
58	SLU 37	-395	-8	4664	2.19	-16.82	-0.01
58	SLU 38	-478	-9	4941	2.37	-19.44	-0.02
58	SLU 39	-396	-9	4829	2.27	-16.94	-0.01
58	SLU 40	-478	-9	5106	2.45	-19.56	-0.02
58	SLU 41	-402	-9	4855	2.29	-17.2	-0.01
58	SLU 42	-485	-10	5132	2.47	-19.83	-0.02
58	SLU 43	-382	-8	4619	2.01	-16.15	-0.02
58	SLU 44	-521	-9	5081	2.3	-20.53	-0.03
58	SLU 45	-395	-8	4673	2.05	-16.63	-0.02
58	SLU 46	-478	-9	4951	2.23	-19.25	-0.02
58	SLU 47	-528	-9	5107	2.32	-20.79	-0.03
58	SLU 48	-402	-8	4700	2.08	-16.9	-0.02
58	SLU 49	-485	-9	4977	2.25	-19.52	-0.02
58	SLU 50	-396	-8	4672	2.05	-16.69	-0.02
58	SLU 51	-479	-9	4949	2.22	-19.31	-0.02
58	SLU 52	-553	-10	5588	2.58	-22.04	-0.03
58	SLU 53	-427	-9	5181	2.34	-18.15	-0.02
58	SLU 54	-510	-10	5458	2.51	-20.77	-0.02
58	SLU 55	-560	-10	5615	2.6	-22.31	-0.03
58	SLU 56	-434	-9	5207	2.36	-18.42	-0.02
58	SLU 57	-517	-10	5485	2.53	-21.04	-0.02
58	SLU 58	-429	-9	5179	2.33	-18.2	-0.02
58	SLU 59	-512	-10	5456	2.51	-20.83	-0.02
58	SLU 60	-429	-9	5344	2.41	-18.32	-0.02
58	SLU 61	-512	-10	5621	2.58	-20.95	-0.02
58	SLU 62	-436	-9	5370	2.43	-18.59	-0.02
58	SLU 63	-519	-10	5648	2.61	-21.21	-0.02
58	SLU 64	-426	-9	5055	2.26	-18.01	-0.02
58	SLU 65	-564	-10	5517	2.55	-22.38	-0.03
58	SLU 66	-438	-9	5109	2.31	-18.48	-0.02
58	SLU 67	-521	-10	5386	2.48	-21.1	-0.02
58	SLU 68	-571	-10	5543	2.57	-22.64	-0.03
58	SLU 69	-445	-9	5135	2.33	-18.75	-0.02
58	SLU 70	-528	-10	5413	2.51	-21.37	-0.02
58	SLU 71	-440	-9	5107	2.31	-18.54	-0.02
58	SLU 72	-522	-10	5385	2.48	-21.16	-0.02
58	SLU 73	-597	-11	6024	2.84	-23.9	-0.03
58	SLU 74	-471	-10	5617	2.59	-20	-0.02
58	SLU 75	-554	-11	5894	2.77	-22.62	-0.02
58	SLU 76	-604	-11	6051	2.86	-24.16	-0.03
58	SLU 77	-478	-10	5643	2.61	-20.27	-0.02
58	SLU 78	-560	-11	5920	2.79	-22.89	-0.02
58	SLU 79	-472	-10	5615	2.59	-20.06	-0.02
58	SLU 80	-555	-11	5892	2.76	-22.68	-0.02
58	SLU 81	-472	-10	5780	2.67	-20.18	-0.02

Nodo	Cont.	Reazione a traslazione			Reazione a rotazione		
Ind.	N.br.	x	y	z	x	y	z
58	SLU 82	-555	-11	6057	2.84	-22.8	-0.02
58	SLU 83	-479	-10	5806	2.69	-20.44	-0.02
58	SLU 84	-562	-11	6083	2.86	-23.06	-0.02
58	SLE RA 1	-318	-7	3792	1.68	-13.44	-0.01
58	SLE RA 2	-410	-7	4100	1.88	-16.36	-0.02
58	SLE RA 3	-326	-7	3829	1.72	-13.76	-0.01
58	SLE RA 4	-381	-7	4014	1.83	-15.51	-0.02
58	SLE RA 5	-415	-7	4118	1.89	-16.54	-0.02
58	SLE RA 6	-331	-7	3846	1.73	-13.94	-0.01
58	SLE RA 7	-386	-7	4031	1.85	-15.69	-0.02
58	SLE RA 8	-327	-7	3828	1.71	-13.8	-0.01
58	SLE RA 9	-382	-7	4012	1.83	-15.55	-0.02
58	SLE RA 10	-432	-8	4439	2.07	-17.37	-0.02
58	SLE RA 11	-348	-7	4167	1.9	-14.77	-0.01
58	SLE RA 12	-403	-8	4352	2.02	-16.52	-0.02
58	SLE RA 13	-437	-8	4456	2.08	-17.55	-0.02
58	SLE RA 14	-353	-7	4185	1.92	-14.95	-0.01
58	SLE RA 15	-408	-8	4370	2.04	-16.7	-0.02
58	SLE RA 16	-349	-7	4166	1.9	-14.81	-0.01
58	SLE RA 17	-404	-8	4351	2.02	-16.56	-0.02
58	SLE RA 18	-349	-8	4276	1.95	-14.89	-0.01
58	SLE RA 19	-404	-8	4461	2.07	-16.64	-0.02
58	SLE RA 20	-354	-8	4293	1.97	-15.07	-0.01
58	SLE RA 21	-409	-8	4478	2.08	-16.82	-0.02
58	SLE FR 1	-318	-7	3792	1.68	-13.44	-0.01
58	SLE FR 2	-336	-7	3854	1.72	-14.03	-0.01
58	SLE FR 3	-320	-7	3799	1.69	-13.51	-0.01
58	SLE FR 4	-346	-7	3999	1.8	-14.46	-0.01
58	SLE FR 5	-329	-7	3944	1.77	-13.95	-0.01
58	SLE FR 6	-334	-7	4034	1.82	-14.17	-0.01
58	SLE QP 1	-318	-7	3792	1.68	-13.44	-0.01
58	SLE QP 2	-327	-7	3937	1.76	-13.88	-0.01
58	SLD 1	396	-9	3942	2.53	11.64	-0.01
58	SLD 2	396	-9	3942	2.53	11.64	-0.01
58	SLD 3	570	-14	3394	4.01	17.23	0
58	SLD 4	570	-14	3394	4.01	17.23	0
58	SLD 5	-375	0	4770	-0.26	-14.69	-0.03
58	SLD 6	-375	0	4770	-0.26	-14.69	-0.03
58	SLD 7	207	-16	2943	4.69	3.93	0.01
58	SLD 8	207	-16	2943	4.69	3.93	0.01
58	SLD 9	-861	3	4931	-1.17	-31.68	-0.04
58	SLD 10	-861	3	4931	-1.17	-31.68	-0.04
58	SLD 11	-279	-13	3105	3.79	-13.06	0.01
58	SLD 12	-279	-13	3105	3.79	-13.06	0.01
58	SLD 13	-1225	1	4480	-0.49	-44.98	-0.03
58	SLD 14	-1225	1	4480	-0.49	-44.98	-0.03
58	SLD 15	-1050	-4	3932	1	-39.4	-0.02
58	SLD 16	-1050	-4	3932	1	-39.4	-0.02
58	SLV 1	1354	-13	3959	3.45	45.5	-0.01
58	SLV 2	1354	-13	3959	3.45	45.5	-0.01
58	SLV 3	1779	-25	2633	7.13	59.12	0.03
58	SLV 4	1779	-25	2633	7.13	59.12	0.03
58	SLV 5	-468	10	5955	-3.31	-16.73	-0.06
58	SLV 6	-468	10	5955	-3.31	-16.73	-0.06
58	SLV 7	950	-30	1535	8.95	28.69	0.05
58	SLV 8	950	-30	1535	8.95	28.69	0.05
58	SLV 9	-1604	17	6339	-5.42	-56.44	-0.08
58	SLV 10	-1604	17	6339	-5.42	-56.44	-0.08
58	SLV 11	-187	-23	1920	6.83	-11.02	0.04
58	SLV 12	-187	-23	1920	6.83	-11.02	0.04
58	SLV 13	-2434	11	5241	-3.6	-86.88	-0.05
58	SLV 14	-2434	11	5241	-3.6	-86.88	-0.05
58	SLV 15	-2008	-1	3916	0.08	-73.25	-0.02
58	SLV 16	-2008	-1	3916	0.08	-73.25	-0.02
59	SLU 1	-212	-9	3749	3.25	-7.37	0.08
59	SLU 2	-345	-12	4127	4.14	-11.95	0.09
59	SLU 3	-222	-9	3804	3.33	-7.72	0.08
59	SLU 4	-302	-11	4032	3.87	-10.46	0.09
59	SLU 5	-351	-12	4155	4.19	-12.16	0.09
59	SLU 6	-228	-10	3832	3.38	-7.92	0.08
59	SLU 7	-308	-11	4059	3.91	-10.67	0.09
59	SLU 8	-224	-9	3804	3.33	-7.78	0.08
59	SLU 9	-303	-11	4031	3.87	-10.53	0.09
59	SLU 10	-360	-13	4670	4.63	-12.58	0.1
59	SLU 11	-237	-11	4347	3.82	-8.35	0.09
59	SLU 12	-317	-12	4574	4.35	-11.1	0.1
59	SLU 13	-366	-13	4698	4.67	-12.79	0.11
59	SLU 14	-243	-11	4374	3.86	-8.56	0.09
59	SLU 15	-323	-12	4602	4.39	-11.3	0.1
59	SLU 16	-239	-11	4346	3.81	-8.41	0.09
59	SLU 17	-318	-12	4574	4.35	-11.16	0.1
59	SLU 18	-234	-11	4524	3.94	-8.28	0.09
59	SLU 19	-313	-13	4751	4.48	-11.02	0.1
59	SLU 20	-239	-11	4551	3.98	-8.48	0.09
59	SLU 21	-319	-13	4779	4.52	-11.23	0.1
59	SLU 22	-240	-10	4210	3.69	-8.39	0.09
59	SLU 23	-372	-13	4589	4.58	-12.97	0.1
59	SLU 24	-250	-11	4266	3.77	-8.73	0.09
59	SLU 25	-329	-12	4493	4.31	-11.48	0.1
59	SLU 26	-378	-13	4617	4.62	-13.17	0.1

Nodo	Cont.	Reazione a traslazione			Reazione a rotazione		
Ind.	N.br.	x	y	z	x	y	z
59	SLU 27	-255	-11	4293	3.81	-8.94	0.09
59	SLU 28	-335	-12	4521	4.35	-11.68	0.1
59	SLU 29	-251	-11	4265	3.77	-8.8	0.09
59	SLU 30	-331	-12	4493	4.31	-11.54	0.1
59	SLU 31	-387	-14	5131	5.06	-13.6	0.11
59	SLU 32	-264	-12	4808	4.25	-9.37	0.1
59	SLU 33	-344	-14	5035	4.79	-12.11	0.11
59	SLU 34	-393	-15	5159	5.1	-13.8	0.12
59	SLU 35	-270	-12	4836	4.29	-9.57	0.1
59	SLU 36	-350	-14	5063	4.83	-12.32	0.11
59	SLU 37	-266	-12	4808	4.25	-9.43	0.1
59	SLU 38	-345	-14	5035	4.79	-12.18	0.11
59	SLU 39	-261	-12	4985	4.38	-9.29	0.1
59	SLU 40	-340	-14	5212	4.91	-12.04	0.11
59	SLU 41	-266	-12	5013	4.42	-9.5	0.1
59	SLU 42	-346	-14	5240	4.95	-12.24	0.11
59	SLU 43	-267	-12	4715	4.08	-9.24	0.1
59	SLU 44	-400	-14	5094	4.97	-13.82	0.11
59	SLU 45	-277	-12	4771	4.16	-9.58	0.1
59	SLU 46	-357	-13	4998	4.7	-12.33	0.11
59	SLU 47	-405	-14	5122	5.01	-14.02	0.11
59	SLU 48	-283	-12	4798	4.2	-9.79	0.1
59	SLU 49	-362	-14	5026	4.74	-12.53	0.11
59	SLU 50	-278	-12	4770	4.16	-9.65	0.1
59	SLU 51	-358	-13	4998	4.7	-12.39	0.11
59	SLU 52	-415	-16	5636	5.45	-14.45	0.12
59	SLU 53	-292	-13	5313	4.64	-10.22	0.11
59	SLU 54	-371	-15	5540	5.18	-12.96	0.12
59	SLU 55	-420	-16	5664	5.49	-14.65	0.12
59	SLU 56	-297	-13	5341	4.68	-10.42	0.11
59	SLU 57	-377	-15	5568	5.22	-13.17	0.12
59	SLU 58	-293	-13	5313	4.64	-10.28	0.11
59	SLU 59	-373	-15	5540	5.18	-13.03	0.12
59	SLU 60	-288	-13	5490	4.77	-10.14	0.11
59	SLU 61	-368	-15	5717	5.3	-12.89	0.12
59	SLU 62	-294	-14	5518	4.81	-10.35	0.11
59	SLU 63	-373	-15	5745	5.34	-13.09	0.12
59	SLU 64	-294	-13	5176	4.51	-10.25	0.11
59	SLU 65	-427	-15	5555	5.41	-14.83	0.12
59	SLU 66	-304	-13	5232	4.6	-10.6	0.11
59	SLU 67	-384	-15	5459	5.13	-13.34	0.12
59	SLU 68	-432	-16	5583	5.45	-15.03	0.12
59	SLU 69	-310	-13	5260	4.64	-10.8	0.11
59	SLU 70	-389	-15	5487	5.17	-13.55	0.12
59	SLU 71	-305	-13	5232	4.6	-10.66	0.11
59	SLU 72	-385	-15	5459	5.13	-13.41	0.12
59	SLU 73	-442	-17	6098	5.89	-15.46	0.13
59	SLU 74	-319	-14	5774	5.08	-11.23	0.12
59	SLU 75	-398	-16	6002	5.61	-13.98	0.13
59	SLU 76	-447	-17	6125	5.93	-15.67	0.13
59	SLU 77	-324	-14	5802	5.12	-11.43	0.12
59	SLU 78	-404	-16	6030	5.66	-14.18	0.13
59	SLU 79	-320	-14	5774	5.08	-11.29	0.12
59	SLU 80	-400	-16	6002	5.61	-14.04	0.13
59	SLU 81	-315	-15	5951	5.2	-11.16	0.12
59	SLU 82	-395	-16	6179	5.74	-13.9	0.13
59	SLU 83	-321	-15	5979	5.24	-11.36	0.12
59	SLU 84	-401	-16	6206	5.78	-14.11	0.13
59	SLE RA 1	-220	-10	3880	3.38	-7.66	0.08
59	SLE RA 2	-309	-11	4133	3.97	-10.72	0.09
59	SLE RA 3	-227	-10	3918	3.43	-7.89	0.08
59	SLE RA 4	-280	-11	4069	3.79	-9.72	0.09
59	SLE RA 5	-312	-11	4152	4	-10.85	0.09
59	SLE RA 6	-231	-10	3936	3.46	-8.03	0.08
59	SLE RA 7	-284	-11	4088	3.82	-9.86	0.09
59	SLE RA 8	-228	-10	3917	3.43	-7.94	0.08
59	SLE RA 9	-281	-11	4069	3.79	-9.77	0.09
59	SLE RA 10	-319	-12	4495	4.29	-11.14	0.1
59	SLE RA 11	-237	-11	4279	3.75	-8.32	0.09
59	SLE RA 12	-290	-12	4431	4.11	-10.15	0.09
59	SLE RA 13	-322	-12	4513	4.32	-11.27	0.1
59	SLE RA 14	-241	-11	4298	3.78	-8.45	0.09
59	SLE RA 15	-294	-12	4449	4.14	-10.28	0.09
59	SLE RA 16	-238	-11	4279	3.75	-8.36	0.09
59	SLE RA 17	-291	-12	4431	4.11	-10.19	0.09
59	SLE RA 18	-234	-11	4397	3.84	-8.27	0.09
59	SLE RA 19	-287	-12	4549	4.19	-10.1	0.1
59	SLE RA 20	-238	-11	4416	3.86	-8.4	0.09
59	SLE RA 21	-291	-12	4567	4.22	-10.23	0.1
59	SLE FR 1	-220	-10	3880	3.38	-7.66	0.08
59	SLE FR 2	-238	-10	3931	3.5	-8.27	0.08
59	SLE FR 3	-222	-10	3888	3.39	-7.72	0.08
59	SLE FR 4	-242	-10	4086	3.63	-8.46	0.08
59	SLE FR 5	-226	-10	4043	3.53	-7.9	0.08
59	SLE FR 6	-227	-10	4139	3.61	-7.97	0.08
59	SLE QP 1	-220	-10	3880	3.38	-7.66	0.08
59	SLE QP 2	-224	-10	4035	3.51	-7.85	0.08
59	SLD 1	453	-17	3955	6.02	17.22	0.11
59	SLD 2	453	-17	3955	6.02	17.22	0.11
59	SLD 3	635	-11	3519	4.1	22.87	0.08

Nodo	Cont.	Reazione a traslazione			Reazione a rotazione		
Ind.	N.br.	x	y	z	x	y	z
59	SLD 4	635	-11	3519	4.1	22.87	0.08
59	SLD 5	-298	-21	4673	7.18	-8.89	0.13
59	SLD 6	-298	-21	4673	7.18	-8.89	0.13
59	SLD 7	310	-2	3219	0.78	9.94	0.04
59	SLD 8	310	-2	3219	0.78	9.94	0.04
59	SLD 9	-759	-18	4852	6.25	-25.63	0.12
59	SLD 10	-759	-18	4852	6.25	-25.63	0.12
59	SLD 11	-151	1	3398	-0.15	-6.8	0.03
59	SLD 12	-151	1	3398	-0.15	-6.8	0.03
59	SLD 13	-1084	-8	4552	2.92	-38.56	0.08
59	SLD 14	-1084	-8	4552	2.92	-38.56	0.08
59	SLD 15	-902	-3	4116	1.01	-32.91	0.05
59	SLD 16	-902	-3	4116	1.01	-32.91	0.05
59	SLV 1	1349	-27	3853	9.5	50.42	0.15
59	SLV 2	1349	-27	3853	9.5	50.42	0.15
59	SLV 3	1795	-13	2805	4.78	64.3	0.09
59	SLV 4	1795	-13	2805	4.78	64.3	0.09
59	SLV 5	-429	-36	5569	12.48	-11.41	0.21
59	SLV 6	-429	-36	5569	12.48	-11.41	0.21
59	SLV 7	1058	10	2078	-3.28	34.84	-0.02
59	SLV 8	1058	10	2078	-3.28	34.84	-0.02
59	SLV 9	-1507	-30	5993	10.31	-50.53	0.18
59	SLV 10	-1507	-30	5993	10.31	-50.53	0.18
59	SLV 11	-20	16	2501	-5.45	-4.28	-0.04
59	SLV 12	-20	16	2501	-5.45	-4.28	-0.04
59	SLV 13	-2244	-7	5265	2.25	-79.99	0.08
59	SLV 14	-2244	-7	5265	2.25	-79.99	0.08
59	SLV 15	-1798	7	4218	-2.48	-66.11	0.01
59	SLV 16	-1798	7	4218	-2.48	-66.11	0.01
60	SLU 1	-186	-10	4166	3.03	-9.01	-0.03
60	SLU 2	-301	-12	4529	3.78	-13.02	-0.02
60	SLU 3	-195	-10	4231	3.1	-9.37	-0.03
60	SLU 4	-264	-11	4448	3.55	-11.78	-0.02
60	SLU 5	-305	-12	4562	3.82	-13.22	-0.02
60	SLU 6	-200	-11	4264	3.14	-9.57	-0.03
60	SLU 7	-268	-12	4481	3.59	-11.98	-0.02
60	SLU 8	-196	-10	4233	3.11	-9.4	-0.03
60	SLU 9	-264	-11	4450	3.56	-11.81	-0.02
60	SLU 10	-309	-13	5157	4.23	-13.75	-0.03
60	SLU 11	-203	-12	4859	3.55	-10.1	-0.03
60	SLU 12	-272	-13	5076	4	-12.51	-0.03
60	SLU 13	-314	-13	5190	4.27	-13.95	-0.03
60	SLU 14	-208	-12	4892	3.58	-10.3	-0.03
60	SLU 15	-277	-13	5109	4.03	-12.71	-0.03
60	SLU 16	-204	-12	4861	3.55	-10.13	-0.03
60	SLU 17	-273	-13	5078	4	-12.54	-0.03
60	SLU 18	-198	-12	5063	3.67	-10.05	-0.03
60	SLU 19	-267	-13	5281	4.12	-12.46	-0.03
60	SLU 20	-203	-12	5097	3.71	-10.25	-0.03
60	SLU 21	-272	-13	5314	4.16	-12.65	-0.03
60	SLU 22	-207	-11	4701	3.43	-10.12	-0.03
60	SLU 23	-321	-13	5063	4.18	-14.13	-0.02
60	SLU 24	-215	-12	4765	3.49	-10.49	-0.03
60	SLU 25	-284	-13	4983	3.95	-12.89	-0.03
60	SLU 26	-326	-13	5096	4.21	-14.33	-0.02
60	SLU 27	-220	-12	4798	3.53	-10.69	-0.03
60	SLU 28	-289	-13	5016	3.98	-13.09	-0.03
60	SLU 29	-216	-12	4767	3.5	-10.52	-0.03
60	SLU 30	-285	-13	4985	3.95	-12.93	-0.03
60	SLU 31	-330	-15	5691	4.62	-14.86	-0.03
60	SLU 32	-224	-13	5393	3.94	-11.22	-0.03
60	SLU 33	-293	-14	5611	4.39	-13.62	-0.03
60	SLU 34	-334	-15	5724	4.66	-15.06	-0.03
60	SLU 35	-229	-13	5426	3.98	-11.41	-0.03
60	SLU 36	-297	-14	5644	4.43	-13.82	-0.03
60	SLU 37	-225	-13	5395	3.94	-11.25	-0.03
60	SLU 38	-293	-14	5613	4.4	-13.65	-0.03
60	SLU 39	-219	-13	5598	4.06	-11.16	-0.03
60	SLU 40	-287	-14	5815	4.51	-13.57	-0.03
60	SLU 41	-223	-14	5631	4.1	-11.36	-0.03
60	SLU 42	-292	-15	5849	4.55	-13.77	-0.03
60	SLU 43	-235	-13	5233	3.81	-11.33	-0.03
60	SLU 44	-350	-15	5595	4.56	-15.34	-0.03
60	SLU 45	-244	-13	5297	3.88	-11.69	-0.03
60	SLU 46	-312	-14	5515	4.33	-14.1	-0.03
60	SLU 47	-354	-15	5628	4.6	-15.54	-0.03
60	SLU 48	-248	-13	5330	3.91	-11.89	-0.03
60	SLU 49	-317	-14	5548	4.36	-14.3	-0.03
60	SLU 50	-244	-13	5299	3.88	-11.72	-0.03
60	SLU 51	-313	-14	5517	4.33	-14.13	-0.03
60	SLU 52	-358	-16	6223	5.01	-16.07	-0.03
60	SLU 53	-252	-14	5925	4.32	-12.42	-0.04
60	SLU 54	-321	-15	6143	4.77	-14.83	-0.03
60	SLU 55	-363	-16	6256	5.04	-16.27	-0.03
60	SLU 56	-257	-15	5958	4.36	-12.62	-0.04
60	SLU 57	-326	-16	6176	4.81	-15.03	-0.03
60	SLU 58	-253	-14	5927	4.33	-12.45	-0.04
60	SLU 59	-322	-16	6145	4.78	-14.86	-0.03
60	SLU 60	-247	-15	6130	4.44	-12.37	-0.04
60	SLU 61	-316	-16	6347	4.9	-14.78	-0.03

Nodo	Cont.	Reazione a traslazione			Reazione a rotazione		
Ind.	N.br.	x	y	z	x	y	z
60	SLU 62	-252	-15	6163	4.48	-12.57	-0.04
60	SLU 63	-321	-16	6381	4.93	-14.97	-0.03
60	SLU 64	-255	-14	5767	4.2	-12.44	-0.03
60	SLU 65	-370	-16	6130	4.95	-16.45	-0.03
60	SLU 66	-264	-14	5832	4.27	-12.81	-0.04
60	SLU 67	-333	-15	6049	4.72	-15.21	-0.03
60	SLU 68	-375	-16	6163	4.99	-16.65	-0.03
60	SLU 69	-269	-14	5865	4.31	-13.01	-0.04
60	SLU 70	-338	-15	6082	4.76	-15.41	-0.03
60	SLU 71	-265	-14	5834	4.27	-12.84	-0.04
60	SLU 72	-334	-15	6051	4.72	-15.25	-0.03
60	SLU 73	-379	-17	6758	5.4	-17.18	-0.03
60	SLU 74	-273	-16	6460	4.72	-13.54	-0.04
60	SLU 75	-341	-17	6677	5.17	-15.94	-0.04
60	SLU 76	-383	-17	6791	5.43	-17.38	-0.04
60	SLU 77	-277	-16	6493	4.75	-13.73	-0.04
60	SLU 78	-346	-17	6710	5.2	-16.14	-0.04
60	SLU 79	-273	-16	6462	4.72	-13.57	-0.04
60	SLU 80	-342	-17	6679	5.17	-15.97	-0.04
60	SLU 81	-268	-16	6665	4.84	-13.48	-0.04
60	SLU 82	-336	-17	6882	5.29	-15.89	-0.04
60	SLU 83	-272	-16	6698	4.87	-13.68	-0.04
60	SLU 84	-341	-17	6915	5.33	-16.09	-0.04
60	SLE RA 1	-192	-11	4319	3.15	-9.33	-0.03
60	SLE RA 2	-268	-12	4561	3.65	-12	-0.02
60	SLE RA 3	-198	-11	4362	3.19	-9.57	-0.03
60	SLE RA 4	-244	-11	4507	3.49	-11.17	-0.02
60	SLE RA 5	-272	-12	4583	3.67	-12.13	-0.02
60	SLE RA 6	-201	-11	4384	3.21	-9.7	-0.03
60	SLE RA 7	-247	-11	4529	3.52	-11.31	-0.02
60	SLE RA 8	-198	-11	4363	3.19	-9.59	-0.03
60	SLE RA 9	-244	-11	4508	3.49	-11.19	-0.02
60	SLE RA 10	-274	-13	4979	3.94	-12.49	-0.03
60	SLE RA 11	-203	-12	4781	3.49	-10.06	-0.03
60	SLE RA 12	-249	-12	4926	3.79	-11.66	-0.03
60	SLE RA 13	-277	-13	5001	3.97	-12.62	-0.03
60	SLE RA 14	-207	-12	4803	3.51	-10.19	-0.03
60	SLE RA 15	-252	-12	4948	3.81	-11.79	-0.03
60	SLE RA 16	-204	-12	4782	3.49	-10.08	-0.03
60	SLE RA 17	-250	-12	4927	3.79	-11.68	-0.03
60	SLE RA 18	-200	-12	4917	3.57	-10.02	-0.03
60	SLE RA 19	-246	-13	5062	3.87	-11.62	-0.03
60	SLE RA 20	-203	-12	4939	3.59	-10.15	-0.03
60	SLE RA 21	-249	-13	5084	3.89	-11.76	-0.03
60	SLE FR 1	-192	-11	4319	3.15	-9.33	-0.03
60	SLE FR 2	-207	-11	4367	3.25	-9.86	-0.03
60	SLE FR 3	-193	-11	4328	3.16	-9.38	-0.03
60	SLE FR 4	-210	-11	4547	3.37	-10.07	-0.03
60	SLE FR 5	-196	-11	4507	3.28	-9.59	-0.03
60	SLE FR 6	-196	-11	4618	3.36	-9.67	-0.03
60	SLE QP 1	-192	-11	4319	3.15	-9.33	-0.03
60	SLE QP 2	-194	-11	4498	3.27	-9.53	-0.03
60	SLD 1	378	-10	4265	3.07	12.12	0
60	SLD 2	378	-10	4265	3.07	12.12	0
60	SLD 3	567	-7	3769	1.65	18.4	-0.02
60	SLD 4	567	-7	3769	1.65	18.4	-0.02
60	SLD 5	-310	-16	5180	5.37	-12.57	0.01
60	SLD 6	-310	-16	5180	5.37	-12.57	0.01
60	SLD 7	321	-4	3528	0.63	8.37	-0.05
60	SLD 8	321	-4	3528	0.63	8.37	-0.05
60	SLD 9	-710	-17	5468	5.92	-27.44	0
60	SLD 10	-710	-17	5468	5.92	-27.44	0
60	SLD 11	-79	-6	3817	1.17	-6.5	-0.06
60	SLD 12	-79	-6	3817	1.17	-6.5	-0.06
60	SLD 13	-956	-15	5227	4.9	-37.47	-0.03
60	SLD 14	-956	-15	5227	4.9	-37.47	-0.03
60	SLD 15	-766	-12	4732	3.47	-31.19	-0.05
60	SLD 16	-766	-12	4732	3.47	-31.19	-0.05
60	SLV 1	1134	-9	3953	2.85	40.76	0.03
60	SLV 2	1134	-9	3953	2.85	40.76	0.03
60	SLV 3	1595	-1	2775	-0.59	56.09	-0.01
60	SLV 4	1595	-1	2775	-0.59	56.09	-0.01
60	SLV 5	-496	-23	6123	8.37	-17.69	0.05
60	SLV 6	-496	-23	6123	8.37	-17.69	0.05
60	SLV 7	1042	5	2193	-3.11	33.4	-0.09
60	SLV 8	1042	5	2193	-3.11	33.4	-0.09
60	SLV 9	-1431	-26	6803	9.65	-52.47	0.03
60	SLV 10	-1431	-26	6803	9.65	-52.47	0.03
60	SLV 11	107	1	2874	-1.82	-1.37	-0.11
60	SLV 12	107	1	2874	-1.82	-1.37	-0.11
60	SLV 13	-1984	-21	6222	7.14	-75.16	-0.04
60	SLV 14	-1984	-21	6222	7.14	-75.16	-0.04
60	SLV 15	-1523	-13	5043	3.7	-59.83	-0.08
60	SLV 16	-1523	-13	5043	3.7	-59.83	-0.08
61	SLU 1	-517	-382	7467	1.31	-5.31	2.37
61	SLU 2	-658	-448	8089	3.05	-9.36	2.8
61	SLU 3	-530	-387	7591	1.26	-5.61	2.4
61	SLU 4	-615	-427	7964	2.3	-8.04	2.66
61	SLU 5	-665	-452	8156	3.03	-9.53	2.82
61	SLU 6	-537	-391	7657	1.24	-5.78	2.42

Nodo	Cont.	Reazione a traslazione			Reazione a rotazione		
Ind.	N.br.	x	y	z	x	y	z
61	SLU 7	-622	-431	8031	2.28	-8.21	2.68
61	SLU 8	-532	-389	7600	1.27	-5.65	2.41
61	SLU 9	-616	-429	7973	2.31	-8.08	2.67
61	SLU 10	-721	-505	9236	3.37	-9.68	3.15
61	SLU 11	-593	-444	8738	1.58	-5.93	2.76
61	SLU 12	-677	-484	9111	2.62	-8.36	3.01
61	SLU 13	-728	-508	9303	3.35	-9.85	3.17
61	SLU 14	-600	-447	8804	1.56	-6.1	2.78
61	SLU 15	-685	-487	9178	2.6	-8.53	3.03
61	SLU 16	-594	-446	8747	1.59	-5.97	2.77
61	SLU 17	-679	-485	9120	2.63	-8.4	3.02
61	SLU 18	-607	-463	9106	1.77	-5.76	2.89
61	SLU 19	-691	-502	9479	2.81	-8.19	3.14
61	SLU 20	-614	-466	9172	1.75	-5.94	2.91
61	SLU 21	-698	-506	9546	2.79	-8.36	3.16
61	SLU 22	-581	-429	8454	1.52	-6.04	2.67
61	SLU 23	-722	-496	9076	3.26	-10.09	3.09
61	SLU 24	-594	-435	8578	1.47	-6.34	2.7
61	SLU 25	-679	-475	8951	2.51	-8.77	2.95
61	SLU 26	-729	-499	9143	3.24	-10.26	3.11
61	SLU 27	-601	-438	8644	1.45	-6.51	2.72
61	SLU 28	-686	-478	9018	2.49	-8.94	2.97
61	SLU 29	-596	-437	8587	1.48	-6.38	2.71
61	SLU 30	-680	-476	8960	2.53	-8.81	2.96
61	SLU 31	-785	-552	10224	3.58	-10.41	3.45
61	SLU 32	-657	-491	9725	1.79	-6.66	3.06
61	SLU 33	-741	-531	10099	2.83	-9.09	3.31
61	SLU 34	-792	-556	10290	3.56	-10.58	3.47
61	SLU 35	-664	-495	9792	1.77	-6.83	3.08
61	SLU 36	-749	-535	10165	2.81	-9.26	3.33
61	SLU 37	-658	-493	9734	1.8	-6.7	3.07
61	SLU 38	-743	-533	10108	2.85	-9.13	3.32
61	SLU 39	-671	-510	10093	1.98	-6.49	3.18
61	SLU 40	-755	-550	10466	3.02	-8.92	3.43
61	SLU 41	-678	-514	10159	1.96	-6.66	3.2
61	SLU 42	-762	-554	10533	3	-9.09	3.45
61	SLU 43	-650	-480	9368	1.63	-6.65	2.98
61	SLU 44	-791	-546	9991	3.37	-10.7	3.41
61	SLU 45	-663	-485	9492	1.57	-6.96	3.01
61	SLU 46	-748	-525	9866	2.62	-9.39	3.27
61	SLU 47	-799	-550	10057	3.35	-10.87	3.43
61	SLU 48	-670	-489	9559	1.55	-7.13	3.03
61	SLU 49	-755	-529	9932	2.6	-9.56	3.29
61	SLU 50	-665	-487	9501	1.59	-6.99	3.02
61	SLU 51	-749	-527	9875	2.63	-9.42	3.28
61	SLU 52	-854	-603	11138	3.69	-11.02	3.76
61	SLU 53	-726	-542	10639	1.9	-7.28	3.37
61	SLU 54	-811	-582	11013	2.94	-9.71	3.62
61	SLU 55	-861	-606	11204	3.67	-11.19	3.78
61	SLU 56	-733	-545	10706	1.88	-7.45	3.39
61	SLU 57	-818	-585	11079	2.92	-9.88	3.64
61	SLU 58	-727	-544	10648	1.91	-7.31	3.38
61	SLU 59	-812	-583	11022	2.95	-9.74	3.63
61	SLU 60	-740	-561	11007	2.09	-7.11	3.5
61	SLU 61	-824	-601	11381	3.13	-9.54	3.75
61	SLU 62	-747	-564	11074	2.07	-7.28	3.52
61	SLU 63	-832	-604	11447	3.11	-9.71	3.77
61	SLU 64	-714	-528	10355	1.84	-7.38	3.28
61	SLU 65	-855	-594	10978	3.58	-11.43	3.7
61	SLU 66	-727	-533	10479	1.79	-7.69	3.31
61	SLU 67	-812	-573	10853	2.83	-10.11	3.56
61	SLU 68	-863	-598	11044	3.56	-11.6	3.72
61	SLU 69	-735	-537	10546	1.77	-7.86	3.33
61	SLU 70	-819	-576	10919	2.81	-10.29	3.58
61	SLU 71	-729	-535	10488	1.8	-7.72	3.32
61	SLU 72	-813	-575	10862	2.85	-10.15	3.57
61	SLU 73	-918	-651	12125	3.9	-11.75	4.06
61	SLU 74	-790	-590	11627	2.11	-8	3.67
61	SLU 75	-875	-629	12000	3.15	-10.43	3.92
61	SLU 76	-925	-654	12192	3.88	-11.92	4.08
61	SLU 77	-797	-593	11693	2.09	-8.17	3.69
61	SLU 78	-882	-633	12067	3.13	-10.6	3.94
61	SLU 79	-791	-591	11636	2.12	-8.04	3.68
61	SLU 80	-876	-631	12009	3.17	-10.47	3.93
61	SLU 81	-804	-608	11994	2.3	-7.84	3.79
61	SLU 82	-888	-648	12368	3.34	-10.27	4.05
61	SLU 83	-811	-612	12061	2.28	-8.01	3.81
61	SLU 84	-896	-652	12434	3.32	-10.44	4.07
61	SLE RA 1	-535	-395	7749	1.37	-5.52	2.46
61	SLE RA 2	-629	-440	8164	2.53	-8.22	2.74
61	SLE RA 3	-544	-399	7831	1.33	-5.72	2.48
61	SLE RA 4	-600	-426	8080	2.03	-7.34	2.65
61	SLE RA 5	-634	-442	8208	2.52	-8.33	2.75
61	SLE RA 6	-549	-401	7876	1.32	-5.83	2.49
61	SLE RA 7	-605	-428	8125	2.02	-7.45	2.66
61	SLE RA 8	-545	-400	7837	1.34	-5.75	2.49
61	SLE RA 9	-601	-427	8086	2.04	-7.36	2.65
61	SLE RA 10	-671	-477	8929	2.74	-8.43	2.98
61	SLE RA 11	-586	-437	8596	1.55	-5.93	2.72
61	SLE RA 12	-642	-463	8845	2.24	-7.55	2.89

Nodo	Cont.	Reazione a traslazione			Reazione a rotazione		
Ind.	N.br.	x	y	z	x	y	z
61	SLE RA 13	-676	-480	8973	2.73	-8.54	2.99
61	SLE RA 14	-591	-439	8640	1.54	-6.05	2.73
61	SLE RA 15	-647	-466	8890	2.23	-7.67	2.9
61	SLE RA 16	-587	-438	8602	1.56	-5.96	2.72
61	SLE RA 17	-643	-464	8851	2.25	-7.58	2.89
61	SLE RA 18	-595	-449	8841	1.68	-5.82	2.8
61	SLE RA 19	-651	-476	9090	2.37	-7.44	2.97
61	SLE RA 20	-600	-452	8886	1.66	-5.93	2.81
61	SLE RA 21	-656	-478	9135	2.36	-7.55	2.98
61	SLE FR 1	-535	-395	7749	1.37	-5.52	2.46
61	SLE FR 2	-554	-404	7832	1.6	-6.06	2.52
61	SLE FR 3	-537	-396	7766	1.36	-5.56	2.46
61	SLE FR 4	-572	-420	8159	1.69	-6.15	2.62
61	SLE FR 5	-555	-413	8094	1.46	-5.65	2.57
61	SLE FR 6	-565	-422	8295	1.52	-5.67	2.63
61	SLE QP 1	-535	-395	7749	1.37	-5.52	2.46
61	SLE QP 2	-553	-412	8076	1.46	-5.61	2.56
61	SLD 1	-39	-460	7138	-4.45	15.8	1.45
61	SLD 2	-39	-460	7138	-4.45	15.8	1.45
61	SLD 3	109	-244	6053	3.51	20.98	2.94
61	SLD 4	109	-244	6053	3.51	20.98	2.94
61	SLD 5	-624	-753	9441	-12.4	-7.04	-0.03
61	SLD 6	-624	-753	9441	-12.4	-7.04	-0.03
61	SLD 7	-129	-34	5824	14.16	10.22	4.94
61	SLD 8	-129	-34	5824	14.16	10.22	4.94
61	SLD 9	-977	-789	10329	-11.24	-21.44	0.19
61	SLD 10	-977	-789	10329	-11.24	-21.44	0.19
61	SLD 11	-483	-70	6712	15.32	-4.18	5.16
61	SLD 12	-483	-70	6712	15.32	-4.18	5.16
61	SLD 13	-1216	-579	10100	-0.59	-32.2	2.18
61	SLD 14	-1216	-579	10100	-0.59	-32.2	2.18
61	SLD 15	-1068	-363	9015	7.38	-27.02	3.68
61	SLD 16	-1068	-363	9015	7.38	-27.02	3.68
61	SLV 1	640	-521	5891	-12.53	44.14	-0.1
61	SLV 2	640	-521	5891	-12.53	44.14	-0.1
61	SLV 3	1006	-12	3312	6.19	56.86	3.42
61	SLV 4	1006	-12	3312	6.19	56.86	3.42
61	SLV 5	-750	-1217	11332	-31.13	-9.98	-3.57
61	SLV 6	-750	-1217	11332	-31.13	-9.98	-3.57
61	SLV 7	470	480	2736	31.28	32.43	8.15
61	SLV 8	470	480	2736	31.28	32.43	8.15
61	SLV 9	-1576	-1303	13417	-28.36	-43.65	-3.03
61	SLV 10	-1576	-1303	13417	-28.36	-43.65	-3.03
61	SLV 11	-356	393	4821	34.06	-1.23	8.69
61	SLV 12	-356	393	4821	34.06	-1.23	8.69
61	SLV 13	-2112	-811	12841	-3.27	-68.08	1.7
61	SLV 14	-2112	-811	12841	-3.27	-68.08	1.7
61	SLV 15	-1746	-302	10262	15.45	-55.36	5.22
61	SLV 16	-1746	-302	10262	15.45	-55.36	5.22
62	SLU 1	-750	3	3672	0.01	-17.69	-0.11
62	SLU 2	-863	4	3998	-0.01	-20.66	-0.13
62	SLU 3	-766	3	3739	0	-18.08	-0.12
62	SLU 4	-833	4	3935	-0.01	-19.86	-0.13
62	SLU 5	-871	4	4034	-0.01	-20.87	-0.14
62	SLU 6	-774	3	3775	0	-18.29	-0.12
62	SLU 7	-842	4	3970	-0.01	-20.07	-0.13
62	SLU 8	-767	3	3743	0.01	-18.12	-0.12
62	SLU 9	-835	4	3939	0	-19.9	-0.13
62	SLU 10	-972	4	4566	0.03	-23.19	-0.15
62	SLU 11	-875	4	4308	0.04	-20.62	-0.13
62	SLU 12	-943	4	4503	0.03	-22.4	-0.14
62	SLU 13	-981	5	4602	0.02	-23.41	-0.15
62	SLU 14	-884	4	4343	0.04	-20.83	-0.13
62	SLU 15	-951	4	4539	0.02	-22.61	-0.14
62	SLU 16	-877	4	4312	0.04	-20.65	-0.13
62	SLU 17	-944	4	4507	0.03	-22.43	-0.14
62	SLU 18	-907	4	4484	0.06	-21.31	-0.13
62	SLU 19	-974	4	4679	0.05	-23.09	-0.14
62	SLU 20	-915	4	4520	0.06	-21.53	-0.13
62	SLU 21	-983	4	4715	0.05	-23.31	-0.15
62	SLU 22	-851	4	4172	0.04	-20.06	-0.13
62	SLU 23	-963	4	4498	0.02	-23.03	-0.14
62	SLU 24	-866	4	4239	0.03	-20.45	-0.13
62	SLU 25	-934	4	4434	0.02	-22.23	-0.14
62	SLU 26	-972	4	4533	0.02	-23.24	-0.15
62	SLU 27	-874	4	4275	0.03	-20.66	-0.13
62	SLU 28	-942	4	4470	0.02	-22.44	-0.14
62	SLU 29	-867	4	4243	0.04	-20.49	-0.13
62	SLU 30	-935	4	4439	0.03	-22.27	-0.14
62	SLU 31	-1072	5	5066	0.06	-25.56	-0.16
62	SLU 32	-975	4	4807	0.07	-22.99	-0.14
62	SLU 33	-1043	5	5003	0.06	-24.77	-0.15
62	SLU 34	-1081	5	5102	0.05	-25.78	-0.16
62	SLU 35	-984	4	4843	0.07	-23.2	-0.14
62	SLU 36	-1051	5	5038	0.06	-24.98	-0.15
62	SLU 37	-977	4	4811	0.07	-23.02	-0.14
62	SLU 38	-1044	5	5007	0.06	-24.8	-0.15
62	SLU 39	-1007	4	4984	0.09	-23.68	-0.14
62	SLU 40	-1074	5	5179	0.08	-25.46	-0.15
62	SLU 41	-1015	4	5019	0.09	-23.9	-0.14

Nodo	Cont.	Reazione a traslazione			Reazione a rotazione		
Ind.	N.br.	x	y	z	x	y	z
62	SLU 42	-1083	5	5215	0.08	-25.68	-0.16
62	SLU 43	-941	4	4602	0	-22.19	-0.15
62	SLU 44	-1054	5	4928	-0.02	-25.15	-0.16
62	SLU 45	-957	4	4669	-0.01	-22.58	-0.15
62	SLU 46	-1024	5	4865	-0.02	-24.36	-0.16
62	SLU 47	-1062	5	4964	-0.02	-25.37	-0.17
62	SLU 48	-965	4	4705	-0.01	-22.79	-0.15
62	SLU 49	-1033	5	4901	-0.02	-24.57	-0.16
62	SLU 50	-958	4	4674	0	-22.61	-0.15
62	SLU 51	-1026	5	4869	-0.01	-24.39	-0.16
62	SLU 52	-1163	5	5496	0.02	-27.69	-0.18
62	SLU 53	-1066	4	5238	0.03	-25.11	-0.16
62	SLU 54	-1134	5	5433	0.02	-26.89	-0.17
62	SLU 55	-1172	5	5532	0.02	-27.9	-0.18
62	SLU 56	-1074	5	5273	0.03	-25.32	-0.16
62	SLU 57	-1142	5	5469	0.02	-27.1	-0.17
62	SLU 58	-1067	4	5242	0.03	-25.15	-0.16
62	SLU 59	-1135	5	5437	0.02	-26.93	-0.17
62	SLU 60	-1097	5	5414	0.05	-25.81	-0.16
62	SLU 61	-1165	5	5610	0.04	-27.59	-0.17
62	SLU 62	-1106	5	5450	0.05	-26.02	-0.16
62	SLU 63	-1173	5	5645	0.04	-27.8	-0.18
62	SLU 64	-1041	4	5102	0.03	-24.56	-0.16
62	SLU 65	-1154	5	5428	0.01	-27.52	-0.18
62	SLU 66	-1057	4	5169	0.03	-24.95	-0.16
62	SLU 67	-1124	5	5365	0.01	-26.73	-0.17
62	SLU 68	-1162	5	5464	0.01	-27.74	-0.18
62	SLU 69	-1065	4	5205	0.02	-25.16	-0.16
62	SLU 70	-1133	5	5400	0.01	-26.94	-0.17
62	SLU 71	-1058	4	5173	0.03	-24.98	-0.16
62	SLU 72	-1126	5	5369	0.02	-26.76	-0.17
62	SLU 73	-1263	6	5996	0.05	-30.06	-0.19
62	SLU 74	-1166	5	5737	0.06	-27.48	-0.17
62	SLU 75	-1234	5	5933	0.05	-29.26	-0.18
62	SLU 76	-1272	6	6032	0.05	-30.27	-0.19
62	SLU 77	-1175	5	5773	0.06	-27.69	-0.17
62	SLU 78	-1242	5	5969	0.05	-29.47	-0.18
62	SLU 79	-1168	5	5742	0.06	-27.52	-0.17
62	SLU 80	-1235	5	5937	0.05	-29.3	-0.18
62	SLU 81	-1198	5	5914	0.08	-28.18	-0.17
62	SLU 82	-1265	5	6109	0.07	-29.96	-0.19
62	SLU 83	-1206	5	5949	0.08	-28.39	-0.18
62	SLU 84	-1274	5	6145	0.07	-30.17	-0.19
62	SLE RA 1	-779	3	3815	0.02	-18.37	-0.12
62	SLE RA 2	-854	4	4032	0.01	-20.35	-0.13
62	SLE RA 3	-789	3	3860	0.01	-18.63	-0.12
62	SLE RA 4	-834	4	3990	0.01	-19.81	-0.13
62	SLE RA 5	-860	4	4056	0	-20.49	-0.13
62	SLE RA 6	-795	3	3883	0.01	-18.77	-0.12
62	SLE RA 7	-840	4	4014	0.01	-19.96	-0.13
62	SLE RA 8	-790	3	3862	0.02	-18.65	-0.12
62	SLE RA 9	-835	4	3993	0.01	-19.84	-0.13
62	SLE RA 10	-927	4	4411	0.03	-22.04	-0.14
62	SLE RA 11	-862	4	4238	0.04	-20.32	-0.13
62	SLE RA 12	-907	4	4369	0.03	-21.51	-0.14
62	SLE RA 13	-933	4	4435	0.03	-22.18	-0.14
62	SLE RA 14	-868	4	4262	0.04	-20.46	-0.13
62	SLE RA 15	-913	4	4393	0.03	-21.65	-0.14
62	SLE RA 16	-863	4	4241	0.04	-20.34	-0.13
62	SLE RA 17	-908	4	4372	0.03	-21.53	-0.14
62	SLE RA 18	-883	4	4356	0.05	-20.78	-0.13
62	SLE RA 19	-928	4	4486	0.04	-21.97	-0.14
62	SLE RA 20	-889	4	4380	0.05	-20.93	-0.13
62	SLE RA 21	-934	4	4510	0.04	-22.11	-0.14
62	SLE FR 1	-779	3	3815	0.02	-18.37	-0.12
62	SLE FR 2	-794	3	3858	0.02	-18.77	-0.12
62	SLE FR 3	-781	3	3824	0.02	-18.43	-0.12
62	SLE FR 4	-825	4	4021	0.03	-19.49	-0.12
62	SLE FR 5	-812	3	3987	0.03	-19.15	-0.12
62	SLE FR 6	-831	3	4085	0.04	-19.58	-0.12
62	SLE QP 1	-779	3	3815	0.02	-18.37	-0.12
62	SLE QP 2	-810	3	3977	0.03	-19.09	-0.12
62	SLD 1	-426	2	2902	-1.38	-7.55	-0.31
62	SLD 2	-426	2	2902	-1.38	-7.55	-0.31
62	SLD 3	-293	-3	2411	-0.29	-4.18	-0.17
62	SLD 4	-293	-3	2411	-0.29	-4.18	-0.17
62	SLD 5	-897	9	4399	-2.04	-20.73	-0.39
62	SLD 6	-897	9	4399	-2.04	-20.73	-0.39
62	SLD 7	-453	-5	2763	1.58	-9.52	0.08
62	SLD 8	-453	-5	2763	1.58	-9.52	0.08
62	SLD 9	-1167	12	5191	-1.52	-28.67	-0.32
62	SLD 10	-1167	12	5191	-1.52	-28.67	-0.32
62	SLD 11	-724	-3	3556	2.1	-17.46	0.15
62	SLD 12	-724	-3	3556	2.1	-17.46	0.15
62	SLD 13	-1327	9	5543	0.35	-34.01	-0.08
62	SLD 14	-1327	9	5543	0.35	-34.01	-0.08
62	SLD 15	-1194	5	5052	1.44	-30.64	0.06
62	SLD 16	-1194	5	5052	1.44	-30.64	0.06
62	SLV 1	82	0	1474	-3.31	7.74	-0.56
62	SLV 2	82	0	1474	-3.31	7.74	-0.56

Nodo	Cont.	Reazione a traslazione			Reazione a rotazione		
Ind.	N.br.	x	y	z	x	y	z
62	SLV 3	405	-11	301	-0.7	15.95	-0.23
62	SLV 4	405	-11	301	-0.7	15.95	-0.23
62	SLV 5	-1032	18	5006	-4.94	-23.49	-0.76
62	SLV 6	-1032	18	5006	-4.94	-23.49	-0.76
62	SLV 7	44	-17	1094	3.78	3.86	0.36
62	SLV 8	44	-17	1094	3.78	3.86	0.36
62	SLV 9	-1664	24	6860	-3.72	-42.05	-0.6
62	SLV 10	-1664	24	6860	-3.72	-42.05	-0.6
62	SLV 11	-588	-11	2948	5	-14.7	0.52
62	SLV 12	-588	-11	2948	5	-14.7	0.52
62	SLV 13	-2025	18	7653	0.75	-54.14	-0.02
62	SLV 14	-2025	18	7653	0.75	-54.14	-0.02
62	SLV 15	-1703	7	6480	3.37	-45.93	0.32
62	SLV 16	-1703	7	6480	3.37	-45.93	0.32
63	SLU 1	17	11	806	-2.26	-5	0.42
63	SLU 2	5	11	762	-2.24	-5.22	0.42
63	SLU 3	18	11	823	-2.32	-5.08	0.43
63	SLU 4	11	11	797	-2.31	-5.22	0.43
63	SLU 5	7	11	777	-2.28	-5.25	0.43
63	SLU 6	20	11	838	-2.36	-5.11	0.44
63	SLU 7	13	11	811	-2.35	-5.24	0.44
63	SLU 8	21	11	835	-2.34	-5.05	0.44
63	SLU 9	14	11	809	-2.33	-5.19	0.44
63	SLU 10	2	13	842	-2.66	-5.28	0.5
63	SLU 11	15	13	903	-2.74	-5.14	0.51
63	SLU 12	8	13	877	-2.73	-5.27	0.51
63	SLU 13	4	13	857	-2.7	-5.31	0.51
63	SLU 14	17	13	918	-2.78	-5.17	0.52
63	SLU 15	10	13	891	-2.77	-5.3	0.52
63	SLU 16	17	13	915	-2.76	-5.11	0.52
63	SLU 17	10	13	889	-2.75	-5.25	0.52
63	SLU 18	12	14	921	-2.85	-5.09	0.53
63	SLU 19	5	14	894	-2.84	-5.22	0.53
63	SLU 20	14	14	935	-2.89	-5.11	0.54
63	SLU 21	7	14	909	-2.89	-5.24	0.54
63	SLU 22	-9	12	812	-2.56	-6.11	0.48
63	SLU 23	-20	12	768	-2.55	-6.33	0.48
63	SLU 24	-7	13	829	-2.62	-6.19	0.49
63	SLU 25	-14	13	803	-2.62	-6.33	0.49
63	SLU 26	-18	13	783	-2.59	-6.36	0.49
63	SLU 27	-6	13	844	-2.66	-6.22	0.5
63	SLU 28	-13	13	817	-2.66	-6.35	0.5
63	SLU 29	-5	13	841	-2.64	-6.16	0.49
63	SLU 30	-12	13	815	-2.63	-6.3	0.49
63	SLU 31	-24	15	848	-2.96	-6.39	0.56
63	SLU 32	-11	15	909	-3.04	-6.25	0.57
63	SLU 33	-18	15	883	-3.03	-6.39	0.57
63	SLU 34	-22	15	863	-3	-6.42	0.56
63	SLU 35	-9	15	924	-3.08	-6.28	0.58
63	SLU 36	-16	15	897	-3.07	-6.41	0.58
63	SLU 37	-8	15	921	-3.06	-6.22	0.57
63	SLU 38	-15	15	895	-3.05	-6.36	0.57
63	SLU 39	-14	15	927	-3.16	-6.2	0.59
63	SLU 40	-21	15	900	-3.15	-6.33	0.59
63	SLU 41	-12	15	941	-3.2	-6.22	0.6
63	SLU 42	-19	16	915	-3.19	-6.36	0.6
63	SLU 43	31	13	1046	-2.83	-6.12	0.53
63	SLU 44	20	14	1002	-2.82	-6.34	0.53
63	SLU 45	32	14	1063	-2.89	-6.2	0.54
63	SLU 46	25	14	1037	-2.88	-6.34	0.54
63	SLU 47	21	14	1017	-2.86	-6.37	0.54
63	SLU 48	34	14	1078	-2.93	-6.23	0.55
63	SLU 49	27	14	1051	-2.93	-6.36	0.55
63	SLU 50	35	14	1075	-2.91	-6.17	0.54
63	SLU 51	28	14	1049	-2.9	-6.31	0.54
63	SLU 52	16	16	1082	-3.23	-6.4	0.61
63	SLU 53	29	16	1143	-3.31	-6.26	0.62
63	SLU 54	22	16	1117	-3.3	-6.39	0.62
63	SLU 55	18	16	1097	-3.27	-6.43	0.62
63	SLU 56	31	16	1158	-3.35	-6.29	0.63
63	SLU 57	24	16	1131	-3.34	-6.42	0.63
63	SLU 58	31	16	1155	-3.33	-6.23	0.62
63	SLU 59	24	16	1129	-3.32	-6.37	0.62
63	SLU 60	26	16	1161	-3.43	-6.2	0.64
63	SLU 61	19	17	1134	-3.42	-6.34	0.64
63	SLU 62	28	17	1175	-3.47	-6.23	0.65
63	SLU 63	21	17	1149	-3.46	-6.36	0.65
63	SLU 64	5	15	1052	-3.13	-7.23	0.58
63	SLU 65	-6	15	1008	-3.12	-7.45	0.59
63	SLU 66	7	15	1069	-3.2	-7.31	0.6
63	SLU 67	0	15	1043	-3.19	-7.45	0.6
63	SLU 68	-4	15	1023	-3.16	-7.48	0.59
63	SLU 69	8	15	1084	-3.24	-7.34	0.6
63	SLU 70	1	16	1057	-3.23	-7.47	0.61
63	SLU 71	9	15	1081	-3.22	-7.28	0.6
63	SLU 72	2	16	1055	-3.21	-7.42	0.6
63	SLU 73	-10	17	1088	-3.54	-7.51	0.66
63	SLU 74	3	17	1149	-3.61	-7.37	0.68
63	SLU 75	-4	17	1123	-3.61	-7.5	0.68
63	SLU 76	-8	17	1103	-3.58	-7.54	0.67

Nodo	Cont.	Reazione a traslazione			Reazione a rotazione		
Ind.	N.br.	x	y	z	x	y	z
63	SLU 77	5	17	1164	-3.65	-7.4	0.68
63	SLU 78	-2	18	1137	-3.65	-7.53	0.68
63	SLU 79	6	17	1161	-3.63	-7.34	0.68
63	SLU 80	-1	18	1135	-3.62	-7.48	0.68
63	SLU 81	0	18	1167	-3.73	-7.32	0.7
63	SLU 82	-7	18	1140	-3.72	-7.45	0.7
63	SLU 83	2	18	1181	-3.77	-7.34	0.71
63	SLU 84	-5	18	1155	-3.76	-7.48	0.71
63	SLE RA 1	10	11	808	-2.34	-5.32	0.44
63	SLE RA 2	2	11	779	-2.33	-5.47	0.44
63	SLE RA 3	11	11	819	-2.39	-5.37	0.45
63	SLE RA 4	6	11	802	-2.38	-5.46	0.45
63	SLE RA 5	3	11	788	-2.36	-5.48	0.44
63	SLE RA 6	12	11	829	-2.41	-5.39	0.45
63	SLE RA 7	7	12	811	-2.41	-5.48	0.45
63	SLE RA 8	12	11	827	-2.4	-5.35	0.45
63	SLE RA 9	8	12	810	-2.39	-5.44	0.45
63	SLE RA 10	0	13	832	-2.61	-5.51	0.49
63	SLE RA 11	8	13	873	-2.66	-5.41	0.5
63	SLE RA 12	4	13	855	-2.66	-5.5	0.5
63	SLE RA 13	1	13	842	-2.64	-5.52	0.5
63	SLE RA 14	10	13	882	-2.69	-5.43	0.5
63	SLE RA 15	5	13	865	-2.69	-5.52	0.5
63	SLE RA 16	10	13	881	-2.68	-5.39	0.5
63	SLE RA 17	5	13	863	-2.67	-5.48	0.5
63	SLE RA 18	7	13	884	-2.74	-5.37	0.51
63	SLE RA 19	2	13	867	-2.74	-5.46	0.51
63	SLE RA 20	8	13	894	-2.77	-5.39	0.52
63	SLE RA 21	3	13	876	-2.76	-5.48	0.52
63	SLE FR 1	10	11	808	-2.34	-5.32	0.44
63	SLE FR 2	8	11	802	-2.34	-5.35	0.44
63	SLE FR 3	10	11	812	-2.35	-5.32	0.44
63	SLE FR 4	7	12	825	-2.46	-5.36	0.46
63	SLE FR 5	9	12	835	-2.47	-5.34	0.46
63	SLE FR 6	8	12	846	-2.54	-5.35	0.47
63	SLE QP 1	10	11	808	-2.34	-5.32	0.44
63	SLE QP 2	9	12	831	-2.46	-5.33	0.46
63	SLD 1	288	23	1746	-4.61	0.97	0.89
63	SLD 2	288	23	1746	-4.61	0.97	0.89
63	SLD 3	256	20	1619	-3.79	1.64	0.74
63	SLD 4	256	20	1619	-3.79	1.64	0.74
63	SLD 5	142	21	1298	-4.36	-4.47	0.83
63	SLD 6	142	21	1298	-4.36	-4.47	0.83
63	SLD 7	34	8	875	-1.61	-2.22	0.3
63	SLD 8	34	8	875	-1.61	-2.22	0.3
63	SLD 9	-16	15	787	-3.32	-8.45	0.62
63	SLD 10	-16	15	787	-3.32	-8.45	0.62
63	SLD 11	-124	3	364	-0.57	-6.2	0.09
63	SLD 12	-124	3	364	-0.57	-6.2	0.09
63	SLD 13	-238	4	43	-1.14	-12.31	0.18
63	SLD 14	-238	4	43	-1.14	-12.31	0.18
63	SLD 15	-270	0	-84	-0.31	-11.64	0.03
63	SLD 16	-270	0	-84	-0.31	-11.64	0.03
63	SLV 1	662	39	2972	-7.5	9.37	1.48
63	SLV 2	662	39	2972	-7.5	9.37	1.48
63	SLV 3	584	30	2668	-5.57	10.98	1.11
63	SLV 4	584	30	2668	-5.57	10.98	1.11
63	SLV 5	323	33	1935	-6.91	-3.37	1.33
63	SLV 6	323	33	1935	-6.91	-3.37	1.33
63	SLV 7	63	4	921	-0.46	2.01	0.09
63	SLV 8	63	4	921	-0.46	2.01	0.09
63	SLV 9	-46	20	741	-4.47	-12.68	0.83
63	SLV 10	-46	20	741	-4.47	-12.68	0.83
63	SLV 11	-305	-10	-273	1.99	-7.3	-0.41
63	SLV 12	-305	-10	-273	1.99	-7.3	-0.41
63	SLV 13	-566	-7	-1006	0.64	-21.65	-0.19
63	SLV 14	-566	-7	-1006	0.64	-21.65	-0.19
63	SLV 15	-644	-16	-1310	2.58	-20.04	-0.56
63	SLV 16	-644	-16	-1310	2.58	-20.04	-0.56
64	SLU 1	-486	10	2837	-2.73	-29.27	-0.2
64	SLU 2	-491	9	2777	-2.63	-29.6	-0.19
64	SLU 3	-494	10	2892	-2.81	-29.74	-0.2
64	SLU 4	-497	10	2856	-2.75	-29.93	-0.2
64	SLU 5	-495	10	2816	-2.68	-29.85	-0.19
64	SLU 6	-498	10	2931	-2.85	-29.98	-0.2
64	SLU 7	-501	10	2895	-2.79	-30.18	-0.2
64	SLU 8	-494	10	2914	-2.82	-29.76	-0.2
64	SLU 9	-497	10	2878	-2.76	-29.96	-0.2
64	SLU 10	-598	11	3166	-3.17	-37.07	-0.21
64	SLU 11	-601	12	3281	-3.34	-37.2	-0.22
64	SLU 12	-604	12	3245	-3.28	-37.4	-0.22
64	SLU 13	-602	12	3204	-3.21	-37.31	-0.22
64	SLU 14	-605	12	3319	-3.39	-37.45	-0.22
64	SLU 15	-608	12	3283	-3.33	-37.64	-0.22
64	SLU 16	-601	12	3303	-3.36	-37.23	-0.22
64	SLU 17	-604	12	3266	-3.3	-37.42	-0.22
64	SLU 18	-639	13	3392	-3.5	-39.94	-0.23
64	SLU 19	-642	12	3356	-3.44	-40.14	-0.22
64	SLU 20	-643	13	3431	-3.54	-40.18	-0.23
64	SLU 21	-646	13	3395	-3.49	-40.38	-0.23

Nodo	Cont.	Reazione a traslazione			Reazione a rotazione		
Ind.	N.br.	x	y	z	x	y	z
64	SLU 22	-574	11	3092	-3.14	-34.76	-0.21
64	SLU 23	-579	11	3032	-3.04	-35.09	-0.21
64	SLU 24	-582	12	3147	-3.22	-35.23	-0.21
64	SLU 25	-585	11	3111	-3.16	-35.42	-0.21
64	SLU 26	-583	11	3070	-3.09	-35.33	-0.21
64	SLU 27	-586	12	3185	-3.26	-35.47	-0.22
64	SLU 28	-589	12	3149	-3.2	-35.67	-0.21
64	SLU 29	-582	12	3169	-3.23	-35.25	-0.22
64	SLU 30	-585	11	3133	-3.17	-35.45	-0.21
64	SLU 31	-686	13	3421	-3.58	-42.56	-0.23
64	SLU 32	-689	14	3536	-3.75	-42.69	-0.24
64	SLU 33	-692	14	3500	-3.7	-42.89	-0.23
64	SLU 34	-690	13	3459	-3.63	-42.8	-0.23
64	SLU 35	-693	14	3574	-3.8	-42.94	-0.24
64	SLU 36	-696	14	3538	-3.74	-43.13	-0.24
64	SLU 37	-689	14	3557	-3.77	-42.72	-0.24
64	SLU 38	-692	14	3521	-3.71	-42.91	-0.23
64	SLU 39	-727	14	3647	-3.91	-45.43	-0.24
64	SLU 40	-730	14	3611	-3.85	-45.62	-0.24
64	SLU 41	-731	14	3686	-3.96	-45.67	-0.24
64	SLU 42	-734	14	3649	-3.9	-45.87	-0.24
64	SLU 43	-602	12	3601	-3.41	-36.18	-0.25
64	SLU 44	-607	12	3541	-3.31	-36.5	-0.25
64	SLU 45	-610	12	3656	-3.48	-36.64	-0.25
64	SLU 46	-612	12	3620	-3.42	-36.83	-0.25
64	SLU 47	-611	12	3579	-3.35	-36.75	-0.25
64	SLU 48	-614	12	3695	-3.53	-36.88	-0.26
64	SLU 49	-616	12	3658	-3.47	-37.08	-0.25
64	SLU 50	-610	12	3678	-3.5	-36.66	-0.26
64	SLU 51	-613	12	3642	-3.44	-36.86	-0.25
64	SLU 52	-714	14	3930	-3.85	-43.97	-0.27
64	SLU 53	-717	14	4045	-4.02	-44.1	-0.28
64	SLU 54	-720	14	4009	-3.96	-44.3	-0.27
64	SLU 55	-718	14	3968	-3.89	-44.21	-0.27
64	SLU 56	-721	14	4083	-4.07	-44.35	-0.28
64	SLU 57	-724	14	4047	-4.01	-44.54	-0.28
64	SLU 58	-717	14	4066	-4.04	-44.13	-0.28
64	SLU 59	-720	14	4030	-3.98	-44.33	-0.27
64	SLU 60	-755	15	4156	-4.18	-46.84	-0.28
64	SLU 61	-758	15	4120	-4.12	-47.04	-0.28
64	SLU 62	-759	15	4195	-4.22	-47.08	-0.28
64	SLU 63	-762	15	4159	-4.16	-47.28	-0.28
64	SLU 64	-690	14	3856	-3.82	-41.66	-0.26
64	SLU 65	-695	13	3796	-3.72	-41.99	-0.26
64	SLU 66	-697	14	3911	-3.89	-42.13	-0.27
64	SLU 67	-700	14	3875	-3.83	-42.32	-0.27
64	SLU 68	-699	14	3834	-3.77	-42.24	-0.26
64	SLU 69	-701	14	3949	-3.94	-42.37	-0.27
64	SLU 70	-704	14	3913	-3.88	-42.57	-0.27
64	SLU 71	-698	14	3933	-3.91	-42.15	-0.27
64	SLU 72	-701	14	3897	-3.85	-42.35	-0.27
64	SLU 73	-802	15	4184	-4.26	-49.46	-0.28
64	SLU 74	-805	16	4300	-4.43	-49.59	-0.29
64	SLU 75	-807	16	4263	-4.37	-49.79	-0.29
64	SLU 76	-806	16	4223	-4.3	-49.7	-0.28
64	SLU 77	-809	16	4338	-4.48	-49.84	-0.29
64	SLU 78	-811	16	4302	-4.42	-50.03	-0.29
64	SLU 79	-805	16	4321	-4.45	-49.62	-0.29
64	SLU 80	-808	16	4285	-4.39	-49.81	-0.29
64	SLU 81	-843	17	4411	-4.59	-52.33	-0.29
64	SLU 82	-846	16	4375	-4.53	-52.53	-0.29
64	SLU 83	-847	17	4449	-4.63	-52.57	-0.3
64	SLU 84	-850	17	4413	-4.57	-52.77	-0.29
64	SLE RA 1	-511	10	2910	-2.85	-30.84	-0.2
64	SLE RA 2	-515	10	2870	-2.78	-31.06	-0.2
64	SLE RA 3	-516	10	2947	-2.9	-31.15	-0.2
64	SLE RA 4	-518	10	2923	-2.86	-31.28	-0.2
64	SLE RA 5	-517	10	2896	-2.81	-31.22	-0.2
64	SLE RA 6	-519	10	2972	-2.93	-31.32	-0.21
64	SLE RA 7	-521	10	2948	-2.89	-31.45	-0.2
64	SLE RA 8	-517	10	2961	-2.91	-31.17	-0.2
64	SLE RA 9	-519	10	2937	-2.87	-31.3	-0.2
64	SLE RA 10	-586	11	3129	-3.14	-36.04	-0.21
64	SLE RA 11	-588	12	3206	-3.26	-36.13	-0.22
64	SLE RA 12	-590	12	3182	-3.22	-36.26	-0.22
64	SLE RA 13	-589	11	3155	-3.17	-36.2	-0.21
64	SLE RA 14	-590	12	3231	-3.29	-36.29	-0.22
64	SLE RA 15	-592	12	3207	-3.25	-36.42	-0.22
64	SLE RA 16	-588	12	3220	-3.27	-36.15	-0.22
64	SLE RA 17	-590	12	3196	-3.23	-36.28	-0.22
64	SLE RA 18	-613	12	3280	-3.36	-37.95	-0.22
64	SLE RA 19	-615	12	3256	-3.32	-38.08	-0.22
64	SLE RA 20	-616	12	3306	-3.39	-38.12	-0.22
64	SLE RA 21	-618	12	3282	-3.35	-38.25	-0.22
64	SLE FR 1	-511	10	2910	-2.85	-30.84	-0.2
64	SLE FR 2	-512	10	2902	-2.83	-30.89	-0.2
64	SLE FR 3	-512	10	2920	-2.86	-30.91	-0.2
64	SLE FR 4	-543	11	3013	-2.99	-33.02	-0.21
64	SLE FR 5	-543	11	3031	-3.01	-33.04	-0.21
64	SLE FR 6	-562	11	3095	-3.1	-34.4	-0.21

Nodo	Cont.	Reazione a traslazione			Reazione a rotazione		
Ind.	N.br.	x	y	z	x	y	z
64	SLE QP 1	-511	10	2910	-2.85	-30.84	-0.2
64	SLE QP 2	-542	11	3021	-3	-32.98	-0.21
64	SLD 1	-367	7	3774	-1.71	-20.28	-0.27
64	SLD 2	-367	7	3774	-1.71	-20.28	-0.27
64	SLD 3	-342	5	3533	-0.55	-18.73	-0.25
64	SLD 4	-342	5	3533	-0.55	-18.73	-0.25
64	SLD 5	-526	13	3613	-4.38	-31.52	-0.26
64	SLD 6	-526	13	3613	-4.38	-31.52	-0.26
64	SLD 7	-445	5	2809	-0.5	-26.35	-0.18
64	SLD 8	-445	5	2809	-0.5	-26.35	-0.18
64	SLD 9	-639	16	3233	-5.51	-39.6	-0.23
64	SLD 10	-639	16	3233	-5.51	-39.6	-0.23
64	SLD 11	-557	8	2430	-1.62	-34.44	-0.15
64	SLD 12	-557	8	2430	-1.62	-34.44	-0.15
64	SLD 13	-742	17	2509	-5.46	-47.22	-0.16
64	SLD 14	-742	17	2509	-5.46	-47.22	-0.16
64	SLD 15	-717	14	2268	-4.29	-45.67	-0.14
64	SLD 16	-717	14	2268	-4.29	-45.67	-0.14
64	SLV 1	-133	3	4784	0.02	-3.34	-0.36
64	SLV 2	-133	3	4784	0.02	-3.34	-0.36
64	SLV 3	-75	-3	4214	2.74	0.31	-0.3
64	SLV 4	-75	-3	4214	2.74	0.31	-0.3
64	SLV 5	-507	17	4415	-6.23	-29.63	-0.34
64	SLV 6	-507	17	4415	-6.23	-29.63	-0.34
64	SLV 7	-315	-2	2514	2.86	-17.45	-0.15
64	SLV 8	-315	-2	2514	2.86	-17.45	-0.15
64	SLV 9	-769	23	3529	-8.86	-48.5	-0.26
64	SLV 10	-769	23	3529	-8.86	-48.5	-0.26
64	SLV 11	-577	5	1627	0.23	-36.33	-0.08
64	SLV 12	-577	5	1627	0.23	-36.33	-0.08
64	SLV 13	-1009	24	1829	-8.75	-66.26	-0.11
64	SLV 14	-1009	24	1829	-8.75	-66.26	-0.11
64	SLV 15	-951	19	1258	-6.02	-62.61	-0.05
64	SLV 16	-951	19	1258	-6.02	-62.61	-0.05
65	SLU 1	-768	388	8555	-18.75	-20.98	-0.59
65	SLU 2	-766	292	8479	-14.94	-21.09	-0.57
65	SLU 3	-782	397	8718	-19.2	-21.35	-0.6
65	SLU 4	-781	340	8672	-16.92	-21.42	-0.58
65	SLU 5	-775	297	8582	-15.2	-21.3	-0.57
65	SLU 6	-790	403	8822	-19.46	-21.56	-0.6
65	SLU 7	-789	345	8776	-17.18	-21.63	-0.59
65	SLU 8	-785	398	8762	-19.27	-21.4	-0.6
65	SLU 9	-784	341	8716	-16.98	-21.46	-0.58
65	SLU 10	-884	351	9766	-17.83	-24.09	-0.64
65	SLU 11	-900	456	10005	-22.08	-24.35	-0.67
65	SLU 12	-899	398	9960	-19.8	-24.42	-0.66
65	SLU 13	-893	356	9870	-18.08	-24.3	-0.65
65	SLU 14	-908	461	10109	-22.34	-24.56	-0.67
65	SLU 15	-907	404	10063	-20.06	-24.62	-0.66
65	SLU 16	-903	457	10049	-22.15	-24.39	-0.67
65	SLU 17	-902	399	10004	-19.86	-24.46	-0.66
65	SLU 18	-937	472	10394	-22.87	-25.26	-0.7
65	SLU 19	-936	414	10348	-20.58	-25.33	-0.68
65	SLU 20	-945	477	10498	-23.12	-25.47	-0.7
65	SLU 21	-944	419	10452	-20.84	-25.54	-0.69
65	SLU 22	-874	433	9587	-20.97	-24.21	-0.67
65	SLU 23	-872	337	9511	-17.16	-24.33	-0.65
65	SLU 24	-888	442	9750	-21.42	-24.58	-0.68
65	SLU 25	-887	384	9704	-19.14	-24.65	-0.67
65	SLU 26	-880	342	9614	-17.42	-24.53	-0.65
65	SLU 27	-896	447	9853	-21.68	-24.79	-0.68
65	SLU 28	-895	390	9808	-19.39	-24.86	-0.67
65	SLU 29	-891	443	9794	-21.48	-24.63	-0.68
65	SLU 30	-890	385	9748	-19.2	-24.7	-0.67
65	SLU 31	-990	395	10798	-20.04	-27.32	-0.72
65	SLU 32	-1006	501	11037	-24.3	-27.58	-0.75
65	SLU 33	-1005	443	10992	-22.02	-27.65	-0.74
65	SLU 34	-998	400	10902	-20.3	-27.53	-0.73
65	SLU 35	-1014	506	11141	-24.56	-27.79	-0.76
65	SLU 36	-1013	448	11095	-22.27	-27.86	-0.74
65	SLU 37	-1009	502	11081	-24.36	-27.63	-0.75
65	SLU 38	-1007	444	11036	-22.08	-27.69	-0.74
65	SLU 39	-1042	517	11426	-25.08	-28.49	-0.78
65	SLU 40	-1041	459	11380	-22.8	-28.56	-0.76
65	SLU 41	-1051	522	11529	-25.34	-28.7	-0.78
65	SLU 42	-1050	464	11484	-23.06	-28.77	-0.77
65	SLU 43	-962	489	10768	-23.62	-26.16	-0.74
65	SLU 44	-961	393	10692	-19.81	-26.28	-0.72
65	SLU 45	-976	499	10931	-24.07	-26.53	-0.74
65	SLU 46	-975	441	10885	-21.78	-26.6	-0.73
65	SLU 47	-969	398	10795	-20.07	-26.49	-0.72
65	SLU 48	-985	504	11034	-24.33	-26.74	-0.75
65	SLU 49	-983	446	10989	-22.04	-26.81	-0.74
65	SLU 50	-979	500	10975	-24.13	-26.58	-0.74
65	SLU 51	-978	442	10929	-21.85	-26.65	-0.73
65	SLU 52	-1078	452	11979	-22.69	-29.27	-0.79
65	SLU 53	-1094	557	12218	-26.95	-29.53	-0.82
65	SLU 54	-1093	500	12173	-24.67	-29.6	-0.81
65	SLU 55	-1087	457	12083	-22.95	-29.48	-0.79
65	SLU 56	-1103	562	12322	-27.21	-29.74	-0.82

Nodo	Cont.	Reazione a traslazione			Reazione a rotazione		
Ind.	N.br.	x	y	z	x	y	z
65	SLU 57	-1101	505	12276	-24.92	-29.81	-0.81
65	SLU 58	-1097	558	12262	-27.01	-29.58	-0.82
65	SLU 59	-1096	501	12216	-24.73	-29.65	-0.81
65	SLU 60	-1131	573	12607	-27.73	-30.44	-0.84
65	SLU 61	-1130	515	12561	-25.45	-30.51	-0.83
65	SLU 62	-1139	578	12710	-27.99	-30.65	-0.85
65	SLU 63	-1138	521	12665	-25.71	-30.72	-0.84
65	SLU 64	-1068	534	11800	-25.83	-29.4	-0.82
65	SLU 65	-1066	438	11724	-22.03	-29.51	-0.8
65	SLU 66	-1082	543	11963	-26.29	-29.77	-0.83
65	SLU 67	-1081	486	11917	-24	-29.84	-0.81
65	SLU 68	-1075	443	11827	-22.28	-29.72	-0.8
65	SLU 69	-1090	548	12066	-26.54	-29.98	-0.83
65	SLU 70	-1089	491	12020	-24.26	-30.05	-0.82
65	SLU 71	-1085	544	12007	-26.35	-29.81	-0.83
65	SLU 72	-1084	487	11961	-24.06	-29.88	-0.81
65	SLU 73	-1184	496	13011	-24.91	-32.51	-0.87
65	SLU 74	-1200	602	13250	-29.17	-32.77	-0.9
65	SLU 75	-1199	544	13204	-26.88	-32.83	-0.89
65	SLU 76	-1193	502	13114	-25.16	-32.72	-0.88
65	SLU 77	-1208	607	13353	-29.42	-32.97	-0.9
65	SLU 78	-1207	549	13308	-27.14	-33.04	-0.89
65	SLU 79	-1203	603	13294	-29.23	-32.81	-0.9
65	SLU 80	-1202	545	13248	-26.94	-32.88	-0.89
65	SLU 81	-1237	618	13639	-29.95	-33.68	-0.93
65	SLU 82	-1236	560	13593	-27.66	-33.75	-0.91
65	SLU 83	-1245	623	13742	-30.21	-33.89	-0.93
65	SLU 84	-1244	565	13697	-27.92	-33.95	-0.92
65	SLE RA 1	-798	401	8850	-19.39	-21.9	-0.61
65	SLE RA 2	-797	337	8799	-16.85	-21.98	-0.6
65	SLE RA 3	-808	407	8959	-19.69	-22.15	-0.62
65	SLE RA 4	-807	369	8928	-18.16	-22.2	-0.61
65	SLE RA 5	-803	340	8868	-17.02	-22.12	-0.6
65	SLE RA 6	-813	411	9028	-19.86	-22.29	-0.62
65	SLE RA 7	-812	372	8997	-18.33	-22.33	-0.61
65	SLE RA 8	-810	408	8988	-19.73	-22.18	-0.62
65	SLE RA 9	-809	369	8957	-18.2	-22.23	-0.61
65	SLE RA 10	-876	376	9657	-18.77	-23.98	-0.65
65	SLE RA 11	-886	446	9817	-21.61	-24.15	-0.67
65	SLE RA 12	-886	408	9786	-20.08	-24.19	-0.66
65	SLE RA 13	-881	379	9726	-18.94	-24.12	-0.65
65	SLE RA 14	-892	450	9886	-21.78	-24.29	-0.67
65	SLE RA 15	-891	411	9855	-20.26	-24.33	-0.66
65	SLE RA 16	-888	447	9846	-21.65	-24.18	-0.67
65	SLE RA 17	-887	408	9816	-20.13	-24.22	-0.66
65	SLE RA 18	-911	457	10076	-22.13	-24.76	-0.68
65	SLE RA 19	-910	418	10046	-20.61	-24.8	-0.67
65	SLE RA 20	-916	460	10145	-22.3	-24.9	-0.69
65	SLE RA 21	-916	422	10114	-20.78	-24.94	-0.68
65	SLE FR 1	-798	401	8850	-19.39	-21.9	-0.61
65	SLE FR 2	-798	388	8840	-18.88	-21.92	-0.61
65	SLE FR 3	-801	402	8878	-19.45	-21.96	-0.61
65	SLE FR 4	-832	405	9208	-19.7	-22.77	-0.63
65	SLE FR 5	-834	419	9245	-20.28	-22.81	-0.63
65	SLE FR 6	-855	429	9463	-20.76	-23.33	-0.65
65	SLE QP 1	-798	401	8850	-19.39	-21.9	-0.61
65	SLE QP 2	-832	418	9218	-20.21	-22.76	-0.63
65	SLD 1	-696	469	8600	-22.26	-15.24	-0.33
65	SLD 2	-696	469	8600	-22.26	-15.24	-0.33
65	SLD 3	-653	32	7997	-4.73	-14.08	-0.24
65	SLD 4	-653	32	7997	-4.73	-14.08	-0.24
65	SLD 5	-857	1097	9947	-47.4	-22.27	-0.68
65	SLD 6	-857	1097	9947	-47.4	-22.27	-0.68
65	SLD 7	-713	-362	7937	11.01	-18.39	-0.38
65	SLD 8	-713	-362	7937	11.01	-18.39	-0.38
65	SLD 9	-951	1197	10498	-51.43	-27.13	-0.89
65	SLD 10	-951	1197	10498	-51.43	-27.13	-0.89
65	SLD 11	-808	-262	8489	6.99	-23.24	-0.59
65	SLD 12	-808	-262	8489	6.99	-23.24	-0.59
65	SLD 13	-1011	803	10438	-35.68	-31.44	-1.03
65	SLD 14	-1011	803	10438	-35.68	-31.44	-1.03
65	SLD 15	-968	366	9836	-18.16	-30.27	-0.94
65	SLD 16	-968	366	9836	-18.16	-30.27	-0.94
65	SLV 1	-515	539	7778	-25.01	-5.22	0.09
65	SLV 2	-515	539	7778	-25.01	-5.22	0.09
65	SLV 3	-415	-489	6364	16.16	-2.48	0.3
65	SLV 4	-415	-489	6364	16.16	-2.48	0.3
65	SLV 5	-890	2014	10931	-84.09	-21.64	-0.75
65	SLV 6	-890	2014	10931	-84.09	-21.64	-0.75
65	SLV 7	-554	-1414	6216	53.14	-12.53	-0.02
65	SLV 8	-554	-1414	6216	53.14	-12.53	-0.02
65	SLV 9	-1110	2249	12219	-93.56	-32.99	-1.24
65	SLV 10	-1110	2249	12219	-93.56	-32.99	-1.24
65	SLV 11	-775	-1178	7504	43.67	-23.87	-0.52
65	SLV 12	-775	-1178	7504	43.67	-23.87	-0.52
65	SLV 13	-1250	1324	12072	-56.58	-43.03	-1.57
65	SLV 14	-1250	1324	12072	-56.58	-43.03	-1.57
65	SLV 15	-1149	296	10657	-15.41	-40.3	-1.35
65	SLV 16	-1149	296	10657	-15.41	-40.3	-1.35
66	SLU 1	268	697	7893	-33.09	-578	10.71

Nodo	Cont.	Reazione a traslazione			Reazione a rotazione		
Ind.	N.br.	x	y	z	x	y	z
66	SLU 2	265	610	7815	-29.8	-577.9	10.9
66	SLU 3	270	718	8017	-34.01	-581.93	10.95
66	SLU 4	268	666	7970	-32.04	-581.87	11.06
66	SLU 5	266	623	7886	-30.39	-578.27	11.03
66	SLU 6	272	730	8088	-34.6	-582.31	11.09
66	SLU 7	270	678	8042	-32.63	-582.25	11.2
66	SLU 8	271	722	8036	-34.27	-578.75	10.98
66	SLU 9	269	670	7989	-32.29	-578.69	11.09
66	SLU 10	305	719	8963	-34.51	-683.31	12.5
66	SLU 11	310	826	9165	-38.72	-687.34	12.56
66	SLU 12	308	774	9118	-36.75	-687.28	12.67
66	SLU 13	306	731	9035	-35.1	-683.69	12.64
66	SLU 14	311	838	9236	-39.31	-687.72	12.69
66	SLU 15	309	786	9190	-37.34	-687.66	12.8
66	SLU 16	310	830	9184	-38.97	-684.16	12.59
66	SLU 17	308	778	9137	-37	-684.1	12.7
66	SLU 18	325	852	9533	-39.81	-728.59	13
66	SLU 19	323	800	9486	-37.84	-728.53	13.11
66	SLU 20	326	864	9604	-40.4	-728.96	13.14
66	SLU 21	324	812	9558	-38.43	-728.9	13.25
66	SLU 22	302	785	8788	-36.84	-659.26	12.1
66	SLU 23	298	698	8710	-33.55	-659.16	12.28
66	SLU 24	304	805	8912	-37.76	-663.2	12.34
66	SLU 25	302	753	8865	-35.79	-663.14	12.45
66	SLU 26	300	711	8781	-34.14	-659.54	12.41
66	SLU 27	305	818	8983	-38.35	-663.57	12.47
66	SLU 28	303	766	8936	-36.38	-663.51	12.58
66	SLU 29	304	810	8930	-38.01	-660.01	12.37
66	SLU 30	302	758	8884	-36.04	-659.95	12.48
66	SLU 31	338	806	9858	-38.26	-764.58	13.88
66	SLU 32	343	914	10060	-42.47	-768.61	13.94
66	SLU 33	342	862	10013	-40.5	-768.55	14.05
66	SLU 34	339	819	9929	-38.84	-764.95	14.02
66	SLU 35	345	926	10131	-43.06	-768.98	14.08
66	SLU 36	343	874	10085	-41.08	-768.92	14.19
66	SLU 37	344	918	10079	-42.72	-765.43	13.97
66	SLU 38	342	866	10032	-40.75	-765.37	14.08
66	SLU 39	358	939	10428	-43.56	-809.85	14.39
66	SLU 40	356	888	10381	-41.59	-809.79	14.5
66	SLU 41	360	952	10499	-44.15	-810.23	14.52
66	SLU 42	358	900	10453	-42.18	-810.17	14.63
66	SLU 43	337	876	9954	-41.73	-723.54	13.45
66	SLU 44	334	789	9876	-38.44	-723.44	13.63
66	SLU 45	339	897	10078	-42.66	-727.47	13.69
66	SLU 46	337	845	10031	-40.68	-727.41	13.8
66	SLU 47	335	802	9947	-39.03	-723.81	13.77
66	SLU 48	341	909	10149	-43.24	-727.84	13.83
66	SLU 49	339	857	10103	-41.27	-727.78	13.94
66	SLU 50	340	901	10097	-42.91	-724.29	13.72
66	SLU 51	338	849	10050	-40.93	-724.23	13.83
66	SLU 52	374	898	11024	-43.15	-828.85	15.24
66	SLU 53	379	1005	11226	-47.36	-832.88	15.3
66	SLU 54	377	953	11179	-45.39	-832.82	15.41
66	SLU 55	375	910	11096	-43.74	-829.22	15.37
66	SLU 56	380	1017	11297	-47.95	-833.26	15.43
66	SLU 57	378	965	11251	-45.98	-833.2	15.54
66	SLU 58	379	1009	11245	-47.61	-829.7	15.32
66	SLU 59	377	957	11198	-45.64	-829.64	15.44
66	SLU 60	394	1031	11594	-48.46	-874.13	15.74
66	SLU 61	392	979	11548	-46.48	-874.07	15.85
66	SLU 62	395	1043	11666	-49.04	-874.5	15.88
66	SLU 63	393	991	11619	-47.07	-874.44	15.99
66	SLU 64	371	964	10849	-45.48	-804.8	14.83
66	SLU 65	367	877	10771	-42.19	-804.7	15.02
66	SLU 66	373	984	10973	-46.4	-808.73	15.08
66	SLU 67	371	932	10926	-44.43	-808.67	15.19
66	SLU 68	369	890	10842	-42.78	-805.08	15.15
66	SLU 69	374	997	11044	-46.99	-809.11	15.21
66	SLU 70	372	945	10998	-45.02	-809.05	15.32
66	SLU 71	373	989	10991	-46.66	-805.55	15.1
66	SLU 72	371	937	10945	-44.68	-805.49	15.22
66	SLU 73	407	985	11919	-46.9	-910.11	16.62
66	SLU 74	412	1093	12121	-51.11	-914.15	16.68
66	SLU 75	410	1041	12074	-49.14	-914.09	16.79
66	SLU 76	408	998	11991	-47.49	-910.49	16.76
66	SLU 77	414	1105	12192	-51.7	-914.52	16.81
66	SLU 78	412	1053	12146	-49.73	-914.46	16.93
66	SLU 79	413	1097	12140	-51.36	-910.96	16.71
66	SLU 80	411	1045	12093	-49.39	-910.9	16.82
66	SLU 81	427	1118	12489	-52.2	-955.39	17.13
66	SLU 82	425	1067	12442	-50.23	-955.33	17.24
66	SLU 83	429	1131	12560	-52.79	-955.77	17.26
66	SLU 84	427	1079	12514	-50.82	-955.71	17.37
66	SLE RA 1	278	722	8149	-34.16	-601.22	11.11
66	SLE RA 2	276	664	8097	-31.97	-601.15	11.23
66	SLE RA 3	279	736	8231	-34.78	-603.84	11.27
66	SLE RA 4	278	701	8200	-33.46	-603.8	11.34
66	SLE RA 5	276	673	8144	-32.36	-601.4	11.32
66	SLE RA 6	280	744	8279	-35.17	-604.09	11.36
66	SLE RA 7	279	709	8248	-33.85	-604.05	11.43

Nodo	Cont.	Reazione a traslazione			Reazione a rotazione		
Ind.	N.br.	x	y	z	x	y	z
66	SLE RA 8	279	739	8244	-34.94	-601.72	11.29
66	SLE RA 9	278	704	8213	-33.63	-601.68	11.36
66	SLE RA 10	302	737	8862	-35.11	-671.43	12.3
66	SLE RA 11	306	808	8997	-37.91	-674.11	12.34
66	SLE RA 12	304	773	8966	-36.6	-674.07	12.41
66	SLE RA 13	303	745	8910	-35.5	-671.68	12.39
66	SLE RA 14	306	816	9044	-38.31	-674.36	12.43
66	SLE RA 15	305	782	9013	-36.99	-674.32	12.5
66	SLE RA 16	306	811	9009	-38.08	-671.99	12.36
66	SLE RA 17	305	776	8978	-36.77	-671.95	12.43
66	SLE RA 18	316	825	9242	-38.64	-701.61	12.63
66	SLE RA 19	314	791	9211	-37.33	-701.57	12.71
66	SLE RA 20	316	834	9290	-39.04	-701.86	12.72
66	SLE RA 21	315	799	9258	-37.72	-701.82	12.8
66	SLE FR 1	278	722	8149	-34.16	-601.22	11.11
66	SLE FR 2	277	710	8138	-33.72	-601.2	11.13
66	SLE FR 3	278	725	8168	-34.32	-601.32	11.14
66	SLE FR 4	289	741	8466	-35.07	-631.32	11.59
66	SLE FR 5	289	756	8496	-35.66	-631.44	11.6
66	SLE FR 6	297	774	8695	-36.4	-651.41	11.87
66	SLE QP 1	278	722	8149	-34.16	-601.22	11.11
66	SLE QP 2	289	753	8477	-35.51	-631.34	11.56
66	SLD 1	319	1107	9519	-36.75	-793.16	16.01
66	SLD 2	319	1107	9519	-36.75	-793.16	16.01
66	SLD 3	308	720	9017	-18.72	-761.72	12.02
66	SLD 4	308	720	9017	-18.72	-761.72	12.02
66	SLD 5	315	1446	9551	-63.24	-727.58	18.95
66	SLD 6	315	1446	9551	-63.24	-727.58	18.95
66	SLD 7	278	156	7877	-3.11	-622.76	5.65
66	SLD 8	278	156	7877	-3.11	-622.76	5.65
66	SLD 9	300	1350	9076	-67.9	-639.92	17.48
66	SLD 10	300	1350	9076	-67.9	-639.92	17.48
66	SLD 11	263	60	7403	-7.77	-535.09	4.18
66	SLD 12	263	60	7403	-7.77	-535.09	4.18
66	SLD 13	270	786	7937	-52.3	-500.96	11.11
66	SLD 14	270	786	7937	-52.3	-500.96	11.11
66	SLD 15	259	399	7435	-34.26	-469.51	7.12
66	SLD 16	259	399	7435	-34.26	-469.51	7.12
66	SLV 1	361	1583	10917	-38.43	-1009.91	22.01
66	SLV 2	361	1583	10917	-38.43	-1009.91	22.01
66	SLV 3	333	674	9737	3.85	-936.19	12.62
66	SLV 4	333	674	9737	3.85	-936.19	12.62
66	SLV 5	352	2380	10998	-100.51	-856.72	28.95
66	SLV 6	352	2380	10998	-100.51	-856.72	28.95
66	SLV 7	261	-649	7066	40.43	-610.98	-2.37
66	SLV 8	261	-649	7066	40.43	-610.98	-2.37
66	SLV 9	317	2155	9888	-111.44	-651.69	25.5
66	SLV 10	317	2155	9888	-111.44	-651.69	25.5
66	SLV 11	226	-874	5955	29.5	-405.95	-5.82
66	SLV 12	226	-874	5955	29.5	-405.95	-5.82
66	SLV 13	245	831	7216	-74.86	-326.48	10.51
66	SLV 14	245	831	7216	-74.86	-326.48	10.51
66	SLV 15	218	-77	6036	-32.58	-252.76	1.12
66	SLV 16	218	-77	6036	-32.58	-252.76	1.12
68	SLU 1	-61	-6	1571	-10.74	4.61	-1.48
68	SLU 2	-55	-7	1556	-10.55	4.75	-1.44
68	SLU 3	-61	-5	1582	-11.12	4.64	-1.53
68	SLU 4	-58	-6	1573	-11.01	4.73	-1.51
68	SLU 5	-56	-6	1561	-10.84	4.72	-1.48
68	SLU 6	-63	-5	1587	-11.41	4.61	-1.58
68	SLU 7	-59	-6	1578	-11.3	4.7	-1.56
68	SLU 8	-64	-5	1581	-11.32	4.54	-1.57
68	SLU 9	-60	-6	1572	-11.21	4.63	-1.54
68	SLU 10	-52	-8	1809	-11.9	5.77	-1.61
68	SLU 11	-59	-7	1835	-12.47	5.66	-1.71
68	SLU 12	-55	-8	1826	-12.36	5.75	-1.69
68	SLU 13	-54	-8	1814	-12.2	5.74	-1.66
68	SLU 14	-60	-7	1840	-12.76	5.62	-1.76
68	SLU 15	-57	-7	1831	-12.65	5.71	-1.73
68	SLU 16	-61	-7	1834	-12.67	5.56	-1.74
68	SLU 17	-58	-7	1825	-12.56	5.65	-1.72
68	SLU 18	-57	-8	1932	-12.67	6.06	-1.73
68	SLU 19	-54	-9	1924	-12.56	6.15	-1.7
68	SLU 20	-59	-8	1937	-12.96	6.02	-1.77
68	SLU 21	-55	-8	1929	-12.85	6.11	-1.75
68	SLU 22	-61	-7	1773	-11.83	5.43	-1.62
68	SLU 23	-55	-8	1758	-11.65	5.58	-1.58
68	SLU 24	-62	-7	1784	-12.22	5.47	-1.67
68	SLU 25	-58	-8	1775	-12.11	5.55	-1.65
68	SLU 26	-57	-8	1763	-11.94	5.55	-1.62
68	SLU 27	-64	-7	1789	-12.51	5.43	-1.72
68	SLU 28	-60	-7	1780	-12.4	5.52	-1.7
68	SLU 29	-65	-6	1783	-12.42	5.37	-1.71
68	SLU 30	-61	-7	1774	-12.31	5.45	-1.68
68	SLU 31	-53	-10	2011	-13	6.59	-1.75
68	SLU 32	-60	-9	2037	-13.57	6.48	-1.85
68	SLU 33	-56	-9	2028	-13.46	6.57	-1.83
68	SLU 34	-55	-10	2016	-13.29	6.56	-1.8
68	SLU 35	-61	-8	2042	-13.86	6.45	-1.9
68	SLU 36	-58	-9	2033	-13.75	6.54	-1.87

Nodo	Cont.	Reazione a traslazione			Reazione a rotazione		
Ind.	N.br.	x	y	z	x	y	z
68	SLU 37	-62	-8	2036	-13.77	6.38	-1.88
68	SLU 38	-59	-9	2027	-13.66	6.47	-1.86
68	SLU 39	-58	-9	2134	-13.77	6.88	-1.87
68	SLU 40	-54	-10	2125	-13.66	6.97	-1.84
68	SLU 41	-60	-9	2139	-14.06	6.85	-1.91
68	SLU 42	-56	-10	2130	-13.95	6.94	-1.89
68	SLU 43	-79	-7	1973	-13.58	5.71	-1.87
68	SLU 44	-73	-8	1958	-13.39	5.85	-1.83
68	SLU 45	-79	-7	1984	-13.96	5.74	-1.93
68	SLU 46	-75	-7	1975	-13.85	5.83	-1.91
68	SLU 47	-74	-8	1963	-13.69	5.82	-1.88
68	SLU 48	-81	-6	1989	-14.25	5.71	-1.98
68	SLU 49	-77	-7	1980	-14.14	5.8	-1.95
68	SLU 50	-82	-6	1983	-14.16	5.64	-1.96
68	SLU 51	-78	-7	1974	-14.05	5.73	-1.94
68	SLU 52	-70	-10	2211	-14.75	6.87	-2.01
68	SLU 53	-77	-8	2237	-15.32	6.76	-2.11
68	SLU 54	-73	-9	2228	-15.21	6.84	-2.08
68	SLU 55	-72	-9	2217	-15.04	6.84	-2.05
68	SLU 56	-78	-8	2242	-15.61	6.72	-2.15
68	SLU 57	-75	-8	2234	-15.5	6.81	-2.13
68	SLU 58	-79	-8	2236	-15.52	6.66	-2.14
68	SLU 59	-76	-8	2227	-15.4	6.74	-2.12
68	SLU 60	-75	-9	2334	-15.51	7.16	-2.12
68	SLU 61	-71	-10	2326	-15.4	7.25	-2.1
68	SLU 62	-77	-9	2339	-15.81	7.12	-2.17
68	SLU 63	-73	-9	2331	-15.69	7.21	-2.15
68	SLU 64	-79	-8	2175	-14.68	6.53	-2.01
68	SLU 65	-73	-10	2160	-14.49	6.68	-1.97
68	SLU 66	-80	-8	2186	-15.06	6.56	-2.07
68	SLU 67	-76	-9	2177	-14.95	6.65	-2.05
68	SLU 68	-75	-9	2165	-14.78	6.65	-2.02
68	SLU 69	-81	-8	2191	-15.35	6.53	-2.12
68	SLU 70	-78	-8	2182	-15.24	6.62	-2.09
68	SLU 71	-83	-8	2185	-15.26	6.47	-2.1
68	SLU 72	-79	-8	2176	-15.15	6.55	-2.08
68	SLU 73	-71	-11	2413	-15.85	7.69	-2.15
68	SLU 74	-77	-10	2439	-16.42	7.58	-2.25
68	SLU 75	-74	-10	2430	-16.3	7.67	-2.22
68	SLU 76	-73	-11	2418	-16.14	7.66	-2.19
68	SLU 77	-79	-9	2444	-16.71	7.55	-2.29
68	SLU 78	-75	-10	2435	-16.6	7.64	-2.27
68	SLU 79	-80	-9	2438	-16.61	7.48	-2.28
68	SLU 80	-77	-10	2429	-16.5	7.57	-2.26
68	SLU 81	-76	-11	2536	-16.61	7.98	-2.26
68	SLU 82	-72	-11	2527	-16.5	8.07	-2.24
68	SLU 83	-77	-10	2541	-16.9	7.95	-2.31
68	SLU 84	-74	-11	2533	-16.79	8.04	-2.29
68	SLE RA 1	-61	-6	1628	-11.05	4.84	-1.52
68	SLE RA 2	-57	-7	1619	-10.93	4.94	-1.49
68	SLE RA 3	-61	-6	1636	-11.3	4.87	-1.56
68	SLE RA 4	-59	-6	1630	-11.23	4.92	-1.54
68	SLE RA 5	-58	-7	1622	-11.12	4.92	-1.52
68	SLE RA 6	-62	-6	1639	-11.5	4.84	-1.59
68	SLE RA 7	-60	-6	1633	-11.42	4.9	-1.57
68	SLE RA 8	-63	-6	1635	-11.44	4.8	-1.58
68	SLE RA 9	-61	-6	1629	-11.36	4.86	-1.56
68	SLE RA 10	-55	-8	1787	-11.83	5.62	-1.61
68	SLE RA 11	-60	-7	1805	-12.21	5.54	-1.67
68	SLE RA 12	-57	-7	1799	-12.13	5.6	-1.66
68	SLE RA 13	-56	-8	1791	-12.02	5.6	-1.64
68	SLE RA 14	-61	-7	1808	-12.4	5.52	-1.7
68	SLE RA 15	-58	-7	1802	-12.33	5.58	-1.69
68	SLE RA 16	-61	-7	1804	-12.34	5.48	-1.7
68	SLE RA 17	-59	-7	1798	-12.27	5.53	-1.68
68	SLE RA 18	-59	-8	1869	-12.34	5.81	-1.68
68	SLE RA 19	-56	-8	1864	-12.27	5.87	-1.67
68	SLE RA 20	-60	-7	1873	-12.53	5.79	-1.72
68	SLE RA 21	-57	-8	1867	-12.46	5.85	-1.7
68	SLE FR 1	-61	-6	1628	-11.05	4.84	-1.52
68	SLE FR 2	-60	-6	1626	-11.02	4.86	-1.51
68	SLE FR 3	-61	-6	1630	-11.13	4.83	-1.53
68	SLE FR 4	-59	-7	1699	-11.41	5.15	-1.56
68	SLE FR 5	-61	-6	1702	-11.51	5.12	-1.58
68	SLE FR 6	-60	-7	1749	-11.69	5.33	-1.6
68	SLE QP 1	-61	-6	1628	-11.05	4.84	-1.52
68	SLE QP 2	-60	-7	1701	-11.44	5.13	-1.57
68	SLD 1	38	-9	1914	-10.71	9.22	-1.43
68	SLD 2	38	-9	1914	-10.71	9.22	-1.43
68	SLD 3	9	-43	1867	-3.06	8.14	0.03
68	SLD 4	9	-43	1867	-3.06	8.14	0.03
68	SLD 5	13	43	1836	-22.82	7.99	-3.75
68	SLD 6	13	43	1836	-22.82	7.99	-3.75
68	SLD 7	-84	-68	1680	2.68	4.41	1.14
68	SLD 8	-84	-68	1680	2.68	4.41	1.14
68	SLD 9	-37	55	1722	-25.55	5.86	-4.27
68	SLD 10	-37	55	1722	-25.55	5.86	-4.27
68	SLD 11	-134	-57	1566	-0.05	2.28	0.62
68	SLD 12	-134	-57	1566	-0.05	2.28	0.62
68	SLD 13	-129	30	1534	-19.81	2.12	-3.17

Nodo	Cont.	Reazione a traslazione			Reazione a rotazione		
Ind.	N.br.	x	y	z	x	y	z
68	SLD 14	-129	30	1534	-19.81	2.12	-3.17
68	SLD 15	-158	-4	1487	-12.16	1.05	-1.7
68	SLD 16	-158	-4	1487	-12.16	1.05	-1.7
68	SLV 1	170	-13	2203	-9.72	14.7	-1.25
68	SLV 2	170	-13	2203	-9.72	14.7	-1.25
68	SLV 3	100	-92	2087	8.21	12.16	2.19
68	SLV 4	100	-92	2087	8.21	12.16	2.19
68	SLV 5	115	111	2027	-38.1	11.86	-6.69
68	SLV 6	115	111	2027	-38.1	11.86	-6.69
68	SLV 7	-118	-151	1641	21.64	3.38	4.78
68	SLV 8	-118	-151	1641	21.64	3.38	4.78
68	SLV 9	-2	138	1760	-44.51	6.88	-7.91
68	SLV 10	-2	138	1760	-44.51	6.88	-7.91
68	SLV 11	-235	-124	1375	15.23	-1.59	3.56
68	SLV 12	-235	-124	1375	15.23	-1.59	3.56
68	SLV 13	-221	79	1314	-31.08	-1.89	-5.32
68	SLV 14	-221	79	1314	-31.08	-1.89	-5.32
68	SLV 15	-290	0	1198	-13.16	-4.43	-1.88
68	SLV 16	-290	0	1198	-13.16	-4.43	-1.88
69	SLU 1	713	0	2576	0.34	19.46	-0.03
69	SLU 2	807	1	2839	0.39	22.38	-0.04
69	SLU 3	718	1	2599	0.34	19.57	-0.03
69	SLU 4	775	1	2756	0.37	21.31	-0.03
69	SLU 5	805	1	2837	0.39	22.25	-0.04
69	SLU 6	716	1	2597	0.34	19.44	-0.02
69	SLU 7	773	1	2754	0.37	21.19	-0.03
69	SLU 8	709	1	2572	0.34	19.21	-0.03
69	SLU 9	765	1	2730	0.37	20.96	-0.03
69	SLU 10	912	1	3229	0.46	25.21	-0.04
69	SLU 11	823	1	2989	0.41	22.4	-0.03
69	SLU 12	880	1	3147	0.44	24.14	-0.04
69	SLU 13	910	1	3227	0.46	25.08	-0.04
69	SLU 14	821	1	2987	0.41	22.27	-0.03
69	SLU 15	878	1	3145	0.44	24.02	-0.04
69	SLU 16	814	0	2962	0.41	22.04	-0.03
69	SLU 17	870	1	3120	0.44	23.79	-0.04
69	SLU 18	863	0	3134	0.44	23.5	-0.04
69	SLU 19	920	1	3291	0.47	25.25	-0.04
69	SLU 20	861	0	3132	0.44	23.38	-0.04
69	SLU 21	918	1	3289	0.47	25.13	-0.04
69	SLU 22	805	0	2911	0.4	21.98	-0.03
69	SLU 23	899	1	3174	0.45	24.89	-0.04
69	SLU 24	810	1	2934	0.4	22.08	-0.03
69	SLU 25	867	1	3091	0.43	23.83	-0.04
69	SLU 26	897	1	3172	0.45	24.77	-0.04
69	SLU 27	808	1	2932	0.4	21.96	-0.03
69	SLU 28	865	1	3089	0.43	23.7	-0.04
69	SLU 29	800	0	2907	0.4	21.73	-0.03
69	SLU 30	857	1	3065	0.43	23.47	-0.04
69	SLU 31	1004	1	3564	0.52	27.72	-0.05
69	SLU 32	915	0	3324	0.47	24.91	-0.04
69	SLU 33	972	1	3482	0.5	26.66	-0.05
69	SLU 34	1002	1	3562	0.52	27.6	-0.05
69	SLU 35	913	1	3322	0.47	24.79	-0.04
69	SLU 36	970	1	3480	0.5	26.53	-0.05
69	SLU 37	905	0	3298	0.47	24.56	-0.04
69	SLU 38	962	1	3455	0.5	26.3	-0.05
69	SLU 39	955	0	3469	0.51	26.02	-0.04
69	SLU 40	1011	1	3626	0.53	27.77	-0.05
69	SLU 41	953	0	3467	0.5	25.89	-0.04
69	SLU 42	1009	1	3624	0.53	27.64	-0.05
69	SLU 43	895	1	3234	0.42	24.44	-0.03
69	SLU 44	990	1	3497	0.47	27.35	-0.04
69	SLU 45	901	1	3257	0.42	24.54	-0.03
69	SLU 46	957	1	3414	0.45	26.29	-0.04
69	SLU 47	988	1	3495	0.47	27.23	-0.04
69	SLU 48	899	1	3255	0.42	24.42	-0.03
69	SLU 49	955	1	3412	0.45	26.17	-0.04
69	SLU 50	891	1	3230	0.42	24.19	-0.03
69	SLU 51	948	1	3388	0.45	25.94	-0.04
69	SLU 52	1095	1	3887	0.54	30.18	-0.05
69	SLU 53	1006	1	3647	0.49	27.37	-0.04
69	SLU 54	1062	1	3804	0.52	29.12	-0.04
69	SLU 55	1093	1	3885	0.54	30.06	-0.05
69	SLU 56	1004	1	3645	0.49	27.25	-0.04
69	SLU 57	1060	1	3803	0.52	29	-0.04
69	SLU 58	996	1	3620	0.49	27.02	-0.04
69	SLU 59	1053	1	3778	0.52	28.77	-0.05
69	SLU 60	1045	1	3791	0.53	28.48	-0.04
69	SLU 61	1102	1	3949	0.55	30.23	-0.05
69	SLU 62	1043	1	3789	0.52	28.36	-0.04
69	SLU 63	1100	1	3947	0.55	30.1	-0.05
69	SLU 64	987	1	3569	0.49	26.95	-0.04
69	SLU 65	1082	1	3832	0.53	29.87	-0.05
69	SLU 66	992	1	3592	0.48	27.06	-0.04
69	SLU 67	1049	1	3749	0.51	28.81	-0.04
69	SLU 68	1079	1	3830	0.53	29.74	-0.05
69	SLU 69	990	1	3590	0.48	26.93	-0.04
69	SLU 70	1047	1	3747	0.51	28.68	-0.04
69	SLU 71	983	1	3565	0.48	26.7	-0.04

Nodo	Cont.	Reazione a traslazione			Reazione a rotazione		
Ind.	N.br.	x	y	z	x	y	z
69	SLU 72	1040	1	3723	0.51	28.45	-0.04
69	SLU 73	1187	1	4222	0.6	32.7	-0.06
69	SLU 74	1097	1	3982	0.55	29.89	-0.05
69	SLU 75	1154	1	4140	0.58	31.64	-0.05
69	SLU 76	1184	1	4220	0.6	32.57	-0.06
69	SLU 77	1095	1	3980	0.55	29.76	-0.04
69	SLU 78	1152	1	4138	0.58	31.51	-0.05
69	SLU 79	1088	1	3955	0.55	29.53	-0.05
69	SLU 80	1145	1	4113	0.58	31.28	-0.05
69	SLU 81	1137	1	4126	0.59	31	-0.05
69	SLU 82	1194	1	4284	0.62	32.74	-0.06
69	SLU 83	1135	1	4125	0.59	30.87	-0.05
69	SLU 84	1192	1	4282	0.61	32.62	-0.06
69	SLE RA 1	739	0	2672	0.36	20.18	-0.03
69	SLE RA 2	802	1	2847	0.39	22.12	-0.04
69	SLE RA 3	743	0	2687	0.36	20.25	-0.03
69	SLE RA 4	781	1	2792	0.38	21.42	-0.03
69	SLE RA 5	801	1	2846	0.39	22.04	-0.03
69	SLE RA 6	741	1	2686	0.36	20.17	-0.03
69	SLE RA 7	779	1	2791	0.38	21.33	-0.03
69	SLE RA 8	736	0	2669	0.36	20.01	-0.03
69	SLE RA 9	774	1	2774	0.38	21.18	-0.03
69	SLE RA 10	872	1	3107	0.44	24.01	-0.04
69	SLE RA 11	813	0	2947	0.41	22.14	-0.03
69	SLE RA 12	851	1	3052	0.43	23.3	-0.04
69	SLE RA 13	871	1	3106	0.44	23.93	-0.04
69	SLE RA 14	811	1	2946	0.41	22.05	-0.03
69	SLE RA 15	849	1	3051	0.42	23.22	-0.04
69	SLE RA 16	806	0	2929	0.41	21.9	-0.03
69	SLE RA 17	844	1	3034	0.43	23.07	-0.04
69	SLE RA 18	839	0	3043	0.43	22.88	-0.04
69	SLE RA 19	877	1	3148	0.45	24.04	-0.04
69	SLE RA 20	838	0	3042	0.43	22.79	-0.04
69	SLE RA 21	876	1	3147	0.45	23.96	-0.04
69	SLE FR 1	739	0	2672	0.36	20.18	-0.03
69	SLE FR 2	752	1	2707	0.37	20.57	-0.03
69	SLE FR 3	739	0	2671	0.36	20.15	-0.03
69	SLE FR 4	782	1	2818	0.39	21.38	-0.03
69	SLE FR 5	769	0	2783	0.38	20.96	-0.03
69	SLE FR 6	789	0	2858	0.39	21.53	-0.03
69	SLE QP 1	739	0	2672	0.36	20.18	-0.03
69	SLE QP 2	769	0	2783	0.38	20.99	-0.03
69	SLD 1	1215	-1	4061	0.56	36.78	-0.07
69	SLD 2	1215	-1	4061	0.56	36.78	-0.07
69	SLD 3	1093	-6	3661	1.46	33.03	-0.26
69	SLD 4	1093	-6	3661	1.46	33.03	-0.26
69	SLD 5	1087	7	3773	-0.93	31.42	0.26
69	SLD 6	1087	7	3773	-0.93	31.42	0.26
69	SLD 7	682	-9	2440	2.07	18.91	-0.4
69	SLD 8	682	-9	2440	2.07	18.91	-0.4
69	SLD 9	857	10	3126	-1.3	23.07	0.34
69	SLD 10	857	10	3126	-1.3	23.07	0.34
69	SLD 11	451	-7	1793	1.69	10.56	-0.32
69	SLD 12	451	-7	1793	1.69	10.56	-0.32
69	SLD 13	445	7	1905	-0.7	8.95	0.2
69	SLD 14	445	7	1905	-0.7	8.95	0.2
69	SLD 15	324	2	1505	0.2	5.2	0
69	SLD 16	324	2	1505	0.2	5.2	0
69	SLV 1	1816	-3	5785	0.78	58.07	-0.11
69	SLV 2	1816	-3	5785	0.78	58.07	-0.11
69	SLV 3	1523	-15	4826	2.94	49.03	-0.58
69	SLV 4	1523	-15	4826	2.94	49.03	-0.58
69	SLV 5	1526	17	5137	-2.78	45.82	0.67
69	SLV 6	1526	17	5137	-2.78	45.82	0.67
69	SLV 7	552	-22	1943	4.42	15.7	-0.92
69	SLV 8	552	-22	1943	4.42	15.7	-0.92
69	SLV 9	986	23	3624	-3.66	26.28	0.86
69	SLV 10	986	23	3624	-3.66	26.28	0.86
69	SLV 11	12	-16	429	3.54	-3.84	-0.73
69	SLV 12	12	-16	429	3.54	-3.84	-0.73
69	SLV 13	15	15	740	-2.18	-7.06	0.52
69	SLV 14	15	15	740	-2.18	-7.06	0.52
69	SLV 15	-277	4	-218	-0.02	-16.09	0.05
69	SLV 16	-277	4	-218	-0.02	-16.09	0.05
70	SLU 1	449	-366	6308	0.98	18.92	-0.1
70	SLU 2	539	-456	6935	3.95	20.93	-0.19
70	SLU 3	449	-370	6377	0.93	18.79	-0.1
70	SLU 4	504	-424	6754	2.71	20	-0.15
70	SLU 5	533	-459	6953	3.96	20.43	-0.19
70	SLU 6	443	-374	6396	0.93	18.29	-0.1
70	SLU 7	498	-428	6772	2.72	19.49	-0.16
70	SLU 8	437	-372	6345	0.99	17.92	-0.1
70	SLU 9	491	-427	6721	2.77	19.13	-0.16
70	SLU 10	598	-507	7882	4.11	23.49	-0.2
70	SLU 11	508	-421	7325	1.08	21.35	-0.11
70	SLU 12	563	-475	7701	2.87	22.56	-0.16
70	SLU 13	592	-510	7901	4.11	22.99	-0.2
70	SLU 14	502	-425	7343	1.09	20.85	-0.11
70	SLU 15	557	-479	7719	2.87	22.06	-0.17
70	SLU 16	496	-423	7292	1.14	20.48	-0.11

Nodo	Cont.	Reazione a traslazione			Reazione a rotazione		
Ind.	N.br.	x	y	z	x	y	z
70	SLU 17	550	-478	7668	2.93	21.69	-0.17
70	SLU 18	533	-438	7662	1.2	22.58	-0.11
70	SLU 19	587	-493	8038	2.98	23.79	-0.17
70	SLU 20	527	-442	7680	1.2	22.08	-0.12
70	SLU 21	581	-496	8056	2.99	23.29	-0.17
70	SLU 22	503	-409	7112	1.07	21.36	-0.1
70	SLU 23	594	-499	7739	4.04	23.37	-0.19
70	SLU 24	504	-414	7182	1.02	21.23	-0.1
70	SLU 25	558	-468	7558	2.8	22.43	-0.16
70	SLU 26	588	-503	7757	4.05	22.87	-0.2
70	SLU 27	498	-417	7200	1.03	20.73	-0.11
70	SLU 28	553	-471	7576	2.81	21.93	-0.16
70	SLU 29	492	-416	7149	1.08	20.36	-0.11
70	SLU 30	546	-470	7525	2.86	21.57	-0.16
70	SLU 31	653	-550	8687	4.2	25.93	-0.21
70	SLU 32	563	-465	8129	1.18	23.79	-0.11
70	SLU 33	617	-519	8505	2.96	24.99	-0.17
70	SLU 34	647	-554	8705	4.2	25.43	-0.21
70	SLU 35	557	-468	8147	1.18	23.29	-0.12
70	SLU 36	612	-522	8523	2.97	24.49	-0.17
70	SLU 37	551	-467	8096	1.23	22.92	-0.12
70	SLU 38	605	-521	8472	3.02	24.13	-0.18
70	SLU 39	588	-482	8466	1.29	25.02	-0.12
70	SLU 40	642	-536	8842	3.07	26.23	-0.17
70	SLU 41	582	-485	8484	1.29	24.52	-0.12
70	SLU 42	636	-539	8860	3.08	25.73	-0.18
70	SLU 43	564	-460	7925	1.24	23.76	-0.12
70	SLU 44	655	-551	8552	4.21	25.77	-0.21
70	SLU 45	565	-465	7994	1.19	23.63	-0.12
70	SLU 46	619	-519	8370	2.97	24.84	-0.18
70	SLU 47	649	-554	8570	4.22	25.27	-0.22
70	SLU 48	559	-469	8012	1.19	23.13	-0.13
70	SLU 49	614	-523	8389	2.98	24.34	-0.18
70	SLU 50	553	-467	7961	1.25	22.76	-0.13
70	SLU 51	607	-521	8337	3.03	23.97	-0.18
70	SLU 52	714	-602	9499	4.37	28.34	-0.23
70	SLU 53	624	-516	8942	1.34	26.19	-0.14
70	SLU 54	678	-570	9318	3.13	27.4	-0.19
70	SLU 55	708	-605	9517	4.37	27.84	-0.23
70	SLU 56	618	-520	8960	1.35	25.69	-0.14
70	SLU 57	673	-574	9336	3.13	26.9	-0.19
70	SLU 58	612	-518	8909	1.4	25.33	-0.14
70	SLU 59	666	-572	9285	3.19	26.53	-0.2
70	SLU 60	649	-533	9278	1.46	27.42	-0.14
70	SLU 61	703	-587	9654	3.24	28.63	-0.19
70	SLU 62	643	-537	9296	1.46	26.92	-0.14
70	SLU 63	697	-591	9673	3.25	28.13	-0.2
70	SLU 64	619	-504	8729	1.33	26.2	-0.13
70	SLU 65	710	-594	9356	4.3	28.21	-0.22
70	SLU 66	620	-508	8798	1.28	26.07	-0.13
70	SLU 67	674	-563	9174	3.07	27.27	-0.18
70	SLU 68	704	-597	9374	4.31	27.71	-0.22
70	SLU 69	614	-512	8817	1.29	25.57	-0.13
70	SLU 70	668	-566	9193	3.07	26.77	-0.19
70	SLU 71	608	-511	8765	1.34	25.2	-0.14
70	SLU 72	662	-565	9142	3.12	26.41	-0.19
70	SLU 73	769	-645	10303	4.46	30.77	-0.23
70	SLU 74	679	-559	9746	1.44	28.63	-0.14
70	SLU 75	733	-614	10122	3.22	29.84	-0.2
70	SLU 76	763	-648	10322	4.46	30.27	-0.24
70	SLU 77	673	-563	9764	1.44	28.13	-0.15
70	SLU 78	727	-617	10140	3.23	29.34	-0.2
70	SLU 79	667	-562	9713	1.49	27.76	-0.15
70	SLU 80	721	-616	10089	3.28	28.97	-0.2
70	SLU 81	703	-577	10082	1.55	29.86	-0.15
70	SLU 82	758	-631	10459	3.34	31.07	-0.2
70	SLU 83	698	-580	10101	1.56	29.36	-0.15
70	SLU 84	752	-634	10477	3.34	30.57	-0.2
70	SLE RA 1	464	-378	6538	1	19.62	-0.1
70	SLE RA 2	525	-438	6956	2.98	20.96	-0.16
70	SLE RA 3	465	-381	6584	0.97	19.53	-0.1
70	SLE RA 4	501	-417	6835	2.16	20.33	-0.14
70	SLE RA 5	521	-440	6968	2.99	20.63	-0.16
70	SLE RA 6	461	-383	6596	0.97	19.2	-0.1
70	SLE RA 7	497	-419	6847	2.16	20	-0.14
70	SLE RA 8	457	-383	6562	1.01	18.95	-0.1
70	SLE RA 9	493	-419	6813	2.2	19.76	-0.14
70	SLE RA 10	564	-472	7587	3.09	22.67	-0.17
70	SLE RA 11	504	-415	7216	1.07	21.24	-0.11
70	SLE RA 12	540	-451	7466	2.26	22.04	-0.14
70	SLE RA 13	560	-474	7600	3.09	22.33	-0.17
70	SLE RA 14	500	-417	7228	1.08	20.9	-0.11
70	SLE RA 15	536	-453	7479	2.27	21.71	-0.15
70	SLE RA 16	496	-416	7194	1.11	20.66	-0.11
70	SLE RA 17	532	-453	7445	2.3	21.46	-0.15
70	SLE RA 18	520	-427	7440	1.15	22.06	-0.11
70	SLE RA 19	557	-463	7691	2.34	22.86	-0.15
70	SLE RA 20	517	-429	7452	1.15	21.73	-0.11
70	SLE RA 21	553	-465	7703	2.34	22.53	-0.15
70	SLE FR 1	464	-378	6538	1	19.62	-0.1

Nodo	Cont.	Reazione a traslazione			Reazione a rotazione		
Ind.	N.br.	x	y	z	x	y	z
70	SLE FR 2	476	-390	6621	1.4	19.89	-0.11
70	SLE FR 3	463	-379	6543	1	19.49	-0.1
70	SLE FR 4	493	-405	6892	1.44	20.62	-0.11
70	SLE FR 5	480	-393	6813	1.05	20.22	-0.1
70	SLE FR 6	492	-402	6989	1.08	20.84	-0.1
70	SLE QP 1	464	-378	6538	1	19.62	-0.1
70	SLE QP 2	481	-393	6809	1.05	20.35	-0.1
70	SLD 1	1002	-346	8959	-0.77	55.25	0.17
70	SLD 2	1002	-346	8959	-0.77	55.25	0.17
70	SLD 3	867	-574	7875	7.64	44.05	-0.14
70	SLD 4	867	-574	7875	7.64	44.05	-0.14
70	SLD 5	842	-33	9097	-12.26	47.81	0.46
70	SLD 6	842	-33	9097	-12.26	47.81	0.46
70	SLD 7	393	-793	5484	15.78	10.47	-0.59
70	SLD 8	393	-793	5484	15.78	10.47	-0.59
70	SLD 9	569	7	8133	-13.69	30.23	0.39
70	SLD 10	569	7	8133	-13.69	30.23	0.39
70	SLD 11	120	-752	4520	14.35	-7.11	-0.66
70	SLD 12	120	-752	4520	14.35	-7.11	-0.66
70	SLD 13	95	-211	5742	-5.54	-3.35	-0.06
70	SLD 14	95	-211	5742	-5.54	-3.35	-0.06
70	SLD 15	-40	-439	4658	2.87	-14.55	-0.37
70	SLD 16	-40	-439	4658	2.87	-14.55	-0.37
70	SLV 1	1706	-281	11874	-3.31	102.39	0.55
70	SLV 2	1706	-281	11874	-3.31	102.39	0.55
70	SLV 3	1379	-828	9277	16.89	75.41	-0.21
70	SLV 4	1379	-828	9277	16.89	75.41	-0.21
70	SLV 5	1343	471	12267	-30.89	85.89	1.24
70	SLV 6	1343	471	12267	-30.89	85.89	1.24
70	SLV 7	256	-1353	3610	36.43	-4.06	-1.28
70	SLV 8	256	-1353	3610	36.43	-4.06	-1.28
70	SLV 9	707	568	10007	-34.34	44.76	1.08
70	SLV 10	707	568	10007	-34.34	44.76	1.08
70	SLV 11	-381	-1256	1350	32.98	-45.19	-1.44
70	SLV 12	-381	-1256	1350	32.98	-45.19	-1.44
70	SLV 13	-417	43	4340	-14.79	-34.71	0.01
70	SLV 14	-417	43	4340	-14.79	-34.71	0.01
70	SLV 15	-744	-504	1743	5.4	-61.69	-0.75
70	SLV 16	-744	-504	1743	5.4	-61.69	-0.75
71	SLU 1	360	-10	4014	2.52	15.97	0.2
71	SLU 2	468	-12	4374	3.39	20.16	0.25
71	SLU 3	357	-10	4064	2.58	15.88	0.2
71	SLU 4	422	-11	4280	3.1	18.39	0.23
71	SLU 5	457	-12	4393	3.42	19.77	0.25
71	SLU 6	346	-10	4083	2.61	15.48	0.21
71	SLU 7	411	-11	4299	3.13	18	0.24
71	SLU 8	338	-10	4052	2.59	15.18	0.2
71	SLU 9	403	-11	4268	3.11	17.69	0.23
71	SLU 10	509	-13	4973	3.74	22.16	0.27
71	SLU 11	398	-11	4662	2.93	17.88	0.23
71	SLU 12	463	-13	4878	3.45	20.4	0.26
71	SLU 13	498	-13	4992	3.77	21.77	0.27
71	SLU 14	387	-11	4681	2.96	17.48	0.23
71	SLU 15	452	-13	4897	3.48	20	0.26
71	SLU 16	380	-11	4651	2.94	17.18	0.23
71	SLU 17	444	-13	4867	3.46	19.69	0.26
71	SLU 18	419	-11	4869	3.02	18.83	0.23
71	SLU 19	484	-13	5085	3.54	21.35	0.26
71	SLU 20	408	-12	4888	3.06	18.43	0.23
71	SLU 21	473	-13	5104	3.58	20.95	0.26
71	SLU 22	404	-11	4517	2.83	17.98	0.22
71	SLU 23	512	-13	4878	3.69	22.17	0.27
71	SLU 24	400	-11	4567	2.89	17.89	0.22
71	SLU 25	465	-12	4783	3.4	20.4	0.25
71	SLU 26	501	-13	4897	3.72	21.77	0.27
71	SLU 27	389	-11	4586	2.92	17.49	0.23
71	SLU 28	454	-13	4802	3.44	20	0.26
71	SLU 29	382	-11	4556	2.89	17.18	0.22
71	SLU 30	447	-12	4772	3.41	19.7	0.25
71	SLU 31	553	-14	5476	4.04	24.17	0.29
71	SLU 32	442	-12	5166	3.24	19.89	0.25
71	SLU 33	506	-14	5382	3.75	22.4	0.28
71	SLU 34	542	-15	5495	4.07	23.77	0.29
71	SLU 35	431	-12	5185	3.27	19.49	0.25
71	SLU 36	495	-14	5401	3.79	22	0.28
71	SLU 37	423	-12	5154	3.25	19.18	0.25
71	SLU 38	488	-14	5370	3.76	21.7	0.28
71	SLU 39	463	-13	5372	3.33	20.84	0.25
71	SLU 40	527	-14	5588	3.85	23.35	0.28
71	SLU 41	452	-13	5391	3.36	20.44	0.26
71	SLU 42	516	-14	5607	3.88	22.95	0.29
71	SLU 43	453	-12	5046	3.17	20.08	0.25
71	SLU 44	561	-15	5406	4.04	24.27	0.3
71	SLU 45	450	-12	5096	3.23	19.98	0.25
71	SLU 46	515	-14	5312	3.75	22.5	0.28
71	SLU 47	550	-15	5425	4.07	23.87	0.3
71	SLU 48	439	-13	5115	3.27	19.59	0.26
71	SLU 49	504	-14	5331	3.78	22.1	0.29
71	SLU 50	432	-12	5084	3.24	19.28	0.26
71	SLU 51	496	-14	5300	3.76	21.8	0.29

Nodo	Cont.	Reazione a traslazione			Reazione a rotazione		
Ind.	N.br.	x	y	z	x	y	z
71	SLU 52	602	-16	6004	4.39	26.27	0.32
71	SLU 53	491	-14	5694	3.58	21.98	0.28
71	SLU 54	556	-15	5910	4.1	24.5	0.31
71	SLU 55	592	-16	6023	4.42	25.87	0.33
71	SLU 56	480	-14	5713	3.62	21.59	0.28
71	SLU 57	545	-15	5929	4.13	24.1	0.31
71	SLU 58	473	-14	5682	3.59	21.28	0.28
71	SLU 59	537	-15	5898	4.11	23.8	0.31
71	SLU 60	512	-14	5901	3.68	22.93	0.28
71	SLU 61	577	-15	6117	4.19	25.45	0.31
71	SLU 62	501	-14	5920	3.71	22.54	0.29
71	SLU 63	566	-16	6136	4.23	25.05	0.32
71	SLU 64	497	-13	5549	3.48	22.08	0.27
71	SLU 65	605	-16	5909	4.34	26.27	0.32
71	SLU 66	494	-14	5599	3.54	21.99	0.28
71	SLU 67	558	-15	5815	4.06	24.51	0.31
71	SLU 68	594	-16	5928	4.38	25.88	0.32
71	SLU 69	483	-14	5618	3.57	21.59	0.28
71	SLU 70	547	-15	5834	4.09	24.11	0.31
71	SLU 71	475	-14	5587	3.55	21.29	0.28
71	SLU 72	540	-15	5803	4.06	23.8	0.31
71	SLU 73	646	-17	6508	4.69	28.27	0.34
71	SLU 74	535	-15	6197	3.89	23.99	0.3
71	SLU 75	600	-16	6413	4.41	26.51	0.33
71	SLU 76	635	-17	6527	4.73	27.88	0.35
71	SLU 77	524	-15	6216	3.92	23.59	0.3
71	SLU 78	589	-16	6432	4.44	26.11	0.33
71	SLU 79	516	-15	6186	3.9	23.29	0.3
71	SLU 80	581	-16	6402	4.41	25.8	0.33
71	SLU 81	556	-15	6404	3.98	24.94	0.3
71	SLU 82	620	-16	6620	4.5	27.46	0.33
71	SLU 83	545	-15	6423	4.02	24.54	0.31
71	SLU 84	610	-17	6639	4.53	27.06	0.34
71	SLE RA 1	373	-10	4158	2.61	16.55	0.2
71	SLE RA 2	445	-12	4398	3.19	19.34	0.24
71	SLE RA 3	370	-10	4191	2.65	16.48	0.21
71	SLE RA 4	414	-11	4335	2.99	18.16	0.23
71	SLE RA 5	437	-12	4411	3.21	19.07	0.24
71	SLE RA 6	363	-10	4204	2.67	16.22	0.21
71	SLE RA 7	406	-11	4348	3.02	17.9	0.23
71	SLE RA 8	358	-10	4183	2.65	16.01	0.21
71	SLE RA 9	401	-11	4327	3	17.69	0.23
71	SLE RA 10	472	-12	4797	3.42	20.67	0.25
71	SLE RA 11	398	-11	4590	2.88	17.82	0.22
71	SLE RA 12	441	-12	4734	3.23	19.49	0.24
71	SLE RA 13	465	-12	4810	3.44	20.41	0.25
71	SLE RA 14	391	-11	4603	2.9	17.55	0.22
71	SLE RA 15	434	-12	4747	3.25	19.23	0.24
71	SLE RA 16	386	-11	4582	2.89	17.35	0.22
71	SLE RA 17	429	-12	4726	3.23	19.02	0.24
71	SLE RA 18	412	-11	4728	2.94	18.45	0.23
71	SLE RA 19	455	-12	4872	3.29	20.13	0.25
71	SLE RA 20	405	-11	4741	2.97	18.19	0.23
71	SLE RA 21	448	-12	4885	3.31	19.86	0.25
71	SLE FR 1	373	-10	4158	2.61	16.55	0.2
71	SLE FR 2	387	-10	4206	2.72	17.1	0.21
71	SLE FR 3	370	-10	4163	2.62	16.44	0.2
71	SLE FR 4	399	-11	4377	2.83	17.68	0.22
71	SLE FR 5	382	-10	4334	2.72	17.01	0.21
71	SLE FR 6	392	-11	4443	2.78	17.5	0.21
71	SLE QP 1	373	-10	4158	2.61	16.55	0.2
71	SLE QP 2	384	-10	4329	2.71	17.12	0.21
71	SLD 1	1172	-9	5150	2.45	46.9	0.17
71	SLD 2	1172	-9	5150	2.45	46.9	0.17
71	SLD 3	962	-4	4659	0.85	39.56	0.01
71	SLD 4	962	-4	4659	0.85	39.56	0.01
71	SLD 5	940	-18	5320	5.06	37.18	0.44
71	SLD 6	940	-18	5320	5.06	37.18	0.44
71	SLD 7	238	0	3684	-0.28	12.72	-0.1
71	SLD 8	238	0	3684	-0.28	12.72	-0.1
71	SLD 9	531	-21	4974	5.7	21.51	0.52
71	SLD 10	531	-21	4974	5.7	21.51	0.52
71	SLD 11	-171	-2	3338	0.36	-2.95	-0.02
71	SLD 12	-171	-2	3338	0.36	-2.95	-0.02
71	SLD 13	-193	-17	3999	4.57	-5.33	0.41
71	SLD 14	-193	-17	3999	4.57	-5.33	0.41
71	SLD 15	-403	-11	3508	2.97	-12.67	0.25
71	SLD 16	-403	-11	3508	2.97	-12.67	0.25
71	SLV 1	2237	-8	6261	2.13	87.11	0.11
71	SLV 2	2237	-8	6261	2.13	87.11	0.11
71	SLV 3	1726	5	5095	-1.71	69.33	-0.27
71	SLV 4	1726	5	5095	-1.71	69.33	-0.27
71	SLV 5	1715	-30	6678	8.36	65.08	0.77
71	SLV 6	1715	-30	6678	8.36	65.08	0.77
71	SLV 7	12	14	2789	-4.44	5.82	-0.52
71	SLV 8	12	14	2789	-4.44	5.82	-0.52
71	SLV 9	757	-35	5869	9.86	28.42	0.94
71	SLV 10	757	-35	5869	9.86	28.42	0.94
71	SLV 11	-946	9	1979	-2.94	-30.85	-0.35
71	SLV 12	-946	9	1979	-2.94	-30.85	-0.35

Nodo	Cont.	Reazione a traslazione			Reazione a rotazione		
Ind.	N.br.	x	y	z	x	y	z
71	SLV 13	-957	-26	3563	7.13	-35.1	0.69
71	SLV 14	-957	-26	3563	7.13	-35.1	0.69
71	SLV 15	-1468	-13	2396	3.29	-52.88	0.31
71	SLV 16	-1468	-13	2396	3.29	-52.88	0.31
72	SLU 1	344	-6	4084	1.66	14.77	-0.04
72	SLU 2	469	-9	4481	2.58	19.9	-0.05
72	SLU 3	339	-6	4139	1.7	14.54	-0.04
72	SLU 4	414	-8	4376	2.25	17.62	-0.04
72	SLU 5	456	-9	4504	2.6	19.31	-0.05
72	SLU 6	326	-6	4162	1.72	13.95	-0.04
72	SLU 7	401	-8	4399	2.27	17.03	-0.04
72	SLU 8	318	-6	4130	1.7	13.59	-0.04
72	SLU 9	393	-8	4368	2.25	16.67	-0.04
72	SLU 10	507	-10	5071	2.81	21.6	-0.05
72	SLU 11	377	-7	4729	1.93	16.24	-0.04
72	SLU 12	452	-9	4967	2.48	19.32	-0.05
72	SLU 13	494	-10	5094	2.83	21.01	-0.05
72	SLU 14	364	-7	4752	1.95	15.65	-0.04
72	SLU 15	439	-9	4990	2.5	18.73	-0.05
72	SLU 16	356	-7	4721	1.93	15.29	-0.04
72	SLU 17	431	-9	4959	2.48	18.37	-0.05
72	SLU 18	398	-7	4928	1.99	17.2	-0.04
72	SLU 19	473	-9	5166	2.54	20.28	-0.05
72	SLU 20	385	-7	4951	2.01	16.61	-0.04
72	SLU 21	460	-9	5189	2.56	19.69	-0.05
72	SLU 22	387	-7	4583	1.86	16.64	-0.04
72	SLU 23	512	-10	4980	2.78	21.77	-0.05
72	SLU 24	382	-7	4638	1.9	16.41	-0.04
72	SLU 25	457	-9	4876	2.45	19.48	-0.05
72	SLU 26	499	-10	5003	2.8	21.18	-0.05
72	SLU 27	369	-7	4661	1.92	15.82	-0.04
72	SLU 28	444	-9	4899	2.47	18.89	-0.05
72	SLU 29	361	-7	4630	1.89	15.46	-0.04
72	SLU 30	436	-9	4867	2.45	18.53	-0.05
72	SLU 31	550	-10	5570	3.01	23.47	-0.06
72	SLU 32	420	-8	5228	2.13	18.11	-0.05
72	SLU 33	495	-9	5466	2.68	21.18	-0.05
72	SLU 34	537	-10	5593	3.03	22.88	-0.06
72	SLU 35	407	-8	5251	2.14	17.52	-0.05
72	SLU 36	482	-10	5489	2.7	20.59	-0.05
72	SLU 37	399	-8	5220	2.12	17.16	-0.05
72	SLU 38	474	-9	5458	2.68	20.24	-0.05
72	SLU 39	441	-8	5427	2.18	19.07	-0.05
72	SLU 40	516	-10	5665	2.74	22.15	-0.05
72	SLU 41	428	-8	5450	2.2	18.48	-0.05
72	SLU 42	503	-10	5688	2.76	21.56	-0.05
72	SLU 43	432	-8	5138	2.09	18.56	-0.04
72	SLU 44	558	-11	5535	3.01	23.69	-0.06
72	SLU 45	428	-8	5193	2.13	18.33	-0.05
72	SLU 46	503	-10	5431	2.68	21.41	-0.05
72	SLU 47	545	-11	5558	3.03	23.1	-0.06
72	SLU 48	415	-8	5216	2.15	17.74	-0.05
72	SLU 49	490	-10	5454	2.7	20.82	-0.05
72	SLU 50	406	-8	5185	2.13	17.38	-0.05
72	SLU 51	482	-10	5422	2.68	20.46	-0.05
72	SLU 52	596	-11	6125	3.24	25.39	-0.06
72	SLU 53	466	-9	5783	2.36	20.03	-0.05
72	SLU 54	541	-10	6021	2.91	23.11	-0.06
72	SLU 55	583	-11	6148	3.26	24.8	-0.06
72	SLU 56	453	-9	5806	2.38	19.44	-0.05
72	SLU 57	528	-10	6044	2.93	22.52	-0.06
72	SLU 58	444	-9	5775	2.36	19.08	-0.05
72	SLU 59	520	-10	6013	2.91	22.16	-0.06
72	SLU 60	487	-9	5982	2.42	20.99	-0.05
72	SLU 61	562	-11	6220	2.97	24.07	-0.06
72	SLU 62	474	-9	6005	2.44	20.4	-0.05
72	SLU 63	549	-11	6243	2.99	23.48	-0.06
72	SLU 64	475	-8	5638	2.29	20.43	-0.05
72	SLU 65	600	-11	6034	3.21	25.56	-0.06
72	SLU 66	470	-9	5692	2.33	20.2	-0.05
72	SLU 67	546	-10	5930	2.88	23.27	-0.06
72	SLU 68	587	-11	6057	3.23	24.97	-0.06
72	SLU 69	457	-9	5715	2.35	19.61	-0.05
72	SLU 70	533	-10	5953	2.9	22.68	-0.06
72	SLU 71	449	-9	5684	2.32	19.25	-0.05
72	SLU 72	524	-10	5921	2.88	22.33	-0.06
72	SLU 73	638	-12	6624	3.44	27.26	-0.07
72	SLU 74	509	-9	6282	2.56	21.9	-0.05
72	SLU 75	584	-11	6520	3.11	24.98	-0.06
72	SLU 76	625	-12	6647	3.46	26.67	-0.07
72	SLU 77	496	-9	6305	2.57	21.31	-0.06
72	SLU 78	571	-11	6543	3.13	24.39	-0.06
72	SLU 79	487	-9	6274	2.55	20.95	-0.05
72	SLU 80	562	-11	6512	3.11	24.03	-0.06
72	SLU 81	530	-10	6481	2.61	22.86	-0.06
72	SLU 82	605	-11	6719	3.17	25.94	-0.06
72	SLU 83	517	-10	6504	2.63	22.27	-0.06
72	SLU 84	592	-11	6742	3.19	25.35	-0.06
72	SLE RA 1	356	-6	4227	1.72	15.3	-0.04
72	SLE RA 2	440	-8	4491	2.33	18.72	-0.05

Nodo	Cont.	Reazione a traslazione			Reazione a rotazione		
Ind.	N.br.	x	y	z	x	y	z
72	SLE RA 3	353	-6	4263	1.74	15.15	-0.04
72	SLE RA 4	403	-8	4422	2.11	17.2	-0.04
72	SLE RA 5	431	-8	4506	2.35	18.33	-0.05
72	SLE RA 6	344	-6	4278	1.75	14.76	-0.04
72	SLE RA 7	394	-8	4437	2.12	16.81	-0.04
72	SLE RA 8	339	-6	4258	1.74	14.52	-0.04
72	SLE RA 9	389	-8	4416	2.11	16.57	-0.04
72	SLE RA 10	465	-9	4885	2.49	19.86	-0.05
72	SLE RA 11	378	-7	4657	1.89	16.28	-0.04
72	SLE RA 12	428	-8	4815	2.27	18.34	-0.05
72	SLE RA 13	456	-9	4900	2.5	19.46	-0.05
72	SLE RA 14	370	-7	4672	1.91	15.89	-0.04
72	SLE RA 15	420	-8	4831	2.28	17.94	-0.05
72	SLE RA 16	364	-7	4651	1.89	15.65	-0.04
72	SLE RA 17	414	-8	4810	2.26	17.7	-0.05
72	SLE RA 18	392	-7	4789	1.93	16.92	-0.04
72	SLE RA 19	442	-8	4948	2.3	18.98	-0.05
72	SLE RA 20	384	-7	4805	1.95	16.53	-0.04
72	SLE RA 21	434	-8	4963	2.32	18.58	-0.05
72	SLE FR 1	356	-6	4227	1.72	15.3	-0.04
72	SLE FR 2	373	-7	4280	1.84	15.99	-0.04
72	SLE FR 3	353	-6	4233	1.72	15.15	-0.04
72	SLE FR 4	384	-7	4448	1.9	16.47	-0.04
72	SLE FR 5	364	-7	4402	1.79	15.63	-0.04
72	SLE FR 6	374	-7	4508	1.82	16.11	-0.04
72	SLE QP 1	356	-6	4227	1.72	15.3	-0.04
72	SLE QP 2	367	-7	4396	1.78	15.79	-0.04
72	SLD 1	1278	-5	5040	1.23	55.48	-0.04
72	SLD 2	1278	-5	5040	1.23	55.48	-0.04
72	SLD 3	1057	1	4577	-0.72	47.02	-0.02
72	SLD 4	1057	1	4577	-0.72	47.02	-0.02
72	SLD 5	975	-15	5291	4.58	40.53	-0.06
72	SLD 6	975	-15	5291	4.58	40.53	-0.06
72	SLD 7	239	4	3748	-1.94	12.32	-0.01
72	SLD 8	239	4	3748	-1.94	12.32	-0.01
72	SLD 9	495	-18	5044	5.5	19.26	-0.07
72	SLD 10	495	-18	5044	5.5	19.26	-0.07
72	SLD 11	-241	2	3500	-1.02	-8.95	-0.01
72	SLD 12	-241	2	3500	-1.02	-8.95	-0.01
72	SLD 13	-323	-14	4215	4.28	-15.44	-0.06
72	SLD 14	-323	-14	4215	4.28	-15.44	-0.06
72	SLD 15	-544	-8	3751	2.33	-23.9	-0.04
72	SLD 16	-544	-8	3751	2.33	-23.9	-0.04
72	SLV 1	2507	-3	5916	0.57	109.01	-0.04
72	SLV 2	2507	-3	5916	0.57	109.01	-0.04
72	SLV 3	1972	11	4814	-4.17	88.51	0
72	SLV 4	1972	11	4814	-4.17	88.51	0
72	SLV 5	1819	-27	6523	8.62	74.85	-0.1
72	SLV 6	1819	-27	6523	8.62	74.85	-0.1
72	SLV 7	38	20	2850	-7.21	6.52	0.04
72	SLV 8	38	20	2850	-7.21	6.52	0.04
72	SLV 9	696	-33	5941	10.77	25.06	-0.12
72	SLV 10	696	-33	5941	10.77	25.06	-0.12
72	SLV 11	-1085	14	2268	-5.06	-43.27	0.03
72	SLV 12	-1085	14	2268	-5.06	-43.27	0.03
72	SLV 13	-1238	-24	3977	7.74	-56.93	-0.08
72	SLV 14	-1238	-24	3977	7.74	-56.93	-0.08
72	SLV 15	-1772	-10	2875	2.99	-77.43	-0.04
72	SLV 16	-1772	-10	2875	2.99	-77.43	-0.04
73	SLU 1	392	3	4104	-0.81	16.27	0.04
73	SLU 2	530	1	4570	-0.49	21.83	0.04
73	SLU 3	387	3	4165	-0.83	16.02	0.04
73	SLU 4	470	2	4445	-0.64	19.36	0.04
73	SLU 5	516	1	4599	-0.51	21.21	0.04
73	SLU 6	374	3	4194	-0.86	15.39	0.04
73	SLU 7	457	2	4473	-0.67	18.73	0.04
73	SLU 8	365	3	4161	-0.85	15.02	0.04
73	SLU 9	448	2	4441	-0.66	18.36	0.04
73	SLU 10	579	2	5146	-0.6	23.99	0.05
73	SLU 11	437	3	4741	-0.94	18.18	0.05
73	SLU 12	520	2	5020	-0.75	21.52	0.05
73	SLU 13	566	2	5174	-0.62	23.37	0.05
73	SLU 14	424	3	4769	-0.96	17.56	0.05
73	SLU 15	507	2	5049	-0.77	20.89	0.05
73	SLU 16	415	3	4737	-0.96	17.18	0.05
73	SLU 17	498	2	5016	-0.77	20.52	0.05
73	SLU 18	463	3	4926	-0.96	19.35	0.05
73	SLU 19	546	2	5206	-0.77	22.69	0.05
73	SLU 20	450	3	4955	-0.98	18.73	0.05
73	SLU 21	532	2	5234	-0.79	22.07	0.05
73	SLU 22	445	3	4597	-0.92	18.52	0.04
73	SLU 23	583	2	5063	-0.6	24.08	0.05
73	SLU 24	441	3	4658	-0.95	18.27	0.05
73	SLU 25	523	2	4938	-0.75	21.61	0.05
73	SLU 26	569	2	5092	-0.62	23.46	0.05
73	SLU 27	427	3	4687	-0.97	17.65	0.05
73	SLU 28	510	2	4967	-0.78	20.98	0.05
73	SLU 29	418	3	4655	-0.96	17.27	0.05
73	SLU 30	501	2	4934	-0.77	20.61	0.05
73	SLU 31	632	2	5639	-0.71	26.24	0.05

Nodo	Cont.	Reazione a traslazione			Reazione a rotazione		
Ind.	N.br.	x	y	z	x	y	z
73	SLU 32	490	3	5234	-1.05	20.43	0.05
73	SLU 33	573	3	5513	-0.86	23.77	0.05
73	SLU 34	619	2	5667	-0.73	25.62	0.05
73	SLU 35	477	3	5262	-1.07	19.81	0.05
73	SLU 36	560	3	5542	-0.88	23.15	0.05
73	SLU 37	468	3	5230	-1.07	19.43	0.05
73	SLU 38	551	3	5510	-0.88	22.77	0.05
73	SLU 39	516	3	5419	-1.07	21.61	0.05
73	SLU 40	599	3	5699	-0.88	24.95	0.05
73	SLU 41	503	4	5448	-1.09	20.98	0.05
73	SLU 42	586	3	5728	-0.9	24.32	0.05
73	SLU 43	491	3	5167	-1.01	20.37	0.05
73	SLU 44	629	2	5632	-0.7	25.94	0.05
73	SLU 45	487	3	5228	-1.04	20.12	0.05
73	SLU 46	569	3	5507	-0.85	23.46	0.05
73	SLU 47	616	2	5661	-0.72	25.31	0.05
73	SLU 48	474	3	5256	-1.06	19.5	0.05
73	SLU 49	556	3	5536	-0.87	22.84	0.05
73	SLU 50	465	3	5224	-1.06	19.13	0.05
73	SLU 51	547	3	5503	-0.87	22.46	0.05
73	SLU 52	679	2	6208	-0.8	28.1	0.06
73	SLU 53	537	4	5803	-1.15	22.29	0.06
73	SLU 54	619	3	6082	-0.95	25.62	0.06
73	SLU 55	666	2	6236	-0.82	27.48	0.06
73	SLU 56	523	4	5831	-1.17	21.66	0.06
73	SLU 57	606	3	6111	-0.98	25	0.06
73	SLU 58	515	4	5799	-1.16	21.29	0.06
73	SLU 59	597	3	6079	-0.97	24.63	0.06
73	SLU 60	563	4	5988	-1.16	23.46	0.06
73	SLU 61	645	3	6268	-0.97	26.8	0.06
73	SLU 62	549	4	6017	-1.19	22.84	0.06
73	SLU 63	632	3	6297	-1	26.18	0.06
73	SLU 64	544	4	5660	-1.12	22.63	0.06
73	SLU 65	682	2	6126	-0.81	28.19	0.06
73	SLU 66	540	4	5721	-1.15	22.38	0.06
73	SLU 67	622	3	6000	-0.96	25.72	0.06
73	SLU 68	669	2	6154	-0.83	27.57	0.06
73	SLU 69	527	4	5749	-1.17	21.75	0.06
73	SLU 70	609	3	6029	-0.98	25.09	0.06
73	SLU 71	518	4	5717	-1.17	21.38	0.06
73	SLU 72	600	3	5996	-0.98	24.72	0.06
73	SLU 73	732	3	6701	-0.91	30.35	0.06
73	SLU 74	590	4	6296	-1.26	24.54	0.06
73	SLU 75	672	3	6576	-1.07	27.88	0.06
73	SLU 76	719	3	6730	-0.93	29.73	0.06
73	SLU 77	577	4	6325	-1.28	23.92	0.06
73	SLU 78	659	3	6604	-1.09	27.25	0.06
73	SLU 79	568	4	6292	-1.27	23.54	0.06
73	SLU 80	650	3	6572	-1.08	26.88	0.06
73	SLU 81	616	4	6482	-1.28	25.72	0.06
73	SLU 82	698	3	6761	-1.08	29.05	0.06
73	SLU 83	602	4	6510	-1.3	25.09	0.06
73	SLU 84	685	3	6790	-1.11	28.43	0.07
73	SLE RA 1	407	3	4245	-0.84	16.91	0.04
73	SLE RA 2	499	2	4556	-0.63	20.62	0.04
73	SLE RA 3	404	3	4286	-0.86	16.74	0.04
73	SLE RA 4	459	2	4472	-0.73	18.97	0.04
73	SLE RA 5	490	2	4575	-0.64	20.2	0.04
73	SLE RA 6	395	3	4305	-0.87	16.33	0.04
73	SLE RA 7	450	2	4491	-0.75	18.55	0.04
73	SLE RA 8	389	3	4283	-0.87	16.08	0.04
73	SLE RA 9	444	2	4470	-0.74	18.3	0.04
73	SLE RA 10	532	2	4939	-0.7	22.06	0.05
73	SLE RA 11	437	3	4669	-0.93	18.19	0.05
73	SLE RA 12	492	2	4856	-0.8	20.41	0.05
73	SLE RA 13	523	2	4958	-0.71	21.64	0.05
73	SLE RA 14	429	3	4688	-0.94	17.77	0.05
73	SLE RA 15	484	2	4875	-0.82	19.99	0.05
73	SLE RA 16	423	3	4667	-0.94	17.52	0.05
73	SLE RA 17	478	2	4853	-0.81	19.74	0.05
73	SLE RA 18	455	3	4793	-0.94	18.97	0.05
73	SLE RA 19	510	2	4980	-0.81	21.19	0.05
73	SLE RA 20	446	3	4812	-0.96	18.55	0.05
73	SLE RA 21	501	3	4999	-0.83	20.78	0.05
73	SLE FR 1	407	3	4245	-0.84	16.91	0.04
73	SLE FR 2	425	3	4307	-0.8	17.65	0.04
73	SLE FR 3	403	3	4253	-0.85	16.74	0.04
73	SLE FR 4	440	3	4472	-0.83	18.27	0.04
73	SLE FR 5	418	3	4417	-0.88	17.36	0.04
73	SLE FR 6	431	3	4519	-0.89	17.94	0.04
73	SLE QP 1	407	3	4245	-0.84	16.91	0.04
73	SLE QP 2	421	3	4410	-0.87	17.53	0.04
73	SLD 1	1387	9	5016	-2.94	60.04	0.06
73	SLD 2	1387	9	5016	-2.94	60.04	0.06
73	SLD 3	1181	5	4424	-1.43	52.03	0.04
73	SLD 4	1181	5	4424	-1.43	52.03	0.04
73	SLD 5	1024	12	5488	-3.79	42.43	0.07
73	SLD 6	1024	12	5488	-3.79	42.43	0.07
73	SLD 7	336	-4	3517	1.26	15.73	0.02
73	SLD 8	336	-4	3517	1.26	15.73	0.02

Nodo	Cont.	Reazione a traslazione			Reazione a rotazione		
Ind.	N.br.	x	y	z	x	y	z
73	SLD 9	506	9	5302	-3	19.32	0.07
73	SLD 10	506	9	5302	-3	19.32	0.07
73	SLD 11	-181	-6	3331	2.04	-7.37	0.01
73	SLD 12	-181	-6	3331	2.04	-7.37	0.01
73	SLD 13	-338	1	4395	-0.31	-16.97	0.04
73	SLD 14	-338	1	4395	-0.31	-16.97	0.04
73	SLD 15	-544	-4	3804	1.2	-24.98	0.03
73	SLD 16	-544	-4	3804	1.2	-24.98	0.03
73	SLV 1	2688	18	5855	-5.8	117.3	0.08
73	SLV 2	2688	18	5855	-5.8	117.3	0.08
73	SLV 3	2190	7	4436	-2.12	97.93	0.04
73	SLV 4	2190	7	4436	-2.12	97.93	0.04
73	SLV 5	1857	25	6996	-7.94	76.83	0.11
73	SLV 6	1857	25	6996	-7.94	76.83	0.11
73	SLV 7	196	-14	2265	4.34	12.27	-0.01
73	SLV 8	196	-14	2265	4.34	12.27	-0.01
73	SLV 9	646	19	6554	-6.08	22.78	0.1
73	SLV 10	646	19	6554	-6.08	22.78	0.1
73	SLV 11	-1014	-19	1823	6.19	-41.78	-0.03
73	SLV 12	-1014	-19	1823	6.19	-41.78	-0.03
73	SLV 13	-1348	-1	4384	0.38	-62.87	0.04
73	SLV 14	-1348	-1	4384	0.38	-62.87	0.04
73	SLV 15	-1846	-13	2964	4.06	-82.24	0.01
73	SLV 16	-1846	-13	2964	4.06	-82.24	0.01
74	SLU 1	175	742	5948	-24.35	8.31	-0.01
74	SLU 2	259	886	6718	-30.63	11.82	-0.02
74	SLU 3	164	761	6050	-25.17	7.85	-0.01
74	SLU 4	215	848	6512	-28.94	9.96	-0.02
74	SLU 5	242	898	6770	-31.19	11.09	-0.02
74	SLU 6	148	774	6102	-25.72	7.11	-0.01
74	SLU 7	198	860	6564	-29.49	9.22	-0.01
74	SLU 8	142	766	6052	-25.46	6.84	-0.01
74	SLU 9	192	853	6514	-29.23	8.95	-0.01
74	SLU 10	285	988	7536	-34.08	13.07	-0.02
74	SLU 11	191	863	6868	-28.62	9.09	-0.01
74	SLU 12	241	950	7330	-32.39	11.2	-0.02
74	SLU 13	268	1000	7587	-34.63	12.34	-0.02
74	SLU 14	174	875	6919	-29.17	8.36	-0.01
74	SLU 15	224	962	7381	-32.94	10.47	-0.02
74	SLU 16	168	868	6869	-28.91	8.09	-0.01
74	SLU 17	218	954	7331	-32.68	10.2	-0.02
74	SLU 18	212	887	7116	-29.28	10.08	-0.02
74	SLU 19	263	974	7578	-33.04	12.19	-0.02
74	SLU 20	196	899	7168	-29.83	9.35	-0.01
74	SLU 21	246	986	7630	-33.6	11.46	-0.02
74	SLU 22	203	838	6665	-27.71	9.62	-0.01
74	SLU 23	287	982	7435	-34	13.13	-0.02
74	SLU 24	192	858	6767	-28.53	9.15	-0.01
74	SLU 25	243	944	7229	-32.3	11.26	-0.02
74	SLU 26	270	994	7487	-34.55	12.4	-0.02
74	SLU 27	176	870	6819	-29.09	8.42	-0.01
74	SLU 28	226	956	7281	-32.86	10.53	-0.02
74	SLU 29	170	862	6769	-28.83	8.15	-0.01
74	SLU 30	220	949	7230	-32.6	10.26	-0.02
74	SLU 31	313	1084	8252	-37.44	14.38	-0.02
74	SLU 32	219	959	7585	-31.98	10.4	-0.02
74	SLU 33	269	1046	8046	-35.75	12.51	-0.02
74	SLU 34	296	1096	8304	-38	13.64	-0.02
74	SLU 35	202	971	7636	-32.54	9.66	-0.01
74	SLU 36	252	1058	8098	-36.31	11.77	-0.02
74	SLU 37	196	964	7586	-32.28	9.39	-0.01
74	SLU 38	246	1050	8048	-36.04	11.5	-0.02
74	SLU 39	240	983	7833	-32.64	11.39	-0.02
74	SLU 40	291	1070	8295	-36.41	13.5	-0.02
74	SLU 41	224	995	7885	-33.2	10.66	-0.02
74	SLU 42	274	1082	8347	-36.97	12.77	-0.02
74	SLU 43	218	931	7487	-30.5	10.35	-0.02
74	SLU 44	301	1076	8257	-36.78	13.87	-0.02
74	SLU 45	207	951	7589	-31.32	9.89	-0.01
74	SLU 46	257	1038	8051	-35.09	12	-0.02
74	SLU 47	285	1088	8308	-37.34	13.14	-0.02
74	SLU 48	191	963	7641	-31.87	9.16	-0.01
74	SLU 49	241	1050	8103	-35.64	11.27	-0.02
74	SLU 50	185	955	7590	-31.61	8.89	-0.01
74	SLU 51	235	1042	8052	-35.38	11	-0.02
74	SLU 52	328	1177	9074	-40.23	15.11	-0.02
74	SLU 53	234	1053	8406	-34.77	11.13	-0.02
74	SLU 54	284	1139	8868	-38.54	13.24	-0.02
74	SLU 55	311	1189	9126	-40.78	14.38	-0.02
74	SLU 56	217	1065	8458	-35.32	10.4	-0.02
74	SLU 57	267	1151	8920	-39.09	12.51	-0.02
74	SLU 58	211	1057	8408	-35.06	10.13	-0.02
74	SLU 59	261	1144	8870	-38.83	12.24	-0.02
74	SLU 60	255	1076	8655	-35.43	12.13	-0.02
74	SLU 61	305	1163	9117	-39.19	14.24	-0.02
74	SLU 62	239	1089	8706	-35.98	11.39	-0.02
74	SLU 63	289	1175	9168	-39.75	13.5	-0.02
74	SLU 64	246	1027	8204	-33.87	11.66	-0.02
74	SLU 65	329	1172	8973	-40.15	15.18	-0.02
74	SLU 66	235	1047	8306	-34.68	11.2	-0.02

Nodo	Cont.	Reazione a traslazione			Reazione a rotazione		
Ind.	N.br.	x	y	z	x	y	z
74	SLU 67	285	1134	8768	-38.45	13.31	-0.02
74	SLU 68	313	1184	9025	-40.7	14.44	-0.02
74	SLU 69	219	1059	8357	-35.24	10.47	-0.02
74	SLU 70	269	1146	8819	-39.01	12.58	-0.02
74	SLU 71	213	1051	8307	-34.98	10.19	-0.02
74	SLU 72	263	1138	8769	-38.75	12.31	-0.02
74	SLU 73	356	1273	9791	-43.6	16.42	-0.03
74	SLU 74	262	1149	9123	-38.13	12.44	-0.02
74	SLU 75	312	1235	9585	-41.9	14.55	-0.02
74	SLU 76	339	1286	9843	-44.15	15.69	-0.02
74	SLU 77	245	1161	9175	-38.69	11.71	-0.02
74	SLU 78	295	1248	9637	-42.46	13.82	-0.02
74	SLU 79	239	1153	9125	-38.43	11.44	-0.02
74	SLU 80	289	1240	9587	-42.19	13.55	-0.02
74	SLU 81	283	1173	9371	-38.79	13.43	-0.02
74	SLU 82	333	1259	9833	-42.56	15.55	-0.02
74	SLU 83	267	1185	9423	-39.35	12.7	-0.02
74	SLU 84	317	1271	9885	-43.12	14.81	-0.02
74	SLE RA 1	183	769	6153	-25.31	8.68	-0.01
74	SLE RA 2	239	865	6666	-29.5	11.03	-0.02
74	SLE RA 3	176	782	6221	-25.86	8.37	-0.01
74	SLE RA 4	209	840	6529	-28.37	9.78	-0.02
74	SLE RA 5	228	873	6701	-29.87	10.54	-0.02
74	SLE RA 6	165	790	6255	-26.23	7.88	-0.01
74	SLE RA 7	198	848	6563	-28.74	9.29	-0.01
74	SLE RA 8	161	785	6222	-26.05	7.7	-0.01
74	SLE RA 9	194	843	6530	-28.56	9.11	-0.01
74	SLE RA 10	256	933	7211	-31.8	11.85	-0.02
74	SLE RA 11	193	850	6766	-28.16	9.2	-0.01
74	SLE RA 12	227	908	7074	-30.67	10.61	-0.02
74	SLE RA 13	245	941	7246	-32.17	11.37	-0.02
74	SLE RA 14	182	858	6800	-28.53	8.71	-0.01
74	SLE RA 15	216	916	7108	-31.04	10.12	-0.02
74	SLE RA 16	178	853	6767	-28.35	8.53	-0.01
74	SLE RA 17	212	911	7075	-30.86	9.94	-0.02
74	SLE RA 18	208	866	6931	-28.59	9.86	-0.01
74	SLE RA 19	241	924	7239	-31.11	11.27	-0.02
74	SLE RA 20	197	874	6966	-28.97	9.38	-0.01
74	SLE RA 21	230	932	7274	-31.48	10.78	-0.02
74	SLE FR 1	183	769	6153	-25.31	8.68	-0.01
74	SLE FR 2	194	788	6256	-26.15	9.15	-0.01
74	SLE FR 3	179	772	6167	-25.46	8.49	-0.01
74	SLE FR 4	202	817	6489	-27.13	9.51	-0.01
74	SLE FR 5	186	801	6400	-26.44	8.84	-0.01
74	SLE FR 6	196	817	6542	-26.95	9.27	-0.01
74	SLE QP 1	183	769	6153	-25.31	8.68	-0.01
74	SLE QP 2	191	798	6386	-26.3	9.04	-0.01
74	SLD 1	1099	1022	7379	-35.94	49.33	-0.07
74	SLD 2	1099	1022	7379	-35.94	49.33	-0.07
74	SLD 3	993	765	6267	-24.98	44.74	-0.06
74	SLD 4	993	765	6267	-24.98	44.74	-0.06
74	SLD 5	623	1254	8371	-45.81	28.08	-0.04
74	SLD 6	623	1254	8371	-45.81	28.08	-0.04
74	SLD 7	271	399	4664	-9.28	12.79	-0.02
74	SLD 8	271	399	4664	-9.28	12.79	-0.02
74	SLD 9	110	1197	8109	-43.31	5.28	-0.01
74	SLD 10	110	1197	8109	-43.31	5.28	-0.01
74	SLD 11	-242	342	4402	-6.78	-10	0.01
74	SLD 12	-242	342	4402	-6.78	-10	0.01
74	SLD 13	-612	831	6506	-27.61	-26.67	0.03
74	SLD 14	-612	831	6506	-27.61	-26.67	0.03
74	SLD 15	-718	574	5394	-16.65	-31.25	0.04
74	SLD 16	-718	574	5394	-16.65	-31.25	0.04
74	SLV 1	2321	1335	8769	-49.4	103.54	-0.14
74	SLV 2	2321	1335	8769	-49.4	103.54	-0.14
74	SLV 3	2063	719	6092	-23.12	92.32	-0.12
74	SLV 4	2063	719	6092	-23.12	92.32	-0.12
74	SLV 5	1221	1893	11161	-73.09	54.42	-0.08
74	SLV 6	1221	1893	11161	-73.09	54.42	-0.08
74	SLV 7	361	-159	2238	14.52	16.99	-0.02
74	SLV 8	361	-159	2238	14.52	16.99	-0.02
74	SLV 9	20	1756	10535	-67.11	1.08	-0.01
74	SLV 10	20	1756	10535	-67.11	1.08	-0.01
74	SLV 11	-840	-297	1612	20.5	-36.35	0.05
74	SLV 12	-840	-297	1612	20.5	-36.35	0.05
74	SLV 13	-1682	877	6681	-29.48	-74.24	0.1
74	SLV 14	-1682	877	6681	-29.48	-74.24	0.1
74	SLV 15	-1940	262	4004	-3.19	-85.47	0.12
74	SLV 16	-1940	262	4004	-3.19	-85.47	0.12
75	SLU 1	-103	10	3752	-6.09	-2.48	-0.04
75	SLU 2	-81	10	4216	-8.29	-0.98	-0.05
75	SLU 3	-121	10	3810	-6.24	-3.23	-0.04
75	SLU 4	-108	10	4088	-7.56	-2.32	-0.05
75	SLU 5	-102	10	4245	-8.37	-1.85	-0.05
75	SLU 6	-141	10	3839	-6.32	-4.1	-0.04
75	SLU 7	-128	10	4117	-7.64	-3.2	-0.05
75	SLU 8	-143	10	3809	-6.25	-4.22	-0.04
75	SLU 9	-130	10	4088	-7.57	-3.32	-0.05
75	SLU 10	-89	11	4733	-9.12	-1.03	-0.06
75	SLU 11	-128	11	4327	-7.07	-3.28	-0.05

Nodo	Cont.	Reazione a traslazione			Reazione a rotazione		
Ind.	N.br.	x	y	z	x	y	z
75	SLU 12	-115	11	4605	-8.39	-2.38	-0.05
75	SLU 13	-109	11	4762	-9.2	-1.9	-0.06
75	SLU 14	-148	11	4356	-7.15	-4.15	-0.05
75	SLU 15	-135	11	4634	-8.47	-3.25	-0.06
75	SLU 16	-150	11	4326	-7.08	-4.27	-0.05
75	SLU 17	-138	11	4605	-8.4	-3.37	-0.06
75	SLU 18	-113	11	4491	-7.28	-2.55	-0.05
75	SLU 19	-100	11	4769	-8.6	-1.65	-0.06
75	SLU 20	-133	12	4519	-7.36	-3.42	-0.05
75	SLU 21	-121	12	4798	-8.68	-2.52	-0.06
75	SLU 22	-109	11	4197	-6.87	-2.48	-0.05
75	SLU 23	-87	11	4661	-9.07	-0.98	-0.06
75	SLU 24	-127	11	4255	-7.02	-3.23	-0.05
75	SLU 25	-114	11	4533	-8.34	-2.33	-0.05
75	SLU 26	-108	11	4690	-9.15	-1.85	-0.06
75	SLU 27	-147	11	4284	-7.1	-4.1	-0.05
75	SLU 28	-134	11	4562	-8.42	-3.2	-0.06
75	SLU 29	-149	11	4255	-7.03	-4.22	-0.05
75	SLU 30	-136	11	4533	-8.35	-3.32	-0.05
75	SLU 31	-95	12	5178	-9.9	-1.03	-0.06
75	SLU 32	-134	12	4772	-7.85	-3.28	-0.05
75	SLU 33	-121	12	5050	-9.17	-2.38	-0.06
75	SLU 34	-115	12	5207	-9.98	-1.9	-0.06
75	SLU 35	-154	13	4801	-7.93	-4.15	-0.05
75	SLU 36	-141	13	5079	-9.25	-3.25	-0.06
75	SLU 37	-156	12	4772	-7.86	-4.27	-0.05
75	SLU 38	-144	12	5050	-9.18	-3.37	-0.06
75	SLU 39	-119	13	4936	-8.06	-2.55	-0.05
75	SLU 40	-106	13	5214	-9.38	-1.65	-0.06
75	SLU 41	-139	13	4964	-8.14	-3.42	-0.06
75	SLU 42	-127	13	5243	-9.46	-2.52	-0.06
75	SLU 43	-131	12	4725	-7.65	-3.22	-0.05
75	SLU 44	-110	12	5189	-9.85	-1.72	-0.06
75	SLU 45	-149	12	4783	-7.8	-3.97	-0.05
75	SLU 46	-137	12	5061	-9.12	-3.07	-0.06
75	SLU 47	-130	12	5218	-9.93	-2.59	-0.06
75	SLU 48	-169	12	4812	-7.88	-4.84	-0.05
75	SLU 49	-157	12	5090	-9.2	-3.94	-0.06
75	SLU 50	-172	12	4782	-7.81	-4.96	-0.05
75	SLU 51	-159	12	5061	-9.13	-4.06	-0.06
75	SLU 52	-118	13	5706	-10.68	-1.77	-0.07
75	SLU 53	-157	14	5300	-8.63	-4.02	-0.06
75	SLU 54	-144	14	5578	-9.95	-3.12	-0.07
75	SLU 55	-138	13	5735	-10.76	-2.64	-0.07
75	SLU 56	-177	14	5329	-8.71	-4.89	-0.06
75	SLU 57	-164	14	5607	-10.03	-3.99	-0.07
75	SLU 58	-179	14	5299	-8.64	-5.01	-0.06
75	SLU 59	-166	14	5578	-9.96	-4.11	-0.07
75	SLU 60	-142	14	5464	-8.84	-3.29	-0.06
75	SLU 61	-129	14	5742	-10.16	-2.39	-0.07
75	SLU 62	-162	14	5492	-8.92	-4.16	-0.06
75	SLU 63	-149	14	5771	-10.24	-3.26	-0.07
75	SLU 64	-137	13	5170	-8.43	-3.22	-0.06
75	SLU 65	-116	13	5634	-10.63	-1.72	-0.07
75	SLU 66	-155	14	5228	-8.58	-3.97	-0.06
75	SLU 67	-143	14	5506	-9.9	-3.07	-0.07
75	SLU 68	-136	13	5663	-10.71	-2.59	-0.07
75	SLU 69	-176	14	5257	-8.66	-4.84	-0.06
75	SLU 70	-163	14	5535	-9.98	-3.94	-0.07
75	SLU 71	-178	14	5228	-8.59	-4.97	-0.06
75	SLU 72	-165	14	5506	-9.91	-4.07	-0.07
75	SLU 73	-124	15	6151	-11.46	-1.77	-0.07
75	SLU 74	-163	15	5745	-9.41	-4.02	-0.06
75	SLU 75	-150	15	6023	-10.73	-3.12	-0.07
75	SLU 76	-144	15	6180	-11.54	-2.64	-0.08
75	SLU 77	-183	15	5774	-9.49	-4.89	-0.06
75	SLU 78	-170	15	6052	-10.81	-3.99	-0.07
75	SLU 79	-185	15	5745	-9.42	-5.02	-0.06
75	SLU 80	-172	15	6023	-10.74	-4.12	-0.07
75	SLU 81	-148	15	5909	-9.62	-3.3	-0.07
75	SLU 82	-135	15	6187	-10.94	-2.4	-0.07
75	SLU 83	-168	15	5937	-9.7	-4.17	-0.07
75	SLU 84	-155	15	6216	-11.02	-3.27	-0.07
75	SLE RA 1	-104	10	3879	-6.32	-2.48	-0.04
75	SLE RA 2	-90	10	4189	-7.78	-1.48	-0.05
75	SLE RA 3	-116	10	3918	-6.42	-2.98	-0.04
75	SLE RA 4	-108	10	4103	-7.3	-2.38	-0.05
75	SLE RA 5	-104	10	4208	-7.83	-2.06	-0.05
75	SLE RA 6	-130	10	3937	-6.47	-3.56	-0.04
75	SLE RA 7	-121	10	4123	-7.35	-2.96	-0.05
75	SLE RA 8	-131	10	3918	-6.42	-3.64	-0.04
75	SLE RA 9	-123	10	4103	-7.3	-3.04	-0.05
75	SLE RA 10	-95	11	4533	-8.33	-1.51	-0.05
75	SLE RA 11	-121	11	4263	-6.97	-3.01	-0.05
75	SLE RA 12	-113	11	4448	-7.85	-2.41	-0.05
75	SLE RA 13	-109	11	4552	-8.39	-2.09	-0.05
75	SLE RA 14	-135	11	4282	-7.02	-3.59	-0.05
75	SLE RA 15	-126	11	4467	-7.9	-2.99	-0.05
75	SLE RA 16	-136	11	4262	-6.97	-3.67	-0.05
75	SLE RA 17	-128	11	4448	-7.85	-3.07	-0.05

Nodo	Cont.	Reazione a traslazione			Reazione a rotazione		
Ind.	N.br.	x	y	z	x	y	z
75	SLE RA 18	-111	11	4372	-7.11	-2.53	-0.05
75	SLE RA 19	-103	11	4557	-7.99	-1.93	-0.05
75	SLE RA 20	-125	11	4391	-7.16	-3.11	-0.05
75	SLE RA 21	-116	11	4576	-8.04	-2.51	-0.05
75	SLE FR 1	-104	10	3879	-6.32	-2.48	-0.04
75	SLE FR 2	-102	10	3941	-6.61	-2.28	-0.04
75	SLE FR 3	-110	10	3887	-6.34	-2.71	-0.04
75	SLE FR 4	-104	10	4089	-6.85	-2.29	-0.05
75	SLE FR 5	-112	10	4035	-6.57	-2.73	-0.04
75	SLE FR 6	-108	11	4125	-6.71	-2.5	-0.05
75	SLE QP 1	-104	10	3879	-6.32	-2.48	-0.04
75	SLE QP 2	-107	10	4027	-6.55	-2.49	-0.04
75	SLD 1	665	15	4560	-6.97	32.58	-0.06
75	SLD 2	665	15	4560	-6.97	32.58	-0.06
75	SLD 3	780	12	3948	-3.45	37.22	-0.04
75	SLD 4	780	12	3948	-3.45	37.22	-0.04
75	SLD 5	-51	17	5114	-12.02	0.99	-0.08
75	SLD 6	-51	17	5114	-12.02	0.99	-0.08
75	SLD 7	335	5	3076	-0.28	16.46	-0.02
75	SLD 8	335	5	3076	-0.28	16.46	-0.02
75	SLD 9	-548	15	4978	-12.83	-21.45	-0.07
75	SLD 10	-548	15	4978	-12.83	-21.45	-0.07
75	SLD 11	-163	4	2940	-1.08	-5.98	-0.01
75	SLD 12	-163	4	2940	-1.08	-5.98	-0.01
75	SLD 13	-993	9	4106	-9.66	-42.2	-0.05
75	SLD 14	-993	9	4106	-9.66	-42.2	-0.05
75	SLD 15	-878	6	3494	-6.14	-37.56	-0.03
75	SLD 16	-878	6	3494	-6.14	-37.56	-0.03
75	SLV 1	1690	22	5309	-7.69	79.22	-0.08
75	SLV 2	1690	22	5309	-7.69	79.22	-0.08
75	SLV 3	1976	13	3835	0.96	90.76	-0.04
75	SLV 4	1976	13	3835	0.96	90.76	-0.04
75	SLV 5	-2	27	6648	-20.02	4.53	-0.12
75	SLV 6	-2	27	6648	-20.02	4.53	-0.12
75	SLV 7	953	-2	1733	8.83	42.98	0.02
75	SLV 8	953	-2	1733	8.83	42.98	0.02
75	SLV 9	-1166	22	6321	-21.93	-47.96	-0.11
75	SLV 10	-1166	22	6321	-21.93	-47.96	-0.11
75	SLV 11	-211	-6	1406	6.91	-9.51	0.03
75	SLV 12	-211	-6	1406	6.91	-9.51	0.03
75	SLV 13	-2189	7	4219	-14.07	-95.74	-0.05
75	SLV 14	-2189	7	4219	-14.07	-95.74	-0.05
75	SLV 15	-1903	-1	2745	-5.41	-84.21	-0.01
75	SLV 16	-1903	-1	2745	-5.41	-84.21	-0.01
76	SLU 1	-150	10	3308	-8.96	-3.68	0.01
76	SLU 2	-141	10	3688	-13.14	-2.93	0.01
76	SLU 3	-168	10	3355	-9.18	-4.42	0.01
76	SLU 4	-163	10	3583	-11.68	-3.97	0.01
76	SLU 5	-161	10	3712	-13.24	-3.77	0.01
76	SLU 6	-188	10	3379	-9.27	-5.26	0.01
76	SLU 7	-183	10	3607	-11.78	-4.81	0.01
76	SLU 8	-189	10	3355	-9.16	-5.36	0.01
76	SLU 9	-184	10	3583	-11.67	-4.91	0.01
76	SLU 10	-154	11	4147	-14.37	-3.11	0.01
76	SLU 11	-182	11	3814	-10.41	-4.6	0.01
76	SLU 12	-176	12	4042	-12.91	-4.15	0.01
76	SLU 13	-174	11	4171	-14.47	-3.95	0.01
76	SLU 14	-201	12	3838	-10.51	-5.44	0.01
76	SLU 15	-196	12	4066	-13.01	-4.99	0.01
76	SLU 16	-203	11	3814	-10.39	-5.55	0.01
76	SLU 17	-197	12	4042	-12.9	-5.1	0.01
76	SLU 18	-169	12	3963	-10.72	-3.95	0.01
76	SLU 19	-164	12	4191	-13.23	-3.5	0.01
76	SLU 20	-189	12	3987	-10.82	-4.79	0.01
76	SLU 21	-183	12	4215	-13.33	-4.34	0.01
76	SLU 22	-162	11	3697	-10.11	-3.82	0.01
76	SLU 23	-153	11	4077	-14.29	-3.07	0.01
76	SLU 24	-180	11	3745	-10.32	-4.56	0.01
76	SLU 25	-175	11	3973	-12.83	-4.11	0.01
76	SLU 26	-173	11	4101	-14.39	-3.91	0.01
76	SLU 27	-200	11	3769	-10.42	-5.4	0.01
76	SLU 28	-194	12	3997	-12.93	-4.95	0.01
76	SLU 29	-201	11	3745	-10.31	-5.5	0.01
76	SLU 30	-196	11	3973	-12.82	-5.05	0.01
76	SLU 31	-166	13	4536	-15.52	-3.26	0.01
76	SLU 32	-193	13	4204	-11.55	-4.75	0.01
76	SLU 33	-188	13	4432	-14.06	-4.3	0.01
76	SLU 34	-186	13	4560	-15.62	-4.1	0.01
76	SLU 35	-213	13	4228	-11.65	-5.59	0.01
76	SLU 36	-208	13	4456	-14.16	-5.14	0.01
76	SLU 37	-215	13	4204	-11.54	-5.69	0.01
76	SLU 38	-209	13	4432	-14.05	-5.24	0.01
76	SLU 39	-181	13	4353	-11.87	-4.09	0.01
76	SLU 40	-175	13	4581	-14.38	-3.64	0.01
76	SLU 41	-201	13	4377	-11.97	-4.93	0.01
76	SLU 42	-195	13	4605	-14.48	-4.48	0.01
76	SLU 43	-191	12	4166	-11.26	-4.73	0.01
76	SLU 44	-182	12	4547	-15.44	-3.98	0.01
76	SLU 45	-209	13	4214	-11.47	-5.47	0.01
76	SLU 46	-204	13	4442	-13.98	-5.02	0.01

Nodo	Cont.	Reazione a traslazione			Reazione a rotazione		
Ind.	N.br.	x	y	z	x	y	z
76	SLU 47	-202	13	4570	-15.54	-4.82	0.01
76	SLU 48	-229	13	4238	-11.57	-6.31	0.01
76	SLU 49	-224	13	4466	-14.08	-5.86	0.01
76	SLU 50	-230	13	4214	-11.46	-6.41	0.01
76	SLU 51	-225	13	4442	-13.97	-5.96	0.01
76	SLU 52	-195	14	5005	-16.67	-4.17	0.01
76	SLU 53	-223	14	4673	-12.7	-5.66	0.01
76	SLU 54	-217	14	4901	-15.21	-5.21	0.01
76	SLU 55	-215	14	5029	-16.77	-5.01	0.01
76	SLU 56	-242	14	4697	-12.8	-6.5	0.01
76	SLU 57	-237	14	4925	-15.31	-6.05	0.01
76	SLU 58	-244	14	4673	-12.69	-6.6	0.01
76	SLU 59	-238	14	4901	-15.2	-6.15	0.01
76	SLU 60	-210	14	4822	-13.02	-5	0.01
76	SLU 61	-205	14	5050	-15.52	-4.55	0.01
76	SLU 62	-230	14	4846	-13.12	-5.84	0.01
76	SLU 63	-224	15	5074	-15.62	-5.39	0.01
76	SLU 64	-203	14	4556	-12.41	-4.88	0.01
76	SLU 65	-194	14	4936	-16.59	-4.13	0.01
76	SLU 66	-221	14	4604	-12.62	-5.62	0.01
76	SLU 67	-216	14	4832	-15.13	-5.16	0.01
76	SLU 68	-214	14	4960	-16.69	-4.97	0.01
76	SLU 69	-241	14	4627	-12.72	-6.46	0.01
76	SLU 70	-235	14	4855	-15.23	-6	0.01
76	SLU 71	-242	14	4604	-12.61	-6.56	0.01
76	SLU 72	-237	14	4832	-15.11	-6.11	0.01
76	SLU 73	-207	15	5395	-17.82	-4.31	0.02
76	SLU 74	-234	15	5062	-13.85	-5.8	0.01
76	SLU 75	-229	15	5291	-16.36	-5.35	0.01
76	SLU 76	-227	15	5419	-17.92	-5.15	0.02
76	SLU 77	-254	15	5086	-13.95	-6.64	0.01
76	SLU 78	-249	15	5314	-16.46	-6.19	0.01
76	SLU 79	-255	15	5063	-13.84	-6.75	0.01
76	SLU 80	-250	15	5291	-16.34	-6.29	0.01
76	SLU 81	-222	16	5212	-14.17	-5.15	0.01
76	SLU 82	-216	16	5440	-16.67	-4.7	0.01
76	SLU 83	-241	16	5235	-14.27	-5.99	0.01
76	SLU 84	-236	16	5463	-16.77	-5.54	0.01
76	SLE RA 1	-153	10	3419	-9.29	-3.72	0.01
76	SLE RA 2	-147	10	3672	-12.08	-3.22	0.01
76	SLE RA 3	-166	10	3451	-9.43	-4.21	0.01
76	SLE RA 4	-162	10	3603	-11.1	-3.91	0.01
76	SLE RA 5	-161	10	3688	-12.14	-3.78	0.01
76	SLE RA 6	-179	10	3467	-9.5	-4.77	0.01
76	SLE RA 7	-175	10	3619	-11.17	-4.47	0.01
76	SLE RA 8	-180	10	3451	-9.42	-4.84	0.01
76	SLE RA 9	-176	10	3603	-11.1	-4.54	0.01
76	SLE RA 10	-156	11	3978	-12.9	-3.34	0.01
76	SLE RA 11	-174	11	3757	-10.25	-4.34	0.01
76	SLE RA 12	-171	11	3909	-11.92	-4.04	0.01
76	SLE RA 13	-169	11	3994	-12.96	-3.9	0.01
76	SLE RA 14	-188	11	3772	-10.32	-4.9	0.01
76	SLE RA 15	-184	11	3925	-11.99	-4.6	0.01
76	SLE RA 16	-189	11	3757	-10.25	-4.97	0.01
76	SLE RA 17	-185	11	3909	-11.92	-4.66	0.01
76	SLE RA 18	-166	12	3856	-10.46	-3.9	0.01
76	SLE RA 19	-163	12	4008	-12.14	-3.6	0.01
76	SLE RA 20	-179	12	3872	-10.53	-4.46	0.01
76	SLE RA 21	-176	12	4024	-12.2	-4.16	0.01
76	SLE FR 1	-153	10	3419	-9.29	-3.72	0.01
76	SLE FR 2	-152	10	3470	-9.85	-3.62	0.01
76	SLE FR 3	-159	10	3425	-9.32	-3.94	0.01
76	SLE FR 4	-156	11	3601	-10.2	-3.67	0.01
76	SLE FR 5	-163	11	3556	-9.67	-4	0.01
76	SLE FR 6	-160	11	3638	-9.88	-3.81	0.01
76	SLE QP 1	-153	10	3419	-9.29	-3.72	0.01
76	SLE QP 2	-157	11	3550	-9.64	-3.77	0.01
76	SLD 1	588	9	3592	-10.49	29.89	0.02
76	SLD 2	588	9	3592	-10.49	29.89	0.02
76	SLD 3	715	6	3147	-3.46	35.02	0.01
76	SLD 4	715	6	3147	-3.46	35.02	0.01
76	SLD 5	-125	15	4237	-20.55	-1.45	0.02
76	SLD 6	-125	15	4237	-20.55	-1.45	0.02
76	SLD 7	296	5	2755	2.86	15.64	0
76	SLD 8	296	5	2755	2.86	15.64	0
76	SLD 9	-610	17	4346	-22.15	-23.19	0.02
76	SLD 10	-610	17	4346	-22.15	-23.19	0.02
76	SLD 11	-189	7	2863	1.26	-6.1	0
76	SLD 12	-189	7	2863	1.26	-6.1	0
76	SLD 13	-1029	16	3953	-15.82	-42.57	0
76	SLD 14	-1029	16	3953	-15.82	-42.57	0
76	SLD 15	-903	12	3508	-8.8	-37.44	0
76	SLD 16	-903	12	3508	-8.8	-37.44	0
76	SLV 1	1579	6	3654	-12.01	74.63	0.03
76	SLV 2	1579	6	3654	-12.01	74.63	0.03
76	SLV 3	1891	-1	2581	5.39	87.35	0.02
76	SLV 4	1891	-1	2581	5.39	87.35	0.02
76	SLV 5	-110	20	5209	-36.74	0.47	0.04
76	SLV 6	-110	20	5209	-36.74	0.47	0.04
76	SLV 7	931	-4	1631	21.26	42.84	-0.01

Nodo	Cont.	Reazione a traslazione			Reazione a rotazione		
Ind.	N.br.	x	y	z	x	y	z
76	SLV 8	931	-4	1631	21.26	42.84	-0.01
76	SLV 9	-1246	25	5469	-40.55	-50.39	0.03
76	SLV 10	-1246	25	5469	-40.55	-50.39	0.03
76	SLV 11	-204	1	1891	17.46	-8.01	-0.02
76	SLV 12	-204	1	1891	17.46	-8.01	-0.02
76	SLV 13	-2206	22	4520	-24.68	-94.89	0
76	SLV 14	-2206	22	4520	-24.68	-94.89	0
76	SLV 15	-1893	15	3446	-7.28	-82.18	-0.02
76	SLV 16	-1893	15	3446	-7.28	-82.18	-0.02
77	SLU 1	-227	18	2973	-12.89	-9.64	-0.04
77	SLU 2	-232	21	3296	-19.85	-9.55	-0.05
77	SLU 3	-246	18	3014	-13.19	-10.51	-0.04
77	SLU 4	-249	20	3207	-17.37	-10.46	-0.04
77	SLU 5	-252	21	3317	-19.99	-10.45	-0.05
77	SLU 6	-266	18	3035	-13.33	-11.42	-0.04
77	SLU 7	-269	20	3228	-17.51	-11.36	-0.04
77	SLU 8	-267	18	3015	-13.17	-11.45	-0.04
77	SLU 9	-270	20	3209	-17.34	-11.39	-0.04
77	SLU 10	-257	24	3711	-21.62	-10.62	-0.05
77	SLU 11	-271	21	3429	-14.96	-11.59	-0.04
77	SLU 12	-274	23	3622	-19.14	-11.53	-0.05
77	SLU 13	-277	24	3732	-21.76	-11.52	-0.05
77	SLU 14	-291	21	3450	-15.1	-12.49	-0.04
77	SLU 15	-294	23	3644	-19.28	-12.43	-0.05
77	SLU 16	-292	21	3431	-14.94	-12.52	-0.04
77	SLU 17	-295	23	3624	-19.11	-12.46	-0.05
77	SLU 18	-262	21	3566	-15.42	-11.17	-0.05
77	SLU 19	-266	23	3760	-19.59	-11.12	-0.05
77	SLU 20	-282	21	3587	-15.55	-12.08	-0.05
77	SLU 21	-285	23	3781	-19.73	-12.02	-0.05
77	SLU 22	-249	20	3321	-14.54	-10.61	-0.04
77	SLU 23	-255	23	3644	-21.5	-10.51	-0.05
77	SLU 24	-269	20	3362	-14.84	-11.48	-0.04
77	SLU 25	-272	22	3555	-19.02	-11.42	-0.05
77	SLU 26	-274	24	3665	-21.64	-11.42	-0.05
77	SLU 27	-289	21	3383	-14.98	-12.38	-0.04
77	SLU 28	-292	23	3577	-19.16	-12.33	-0.05
77	SLU 29	-289	20	3364	-14.82	-12.41	-0.04
77	SLU 30	-292	22	3557	-19	-12.36	-0.05
77	SLU 31	-279	26	4059	-23.27	-11.59	-0.06
77	SLU 32	-294	23	3777	-16.61	-12.55	-0.05
77	SLU 33	-297	25	3971	-20.79	-12.5	-0.05
77	SLU 34	-299	26	4080	-23.41	-12.49	-0.06
77	SLU 35	-314	23	3798	-16.75	-13.46	-0.05
77	SLU 36	-317	25	3992	-20.93	-13.4	-0.05
77	SLU 37	-314	23	3779	-16.59	-13.49	-0.05
77	SLU 38	-317	25	3972	-20.76	-13.43	-0.05
77	SLU 39	-285	24	3914	-17.07	-12.14	-0.05
77	SLU 40	-288	26	4108	-21.25	-12.08	-0.06
77	SLU 41	-305	24	3936	-17.21	-13.04	-0.05
77	SLU 42	-308	26	4129	-21.38	-12.99	-0.06
77	SLU 43	-287	22	3745	-16.19	-12.2	-0.05
77	SLU 44	-292	26	4068	-23.15	-12.11	-0.05
77	SLU 45	-306	23	3786	-16.49	-13.07	-0.05
77	SLU 46	-310	25	3980	-20.67	-13.02	-0.05
77	SLU 47	-312	26	4089	-23.29	-13.01	-0.06
77	SLU 48	-326	23	3807	-16.63	-13.98	-0.05
77	SLU 49	-330	25	4001	-20.81	-13.92	-0.05
77	SLU 50	-327	23	3788	-16.47	-14.01	-0.05
77	SLU 51	-330	25	3981	-20.64	-13.95	-0.05
77	SLU 52	-317	28	4483	-24.92	-13.18	-0.06
77	SLU 53	-331	25	4201	-18.26	-14.15	-0.05
77	SLU 54	-335	27	4395	-22.44	-14.09	-0.06
77	SLU 55	-337	28	4504	-25.06	-14.08	-0.06
77	SLU 56	-351	25	4223	-18.4	-15.05	-0.05
77	SLU 57	-354	27	4416	-22.58	-14.99	-0.06
77	SLU 58	-352	25	4203	-18.24	-15.08	-0.05
77	SLU 59	-355	27	4397	-22.41	-15.02	-0.06
77	SLU 60	-323	26	4339	-18.72	-13.73	-0.06
77	SLU 61	-326	28	4532	-22.89	-13.68	-0.06
77	SLU 62	-343	26	4360	-18.86	-14.64	-0.06
77	SLU 63	-346	28	4553	-23.03	-14.58	-0.06
77	SLU 64	-310	24	4094	-17.84	-13.17	-0.05
77	SLU 65	-315	28	4416	-24.8	-13.07	-0.06
77	SLU 66	-329	25	4134	-18.14	-14.04	-0.05
77	SLU 67	-332	27	4328	-22.32	-13.99	-0.06
77	SLU 68	-335	28	4437	-24.94	-13.98	-0.06
77	SLU 69	-349	25	4155	-18.28	-14.94	-0.05
77	SLU 70	-352	27	4349	-22.46	-14.89	-0.06
77	SLU 71	-350	25	4136	-18.12	-14.97	-0.05
77	SLU 72	-353	27	4330	-22.3	-14.92	-0.06
77	SLU 73	-340	30	4832	-26.57	-14.15	-0.07
77	SLU 74	-354	27	4550	-19.91	-15.11	-0.06
77	SLU 75	-357	29	4743	-24.09	-15.06	-0.06
77	SLU 76	-360	31	4853	-26.71	-15.05	-0.07
77	SLU 77	-374	28	4571	-20.05	-16.02	-0.06
77	SLU 78	-377	30	4764	-24.23	-15.96	-0.06
77	SLU 79	-375	27	4551	-19.89	-16.05	-0.06
77	SLU 80	-378	29	4745	-24.06	-15.99	-0.06
77	SLU 81	-345	28	4687	-20.37	-14.7	-0.06

Nodo	Cont.	Reazione a traslazione			Reazione a rotazione		
Ind.	N.br.	x	y	z	x	y	z
77	SLU 82	-348	30	4880	-24.55	-14.65	-0.06
77	SLU 83	-365	28	4708	-20.51	-15.6	-0.06
77	SLU 84	-368	30	4902	-24.68	-15.55	-0.07
77	SLE RA 1	-233	18	3072	-13.36	-9.92	-0.04
77	SLE RA 2	-237	21	3287	-18	-9.85	-0.04
77	SLE RA 3	-246	19	3100	-13.56	-10.5	-0.04
77	SLE RA 4	-248	20	3229	-16.35	-10.46	-0.04
77	SLE RA 5	-250	21	3302	-18.09	-10.46	-0.04
77	SLE RA 6	-259	19	3114	-13.65	-11.1	-0.04
77	SLE RA 7	-262	20	3243	-16.44	-11.06	-0.04
77	SLE RA 8	-260	19	3101	-13.55	-11.12	-0.04
77	SLE RA 9	-262	20	3230	-16.33	-11.08	-0.04
77	SLE RA 10	-253	22	3564	-19.18	-10.57	-0.05
77	SLE RA 11	-263	20	3376	-14.74	-11.21	-0.04
77	SLE RA 12	-265	22	3505	-17.53	-11.18	-0.05
77	SLE RA 13	-267	22	3578	-19.27	-11.17	-0.05
77	SLE RA 14	-276	20	3390	-14.83	-11.82	-0.04
77	SLE RA 15	-278	22	3520	-17.62	-11.78	-0.05
77	SLE RA 16	-276	20	3378	-14.73	-11.84	-0.04
77	SLE RA 17	-279	22	3507	-17.51	-11.8	-0.05
77	SLE RA 18	-257	21	3468	-15.05	-10.94	-0.04
77	SLE RA 19	-259	22	3597	-17.83	-10.9	-0.05
77	SLE RA 20	-270	21	3482	-15.14	-11.54	-0.05
77	SLE RA 21	-272	22	3611	-17.92	-11.5	-0.05
77	SLE FR 1	-233	18	3072	-13.36	-9.92	-0.04
77	SLE FR 2	-234	19	3115	-14.29	-9.9	-0.04
77	SLE FR 3	-239	18	3078	-13.4	-10.16	-0.04
77	SLE FR 4	-241	20	3234	-14.79	-10.21	-0.04
77	SLE FR 5	-246	19	3197	-13.9	-10.46	-0.04
77	SLE FR 6	-245	20	3270	-14.2	-10.43	-0.04
77	SLE QP 1	-233	18	3072	-13.36	-9.92	-0.04
77	SLE QP 2	-240	19	3191	-13.87	-10.22	-0.04
77	SLD 1	493	19	3153	-15.49	23.69	-0.04
77	SLD 2	493	19	3153	-15.49	23.69	-0.04
77	SLD 3	630	11	2828	-3.71	29.43	-0.02
77	SLD 4	630	11	2828	-3.71	29.43	-0.02
77	SLD 5	-227	32	3674	-32.22	-8.75	-0.07
77	SLD 6	-227	32	3674	-32.22	-8.75	-0.07
77	SLD 7	227	4	2588	7.04	10.38	-0.01
77	SLD 8	227	4	2588	7.04	10.38	-0.01
77	SLD 9	-708	34	3794	-34.78	-30.83	-0.07
77	SLD 10	-708	34	3794	-34.78	-30.83	-0.07
77	SLD 11	-254	6	2709	4.49	-11.69	-0.01
77	SLD 12	-254	6	2709	4.49	-11.69	-0.01
77	SLD 13	-1110	27	3554	-24.02	-49.88	-0.06
77	SLD 14	-1110	27	3554	-24.02	-49.88	-0.06
77	SLD 15	-974	19	3229	-12.24	-44.14	-0.04
77	SLD 16	-974	19	3229	-12.24	-44.14	-0.04
77	SLV 1	1468	20	3108	-18.27	68.75	-0.04
77	SLV 2	1468	20	3108	-18.27	68.75	-0.04
77	SLV 3	1804	0	2324	11.01	82.94	0
77	SLV 4	1804	0	2324	11.01	82.94	0
77	SLV 5	-238	50	4356	-59.59	-8.05	-0.11
77	SLV 6	-238	50	4356	-59.59	-8.05	-0.11
77	SLV 7	883	-18	1741	38	39.25	0.04
77	SLV 8	883	-18	1741	38	39.25	0.04
77	SLV 9	-1364	56	4641	-65.73	-59.69	-0.12
77	SLV 10	-1364	56	4641	-65.73	-59.69	-0.12
77	SLV 11	-243	-12	2026	31.86	-12.39	0.02
77	SLV 12	-243	-12	2026	31.86	-12.39	0.02
77	SLV 13	-2285	38	4058	-38.74	-103.39	-0.09
77	SLV 14	-2285	38	4058	-38.74	-103.39	-0.09
77	SLV 15	-1948	18	3274	-9.46	-89.2	-0.04
77	SLV 16	-1948	18	3274	-9.46	-89.2	-0.04
78	SLU 1	-228	23	2678	-16.12	-7.8	-0.08
78	SLU 2	-249	30	2947	-25.98	-8.52	-0.11
78	SLU 3	-247	24	2713	-16.5	-8.61	-0.09
78	SLU 4	-259	28	2874	-22.42	-9.04	-0.1
78	SLU 5	-268	30	2966	-26.16	-9.38	-0.11
78	SLU 6	-266	24	2732	-16.68	-9.48	-0.09
78	SLU 7	-279	28	2894	-22.59	-9.9	-0.1
78	SLU 8	-267	24	2716	-16.47	-9.53	-0.09
78	SLU 9	-279	28	2878	-22.39	-9.96	-0.1
78	SLU 10	-276	33	3323	-28.19	-9.38	-0.12
78	SLU 11	-274	27	3089	-18.7	-9.47	-0.1
78	SLU 12	-286	31	3251	-24.62	-9.9	-0.11
78	SLU 13	-295	34	3342	-28.36	-10.24	-0.12
78	SLU 14	-293	27	3109	-18.88	-10.34	-0.1
78	SLU 15	-306	31	3270	-24.79	-10.77	-0.11
78	SLU 16	-293	27	3093	-18.67	-10.39	-0.1
78	SLU 17	-306	31	3254	-24.59	-10.82	-0.11
78	SLU 18	-266	28	3216	-19.26	-9.04	-0.1
78	SLU 19	-279	32	3377	-25.18	-9.47	-0.11
78	SLU 20	-286	28	3235	-19.44	-9.9	-0.1
78	SLU 21	-298	32	3396	-25.36	-10.33	-0.12
78	SLU 22	-252	26	2990	-18.18	-8.56	-0.09
78	SLU 23	-273	33	3259	-28.04	-9.27	-0.12
78	SLU 24	-271	27	3025	-18.56	-9.37	-0.1
78	SLU 25	-283	31	3186	-24.48	-9.8	-0.11
78	SLU 26	-292	34	3278	-28.22	-10.14	-0.12

Nodo	Cont.	Reazione a traslazione			Reazione a rotazione		
Ind.	N.br.	x	y	z	x	y	z
78	SLU 27	-290	27	3044	-18.73	-10.23	-0.1
78	SLU 28	-303	31	3205	-24.65	-10.66	-0.11
78	SLU 29	-290	27	3028	-18.53	-10.28	-0.1
78	SLU 30	-303	31	3190	-24.45	-10.71	-0.11
78	SLU 31	-300	37	3635	-30.24	-10.14	-0.13
78	SLU 32	-297	30	3401	-20.76	-10.23	-0.11
78	SLU 33	-310	34	3563	-26.68	-10.66	-0.12
78	SLU 34	-319	37	3654	-30.42	-11	-0.13
78	SLU 35	-317	30	3420	-20.93	-11.09	-0.11
78	SLU 36	-329	35	3582	-26.85	-11.52	-0.12
78	SLU 37	-317	30	3405	-20.73	-11.15	-0.11
78	SLU 38	-330	34	3566	-26.65	-11.58	-0.12
78	SLU 39	-290	31	3528	-21.32	-9.79	-0.11
78	SLU 40	-303	35	3689	-27.24	-10.22	-0.13
78	SLU 41	-310	31	3547	-21.5	-10.65	-0.11
78	SLU 42	-322	35	3708	-27.42	-11.08	-0.13
78	SLU 43	-288	29	3375	-20.25	-9.89	-0.11
78	SLU 44	-309	36	3643	-30.11	-10.6	-0.13
78	SLU 45	-307	30	3409	-20.63	-10.7	-0.11
78	SLU 46	-319	34	3571	-26.55	-11.12	-0.12
78	SLU 47	-328	36	3663	-30.29	-11.47	-0.13
78	SLU 48	-326	30	3429	-20.81	-11.56	-0.11
78	SLU 49	-339	34	3590	-26.72	-11.99	-0.12
78	SLU 50	-327	30	3413	-20.6	-11.61	-0.11
78	SLU 51	-339	34	3574	-26.52	-12.04	-0.12
78	SLU 52	-336	39	4020	-32.32	-11.46	-0.14
78	SLU 53	-334	33	3786	-22.83	-11.56	-0.12
78	SLU 54	-346	37	3947	-28.75	-11.99	-0.13
78	SLU 55	-355	40	4039	-32.49	-12.33	-0.14
78	SLU 56	-353	33	3805	-23.01	-12.42	-0.12
78	SLU 57	-366	37	3966	-28.92	-12.85	-0.13
78	SLU 58	-354	33	3789	-22.8	-12.48	-0.12
78	SLU 59	-366	37	3951	-28.72	-12.9	-0.13
78	SLU 60	-326	34	3912	-23.39	-11.12	-0.12
78	SLU 61	-339	38	4074	-29.31	-11.55	-0.14
78	SLU 62	-346	34	3931	-23.57	-11.98	-0.12
78	SLU 63	-358	38	4093	-29.49	-12.41	-0.14
78	SLU 64	-312	32	3686	-22.31	-10.64	-0.12
78	SLU 65	-333	39	3955	-32.17	-11.36	-0.14
78	SLU 66	-331	33	3721	-22.69	-11.45	-0.12
78	SLU 67	-343	37	3883	-28.61	-11.88	-0.13
78	SLU 68	-352	39	3974	-32.35	-12.22	-0.14
78	SLU 69	-350	33	3741	-22.86	-12.31	-0.12
78	SLU 70	-363	37	3902	-28.78	-12.74	-0.13
78	SLU 71	-351	33	3725	-22.66	-12.37	-0.12
78	SLU 72	-363	37	3886	-28.58	-12.8	-0.13
78	SLU 73	-360	42	4332	-34.37	-12.22	-0.15
78	SLU 74	-358	36	4098	-24.89	-12.31	-0.13
78	SLU 75	-370	40	4259	-30.81	-12.74	-0.14
78	SLU 76	-379	43	4351	-34.55	-13.08	-0.15
78	SLU 77	-377	36	4117	-25.06	-13.17	-0.13
78	SLU 78	-390	40	4278	-30.98	-13.6	-0.14
78	SLU 79	-377	36	4101	-24.86	-13.23	-0.13
78	SLU 80	-390	40	4262	-30.78	-13.66	-0.14
78	SLU 81	-350	37	4224	-25.45	-11.87	-0.13
78	SLU 82	-363	41	4385	-31.37	-12.3	-0.15
78	SLU 83	-370	37	4243	-25.63	-12.74	-0.13
78	SLU 84	-382	41	4405	-31.55	-13.16	-0.15
78	SLE RA 1	-235	24	2767	-16.71	-8.02	-0.09
78	SLE RA 2	-249	29	2946	-23.28	-8.5	-0.1
78	SLE RA 3	-247	25	2790	-16.96	-8.56	-0.09
78	SLE RA 4	-256	27	2898	-20.91	-8.84	-0.1
78	SLE RA 5	-262	29	2959	-23.4	-9.07	-0.1
78	SLE RA 6	-260	25	2803	-17.08	-9.13	-0.09
78	SLE RA 7	-269	27	2911	-21.02	-9.42	-0.1
78	SLE RA 8	-260	24	2793	-16.94	-9.17	-0.09
78	SLE RA 9	-269	27	2900	-20.89	-9.46	-0.1
78	SLE RA 10	-267	31	3197	-24.75	-9.07	-0.11
78	SLE RA 11	-265	27	3041	-18.43	-9.13	-0.1
78	SLE RA 12	-274	29	3149	-22.37	-9.42	-0.11
78	SLE RA 13	-280	31	3210	-24.87	-9.65	-0.11
78	SLE RA 14	-278	27	3054	-18.55	-9.71	-0.1
78	SLE RA 15	-286	30	3162	-22.49	-9.99	-0.11
78	SLE RA 16	-278	27	3044	-18.41	-9.75	-0.1
78	SLE RA 17	-287	29	3151	-22.36	-10.03	-0.11
78	SLE RA 18	-260	27	3126	-18.8	-8.84	-0.1
78	SLE RA 19	-269	30	3233	-22.75	-9.13	-0.11
78	SLE RA 20	-273	27	3138	-18.92	-9.42	-0.1
78	SLE RA 21	-282	30	3246	-22.87	-9.7	-0.11
78	SLE FR 1	-235	24	2767	-16.71	-8.02	-0.09
78	SLE FR 2	-237	25	2803	-18.02	-8.12	-0.09
78	SLE FR 3	-240	24	2772	-16.75	-8.25	-0.09
78	SLE FR 4	-245	26	2910	-18.65	-8.36	-0.09
78	SLE FR 5	-247	25	2880	-17.38	-8.5	-0.09
78	SLE FR 6	-247	26	2946	-17.76	-8.43	-0.09
78	SLE QP 1	-235	24	2767	-16.71	-8.02	-0.09
78	SLE QP 2	-242	25	2875	-17.34	-8.27	-0.09
78	SLD 1	482	27	2739	-19.62	25.37	-0.1
78	SLD 2	482	27	2739	-19.62	25.37	-0.1
78	SLD 3	620	12	2507	-2.98	31.28	-0.05

Nodo	Cont.	Reazione a traslazione			Reazione a rotazione		
Ind.	N.br.	x	y	z	x	y	z
78	SLD 4	620	12	2507	-2.98	31.28	-0.05
78	SLD 5	-235	47	3187	-43.26	-7.14	-0.17
78	SLD 6	-235	47	3187	-43.26	-7.14	-0.17
78	SLD 7	226	0	2411	12.21	12.56	0
78	SLD 8	226	0	2411	12.21	12.56	0
78	SLD 9	-711	51	3338	-46.88	-29.1	-0.18
78	SLD 10	-711	51	3338	-46.88	-29.1	-0.18
78	SLD 11	-250	3	2562	8.59	-9.39	-0.01
78	SLD 12	-250	3	2562	8.59	-9.39	-0.01
78	SLD 13	-1104	38	3243	-31.7	-47.81	-0.14
78	SLD 14	-1104	38	3243	-31.7	-47.81	-0.14
78	SLD 15	-966	24	3010	-15.05	-41.9	-0.08
78	SLD 16	-966	24	3010	-15.05	-41.9	-0.08
78	SLV 1	1442	29	2562	-23.46	70.02	-0.11
78	SLV 2	1442	29	2562	-23.46	70.02	-0.11
78	SLV 3	1784	-6	2003	17.98	84.65	0.02
78	SLV 4	1784	-6	2003	17.98	84.65	0.02
78	SLV 5	-255	80	3629	-82.03	-6.96	-0.28
78	SLV 6	-255	80	3629	-82.03	-6.96	-0.28
78	SLV 7	883	-38	1765	56.11	41.79	0.13
78	SLV 8	883	-38	1765	56.11	41.79	0.13
78	SLV 9	-1368	88	3985	-90.79	-58.32	-0.31
78	SLV 10	-1368	88	3985	-90.79	-58.32	-0.31
78	SLV 11	-230	-30	2120	47.36	-9.57	0.1
78	SLV 12	-230	-30	2120	47.36	-9.57	0.1
78	SLV 13	-2268	56	3747	-52.66	-101.18	-0.2
78	SLV 14	-2268	56	3747	-52.66	-101.18	-0.2
78	SLV 15	-1927	21	3187	-11.21	-86.55	-0.07
78	SLV 16	-1927	21	3187	-11.21	-86.55	-0.07
79	SLU 1	-250	26	2423	-17.97	-11.49	-0.13
79	SLU 2	-287	36	2639	-30.38	-12.9	-0.17
79	SLU 3	-269	26	2453	-18.4	-12.39	-0.13
79	SLU 4	-291	32	2583	-25.84	-13.23	-0.16
79	SLU 5	-306	36	2657	-30.58	-13.81	-0.17
79	SLU 6	-288	27	2471	-18.6	-13.3	-0.13
79	SLU 7	-310	33	2601	-26.04	-14.15	-0.16
79	SLU 8	-288	26	2458	-18.37	-13.33	-0.13
79	SLU 9	-311	32	2588	-25.82	-14.17	-0.16
79	SLU 10	-320	39	2980	-32.81	-14.46	-0.19
79	SLU 11	-302	30	2794	-20.83	-13.95	-0.15
79	SLU 12	-324	36	2924	-28.27	-14.79	-0.17
79	SLU 13	-340	39	2998	-33.01	-15.38	-0.19
79	SLU 14	-322	30	2812	-21.03	-14.87	-0.15
79	SLU 15	-344	36	2942	-28.47	-15.71	-0.18
79	SLU 16	-322	30	2799	-20.8	-14.9	-0.15
79	SLU 17	-344	36	2929	-28.25	-15.74	-0.17
79	SLU 18	-298	31	2910	-21.44	-13.73	-0.15
79	SLU 19	-320	37	3040	-28.88	-14.57	-0.18
79	SLU 20	-317	31	2928	-21.64	-14.65	-0.15
79	SLU 21	-339	37	3058	-29.09	-15.49	-0.18
79	SLU 22	-279	29	2702	-20.25	-12.85	-0.14
79	SLU 23	-316	39	2919	-32.66	-14.25	-0.19
79	SLU 24	-298	30	2733	-20.68	-13.74	-0.14
79	SLU 25	-320	36	2863	-28.12	-14.58	-0.17
79	SLU 26	-335	39	2937	-32.86	-15.17	-0.19
79	SLU 27	-317	30	2751	-20.88	-14.66	-0.15
79	SLU 28	-339	36	2880	-28.33	-15.5	-0.17
79	SLU 29	-318	30	2738	-20.65	-14.69	-0.14
79	SLU 30	-340	36	2868	-28.1	-15.53	-0.17
79	SLU 31	-349	42	3260	-35.09	-15.82	-0.21
79	SLU 32	-331	33	3074	-23.11	-15.31	-0.16
79	SLU 33	-353	39	3204	-30.55	-16.15	-0.19
79	SLU 34	-369	43	3278	-35.29	-16.74	-0.21
79	SLU 35	-351	34	3092	-23.31	-16.23	-0.16
79	SLU 36	-373	39	3221	-30.76	-17.07	-0.19
79	SLU 37	-351	33	3079	-23.08	-16.25	-0.16
79	SLU 38	-373	39	3209	-30.53	-17.09	-0.19
79	SLU 39	-327	34	3190	-23.72	-15.09	-0.17
79	SLU 40	-349	40	3320	-31.17	-15.93	-0.19
79	SLU 41	-346	34	3207	-23.92	-16	-0.17
79	SLU 42	-368	40	3337	-31.37	-16.85	-0.2
79	SLU 43	-315	32	3054	-22.58	-14.48	-0.16
79	SLU 44	-352	42	3270	-34.98	-15.88	-0.2
79	SLU 45	-334	33	3084	-23.01	-15.37	-0.16
79	SLU 46	-356	39	3214	-30.45	-16.21	-0.19
79	SLU 47	-371	42	3288	-35.19	-16.8	-0.21
79	SLU 48	-353	33	3102	-23.21	-16.29	-0.16
79	SLU 49	-375	39	3232	-30.65	-17.13	-0.19
79	SLU 50	-353	33	3089	-22.98	-16.31	-0.16
79	SLU 51	-376	39	3219	-30.43	-17.15	-0.19
79	SLU 52	-385	46	3611	-37.41	-17.44	-0.22
79	SLU 53	-367	37	3425	-25.44	-16.94	-0.18
79	SLU 54	-389	42	3555	-32.88	-17.78	-0.21
79	SLU 55	-405	46	3629	-37.62	-18.36	-0.22
79	SLU 56	-386	37	3443	-25.64	-17.85	-0.18
79	SLU 57	-409	43	3573	-33.08	-18.69	-0.21
79	SLU 58	-387	36	3430	-25.41	-17.88	-0.18
79	SLU 59	-409	42	3560	-32.86	-18.72	-0.21
79	SLU 60	-363	37	3541	-26.05	-16.71	-0.18
79	SLU 61	-385	43	3671	-33.49	-17.55	-0.21

Nodo	Cont.	Reazione a traslazione			Reazione a rotazione		
Ind.	N.br.	x	y	z	x	y	z
79	SLU 62	-382	38	3559	-26.25	-17.63	-0.18
79	SLU 63	-404	44	3689	-33.7	-18.47	-0.21
79	SLU 64	-344	36	3333	-24.86	-15.83	-0.17
79	SLU 65	-381	45	3550	-37.27	-17.23	-0.22
79	SLU 66	-363	36	3364	-25.29	-16.73	-0.18
79	SLU 67	-385	42	3494	-32.73	-17.57	-0.2
79	SLU 68	-400	46	3568	-37.47	-18.15	-0.22
79	SLU 69	-382	37	3382	-25.49	-17.64	-0.18
79	SLU 70	-404	42	3511	-32.93	-18.48	-0.21
79	SLU 71	-382	36	3369	-25.26	-17.67	-0.18
79	SLU 72	-405	42	3499	-32.71	-18.51	-0.2
79	SLU 73	-414	49	3891	-39.7	-18.8	-0.24
79	SLU 74	-396	40	3705	-27.72	-18.29	-0.19
79	SLU 75	-418	46	3835	-35.16	-19.13	-0.22
79	SLU 76	-434	49	3909	-39.9	-19.72	-0.24
79	SLU 77	-416	40	3723	-27.92	-19.21	-0.2
79	SLU 78	-438	46	3852	-35.36	-20.05	-0.22
79	SLU 79	-416	40	3710	-27.69	-19.23	-0.19
79	SLU 80	-438	46	3840	-35.14	-20.08	-0.22
79	SLU 81	-392	41	3821	-28.33	-18.07	-0.2
79	SLU 82	-414	47	3951	-35.78	-18.91	-0.23
79	SLU 83	-411	41	3838	-28.53	-18.99	-0.2
79	SLU 84	-433	47	3968	-35.98	-19.83	-0.23
79	SLE RA 1	-258	27	2503	-18.62	-11.88	-0.13
79	SLE RA 2	-283	33	2647	-26.89	-12.82	-0.16
79	SLE RA 3	-271	27	2523	-18.91	-12.48	-0.13
79	SLE RA 4	-285	31	2610	-23.87	-13.04	-0.15
79	SLE RA 5	-296	33	2659	-27.03	-13.43	-0.16
79	SLE RA 6	-284	27	2535	-19.04	-13.09	-0.13
79	SLE RA 7	-298	31	2621	-24	-13.65	-0.15
79	SLE RA 8	-284	27	2526	-18.89	-13.11	-0.13
79	SLE RA 9	-299	31	2613	-23.85	-13.67	-0.15
79	SLE RA 10	-305	36	2874	-28.51	-13.86	-0.17
79	SLE RA 11	-293	30	2750	-20.53	-13.52	-0.14
79	SLE RA 12	-308	33	2837	-25.49	-14.08	-0.16
79	SLE RA 13	-318	36	2886	-28.65	-14.47	-0.17
79	SLE RA 14	-306	30	2762	-20.66	-14.13	-0.14
79	SLE RA 15	-321	34	2849	-25.62	-14.69	-0.16
79	SLE RA 16	-306	29	2754	-20.51	-14.15	-0.14
79	SLE RA 17	-321	33	2840	-25.47	-14.71	-0.16
79	SLE RA 18	-290	30	2828	-20.94	-13.37	-0.15
79	SLE RA 19	-305	34	2914	-25.9	-13.93	-0.17
79	SLE RA 20	-303	30	2839	-21.07	-13.98	-0.15
79	SLE RA 21	-318	34	2926	-26.03	-14.55	-0.17
79	SLE FR 1	-258	27	2503	-18.62	-11.88	-0.13
79	SLE FR 2	-263	28	2532	-20.28	-12.07	-0.14
79	SLE FR 3	-263	27	2507	-18.68	-12.13	-0.13
79	SLE FR 4	-273	29	2629	-20.97	-12.52	-0.14
79	SLE FR 5	-273	28	2605	-19.37	-12.57	-0.14
79	SLE FR 6	-274	28	2665	-19.78	-12.63	-0.14
79	SLE QP 1	-258	27	2503	-18.62	-11.88	-0.13
79	SLE QP 2	-268	28	2600	-19.32	-12.33	-0.14
79	SLD 1	469	30	2388	-22	23.14	-0.15
79	SLD 2	469	30	2388	-22	23.14	-0.15
79	SLD 3	604	10	2204	-1.15	29.16	-0.05
79	SLD 4	604	10	2204	-1.15	29.16	-0.05
79	SLD 5	-252	58	2815	-51.73	-10.81	-0.28
79	SLD 6	-252	58	2815	-51.73	-10.81	-0.28
79	SLD 7	199	-7	2203	17.74	9.24	0.03
79	SLD 8	199	-7	2203	17.74	9.24	0.03
79	SLD 9	-735	62	2998	-56.38	-33.9	-0.3
79	SLD 10	-735	62	2998	-56.38	-33.9	-0.3
79	SLD 11	-283	-2	2385	13.1	-13.85	0.01
79	SLD 12	-283	-2	2385	13.1	-13.85	0.01
79	SLD 13	-1139	45	2996	-37.48	-53.82	-0.22
79	SLD 14	-1139	45	2996	-37.48	-53.82	-0.22
79	SLD 15	-1004	26	2812	-16.64	-47.8	-0.13
79	SLD 16	-1004	26	2812	-16.64	-47.8	-0.13
79	SLV 1	1446	33	2108	-26.5	70.24	-0.16
79	SLV 2	1446	33	2108	-26.5	70.24	-0.16
79	SLV 3	1781	-15	1664	25.46	85.14	0.06
79	SLV 4	1781	-15	1664	25.46	85.14	0.06
79	SLV 5	-262	102	3126	-100.29	-10.15	-0.49
79	SLV 6	-262	102	3126	-100.29	-10.15	-0.49
79	SLV 7	855	-57	1646	72.93	39.51	0.27
79	SLV 8	855	-57	1646	72.93	39.51	0.27
79	SLV 9	-1391	113	3554	-111.57	-64.17	-0.54
79	SLV 10	-1391	113	3554	-111.57	-64.17	-0.54
79	SLV 11	-273	-46	2075	61.65	-14.5	0.21
79	SLV 12	-273	-46	2075	61.65	-14.5	0.21
79	SLV 13	-2316	70	3536	-64.1	-109.8	-0.33
79	SLV 14	-2316	70	3536	-64.1	-109.8	-0.33
79	SLV 15	-1981	22	3092	-12.13	-94.9	-0.11
79	SLV 16	-1981	22	3092	-12.13	-94.9	-0.11
80	SLU 1	-209	26	2213	-18.45	-8.13	-0.15
80	SLU 2	-264	37	2378	-32.76	-10.57	-0.22
80	SLU 3	-227	26	2240	-18.9	-8.95	-0.16
80	SLU 4	-260	33	2339	-27.48	-10.41	-0.2
80	SLU 5	-283	38	2394	-32.97	-11.47	-0.22
80	SLU 6	-246	26	2256	-19.11	-9.85	-0.16

Nodo	Cont.	Reazione a traslazione			Reazione a rotazione		
Ind.	N.br.	x	y	z	x	y	z
80	SLU 7	-278	33	2355	-27.7	-11.31	-0.2
80	SLU 8	-247	26	2246	-18.88	-9.93	-0.15
80	SLU 9	-280	33	2344	-27.46	-11.39	-0.19
80	SLU 10	-295	41	2688	-35.22	-11.75	-0.24
80	SLU 11	-258	30	2550	-21.36	-10.14	-0.18
80	SLU 12	-290	37	2648	-29.95	-11.6	-0.22
80	SLU 13	-314	41	2704	-35.43	-12.66	-0.24
80	SLU 14	-276	30	2566	-21.57	-11.04	-0.18
80	SLU 15	-309	37	2665	-30.16	-12.5	-0.22
80	SLU 16	-278	30	2556	-21.34	-11.12	-0.18
80	SLU 17	-310	37	2654	-29.92	-12.58	-0.22
80	SLU 18	-253	31	2656	-21.97	-9.83	-0.18
80	SLU 19	-286	38	2755	-30.55	-11.29	-0.22
80	SLU 20	-272	31	2672	-22.18	-10.73	-0.18
80	SLU 21	-305	38	2771	-30.77	-12.19	-0.22
80	SLU 22	-235	29	2465	-20.77	-9.1	-0.17
80	SLU 23	-290	41	2629	-35.08	-11.54	-0.24
80	SLU 24	-252	29	2492	-21.22	-9.92	-0.17
80	SLU 25	-285	36	2590	-29.81	-11.39	-0.21
80	SLU 26	-308	41	2646	-35.3	-12.44	-0.24
80	SLU 27	-271	30	2508	-21.44	-10.83	-0.18
80	SLU 28	-304	37	2607	-30.02	-12.29	-0.22
80	SLU 29	-272	29	2498	-21.2	-10.9	-0.17
80	SLU 30	-305	36	2596	-29.79	-12.37	-0.21
80	SLU 31	-320	44	2939	-37.54	-12.73	-0.26
80	SLU 32	-283	33	2802	-23.68	-11.11	-0.2
80	SLU 33	-316	40	2900	-32.27	-12.58	-0.24
80	SLU 34	-339	44	2956	-37.76	-13.63	-0.26
80	SLU 35	-302	33	2818	-23.9	-12.01	-0.2
80	SLU 36	-335	40	2917	-32.48	-13.48	-0.24
80	SLU 37	-303	33	2808	-23.66	-12.09	-0.2
80	SLU 38	-336	40	2906	-32.25	-13.56	-0.24
80	SLU 39	-279	34	2908	-24.29	-10.8	-0.2
80	SLU 40	-312	41	3007	-32.88	-12.26	-0.24
80	SLU 41	-298	34	2924	-24.5	-11.7	-0.2
80	SLU 42	-331	41	3023	-33.09	-13.16	-0.24
80	SLU 43	-263	32	2791	-23.19	-10.23	-0.19
80	SLU 44	-318	44	2955	-37.5	-12.67	-0.26
80	SLU 45	-281	33	2818	-23.64	-11.05	-0.19
80	SLU 46	-313	40	2916	-32.22	-12.52	-0.23
80	SLU 47	-337	44	2971	-37.71	-13.57	-0.26
80	SLU 48	-299	33	2834	-23.85	-11.96	-0.2
80	SLU 49	-332	40	2932	-32.44	-13.42	-0.24
80	SLU 50	-301	33	2823	-23.62	-12.04	-0.19
80	SLU 51	-333	40	2922	-32.2	-13.5	-0.23
80	SLU 52	-349	47	3265	-39.96	-13.86	-0.28
80	SLU 53	-312	36	3128	-26.1	-12.24	-0.21
80	SLU 54	-344	43	3226	-34.68	-13.71	-0.25
80	SLU 55	-367	48	3281	-40.17	-14.76	-0.28
80	SLU 56	-330	36	3144	-26.31	-13.15	-0.22
80	SLU 57	-363	43	3242	-34.9	-14.61	-0.26
80	SLU 58	-332	36	3133	-26.08	-13.22	-0.21
80	SLU 59	-364	43	3232	-34.66	-14.69	-0.25
80	SLU 60	-307	37	3234	-26.71	-11.93	-0.22
80	SLU 61	-340	44	3332	-35.29	-13.39	-0.26
80	SLU 62	-326	37	3250	-26.92	-12.83	-0.22
80	SLU 63	-359	44	3349	-35.5	-14.3	-0.26
80	SLU 64	-289	35	3043	-25.51	-11.2	-0.21
80	SLU 65	-343	47	3207	-39.82	-13.64	-0.28
80	SLU 66	-306	36	3070	-25.96	-12.03	-0.21
80	SLU 67	-339	43	3168	-34.55	-13.49	-0.25
80	SLU 68	-362	47	3223	-40.03	-14.55	-0.28
80	SLU 69	-325	36	3086	-26.17	-12.93	-0.22
80	SLU 70	-358	43	3184	-34.76	-14.39	-0.26
80	SLU 71	-326	36	3075	-25.94	-13.01	-0.21
80	SLU 72	-359	43	3174	-34.52	-14.47	-0.25
80	SLU 73	-374	51	3517	-42.28	-14.83	-0.3
80	SLU 74	-337	39	3379	-28.42	-13.22	-0.23
80	SLU 75	-370	46	3478	-37.01	-14.68	-0.27
80	SLU 76	-393	51	3533	-42.5	-15.73	-0.3
80	SLU 77	-356	40	3396	-28.64	-14.12	-0.24
80	SLU 78	-389	47	3494	-37.22	-15.58	-0.28
80	SLU 79	-357	39	3385	-28.4	-14.2	-0.23
80	SLU 80	-390	46	3484	-36.99	-15.66	-0.27
80	SLU 81	-333	40	3486	-29.03	-12.9	-0.24
80	SLU 82	-366	47	3584	-37.61	-14.37	-0.28
80	SLU 83	-352	41	3502	-29.24	-13.81	-0.24
80	SLU 84	-385	48	3600	-37.83	-15.27	-0.28
80	SLE RA 1	-216	26	2285	-19.11	-8.4	-0.16
80	SLE RA 2	-253	34	2395	-28.65	-10.03	-0.2
80	SLE RA 3	-228	27	2303	-19.41	-8.95	-0.16
80	SLE RA 4	-250	32	2369	-25.14	-9.93	-0.19
80	SLE RA 5	-265	34	2406	-28.8	-10.63	-0.2
80	SLE RA 6	-241	27	2314	-19.56	-9.55	-0.16
80	SLE RA 7	-263	32	2380	-25.28	-10.53	-0.19
80	SLE RA 8	-242	27	2307	-19.4	-9.61	-0.16
80	SLE RA 9	-263	32	2373	-25.12	-10.58	-0.19
80	SLE RA 10	-274	37	2601	-30.29	-10.82	-0.22
80	SLE RA 11	-249	29	2510	-21.05	-9.75	-0.17
80	SLE RA 12	-271	34	2575	-26.78	-10.72	-0.2

Nodo	Cont.	Reazione a traslazione			Reazione a rotazione		
Ind.	N.br.	x	y	z	x	y	z
80	SLE RA 13	-286	37	2612	-30.44	-11.42	-0.22
80	SLE RA 14	-261	29	2521	-21.2	-10.35	-0.17
80	SLE RA 15	-283	34	2586	-26.92	-11.32	-0.2
80	SLE RA 16	-262	29	2514	-21.04	-10.4	-0.17
80	SLE RA 17	-284	34	2579	-26.76	-11.38	-0.2
80	SLE RA 18	-246	30	2580	-21.46	-9.54	-0.18
80	SLE RA 19	-268	34	2646	-27.18	-10.51	-0.2
80	SLE RA 20	-258	30	2591	-21.6	-10.14	-0.18
80	SLE RA 21	-280	35	2657	-27.32	-11.11	-0.2
80	SLE FR 1	-216	26	2285	-19.11	-8.4	-0.16
80	SLE FR 2	-224	28	2307	-21.02	-8.73	-0.17
80	SLE FR 3	-221	27	2290	-19.17	-8.65	-0.16
80	SLE FR 4	-233	29	2396	-21.73	-9.07	-0.17
80	SLE FR 5	-230	28	2378	-19.87	-8.99	-0.16
80	SLE FR 6	-231	28	2433	-20.29	-8.97	-0.17
80	SLE QP 1	-216	26	2285	-19.11	-8.4	-0.16
80	SLE QP 2	-225	27	2374	-19.82	-8.74	-0.16
80	SLD 1	529	29	2134	-22.66	28.37	-0.17
80	SLD 2	529	29	2134	-22.66	28.37	-0.17
80	SLD 3	660	7	1950	1.25	34.52	-0.05
80	SLD 4	660	7	1950	1.25	34.52	-0.05
80	SLD 5	-198	62	2582	-56.93	-6.94	-0.36
80	SLD 6	-198	62	2582	-56.93	-6.94	-0.36
80	SLD 7	240	-13	1966	22.76	13.57	0.07
80	SLD 8	240	-13	1966	22.76	13.57	0.07
80	SLD 9	-690	68	2781	-62.4	-31.06	-0.39
80	SLD 10	-690	68	2781	-62.4	-31.06	-0.39
80	SLD 11	-252	-7	2165	17.29	-10.55	0.04
80	SLD 12	-252	-7	2165	17.29	-10.55	0.04
80	SLD 13	-1111	48	2798	-40.89	-52.01	-0.28
80	SLD 14	-1111	48	2798	-40.89	-52.01	-0.28
80	SLD 15	-980	26	2613	-16.98	-45.86	-0.15
80	SLD 16	-980	26	2613	-16.98	-45.86	-0.15
80	SLV 1	1530	33	1820	-27.44	77.63	-0.2
80	SLV 2	1530	33	1820	-27.44	77.63	-0.2
80	SLV 3	1856	-23	1367	32.2	92.91	0.12
80	SLV 4	1856	-23	1367	32.2	92.91	0.12
80	SLV 5	-193	114	2895	-112.57	-6.01	-0.66
80	SLV 6	-193	114	2895	-112.57	-6.01	-0.66
80	SLV 7	894	-73	1385	86.25	44.94	0.41
80	SLV 8	894	-73	1385	86.25	44.94	0.41
80	SLV 9	-1344	128	3363	-125.89	-62.42	-0.73
80	SLV 10	-1344	128	3363	-125.89	-62.42	-0.73
80	SLV 11	-257	-59	1853	72.94	-11.47	0.33
80	SLV 12	-257	-59	1853	72.94	-11.47	0.33
80	SLV 13	-2307	78	3380	-71.84	-110.4	-0.45
80	SLV 14	-2307	78	3380	-71.84	-110.4	-0.45
80	SLV 15	-1981	22	2927	-12.19	-95.12	-0.13
80	SLV 16	-1981	22	2927	-12.19	-95.12	-0.13
81	SLU 1	-184	23	2061	-17.93	-9.37	-0.13
81	SLU 2	-252	36	2177	-33.37	-12.51	-0.2
81	SLU 3	-201	24	2085	-18.38	-10.24	-0.14
81	SLU 4	-242	32	2154	-27.64	-12.12	-0.18
81	SLU 5	-271	37	2191	-33.58	-13.46	-0.21
81	SLU 6	-219	24	2100	-18.59	-11.19	-0.14
81	SLU 7	-260	32	2169	-27.85	-13.07	-0.18
81	SLU 8	-221	24	2091	-18.36	-11.28	-0.14
81	SLU 9	-262	32	2160	-27.62	-13.16	-0.18
81	SLU 10	-283	39	2461	-35.72	-14.08	-0.22
81	SLU 11	-232	27	2370	-20.73	-11.81	-0.15
81	SLU 12	-273	35	2439	-29.99	-13.69	-0.2
81	SLU 13	-302	40	2476	-35.94	-15.03	-0.22
81	SLU 14	-250	27	2385	-20.95	-12.76	-0.16
81	SLU 15	-291	35	2454	-30.21	-14.65	-0.2
81	SLU 16	-252	27	2376	-20.71	-12.85	-0.15
81	SLU 17	-293	35	2445	-29.98	-14.73	-0.2
81	SLU 18	-228	28	2468	-21.3	-11.61	-0.16
81	SLU 19	-269	36	2537	-30.56	-13.5	-0.2
81	SLU 20	-247	28	2483	-21.51	-12.57	-0.16
81	SLU 21	-288	36	2552	-30.77	-14.45	-0.2
81	SLU 22	-209	26	2292	-20.17	-10.64	-0.15
81	SLU 23	-277	39	2407	-35.61	-13.78	-0.22
81	SLU 24	-226	27	2316	-20.61	-11.5	-0.15
81	SLU 25	-266	35	2385	-29.88	-13.39	-0.2
81	SLU 26	-295	40	2422	-35.82	-14.73	-0.22
81	SLU 27	-244	27	2330	-20.83	-12.46	-0.15
81	SLU 28	-285	35	2400	-30.09	-14.34	-0.2
81	SLU 29	-246	27	2321	-20.6	-12.54	-0.15
81	SLU 30	-287	35	2390	-29.86	-14.43	-0.2
81	SLU 31	-308	42	2692	-37.96	-15.35	-0.24
81	SLU 32	-257	30	2600	-22.97	-13.08	-0.17
81	SLU 33	-297	38	2670	-32.23	-14.96	-0.21
81	SLU 34	-326	43	2707	-38.17	-16.3	-0.24
81	SLU 35	-275	30	2615	-23.18	-14.03	-0.17
81	SLU 36	-316	38	2684	-32.45	-15.91	-0.22
81	SLU 37	-277	30	2606	-22.95	-14.12	-0.17
81	SLU 38	-318	38	2675	-32.21	-16	-0.21
81	SLU 39	-253	31	2699	-23.53	-12.88	-0.18
81	SLU 40	-294	39	2768	-32.79	-14.77	-0.22
81	SLU 41	-272	31	2713	-23.75	-13.84	-0.18

Nodo	Cont.	Reazione a traslazione			Reazione a rotazione		
Ind.	N.br.	x	y	z	x	y	z
81	SLU 42	-312	39	2783	-33.01	-15.72	-0.22
81	SLU 43	-231	29	2601	-22.54	-11.74	-0.17
81	SLU 44	-299	42	2716	-37.98	-14.88	-0.24
81	SLU 45	-247	30	2624	-22.99	-12.61	-0.17
81	SLU 46	-288	38	2694	-32.25	-14.5	-0.21
81	SLU 47	-317	43	2731	-38.2	-15.84	-0.24
81	SLU 48	-266	30	2639	-23.2	-13.57	-0.17
81	SLU 49	-307	38	2708	-32.47	-15.45	-0.21
81	SLU 50	-268	30	2630	-22.97	-13.65	-0.17
81	SLU 51	-309	38	2699	-32.24	-15.54	-0.21
81	SLU 52	-330	45	3001	-40.34	-16.46	-0.26
81	SLU 53	-278	33	2909	-25.34	-14.18	-0.19
81	SLU 54	-319	41	2978	-34.61	-16.07	-0.23
81	SLU 55	-348	46	3016	-40.55	-17.41	-0.26
81	SLU 56	-297	34	2924	-25.56	-15.14	-0.19
81	SLU 57	-338	41	2993	-34.82	-17.02	-0.23
81	SLU 58	-299	33	2915	-25.33	-15.22	-0.19
81	SLU 59	-340	41	2984	-34.59	-17.11	-0.23
81	SLU 60	-275	34	3007	-25.91	-13.99	-0.19
81	SLU 61	-316	42	3077	-35.17	-15.87	-0.24
81	SLU 62	-293	34	3022	-26.12	-14.94	-0.19
81	SLU 63	-334	42	3091	-35.38	-16.83	-0.24
81	SLU 64	-255	32	2831	-24.78	-13.01	-0.18
81	SLU 65	-324	45	2946	-40.22	-16.15	-0.26
81	SLU 66	-272	33	2855	-25.23	-13.88	-0.19
81	SLU 67	-313	41	2924	-34.49	-15.76	-0.23
81	SLU 68	-342	46	2961	-40.43	-17.11	-0.26
81	SLU 69	-291	33	2870	-25.44	-14.83	-0.19
81	SLU 70	-332	41	2939	-34.7	-16.72	-0.23
81	SLU 71	-293	33	2860	-25.21	-14.92	-0.19
81	SLU 72	-333	41	2930	-34.47	-16.8	-0.23
81	SLU 73	-354	48	3231	-42.57	-17.72	-0.27
81	SLU 74	-303	36	3140	-27.58	-15.45	-0.2
81	SLU 75	-344	44	3209	-36.84	-17.34	-0.25
81	SLU 76	-373	49	3246	-42.79	-18.68	-0.28
81	SLU 77	-322	36	3154	-27.8	-16.41	-0.21
81	SLU 78	-363	44	3224	-37.06	-18.29	-0.25
81	SLU 79	-324	36	3145	-27.56	-16.49	-0.2
81	SLU 80	-364	44	3215	-36.83	-18.38	-0.25
81	SLU 81	-300	37	3238	-28.14	-15.26	-0.21
81	SLU 82	-341	45	3307	-37.41	-17.14	-0.25
81	SLU 83	-318	37	3253	-28.36	-16.21	-0.21
81	SLU 84	-359	45	3322	-37.62	-18.09	-0.25
81	SLE RA 1	-191	24	2127	-18.57	-9.73	-0.14
81	SLE RA 2	-236	33	2204	-28.86	-11.82	-0.19
81	SLE RA 3	-202	25	2143	-18.87	-10.31	-0.14
81	SLE RA 4	-229	30	2189	-25.04	-11.57	-0.17
81	SLE RA 5	-249	33	2214	-29.01	-12.46	-0.19
81	SLE RA 6	-215	25	2153	-19.01	-10.95	-0.14
81	SLE RA 7	-242	30	2199	-25.19	-12.2	-0.17
81	SLE RA 8	-216	25	2147	-18.86	-11	-0.14
81	SLE RA 9	-243	30	2193	-25.03	-12.26	-0.17
81	SLE RA 10	-257	35	2394	-30.43	-12.87	-0.2
81	SLE RA 11	-223	27	2333	-20.44	-11.36	-0.15
81	SLE RA 12	-250	32	2379	-26.61	-12.61	-0.18
81	SLE RA 13	-269	35	2404	-30.58	-13.51	-0.2
81	SLE RA 14	-235	27	2343	-20.58	-11.99	-0.15
81	SLE RA 15	-262	32	2389	-26.76	-13.25	-0.18
81	SLE RA 16	-236	27	2337	-20.43	-12.05	-0.15
81	SLE RA 17	-264	32	2383	-26.6	-13.31	-0.18
81	SLE RA 18	-221	27	2398	-20.81	-11.23	-0.15
81	SLE RA 19	-248	32	2445	-26.99	-12.48	-0.18
81	SLE RA 20	-233	28	2408	-20.96	-11.86	-0.16
81	SLE RA 21	-260	33	2454	-27.13	-13.12	-0.18
81	SLE FR 1	-191	24	2127	-18.57	-9.73	-0.14
81	SLE FR 2	-200	26	2142	-20.63	-10.15	-0.15
81	SLE FR 3	-196	24	2131	-18.63	-9.99	-0.14
81	SLE FR 4	-209	27	2224	-21.3	-10.6	-0.15
81	SLE FR 5	-205	25	2212	-19.3	-10.43	-0.14
81	SLE FR 6	-206	26	2263	-19.69	-10.48	-0.15
81	SLE QP 1	-191	24	2127	-18.57	-9.73	-0.14
81	SLE QP 2	-200	25	2208	-19.24	-10.18	-0.14
81	SLD 1	578	27	1988	-22.05	29.9	-0.15
81	SLD 2	578	27	1988	-22.05	29.9	-0.15
81	SLD 3	702	3	1777	3.55	36.02	-0.02
81	SLD 4	702	3	1777	3.55	36.02	-0.02
81	SLD 5	-155	62	2461	-58.9	-7.44	-0.35
81	SLD 6	-155	62	2461	-58.9	-7.44	-0.35
81	SLD 7	259	-18	1760	26.41	12.96	0.1
81	SLD 8	259	-18	1760	26.41	12.96	0.1
81	SLD 9	-659	68	2656	-64.9	-33.32	-0.38
81	SLD 10	-659	68	2656	-64.9	-33.32	-0.38
81	SLD 11	-245	-12	1956	20.41	-12.92	0.06
81	SLD 12	-245	-12	1956	20.41	-12.92	0.06
81	SLD 13	-1102	48	2639	-42.04	-56.38	-0.27
81	SLD 14	-1102	48	2639	-42.04	-56.38	-0.27
81	SLD 15	-977	24	2429	-16.44	-50.26	-0.13
81	SLD 16	-977	24	2429	-16.44	-50.26	-0.13
81	SLV 1	1609	30	1701	-26.78	83.12	-0.17
81	SLV 2	1609	30	1701	-26.78	83.12	-0.17

Nodo	Cont.	Reazione a traslazione			Reazione a rotazione		
Ind.	N.br.	x	y	z	x	y	z
81	SLV 3	1919	-30	1181	37.09	98.37	0.16
81	SLV 4	1919	-30	1181	37.09	98.37	0.16
81	SLV 5	-127	118	2844	-118.38	-5.32	-0.66
81	SLV 6	-127	118	2844	-118.38	-5.32	-0.66
81	SLV 7	906	-82	1113	94.53	45.52	0.46
81	SLV 8	906	-82	1113	94.53	45.52	0.46
81	SLV 9	-1306	132	3304	-133.02	-65.88	-0.74
81	SLV 10	-1306	132	3304	-133.02	-65.88	-0.74
81	SLV 11	-273	-67	1573	79.9	-15.03	0.37
81	SLV 12	-273	-67	1573	79.9	-15.03	0.37
81	SLV 13	-2319	80	3236	-75.58	-118.73	-0.45
81	SLV 14	-2319	80	3236	-75.58	-118.73	-0.45
81	SLV 15	-2009	20	2716	-11.7	-103.48	-0.11
81	SLV 16	-2009	20	2716	-11.7	-103.48	-0.11
82	SLU 1	-101	21	1983	-16.97	-4.77	-0.07
82	SLU 2	-178	34	2059	-32.74	-8.81	-0.11
82	SLU 3	-116	21	2005	-17.4	-5.54	-0.07
82	SLU 4	-162	29	2051	-26.86	-7.96	-0.1
82	SLU 5	-195	34	2073	-32.94	-9.73	-0.11
82	SLU 6	-133	22	2018	-17.61	-6.47	-0.07
82	SLU 7	-179	30	2064	-27.07	-8.89	-0.1
82	SLU 8	-136	21	2009	-17.38	-6.62	-0.07
82	SLU 9	-182	29	2055	-26.84	-9.04	-0.1
82	SLU 10	-199	37	2328	-34.93	-9.83	-0.12
82	SLU 11	-137	24	2274	-19.59	-6.57	-0.08
82	SLU 12	-183	32	2320	-29.05	-8.99	-0.11
82	SLU 13	-216	37	2342	-35.13	-10.76	-0.12
82	SLU 14	-154	24	2288	-19.8	-7.49	-0.08
82	SLU 15	-200	32	2333	-29.26	-9.92	-0.11
82	SLU 16	-157	24	2279	-19.57	-7.65	-0.08
82	SLU 17	-203	32	2325	-29.03	-10.07	-0.11
82	SLU 18	-131	25	2367	-20.1	-6.24	-0.08
82	SLU 19	-177	33	2413	-29.56	-8.66	-0.11
82	SLU 20	-149	25	2381	-20.3	-7.16	-0.08
82	SLU 21	-195	33	2427	-29.76	-9.58	-0.11
82	SLU 22	-116	24	2201	-19.06	-5.5	-0.08
82	SLU 23	-193	37	2277	-34.83	-9.53	-0.12
82	SLU 24	-131	24	2223	-19.49	-6.27	-0.08
82	SLU 25	-177	32	2269	-28.95	-8.69	-0.11
82	SLU 26	-210	37	2291	-35.04	-10.46	-0.12
82	SLU 27	-149	24	2237	-19.7	-7.2	-0.08
82	SLU 28	-195	32	2282	-29.16	-9.62	-0.11
82	SLU 29	-151	24	2228	-19.48	-7.35	-0.08
82	SLU 30	-197	32	2273	-28.94	-9.77	-0.11
82	SLU 31	-214	39	2547	-37.02	-10.56	-0.13
82	SLU 32	-152	27	2492	-21.68	-7.3	-0.09
82	SLU 33	-198	35	2538	-31.14	-9.72	-0.12
82	SLU 34	-232	40	2560	-37.23	-11.49	-0.13
82	SLU 35	-170	27	2506	-21.89	-8.22	-0.09
82	SLU 36	-216	35	2552	-31.35	-10.64	-0.12
82	SLU 37	-172	27	2497	-21.67	-8.38	-0.09
82	SLU 38	-218	35	2543	-31.13	-10.8	-0.12
82	SLU 39	-146	28	2586	-22.19	-6.97	-0.09
82	SLU 40	-192	35	2631	-31.65	-9.39	-0.12
82	SLU 41	-164	28	2599	-22.4	-7.89	-0.09
82	SLU 42	-210	36	2645	-31.86	-10.31	-0.12
82	SLU 43	-126	26	2503	-21.34	-5.95	-0.09
82	SLU 44	-203	39	2579	-37.11	-9.99	-0.13
82	SLU 45	-141	27	2525	-21.77	-6.72	-0.09
82	SLU 46	-187	35	2571	-31.23	-9.14	-0.12
82	SLU 47	-220	40	2593	-37.32	-10.91	-0.13
82	SLU 48	-158	27	2538	-21.98	-7.65	-0.09
82	SLU 49	-204	35	2584	-31.44	-10.07	-0.12
82	SLU 50	-161	27	2530	-21.76	-7.8	-0.09
82	SLU 51	-207	35	2575	-31.22	-10.23	-0.12
82	SLU 52	-224	42	2848	-39.3	-11.01	-0.14
82	SLU 53	-162	30	2794	-23.96	-7.75	-0.1
82	SLU 54	-208	37	2840	-33.42	-10.17	-0.13
82	SLU 55	-241	42	2862	-39.51	-11.94	-0.14
82	SLU 56	-179	30	2808	-24.17	-8.68	-0.1
82	SLU 57	-225	38	2853	-33.63	-11.1	-0.13
82	SLU 58	-182	30	2799	-23.94	-8.83	-0.1
82	SLU 59	-228	37	2845	-33.41	-11.25	-0.13
82	SLU 60	-156	30	2887	-24.47	-7.42	-0.1
82	SLU 61	-202	38	2933	-33.93	-9.84	-0.13
82	SLU 62	-174	31	2901	-24.68	-8.35	-0.1
82	SLU 63	-220	38	2947	-34.14	-10.77	-0.13
82	SLU 64	-141	29	2721	-23.44	-6.68	-0.1
82	SLU 65	-218	42	2797	-39.2	-10.72	-0.14
82	SLU 66	-156	29	2743	-23.87	-7.45	-0.1
82	SLU 67	-202	37	2789	-33.33	-9.87	-0.13
82	SLU 68	-236	42	2811	-39.41	-11.64	-0.14
82	SLU 69	-174	30	2757	-24.07	-8.38	-0.1
82	SLU 70	-220	38	2802	-33.53	-10.8	-0.13
82	SLU 71	-176	29	2748	-23.85	-8.53	-0.1
82	SLU 72	-222	37	2793	-33.31	-10.95	-0.12
82	SLU 73	-239	45	3067	-41.39	-11.74	-0.15
82	SLU 74	-177	32	3012	-26.06	-8.48	-0.11
82	SLU 75	-223	40	3058	-35.52	-10.9	-0.13
82	SLU 76	-257	45	3080	-41.6	-12.67	-0.15

Nodo	Cont.	Reazione a traslazione			Reazione a rotazione		
Ind.	N.br.	x	y	z	x	y	z
82	SLU 77	-195	32	3026	-26.26	-9.41	-0.11
82	SLU 78	-241	40	3072	-35.72	-11.83	-0.14
82	SLU 79	-198	32	3017	-26.04	-9.56	-0.11
82	SLU 80	-244	40	3063	-35.5	-11.98	-0.13
82	SLU 81	-171	33	3106	-26.56	-8.15	-0.11
82	SLU 82	-217	41	3151	-36.02	-10.57	-0.14
82	SLU 83	-189	33	3119	-26.77	-9.07	-0.11
82	SLU 84	-235	41	3165	-36.23	-11.49	-0.14
82	SLE RA 1	-105	22	2045	-17.57	-4.98	-0.07
82	SLE RA 2	-156	30	2096	-28.08	-7.67	-0.1
82	SLE RA 3	-115	22	2060	-17.85	-5.49	-0.07
82	SLE RA 4	-146	27	2090	-24.16	-7.11	-0.09
82	SLE RA 5	-168	31	2105	-28.22	-8.29	-0.1
82	SLE RA 6	-127	22	2069	-17.99	-6.11	-0.07
82	SLE RA 7	-158	27	2099	-24.3	-7.72	-0.09
82	SLE RA 8	-129	22	2063	-17.84	-6.21	-0.07
82	SLE RA 9	-159	27	2093	-24.15	-7.83	-0.09
82	SLE RA 10	-170	32	2276	-29.54	-8.35	-0.11
82	SLE RA 11	-129	24	2239	-19.31	-6.18	-0.08
82	SLE RA 12	-160	29	2270	-25.62	-7.79	-0.1
82	SLE RA 13	-182	32	2284	-29.68	-8.97	-0.11
82	SLE RA 14	-141	24	2248	-19.45	-6.8	-0.08
82	SLE RA 15	-172	29	2279	-25.76	-8.41	-0.1
82	SLE RA 16	-143	24	2242	-19.3	-6.9	-0.08
82	SLE RA 17	-173	29	2273	-25.61	-8.51	-0.1
82	SLE RA 18	-125	24	2302	-19.65	-5.96	-0.08
82	SLE RA 19	-156	30	2332	-25.96	-7.57	-0.1
82	SLE RA 20	-137	24	2310	-19.79	-6.57	-0.08
82	SLE RA 21	-168	30	2341	-26.1	-8.19	-0.1
82	SLE FR 1	-105	22	2045	-17.57	-4.98	-0.07
82	SLE FR 2	-115	23	2055	-19.67	-5.52	-0.08
82	SLE FR 3	-110	22	2049	-17.62	-5.23	-0.07
82	SLE FR 4	-122	24	2132	-20.29	-5.81	-0.08
82	SLE FR 5	-116	23	2126	-18.25	-5.52	-0.08
82	SLE FR 6	-115	23	2173	-18.61	-5.47	-0.08
82	SLE QP 1	-105	22	2045	-17.57	-4.98	-0.07
82	SLE QP 2	-111	22	2122	-18.19	-5.27	-0.08
82	SLD 1	675	24	1948	-20.79	36.31	-0.08
82	SLD 2	675	24	1948	-20.79	36.31	-0.08
82	SLD 3	793	0	1716	5.11	42.52	0
82	SLD 4	793	0	1716	5.11	42.52	0
82	SLD 5	-54	59	2422	-58.26	-2.22	-0.2
82	SLD 6	-54	59	2422	-58.26	-2.22	-0.2
82	SLD 7	339	-20	1648	28.09	18.49	0.07
82	SLD 8	339	-20	1648	28.09	18.49	0.07
82	SLD 9	-561	65	2596	-64.47	-29.04	-0.22
82	SLD 10	-561	65	2596	-64.47	-29.04	-0.22
82	SLD 11	-169	-14	1822	21.88	-8.32	0.05
82	SLD 12	-169	-14	1822	21.88	-8.32	0.05
82	SLD 13	-1016	45	2528	-41.5	-53.07	-0.15
82	SLD 14	-1016	45	2528	-41.5	-53.07	-0.15
82	SLD 15	-898	21	2296	-15.59	-46.85	-0.07
82	SLD 16	-898	21	2296	-15.59	-46.85	-0.07
82	SLV 1	1719	27	1725	-25.19	91.5	-0.09
82	SLV 2	1719	27	1725	-25.19	91.5	-0.09
82	SLV 3	2013	-32	1149	39.46	107.02	0.12
82	SLV 4	2013	-32	1149	39.46	107.02	0.12
82	SLV 5	-9	114	2876	-118.34	0.22	-0.38
82	SLV 6	-9	114	2876	-118.34	0.22	-0.38
82	SLV 7	973	-84	957	97.15	51.96	0.29
82	SLV 8	973	-84	957	97.15	51.96	0.29
82	SLV 9	-1195	129	3287	-133.54	-62.5	-0.44
82	SLV 10	-1195	129	3287	-133.54	-62.5	-0.44
82	SLV 11	-214	-69	1368	81.96	-10.76	0.23
82	SLV 12	-214	-69	1368	81.96	-10.76	0.23
82	SLV 13	-2236	77	3095	-75.85	-117.57	-0.27
82	SLV 14	-2236	77	3095	-75.85	-117.57	-0.27
82	SLV 15	-1941	18	2519	-11.2	-102.04	-0.07
82	SLV 16	-1941	18	2519	-11.2	-102.04	-0.07
83	SLU 1	-13	19	2012	-15.98	-1.58	-0.03
83	SLU 2	-88	32	2069	-31.32	-5.66	-0.05
83	SLU 3	-25	20	2035	-16.4	-2.28	-0.03
83	SLU 4	-70	27	2069	-25.6	-4.73	-0.04
83	SLU 5	-104	32	2082	-31.52	-6.56	-0.05
83	SLU 6	-41	20	2048	-16.6	-3.18	-0.03
83	SLU 7	-86	27	2082	-25.8	-5.63	-0.04
83	SLU 8	-45	20	2038	-16.38	-3.38	-0.03
83	SLU 9	-90	27	2072	-25.59	-5.83	-0.04
83	SLU 10	-98	34	2339	-33.36	-6.3	-0.05
83	SLU 11	-35	22	2305	-18.43	-2.92	-0.04
83	SLU 12	-80	30	2339	-27.63	-5.37	-0.05
83	SLU 13	-114	34	2352	-33.56	-7.2	-0.05
83	SLU 14	-51	22	2318	-18.63	-3.82	-0.04
83	SLU 15	-96	30	2352	-27.83	-6.27	-0.05
83	SLU 16	-55	22	2308	-18.42	-4.02	-0.04
83	SLU 17	-100	30	2342	-27.62	-6.47	-0.05
83	SLU 18	-27	23	2398	-18.89	-2.49	-0.04
83	SLU 19	-73	30	2432	-28.09	-4.94	-0.05
83	SLU 20	-43	23	2411	-19.09	-3.39	-0.04
83	SLU 21	-89	31	2445	-28.29	-5.84	-0.05

Nodo	Cont.	Reazione a traslazione			Reazione a rotazione		
Ind.	N.br.	x	y	z	x	y	z
83	SLU 22	-18	22	2233	-17.95	-1.93	-0.03
83	SLU 23	-93	34	2290	-33.28	-6.02	-0.05
83	SLU 24	-30	22	2256	-18.36	-2.63	-0.04
83	SLU 25	-75	30	2290	-27.56	-5.08	-0.05
83	SLU 26	-109	34	2302	-33.48	-6.92	-0.05
83	SLU 27	-46	22	2269	-18.56	-3.53	-0.04
83	SLU 28	-91	30	2303	-27.76	-5.98	-0.05
83	SLU 29	-50	22	2259	-18.34	-3.73	-0.04
83	SLU 30	-95	30	2293	-27.55	-6.18	-0.05
83	SLU 31	-103	37	2559	-35.32	-6.65	-0.06
83	SLU 32	-40	25	2526	-20.39	-3.27	-0.04
83	SLU 33	-85	32	2560	-29.59	-5.72	-0.05
83	SLU 34	-119	37	2572	-35.52	-7.55	-0.06
83	SLU 35	-56	25	2538	-20.59	-4.17	-0.04
83	SLU 36	-101	32	2572	-29.79	-6.62	-0.05
83	SLU 37	-60	25	2529	-20.38	-4.37	-0.04
83	SLU 38	-105	32	2562	-29.58	-6.82	-0.05
83	SLU 39	-32	25	2618	-20.85	-2.85	-0.04
83	SLU 40	-77	33	2652	-30.05	-5.29	-0.05
83	SLU 41	-48	25	2631	-21.05	-3.75	-0.04
83	SLU 42	-93	33	2665	-30.25	-6.19	-0.05
83	SLU 43	-15	24	2541	-20.11	-1.93	-0.04
83	SLU 44	-91	37	2597	-35.45	-6.02	-0.06
83	SLU 45	-28	25	2563	-20.52	-2.63	-0.04
83	SLU 46	-73	32	2597	-29.72	-5.08	-0.05
83	SLU 47	-107	37	2610	-35.65	-6.92	-0.06
83	SLU 48	-44	25	2576	-20.72	-3.53	-0.04
83	SLU 49	-89	32	2610	-29.92	-5.98	-0.05
83	SLU 50	-48	25	2566	-20.51	-3.73	-0.04
83	SLU 51	-93	32	2600	-29.71	-6.18	-0.05
83	SLU 52	-101	39	2867	-37.48	-6.65	-0.06
83	SLU 53	-38	27	2833	-22.55	-3.27	-0.04
83	SLU 54	-83	35	2867	-31.76	-5.72	-0.05
83	SLU 55	-117	39	2880	-37.68	-7.55	-0.06
83	SLU 56	-54	27	2846	-22.75	-4.17	-0.04
83	SLU 57	-99	35	2880	-31.95	-6.62	-0.06
83	SLU 58	-58	27	2836	-22.54	-4.37	-0.04
83	SLU 59	-103	35	2870	-31.74	-6.82	-0.05
83	SLU 60	-30	28	2926	-23.01	-2.84	-0.04
83	SLU 61	-75	35	2960	-32.22	-5.29	-0.06
83	SLU 62	-46	28	2939	-23.21	-3.74	-0.04
83	SLU 63	-91	35	2973	-32.42	-6.19	-0.06
83	SLU 64	-20	27	2761	-22.07	-2.29	-0.04
83	SLU 65	-95	39	2818	-37.41	-6.37	-0.06
83	SLU 66	-32	27	2784	-22.48	-2.98	-0.04
83	SLU 67	-77	35	2818	-31.68	-5.43	-0.05
83	SLU 68	-111	39	2831	-37.61	-7.27	-0.06
83	SLU 69	-48	27	2797	-22.68	-3.89	-0.04
83	SLU 70	-93	35	2831	-31.88	-6.33	-0.06
83	SLU 71	-52	27	2787	-22.47	-4.09	-0.04
83	SLU 72	-97	35	2821	-31.67	-6.54	-0.05
83	SLU 73	-105	42	3088	-39.44	-7.01	-0.07
83	SLU 74	-42	30	3054	-24.51	-3.62	-0.05
83	SLU 75	-87	37	3088	-33.72	-6.07	-0.06
83	SLU 76	-121	42	3100	-39.64	-7.91	-0.07
83	SLU 77	-58	30	3067	-24.71	-4.52	-0.05
83	SLU 78	-103	37	3101	-33.92	-6.97	-0.06
83	SLU 79	-62	29	3057	-24.5	-4.73	-0.05
83	SLU 80	-107	37	3091	-33.7	-7.17	-0.06
83	SLU 81	-34	30	3147	-24.97	-3.2	-0.05
83	SLU 82	-80	38	3181	-34.18	-5.65	-0.06
83	SLU 83	-50	30	3159	-25.17	-4.1	-0.05
83	SLU 84	-96	38	3193	-34.38	-6.55	-0.06
83	SLE RA 1	-14	20	2075	-16.55	-1.68	-0.03
83	SLE RA 2	-65	28	2113	-26.77	-4.4	-0.04
83	SLE RA 3	-22	20	2091	-16.82	-2.15	-0.03
83	SLE RA 4	-53	25	2113	-22.95	-3.78	-0.04
83	SLE RA 5	-75	28	2122	-26.9	-5	-0.04
83	SLE RA 6	-33	20	2099	-16.95	-2.75	-0.03
83	SLE RA 7	-63	25	2122	-23.09	-4.38	-0.04
83	SLE RA 8	-36	20	2093	-16.81	-2.88	-0.03
83	SLE RA 9	-66	25	2115	-22.95	-4.51	-0.04
83	SLE RA 10	-71	30	2293	-28.13	-4.83	-0.05
83	SLE RA 11	-29	22	2271	-18.18	-2.57	-0.03
83	SLE RA 12	-59	27	2293	-24.31	-4.21	-0.04
83	SLE RA 13	-82	30	2302	-28.26	-5.43	-0.05
83	SLE RA 14	-40	22	2279	-18.31	-3.17	-0.04
83	SLE RA 15	-70	27	2302	-24.44	-4.81	-0.04
83	SLE RA 16	-42	22	2272	-18.17	-3.31	-0.03
83	SLE RA 17	-73	27	2295	-24.3	-4.94	-0.04
83	SLE RA 18	-24	22	2332	-18.48	-2.29	-0.04
83	SLE RA 19	-54	27	2355	-24.62	-3.92	-0.04
83	SLE RA 20	-35	22	2341	-18.61	-2.89	-0.04
83	SLE RA 21	-65	27	2364	-24.75	-4.52	-0.04
83	SLE FR 1	-14	20	2075	-16.55	-1.68	-0.03
83	SLE FR 2	-24	22	2083	-18.59	-2.23	-0.03
83	SLE FR 3	-19	20	2079	-16.6	-1.92	-0.03
83	SLE FR 4	-27	22	2160	-19.17	-2.41	-0.04
83	SLE FR 5	-22	21	2156	-17.18	-2.1	-0.03
83	SLE FR 6	-19	21	2204	-17.51	-1.99	-0.03

Nodo	Cont.	Reazione a traslazione			Reazione a rotazione		
Ind.	N.br.	x	y	z	x	y	z
83	SLE QP 1	-14	20	2075	-16.55	-1.68	-0.03
83	SLE QP 2	-17	21	2153	-17.13	-1.86	-0.03
83	SLD 1	747	22	2019	-19.38	40.56	-0.03
83	SLD 2	747	22	2019	-19.38	40.56	-0.03
83	SLD 3	854	-1	1781	5.62	46.54	0
83	SLD 4	854	-1	1781	5.62	46.54	0
83	SLD 5	49	55	2475	-55.71	1.8	-0.09
83	SLD 6	49	55	2475	-55.71	1.8	-0.09
83	SLD 7	407	-20	1679	27.6	21.72	0.03
83	SLD 8	407	-20	1679	27.6	21.72	0.03
83	SLD 9	-441	61	2626	-61.85	-25.44	-0.1
83	SLD 10	-441	61	2626	-61.85	-25.44	-0.1
83	SLD 11	-84	-14	1830	21.45	-5.53	0.02
83	SLD 12	-84	-14	1830	21.45	-5.53	0.02
83	SLD 13	-889	42	2524	-39.87	-50.26	-0.07
83	SLD 14	-889	42	2524	-39.87	-50.26	-0.07
83	SLD 15	-781	20	2286	-14.88	-44.29	-0.03
83	SLD 16	-781	20	2286	-14.88	-44.29	-0.03
83	SLV 1	1761	24	1850	-23.16	96.9	-0.04
83	SLV 2	1761	24	1850	-23.16	96.9	-0.04
83	SLV 3	2029	-32	1258	39.19	111.82	0.05
83	SLV 4	2029	-32	1258	39.19	111.82	0.05
83	SLV 5	109	107	2959	-113.5	5.14	-0.17
83	SLV 6	109	107	2959	-113.5	5.14	-0.17
83	SLV 7	1004	-80	987	94.33	54.87	0.12
83	SLV 8	1004	-80	987	94.33	54.87	0.12
83	SLV 9	-1038	122	3318	-128.58	-58.6	-0.19
83	SLV 10	-1038	122	3318	-128.58	-58.6	-0.19
83	SLV 11	-144	-66	1346	79.25	-8.86	0.1
83	SLV 12	-144	-66	1346	79.25	-8.86	0.1
83	SLV 13	-2064	73	3047	-73.44	-115.54	-0.12
83	SLV 14	-2064	73	3047	-73.44	-115.54	-0.12
83	SLV 15	-1796	17	2455	-11.09	-100.62	-0.03
83	SLV 16	-1796	17	2455	-11.09	-100.62	-0.03
84	SLU 1	82	19	2153	-15.07	3.04	0
84	SLU 2	10	30	2215	-29.25	-1	-0.01
84	SLU 3	73	19	2179	-15.47	2.53	0
84	SLU 4	30	26	2216	-23.97	0.11	0
84	SLU 5	-4	31	2229	-29.44	-1.77	-0.01
84	SLU 6	60	19	2193	-15.65	1.77	0
84	SLU 7	16	26	2230	-24.16	-0.66	0
84	SLU 8	55	19	2181	-15.45	1.51	0
84	SLU 9	11	26	2218	-23.96	-0.92	0
84	SLU 10	12	33	2502	-31.15	-1.11	-0.01
84	SLU 11	75	22	2466	-17.37	2.42	0
84	SLU 12	32	29	2503	-25.88	0	0
84	SLU 13	-2	33	2516	-31.34	-1.88	-0.01
84	SLU 14	61	22	2480	-17.56	1.66	0
84	SLU 15	18	29	2517	-26.06	-0.77	0
84	SLU 16	56	22	2468	-17.35	1.4	0
84	SLU 17	13	29	2505	-25.86	-1.03	0
84	SLU 18	84	22	2563	-17.79	2.89	0
84	SLU 19	41	29	2600	-26.3	0.46	0
84	SLU 20	71	22	2577	-17.98	2.12	0
84	SLU 21	27	29	2614	-26.49	-0.31	0
84	SLU 22	89	21	2391	-16.92	3.23	0
84	SLU 23	17	33	2453	-31.1	-0.82	-0.01
84	SLU 24	80	22	2417	-17.31	2.71	0
84	SLU 25	37	28	2454	-25.82	0.29	0
84	SLU 26	3	33	2467	-31.28	-1.59	-0.01
84	SLU 27	66	22	2431	-17.5	1.95	0
84	SLU 28	23	29	2468	-26.01	-0.48	0
84	SLU 29	61	22	2419	-17.3	1.69	0
84	SLU 30	18	28	2456	-25.8	-0.74	0
84	SLU 31	18	35	2740	-33	-0.93	-0.01
84	SLU 32	82	24	2704	-19.21	2.6	0
84	SLU 33	39	31	2741	-27.72	0.18	0
84	SLU 34	5	35	2754	-33.19	-1.7	-0.01
84	SLU 35	68	24	2718	-19.4	1.84	0
84	SLU 36	25	31	2755	-27.91	-0.59	0
84	SLU 37	63	24	2706	-19.2	1.58	0
84	SLU 38	20	31	2743	-27.71	-0.85	0
84	SLU 39	91	24	2801	-19.64	3.07	0
84	SLU 40	48	31	2838	-28.14	0.64	0
84	SLU 41	77	25	2815	-19.82	2.3	0
84	SLU 42	34	32	2852	-28.33	-0.13	0
84	SLU 43	104	24	2717	-18.96	3.9	0
84	SLU 44	32	35	2779	-33.14	-0.15	-0.01
84	SLU 45	96	24	2744	-19.36	3.39	0
84	SLU 46	53	31	2781	-27.86	0.96	-0.01
84	SLU 47	19	35	2793	-33.33	-0.92	-0.01
84	SLU 48	82	24	2758	-19.54	2.62	0
84	SLU 49	39	31	2795	-28.05	0.19	-0.01
84	SLU 50	77	24	2745	-19.34	2.36	0
84	SLU 51	34	31	2783	-27.85	-0.07	-0.01
84	SLU 52	34	38	3066	-35.04	-0.26	-0.01
84	SLU 53	97	26	3031	-21.26	3.28	0
84	SLU 54	54	33	3068	-29.77	0.85	-0.01
84	SLU 55	20	38	3080	-35.23	-1.03	-0.01
84	SLU 56	84	27	3045	-21.45	2.51	0

Nodo	Cont.	Reazione a traslazione			Reazione a rotazione		
Ind.	N.br.	x	y	z	x	y	z
84	SLU 57	40	34	3082	-29.95	0.08	-0.01
84	SLU 58	78	26	3032	-21.24	2.25	0
84	SLU 59	35	33	3069	-29.75	-0.18	-0.01
84	SLU 60	107	27	3127	-21.68	3.74	0
84	SLU 61	63	34	3164	-30.19	1.31	-0.01
84	SLU 62	93	27	3141	-21.87	2.97	0
84	SLU 63	50	34	3178	-30.38	0.54	-0.01
84	SLU 64	111	26	2955	-20.81	4.08	0
84	SLU 65	39	37	3017	-34.99	0.03	-0.01
84	SLU 66	102	26	2982	-21.2	3.57	0
84	SLU 67	59	33	3019	-29.71	1.14	-0.01
84	SLU 68	25	38	3031	-35.17	-0.74	-0.01
84	SLU 69	89	27	2996	-21.39	2.8	0
84	SLU 70	45	34	3033	-29.9	0.37	-0.01
84	SLU 71	84	26	2983	-21.19	2.54	0
84	SLU 72	40	33	3020	-29.69	0.11	-0.01
84	SLU 73	41	40	3304	-36.89	-0.08	-0.01
84	SLU 74	104	29	3268	-23.1	3.46	0
84	SLU 75	61	36	3306	-31.61	1.03	-0.01
84	SLU 76	27	40	3318	-37.08	-0.85	-0.01
84	SLU 77	90	29	3282	-23.29	2.69	0
84	SLU 78	47	36	3320	-31.8	0.26	-0.01
84	SLU 79	85	29	3270	-23.09	2.43	0
84	SLU 80	42	36	3307	-31.6	0	-0.01
84	SLU 81	113	29	3365	-23.53	3.92	0
84	SLU 82	70	36	3402	-32.03	1.49	-0.01
84	SLU 83	100	30	3379	-23.71	3.15	0
84	SLU 84	56	36	3416	-32.22	0.72	-0.01
84	SLE RA 1	84	19	2221	-15.6	3.1	0
84	SLE RA 2	36	27	2262	-25.05	0.4	0
84	SLE RA 3	78	20	2239	-15.86	2.76	0
84	SLE RA 4	49	24	2263	-21.53	1.14	0
84	SLE RA 5	27	27	2272	-25.18	-0.11	0
84	SLE RA 6	69	20	2248	-15.99	2.24	0
84	SLE RA 7	40	25	2273	-21.66	0.62	0
84	SLE RA 8	66	20	2240	-15.85	2.07	0
84	SLE RA 9	37	24	2264	-21.52	0.45	0
84	SLE RA 10	37	29	2454	-26.32	0.33	0
84	SLE RA 11	79	21	2430	-17.13	2.68	0
84	SLE RA 12	50	26	2455	-22.8	1.06	0
84	SLE RA 13	28	29	2463	-26.45	-0.19	0
84	SLE RA 14	70	21	2439	-17.26	2.17	0
84	SLE RA 15	41	26	2464	-22.93	0.55	0
84	SLE RA 16	67	21	2431	-17.12	2	0
84	SLE RA 17	38	26	2456	-22.79	0.38	0
84	SLE RA 18	85	22	2494	-17.41	2.99	0
84	SLE RA 19	57	26	2519	-23.08	1.37	0
84	SLE RA 20	76	22	2504	-17.54	2.48	0
84	SLE RA 21	47	26	2528	-23.21	0.86	0
84	SLE FR 1	84	19	2221	-15.6	3.1	0
84	SLE FR 2	74	21	2229	-17.49	2.56	0
84	SLE FR 3	80	19	2225	-15.65	2.89	0
84	SLE FR 4	75	22	2311	-18.03	2.53	0
84	SLE FR 5	81	20	2307	-16.19	2.86	0
84	SLE FR 6	85	21	2358	-16.51	3.04	0
84	SLE QP 1	84	19	2221	-15.6	3.1	0
84	SLE QP 2	84	20	2303	-16.14	3.07	0
84	SLD 1	892	21	2170	-17.91	47.39	0
84	SLD 2	892	21	2170	-17.91	47.39	0
84	SLD 3	793	0	1944	5.08	41.99	0.01
84	SLD 4	793	0	1944	5.08	41.99	0.01
84	SLD 5	476	52	2606	-51.54	24.56	-0.01
84	SLD 6	476	52	2606	-51.54	24.56	-0.01
84	SLD 7	147	-18	1852	25.09	6.55	0.01
84	SLD 8	147	-18	1852	25.09	6.55	0.01
84	SLD 9	21	58	2754	-57.37	-0.42	-0.01
84	SLD 10	21	58	2754	-57.37	-0.42	-0.01
84	SLD 11	-308	-12	2000	19.25	-18.43	0
84	SLD 12	-308	-12	2000	19.25	-18.43	0
84	SLD 13	-625	40	2662	-37.37	-35.86	-0.01
84	SLD 14	-625	40	2662	-37.37	-35.86	-0.01
84	SLD 15	-723	20	2436	-14.38	-41.26	-0.01
84	SLD 16	-723	20	2436	-14.38	-41.26	-0.01
84	SLV 1	1980	22	1998	-20.84	107.14	0.01
84	SLV 2	1980	22	1998	-20.84	107.14	0.01
84	SLV 3	1735	-30	1441	36.45	93.69	0.02
84	SLV 4	1735	-30	1441	36.45	93.69	0.02
84	SLV 5	1025	99	3056	-104.46	54.68	-0.02
84	SLV 6	1025	99	3056	-104.46	54.68	-0.02
84	SLV 7	208	-73	1200	86.54	9.87	0.02
84	SLV 8	208	-73	1200	86.54	9.87	0.02
84	SLV 9	-39	113	3406	-118.82	-3.74	-0.03
84	SLV 10	-39	113	3406	-118.82	-3.74	-0.03
84	SLV 11	-856	-59	1550	72.17	-48.55	0.01
84	SLV 12	-856	-59	1550	72.17	-48.55	0.01
84	SLV 13	-1566	70	3165	-68.74	-87.56	-0.03
84	SLV 14	-1566	70	3165	-68.74	-87.56	-0.03
84	SLV 15	-1812	18	2608	-11.44	-101.01	-0.01
84	SLV 16	-1812	18	2608	-11.44	-101.01	-0.01
85	SLU 1	168	18	2420	-13.94	7.06	0.05

Nodo	Cont.	Reazione a traslazione			Reazione a rotazione		
Ind.	N.br.	x	y	z	x	y	z
85	SLU 2	103	28	2515	-26.26	3.33	0.07
85	SLU 3	164	19	2454	-14.3	6.75	0.05
85	SLU 4	124	25	2511	-21.7	4.51	0.06
85	SLU 5	92	29	2533	-26.44	2.72	0.07
85	SLU 6	153	19	2471	-14.48	6.14	0.05
85	SLU 7	113	25	2528	-21.87	3.9	0.06
85	SLU 8	147	19	2455	-14.29	5.84	0.05
85	SLU 9	107	25	2513	-21.68	3.6	0.06
85	SLU 10	115	31	2837	-28.02	3.74	0.08
85	SLU 11	176	21	2776	-16.06	7.16	0.06
85	SLU 12	136	27	2833	-23.46	4.93	0.07
85	SLU 13	104	31	2855	-28.2	3.14	0.08
85	SLU 14	165	21	2794	-16.24	6.56	0.06
85	SLU 15	125	27	2851	-23.63	4.32	0.07
85	SLU 16	159	21	2778	-16.04	6.26	0.06
85	SLU 17	119	27	2835	-23.44	4.02	0.07
85	SLU 18	185	22	2880	-16.45	7.65	0.06
85	SLU 19	146	28	2937	-23.84	5.41	0.07
85	SLU 20	175	22	2898	-16.62	7.04	0.06
85	SLU 21	135	28	2955	-24.02	4.8	0.07
85	SLU 22	185	21	2692	-15.65	7.75	0.05
85	SLU 23	120	31	2787	-27.97	4.02	0.08
85	SLU 24	181	21	2726	-16.01	7.44	0.06
85	SLU 25	141	27	2783	-23.41	5.2	0.07
85	SLU 26	109	31	2805	-28.15	3.41	0.08
85	SLU 27	170	21	2744	-16.19	6.83	0.06
85	SLU 28	131	27	2801	-23.58	4.6	0.07
85	SLU 29	164	21	2728	-16	6.53	0.06
85	SLU 30	125	27	2785	-23.39	4.3	0.07
85	SLU 31	132	33	3109	-29.73	4.43	0.08
85	SLU 32	193	23	3048	-17.77	7.85	0.06
85	SLU 33	153	29	3105	-25.16	5.62	0.08
85	SLU 34	121	33	3127	-29.9	3.83	0.08
85	SLU 35	182	24	3066	-17.94	7.25	0.06
85	SLU 36	143	30	3123	-25.34	5.01	0.08
85	SLU 37	176	23	3050	-17.75	6.95	0.06
85	SLU 38	136	29	3107	-25.15	4.71	0.07
85	SLU 39	202	24	3152	-18.16	8.34	0.06
85	SLU 40	163	30	3209	-25.55	6.1	0.08
85	SLU 41	192	24	3170	-18.33	7.73	0.06
85	SLU 42	152	30	3227	-25.73	5.49	0.08
85	SLU 43	213	23	3053	-17.53	8.94	0.06
85	SLU 44	147	33	3148	-29.86	5.21	0.08
85	SLU 45	208	24	3086	-17.9	8.63	0.06
85	SLU 46	169	30	3143	-25.29	6.39	0.08
85	SLU 47	136	33	3165	-30.03	4.6	0.08
85	SLU 48	197	24	3104	-18.07	8.02	0.06
85	SLU 49	158	30	3161	-25.47	5.78	0.08
85	SLU 50	191	23	3088	-17.88	7.72	0.06
85	SLU 51	152	29	3145	-25.28	5.49	0.08
85	SLU 52	159	35	3470	-31.62	5.62	0.09
85	SLU 53	220	26	3409	-19.66	9.04	0.07
85	SLU 54	181	32	3466	-27.05	6.81	0.08
85	SLU 55	148	36	3488	-31.79	5.02	0.09
85	SLU 56	209	26	3426	-19.83	8.44	0.07
85	SLU 57	170	32	3483	-27.23	6.2	0.08
85	SLU 58	203	26	3410	-19.64	8.14	0.07
85	SLU 59	164	32	3467	-27.04	5.9	0.08
85	SLU 60	230	26	3513	-20.04	9.53	0.07
85	SLU 61	191	32	3570	-27.44	7.29	0.08
85	SLU 62	219	27	3531	-20.22	8.92	0.07
85	SLU 63	180	33	3588	-27.61	6.68	0.08
85	SLU 64	230	25	3325	-19.24	9.63	0.07
85	SLU 65	164	35	3420	-31.57	5.9	0.09
85	SLU 66	225	26	3358	-19.61	9.32	0.07
85	SLU 67	186	32	3416	-27	7.08	0.08
85	SLU 68	154	36	3438	-31.74	5.29	0.09
85	SLU 69	215	26	3376	-19.78	8.71	0.07
85	SLU 70	175	32	3433	-27.18	6.48	0.08
85	SLU 71	208	26	3360	-19.59	8.41	0.07
85	SLU 72	169	32	3417	-26.99	6.18	0.08
85	SLU 73	176	38	3742	-33.33	6.31	0.1
85	SLU 74	237	28	3681	-21.36	9.74	0.07
85	SLU 75	198	34	3738	-28.76	7.5	0.09
85	SLU 76	166	38	3760	-33.5	5.71	0.1
85	SLU 77	227	28	3698	-21.54	9.13	0.07
85	SLU 78	187	34	3756	-28.93	6.89	0.09
85	SLU 79	220	28	3682	-21.35	8.83	0.07
85	SLU 80	181	34	3740	-28.74	6.59	0.09
85	SLU 81	247	29	3785	-21.75	10.22	0.08
85	SLU 82	208	35	3842	-29.15	7.98	0.09
85	SLU 83	236	29	3803	-21.93	9.61	0.08
85	SLU 84	197	35	3860	-29.32	7.38	0.09
85	SLE RA 1	173	19	2498	-14.43	7.26	0.05
85	SLE RA 2	129	26	2561	-22.64	4.77	0.06
85	SLE RA 3	170	19	2520	-14.67	7.05	0.05
85	SLE RA 4	144	23	2558	-19.6	5.56	0.06
85	SLE RA 5	122	26	2573	-22.76	4.36	0.07
85	SLE RA 6	163	19	2532	-14.79	6.64	0.05
85	SLE RA 7	137	23	2570	-19.72	5.15	0.06

Nodo	Cont.	Reazione a traslazione			Reazione a rotazione		
Ind.	N.br.	x	y	z	x	y	z
85	SLE RA 8	159	19	2521	-14.66	6.45	0.05
85	SLE RA 9	133	23	2559	-19.59	4.95	0.06
85	SLE RA 10	137	27	2776	-23.81	5.05	0.07
85	SLE RA 11	178	21	2735	-15.84	7.33	0.06
85	SLE RA 12	152	25	2773	-20.77	5.83	0.06
85	SLE RA 13	130	27	2788	-23.93	4.64	0.07
85	SLE RA 14	171	21	2747	-15.96	6.92	0.06
85	SLE RA 15	145	25	2785	-20.89	5.43	0.06
85	SLE RA 16	167	21	2736	-15.83	6.72	0.05
85	SLE RA 17	140	25	2774	-20.76	5.23	0.06
85	SLE RA 18	185	21	2805	-16.1	7.65	0.06
85	SLE RA 19	158	25	2843	-21.03	6.16	0.06
85	SLE RA 20	177	21	2816	-16.22	7.24	0.06
85	SLE RA 21	151	25	2854	-21.15	5.75	0.07
85	SLE FR 1	173	19	2498	-14.43	7.26	0.05
85	SLE FR 2	164	20	2510	-16.07	6.76	0.05
85	SLE FR 3	170	19	2502	-14.47	7.09	0.05
85	SLE FR 4	168	21	2602	-16.57	6.88	0.05
85	SLE FR 5	174	20	2594	-14.97	7.21	0.05
85	SLE FR 6	179	20	2651	-15.26	7.45	0.05
85	SLE QP 1	173	19	2498	-14.43	7.26	0.05
85	SLE QP 2	177	20	2590	-14.93	7.37	0.05
85	SLD 1	887	20	2384	-16.08	45.96	0.1
85	SLD 2	887	20	2384	-16.08	45.96	0.1
85	SLD 3	792	1	2170	3.87	40.89	0.05
85	SLD 4	792	1	2170	3.87	40.89	0.05
85	SLD 5	533	47	2852	-45.53	26.65	0.13
85	SLD 6	533	47	2852	-45.53	26.65	0.13
85	SLD 7	218	-13	2140	20.96	9.72	-0.01
85	SLD 8	218	-13	2140	20.96	9.72	-0.01
85	SLD 9	136	53	3039	-50.82	5.02	0.12
85	SLD 10	136	53	3039	-50.82	5.02	0.12
85	SLD 11	-180	-8	2328	15.67	-11.91	-0.03
85	SLD 12	-180	-8	2328	15.67	-11.91	-0.03
85	SLD 13	-439	38	3009	-33.72	-26.14	0.05
85	SLD 14	-439	38	3009	-33.72	-26.14	0.05
85	SLD 15	-534	20	2796	-13.77	-31.22	0
85	SLD 16	-534	20	2796	-13.77	-31.22	0
85	SLV 1	1843	20	2111	-17.98	97.92	0.17
85	SLV 2	1843	20	2111	-17.98	97.92	0.17
85	SLV 3	1612	-25	1596	31.68	85.43	0.06
85	SLV 4	1612	-25	1596	31.68	85.43	0.06
85	SLV 5	1028	88	3228	-91.16	53.5	0.25
85	SLV 6	1028	88	3228	-91.16	53.5	0.25
85	SLV 7	255	-62	1510	74.37	11.83	-0.11
85	SLV 8	255	-62	1510	74.37	11.83	-0.11
85	SLV 9	98	101	3670	-104.22	2.91	0.21
85	SLV 10	98	101	3670	-104.22	2.91	0.21
85	SLV 11	-675	-48	1951	61.3	-38.75	-0.15
85	SLV 12	-675	-48	1951	61.3	-38.75	-0.15
85	SLV 13	-1258	65	3584	-61.53	-70.68	0.04
85	SLV 14	-1258	65	3584	-61.53	-70.68	0.04
85	SLV 15	-1490	20	3068	-11.88	-83.18	-0.06
85	SLV 16	-1490	20	3068	-11.88	-83.18	-0.06
86	SLU 1	206	16	2802	-12.12	6.93	0.06
86	SLU 2	139	24	2955	-22	2.88	0.07
86	SLU 3	204	17	2847	-12.44	6.74	0.06
86	SLU 4	164	21	2939	-18.37	4.31	0.07
86	SLU 5	130	24	2980	-22.15	2.38	0.08
86	SLU 6	196	17	2872	-12.59	6.24	0.06
86	SLU 7	156	21	2964	-18.52	3.81	0.07
86	SLU 8	189	17	2851	-12.43	5.93	0.06
86	SLU 9	149	21	2943	-18.35	3.5	0.07
86	SLU 10	152	26	3328	-23.54	3.05	0.08
86	SLU 11	217	19	3220	-13.98	6.9	0.06
86	SLU 12	177	23	3312	-19.9	4.47	0.08
86	SLU 13	143	26	3352	-23.69	2.55	0.08
86	SLU 14	209	19	3245	-14.13	6.4	0.07
86	SLU 15	169	24	3337	-20.06	3.97	0.08
86	SLU 16	202	19	3224	-13.97	6.09	0.06
86	SLU 17	162	23	3316	-19.89	3.67	0.08
86	SLU 18	225	19	3334	-14.32	7.17	0.07
86	SLU 19	184	24	3426	-20.24	4.74	0.08
86	SLU 20	216	20	3359	-14.47	6.67	0.07
86	SLU 21	176	24	3451	-20.4	4.24	0.08
86	SLU 22	226	18	3123	-13.62	7.49	0.06
86	SLU 23	159	26	3276	-23.49	3.44	0.08
86	SLU 24	224	19	3168	-13.94	7.29	0.06
86	SLU 25	184	23	3260	-19.86	4.86	0.08
86	SLU 26	150	26	3301	-23.64	2.94	0.08
86	SLU 27	216	19	3193	-14.09	6.79	0.07
86	SLU 28	176	24	3285	-20.01	4.36	0.08
86	SLU 29	209	19	3172	-13.92	6.48	0.06
86	SLU 30	169	23	3264	-19.85	4.06	0.08
86	SLU 31	172	28	3649	-25.03	3.61	0.09
86	SLU 32	238	21	3541	-15.47	7.46	0.07
86	SLU 33	197	25	3633	-21.4	5.03	0.08
86	SLU 34	164	28	3673	-25.18	3.11	0.09
86	SLU 35	229	21	3566	-15.63	6.96	0.07
86	SLU 36	189	26	3658	-21.55	4.53	0.08

Nodo	Cont.	Reazione a traslazione			Reazione a rotazione		
Ind.	N.br.	x	y	z	x	y	z
86	SLU 37	222	21	3545	-15.46	6.65	0.07
86	SLU 38	182	25	3637	-21.38	4.22	0.08
86	SLU 39	245	21	3655	-15.82	7.72	0.07
86	SLU 40	204	26	3747	-21.74	5.3	0.08
86	SLU 41	236	22	3680	-15.97	7.22	0.07
86	SLU 42	196	26	3772	-21.89	4.8	0.09
86	SLU 43	260	21	3532	-15.25	8.81	0.07
86	SLU 44	193	28	3685	-25.12	4.77	0.09
86	SLU 45	259	21	3578	-15.57	8.62	0.07
86	SLU 46	219	26	3670	-21.49	6.19	0.08
86	SLU 47	185	28	3710	-25.27	4.27	0.09
86	SLU 48	251	21	3603	-15.72	8.12	0.07
86	SLU 49	210	26	3695	-21.64	5.69	0.08
86	SLU 50	244	21	3582	-15.55	7.81	0.07
86	SLU 51	204	25	3674	-21.48	5.39	0.08
86	SLU 52	207	30	4058	-26.66	4.93	0.1
86	SLU 53	272	23	3950	-17.11	8.79	0.08
86	SLU 54	232	28	4042	-23.03	6.36	0.09
86	SLU 55	198	30	4083	-26.81	4.43	0.1
86	SLU 56	264	23	3975	-17.26	8.29	0.08
86	SLU 57	224	28	4067	-23.18	5.86	0.09
86	SLU 58	257	23	3954	-17.09	7.98	0.08
86	SLU 59	217	28	4046	-23.01	5.55	0.09
86	SLU 60	279	24	4064	-17.45	9.05	0.08
86	SLU 61	239	28	4156	-23.37	6.63	0.09
86	SLU 62	271	24	4089	-17.6	8.55	0.08
86	SLU 63	231	28	4181	-23.52	6.13	0.09
86	SLU 64	281	23	3853	-16.74	9.37	0.08
86	SLU 65	213	30	4007	-26.62	5.32	0.1
86	SLU 66	279	23	3899	-17.06	9.18	0.08
86	SLU 67	239	28	3991	-22.99	6.75	0.09
86	SLU 68	205	30	4031	-26.77	4.82	0.1
86	SLU 69	271	23	3924	-17.21	8.68	0.08
86	SLU 70	231	28	4016	-23.14	6.25	0.09
86	SLU 71	264	23	3903	-17.05	8.37	0.08
86	SLU 72	224	28	3995	-22.97	5.94	0.09
86	SLU 73	227	32	4379	-28.15	5.49	0.1
86	SLU 74	292	25	4271	-18.6	9.35	0.09
86	SLU 75	252	30	4363	-24.52	6.92	0.1
86	SLU 76	218	32	4404	-28.31	4.99	0.1
86	SLU 77	284	25	4296	-18.75	8.85	0.09
86	SLU 78	244	30	4388	-24.68	6.42	0.1
86	SLU 79	277	25	4275	-18.58	8.54	0.09
86	SLU 80	237	30	4367	-24.51	6.11	0.1
86	SLU 81	299	26	4385	-18.94	9.61	0.09
86	SLU 82	259	30	4477	-24.86	7.18	0.1
86	SLU 83	291	26	4410	-19.09	9.11	0.09
86	SLU 84	251	30	4502	-25.02	6.68	0.1
86	SLE RA 1	211	17	2893	-12.55	7.09	0.06
86	SLE RA 2	167	22	2996	-19.13	4.39	0.07
86	SLE RA 3	210	17	2924	-12.76	6.96	0.06
86	SLE RA 4	184	20	2985	-16.71	5.34	0.07
86	SLE RA 5	161	22	3012	-19.23	4.06	0.07
86	SLE RA 6	205	17	2940	-12.86	6.63	0.06
86	SLE RA 7	178	20	3002	-16.81	5.01	0.07
86	SLE RA 8	200	17	2926	-12.75	6.42	0.06
86	SLE RA 9	174	20	2988	-16.7	4.8	0.07
86	SLE RA 10	175	23	3244	-20.16	4.5	0.08
86	SLE RA 11	219	19	3172	-13.79	7.07	0.06
86	SLE RA 12	192	22	3234	-17.74	5.45	0.07
86	SLE RA 13	170	24	3261	-20.26	4.17	0.08
86	SLE RA 14	214	19	3189	-13.89	6.74	0.06
86	SLE RA 15	187	22	3250	-17.84	5.12	0.07
86	SLE RA 16	209	19	3175	-13.78	6.53	0.06
86	SLE RA 17	182	22	3236	-17.73	4.91	0.07
86	SLE RA 18	224	19	3248	-14.02	7.25	0.07
86	SLE RA 19	197	22	3310	-17.96	5.63	0.07
86	SLE RA 20	218	19	3265	-14.12	6.91	0.07
86	SLE RA 21	192	22	3326	-18.07	5.29	0.07
86	SLE FR 1	211	17	2893	-12.55	7.09	0.06
86	SLE FR 2	202	18	2914	-13.87	6.55	0.06
86	SLE FR 3	209	17	2900	-12.59	6.95	0.06
86	SLE FR 4	206	19	3020	-14.31	6.6	0.06
86	SLE FR 5	213	18	3006	-13.03	7	0.06
86	SLE FR 6	218	18	3071	-13.28	7.17	0.06
86	SLE QP 1	211	17	2893	-12.55	7.09	0.06
86	SLE QP 2	215	18	3000	-12.99	7.13	0.06
86	SLD 1	842	16	2640	-13.43	41.3	0.11
86	SLD 2	842	16	2640	-13.43	41.3	0.11
86	SLD 3	744	2	2391	2.52	36.44	0.07
86	SLD 4	744	2	2391	2.52	36.44	0.07
86	SLD 5	551	38	3269	-37.31	24.75	0.13
86	SLD 6	551	38	3269	-37.31	24.75	0.13
86	SLD 7	226	-8	2440	15.85	8.56	0
86	SLD 8	226	-8	2440	15.85	8.56	0
86	SLD 9	204	43	3560	-41.83	5.71	0.12
86	SLD 10	204	43	3560	-41.83	5.71	0.12
86	SLD 11	-121	-3	2730	11.33	-10.48	-0.01
86	SLD 12	-121	-3	2730	11.33	-10.48	-0.01
86	SLD 13	-314	33	3608	-28.5	-22.17	0.05

Nodo	Cont.	Reazione a traslazione			Reazione a rotazione		
Ind.	N.br.	x	y	z	x	y	z
86	SLD 14	-314	33	3608	-28.5	-22.17	0.05
86	SLD 15	-411	19	3359	-12.55	-27.03	0.01
86	SLD 16	-411	19	3359	-12.55	-27.03	0.01
86	SLV 1	1684	14	2159	-14.15	87.26	0.18
86	SLV 2	1684	14	2159	-14.15	87.26	0.18
86	SLV 3	1449	-20	1572	25.49	75.4	0.08
86	SLV 4	1449	-20	1572	25.49	75.4	0.08
86	SLV 5	1013	69	3639	-73.46	49.16	0.24
86	SLV 6	1013	69	3639	-73.46	49.16	0.24
86	SLV 7	228	-46	1680	58.67	9.62	-0.08
86	SLV 8	228	-46	1680	58.67	9.62	-0.08
86	SLV 9	202	81	4319	-84.65	4.65	0.2
86	SLV 10	202	81	4319	-84.65	4.65	0.2
86	SLV 11	-582	-34	2361	47.48	-34.89	-0.12
86	SLV 12	-582	-34	2361	47.48	-34.89	-0.12
86	SLV 13	-1018	55	4428	-51.47	-61.13	0.04
86	SLV 14	-1018	55	4428	-51.47	-61.13	0.04
86	SLV 15	-1253	21	3840	-11.83	-72.99	-0.06
86	SLV 16	-1253	21	3840	-11.83	-72.99	-0.06
87	SLU 1	210	12	3290	-9.46	8.48	0.03
87	SLU 2	142	17	3523	-16.48	4.59	0.04
87	SLU 3	211	12	3352	-9.71	8.43	0.03
87	SLU 4	170	15	3492	-13.92	6.1	0.03
87	SLU 5	136	17	3558	-16.6	4.21	0.04
87	SLU 6	205	12	3387	-9.83	8.06	0.03
87	SLU 7	164	15	3527	-14.04	5.72	0.03
87	SLU 8	198	12	3360	-9.7	7.73	0.03
87	SLU 9	157	15	3500	-13.91	5.4	0.03
87	SLU 10	154	18	3959	-17.69	4.92	0.04
87	SLU 11	223	14	3788	-10.92	8.77	0.04
87	SLU 12	182	17	3928	-15.13	6.43	0.04
87	SLU 13	147	18	3994	-17.81	4.55	0.04
87	SLU 14	217	14	3823	-11.04	8.4	0.04
87	SLU 15	176	17	3963	-15.25	6.06	0.04
87	SLU 16	210	14	3796	-10.91	8.07	0.04
87	SLU 17	169	17	3936	-15.12	5.73	0.04
87	SLU 18	227	14	3912	-11.19	8.96	0.04
87	SLU 19	186	17	4052	-15.4	6.63	0.04
87	SLU 20	221	14	3947	-11.31	8.59	0.04
87	SLU 21	180	17	4087	-15.52	6.25	0.04
87	SLU 22	231	13	3673	-10.63	9.24	0.03
87	SLU 23	162	18	3906	-17.65	5.34	0.04
87	SLU 24	231	14	3735	-10.88	9.19	0.04
87	SLU 25	190	17	3875	-15.1	6.85	0.04
87	SLU 26	156	18	3941	-17.77	4.97	0.04
87	SLU 27	225	14	3770	-11	8.82	0.04
87	SLU 28	184	17	3910	-15.21	6.48	0.04
87	SLU 29	218	14	3743	-10.87	8.49	0.04
87	SLU 30	177	17	3883	-15.08	6.15	0.04
87	SLU 31	174	20	4342	-18.86	5.68	0.04
87	SLU 32	243	15	4171	-12.1	9.53	0.04
87	SLU 33	202	18	4311	-16.31	7.19	0.04
87	SLU 34	167	20	4377	-18.98	5.31	0.04
87	SLU 35	237	16	4206	-12.21	9.16	0.04
87	SLU 36	196	18	4346	-16.43	6.82	0.04
87	SLU 37	230	15	4179	-12.08	8.83	0.04
87	SLU 38	189	18	4318	-16.29	6.49	0.04
87	SLU 39	247	16	4295	-12.36	9.72	0.04
87	SLU 40	206	19	4435	-16.58	7.39	0.04
87	SLU 41	241	16	4330	-12.48	9.35	0.04
87	SLU 42	200	19	4470	-16.69	7.01	0.04
87	SLU 43	267	15	4146	-11.89	10.76	0.04
87	SLU 44	198	20	4378	-18.91	6.87	0.04
87	SLU 45	268	15	4208	-12.14	10.72	0.04
87	SLU 46	226	18	4348	-16.35	8.38	0.04
87	SLU 47	192	20	4414	-19.03	6.5	0.04
87	SLU 48	261	15	4243	-12.26	10.34	0.04
87	SLU 49	220	18	4383	-16.47	8.01	0.04
87	SLU 50	254	15	4216	-12.13	10.02	0.04
87	SLU 51	213	18	4355	-16.34	7.68	0.04
87	SLU 52	210	21	4814	-20.12	7.21	0.05
87	SLU 53	279	17	4644	-13.35	11.05	0.04
87	SLU 54	238	20	4783	-17.57	8.72	0.05
87	SLU 55	204	21	4849	-20.24	6.83	0.05
87	SLU 56	273	17	4679	-13.47	10.68	0.04
87	SLU 57	232	20	4819	-17.68	8.34	0.05
87	SLU 58	266	17	4651	-13.34	10.35	0.04
87	SLU 59	225	20	4791	-17.55	8.02	0.05
87	SLU 60	283	17	4768	-13.62	11.25	0.04
87	SLU 61	242	20	4908	-17.83	8.91	0.05
87	SLU 62	277	17	4803	-13.74	10.87	0.04
87	SLU 63	236	20	4943	-17.95	8.54	0.05
87	SLU 64	287	17	4528	-13.07	11.52	0.04
87	SLU 65	218	21	4761	-20.09	7.63	0.05
87	SLU 66	288	17	4591	-13.32	11.47	0.04
87	SLU 67	247	20	4731	-17.53	9.14	0.05
87	SLU 68	212	21	4796	-20.21	7.25	0.05
87	SLU 69	281	17	4626	-13.44	11.1	0.04
87	SLU 70	240	20	4766	-17.65	8.76	0.05
87	SLU 71	274	17	4599	-13.31	10.77	0.04

Nodo	Cont.	Reazione a traslazione			Reazione a rotazione		
Ind.	N.br.	x	y	z	x	y	z
87	SLU 72	233	20	4738	-17.52	8.44	0.05
87	SLU 73	230	23	5197	-21.3	7.97	0.05
87	SLU 74	299	18	5027	-14.53	11.81	0.05
87	SLU 75	258	21	5166	-18.74	9.48	0.05
87	SLU 76	224	23	5232	-21.42	7.59	0.05
87	SLU 77	293	19	5062	-14.65	11.44	0.05
87	SLU 78	252	21	5201	-18.86	9.1	0.05
87	SLU 79	286	18	5034	-14.52	11.11	0.05
87	SLU 80	245	21	5174	-18.73	8.78	0.05
87	SLU 81	303	19	5151	-14.8	12.01	0.05
87	SLU 82	262	22	5291	-19.01	9.67	0.05
87	SLU 83	297	19	5186	-14.92	11.63	0.05
87	SLU 84	256	22	5326	-19.13	9.3	0.05
87	SLE RA 1	216	12	3399	-9.79	8.7	0.03
87	SLE RA 2	171	16	3555	-14.47	6.1	0.04
87	SLE RA 3	217	13	3441	-9.96	8.66	0.03
87	SLE RA 4	189	14	3534	-12.77	7.11	0.03
87	SLE RA 5	166	16	3578	-14.55	5.85	0.04
87	SLE RA 6	213	13	3464	-10.04	8.42	0.03
87	SLE RA 7	185	15	3557	-12.85	6.86	0.03
87	SLE RA 8	208	13	3446	-9.95	8.2	0.03
87	SLE RA 9	181	14	3539	-12.76	6.64	0.03
87	SLE RA 10	178	17	3845	-15.28	6.33	0.04
87	SLE RA 11	224	14	3731	-10.77	8.89	0.04
87	SLE RA 12	197	16	3825	-13.58	7.33	0.04
87	SLE RA 13	174	17	3868	-15.36	6.08	0.04
87	SLE RA 14	220	14	3755	-10.85	8.64	0.04
87	SLE RA 15	193	16	3848	-13.66	7.08	0.04
87	SLE RA 16	216	14	3737	-10.76	8.42	0.03
87	SLE RA 17	188	16	3830	-13.57	6.87	0.04
87	SLE RA 18	227	14	3814	-10.95	9.02	0.04
87	SLE RA 19	200	16	3908	-13.76	7.46	0.04
87	SLE RA 20	223	14	3838	-11.03	8.77	0.04
87	SLE RA 21	196	16	3931	-13.83	7.21	0.04
87	SLE FR 1	216	12	3399	-9.79	8.7	0.03
87	SLE FR 2	207	13	3430	-10.73	8.18	0.03
87	SLE FR 3	215	12	3409	-9.83	8.6	0.03
87	SLE FR 4	210	13	3555	-11.08	8.27	0.03
87	SLE FR 5	218	13	3533	-10.17	8.69	0.03
87	SLE FR 6	222	13	3607	-10.37	8.86	0.03
87	SLE QP 1	216	12	3399	-9.79	8.7	0.03
87	SLE QP 2	220	13	3524	-10.14	8.79	0.03
87	SLD 1	768	9	2936	-9.83	38.22	0.07
87	SLD 2	768	9	2936	-9.83	38.22	0.07
87	SLD 3	666	1	2570	1.41	33.27	0.05
87	SLD 4	666	1	2570	1.41	33.27	0.05
87	SLD 5	538	25	3902	-27.1	25.13	0.07
87	SLD 6	538	25	3902	-27.1	25.13	0.07
87	SLD 7	200	-4	2683	10.38	8.63	0.02
87	SLD 8	200	-4	2683	10.38	8.63	0.02
87	SLD 9	239	30	4365	-30.66	8.96	0.05
87	SLD 10	239	30	4365	-30.66	8.96	0.05
87	SLD 11	-99	0	3145	6.82	-7.54	0
87	SLD 12	-99	0	3145	6.82	-7.54	0
87	SLD 13	-227	25	4477	-21.69	-15.68	0.01
87	SLD 14	-227	25	4477	-21.69	-15.68	0.01
87	SLD 15	-329	16	4112	-10.45	-20.63	0
87	SLD 16	-329	16	4112	-10.45	-20.63	0
87	SLV 1	1503	5	2152	-9.37	77.76	0.11
87	SLV 2	1503	5	2152	-9.37	77.76	0.11
87	SLV 3	1261	-17	1287	18.53	65.82	0.08
87	SLV 4	1261	-17	1287	18.53	65.82	0.08
87	SLV 5	972	43	4424	-52.22	47.6	0.11
87	SLV 6	972	43	4424	-52.22	47.6	0.11
87	SLV 7	164	-29	1541	40.77	7.78	-0.01
87	SLV 8	164	-29	1541	40.77	7.78	-0.01
87	SLV 9	275	55	5507	-61.05	9.8	0.07
87	SLV 10	275	55	5507	-61.05	9.8	0.07
87	SLV 11	-533	-17	2623	31.94	-30.02	-0.05
87	SLV 12	-533	-17	2623	31.94	-30.02	-0.05
87	SLV 13	-822	43	5760	-38.81	-48.23	-0.01
87	SLV 14	-822	43	5760	-38.81	-48.23	-0.01
87	SLV 15	-1064	21	4895	-10.91	-60.18	-0.05
87	SLV 16	-1064	21	4895	-10.91	-60.18	-0.05
88	SLU 1	135	7	3904	-6.49	-0.78	0.01
88	SLU 2	56	9	4236	-10.56	-5.54	0.01
88	SLU 3	136	7	3988	-6.66	-0.97	0.01
88	SLU 4	89	8	4187	-9.11	-3.82	0.01
88	SLU 5	51	9	4285	-10.65	-5.96	0.01
88	SLU 6	131	7	4037	-6.75	-1.38	0.01
88	SLU 7	83	8	4237	-9.19	-4.24	0.01
88	SLU 8	124	7	4002	-6.66	-1.61	0.01
88	SLU 9	77	8	4201	-9.1	-4.47	0.01
88	SLU 10	56	10	4752	-11.4	-6.56	0.02
88	SLU 11	136	8	4504	-7.5	-1.98	0.01
88	SLU 12	88	9	4703	-9.95	-4.84	0.01
88	SLU 13	50	10	4801	-11.49	-6.97	0.02
88	SLU 14	130	8	4553	-7.59	-2.4	0.01
88	SLU 15	83	9	4752	-10.03	-5.26	0.01
88	SLU 16	124	8	4518	-7.5	-2.63	0.01

Nodo	Cont.	Reazione a traslazione			Reazione a rotazione		
Ind.	N.br.	x	y	z	x	y	z
88	SLU 17	76	9	4717	-9.94	-5.49	0.01
88	SLU 18	135	8	4641	-7.69	-2.23	0.01
88	SLU 19	87	9	4840	-10.14	-5.09	0.02
88	SLU 20	129	8	4690	-7.78	-2.65	0.01
88	SLU 21	82	9	4889	-10.22	-5.51	0.02
88	SLU 22	146	7	4365	-7.3	-1.22	0.01
88	SLU 23	67	10	4697	-11.38	-5.98	0.02
88	SLU 24	147	8	4449	-7.48	-1.41	0.01
88	SLU 25	99	9	4649	-9.92	-4.26	0.01
88	SLU 26	61	10	4747	-11.46	-6.4	0.02
88	SLU 27	141	8	4498	-7.56	-1.82	0.01
88	SLU 28	94	9	4698	-10	-4.68	0.01
88	SLU 29	135	8	4463	-7.47	-2.05	0.01
88	SLU 30	87	9	4663	-9.92	-4.91	0.01
88	SLU 31	66	11	5213	-12.22	-7	0.02
88	SLU 32	146	9	4965	-8.32	-2.42	0.01
88	SLU 33	99	10	5165	-10.76	-5.28	0.02
88	SLU 34	61	11	5262	-12.3	-7.41	0.02
88	SLU 35	141	9	5014	-8.4	-2.84	0.01
88	SLU 36	93	10	5214	-10.85	-5.7	0.02
88	SLU 37	134	9	4979	-8.31	-3.07	0.01
88	SLU 38	87	10	5179	-10.76	-5.93	0.02
88	SLU 39	145	9	5102	-8.51	-2.67	0.02
88	SLU 40	98	10	5301	-10.95	-5.53	0.02
88	SLU 41	140	9	5151	-8.59	-3.09	0.02
88	SLU 42	92	10	5351	-11.03	-5.95	0.02
88	SLU 43	172	8	4917	-8.16	-0.86	0.01
88	SLU 44	93	11	5249	-12.23	-5.62	0.02
88	SLU 45	173	8	5001	-8.33	-1.05	0.01
88	SLU 46	126	10	5200	-10.77	-3.91	0.02
88	SLU 47	87	11	5298	-12.31	-6.04	0.02
88	SLU 48	168	9	5050	-8.41	-1.47	0.01
88	SLU 49	120	10	5249	-10.86	-4.32	0.02
88	SLU 50	161	8	5015	-8.33	-1.7	0.01
88	SLU 51	114	10	5214	-10.77	-4.55	0.02
88	SLU 52	93	12	5765	-13.07	-6.64	0.02
88	SLU 53	173	9	5517	-9.17	-2.07	0.02
88	SLU 54	125	11	5716	-11.61	-4.92	0.02
88	SLU 55	87	12	5814	-13.16	-7.06	0.02
88	SLU 56	167	9	5566	-9.26	-2.48	0.02
88	SLU 57	120	11	5765	-11.7	-5.34	0.02
88	SLU 58	161	9	5531	-9.17	-2.71	0.02
88	SLU 59	113	11	5730	-11.61	-5.57	0.02
88	SLU 60	172	10	5653	-9.36	-2.32	0.02
88	SLU 61	124	11	5853	-11.8	-5.17	0.02
88	SLU 62	166	10	5703	-9.44	-2.73	0.02
88	SLU 63	119	11	5902	-11.89	-5.59	0.02
88	SLU 64	182	9	5378	-8.97	-1.3	0.02
88	SLU 65	103	12	5710	-13.04	-6.06	0.02
88	SLU 66	183	9	5462	-9.14	-1.49	0.02
88	SLU 67	136	11	5662	-11.59	-4.35	0.02
88	SLU 68	98	12	5759	-13.13	-6.48	0.02
88	SLU 69	178	9	5511	-9.23	-1.91	0.02
88	SLU 70	131	11	5711	-11.67	-4.76	0.02
88	SLU 71	172	9	5476	-9.14	-2.14	0.02
88	SLU 72	124	11	5676	-11.58	-4.99	0.02
88	SLU 73	103	12	6226	-13.89	-7.08	0.02
88	SLU 74	183	10	5978	-9.99	-2.51	0.02
88	SLU 75	136	12	6178	-12.43	-5.36	0.02
88	SLU 76	98	12	6275	-13.97	-7.5	0.02
88	SLU 77	178	10	6027	-10.07	-2.92	0.02
88	SLU 78	130	12	6227	-12.51	-5.78	0.02
88	SLU 79	171	10	5992	-9.98	-3.15	0.02
88	SLU 80	124	12	6192	-12.42	-6.01	0.02
88	SLU 81	182	10	6115	-10.17	-2.76	0.02
88	SLU 82	135	12	6314	-12.62	-5.61	0.02
88	SLU 83	177	11	6164	-10.26	-3.17	0.02
88	SLU 84	129	12	6363	-12.7	-6.03	0.02
88	SLE RA 1	138	7	4035	-6.72	-0.9	0.01
88	SLE RA 2	85	8	4257	-9.44	-4.08	0.01
88	SLE RA 3	139	7	4092	-6.84	-1.03	0.01
88	SLE RA 4	107	8	4225	-8.47	-2.93	0.01
88	SLE RA 5	82	8	4290	-9.49	-4.36	0.01
88	SLE RA 6	135	7	4124	-6.89	-1.31	0.01
88	SLE RA 7	103	8	4257	-8.52	-3.21	0.01
88	SLE RA 8	131	7	4101	-6.83	-1.46	0.01
88	SLE RA 9	99	8	4234	-8.46	-3.36	0.01
88	SLE RA 10	85	9	4601	-10	-4.76	0.01
88	SLE RA 11	139	8	4436	-7.4	-1.71	0.01
88	SLE RA 12	107	9	4569	-9.03	-3.61	0.01
88	SLE RA 13	82	9	4634	-10.05	-5.03	0.01
88	SLE RA 14	135	8	4468	-7.45	-1.99	0.01
88	SLE RA 15	103	9	4601	-9.08	-3.89	0.01
88	SLE RA 16	131	8	4445	-7.39	-2.14	0.01
88	SLE RA 17	99	9	4578	-9.02	-4.04	0.01
88	SLE RA 18	138	8	4527	-7.52	-1.87	0.01
88	SLE RA 19	106	9	4660	-9.15	-3.78	0.01
88	SLE RA 20	134	8	4560	-7.58	-2.15	0.01
88	SLE RA 21	103	9	4692	-9.21	-4.06	0.01
88	SLE FR 1	138	7	4035	-6.72	-0.9	0.01

Nodo	Cont.	Reazione a traslazione			Reazione a rotazione		
Ind.	N.br.	x	y	z	x	y	z
88	SLE FR 2	128	7	4080	-7.27	-1.54	0.01
88	SLE FR 3	137	7	4049	-6.74	-1.02	0.01
88	SLE FR 4	127	7	4227	-7.51	-1.83	0.01
88	SLE FR 5	137	7	4196	-6.98	-1.31	0.01
88	SLE FR 6	138	7	4281	-7.12	-1.39	0.01
88	SLE QP 1	138	7	4035	-6.72	-0.9	0.01
88	SLE QP 2	138	7	4183	-6.96	-1.2	0.01
88	SLD 1	636	17	3276	-6.12	26.74	0.05
88	SLD 2	636	17	3276	-6.12	26.74	0.05
88	SLD 3	537	14	2723	0.28	22.46	0.04
88	SLD 4	537	14	2723	0.28	22.46	0.04
88	SLD 5	436	16	4748	-16.42	13.69	0.03
88	SLD 6	436	16	4748	-16.42	13.69	0.03
88	SLD 7	109	3	2907	4.92	-0.6	0.01
88	SLD 8	109	3	2907	4.92	-0.6	0.01
88	SLD 9	167	11	5458	-18.84	-1.79	0.01
88	SLD 10	167	11	5458	-18.84	-1.79	0.01
88	SLD 11	-161	-2	3617	2.5	-16.08	-0.01
88	SLD 12	-161	-2	3617	2.5	-16.08	-0.01
88	SLD 13	-261	1	5642	-14.2	-24.85	-0.01
88	SLD 14	-261	1	5642	-14.2	-24.85	-0.01
88	SLD 15	-360	-3	5090	-7.8	-29.13	-0.02
88	SLD 16	-360	-3	5090	-7.8	-29.13	-0.02
88	SLV 1	1304	32	2071	-4.88	64.36	0.09
88	SLV 2	1304	32	2071	-4.88	64.36	0.09
88	SLV 3	1069	23	755	10.96	53.84	0.08
88	SLV 4	1069	23	755	10.96	53.84	0.08
88	SLV 5	845	29	5546	-30.37	34.42	0.06
88	SLV 6	845	29	5546	-30.37	34.42	0.06
88	SLV 7	60	-2	1158	22.44	-0.63	0.01
88	SLV 8	60	-2	1158	22.44	-0.63	0.01
88	SLV 9	215	17	7207	-36.37	-1.76	0.02
88	SLV 10	215	17	7207	-36.37	-1.76	0.02
88	SLV 11	-569	-15	2820	16.44	-36.81	-0.03
88	SLV 12	-569	-15	2820	16.44	-36.81	-0.03
88	SLV 13	-793	-8	7610	-24.89	-56.23	-0.05
88	SLV 14	-793	-8	7610	-24.89	-56.23	-0.05
88	SLV 15	-1028	-18	6294	-9.04	-66.75	-0.07
88	SLV 16	-1028	-18	6294	-9.04	-66.75	-0.07
89	SLU 1	-62	8	4837	-4.19	-3.85	0.08
89	SLU 2	-145	9	5325	-5.02	-9.11	0.09
89	SLU 3	-64	9	4955	-4.3	-4.05	0.08
89	SLU 4	-114	9	5247	-4.8	-7.2	0.09
89	SLU 5	-151	9	5397	-5.08	-9.5	0.09
89	SLU 6	-70	9	5026	-4.36	-4.44	0.08
89	SLU 7	-120	9	5319	-4.86	-7.59	0.09
89	SLU 8	-74	9	4981	-4.3	-4.63	0.08
89	SLU 9	-124	9	5273	-4.81	-7.79	0.09
89	SLU 10	-168	10	5971	-5.57	-10.45	0.1
89	SLU 11	-87	10	5600	-4.85	-5.39	0.09
89	SLU 12	-137	10	5893	-5.35	-8.54	0.1
89	SLU 13	-174	10	6042	-5.63	-10.84	0.1
89	SLU 14	-93	10	5672	-4.91	-5.78	0.09
89	SLU 15	-143	10	5964	-5.41	-8.93	0.1
89	SLU 16	-97	10	5627	-4.85	-5.98	0.09
89	SLU 17	-147	10	5919	-5.35	-9.13	0.1
89	SLU 18	-94	10	5760	-4.97	-5.77	0.09
89	SLU 19	-144	10	6052	-5.47	-8.92	0.1
89	SLU 20	-100	10	5831	-5.03	-6.16	0.09
89	SLU 21	-150	11	6124	-5.53	-9.31	0.1
89	SLU 22	-73	10	5421	-4.72	-4.59	0.09
89	SLU 23	-157	10	5909	-5.55	-9.84	0.1
89	SLU 24	-76	10	5538	-4.83	-4.79	0.09
89	SLU 25	-126	10	5831	-5.33	-7.94	0.1
89	SLU 26	-163	10	5980	-5.61	-10.23	0.1
89	SLU 27	-82	10	5610	-4.89	-5.18	0.09
89	SLU 28	-132	10	5903	-5.39	-8.33	0.1
89	SLU 29	-85	10	5565	-4.83	-5.37	0.09
89	SLU 30	-135	10	5857	-5.33	-8.52	0.1
89	SLU 31	-180	11	6554	-6.1	-11.18	0.11
89	SLU 32	-99	11	6184	-5.38	-6.13	0.1
89	SLU 33	-149	11	6476	-5.88	-9.28	0.11
89	SLU 34	-186	11	6626	-6.16	-11.57	0.11
89	SLU 35	-105	11	6256	-5.44	-6.52	0.1
89	SLU 36	-155	11	6548	-5.94	-9.67	0.11
89	SLU 37	-108	11	6210	-5.38	-6.71	0.1
89	SLU 38	-158	11	6503	-5.88	-9.86	0.11
89	SLU 39	-106	11	6343	-5.5	-6.5	0.1
89	SLU 40	-156	11	6636	-6	-9.66	0.11
89	SLU 41	-112	11	6415	-5.56	-6.89	0.1
89	SLU 42	-162	12	6708	-6.06	-10.05	0.11
89	SLU 43	-76	11	6088	-5.27	-4.76	0.1
89	SLU 44	-159	11	6576	-6.1	-10.01	0.11
89	SLU 45	-78	11	6206	-5.38	-4.96	0.1
89	SLU 46	-128	11	6498	-5.88	-8.11	0.11
89	SLU 47	-165	11	6648	-6.16	-10.4	0.11
89	SLU 48	-84	11	6277	-5.44	-5.35	0.1
89	SLU 49	-134	11	6570	-5.94	-8.5	0.11
89	SLU 50	-88	11	6232	-5.38	-5.54	0.1
89	SLU 51	-138	11	6525	-5.88	-8.69	0.11

Nodo	Cont.	Reazione a traslazione			Reazione a rotazione		
Ind.	N.br.	x	y	z	x	y	z
89	SLU 52	-182	12	7222	-6.65	-11.35	0.12
89	SLU 53	-101	12	6851	-5.93	-6.3	0.11
89	SLU 54	-151	12	7144	-6.43	-9.45	0.12
89	SLU 55	-188	12	7293	-6.71	-11.74	0.12
89	SLU 56	-107	12	6923	-5.98	-6.69	0.11
89	SLU 57	-157	12	7216	-6.49	-9.84	0.12
89	SLU 58	-111	12	6878	-5.93	-6.88	0.11
89	SLU 59	-161	12	7170	-6.43	-10.03	0.12
89	SLU 60	-109	12	7011	-6.05	-6.67	0.11
89	SLU 61	-159	13	7303	-6.55	-9.83	0.12
89	SLU 62	-115	12	7083	-6.11	-7.06	0.11
89	SLU 63	-165	13	7375	-6.61	-10.22	0.12
89	SLU 64	-88	12	6672	-5.79	-5.49	0.11
89	SLU 65	-171	12	7160	-6.63	-10.75	0.12
89	SLU 66	-90	12	6789	-5.91	-5.69	0.11
89	SLU 67	-140	12	7082	-6.41	-8.84	0.12
89	SLU 68	-177	12	7232	-6.69	-11.14	0.12
89	SLU 69	-96	12	6861	-5.96	-6.08	0.11
89	SLU 70	-146	12	7154	-6.46	-9.23	0.12
89	SLU 71	-100	12	6816	-5.91	-6.27	0.11
89	SLU 72	-150	12	7108	-6.41	-9.42	0.12
89	SLU 73	-194	13	7805	-7.18	-12.09	0.13
89	SLU 74	-113	13	7435	-6.46	-7.03	0.12
89	SLU 75	-163	13	7727	-6.96	-10.18	0.13
89	SLU 76	-200	13	7877	-7.23	-12.48	0.13
89	SLU 77	-119	13	7507	-6.51	-7.42	0.12
89	SLU 78	-169	14	7799	-7.01	-10.57	0.13
89	SLU 79	-123	13	7461	-6.46	-7.61	0.12
89	SLU 80	-173	13	7754	-6.96	-10.77	0.13
89	SLU 81	-121	13	7594	-6.58	-7.41	0.12
89	SLU 82	-171	14	7887	-7.08	-10.56	0.13
89	SLU 83	-127	13	7666	-6.64	-7.8	0.12
89	SLU 84	-177	14	7959	-7.14	-10.95	0.13
89	SLE RA 1	-65	9	5004	-4.34	-4.06	0.08
89	SLE RA 2	-121	9	5329	-4.9	-7.57	0.09
89	SLE RA 3	-66	9	5082	-4.42	-4.2	0.08
89	SLE RA 4	-100	9	5277	-4.75	-6.3	0.09
89	SLE RA 5	-125	9	5377	-4.94	-7.83	0.09
89	SLE RA 6	-70	9	5130	-4.45	-4.46	0.08
89	SLE RA 7	-104	9	5325	-4.79	-6.56	0.09
89	SLE RA 8	-73	9	5100	-4.42	-4.58	0.08
89	SLE RA 9	-106	9	5295	-4.75	-6.69	0.09
89	SLE RA 10	-136	10	5760	-5.26	-8.46	0.1
89	SLE RA 11	-82	10	5513	-4.78	-5.09	0.09
89	SLE RA 12	-115	10	5708	-5.12	-7.19	0.09
89	SLE RA 13	-140	10	5807	-5.3	-8.72	0.1
89	SLE RA 14	-86	10	5561	-4.82	-5.35	0.09
89	SLE RA 15	-119	10	5756	-5.15	-7.45	0.1
89	SLE RA 16	-88	10	5530	-4.78	-5.48	0.09
89	SLE RA 17	-122	10	5725	-5.12	-7.58	0.09
89	SLE RA 18	-87	10	5619	-4.86	-5.34	0.09
89	SLE RA 19	-120	10	5814	-5.2	-7.44	0.1
89	SLE RA 20	-91	10	5667	-4.9	-5.6	0.09
89	SLE RA 21	-124	10	5862	-5.24	-7.7	0.1
89	SLE FR 1	-65	9	5004	-4.34	-4.06	0.08
89	SLE FR 2	-76	9	5069	-4.45	-4.76	0.08
89	SLE FR 3	-66	9	5023	-4.36	-4.17	0.08
89	SLE FR 4	-83	9	5254	-4.61	-5.15	0.09
89	SLE FR 5	-73	9	5208	-4.51	-4.55	0.08
89	SLE FR 6	-76	9	5312	-4.6	-4.7	0.09
89	SLE QP 1	-65	9	5004	-4.34	-4.06	0.08
89	SLE QP 2	-71	9	5189	-4.5	-4.45	0.08
89	SLD 1	353	5	3706	-4.18	22.04	0.08
89	SLD 2	353	5	3706	-4.18	22.04	0.08
89	SLD 3	280	2	2888	-2.56	17.39	0.06
89	SLD 4	280	2	2888	-2.56	17.39	0.06
89	SLD 5	166	11	5984	-6.86	10.55	0.12
89	SLD 6	166	11	5984	-6.86	10.55	0.12
89	SLD 7	-76	4	3258	-1.46	-4.95	0.04
89	SLD 8	-76	4	3258	-1.46	-4.95	0.04
89	SLD 9	-67	14	7119	-7.53	-3.95	0.13
89	SLD 10	-67	14	7119	-7.53	-3.95	0.13
89	SLD 11	-309	7	4393	-2.14	-19.44	0.05
89	SLD 12	-309	7	4393	-2.14	-19.44	0.05
89	SLD 13	-423	16	7489	-6.43	-26.28	0.11
89	SLD 14	-423	16	7489	-6.43	-26.28	0.11
89	SLD 15	-496	13	6671	-4.81	-30.93	0.09
89	SLD 16	-496	13	6671	-4.81	-30.93	0.09
89	SLV 1	924	-1	1743	-3.75	57.77	0.08
89	SLV 2	924	-1	1743	-3.75	57.77	0.08
89	SLV 3	747	-7	-218	0.17	46.32	0.02
89	SLV 4	747	-7	-218	0.17	46.32	0.02
89	SLV 5	496	14	7128	-10.22	31.59	0.17
89	SLV 6	496	14	7128	-10.22	31.59	0.17
89	SLV 7	-95	-4	593	2.85	-6.58	-0.02
89	SLV 8	-95	-4	593	2.85	-6.58	-0.02
89	SLV 9	-48	22	9784	-11.85	-2.31	0.19
89	SLV 10	-48	22	9784	-11.85	-2.31	0.19
89	SLV 11	-639	4	3249	1.22	-40.48	0
89	SLV 12	-639	4	3249	1.22	-40.48	0

Nodo	Cont.	Reazione a traslazione			Reazione a rotazione		
Ind.	N.br.	x	y	z	x	y	z
89	SLV 13	-890	25	10595	-9.17	-55.21	0.15
89	SLV 14	-890	25	10595	-9.17	-55.21	0.15
89	SLV 15	-1067	20	8634	-5.25	-66.66	0.09
89	SLV 16	-1067	20	8634	-5.25	-66.66	0.09
91	SLU 1	-755	1530	7073	-62.24	908.49	-351.55
91	SLU 2	-868	1574	7659	-62.95	956.58	-364.62
91	SLU 3	-775	1570	7255	-63.91	931.68	-360.87
91	SLU 4	-843	1597	7606	-64.34	960.54	-368.71
91	SLU 5	-882	1595	7767	-63.82	969.24	-369.61
91	SLU 6	-790	1592	7363	-64.78	944.34	-365.85
91	SLU 7	-857	1618	7714	-65.21	973.2	-373.7
91	SLU 8	-784	1573	7289	-63.98	933.8	-361.52
91	SLU 9	-851	1599	7640	-64.41	962.66	-369.37
91	SLU 10	-976	1775	8598	-71.37	1074.04	-410.85
91	SLU 11	-884	1771	8194	-72.33	1049.14	-407.09
91	SLU 12	-951	1798	8545	-72.75	1077.99	-414.94
91	SLU 13	-991	1797	8706	-72.24	1086.7	-415.84
91	SLU 14	-898	1793	8302	-73.2	1061.79	-412.08
91	SLU 15	-966	1819	8653	-73.63	1090.65	-419.92
91	SLU 16	-892	1774	8228	-72.4	1051.26	-407.75
91	SLU 17	-960	1801	8579	-72.83	1080.12	-415.59
91	SLU 18	-910	1817	8414	-74.26	1076.28	-417.58
91	SLU 19	-978	1843	8766	-74.69	1105.14	-425.43
91	SLU 20	-925	1839	8522	-75.13	1088.94	-422.57
91	SLU 21	-992	1865	8874	-75.56	1117.79	-430.42
91	SLU 22	-851	1721	7939	-70.24	1019.09	-395.49
91	SLU 23	-963	1765	8525	-70.96	1067.19	-408.56
91	SLU 24	-871	1761	8121	-71.92	1042.29	-404.8
91	SLU 25	-938	1788	8472	-72.35	1071.15	-412.65
91	SLU 26	-977	1787	8633	-71.83	1079.85	-413.55
91	SLU 27	-885	1783	8229	-72.79	1054.95	-409.79
91	SLU 28	-952	1809	8580	-73.22	1083.81	-417.63
91	SLU 29	-879	1764	8155	-71.99	1044.41	-405.46
91	SLU 30	-947	1791	8506	-72.42	1073.27	-413.3
91	SLU 31	-1072	1966	9464	-79.37	1184.64	-454.78
91	SLU 32	-979	1962	9060	-80.33	1159.74	-451.03
91	SLU 33	-1047	1989	9411	-80.76	1188.6	-458.87
91	SLU 34	-1086	1988	9572	-80.25	1197.3	-459.77
91	SLU 35	-994	1984	9168	-81.21	1172.4	-456.01
91	SLU 36	-1061	2011	9519	-81.64	1201.26	-463.86
91	SLU 37	-988	1965	9094	-80.41	1161.86	-451.68
91	SLU 38	-1055	1992	9445	-80.83	1190.72	-459.53
91	SLU 39	-1006	2008	9280	-82.26	1186.88	-461.52
91	SLU 40	-1073	2035	9632	-82.69	1215.74	-469.37
91	SLU 41	-1020	2030	9388	-83.14	1199.54	-466.51
91	SLU 42	-1088	2056	9740	-83.57	1228.4	-474.35
91	SLU 43	-949	1923	8898	-78.16	1143.11	-441.95
91	SLU 44	-1061	1967	9484	-78.88	1191.21	-455.03
91	SLU 45	-969	1963	9080	-79.84	1166.3	-451.27
91	SLU 46	-1037	1990	9431	-80.27	1195.16	-459.11
91	SLU 47	-1076	1989	9592	-79.75	1203.86	-460.01
91	SLU 48	-984	1985	9188	-80.71	1178.96	-456.26
91	SLU 49	-1051	2012	9539	-81.14	1207.82	-464.1
91	SLU 50	-978	1966	9114	-79.91	1168.43	-451.92
91	SLU 51	-1045	1993	9466	-80.34	1197.28	-459.77
91	SLU 52	-1170	2168	10423	-87.29	1308.66	-501.25
91	SLU 53	-1078	2165	10019	-88.25	1283.76	-497.49
91	SLU 54	-1145	2191	10370	-88.68	1312.62	-505.34
91	SLU 55	-1184	2190	10531	-88.16	1321.32	-506.24
91	SLU 56	-1092	2186	10127	-89.13	1296.42	-502.48
91	SLU 57	-1160	2213	10478	-89.55	1325.28	-510.33
91	SLU 58	-1086	2167	10053	-88.32	1285.88	-498.15
91	SLU 59	-1154	2194	10404	-88.75	1314.74	-505.99
91	SLU 60	-1104	2210	10239	-90.18	1310.9	-507.99
91	SLU 61	-1172	2237	10591	-90.61	1339.76	-515.83
91	SLU 62	-1119	2232	10347	-91.06	1323.56	-512.97
91	SLU 63	-1186	2258	10699	-91.49	1352.42	-520.82
91	SLU 64	-1045	2114	9764	-86.17	1253.72	-485.89
91	SLU 65	-1157	2158	10350	-86.88	1301.81	-498.96
91	SLU 66	-1065	2155	9946	-87.84	1276.91	-495.21
91	SLU 67	-1132	2181	10297	-88.27	1305.77	-503.05
91	SLU 68	-1171	2180	10458	-87.76	1314.47	-503.95
91	SLU 69	-1079	2176	10054	-88.72	1289.57	-500.19
91	SLU 70	-1146	2203	10405	-89.15	1318.43	-508.04
91	SLU 71	-1073	2157	9980	-87.92	1279.03	-495.86
91	SLU 72	-1141	2184	10331	-88.35	1307.89	-503.7
91	SLU 73	-1266	2359	11289	-95.3	1419.27	-545.19
91	SLU 74	-1173	2356	10885	-96.26	1394.37	-541.43
91	SLU 75	-1241	2382	11236	-96.69	1423.22	-549.27
91	SLU 76	-1280	2381	11397	-96.17	1431.93	-550.17
91	SLU 77	-1188	2377	10993	-97.13	1407.02	-546.42
91	SLU 78	-1255	2404	11344	-97.56	1435.88	-554.26
91	SLU 79	-1182	2359	10919	-96.33	1396.49	-542.08
91	SLU 80	-1249	2385	11270	-96.76	1425.35	-549.93
91	SLU 81	-1200	2401	11105	-98.19	1421.51	-551.92
91	SLU 82	-1267	2428	11457	-98.62	1450.37	-559.77
91	SLU 83	-1214	2423	11213	-99.06	1434.17	-556.91
91	SLU 84	-1281	2450	11565	-99.49	1463.02	-564.75
91	SLE RA 1	-783	1584	7321	-64.52	940.09	-364.1
91	SLE RA 2	-857	1614	7711	-65	972.15	-372.82

Nodo	Cont.	Reazione a traslazione			Reazione a rotazione		
Ind.	N.br.	x	y	z	x	y	z
91	SLE RA 3	-796	1611	7442	-65.64	955.55	-370.32
91	SLE RA 4	-841	1629	7676	-65.93	974.79	-375.55
91	SLE RA 5	-867	1628	7783	-65.58	980.59	-376.14
91	SLE RA 6	-805	1626	7514	-66.22	963.99	-373.64
91	SLE RA 7	-850	1643	7748	-66.51	983.23	-378.87
91	SLE RA 8	-802	1613	7464	-65.69	956.97	-370.75
91	SLE RA 9	-847	1631	7699	-65.97	976.2	-375.98
91	SLE RA 10	-930	1748	8337	-70.61	1050.46	-403.64
91	SLE RA 11	-868	1745	8068	-71.25	1033.85	-401.13
91	SLE RA 12	-913	1763	8302	-71.54	1053.09	-406.36
91	SLE RA 13	-939	1762	8409	-71.19	1058.89	-406.96
91	SLE RA 14	-878	1760	8140	-71.83	1042.29	-404.46
91	SLE RA 15	-923	1777	8374	-72.12	1061.53	-409.69
91	SLE RA 16	-874	1747	8090	-71.3	1035.27	-401.57
91	SLE RA 17	-919	1765	8325	-71.58	1054.51	-406.8
91	SLE RA 18	-886	1776	8215	-72.54	1051.95	-408.13
91	SLE RA 19	-931	1793	8449	-72.82	1071.19	-413.36
91	SLE RA 20	-896	1790	8287	-73.12	1060.39	-411.45
91	SLE RA 21	-940	1808	8521	-73.41	1079.63	-416.68
91	SLE FR 1	-783	1584	7321	-64.52	940.09	-364.1
91	SLE FR 2	-798	1590	7399	-64.62	946.5	-365.85
91	SLE FR 3	-786	1590	7349	-64.76	943.46	-365.43
91	SLE FR 4	-829	1647	7667	-67.02	980.06	-379.05
91	SLE FR 5	-817	1647	7618	-67.16	977.02	-378.64
91	SLE FR 6	-834	1680	7768	-68.53	996.02	-386.11
91	SLE QP 1	-783	1584	7321	-64.52	940.09	-364.1
91	SLE QP 2	-814	1642	7589	-66.93	973.65	-377.31
91	SLD 1	-421	1422	5663	-58.8	817.35	-328.69
91	SLD 2	-421	1422	5663	-58.8	817.35	-328.69
91	SLD 3	-285	1134	4400	-47.02	652.31	-261.13
91	SLD 4	-285	1134	4400	-47.02	652.31	-261.13
91	SLD 5	-903	2013	8926	-82.36	1177.06	-465.19
91	SLD 6	-903	2013	8926	-82.36	1177.06	-465.19
91	SLD 7	-448	1052	4718	-43.09	626.94	-239.99
91	SLD 8	-448	1052	4718	-43.09	626.94	-239.99
91	SLD 9	-1179	2231	10460	-90.77	1320.35	-514.63
91	SLD 10	-1179	2231	10460	-90.77	1320.35	-514.63
91	SLD 11	-724	1270	6252	-51.5	770.23	-289.43
91	SLD 12	-724	1270	6252	-51.5	770.23	-289.43
91	SLD 13	-1342	2150	10777	-86.84	1294.98	-493.49
91	SLD 14	-1342	2150	10777	-86.84	1294.98	-493.49
91	SLD 15	-1206	1861	9515	-75.06	1129.94	-425.93
91	SLD 16	-1206	1861	9515	-75.06	1129.94	-425.93
91	SLV 1	98	1127	3105	-47.83	609.06	-263.6
91	SLV 2	98	1127	3105	-47.83	609.06	-263.6
91	SLV 3	430	452	102	-20.27	220.11	-105.12
91	SLV 4	430	452	102	-20.27	220.11	-105.12
91	SLV 5	-1043	2511	10797	-103	1454.18	-583.56
91	SLV 6	-1043	2511	10797	-103	1454.18	-583.56
91	SLV 7	63	260	790	-11.13	157.67	-55.29
91	SLV 8	63	260	790	-11.13	157.67	-55.29
91	SLV 9	-1690	3023	14388	-122.73	1789.62	-699.33
91	SLV 10	-1690	3023	14388	-122.73	1789.62	-699.33
91	SLV 11	-584	772	4381	-30.86	493.11	-171.06
91	SLV 12	-584	772	4381	-30.86	493.11	-171.06
91	SLV 13	-2057	2832	15075	-113.58	1727.18	-649.5
91	SLV 14	-2057	2832	15075	-113.58	1727.18	-649.5
91	SLV 15	-1725	2156	12073	-86.02	1338.23	-491.02
91	SLV 16	-1725	2156	12073	-86.02	1338.23	-491.02
92	SLU 1	-2	-38	420	2.53	-1.21	-0.09
92	SLU 2	-2	-39	417	2.6	-1.22	-0.09
92	SLU 3	-2	-40	412	2.75	-1.23	-0.09
92	SLU 4	-2	-41	411	2.79	-1.23	-0.09
92	SLU 5	-2	-40	412	2.75	-1.22	-0.09
92	SLU 6	-2	-42	407	2.9	-1.24	-0.09
92	SLU 7	-2	-42	405	2.94	-1.24	-0.09
92	SLU 8	-2	-41	409	2.83	-1.23	-0.09
92	SLU 9	-2	-42	408	2.88	-1.23	-0.09
92	SLU 10	-4	-70	590	3.31	-2.09	-0.12
92	SLU 11	-4	-71	584	3.45	-2.1	-0.12
92	SLU 12	-4	-72	583	3.5	-2.11	-0.13
92	SLU 13	-4	-71	584	3.46	-2.1	-0.13
92	SLU 14	-4	-73	579	3.6	-2.11	-0.13
92	SLU 15	-4	-73	578	3.65	-2.12	-0.13
92	SLU 16	-4	-72	581	3.54	-2.11	-0.12
92	SLU 17	-4	-72	580	3.58	-2.11	-0.13
92	SLU 18	-5	-82	666	3.54	-2.46	-0.14
92	SLU 19	-5	-82	665	3.58	-2.46	-0.14
92	SLU 20	-5	-84	661	3.69	-2.47	-0.14
92	SLU 21	-5	-84	659	3.73	-2.47	-0.14
92	SLU 22	-3	-53	442	3.39	-1.51	-0.1
92	SLU 23	-3	-54	439	3.46	-1.52	-0.1
92	SLU 24	-3	-55	434	3.61	-1.53	-0.11
92	SLU 25	-3	-56	432	3.65	-1.53	-0.11
92	SLU 26	-3	-56	434	3.61	-1.53	-0.11
92	SLU 27	-3	-57	429	3.76	-1.54	-0.11
92	SLU 28	-3	-58	427	3.8	-1.54	-0.11
92	SLU 29	-3	-56	431	3.69	-1.53	-0.11
92	SLU 30	-3	-57	429	3.73	-1.54	-0.11
92	SLU 31	-4	-85	612	4.17	-2.39	-0.14

Nodo	Cont.	Reazione a traslazione			Reazione a rotazione		
Ind.	N.br.	x	y	z	x	y	z
92	SLU 32	-5	-86	606	4.31	-2.41	-0.14
92	SLU 33	-5	-87	605	4.36	-2.41	-0.14
92	SLU 34	-5	-86	606	4.32	-2.4	-0.14
92	SLU 35	-5	-88	601	4.46	-2.42	-0.14
92	SLU 36	-5	-88	599	4.51	-2.42	-0.14
92	SLU 37	-5	-87	603	4.39	-2.41	-0.14
92	SLU 38	-5	-88	602	4.44	-2.41	-0.14
92	SLU 39	-5	-97	688	4.39	-2.77	-0.15
92	SLU 40	-5	-98	686	4.44	-2.77	-0.16
92	SLU 41	-5	-99	683	4.55	-2.77	-0.16
92	SLU 42	-5	-99	681	4.59	-2.78	-0.16
92	SLU 43	-3	-44	538	3	-1.47	-0.11
92	SLU 44	-3	-45	536	3.07	-1.48	-0.11
92	SLU 45	-3	-46	531	3.21	-1.49	-0.11
92	SLU 46	-3	-47	529	3.26	-1.49	-0.11
92	SLU 47	-3	-46	530	3.22	-1.49	-0.11
92	SLU 48	-3	-48	525	3.37	-1.5	-0.11
92	SLU 49	-3	-48	524	3.41	-1.5	-0.11
92	SLU 50	-3	-47	528	3.3	-1.49	-0.11
92	SLU 51	-3	-48	526	3.34	-1.49	-0.11
92	SLU 52	-4	-76	708	3.77	-2.35	-0.15
92	SLU 53	-4	-77	703	3.92	-2.36	-0.15
92	SLU 54	-4	-78	701	3.96	-2.37	-0.15
92	SLU 55	-4	-77	703	3.92	-2.36	-0.15
92	SLU 56	-4	-79	698	4.07	-2.37	-0.15
92	SLU 57	-5	-79	696	4.11	-2.38	-0.15
92	SLU 58	-4	-78	700	4	-2.37	-0.15
92	SLU 59	-4	-79	698	4.04	-2.37	-0.15
92	SLU 60	-5	-88	785	4	-2.72	-0.16
92	SLU 61	-5	-89	783	4.04	-2.73	-0.16
92	SLU 62	-5	-90	779	4.15	-2.73	-0.16
92	SLU 63	-5	-90	778	4.2	-2.73	-0.16
92	SLU 64	-3	-59	560	3.85	-1.78	-0.12
92	SLU 65	-3	-60	558	3.93	-1.78	-0.13
92	SLU 66	-3	-62	552	4.07	-1.79	-0.13
92	SLU 67	-3	-62	551	4.12	-1.79	-0.13
92	SLU 68	-3	-62	552	4.08	-1.79	-0.13
92	SLU 69	-4	-63	547	4.22	-1.8	-0.13
92	SLU 70	-4	-64	545	4.27	-1.8	-0.13
92	SLU 71	-3	-63	549	4.16	-1.79	-0.13
92	SLU 72	-3	-63	548	4.2	-1.8	-0.13
92	SLU 73	-5	-91	730	4.63	-2.65	-0.16
92	SLU 74	-5	-92	725	4.78	-2.67	-0.16
92	SLU 75	-5	-93	723	4.82	-2.67	-0.16
92	SLU 76	-5	-93	725	4.78	-2.66	-0.16
92	SLU 77	-5	-94	719	4.93	-2.68	-0.16
92	SLU 78	-5	-94	718	4.97	-2.68	-0.16
92	SLU 79	-5	-93	722	4.86	-2.67	-0.16
92	SLU 80	-5	-94	720	4.9	-2.67	-0.16
92	SLU 81	-6	-103	806	4.86	-3.03	-0.18
92	SLU 82	-6	-104	805	4.9	-3.03	-0.18
92	SLU 83	-6	-105	801	5.01	-3.04	-0.18
92	SLU 84	-6	-105	800	5.05	-3.04	-0.18
92	SLE RA 1	-3	-42	426	2.78	-1.3	-0.09
92	SLE RA 2	-3	-43	424	2.83	-1.3	-0.09
92	SLE RA 3	-3	-44	421	2.92	-1.31	-0.09
92	SLE RA 4	-3	-44	420	2.95	-1.31	-0.09
92	SLE RA 5	-3	-44	421	2.93	-1.31	-0.09
92	SLE RA 6	-3	-45	417	3.02	-1.32	-0.09
92	SLE RA 7	-3	-45	416	3.05	-1.32	-0.09
92	SLE RA 8	-3	-44	419	2.98	-1.31	-0.09
92	SLE RA 9	-3	-45	418	3.01	-1.31	-0.09
92	SLE RA 10	-4	-63	539	3.29	-1.88	-0.12
92	SLE RA 11	-4	-64	536	3.39	-1.89	-0.12
92	SLE RA 12	-4	-65	535	3.42	-1.89	-0.12
92	SLE RA 13	-4	-64	536	3.39	-1.89	-0.12
92	SLE RA 14	-4	-65	532	3.49	-1.9	-0.12
92	SLE RA 15	-4	-66	531	3.52	-1.9	-0.12
92	SLE RA 16	-4	-65	534	3.45	-1.9	-0.12
92	SLE RA 17	-4	-65	533	3.48	-1.9	-0.12
92	SLE RA 18	-4	-72	590	3.45	-2.13	-0.13
92	SLE RA 19	-4	-72	589	3.48	-2.13	-0.13
92	SLE RA 20	-4	-73	587	3.55	-2.14	-0.13
92	SLE RA 21	-4	-73	586	3.58	-2.14	-0.13
92	SLE FR 1	-3	-42	426	2.78	-1.3	-0.09
92	SLE FR 2	-3	-42	426	2.79	-1.3	-0.09
92	SLE FR 3	-3	-43	425	2.82	-1.3	-0.09
92	SLE FR 4	-3	-51	475	2.99	-1.55	-0.1
92	SLE FR 5	-3	-52	474	3.02	-1.55	-0.1
92	SLE FR 6	-3	-57	508	3.11	-1.72	-0.11
92	SLE QP 1	-3	-42	426	2.78	-1.3	-0.09
92	SLE QP 2	-3	-51	475	2.98	-1.55	-0.1
92	SLD 1	0	-46	537	1.71	-0.36	-0.33
92	SLD 2	0	-46	537	1.71	-0.36	-0.33
92	SLD 3	0	-67	369	5.28	-0.24	-0.31
92	SLD 4	0	-67	369	5.28	-0.24	-0.31
92	SLD 5	-3	-19	749	-2.82	-1.38	-0.21
92	SLD 6	-3	-19	749	-2.82	-1.38	-0.21
92	SLD 7	-2	-87	189	9.08	-0.96	-0.12
92	SLD 8	-2	-87	189	9.08	-0.96	-0.12

Nodo	Cont.	Reazione a traslazione			Reazione a rotazione		
Ind.	N.br.	x	y	z	x	y	z
92	SLD 9	-4	-15	762	-3.13	-2.13	-0.08
92	SLD 10	-4	-15	762	-3.13	-2.13	-0.08
92	SLD 11	-3	-84	202	8.77	-1.71	0.01
92	SLD 12	-3	-84	202	8.77	-1.71	0.01
92	SLD 13	-6	-36	582	0.67	-2.86	0.1
92	SLD 14	-6	-36	582	0.67	-2.86	0.1
92	SLD 15	-6	-56	414	4.24	-2.74	0.13
92	SLD 16	-6	-56	414	4.24	-2.74	0.13
92	SLV 1	4	-39	619	0.02	1.21	-0.64
92	SLV 2	4	-39	619	0.02	1.21	-0.64
92	SLV 3	4	-87	225	8.38	1.5	-0.58
92	SLV 4	4	-87	225	8.38	1.5	-0.58
92	SLV 5	-2	25	1116	-10.6	-1.17	-0.36
92	SLV 6	-2	25	1116	-10.6	-1.17	-0.36
92	SLV 7	0	-134	-197	17.29	-0.19	-0.15
92	SLV 8	0	-134	-197	17.29	-0.19	-0.15
92	SLV 9	-6	32	1148	-11.33	-2.91	-0.05
92	SLV 10	-6	32	1148	-11.33	-2.91	-0.05
92	SLV 11	-4	-127	-165	16.56	-1.93	0.15
92	SLV 12	-4	-127	-165	16.56	-1.93	0.15
92	SLV 13	-10	-15	725	-2.43	-4.6	0.37
92	SLV 14	-10	-15	725	-2.43	-4.6	0.37
92	SLV 15	-10	-63	331	5.94	-4.3	0.43
92	SLV 16	-10	-63	331	5.94	-4.3	0.43
93	SLU 1	-10	-55	5496	-8.29	-0.71	-0.48
93	SLU 2	-10	-135	5466	-4.77	-0.67	-0.48
93	SLU 3	-10	-51	5610	-8.54	-0.68	-0.49
93	SLU 4	-10	-99	5592	-6.43	-0.65	-0.49
93	SLU 5	-10	-133	5540	-4.9	-0.64	-0.48
93	SLU 6	-10	-49	5684	-8.67	-0.65	-0.5
93	SLU 7	-10	-97	5666	-6.56	-0.63	-0.5
93	SLU 8	-10	-51	5643	-8.55	-0.65	-0.5
93	SLU 9	-10	-98	5625	-6.43	-0.63	-0.49
93	SLU 10	-12	-155	6269	-5.87	-0.63	-0.57
93	SLU 11	-12	-71	6413	-9.64	-0.64	-0.59
93	SLU 12	-12	-119	6395	-7.53	-0.62	-0.59
93	SLU 13	-12	-152	6342	-6	-0.6	-0.58
93	SLU 14	-12	-69	6486	-9.77	-0.61	-0.6
93	SLU 15	-12	-116	6468	-7.66	-0.59	-0.59
93	SLU 16	-12	-70	6446	-9.65	-0.61	-0.59
93	SLU 17	-12	-118	6428	-7.54	-0.59	-0.59
93	SLU 18	-13	-83	6643	-9.87	-0.65	-0.62
93	SLU 19	-13	-131	6625	-7.76	-0.63	-0.61
93	SLU 20	-13	-81	6716	-10	-0.63	-0.62
93	SLU 21	-13	-129	6698	-7.89	-0.6	-0.62
93	SLU 22	-12	-73	6132	-9.27	-0.89	-0.55
93	SLU 23	-12	-153	6102	-5.75	-0.85	-0.54
93	SLU 24	-12	-69	6246	-9.52	-0.86	-0.56
93	SLU 25	-12	-117	6228	-7.4	-0.84	-0.55
93	SLU 26	-12	-150	6176	-5.87	-0.82	-0.55
93	SLU 27	-12	-67	6320	-9.64	-0.83	-0.56
93	SLU 28	-12	-114	6302	-7.53	-0.81	-0.56
93	SLU 29	-12	-68	6280	-9.52	-0.83	-0.56
93	SLU 30	-12	-116	6261	-7.41	-0.81	-0.56
93	SLU 31	-14	-172	6905	-6.85	-0.82	-0.64
93	SLU 32	-14	-89	7049	-10.62	-0.82	-0.65
93	SLU 33	-14	-136	7031	-8.51	-0.8	-0.65
93	SLU 34	-14	-170	6978	-6.98	-0.79	-0.64
93	SLU 35	-14	-86	7123	-10.75	-0.79	-0.66
93	SLU 36	-14	-134	7105	-8.64	-0.77	-0.66
93	SLU 37	-14	-88	7082	-10.63	-0.8	-0.66
93	SLU 38	-14	-136	7064	-8.52	-0.77	-0.65
93	SLU 39	-15	-101	7279	-10.85	-0.84	-0.68
93	SLU 40	-15	-149	7261	-8.73	-0.81	-0.68
93	SLU 41	-15	-99	7353	-10.98	-0.81	-0.69
93	SLU 42	-15	-147	7335	-8.86	-0.79	-0.69
93	SLU 43	-13	-66	6927	-10.44	-0.86	-0.6
93	SLU 44	-13	-146	6897	-6.92	-0.82	-0.6
93	SLU 45	-13	-62	7041	-10.69	-0.83	-0.61
93	SLU 46	-13	-110	7023	-8.58	-0.8	-0.61
93	SLU 47	-13	-143	6970	-7.05	-0.79	-0.61
93	SLU 48	-13	-59	7114	-10.82	-0.8	-0.62
93	SLU 49	-13	-107	7096	-8.71	-0.78	-0.62
93	SLU 50	-13	-61	7074	-10.7	-0.8	-0.62
93	SLU 51	-13	-109	7056	-8.58	-0.78	-0.62
93	SLU 52	-15	-165	7699	-8.03	-0.78	-0.69
93	SLU 53	-15	-81	7843	-11.8	-0.79	-0.71
93	SLU 54	-15	-129	7825	-9.68	-0.77	-0.71
93	SLU 55	-15	-163	7773	-8.15	-0.75	-0.7
93	SLU 56	-15	-79	7917	-11.92	-0.76	-0.72
93	SLU 57	-15	-127	7899	-9.81	-0.74	-0.71
93	SLU 58	-15	-81	7877	-11.8	-0.76	-0.71
93	SLU 59	-15	-129	7859	-9.69	-0.74	-0.71
93	SLU 60	-16	-94	8073	-12.02	-0.8	-0.74
93	SLU 61	-16	-142	8055	-9.91	-0.78	-0.74
93	SLU 62	-16	-92	8147	-12.15	-0.78	-0.75
93	SLU 63	-16	-139	8129	-10.04	-0.75	-0.74
93	SLU 64	-14	-83	7563	-11.42	-1.04	-0.67
93	SLU 65	-14	-163	7533	-7.9	-1	-0.66
93	SLU 66	-15	-79	7677	-11.67	-1.01	-0.68

Nodo	Cont.	Reazione a traslazione			Reazione a rotazione		
Ind.	N.br.	x	y	z	x	y	z
93	SLU 67	-14	-127	7659	-9.56	-0.99	-0.68
93	SLU 68	-14	-161	7606	-8.03	-0.97	-0.67
93	SLU 69	-15	-77	7751	-11.8	-0.98	-0.69
93	SLU 70	-15	-125	7733	-9.68	-0.96	-0.68
93	SLU 71	-15	-79	7710	-11.67	-0.98	-0.68
93	SLU 72	-14	-127	7692	-9.56	-0.96	-0.68
93	SLU 73	-16	-183	8335	-9	-0.96	-0.76
93	SLU 74	-17	-99	8480	-12.77	-0.97	-0.77
93	SLU 75	-16	-147	8462	-10.66	-0.95	-0.77
93	SLU 76	-16	-181	8409	-9.13	-0.94	-0.77
93	SLU 77	-17	-97	8553	-12.9	-0.94	-0.78
93	SLU 78	-17	-145	8535	-10.79	-0.92	-0.78
93	SLU 79	-17	-98	8513	-12.78	-0.95	-0.78
93	SLU 80	-17	-146	8495	-10.67	-0.92	-0.78
93	SLU 81	-17	-112	8710	-13	-0.99	-0.8
93	SLU 82	-17	-159	8692	-10.89	-0.96	-0.8
93	SLU 83	-17	-109	8783	-13.13	-0.96	-0.81
93	SLU 84	-17	-157	8765	-11.01	-0.94	-0.81
93	SLE RA 1	-11	-60	5678	-8.57	-0.76	-0.5
93	SLE RA 2	-11	-114	5658	-6.22	-0.73	-0.5
93	SLE RA 3	-11	-58	5754	-8.73	-0.74	-0.51
93	SLE RA 4	-11	-90	5742	-7.33	-0.72	-0.51
93	SLE RA 5	-11	-112	5707	-6.31	-0.72	-0.5
93	SLE RA 6	-11	-56	5803	-8.82	-0.72	-0.51
93	SLE RA 7	-11	-88	5791	-7.41	-0.71	-0.51
93	SLE RA 8	-11	-57	5776	-8.74	-0.72	-0.51
93	SLE RA 9	-11	-89	5764	-7.33	-0.71	-0.51
93	SLE RA 10	-12	-127	6193	-6.96	-0.71	-0.56
93	SLE RA 11	-12	-71	6289	-9.47	-0.71	-0.57
93	SLE RA 12	-12	-103	6277	-8.06	-0.7	-0.57
93	SLE RA 13	-12	-125	6242	-7.04	-0.69	-0.57
93	SLE RA 14	-12	-69	6338	-9.56	-0.7	-0.58
93	SLE RA 15	-12	-101	6326	-8.15	-0.68	-0.57
93	SLE RA 16	-12	-70	6311	-9.48	-0.7	-0.57
93	SLE RA 17	-12	-102	6299	-8.07	-0.68	-0.57
93	SLE RA 18	-13	-79	6442	-9.62	-0.72	-0.59
93	SLE RA 19	-13	-111	6430	-8.21	-0.71	-0.59
93	SLE RA 20	-13	-78	6491	-9.71	-0.71	-0.59
93	SLE RA 21	-13	-109	6479	-8.3	-0.69	-0.59
93	SLE FR 1	-11	-60	5678	-8.57	-0.76	-0.5
93	SLE FR 2	-11	-71	5674	-8.1	-0.75	-0.5
93	SLE FR 3	-11	-60	5697	-8.6	-0.75	-0.5
93	SLE FR 4	-11	-77	5903	-8.41	-0.74	-0.53
93	SLE FR 5	-11	-65	5927	-8.92	-0.74	-0.53
93	SLE FR 6	-12	-70	6060	-9.09	-0.74	-0.54
93	SLE QP 1	-11	-60	5678	-8.57	-0.76	-0.5
93	SLE QP 2	-11	-66	5907	-8.88	-0.75	-0.53
93	SLD 1	-9	304	5654	-10.95	2.55	-0.49
93	SLD 2	-9	304	5654	-10.95	2.55	-0.49
93	SLD 3	-8	-74	5358	5.21	3.33	-0.43
93	SLD 4	-8	-74	5358	5.21	3.33	-0.43
93	SLD 5	-13	619	6280	-34.01	-0.93	-0.62
93	SLD 6	-13	619	6280	-34.01	-0.93	-0.62
93	SLD 7	-8	-642	5294	19.85	1.65	-0.4
93	SLD 8	-8	-642	5294	19.85	1.65	-0.4
93	SLD 9	-14	510	6520	-37.62	-3.15	-0.66
93	SLD 10	-14	510	6520	-37.62	-3.15	-0.66
93	SLD 11	-10	-751	5535	16.25	-0.57	-0.44
93	SLD 12	-10	-751	5535	16.25	-0.57	-0.44
93	SLD 13	-14	-58	6456	-22.97	-4.83	-0.63
93	SLD 14	-14	-58	6456	-22.97	-4.83	-0.63
93	SLD 15	-13	-436	6160	-6.81	-4.05	-0.56
93	SLD 16	-13	-436	6160	-6.81	-4.05	-0.56
93	SLV 1	-7	804	5317	-13.73	6.97	-0.45
93	SLV 2	-7	804	5317	-13.73	6.97	-0.45
93	SLV 3	-4	-85	4623	24.24	8.81	-0.29
93	SLV 4	-4	-85	4623	24.24	8.81	-0.29
93	SLV 5	-15	1543	6783	-67.92	-1.23	-0.74
93	SLV 6	-15	1543	6783	-67.92	-1.23	-0.74
93	SLV 7	-4	-1420	4469	58.63	4.91	-0.22
93	SLV 8	-4	-1420	4469	58.63	4.91	-0.22
93	SLV 9	-18	1288	7345	-76.4	-6.41	-0.83
93	SLV 10	-18	1288	7345	-76.4	-6.41	-0.83
93	SLV 11	-8	-1675	5032	50.15	-0.27	-0.32
93	SLV 12	-8	-1675	5032	50.15	-0.27	-0.32
93	SLV 13	-19	-47	7192	-42	-10.31	-0.76
93	SLV 14	-19	-47	7192	-42	-10.31	-0.76
93	SLV 15	-16	-936	6498	-4.04	-8.47	-0.61
93	SLV 16	-16	-936	6498	-4.04	-8.47	-0.61
94	SLU 1	-1	1223	6867	-27.5	5.48	0.42
94	SLU 2	-4	1214	7220	-28.78	3.65	0.43
94	SLU 3	-1	1264	7014	-28.69	5.6	0.43
94	SLU 4	-3	1259	7226	-29.46	4.5	0.44
94	SLU 5	-4	1241	7288	-29.75	3.71	0.43
94	SLU 6	-1	1291	7082	-29.66	5.66	0.43
94	SLU 7	-3	1285	7294	-30.43	4.56	0.44
94	SLU 8	-1	1276	7004	-29.43	5.6	0.43
94	SLU 9	-3	1271	7215	-30.2	4.5	0.44
94	SLU 10	-4	1359	8083	-31.76	4.42	0.48
94	SLU 11	-1	1409	7877	-31.67	6.38	0.48

Nodo	Cont.	Reazione a traslazione			Reazione a rotazione		
Ind.	N.br.	x	y	z	x	y	z
94	SLU 12	-3	1403	8089	-32.44	5.28	0.49
94	SLU 13	-4	1385	8151	-32.73	4.48	0.49
94	SLU 14	-1	1435	7946	-32.64	6.44	0.49
94	SLU 15	-3	1430	8157	-33.41	5.34	0.5
94	SLU 16	-1	1420	7867	-32.41	6.38	0.48
94	SLU 17	-3	1415	8078	-33.18	5.28	0.49
94	SLU 18	-1	1429	8100	-31.76	6.59	0.5
94	SLU 19	-3	1424	8312	-32.53	5.49	0.5
94	SLU 20	-1	1456	8169	-32.72	6.65	0.5
94	SLU 21	-3	1450	8380	-33.49	5.55	0.51
94	SLU 22	-1	1371	7673	-30.67	6.19	0.47
94	SLU 23	-4	1362	8026	-31.96	4.36	0.48
94	SLU 24	-1	1411	7820	-31.87	6.31	0.48
94	SLU 25	-3	1406	8032	-32.64	5.21	0.49
94	SLU 26	-4	1388	8094	-32.92	4.42	0.49
94	SLU 27	-1	1438	7888	-32.83	6.38	0.49
94	SLU 28	-3	1432	8100	-33.6	5.28	0.49
94	SLU 29	-1	1423	7810	-32.6	6.31	0.48
94	SLU 30	-3	1418	8021	-33.37	5.21	0.49
94	SLU 31	-4	1506	8889	-34.94	5.14	0.53
94	SLU 32	-1	1556	8683	-34.85	7.09	0.54
94	SLU 33	-3	1550	8895	-35.62	5.99	0.54
94	SLU 34	-4	1532	8957	-35.9	5.2	0.54
94	SLU 35	-1	1582	8752	-35.81	7.15	0.54
94	SLU 36	-3	1577	8963	-36.58	6.05	0.55
94	SLU 37	-1	1568	8673	-35.59	7.09	0.54
94	SLU 38	-3	1562	8884	-36.36	5.99	0.54
94	SLU 39	-1	1577	8906	-34.93	7.3	0.55
94	SLU 40	-3	1571	9118	-35.7	6.2	0.55
94	SLU 41	-1	1603	8975	-35.9	7.36	0.55
94	SLU 42	-3	1598	9186	-36.67	6.26	0.56
94	SLU 43	-1	1540	8651	-34.66	6.88	0.53
94	SLU 44	-5	1531	9004	-35.94	5.04	0.54
94	SLU 45	-1	1581	8798	-35.85	7	0.54
94	SLU 46	-3	1575	9009	-36.62	5.9	0.54
94	SLU 47	-5	1557	9072	-36.91	5.11	0.54
94	SLU 48	-1	1607	8866	-36.82	7.06	0.54
94	SLU 49	-3	1602	9078	-37.59	5.96	0.55
94	SLU 50	-1	1593	8788	-36.59	7	0.54
94	SLU 51	-3	1587	8999	-37.36	5.9	0.54
94	SLU 52	-5	1675	9867	-38.92	5.82	0.59
94	SLU 53	-1	1725	9661	-38.83	7.78	0.59
94	SLU 54	-3	1720	9873	-39.6	6.68	0.6
94	SLU 55	-5	1702	9935	-39.89	5.88	0.6
94	SLU 56	-1	1751	9729	-39.8	7.84	0.6
94	SLU 57	-3	1746	9941	-40.57	6.74	0.6
94	SLU 58	-1	1737	9651	-39.57	7.78	0.59
94	SLU 59	-3	1732	9862	-40.34	6.68	0.6
94	SLU 60	-1	1746	9884	-38.92	7.99	0.6
94	SLU 61	-3	1741	10096	-39.69	6.89	0.61
94	SLU 62	-1	1772	9952	-39.88	8.05	0.61
94	SLU 63	-3	1767	10164	-40.65	6.95	0.61
94	SLU 64	-1	1687	9457	-37.83	7.59	0.58
94	SLU 65	-5	1678	9809	-39.12	5.76	0.59
94	SLU 66	-2	1728	9604	-39.03	7.71	0.59
94	SLU 67	-3	1723	9815	-39.8	6.61	0.6
94	SLU 68	-5	1704	9878	-40.08	5.82	0.59
94	SLU 69	-2	1754	9672	-39.99	7.77	0.59
94	SLU 70	-3	1749	9884	-40.76	6.67	0.6
94	SLU 71	-2	1740	9594	-39.76	7.71	0.59
94	SLU 72	-3	1734	9805	-40.53	6.61	0.6
94	SLU 73	-5	1822	10673	-42.1	6.53	0.64
94	SLU 74	-2	1872	10467	-42.01	8.49	0.64
94	SLU 75	-3	1867	10679	-42.78	7.39	0.65
94	SLU 76	-5	1849	10741	-43.07	6.6	0.65
94	SLU 77	-2	1899	10535	-42.97	8.55	0.65
94	SLU 78	-4	1893	10747	-43.75	7.45	0.66
94	SLU 79	-2	1884	10457	-42.75	8.49	0.64
94	SLU 80	-3	1879	10668	-43.52	7.39	0.65
94	SLU 81	-2	1893	10690	-42.09	8.7	0.66
94	SLU 82	-3	1888	10902	-42.86	7.6	0.66
94	SLU 83	-2	1920	10758	-43.06	8.76	0.66
94	SLU 84	-3	1914	10970	-43.83	7.66	0.67
94	SLE RA 1	-1	1265	7098	-28.4	5.68	0.43
94	SLE RA 2	-3	1259	7332	-29.26	4.46	0.44
94	SLE RA 3	-1	1293	7196	-29.2	5.76	0.44
94	SLE RA 4	-2	1289	7336	-29.71	5.03	0.44
94	SLE RA 5	-3	1277	7378	-29.9	4.5	0.44
94	SLE RA 6	-1	1310	7241	-29.84	5.8	0.44
94	SLE RA 7	-2	1307	7382	-30.36	5.07	0.45
94	SLE RA 8	-1	1301	7189	-29.69	5.76	0.44
94	SLE RA 9	-2	1297	7330	-30.21	5.03	0.44
94	SLE RA 10	-3	1356	7908	-31.25	4.98	0.48
94	SLE RA 11	-1	1389	7771	-31.19	6.28	0.48
94	SLE RA 12	-2	1385	7912	-31.7	5.55	0.48
94	SLE RA 13	-3	1373	7953	-31.89	5.02	0.48
94	SLE RA 14	-1	1406	7816	-31.83	6.32	0.48
94	SLE RA 15	-2	1403	7957	-32.35	5.59	0.48
94	SLE RA 16	-1	1397	7764	-31.68	6.28	0.48
94	SLE RA 17	-2	1393	7905	-32.19	5.55	0.48

Nodo	Cont.	Reazione a traslazione			Reazione a rotazione		
Ind.	N.br.	x	y	z	x	y	z
94	SLE RA 18	-1	1403	7920	-31.24	6.42	0.48
94	SLE RA 19	-2	1399	8061	-31.76	5.69	0.49
94	SLE RA 20	-1	1420	7965	-31.89	6.46	0.49
94	SLE RA 21	-2	1417	8106	-32.4	5.73	0.49
94	SLE FR 1	-1	1265	7098	-28.4	5.68	0.43
94	SLE FR 2	-2	1264	7145	-28.58	5.44	0.43
94	SLE FR 3	-1	1272	7116	-28.66	5.7	0.43
94	SLE FR 4	-2	1305	7391	-29.43	5.66	0.45
94	SLE FR 5	-1	1314	7362	-29.51	5.92	0.45
94	SLE FR 6	-1	1334	7509	-29.82	6.05	0.46
94	SLE QP 1	-1	1265	7098	-28.4	5.68	0.43
94	SLE QP 2	-1	1307	7344	-29.26	5.9	0.45
94	SLD 1	-2	1632	9740	-42.29	11.45	0.88
94	SLD 2	-2	1632	9740	-42.29	11.45	0.88
94	SLD 3	5	1328	8771	-26.33	14.18	0.77
94	SLD 4	5	1328	8771	-26.33	14.18	0.77
94	SLD 5	-11	1864	9533	-57.37	3.44	0.75
94	SLD 6	-11	1864	9533	-57.37	3.44	0.75
94	SLD 7	10	853	6303	-4.17	12.52	0.37
94	SLD 8	10	853	6303	-4.17	12.52	0.37
94	SLD 9	-12	1760	8386	-54.34	-0.71	0.52
94	SLD 10	-12	1760	8386	-54.34	-0.71	0.52
94	SLD 11	9	749	5156	-1.14	8.37	0.15
94	SLD 12	9	749	5156	-1.14	8.37	0.15
94	SLD 13	-7	1285	5917	-32.19	-2.37	0.13
94	SLD 14	-7	1285	5917	-32.19	-2.37	0.13
94	SLD 15	-1	981	4948	-16.22	0.35	0.02
94	SLD 16	-1	981	4948	-16.22	0.35	0.02
94	SLV 1	-2	2068	12971	-59.83	18.72	1.46
94	SLV 2	-2	2068	12971	-59.83	18.72	1.46
94	SLV 3	13	1360	10667	-22.65	25.5	1.19
94	SLV 4	13	1360	10667	-22.65	25.5	1.19
94	SLV 5	-25	2608	12527	-94.81	-0.53	1.17
94	SLV 6	-25	2608	12527	-94.81	-0.53	1.17
94	SLV 7	27	249	4847	29.11	22.06	0.26
94	SLV 8	27	249	4847	29.11	22.06	0.26
94	SLV 9	-29	2364	9842	-87.62	-10.26	0.64
94	SLV 10	-29	2364	9842	-87.62	-10.26	0.64
94	SLV 11	23	5	2162	36.3	12.34	-0.27
94	SLV 12	23	5	2162	36.3	12.34	-0.27
94	SLV 13	-15	1253	4021	-35.86	-13.69	-0.29
94	SLV 14	-15	1253	4021	-35.86	-13.69	-0.29
94	SLV 15	0	545	1717	1.32	-6.91	-0.57
94	SLV 16	0	545	1717	1.32	-6.91	-0.57
95	SLU 1	-1	390	2589	-8.94	1.75	0
95	SLU 2	0	604	2849	-16.85	2.08	0
95	SLU 3	-1	401	2635	-9.33	1.8	0
95	SLU 4	0	530	2791	-14.08	1.99	0
95	SLU 5	0	611	2872	-17.16	2.1	0
95	SLU 6	-1	409	2658	-9.64	1.83	0
95	SLU 7	0	537	2814	-14.39	2.02	0
95	SLU 8	-1	405	2635	-9.56	1.8	0
95	SLU 9	0	533	2791	-14.3	2	0
95	SLU 10	0	641	3189	-17.63	2.34	0
95	SLU 11	-1	439	2975	-10.12	2.06	0
95	SLU 12	0	567	3131	-14.86	2.26	0
95	SLU 13	0	649	3213	-17.94	2.36	0
95	SLU 14	-1	446	2998	-10.43	2.09	0
95	SLU 15	0	575	3155	-15.17	2.28	0
95	SLU 16	-1	442	2975	-10.34	2.06	0
95	SLU 17	0	570	3132	-15.09	2.26	0
95	SLU 18	-1	444	3075	-10.06	2.13	0
95	SLU 19	0	572	3231	-14.8	2.32	0
95	SLU 20	-1	451	3098	-10.37	2.15	0
95	SLU 21	0	579	3254	-15.11	2.35	0
95	SLU 22	-1	431	2893	-9.92	2	0
95	SLU 23	0	645	3153	-17.83	2.32	0
95	SLU 24	-1	442	2939	-10.31	2.04	0
95	SLU 25	0	570	3095	-15.06	2.24	0
95	SLU 26	0	652	3176	-18.14	2.34	0
95	SLU 27	-1	450	2962	-10.62	2.07	0
95	SLU 28	0	578	3118	-15.37	2.26	0
95	SLU 29	-1	445	2939	-10.54	2.05	0
95	SLU 30	0	574	3095	-15.28	2.24	0
95	SLU 31	0	682	3493	-18.61	2.58	0
95	SLU 32	-1	480	3279	-11.1	2.3	0
95	SLU 33	-1	608	3435	-15.84	2.5	0
95	SLU 34	0	689	3517	-18.92	2.6	0
95	SLU 35	-1	487	3302	-11.41	2.33	0
95	SLU 36	-1	615	3458	-16.15	2.52	0
95	SLU 37	-1	483	3279	-11.32	2.31	0
95	SLU 38	-1	611	3436	-16.07	2.5	0
95	SLU 39	-1	485	3379	-11.04	2.37	0
95	SLU 40	-1	613	3535	-15.78	2.56	0
95	SLU 41	-1	492	3402	-11.35	2.39	0
95	SLU 42	-1	620	3558	-16.09	2.59	0
95	SLU 43	-1	493	3261	-11.28	2.2	0
95	SLU 44	0	707	3522	-19.19	2.52	0
95	SLU 45	-1	505	3307	-11.68	2.24	0
95	SLU 46	0	633	3464	-16.42	2.44	0

Nodo	Cont.	Reazione a traslazione			Reazione a rotazione		
Ind.	N.br.	x	y	z	x	y	z
95	SLU 47	0	714	3545	-19.5	2.54	0
95	SLU 48	-1	512	3331	-11.99	2.27	0
95	SLU 49	0	640	3487	-16.73	2.46	0
95	SLU 50	-1	508	3308	-11.9	2.25	0
95	SLU 51	0	636	3464	-16.65	2.44	0
95	SLU 52	0	744	3862	-19.98	2.78	0
95	SLU 53	-1	542	3648	-12.46	2.51	0
95	SLU 54	-1	670	3804	-17.21	2.7	0
95	SLU 55	0	752	3885	-20.29	2.81	0
95	SLU 56	-1	549	3671	-12.77	2.53	0
95	SLU 57	-1	678	3827	-17.52	2.72	0
95	SLU 58	-1	545	3648	-12.69	2.51	0
95	SLU 59	-1	674	3804	-17.43	2.7	0
95	SLU 60	-1	547	3748	-12.4	2.57	0
95	SLU 61	-1	675	3904	-17.15	2.76	0
95	SLU 62	-1	554	3771	-12.71	2.6	0
95	SLU 63	-1	682	3927	-17.46	2.79	0
95	SLU 64	-1	534	3565	-12.26	2.44	0
95	SLU 65	0	748	3826	-20.17	2.76	0
95	SLU 66	-1	545	3611	-12.66	2.49	0
95	SLU 67	-1	673	3768	-17.4	2.68	0
95	SLU 68	0	755	3849	-20.48	2.79	0
95	SLU 69	-1	553	3635	-12.97	2.51	0
95	SLU 70	-1	681	3791	-17.71	2.7	0
95	SLU 71	-1	549	3612	-12.88	2.49	0
95	SLU 72	-1	677	3768	-17.63	2.68	0
95	SLU 73	0	785	4166	-20.96	3.02	0
95	SLU 74	-1	583	3952	-13.44	2.75	0
95	SLU 75	-1	711	4108	-18.19	2.94	0
95	SLU 76	0	793	4189	-21.27	3.05	0
95	SLU 77	-1	590	3975	-13.75	2.77	0
95	SLU 78	-1	718	4131	-18.5	2.97	0
95	SLU 79	-1	586	3952	-13.67	2.75	0
95	SLU 80	-1	714	4108	-18.41	2.94	0
95	SLU 81	-1	588	4052	-13.38	2.81	0
95	SLU 82	-1	716	4208	-18.13	3.01	0
95	SLU 83	-1	595	4075	-13.69	2.84	0
95	SLU 84	-1	723	4231	-18.44	3.03	0
95	SLE RA 1	-1	402	2676	-9.22	1.82	0
95	SLE RA 2	0	544	2849	-14.49	2.04	0
95	SLE RA 3	-1	409	2707	-9.48	1.86	0
95	SLE RA 4	0	495	2811	-12.64	1.98	0
95	SLE RA 5	0	549	2865	-14.7	2.05	0
95	SLE RA 6	-1	414	2722	-9.69	1.87	0
95	SLE RA 7	0	500	2826	-12.85	2	0
95	SLE RA 8	-1	412	2707	-9.63	1.86	0
95	SLE RA 9	0	497	2811	-12.79	1.98	0
95	SLE RA 10	0	569	3076	-15.01	2.21	0
95	SLE RA 11	-1	435	2933	-10	2.03	0
95	SLE RA 12	-1	520	3037	-13.17	2.16	0
95	SLE RA 13	0	574	3092	-15.22	2.23	0
95	SLE RA 14	-1	439	2949	-10.21	2.05	0
95	SLE RA 15	-1	525	3053	-13.37	2.17	0
95	SLE RA 16	-1	437	2933	-10.15	2.03	0
95	SLE RA 17	-1	522	3038	-13.32	2.16	0
95	SLE RA 18	-1	438	3000	-9.96	2.07	0
95	SLE RA 19	-1	523	3104	-13.13	2.2	0
95	SLE RA 20	-1	443	3015	-10.17	2.09	0
95	SLE RA 21	-1	528	3119	-13.33	2.22	0
95	SLE FR 1	-1	402	2676	-9.22	1.82	0
95	SLE FR 2	-1	430	2711	-10.27	1.87	0
95	SLE FR 3	-1	404	2682	-9.3	1.83	0
95	SLE FR 4	-1	441	2808	-10.49	1.94	0
95	SLE FR 5	-1	415	2779	-9.52	1.91	0
95	SLE FR 6	-1	420	2838	-9.59	1.95	0
95	SLE QP 1	-1	402	2676	-9.22	1.82	0
95	SLE QP 2	-1	413	2773	-9.44	1.9	0
95	SLD 1	3	418	2793	-9.74	3.46	0
95	SLD 2	3	418	2793	-9.74	3.46	0
95	SLD 3	2	39	2411	3.59	2.76	0
95	SLD 4	2	39	2411	3.59	2.76	0
95	SLD 5	2	990	3357	-29.74	3.42	0
95	SLD 6	2	990	3357	-29.74	3.42	0
95	SLD 7	-2	-275	2086	14.67	1.1	0
95	SLD 8	-2	-275	2086	14.67	1.1	0
95	SLD 9	0	1100	3460	-33.56	2.7	0
95	SLD 10	0	1100	3460	-33.56	2.7	0
95	SLD 11	-3	-164	2189	10.86	0.37	0
95	SLD 12	-3	-164	2189	10.86	0.37	0
95	SLD 13	-3	786	3135	-22.47	1.04	-0.01
95	SLD 14	-3	786	3135	-22.47	1.04	-0.01
95	SLD 15	-4	407	2753	-9.14	0.34	0
95	SLD 16	-4	407	2753	-9.14	0.34	0
95	SLV 1	8	432	2826	-10.32	5.6	0.01
95	SLV 2	8	432	2826	-10.32	5.6	0.01
95	SLV 3	5	-480	1906	21.7	3.87	0.01
95	SLV 4	5	-480	1906	21.7	3.87	0.01
95	SLV 5	6	1802	4185	-58.26	5.63	0
95	SLV 6	6	1802	4185	-58.26	5.63	0
95	SLV 7	-3	-1239	1117	48.46	-0.13	0.01

Nodo	Cont.	Reazione a traslazione			Reazione a rotazione		
Ind.	N.br.	x	y	z	x	y	z
95	SLV 8	-3	-1239	1117	48.46	-0.13	0.01
95	SLV 9	2	2064	4429	-67.34	3.93	-0.01
95	SLV 10	2	2064	4429	-67.34	3.93	-0.01
95	SLV 11	-7	-977	1361	39.38	-1.83	0
95	SLV 12	-7	-977	1361	39.38	-1.83	0
95	SLV 13	-6	1305	3640	-40.58	-0.07	-0.01
95	SLV 14	-6	1305	3640	-40.58	-0.07	-0.01
95	SLV 15	-9	393	2720	-8.56	-1.8	-0.01
95	SLV 16	-9	393	2720	-8.56	-1.8	-0.01
96	SLU 1	8	528	5739	-20.35	6.38	-0.02
96	SLU 2	8	438	5696	-17.08	6.52	-0.02
96	SLU 3	8	548	5863	-21.16	6.53	-0.02
96	SLU 4	8	494	5838	-19.19	6.61	-0.02
96	SLU 5	8	451	5778	-17.6	6.6	-0.02
96	SLU 6	8	561	5945	-21.68	6.61	-0.02
96	SLU 7	8	507	5920	-19.72	6.7	-0.02
96	SLU 8	8	554	5903	-21.4	6.54	-0.02
96	SLU 9	8	499	5877	-19.43	6.63	-0.02
96	SLU 10	9	531	6456	-20.67	6.96	-0.02
96	SLU 11	9	641	6624	-24.75	6.97	-0.02
96	SLU 12	9	587	6598	-22.79	7.05	-0.02
96	SLU 13	9	543	6538	-21.19	7.04	-0.02
96	SLU 14	9	654	6706	-25.28	7.05	-0.02
96	SLU 15	9	600	6680	-23.31	7.13	-0.02
96	SLU 16	9	646	6663	-24.99	6.98	-0.02
96	SLU 17	9	592	6638	-23.03	7.06	-0.02
96	SLU 18	10	661	6825	-25.48	7	-0.02
96	SLU 19	10	607	6800	-23.52	7.09	-0.02
96	SLU 20	10	674	6907	-26.01	7.08	-0.02
96	SLU 21	10	619	6882	-24.04	7.17	-0.02
96	SLU 22	9	604	6338	-23.34	7.13	-0.02
96	SLU 23	9	514	6295	-20.07	7.27	-0.02
96	SLU 24	9	624	6462	-24.15	7.28	-0.02
96	SLU 25	9	570	6436	-22.19	7.37	-0.02
96	SLU 26	9	526	6377	-20.59	7.35	-0.02
96	SLU 27	9	637	6544	-24.68	7.37	-0.02
96	SLU 28	9	582	6518	-22.71	7.45	-0.02
96	SLU 29	9	629	6502	-24.39	7.3	-0.02
96	SLU 30	9	575	6476	-22.43	7.38	-0.02
96	SLU 31	10	606	7055	-23.66	7.71	-0.03
96	SLU 32	10	717	7223	-27.75	7.72	-0.03
96	SLU 33	10	663	7197	-25.78	7.81	-0.03
96	SLU 34	10	619	7137	-24.19	7.79	-0.03
96	SLU 35	10	729	7305	-28.27	7.8	-0.03
96	SLU 36	10	675	7279	-26.31	7.89	-0.03
96	SLU 37	10	722	7262	-27.99	7.73	-0.03
96	SLU 38	10	668	7236	-26.02	7.82	-0.03
96	SLU 39	11	736	7424	-28.48	7.76	-0.03
96	SLU 40	11	682	7398	-26.51	7.84	-0.03
96	SLU 41	11	749	7506	-29	7.84	-0.03
96	SLU 42	11	695	7480	-27.04	7.92	-0.03
96	SLU 43	10	661	7255	-25.43	8.03	-0.03
96	SLU 44	10	571	7212	-22.15	8.17	-0.03
96	SLU 45	10	681	7380	-26.24	8.18	-0.03
96	SLU 46	10	627	7354	-24.27	8.27	-0.03
96	SLU 47	10	583	7294	-22.68	8.26	-0.03
96	SLU 48	10	694	7462	-26.76	8.27	-0.03
96	SLU 49	10	639	7436	-24.8	8.35	-0.03
96	SLU 50	10	686	7419	-26.48	8.2	-0.03
96	SLU 51	10	632	7393	-24.51	8.28	-0.03
96	SLU 52	11	663	7973	-25.75	8.61	-0.03
96	SLU 53	11	774	8140	-29.83	8.62	-0.03
96	SLU 54	11	720	8115	-27.87	8.71	-0.03
96	SLU 55	11	676	8055	-26.27	8.69	-0.03
96	SLU 56	11	786	8222	-30.35	8.7	-0.03
96	SLU 57	11	732	8197	-28.39	8.79	-0.03
96	SLU 58	11	779	8180	-30.07	8.63	-0.03
96	SLU 59	11	725	8154	-28.11	8.72	-0.03
96	SLU 60	12	794	8342	-30.56	8.66	-0.03
96	SLU 61	12	739	8316	-28.6	8.74	-0.03
96	SLU 62	12	806	8424	-31.09	8.74	-0.03
96	SLU 63	12	752	8398	-29.12	8.82	-0.03
96	SLU 64	11	737	7854	-28.42	8.79	-0.03
96	SLU 65	11	646	7811	-25.15	8.93	-0.03
96	SLU 66	11	757	7979	-29.23	8.94	-0.03
96	SLU 67	11	702	7953	-27.27	9.02	-0.03
96	SLU 68	11	659	7893	-25.67	9.01	-0.03
96	SLU 69	11	769	8061	-29.75	9.02	-0.03
96	SLU 70	11	715	8035	-27.79	9.1	-0.03
96	SLU 71	11	762	8018	-29.47	8.95	-0.03
96	SLU 72	11	708	7992	-27.51	9.04	-0.03
96	SLU 73	12	739	8571	-28.74	9.36	-0.03
96	SLU 74	12	849	8739	-32.82	9.38	-0.03
96	SLU 75	12	795	8713	-30.86	9.46	-0.03
96	SLU 76	12	752	8653	-29.27	9.45	-0.03
96	SLU 77	12	862	8821	-33.35	9.46	-0.03
96	SLU 78	13	808	8795	-31.38	9.54	-0.03
96	SLU 79	12	855	8779	-33.06	9.39	-0.03
96	SLU 80	12	800	8753	-31.1	9.47	-0.03
96	SLU 81	13	869	8940	-33.56	9.41	-0.03

Nodo	Cont.	Reazione a traslazione			Reazione a rotazione		
Ind.	N.br.	x	y	z	x	y	z
96	SLU 82	13	815	8915	-31.59	9.5	-0.03
96	SLU 83	13	882	9022	-34.08	9.49	-0.03
96	SLU 84	13	827	8997	-32.12	9.58	-0.03
96	SLE RA 1	8	550	5910	-21.21	6.59	-0.02
96	SLE RA 2	8	490	5881	-19.02	6.69	-0.02
96	SLE RA 3	8	563	5993	-21.74	6.69	-0.02
96	SLE RA 4	8	527	5976	-20.43	6.75	-0.02
96	SLE RA 5	8	498	5936	-19.37	6.74	-0.02
96	SLE RA 6	9	572	6048	-22.09	6.75	-0.02
96	SLE RA 7	9	536	6030	-20.78	6.81	-0.02
96	SLE RA 8	8	567	6019	-21.9	6.7	-0.02
96	SLE RA 9	9	531	6002	-20.59	6.76	-0.02
96	SLE RA 10	9	552	6388	-21.42	6.98	-0.02
96	SLE RA 11	9	625	6500	-24.14	6.99	-0.02
96	SLE RA 12	9	589	6483	-22.83	7.04	-0.02
96	SLE RA 13	9	560	6443	-21.77	7.03	-0.02
96	SLE RA 14	9	634	6555	-24.49	7.04	-0.02
96	SLE RA 15	9	597	6537	-23.18	7.1	-0.02
96	SLE RA 16	9	629	6526	-24.3	6.99	-0.02
96	SLE RA 17	9	593	6509	-22.99	7.05	-0.02
96	SLE RA 18	9	638	6634	-24.63	7.01	-0.02
96	SLE RA 19	9	602	6617	-23.32	7.07	-0.02
96	SLE RA 20	9	647	6689	-24.98	7.06	-0.02
96	SLE RA 21	9	611	6672	-23.67	7.12	-0.02
96	SLE FR 1	8	550	5910	-21.21	6.59	-0.02
96	SLE FR 2	8	538	5904	-20.77	6.61	-0.02
96	SLE FR 3	8	553	5932	-21.34	6.62	-0.02
96	SLE FR 4	9	564	6121	-21.8	6.74	-0.02
96	SLE FR 5	9	580	6149	-22.37	6.74	-0.02
96	SLE FR 6	9	594	6272	-22.92	6.8	-0.02
96	SLE QP 1	8	550	5910	-21.21	6.59	-0.02
96	SLE QP 2	9	577	6127	-22.23	6.72	-0.02
96	SLD 1	21	938	6497	-34.91	21.1	-0.06
96	SLD 2	21	938	6497	-34.91	21.1	-0.06
96	SLD 3	18	533	6150	-20.67	17.96	-0.05
96	SLD 4	18	533	6150	-20.67	17.96	-0.05
96	SLD 5	18	1299	6765	-47.63	15.79	-0.05
96	SLD 6	18	1299	6765	-47.63	15.79	-0.05
96	SLD 7	6	-51	5608	-0.17	5.33	-0.02
96	SLD 8	6	-51	5608	-0.17	5.33	-0.02
96	SLD 9	11	1204	6647	-44.29	8.1	-0.03
96	SLD 10	11	1204	6647	-44.29	8.1	-0.03
96	SLD 11	-1	-146	5490	3.17	-2.35	0
96	SLD 12	-1	-146	5490	3.17	-2.35	0
96	SLD 13	0	620	6104	-23.79	-4.53	0.01
96	SLD 14	0	620	6104	-23.79	-4.53	0.01
96	SLD 15	-4	215	5757	-9.55	-7.67	0.02
96	SLD 16	-4	215	5757	-9.55	-7.67	0.02
96	SLV 1	38	1425	6996	-52	40.38	-0.11
96	SLV 2	38	1425	6996	-52	40.38	-0.11
96	SLV 3	29	475	6181	-18.57	33.04	-0.09
96	SLV 4	29	475	6181	-18.57	33.04	-0.09
96	SLV 5	30	2273	7623	-81.86	27.95	-0.08
96	SLV 6	30	2273	7623	-81.86	27.95	-0.08
96	SLV 7	2	-896	4908	29.57	3.48	-0.01
96	SLV 8	2	-896	4908	29.57	3.48	-0.01
96	SLV 9	15	2049	7347	-74.03	9.96	-0.03
96	SLV 10	15	2049	7347	-74.03	9.96	-0.03
96	SLV 11	-13	-1120	4631	37.4	-14.51	0.04
96	SLV 12	-13	-1120	4631	37.4	-14.51	0.04
96	SLV 13	-12	678	6073	-25.89	-19.6	0.05
96	SLV 14	-12	678	6073	-25.89	-19.6	0.05
96	SLV 15	-21	-272	5259	7.54	-26.94	0.07
96	SLV 16	-21	-272	5259	7.54	-26.94	0.07
97	SLU 1	-2	995	3090	-46.37	-0.39	0
97	SLU 2	-2	1214	3343	-56.72	-0.68	0
97	SLU 3	-2	1022	3150	-47.38	-0.4	0
97	SLU 4	-2	1154	3301	-53.59	-0.58	0
97	SLU 5	-2	1231	3373	-57.23	-0.7	0
97	SLU 6	-2	1039	3180	-47.9	-0.42	0
97	SLU 7	-2	1170	3331	-54.11	-0.6	0
97	SLU 8	-2	1028	3151	-47.4	-0.41	0
97	SLU 9	-2	1159	3302	-53.61	-0.59	0
97	SLU 10	-2	1345	3768	-62.49	-0.74	0
97	SLU 11	-2	1154	3575	-53.16	-0.45	0
97	SLU 12	-2	1285	3727	-59.37	-0.63	0
97	SLU 13	-2	1362	3798	-63.01	-0.75	0
97	SLU 14	-2	1170	3605	-53.67	-0.47	0
97	SLU 15	-2	1302	3757	-59.88	-0.65	0
97	SLU 16	-2	1159	3576	-53.18	-0.47	0
97	SLU 17	-2	1290	3728	-59.38	-0.64	0
97	SLU 18	-2	1182	3698	-54.62	-0.46	0
97	SLU 19	-2	1314	3850	-60.83	-0.64	0
97	SLU 20	-2	1199	3729	-55.14	-0.47	0
97	SLU 21	-2	1330	3880	-61.34	-0.65	0
97	SLU 22	-2	1122	3471	-51.84	-0.43	0
97	SLU 23	-2	1341	3724	-62.18	-0.73	0
97	SLU 24	-2	1149	3531	-52.85	-0.45	0
97	SLU 25	-2	1281	3682	-59.06	-0.63	0
97	SLU 26	-2	1357	3754	-62.7	-0.74	0

Nodo	Cont.	Reazione a traslazione			Reazione a rotazione		
Ind.	N.br.	x	y	z	x	y	z
97	SLU 27	-2	1166	3561	-53.37	-0.46	0
97	SLU 28	-2	1297	3712	-59.58	-0.64	0
97	SLU 29	-2	1155	3532	-52.87	-0.46	0
97	SLU 30	-2	1286	3683	-59.08	-0.64	0
97	SLU 31	-2	1472	4149	-67.96	-0.78	0
97	SLU 32	-2	1280	3956	-58.63	-0.5	0
97	SLU 33	-2	1412	4108	-64.83	-0.68	0
97	SLU 34	-2	1489	4179	-68.47	-0.79	0
97	SLU 35	-2	1297	3986	-59.14	-0.51	0
97	SLU 36	-2	1428	4138	-65.35	-0.69	0
97	SLU 37	-2	1286	3957	-58.64	-0.51	0
97	SLU 38	-2	1417	4109	-64.85	-0.69	0
97	SLU 39	-2	1309	4079	-60.09	-0.5	0
97	SLU 40	-2	1441	4231	-66.29	-0.68	0
97	SLU 41	-2	1326	4110	-60.6	-0.52	0
97	SLU 42	-2	1457	4261	-66.81	-0.7	0
97	SLU 43	-2	1250	3887	-58.41	-0.49	0
97	SLU 44	-2	1469	4139	-68.75	-0.79	0
97	SLU 45	-2	1277	3946	-59.42	-0.5	0
97	SLU 46	-2	1409	4097	-65.63	-0.68	0
97	SLU 47	-2	1485	4169	-69.27	-0.8	0
97	SLU 48	-2	1294	3976	-59.94	-0.52	0
97	SLU 49	-2	1425	4128	-66.14	-0.7	0
97	SLU 50	-2	1283	3947	-59.44	-0.52	0
97	SLU 51	-2	1414	4099	-65.65	-0.69	0
97	SLU 52	-3	1600	4565	-74.53	-0.84	0
97	SLU 53	-2	1409	4372	-65.2	-0.56	0
97	SLU 54	-3	1540	4523	-71.4	-0.73	0
97	SLU 55	-3	1617	4595	-75.04	-0.85	0
97	SLU 56	-2	1425	4402	-65.71	-0.57	0
97	SLU 57	-3	1557	4553	-71.92	-0.75	0
97	SLU 58	-2	1414	4373	-65.21	-0.57	0
97	SLU 59	-3	1545	4524	-71.42	-0.74	0
97	SLU 60	-2	1437	4495	-66.66	-0.56	0
97	SLU 61	-3	1569	4646	-72.86	-0.74	0
97	SLU 62	-2	1454	4525	-67.17	-0.57	0
97	SLU 63	-3	1585	4676	-73.38	-0.75	0
97	SLU 64	-2	1377	4268	-63.87	-0.53	0
97	SLU 65	-3	1596	4520	-74.22	-0.83	0
97	SLU 66	-2	1404	4327	-64.89	-0.55	0
97	SLU 67	-3	1536	4478	-71.1	-0.73	0
97	SLU 68	-3	1612	4550	-74.74	-0.84	0
97	SLU 69	-2	1421	4357	-65.4	-0.56	0
97	SLU 70	-3	1552	4509	-71.61	-0.74	0
97	SLU 71	-2	1410	4328	-64.91	-0.56	0
97	SLU 72	-3	1541	4480	-71.11	-0.74	0
97	SLU 73	-3	1727	4946	-79.99	-0.88	0
97	SLU 74	-2	1535	4753	-70.66	-0.6	0
97	SLU 75	-3	1667	4904	-76.87	-0.78	0
97	SLU 76	-3	1743	4976	-80.51	-0.9	0
97	SLU 77	-2	1552	4783	-71.18	-0.61	0
97	SLU 78	-3	1683	4934	-77.39	-0.79	0
97	SLU 79	-2	1541	4754	-70.68	-0.61	0
97	SLU 80	-3	1672	4905	-76.89	-0.79	0
97	SLU 81	-2	1564	4876	-72.12	-0.61	0
97	SLU 82	-3	1695	5027	-78.33	-0.78	0
97	SLU 83	-3	1580	4906	-72.64	-0.62	0
97	SLU 84	-3	1712	5057	-78.85	-0.8	0
97	SLE RA 1	-2	1031	3199	-47.93	-0.4	0
97	SLE RA 2	-2	1177	3367	-54.83	-0.6	0
97	SLE RA 3	-2	1050	3239	-48.61	-0.41	0
97	SLE RA 4	-2	1137	3340	-52.75	-0.53	0
97	SLE RA 5	-2	1188	3388	-55.17	-0.61	0
97	SLE RA 6	-2	1061	3259	-48.95	-0.42	0
97	SLE RA 7	-2	1148	3360	-53.09	-0.54	0
97	SLE RA 8	-2	1053	3240	-48.62	-0.42	0
97	SLE RA 9	-2	1141	3340	-52.76	-0.54	0
97	SLE RA 10	-2	1265	3651	-58.68	-0.63	0
97	SLE RA 11	-2	1137	3523	-52.46	-0.45	0
97	SLE RA 12	-2	1225	3623	-56.6	-0.56	0
97	SLE RA 13	-2	1276	3671	-59.02	-0.64	0
97	SLE RA 14	-2	1148	3543	-52.8	-0.45	0
97	SLE RA 15	-2	1236	3643	-56.94	-0.57	0
97	SLE RA 16	-2	1141	3523	-52.47	-0.45	0
97	SLE RA 17	-2	1228	3624	-56.61	-0.57	0
97	SLE RA 18	-2	1156	3605	-53.43	-0.45	0
97	SLE RA 19	-2	1244	3706	-57.57	-0.57	0
97	SLE RA 20	-2	1167	3625	-53.78	-0.46	0
97	SLE RA 21	-2	1255	3726	-57.91	-0.58	0
97	SLE FR 1	-2	1031	3199	-47.93	-0.4	0
97	SLE FR 2	-2	1060	3233	-49.31	-0.44	0
97	SLE FR 3	-2	1036	3207	-48.07	-0.4	0
97	SLE FR 4	-2	1098	3355	-50.96	-0.45	0
97	SLE FR 5	-2	1073	3329	-49.72	-0.42	0
97	SLE FR 6	-2	1094	3402	-50.68	-0.42	0
97	SLE QP 1	-2	1031	3199	-47.93	-0.4	0
97	SLE QP 2	-2	1069	3321	-49.58	-0.41	0
97	SLD 1	0	1438	3690	-67.26	0.25	0.01
97	SLD 2	0	1438	3690	-67.26	0.25	0.01
97	SLD 3	2	1010	3256	-46.73	0.79	0.01

Nodo	Cont.	Reazione a traslazione			Reazione a rotazione		
Ind.	N.br.	x	y	z	x	y	z
97	SLD 4	2	1010	3256	-46.73	0.79	0.01
97	SLD 5	-3	1829	4090	-86.03	-1.04	0.01
97	SLD 6	-3	1829	4090	-86.03	-1.04	0.01
97	SLD 7	1	402	2643	-17.59	0.77	0
97	SLD 8	1	402	2643	-17.59	0.77	0
97	SLD 9	-5	1736	3998	-81.58	-1.6	0
97	SLD 10	-5	1736	3998	-81.58	-1.6	0
97	SLD 11	0	308	2552	-13.14	0.21	0
97	SLD 12	0	308	2552	-13.14	0.21	0
97	SLD 13	-5	1127	3385	-52.43	-1.62	0
97	SLD 14	-5	1127	3385	-52.43	-1.62	0
97	SLD 15	-4	699	2951	-31.9	-1.08	-0.01
97	SLD 16	-4	699	2951	-31.9	-1.08	-0.01
97	SLV 1	3	1953	4205	-91.94	1.1	0.02
97	SLV 2	3	1953	4205	-91.94	1.1	0.02
97	SLV 3	6	927	3165	-42.67	2.45	0.01
97	SLV 4	6	927	3165	-42.67	2.45	0.01
97	SLV 5	-5	2891	5163	-137.02	-2.01	0.02
97	SLV 6	-5	2891	5163	-137.02	-2.01	0.02
97	SLV 7	5	-531	1697	27.23	2.5	-0.01
97	SLV 8	5	-531	1697	27.23	2.5	-0.01
97	SLV 9	-9	2668	4945	-126.39	-3.33	0.01
97	SLV 10	-9	2668	4945	-126.39	-3.33	0.01
97	SLV 11	2	-754	1478	37.86	1.18	-0.01
97	SLV 12	2	-754	1478	37.86	1.18	-0.01
97	SLV 13	-10	1210	3477	-56.5	-3.28	-0.01
97	SLV 14	-10	1210	3477	-56.5	-3.28	-0.01
97	SLV 15	-6	184	2437	-7.22	-1.93	-0.02
97	SLV 16	-6	184	2437	-7.22	-1.93	-0.02
98	SLU 1	5	1333	6369	-48.33	0.32	0.05
98	SLU 2	12	1361	6694	-50.46	2.6	0.08
98	SLU 3	5	1370	6530	-49.7	0.33	0.05
98	SLU 4	10	1387	6725	-50.97	1.7	0.07
98	SLU 5	12	1380	6783	-51.2	2.6	0.08
98	SLU 6	5	1390	6619	-50.44	0.32	0.05
98	SLU 7	10	1406	6814	-51.72	1.69	0.07
98	SLU 8	5	1373	6548	-49.81	0.3	0.05
98	SLU 9	10	1389	6743	-51.09	1.67	0.07
98	SLU 10	13	1531	7509	-56.31	2.61	0.08
98	SLU 11	6	1541	7345	-55.55	0.34	0.06
98	SLU 12	10	1557	7540	-56.82	1.71	0.07
98	SLU 13	13	1551	7598	-57.05	2.6	0.08
98	SLU 14	6	1561	7434	-56.29	0.33	0.06
98	SLU 15	10	1577	7629	-57.57	1.7	0.07
98	SLU 16	6	1543	7363	-55.66	0.31	0.06
98	SLU 17	10	1560	7558	-56.94	1.68	0.07
98	SLU 18	6	1577	7534	-56.69	0.33	0.06
98	SLU 19	10	1594	7728	-57.96	1.7	0.08
98	SLU 20	6	1597	7623	-57.43	0.32	0.06
98	SLU 21	10	1613	7818	-58.71	1.69	0.08
98	SLU 22	6	1499	7134	-54.11	0.35	0.06
98	SLU 23	13	1527	7459	-56.24	2.64	0.08
98	SLU 24	6	1536	7295	-55.48	0.36	0.06
98	SLU 25	10	1553	7489	-56.76	1.73	0.07
98	SLU 26	13	1546	7548	-56.98	2.63	0.08
98	SLU 27	6	1556	7384	-56.22	0.35	0.06
98	SLU 28	10	1572	7579	-57.5	1.72	0.07
98	SLU 29	6	1539	7313	-55.6	0.34	0.06
98	SLU 30	10	1555	7508	-56.87	1.71	0.07
98	SLU 31	14	1697	8274	-62.09	2.65	0.09
98	SLU 32	6	1707	8110	-61.33	0.37	0.07
98	SLU 33	11	1724	8305	-62.61	1.74	0.08
98	SLU 34	14	1717	8363	-62.83	2.64	0.09
98	SLU 35	6	1727	8199	-62.07	0.36	0.07
98	SLU 36	11	1743	8394	-63.35	1.73	0.08
98	SLU 37	6	1709	8128	-61.45	0.35	0.07
98	SLU 38	11	1726	8323	-62.72	1.72	0.08
98	SLU 39	7	1743	8298	-62.47	0.37	0.07
98	SLU 40	11	1760	8493	-63.75	1.74	0.08
98	SLU 41	7	1763	8388	-63.21	0.36	0.07
98	SLU 42	11	1779	8583	-64.49	1.73	0.08
98	SLU 43	6	1676	8018	-60.85	0.4	0.06
98	SLU 44	14	1704	8342	-62.97	2.69	0.09
98	SLU 45	7	1713	8178	-62.21	0.41	0.07
98	SLU 46	11	1730	8373	-63.49	1.78	0.08
98	SLU 47	14	1723	8432	-63.72	2.68	0.09
98	SLU 48	7	1733	8268	-62.95	0.4	0.07
98	SLU 49	11	1749	8463	-64.23	1.77	0.08
98	SLU 50	6	1716	8197	-62.33	0.39	0.07
98	SLU 51	11	1732	8391	-63.61	1.76	0.08
98	SLU 52	14	1874	9157	-68.82	2.7	0.1
98	SLU 53	7	1884	8993	-68.06	0.42	0.07
98	SLU 54	11	1900	9188	-69.34	1.79	0.09
98	SLU 55	14	1894	9247	-69.57	2.69	0.1
98	SLU 56	7	1904	9083	-68.8	0.41	0.07
98	SLU 57	12	1920	9278	-70.08	1.78	0.09
98	SLU 58	7	1886	9012	-68.18	0.4	0.07
98	SLU 59	11	1903	9207	-69.46	1.77	0.09
98	SLU 60	7	1920	9182	-69.2	0.42	0.07
98	SLU 61	12	1937	9377	-70.48	1.79	0.09

Nodo	Cont.	Reazione a traslazione			Reazione a rotazione		
Ind.	N.br.	x	y	z	x	y	z
98	SLU 62	7	1940	9272	-69.94	0.41	0.07
98	SLU 63	12	1956	9466	-71.22	1.78	0.09
98	SLU 64	7	1842	8782	-66.63	0.44	0.07
98	SLU 65	14	1870	9107	-68.76	2.72	0.1
98	SLU 66	7	1879	8943	-68	0.44	0.07
98	SLU 67	12	1896	9138	-69.27	1.81	0.09
98	SLU 68	14	1889	9197	-69.5	2.71	0.1
98	SLU 69	7	1899	9033	-68.74	0.44	0.07
98	SLU 70	12	1915	9227	-70.02	1.81	0.09
98	SLU 71	7	1882	8961	-68.11	0.42	0.07
98	SLU 72	11	1898	9156	-69.39	1.79	0.09
98	SLU 73	15	2040	9922	-74.61	2.73	0.1
98	SLU 74	8	2050	9758	-73.85	0.45	0.08
98	SLU 75	12	2067	9953	-75.12	1.82	0.09
98	SLU 76	15	2060	10012	-75.35	2.72	0.1
98	SLU 77	8	2070	9848	-74.59	0.44	0.08
98	SLU 78	12	2086	10043	-75.87	1.82	0.09
98	SLU 79	8	2052	9776	-73.96	0.43	0.08
98	SLU 80	12	2069	9971	-75.24	1.8	0.09
98	SLU 81	8	2086	9947	-74.99	0.45	0.08
98	SLU 82	12	2103	10142	-76.26	1.82	0.1
98	SLU 83	8	2106	10036	-75.73	0.44	0.08
98	SLU 84	12	2122	10231	-77	1.81	0.1
98	SLE RA 1	5	1381	6588	-49.98	0.33	0.05
98	SLE RA 2	10	1399	6804	-51.4	1.85	0.07
98	SLE RA 3	5	1405	6695	-50.89	0.33	0.05
98	SLE RA 4	8	1416	6825	-51.75	1.25	0.06
98	SLE RA 5	10	1412	6864	-51.9	1.85	0.07
98	SLE RA 6	5	1419	6754	-51.39	0.33	0.05
98	SLE RA 7	8	1429	6884	-52.24	1.24	0.06
98	SLE RA 8	5	1407	6707	-50.97	0.32	0.05
98	SLE RA 9	8	1418	6837	-51.82	1.23	0.06
98	SLE RA 10	10	1513	7347	-55.3	1.86	0.07
98	SLE RA 11	6	1519	7238	-54.79	0.34	0.06
98	SLE RA 12	9	1530	7368	-55.64	1.25	0.07
98	SLE RA 13	11	1526	7407	-55.8	1.85	0.07
98	SLE RA 14	6	1532	7298	-55.29	0.33	0.06
98	SLE RA 15	9	1543	7428	-56.14	1.25	0.07
98	SLE RA 16	6	1521	7250	-54.87	0.32	0.06
98	SLE RA 17	9	1532	7380	-55.72	1.24	0.07
98	SLE RA 18	6	1543	7364	-55.55	0.34	0.06
98	SLE RA 19	9	1554	7494	-56.4	1.25	0.07
98	SLE RA 20	6	1556	7424	-56.05	0.33	0.06
98	SLE RA 21	9	1567	7553	-56.9	1.25	0.07
98	SLE FR 1	5	1381	6588	-49.98	0.33	0.05
98	SLE FR 2	6	1384	6631	-50.27	0.63	0.06
98	SLE FR 3	5	1386	6611	-50.18	0.33	0.05
98	SLE FR 4	6	1433	6864	-51.94	0.64	0.06
98	SLE FR 5	5	1435	6844	-51.85	0.33	0.06
98	SLE FR 6	6	1462	6976	-52.77	0.33	0.06
98	SLE QP 1	5	1381	6588	-49.98	0.33	0.05
98	SLE QP 2	5	1429	6820	-51.65	0.33	0.06
98	SLD 1	18	1341	5565	-50.99	6.88	0.04
98	SLD 2	18	1341	5565	-50.99	6.88	0.04
98	SLD 3	6	1019	4567	-34.54	3.7	0
98	SLD 4	6	1019	4567	-34.54	3.7	0
98	SLD 5	27	1892	7957	-76.39	7.13	0.11
98	SLD 6	27	1892	7957	-76.39	7.13	0.11
98	SLD 7	-12	818	4631	-21.58	-3.49	-0.02
98	SLD 8	-12	818	4631	-21.58	-3.49	-0.02
98	SLD 9	23	2041	9010	-81.73	4.16	0.13
98	SLD 10	23	2041	9010	-81.73	4.16	0.13
98	SLD 11	-16	967	5684	-26.91	-6.47	0.01
98	SLD 12	-16	967	5684	-26.91	-6.47	0.01
98	SLD 13	4	1840	9074	-68.77	-3.03	0.11
98	SLD 14	4	1840	9074	-68.77	-3.03	0.11
98	SLD 15	-7	1518	8076	-52.32	-6.22	0.07
98	SLD 16	-7	1518	8076	-52.32	-6.22	0.07
98	SLV 1	37	1220	3893	-49.95	16.23	0.02
98	SLV 2	37	1220	3893	-49.95	16.23	0.02
98	SLV 3	8	469	1534	-11.63	8.31	-0.07
98	SLV 4	8	469	1534	-11.63	8.31	-0.07
98	SLV 5	58	2507	9519	-109.26	17.12	0.18
98	SLV 6	58	2507	9519	-109.26	17.12	0.18
98	SLV 7	-37	1	1657	18.47	-9.3	-0.12
98	SLV 8	-37	1	1657	18.47	-9.3	-0.12
98	SLV 9	48	2858	11983	-121.78	9.96	0.23
98	SLV 10	48	2858	11983	-121.78	9.96	0.23
98	SLV 11	-47	352	4121	5.95	-16.46	-0.07
98	SLV 12	-47	352	4121	5.95	-16.46	-0.07
98	SLV 13	3	2390	12106	-91.68	-7.64	0.18
98	SLV 14	3	2390	12106	-91.68	-7.64	0.18
98	SLV 15	-26	1639	9748	-53.36	-15.57	0.09
98	SLV 16	-26	1639	9748	-53.36	-15.57	0.09
99	SLU 1	0	-93	440	3.75	-0.25	-0.02
99	SLU 2	0	-94	439	3.82	-0.24	-0.02
99	SLU 3	0	-97	435	3.93	-0.25	-0.02
99	SLU 4	0	-98	434	3.97	-0.24	-0.02
99	SLU 5	0	-97	435	3.94	-0.24	-0.02
99	SLU 6	0	-100	431	4.06	-0.25	-0.02

Nodo	Cont.	Reazione a traslazione			Reazione a rotazione		
Ind.	N.br.	x	y	z	x	y	z
99	SLU 7	0	-101	430	4.1	-0.25	-0.02
99	SLU 8	0	-98	432	4	-0.25	-0.02
99	SLU 9	0	-99	431	4.04	-0.25	-0.02
99	SLU 10	-1	-134	581	5.13	-0.8	-0.02
99	SLU 11	-1	-136	577	5.25	-0.81	-0.02
99	SLU 12	-1	-137	576	5.29	-0.81	-0.02
99	SLU 13	-1	-136	577	5.26	-0.8	-0.02
99	SLU 14	-1	-139	573	5.38	-0.82	-0.02
99	SLU 15	-1	-140	572	5.41	-0.81	-0.02
99	SLU 16	-1	-138	575	5.32	-0.82	-0.02
99	SLU 17	-1	-139	574	5.36	-0.81	-0.02
99	SLU 18	-1	-149	644	5.63	-1.05	-0.03
99	SLU 19	-1	-150	643	5.67	-1.05	-0.03
99	SLU 20	-1	-152	640	5.76	-1.05	-0.03
99	SLU 21	-1	-153	639	5.8	-1.05	-0.03
99	SLU 22	0	-116	460	4.66	-0.39	-0.02
99	SLU 23	0	-118	459	4.72	-0.38	-0.02
99	SLU 24	0	-121	455	4.84	-0.39	-0.02
99	SLU 25	0	-121	454	4.88	-0.39	-0.02
99	SLU 26	0	-121	455	4.85	-0.38	-0.02
99	SLU 27	0	-123	451	4.97	-0.4	-0.02
99	SLU 28	0	-124	450	5	-0.39	-0.02
99	SLU 29	0	-122	452	4.91	-0.4	-0.02
99	SLU 30	0	-123	451	4.95	-0.39	-0.02
99	SLU 31	-1	-157	601	6.04	-0.94	-0.03
99	SLU 32	-1	-160	597	6.16	-0.96	-0.03
99	SLU 33	-1	-161	596	6.2	-0.95	-0.03
99	SLU 34	-1	-160	597	6.17	-0.95	-0.03
99	SLU 35	-1	-163	593	6.28	-0.96	-0.03
99	SLU 36	-1	-164	592	6.32	-0.95	-0.03
99	SLU 37	-1	-162	595	6.23	-0.96	-0.03
99	SLU 38	-1	-163	594	6.27	-0.95	-0.03
99	SLU 39	-1	-173	664	6.54	-1.2	-0.03
99	SLU 40	-1	-174	663	6.58	-1.19	-0.03
99	SLU 41	-1	-176	660	6.67	-1.2	-0.03
99	SLU 42	-1	-177	659	6.7	-1.19	-0.03
99	SLU 43	0	-112	566	4.57	-0.27	-0.02
99	SLU 44	0	-114	564	4.63	-0.26	-0.02
99	SLU 45	0	-116	560	4.75	-0.28	-0.02
99	SLU 46	0	-117	559	4.79	-0.27	-0.02
99	SLU 47	0	-117	560	4.76	-0.27	-0.02
99	SLU 48	0	-119	556	4.87	-0.28	-0.02
99	SLU 49	0	-120	555	4.91	-0.27	-0.02
99	SLU 50	0	-118	558	4.82	-0.28	-0.02
99	SLU 51	0	-119	557	4.86	-0.27	-0.02
99	SLU 52	-1	-153	706	5.95	-0.83	-0.03
99	SLU 53	-1	-156	702	6.07	-0.84	-0.03
99	SLU 54	-1	-157	701	6.1	-0.83	-0.03
99	SLU 55	-1	-156	702	6.07	-0.83	-0.03
99	SLU 56	-1	-159	698	6.19	-0.84	-0.03
99	SLU 57	-1	-160	697	6.23	-0.83	-0.03
99	SLU 58	-1	-158	700	6.13	-0.84	-0.03
99	SLU 59	-1	-158	699	6.17	-0.83	-0.03
99	SLU 60	-1	-169	769	6.45	-1.08	-0.03
99	SLU 61	-1	-170	768	6.49	-1.07	-0.03
99	SLU 62	-1	-172	765	6.57	-1.08	-0.03
99	SLU 63	-1	-172	764	6.61	-1.07	-0.03
99	SLU 64	0	-136	586	5.48	-0.42	-0.02
99	SLU 65	0	-137	584	5.54	-0.41	-0.02
99	SLU 66	0	-140	580	5.66	-0.42	-0.02
99	SLU 67	0	-141	579	5.69	-0.41	-0.02
99	SLU 68	0	-140	580	5.66	-0.41	-0.02
99	SLU 69	0	-143	576	5.78	-0.42	-0.02
99	SLU 70	0	-144	575	5.82	-0.42	-0.02
99	SLU 71	0	-142	578	5.73	-0.42	-0.02
99	SLU 72	0	-143	577	5.76	-0.42	-0.02
99	SLU 73	-1	-177	726	6.85	-0.97	-0.03
99	SLU 74	-1	-180	722	6.97	-0.98	-0.03
99	SLU 75	-1	-181	721	7.01	-0.98	-0.03
99	SLU 76	-1	-180	722	6.98	-0.97	-0.03
99	SLU 77	-1	-183	718	7.1	-0.98	-0.03
99	SLU 78	-1	-184	717	7.14	-0.98	-0.03
99	SLU 79	-1	-181	720	7.04	-0.99	-0.03
99	SLU 80	-1	-182	719	7.08	-0.98	-0.03
99	SLU 81	-1	-192	789	7.36	-1.22	-0.03
99	SLU 82	-1	-193	788	7.39	-1.22	-0.03
99	SLU 83	-1	-195	785	7.48	-1.22	-0.03
99	SLU 84	-1	-196	784	7.52	-1.22	-0.03
99	SLE RA 1	0	-99	446	4.01	-0.29	-0.02
99	SLE RA 2	0	-100	445	4.05	-0.28	-0.02
99	SLE RA 3	0	-102	442	4.13	-0.29	-0.02
99	SLE RA 4	0	-103	442	4.16	-0.29	-0.02
99	SLE RA 5	0	-102	442	4.14	-0.28	-0.02
99	SLE RA 6	0	-104	440	4.22	-0.29	-0.02
99	SLE RA 7	0	-105	439	4.24	-0.29	-0.02
99	SLE RA 8	0	-103	441	4.18	-0.29	-0.02
99	SLE RA 9	0	-104	440	4.2	-0.29	-0.02
99	SLE RA 10	0	-127	540	4.93	-0.66	-0.02
99	SLE RA 11	0	-129	537	5.01	-0.67	-0.02
99	SLE RA 12	0	-129	536	5.04	-0.66	-0.02

Nodo	Cont.	Reazione a traslazione			Reazione a rotazione		
Ind.	N.br.	x	y	z	x	y	z
99	SLE RA 13	0	-129	537	5.02	-0.66	-0.02
99	SLE RA 14	0	-130	534	5.09	-0.67	-0.02
99	SLE RA 15	0	-131	534	5.12	-0.66	-0.02
99	SLE RA 16	0	-130	536	5.06	-0.67	-0.02
99	SLE RA 17	0	-130	535	5.08	-0.66	-0.02
99	SLE RA 18	-1	-137	582	5.27	-0.83	-0.02
99	SLE RA 19	-1	-138	581	5.29	-0.82	-0.02
99	SLE RA 20	-1	-139	579	5.35	-0.83	-0.02
99	SLE RA 21	-1	-139	578	5.37	-0.82	-0.02
99	SLE FR 1	0	-99	446	4.01	-0.29	-0.02
99	SLE FR 2	0	-100	446	4.02	-0.29	-0.02
99	SLE FR 3	0	-100	445	4.05	-0.29	-0.02
99	SLE FR 4	0	-111	487	4.4	-0.45	-0.02
99	SLE FR 5	0	-111	486	4.42	-0.45	-0.02
99	SLE FR 6	0	-118	514	4.64	-0.56	-0.02
99	SLE QP 1	0	-99	446	4.01	-0.29	-0.02
99	SLE QP 2	0	-111	487	4.39	-0.45	-0.02
99	SLD 1	3	-89	520	3.31	2.63	-0.05
99	SLD 2	3	-89	520	3.31	2.63	-0.05
99	SLD 3	3	-152	419	6.33	2.98	-0.04
99	SLD 4	3	-152	419	6.33	2.98	-0.04
99	SLD 5	0	-8	650	-0.51	-0.06	-0.03
99	SLD 6	0	-8	650	-0.51	-0.06	-0.03
99	SLD 7	1	-220	314	9.54	1.11	-0.02
99	SLD 8	1	-220	314	9.54	1.11	-0.02
99	SLD 9	-2	-2	660	-0.77	-2.02	-0.02
99	SLD 10	-2	-2	660	-0.77	-2.02	-0.02
99	SLD 11	-1	-214	324	9.28	-0.84	0
99	SLD 12	-1	-214	324	9.28	-0.84	0
99	SLD 13	-4	-69	554	2.45	-3.89	0.01
99	SLD 14	-4	-69	554	2.45	-3.89	0.01
99	SLD 15	-3	-133	454	5.46	-3.53	0.01
99	SLD 16	-3	-133	454	5.46	-3.53	0.01
99	SLV 1	7	-59	565	1.87	6.77	-0.09
99	SLV 2	7	-59	565	1.87	6.77	-0.09
99	SLV 3	8	-208	329	8.94	7.6	-0.08
99	SLV 4	8	-208	329	8.94	7.6	-0.08
99	SLV 5	0	131	868	-7.08	0.46	-0.05
99	SLV 6	0	131	868	-7.08	0.46	-0.05
99	SLV 7	4	-366	81	16.47	3.22	-0.02
99	SLV 8	4	-366	81	16.47	3.22	-0.02
99	SLV 9	-4	145	892	-7.69	-4.12	-0.02
99	SLV 10	-4	145	892	-7.69	-4.12	-0.02
99	SLV 11	-1	-352	105	15.86	-1.36	0.02
99	SLV 12	-1	-352	105	15.86	-1.36	0.02
99	SLV 13	-9	-13	645	-0.16	-8.5	0.04
99	SLV 14	-9	-13	645	-0.16	-8.5	0.04
99	SLV 15	-8	-162	409	6.91	-7.67	0.05
99	SLV 16	-8	-162	409	6.91	-7.67	0.05
100	SLU 1	2	-20	5356	0.37	4.63	-0.07
100	SLU 2	2	-109	5349	3.86	4.73	-0.07
100	SLU 3	3	-17	5474	0.32	4.8	-0.07
100	SLU 4	3	-71	5470	2.41	4.86	-0.07
100	SLU 5	3	-108	5426	3.85	4.85	-0.07
100	SLU 6	3	-16	5551	0.3	4.92	-0.07
100	SLU 7	3	-70	5547	2.39	4.98	-0.07
100	SLU 8	3	-18	5510	0.35	4.87	-0.07
100	SLU 9	3	-71	5505	2.44	4.92	-0.07
100	SLU 10	3	-123	6129	4.31	5.85	-0.08
100	SLU 11	3	-31	6255	0.77	5.92	-0.09
100	SLU 12	3	-85	6251	2.86	5.98	-0.09
100	SLU 13	3	-122	6206	4.3	5.97	-0.09
100	SLU 14	3	-30	6331	0.75	6.04	-0.09
100	SLU 15	3	-84	6327	2.84	6.1	-0.09
100	SLU 16	3	-32	6290	0.8	5.99	-0.09
100	SLU 17	3	-85	6286	2.89	6.05	-0.09
100	SLU 18	3	-40	6471	1.02	6.23	-0.09
100	SLU 19	3	-93	6466	3.11	6.29	-0.09
100	SLU 20	3	-39	6547	1	6.35	-0.09
100	SLU 21	3	-92	6543	3.1	6.41	-0.09
100	SLU 22	3	-28	5978	0.68	5.24	-0.08
100	SLU 23	3	-118	5971	4.16	5.34	-0.08
100	SLU 24	3	-26	6096	0.62	5.42	-0.08
100	SLU 25	3	-79	6092	2.71	5.47	-0.08
100	SLU 26	3	-116	6048	4.15	5.46	-0.08
100	SLU 27	3	-25	6173	0.6	5.53	-0.08
100	SLU 28	3	-78	6169	2.69	5.59	-0.08
100	SLU 29	3	-26	6131	0.65	5.48	-0.08
100	SLU 30	3	-80	6127	2.74	5.54	-0.08
100	SLU 31	3	-132	6751	4.61	6.47	-0.09
100	SLU 32	3	-40	6877	1.07	6.54	-0.1
100	SLU 33	3	-93	6872	3.16	6.6	-0.1
100	SLU 34	3	-131	6828	4.6	6.58	-0.1
100	SLU 35	3	-39	6953	1.05	6.66	-0.1
100	SLU 36	3	-92	6949	3.15	6.71	-0.1
100	SLU 37	3	-40	6912	1.1	6.6	-0.1
100	SLU 38	3	-94	6908	3.19	6.66	-0.1
100	SLU 39	3	-49	7092	1.32	6.85	-0.1
100	SLU 40	3	-102	7088	3.41	6.91	-0.1
100	SLU 41	3	-48	7169	1.31	6.97	-0.1

Nodo	Cont.	Reazione a traslazione			Reazione a rotazione		
Ind.	N.br.	x	y	z	x	y	z
100	SLU 42	3	-101	7165	3.4	7.03	-0.1
100	SLU 43	3	-23	6750	0.38	5.81	-0.09
100	SLU 44	3	-112	6743	3.87	5.91	-0.09
100	SLU 45	3	-20	6868	0.32	5.98	-0.09
100	SLU 46	3	-74	6864	2.42	6.04	-0.09
100	SLU 47	3	-111	6820	3.86	6.03	-0.09
100	SLU 48	3	-19	6945	0.31	6.1	-0.09
100	SLU 49	3	-72	6941	2.4	6.16	-0.09
100	SLU 50	3	-21	6903	0.36	6.04	-0.09
100	SLU 51	3	-74	6899	2.45	6.1	-0.09
100	SLU 52	3	-126	7523	4.32	7.03	-0.1
100	SLU 53	3	-34	7648	0.78	7.1	-0.1
100	SLU 54	3	-88	7644	2.87	7.16	-0.1
100	SLU 55	3	-125	7600	4.31	7.15	-0.1
100	SLU 56	3	-33	7725	0.76	7.22	-0.1
100	SLU 57	3	-87	7721	2.85	7.28	-0.1
100	SLU 58	3	-35	7683	0.81	7.17	-0.1
100	SLU 59	3	-88	7679	2.9	7.23	-0.1
100	SLU 60	3	-43	7864	1.03	7.41	-0.11
100	SLU 61	3	-96	7860	3.12	7.47	-0.11
100	SLU 62	3	-42	7941	1.01	7.53	-0.11
100	SLU 63	3	-95	7937	3.11	7.59	-0.11
100	SLU 64	3	-31	7372	0.69	6.42	-0.1
100	SLU 65	3	-120	7365	4.17	6.52	-0.1
100	SLU 66	3	-29	7490	0.63	6.59	-0.1
100	SLU 67	3	-82	7486	2.72	6.65	-0.1
100	SLU 68	3	-119	7441	4.16	6.64	-0.1
100	SLU 69	3	-28	7567	0.61	6.71	-0.1
100	SLU 70	4	-81	7563	2.7	6.77	-0.1
100	SLU 71	3	-29	7525	0.66	6.66	-0.1
100	SLU 72	3	-83	7521	2.75	6.72	-0.1
100	SLU 73	3	-135	8145	4.62	7.64	-0.11
100	SLU 74	4	-43	8270	1.08	7.72	-0.11
100	SLU 75	4	-96	8266	3.17	7.78	-0.11
100	SLU 76	4	-134	8222	4.61	7.76	-0.11
100	SLU 77	4	-42	8347	1.06	7.83	-0.12
100	SLU 78	4	-95	8343	3.16	7.89	-0.12
100	SLU 79	4	-43	8305	1.11	7.78	-0.11
100	SLU 80	4	-97	8301	3.2	7.84	-0.11
100	SLU 81	3	-52	8486	1.33	8.03	-0.12
100	SLU 82	3	-105	8482	3.42	8.09	-0.12
100	SLU 83	4	-51	8563	1.32	8.14	-0.12
100	SLU 84	4	-104	8559	3.41	8.2	-0.12
100	SLE RA 1	2	-22	5534	0.46	4.81	-0.07
100	SLE RA 2	2	-82	5529	2.79	4.87	-0.07
100	SLE RA 3	3	-21	5613	0.42	4.92	-0.07
100	SLE RA 4	3	-56	5610	1.82	4.96	-0.07
100	SLE RA 5	3	-81	5580	2.78	4.95	-0.07
100	SLE RA 6	3	-20	5664	0.41	5	-0.08
100	SLE RA 7	3	-55	5661	1.81	5.04	-0.08
100	SLE RA 8	3	-21	5636	0.44	4.96	-0.08
100	SLE RA 9	3	-56	5633	1.84	5	-0.08
100	SLE RA 10	3	-91	6049	3.09	5.62	-0.08
100	SLE RA 11	3	-30	6133	0.72	5.67	-0.08
100	SLE RA 12	3	-66	6130	2.12	5.71	-0.08
100	SLE RA 13	3	-90	6100	3.08	5.7	-0.08
100	SLE RA 14	3	-29	6184	0.71	5.75	-0.08
100	SLE RA 15	3	-65	6181	2.11	5.79	-0.08
100	SLE RA 16	3	-30	6156	0.74	5.71	-0.08
100	SLE RA 17	3	-66	6153	2.14	5.75	-0.08
100	SLE RA 18	3	-36	6277	0.89	5.87	-0.09
100	SLE RA 19	3	-71	6274	2.29	5.91	-0.09
100	SLE RA 20	3	-35	6328	0.88	5.95	-0.09
100	SLE RA 21	3	-71	6325	2.28	5.99	-0.09
100	SLE FR 1	2	-22	5534	0.46	4.81	-0.07
100	SLE FR 2	2	-34	5533	0.93	4.82	-0.07
100	SLE FR 3	2	-22	5554	0.46	4.84	-0.07
100	SLE FR 4	3	-38	5756	1.05	5.14	-0.08
100	SLE FR 5	3	-26	5777	0.59	5.16	-0.08
100	SLE FR 6	3	-29	5905	0.68	5.34	-0.08
100	SLE QP 1	2	-22	5534	0.46	4.81	-0.07
100	SLE QP 2	2	-26	5757	0.59	5.13	-0.08
100	SLD 1	5	328	5528	-12.78	11.04	-0.05
100	SLD 2	5	328	5528	-12.78	11.04	-0.05
100	SLD 3	3	-77	5334	2.78	12.42	-0.04
100	SLD 4	3	-77	5334	2.78	12.42	-0.04
100	SLD 5	6	695	5982	-27.03	4.81	-0.09
100	SLD 6	6	695	5982	-27.03	4.81	-0.09
100	SLD 7	0	-657	5335	24.85	9.41	-0.05
100	SLD 8	0	-657	5335	24.85	9.41	-0.05
100	SLD 9	5	604	6178	-23.67	0.85	-0.11
100	SLD 10	5	604	6178	-23.67	0.85	-0.11
100	SLD 11	-1	-748	5531	28.21	5.44	-0.07
100	SLD 12	-1	-748	5531	28.21	5.44	-0.07
100	SLD 13	2	25	6180	-1.6	-2.17	-0.12
100	SLD 14	2	25	6180	-1.6	-2.17	-0.12
100	SLD 15	0	-381	5985	13.96	-0.79	-0.1
100	SLD 16	0	-381	5985	13.96	-0.79	-0.1
100	SLV 1	9	807	5222	-30.87	18.95	-0.01
100	SLV 2	9	807	5222	-30.87	18.95	-0.01

Nodo	Cont.	Reazione a traslazione			Reazione a rotazione		
Ind.	N.br.	x	y	z	x	y	z
100	SLV 3	5	-145	4766	5.71	22.24	0.02
100	SLV 4	5	-145	4766	5.71	22.24	0.02
100	SLV 5	12	1669	6288	-64.32	4.29	-0.1
100	SLV 6	12	1669	6288	-64.32	4.29	-0.1
100	SLV 7	-4	-1507	4768	57.6	15.25	-0.01
100	SLV 8	-4	-1507	4768	57.6	15.25	-0.01
100	SLV 9	9	1455	6745	-56.42	-5	-0.15
100	SLV 10	9	1455	6745	-56.42	-5	-0.15
100	SLV 11	-7	-1722	5225	65.5	5.97	-0.05
100	SLV 12	-7	-1722	5225	65.5	5.97	-0.05
100	SLV 13	0	93	6747	-4.53	-11.99	-0.17
100	SLV 14	0	93	6747	-4.53	-11.99	-0.17
100	SLV 15	-4	-860	6291	32.05	-8.7	-0.14
100	SLV 16	-4	-860	6291	32.05	-8.7	-0.14
101	SLU 1	6	1436	6417	-69.42	11.54	-0.2
101	SLU 2	1	1440	6640	-69.8	8.11	-0.11
101	SLU 3	6	1483	6559	-71.55	11.84	-0.21
101	SLU 4	3	1486	6693	-71.78	9.79	-0.15
101	SLU 5	1	1470	6709	-71.04	8.27	-0.12
101	SLU 6	6	1512	6628	-72.78	12	-0.21
101	SLU 7	3	1515	6762	-73.01	9.94	-0.16
101	SLU 8	6	1494	6555	-71.89	11.85	-0.21
101	SLU 9	3	1497	6689	-72.12	9.8	-0.15
101	SLU 10	1	1620	7428	-78.63	9.7	-0.14
101	SLU 11	7	1662	7346	-80.38	13.42	-0.24
101	SLU 12	4	1665	7480	-80.61	11.37	-0.18
101	SLU 13	2	1649	7497	-79.87	9.85	-0.15
101	SLU 14	7	1692	7415	-81.61	13.58	-0.24
101	SLU 15	4	1694	7550	-81.84	11.52	-0.19
101	SLU 16	7	1674	7342	-80.72	13.43	-0.24
101	SLU 17	4	1676	7476	-80.95	11.38	-0.18
101	SLU 18	7	1692	7542	-82.03	13.8	-0.24
101	SLU 19	4	1695	7676	-82.26	11.74	-0.19
101	SLU 20	7	1721	7611	-83.27	13.95	-0.25
101	SLU 21	4	1724	7745	-83.5	11.9	-0.19
101	SLU 22	7	1616	7160	-78.18	13.04	-0.23
101	SLU 23	1	1620	7383	-78.56	9.61	-0.14
101	SLU 24	7	1663	7302	-80.31	13.34	-0.23
101	SLU 25	4	1666	7436	-80.54	11.29	-0.18
101	SLU 26	1	1650	7452	-79.8	9.77	-0.14
101	SLU 27	7	1692	7371	-81.54	13.5	-0.24
101	SLU 28	4	1695	7505	-81.77	11.44	-0.18
101	SLU 29	7	1674	7298	-80.65	13.35	-0.23
101	SLU 30	4	1677	7432	-80.88	11.3	-0.18
101	SLU 31	2	1800	8171	-87.39	11.2	-0.17
101	SLU 32	8	1842	8089	-89.14	14.92	-0.26
101	SLU 33	5	1845	8224	-89.37	12.87	-0.21
101	SLU 34	2	1829	8240	-88.63	11.35	-0.17
101	SLU 35	8	1872	8158	-90.37	15.08	-0.26
101	SLU 36	5	1874	8293	-90.61	13.02	-0.21
101	SLU 37	8	1854	8085	-89.48	14.93	-0.26
101	SLU 38	5	1856	8219	-89.71	12.88	-0.21
101	SLU 39	8	1872	8285	-90.79	15.3	-0.27
101	SLU 40	5	1875	8419	-91.02	13.24	-0.22
101	SLU 41	8	1901	8354	-92.03	15.45	-0.27
101	SLU 42	5	1904	8488	-92.26	13.4	-0.22
101	SLU 43	8	1805	8087	-87.24	14.49	-0.25
101	SLU 44	2	1809	8310	-87.62	11.06	-0.16
101	SLU 45	8	1852	8229	-89.37	14.79	-0.26
101	SLU 46	4	1855	8363	-89.6	12.73	-0.21
101	SLU 47	2	1839	8379	-88.86	11.22	-0.17
101	SLU 48	8	1881	8298	-90.61	14.94	-0.26
101	SLU 49	5	1884	8432	-90.84	12.89	-0.21
101	SLU 50	8	1863	8225	-89.71	14.8	-0.26
101	SLU 51	4	1866	8359	-89.94	12.74	-0.21
101	SLU 52	3	1989	9098	-96.45	12.64	-0.19
101	SLU 53	9	2031	9017	-98.2	16.37	-0.29
101	SLU 54	5	2034	9151	-98.43	14.31	-0.23
101	SLU 55	3	2018	9167	-97.69	12.8	-0.2
101	SLU 56	9	2061	9086	-99.44	16.53	-0.29
101	SLU 57	5	2063	9220	-99.67	14.47	-0.24
101	SLU 58	9	2043	9012	-98.54	16.38	-0.29
101	SLU 59	5	2045	9147	-98.77	14.32	-0.23
101	SLU 60	9	2061	9212	-99.86	16.75	-0.29
101	SLU 61	6	2064	9346	-100.09	14.69	-0.24
101	SLU 62	9	2090	9281	-101.09	16.9	-0.3
101	SLU 63	6	2093	9415	-101.32	14.85	-0.24
101	SLU 64	8	1985	8830	-96	15.99	-0.28
101	SLU 65	3	1989	9053	-96.39	12.56	-0.19
101	SLU 66	9	2032	8972	-98.13	16.29	-0.28
101	SLU 67	5	2035	9106	-98.36	14.23	-0.23
101	SLU 68	3	2019	9123	-97.62	12.72	-0.19
101	SLU 69	9	2061	9041	-99.37	16.44	-0.29
101	SLU 70	5	2064	9175	-99.6	14.39	-0.23
101	SLU 71	9	2044	8968	-98.47	16.3	-0.29
101	SLU 72	5	2046	9102	-98.7	14.24	-0.23
101	SLU 73	4	2169	9841	-105.22	14.14	-0.22
101	SLU 74	10	2211	9760	-106.96	17.87	-0.31
101	SLU 75	6	2214	9894	-107.19	15.81	-0.26
101	SLU 76	4	2198	9910	-106.45	14.3	-0.22

Nodo	Cont.	Reazione a traslazione			Reazione a rotazione		
Ind.	N.br.	x	y	z	x	y	z
101	SLU 77	10	2241	9829	-108.2	18.03	-0.32
101	SLU 78	6	2243	9963	-108.43	15.97	-0.26
101	SLU 79	10	2223	9755	-107.3	17.88	-0.31
101	SLU 80	6	2225	9890	-107.53	15.83	-0.26
101	SLU 81	10	2241	9955	-108.62	18.25	-0.32
101	SLU 82	6	2244	10089	-108.85	16.19	-0.27
101	SLU 83	10	2270	10024	-109.85	18.4	-0.32
101	SLU 84	7	2273	10158	-110.08	16.35	-0.27
101	SLE RA 1	6	1487	6629	-71.92	11.97	-0.21
101	SLE RA 2	3	1490	6778	-72.18	9.69	-0.15
101	SLE RA 3	6	1519	6724	-73.34	12.17	-0.21
101	SLE RA 4	4	1521	6813	-73.5	10.8	-0.18
101	SLE RA 5	3	1510	6824	-73	9.79	-0.15
101	SLE RA 6	7	1538	6770	-74.16	12.27	-0.21
101	SLE RA 7	4	1540	6859	-74.32	10.9	-0.18
101	SLE RA 8	6	1526	6721	-73.57	12.18	-0.21
101	SLE RA 9	4	1528	6810	-73.72	10.81	-0.18
101	SLE RA 10	3	1610	7303	-78.06	10.74	-0.17
101	SLE RA 11	7	1638	7249	-79.23	13.22	-0.23
101	SLE RA 12	5	1640	7338	-79.38	11.85	-0.2
101	SLE RA 13	3	1629	7349	-78.89	10.84	-0.17
101	SLE RA 14	7	1658	7295	-80.05	13.33	-0.23
101	SLE RA 15	5	1660	7384	-80.21	11.96	-0.2
101	SLE RA 16	7	1646	7246	-79.46	13.23	-0.23
101	SLE RA 17	5	1648	7335	-79.61	11.86	-0.2
101	SLE RA 18	7	1658	7379	-80.33	13.48	-0.24
101	SLE RA 19	5	1660	7468	-80.49	12.1	-0.2
101	SLE RA 20	7	1678	7425	-81.16	13.58	-0.24
101	SLE RA 21	5	1679	7514	-81.31	12.21	-0.2
101	SLE FR 1	6	1487	6629	-71.92	11.97	-0.21
101	SLE FR 2	6	1488	6659	-71.97	11.51	-0.2
101	SLE FR 3	6	1495	6647	-72.25	12.01	-0.21
101	SLE FR 4	6	1539	6884	-74.5	11.96	-0.21
101	SLE FR 5	7	1546	6872	-74.77	12.46	-0.22
101	SLE FR 6	7	1573	7004	-76.13	12.72	-0.22
101	SLE QP 1	6	1487	6629	-71.92	11.97	-0.21
101	SLE QP 2	7	1539	6854	-74.44	12.42	-0.22
101	SLD 1	14	1925	8828	-92.81	29.71	-0.44
101	SLD 2	14	1925	8828	-92.81	29.71	-0.44
101	SLD 3	23	1573	8058	-77.69	24.96	-0.59
101	SLD 4	23	1573	8058	-77.69	24.96	-0.59
101	SLD 5	-5	2187	8613	-102.89	24.81	-0.06
101	SLD 6	-5	2187	8613	-102.89	24.81	-0.06
101	SLD 7	25	1016	6049	-52.48	8.98	-0.55
101	SLD 8	25	1016	6049	-52.48	8.98	-0.55
101	SLD 9	-12	2061	7659	-96.41	15.86	0.12
101	SLD 10	-12	2061	7659	-96.41	15.86	0.12
101	SLD 11	18	890	5095	-46	0.03	-0.38
101	SLD 12	18	890	5095	-46	0.03	-0.38
101	SLD 13	-10	1504	5649	-71.2	-0.12	0.15
101	SLD 14	-10	1504	5649	-71.2	-0.12	0.15
101	SLD 15	-1	1153	4880	-56.08	-4.86	0
101	SLD 16	-1	1153	4880	-56.08	-4.86	0
101	SLV 1	24	2443	11488	-117.47	53.21	-0.72
101	SLV 2	24	2443	11488	-117.47	53.21	-0.72
101	SLV 3	47	1622	9662	-82.1	41.49	-1.09
101	SLV 4	47	1622	9662	-82.1	41.49	-1.09
101	SLV 5	-23	3054	11014	-141	42.43	0.19
101	SLV 6	-23	3054	11014	-141	42.43	0.19
101	SLV 7	53	319	4927	-23.09	3.37	-1.04
101	SLV 8	53	319	4927	-23.09	3.37	-1.04
101	SLV 9	-40	2758	8781	-125.8	21.48	0.61
101	SLV 10	-40	2758	8781	-125.8	21.48	0.61
101	SLV 11	36	23	2694	-7.89	-17.59	-0.63
101	SLV 12	36	23	2694	-7.89	-17.59	-0.63
101	SLV 13	-34	1455	4046	-66.79	-16.65	0.66
101	SLV 14	-34	1455	4046	-66.79	-16.65	0.66
101	SLV 15	-11	635	2220	-31.42	-28.37	0.29
101	SLV 16	-11	635	2220	-31.42	-28.37	0.29
102	SLU 1	4	297	2752	-13.36	4.47	-0.01
102	SLU 2	5	510	2918	-21.34	5.04	-0.01
102	SLU 3	4	304	2806	-13.51	4.59	-0.01
102	SLU 4	5	432	2905	-18.29	4.94	-0.01
102	SLU 5	5	514	2946	-21.35	5.11	-0.01
102	SLU 6	4	308	2834	-13.51	4.67	-0.01
102	SLU 7	5	436	2933	-18.3	5.01	-0.01
102	SLU 8	4	305	2809	-13.37	4.61	-0.01
102	SLU 9	5	433	2908	-18.16	4.95	-0.01
102	SLU 10	6	534	3278	-22.43	5.72	-0.01
102	SLU 11	5	328	3167	-14.59	5.28	-0.01
102	SLU 12	5	456	3266	-19.38	5.62	-0.01
102	SLU 13	6	538	3306	-22.43	5.79	-0.01
102	SLU 14	5	331	3195	-14.59	5.35	-0.01
102	SLU 15	5	459	3294	-19.38	5.69	-0.01
102	SLU 16	5	328	3169	-14.45	5.29	-0.01
102	SLU 17	5	456	3268	-19.24	5.63	-0.01
102	SLU 18	5	331	3268	-14.91	5.44	-0.01
102	SLU 19	5	459	3367	-19.7	5.78	-0.01
102	SLU 20	5	335	3296	-14.91	5.51	-0.01
102	SLU 21	5	463	3395	-19.7	5.85	-0.01

Nodo	Cont.	Reazione a traslazione			Reazione a rotazione		
Ind.	N.br.	x	y	z	x	y	z
102	SLU 22	5	324	3080	-14.43	5.11	-0.01
102	SLU 23	6	537	3245	-22.42	5.68	-0.01
102	SLU 24	5	331	3133	-14.58	5.24	-0.01
102	SLU 25	5	459	3232	-19.37	5.58	-0.01
102	SLU 26	6	541	3273	-22.42	5.75	-0.01
102	SLU 27	5	334	3161	-14.58	5.31	-0.01
102	SLU 28	5	462	3260	-19.37	5.65	-0.01
102	SLU 29	5	331	3136	-14.44	5.25	-0.01
102	SLU 30	5	459	3235	-19.23	5.59	-0.01
102	SLU 31	6	561	3606	-23.5	6.36	-0.01
102	SLU 32	5	354	3494	-15.66	5.92	-0.01
102	SLU 33	6	482	3593	-20.45	6.26	-0.01
102	SLU 34	6	564	3634	-23.5	6.43	-0.01
102	SLU 35	5	358	3522	-15.66	5.99	-0.01
102	SLU 36	6	486	3621	-20.45	6.33	-0.01
102	SLU 37	5	355	3497	-15.52	5.93	-0.01
102	SLU 38	6	483	3596	-20.31	6.27	-0.01
102	SLU 39	5	357	3595	-15.98	6.08	-0.01
102	SLU 40	6	485	3694	-20.77	6.42	-0.01
102	SLU 41	5	361	3623	-15.99	6.15	-0.01
102	SLU 42	6	489	3722	-20.77	6.5	-0.01
102	SLU 43	5	377	3466	-17	5.59	-0.01
102	SLU 44	6	590	3631	-24.99	6.16	-0.01
102	SLU 45	5	384	3520	-17.15	5.71	-0.01
102	SLU 46	6	512	3619	-21.94	6.06	-0.01
102	SLU 47	6	594	3659	-24.99	6.23	-0.01
102	SLU 48	5	388	3548	-17.15	5.78	-0.01
102	SLU 49	6	516	3647	-21.94	6.13	-0.01
102	SLU 50	5	385	3522	-17.01	5.73	-0.01
102	SLU 51	6	513	3621	-21.8	6.07	-0.01
102	SLU 52	7	614	3992	-26.07	6.84	-0.01
102	SLU 53	6	408	3880	-18.23	6.4	-0.01
102	SLU 54	6	536	3980	-23.02	6.74	-0.01
102	SLU 55	7	618	4020	-26.07	6.91	-0.01
102	SLU 56	6	411	3909	-18.23	6.47	-0.01
102	SLU 57	6	539	4008	-23.02	6.81	-0.01
102	SLU 58	6	408	3883	-18.09	6.41	-0.01
102	SLU 59	6	536	3982	-22.88	6.75	-0.01
102	SLU 60	6	411	3981	-18.55	6.56	-0.01
102	SLU 61	6	539	4081	-23.34	6.9	-0.01
102	SLU 62	6	415	4010	-18.56	6.63	-0.01
102	SLU 63	7	543	4109	-23.34	6.97	-0.01
102	SLU 64	6	403	3793	-18.08	6.23	-0.01
102	SLU 65	7	617	3958	-26.06	6.8	-0.01
102	SLU 66	6	411	3847	-18.22	6.36	-0.01
102	SLU 67	6	539	3946	-23.01	6.7	-0.01
102	SLU 68	7	621	3986	-26.06	6.87	-0.01
102	SLU 69	6	414	3875	-18.22	6.43	-0.01
102	SLU 70	6	542	3974	-23.01	6.77	-0.01
102	SLU 71	6	411	3849	-18.08	6.37	-0.01
102	SLU 72	6	539	3948	-22.87	6.71	-0.01
102	SLU 73	7	640	4319	-27.14	7.48	-0.01
102	SLU 74	6	434	4208	-19.3	7.04	-0.01
102	SLU 75	7	562	4307	-24.09	7.38	-0.01
102	SLU 76	7	644	4347	-27.14	7.55	-0.01
102	SLU 77	6	438	4236	-19.3	7.11	-0.01
102	SLU 78	7	566	4335	-24.09	7.45	-0.01
102	SLU 79	6	435	4210	-19.17	7.05	-0.01
102	SLU 80	7	563	4309	-23.95	7.39	-0.01
102	SLU 81	6	437	4309	-19.62	7.2	-0.01
102	SLU 82	7	565	4408	-24.41	7.54	-0.01
102	SLU 83	6	441	4337	-19.63	7.27	-0.01
102	SLU 84	7	569	4436	-24.42	7.62	-0.01
102	SLE RA 1	4	305	2846	-13.67	4.65	-0.01
102	SLE RA 2	5	447	2956	-18.99	5.03	-0.01
102	SLE RA 3	4	309	2882	-13.76	4.74	-0.01
102	SLE RA 4	5	395	2948	-16.96	4.96	-0.01
102	SLE RA 5	5	449	2975	-18.99	5.08	-0.01
102	SLE RA 6	4	312	2900	-13.77	4.78	-0.01
102	SLE RA 7	5	397	2966	-16.96	5.01	-0.01
102	SLE RA 8	4	310	2883	-13.67	4.74	-0.01
102	SLE RA 9	5	395	2949	-16.87	4.97	-0.01
102	SLE RA 10	5	463	3197	-19.71	5.48	-0.01
102	SLE RA 11	5	325	3122	-14.49	5.19	-0.01
102	SLE RA 12	5	410	3188	-17.68	5.42	-0.01
102	SLE RA 13	5	465	3215	-19.71	5.53	-0.01
102	SLE RA 14	5	328	3141	-14.49	5.24	-0.01
102	SLE RA 15	5	413	3207	-17.68	5.47	-0.01
102	SLE RA 16	5	325	3124	-14.4	5.2	-0.01
102	SLE RA 17	5	411	3190	-17.59	5.43	-0.01
102	SLE RA 18	5	327	3190	-14.7	5.3	-0.01
102	SLE RA 19	5	412	3256	-17.89	5.53	-0.01
102	SLE RA 20	5	330	3208	-14.7	5.35	-0.01
102	SLE RA 21	5	415	3274	-17.9	5.57	-0.01
102	SLE FR 1	4	305	2846	-13.67	4.65	-0.01
102	SLE FR 2	4	333	2868	-14.73	4.73	-0.01
102	SLE FR 3	4	306	2853	-13.67	4.67	-0.01
102	SLE FR 4	4	340	2971	-15.04	4.92	-0.01
102	SLE FR 5	4	312	2957	-13.98	4.86	-0.01
102	SLE FR 6	4	316	3018	-14.18	4.97	-0.01

Nodo	Cont.	Reazione a traslazione			Reazione a rotazione		
Ind.	N.br.	x	y	z	x	y	z
102	SLE QP 1	4	305	2846	-13.67	4.65	-0.01
102	SLE QP 2	4	311	2949	-13.98	4.84	-0.01
102	SLD 1	4	318	2939	-14.33	8.83	-0.01
102	SLD 2	4	318	2939	-14.33	8.83	-0.01
102	SLD 3	2	-75	2646	0.59	7.43	-0.02
102	SLD 4	2	-75	2646	0.59	7.43	-0.02
102	SLD 5	7	908	3390	-36.71	8.17	-0.01
102	SLD 6	7	908	3390	-36.71	8.17	-0.01
102	SLD 7	1	-400	2414	13.02	3.49	-0.01
102	SLD 8	1	-400	2414	13.02	3.49	-0.01
102	SLD 9	8	1022	3484	-40.98	6.2	0
102	SLD 10	8	1022	3484	-40.98	6.2	0
102	SLD 11	1	-286	2508	8.75	1.51	-0.01
102	SLD 12	1	-286	2508	8.75	1.51	-0.01
102	SLD 13	6	697	3252	-28.55	2.26	0
102	SLD 14	6	697	3252	-28.55	2.26	0
102	SLD 15	4	305	2959	-13.63	0.86	0
102	SLD 16	4	305	2959	-13.63	0.86	0
102	SLV 1	4	333	2928	-15.07	14.28	-0.02
102	SLV 2	4	333	2928	-15.07	14.28	-0.02
102	SLV 3	-1	-612	2227	20.89	10.79	-0.03
102	SLV 4	-1	-612	2227	20.89	10.79	-0.03
102	SLV 5	11	1750	4006	-68.84	12.96	0
102	SLV 6	11	1750	4006	-68.84	12.96	0
102	SLV 7	-4	-1398	1669	51.02	1.34	-0.02
102	SLV 8	-4	-1398	1669	51.02	1.34	-0.02
102	SLV 9	13	2020	4229	-78.98	8.35	0.01
102	SLV 10	13	2020	4229	-78.98	8.35	0.01
102	SLV 11	-3	-1127	1892	40.89	-3.28	-0.01
102	SLV 12	-3	-1127	1892	40.89	-3.28	-0.01
102	SLV 13	9	1234	3671	-48.85	-1.11	0.02
102	SLV 14	9	1234	3671	-48.85	-1.11	0.02
102	SLV 15	4	290	2970	-12.89	-4.59	0.01
102	SLV 16	4	290	2970	-12.89	-4.59	0.01
103	SLU 1	8	230	5843	-3.94	6.6	-0.01
103	SLU 2	8	139	5837	-0.63	6.74	-0.01
103	SLU 3	8	240	5979	-4.03	6.76	-0.02
103	SLU 4	9	185	5975	-2.04	6.85	-0.02
103	SLU 5	8	144	5927	-0.64	6.83	-0.02
103	SLU 6	9	245	6068	-4.04	6.86	-0.02
103	SLU 7	9	191	6065	-2.05	6.94	-0.02
103	SLU 8	8	241	6022	-3.97	6.78	-0.02
103	SLU 9	9	187	6019	-1.98	6.87	-0.02
103	SLU 10	9	186	6633	-1.42	6.79	-0.02
103	SLU 11	9	287	6775	-4.81	6.82	-0.02
103	SLU 12	9	233	6772	-2.82	6.9	-0.02
103	SLU 13	9	192	6723	-1.43	6.89	-0.02
103	SLU 14	9	293	6864	-4.82	6.91	-0.02
103	SLU 15	9	238	6861	-2.84	7	-0.02
103	SLU 16	9	289	6818	-4.76	6.83	-0.02
103	SLU 17	9	234	6815	-2.77	6.92	-0.02
103	SLU 18	9	298	6980	-5.07	6.67	-0.02
103	SLU 19	9	243	6977	-3.08	6.76	-0.02
103	SLU 20	9	304	7070	-5.08	6.76	-0.02
103	SLU 21	9	249	7066	-3.09	6.85	-0.02
103	SLU 22	9	265	6474	-4.34	7.29	-0.02
103	SLU 23	9	174	6469	-1.02	7.43	-0.02
103	SLU 24	9	275	6610	-4.42	7.46	-0.02
103	SLU 25	9	220	6607	-2.43	7.54	-0.02
103	SLU 26	9	180	6559	-1.04	7.53	-0.02
103	SLU 27	10	281	6700	-4.43	7.55	-0.02
103	SLU 28	10	226	6697	-2.44	7.64	-0.02
103	SLU 29	9	277	6654	-4.36	7.47	-0.02
103	SLU 30	10	222	6651	-2.37	7.56	-0.02
103	SLU 31	10	222	7265	-1.81	7.49	-0.02
103	SLU 32	10	323	7406	-5.2	7.51	-0.02
103	SLU 33	10	268	7403	-3.22	7.6	-0.02
103	SLU 34	10	228	7355	-1.82	7.58	-0.02
103	SLU 35	10	328	7496	-5.22	7.6	-0.02
103	SLU 36	10	274	7493	-3.23	7.69	-0.02
103	SLU 37	10	324	7450	-5.15	7.53	-0.02
103	SLU 38	10	270	7447	-3.16	7.61	-0.02
103	SLU 39	10	333	7611	-5.46	7.37	-0.02
103	SLU 40	10	279	7608	-3.47	7.45	-0.02
103	SLU 41	10	339	7701	-5.47	7.46	-0.02
103	SLU 42	10	284	7698	-3.48	7.54	-0.02
103	SLU 43	10	286	7379	-4.99	8.34	-0.02
103	SLU 44	10	195	7374	-1.68	8.48	-0.02
103	SLU 45	11	296	7515	-5.07	8.5	-0.02
103	SLU 46	11	242	7512	-3.09	8.59	-0.02
103	SLU 47	11	201	7463	-1.69	8.57	-0.02
103	SLU 48	11	302	7605	-5.09	8.6	-0.02
103	SLU 49	11	247	7602	-3.1	8.68	-0.02
103	SLU 50	11	298	7558	-5.02	8.52	-0.02
103	SLU 51	11	243	7555	-3.03	8.61	-0.02
103	SLU 52	11	243	8170	-2.46	8.54	-0.02
103	SLU 53	11	344	8311	-5.86	8.56	-0.02
103	SLU 54	11	289	8308	-3.87	8.64	-0.02
103	SLU 55	11	249	8259	-2.48	8.63	-0.02
103	SLU 56	11	350	8401	-5.87	8.65	-0.02

Nodo	Cont.	Reazione a traslazione			Reazione a rotazione		
Ind.	N.br.	x	y	z	x	y	z
103	SLU 57	11	295	8398	-3.88	8.74	-0.02
103	SLU 58	11	346	8354	-5.8	8.58	-0.02
103	SLU 59	11	291	8351	-3.82	8.66	-0.02
103	SLU 60	11	355	8516	-6.12	8.41	-0.02
103	SLU 61	11	300	8513	-4.13	8.5	-0.02
103	SLU 62	11	360	8606	-6.13	8.51	-0.02
103	SLU 63	11	306	8603	-4.14	8.59	-0.02
103	SLU 64	11	322	8010	-5.39	9.03	-0.02
103	SLU 65	11	231	8005	-2.07	9.18	-0.02
103	SLU 66	12	332	8146	-5.47	9.2	-0.02
103	SLU 67	12	277	8143	-3.48	9.28	-0.02
103	SLU 68	12	237	8095	-2.08	9.27	-0.02
103	SLU 69	12	337	8236	-5.48	9.29	-0.02
103	SLU 70	12	283	8233	-3.49	9.38	-0.02
103	SLU 71	12	333	8190	-5.41	9.22	-0.02
103	SLU 72	12	279	8187	-3.42	9.3	-0.02
103	SLU 73	12	279	8801	-2.86	9.23	-0.02
103	SLU 74	12	379	8942	-6.25	9.25	-0.02
103	SLU 75	12	325	8939	-4.26	9.34	-0.02
103	SLU 76	12	284	8891	-2.87	9.32	-0.02
103	SLU 77	12	385	9032	-6.27	9.34	-0.02
103	SLU 78	12	331	9029	-4.28	9.43	-0.02
103	SLU 79	12	381	8986	-6.2	9.27	-0.02
103	SLU 80	12	326	8983	-4.21	9.36	-0.02
103	SLU 81	12	390	9148	-6.51	9.11	-0.02
103	SLU 82	12	335	9144	-4.52	9.19	-0.02
103	SLU 83	12	396	9237	-6.52	9.2	-0.02
103	SLU 84	12	341	9234	-4.53	9.29	-0.02
103	SLE RA 1	9	240	6023	-4.06	6.79	-0.02
103	SLE RA 2	9	179	6020	-1.85	6.89	-0.02
103	SLE RA 3	9	246	6114	-4.11	6.91	-0.02
103	SLE RA 4	9	210	6112	-2.79	6.96	-0.02
103	SLE RA 5	9	183	6079	-1.86	6.95	-0.02
103	SLE RA 6	9	250	6174	-4.12	6.97	-0.02
103	SLE RA 7	9	214	6171	-2.79	7.02	-0.02
103	SLE RA 8	9	247	6143	-4.07	6.92	-0.02
103	SLE RA 9	9	211	6141	-2.75	6.98	-0.02
103	SLE RA 10	9	211	6550	-2.37	6.93	-0.02
103	SLE RA 11	9	278	6644	-4.63	6.94	-0.02
103	SLE RA 12	9	242	6642	-3.31	7	-0.02
103	SLE RA 13	9	215	6610	-2.38	6.99	-0.02
103	SLE RA 14	9	282	6704	-4.64	7	-0.02
103	SLE RA 15	9	246	6702	-3.32	7.06	-0.02
103	SLE RA 16	9	279	6673	-4.6	6.95	-0.02
103	SLE RA 17	9	243	6671	-3.27	7.01	-0.02
103	SLE RA 18	9	285	6781	-4.8	6.84	-0.02
103	SLE RA 19	9	249	6779	-3.48	6.9	-0.02
103	SLE RA 20	9	289	6841	-4.81	6.91	-0.02
103	SLE RA 21	9	253	6839	-3.49	6.96	-0.02
103	SLE FR 1	9	240	6023	-4.06	6.79	-0.02
103	SLE FR 2	9	228	6022	-3.61	6.81	-0.02
103	SLE FR 3	9	241	6047	-4.06	6.82	-0.02
103	SLE FR 4	9	241	6250	-3.84	6.83	-0.02
103	SLE FR 5	9	255	6274	-4.28	6.83	-0.02
103	SLE FR 6	9	262	6402	-4.43	6.82	-0.02
103	SLE QP 1	9	240	6023	-4.06	6.79	-0.02
103	SLE QP 2	9	253	6250	-4.28	6.81	-0.02
103	SLD 1	28	607	6570	-16.77	26.33	-0.06
103	SLD 2	28	607	6570	-16.77	26.33	-0.06
103	SLD 3	25	202	6357	-2.27	23.42	-0.05
103	SLD 4	25	202	6357	-2.27	23.42	-0.05
103	SLD 5	19	974	6670	-30.01	17.08	-0.04
103	SLD 6	19	974	6670	-30.01	17.08	-0.04
103	SLD 7	9	-376	5959	18.3	7.38	-0.02
103	SLD 8	9	-376	5959	18.3	7.38	-0.02
103	SLD 9	9	883	6542	-26.86	6.24	-0.01
103	SLD 10	9	883	6542	-26.86	6.24	-0.01
103	SLD 11	-2	-467	5831	21.44	-3.46	0.01
103	SLD 12	-2	-467	5831	21.44	-3.46	0.01
103	SLD 13	-7	305	6144	-6.29	-9.8	0.02
103	SLD 14	-7	305	6144	-6.29	-9.8	0.02
103	SLD 15	-10	-100	5931	8.2	-12.71	0.03
103	SLD 16	-10	-100	5931	8.2	-12.71	0.03
103	SLV 1	53	1083	7001	-33.61	52.51	-0.12
103	SLV 2	53	1083	7001	-33.61	52.51	-0.12
103	SLV 3	46	132	6499	0.43	45.7	-0.1
103	SLV 4	46	132	6499	0.43	45.7	-0.1
103	SLV 5	33	1944	7235	-64.7	30.85	-0.07
103	SLV 6	33	1944	7235	-64.7	30.85	-0.07
103	SLV 7	9	-1225	5565	48.75	8.14	-0.02
103	SLV 8	9	-1225	5565	48.75	8.14	-0.02
103	SLV 9	8	1732	6936	-57.32	5.48	-0.01
103	SLV 10	8	1732	6936	-57.32	5.48	-0.01
103	SLV 11	-15	-1438	5266	56.14	-17.23	0.04
103	SLV 12	-15	-1438	5266	56.14	-17.23	0.04
103	SLV 13	-28	375	6001	-8.99	-32.08	0.07
103	SLV 14	-28	375	6001	-8.99	-32.08	0.07
103	SLV 15	-35	-576	5500	25.04	-38.89	0.09
103	SLV 16	-35	-576	5500	25.04	-38.89	0.09
104	SLU 1	-2	650	3509	-23.33	-0.55	0

Nodo	Cont.	Reazione a traslazione			Reazione a rotazione		
Ind.	N.br.	x	y	z	x	y	z
104	SLU 2	-2	863	3670	-32.79	-1.1	0
104	SLU 3	-2	675	3584	-24.58	-0.57	0
104	SLU 4	-2	803	3681	-30.25	-0.9	0
104	SLU 5	-2	881	3710	-33.75	-1.11	0
104	SLU 6	-2	694	3624	-25.54	-0.58	0
104	SLU 7	-2	822	3720	-31.22	-0.91	0
104	SLU 8	-2	686	3589	-25.26	-0.57	0
104	SLU 9	-2	814	3685	-30.93	-0.9	0
104	SLU 10	-3	954	4160	-36.44	-1.17	0
104	SLU 11	-2	767	4074	-28.23	-0.64	0
104	SLU 12	-2	895	4171	-33.9	-0.97	0
104	SLU 13	-3	972	4200	-37.4	-1.19	0
104	SLU 14	-2	785	4114	-29.19	-0.65	0
104	SLU 15	-2	913	4210	-34.87	-0.98	0
104	SLU 16	-2	777	4078	-28.91	-0.64	0
104	SLU 17	-2	905	4175	-34.58	-0.98	0
104	SLU 18	-2	780	4209	-28.54	-0.65	0
104	SLU 19	-2	908	4305	-34.22	-0.98	0
104	SLU 20	-2	798	4249	-29.51	-0.66	0
104	SLU 21	-2	926	4345	-35.18	-1	0
104	SLU 22	-2	742	3955	-27.15	-0.61	0
104	SLU 23	-3	955	4115	-36.61	-1.17	0
104	SLU 24	-2	768	4030	-28.4	-0.63	0
104	SLU 25	-2	896	4126	-34.07	-0.96	0
104	SLU 26	-3	974	4155	-37.57	-1.18	0
104	SLU 27	-2	786	4069	-29.36	-0.64	0
104	SLU 28	-2	914	4166	-35.04	-0.98	0
104	SLU 29	-2	779	4034	-29.08	-0.64	0
104	SLU 30	-2	907	4130	-34.75	-0.97	0
104	SLU 31	-3	1047	4605	-40.26	-1.24	0
104	SLU 32	-2	859	4519	-32.05	-0.71	0
104	SLU 33	-2	987	4616	-37.72	-1.04	0
104	SLU 34	-3	1065	4645	-41.22	-1.25	0
104	SLU 35	-2	878	4559	-33.01	-0.72	0
104	SLU 36	-3	1006	4656	-38.69	-1.05	0
104	SLU 37	-2	870	4524	-32.73	-0.71	0
104	SLU 38	-2	998	4620	-38.4	-1.04	0
104	SLU 39	-2	872	4654	-32.36	-0.72	0
104	SLU 40	-3	1000	4751	-38.04	-1.05	0
104	SLU 41	-2	891	4694	-33.33	-0.73	0
104	SLU 42	-3	1019	4791	-39	-1.06	0
104	SLU 43	-2	813	4409	-29.02	-0.69	0
104	SLU 44	-3	1026	4570	-38.47	-1.24	0
104	SLU 45	-2	839	4484	-30.26	-0.71	0
104	SLU 46	-2	967	4581	-35.94	-1.04	0
104	SLU 47	-3	1044	4610	-39.44	-1.25	0
104	SLU 48	-2	857	4524	-31.23	-0.72	0
104	SLU 49	-3	985	4620	-36.9	-1.05	0
104	SLU 50	-2	849	4489	-30.94	-0.71	0
104	SLU 51	-2	977	4585	-36.62	-1.04	0
104	SLU 52	-3	1117	5060	-42.12	-1.32	0
104	SLU 53	-2	930	4974	-33.91	-0.78	0
104	SLU 54	-3	1058	5071	-39.59	-1.11	0
104	SLU 55	-3	1135	5100	-43.09	-1.33	0
104	SLU 56	-2	948	5014	-34.88	-0.79	0
104	SLU 57	-3	1076	5110	-40.55	-1.12	0
104	SLU 58	-2	940	4978	-34.59	-0.79	0
104	SLU 59	-3	1068	5075	-40.27	-1.12	0
104	SLU 60	-2	943	5109	-34.23	-0.79	0
104	SLU 61	-3	1071	5206	-39.9	-1.12	0
104	SLU 62	-2	961	5149	-35.19	-0.8	0
104	SLU 63	-3	1089	5245	-40.87	-1.14	0
104	SLU 64	-2	905	4855	-32.84	-0.76	0
104	SLU 65	-3	1118	5015	-42.3	-1.31	0
104	SLU 66	-2	931	4930	-34.09	-0.77	0
104	SLU 67	-3	1059	5026	-39.76	-1.11	0
104	SLU 68	-3	1137	5055	-43.26	-1.32	0
104	SLU 69	-2	950	4969	-35.05	-0.79	0
104	SLU 70	-3	1077	5066	-40.73	-1.12	0
104	SLU 71	-2	942	4934	-34.77	-0.78	0
104	SLU 72	-3	1070	5030	-40.44	-1.11	0
104	SLU 73	-3	1210	5505	-45.95	-1.38	0
104	SLU 74	-2	1022	5419	-37.74	-0.85	0
104	SLU 75	-3	1150	5516	-43.41	-1.18	0
104	SLU 76	-3	1228	5545	-46.91	-1.39	0
104	SLU 77	-2	1041	5459	-38.7	-0.86	0
104	SLU 78	-3	1169	5556	-44.38	-1.19	0
104	SLU 79	-2	1033	5424	-38.42	-0.85	0
104	SLU 80	-3	1161	5520	-44.09	-1.18	0
104	SLU 81	-2	1035	5554	-38.05	-0.86	0
104	SLU 82	-3	1163	5651	-43.73	-1.19	0
104	SLU 83	-2	1054	5594	-39.02	-0.87	0
104	SLU 84	-3	1182	5691	-44.69	-1.2	0
104	SLE RA 1	-2	676	3636	-24.42	-0.57	0
104	SLE RA 2	-2	818	3744	-30.73	-0.94	0
104	SLE RA 3	-2	693	3686	-25.25	-0.58	0
104	SLE RA 4	-2	779	3751	-29.03	-0.8	0
104	SLE RA 5	-2	830	3770	-31.37	-0.94	0
104	SLE RA 6	-2	706	3713	-25.89	-0.59	0
104	SLE RA 7	-2	791	3777	-29.68	-0.81	0

Nodo	Cont.	Reazione a traslazione			Reazione a rotazione		
Ind.	N.br.	x	y	z	x	y	z
104	SLE RA 8	-2	700	3689	-25.71	-0.58	0
104	SLE RA 9	-2	786	3754	-29.49	-0.8	0
104	SLE RA 10	-2	879	4070	-33.16	-0.98	0
104	SLE RA 11	-2	754	4013	-27.69	-0.63	0
104	SLE RA 12	-2	839	4077	-31.47	-0.85	0
104	SLE RA 13	-2	891	4097	-33.8	-0.99	0
104	SLE RA 14	-2	766	4039	-28.33	-0.64	0
104	SLE RA 15	-2	852	4104	-32.11	-0.86	0
104	SLE RA 16	-2	761	4016	-28.14	-0.63	0
104	SLE RA 17	-2	847	4080	-31.92	-0.85	0
104	SLE RA 18	-2	763	4103	-27.9	-0.64	0
104	SLE RA 19	-2	848	4167	-31.68	-0.86	0
104	SLE RA 20	-2	775	4129	-28.54	-0.64	0
104	SLE RA 21	-2	860	4194	-32.32	-0.87	0
104	SLE FR 1	-2	676	3636	-24.42	-0.57	0
104	SLE FR 2	-2	704	3658	-25.68	-0.64	0
104	SLE FR 3	-2	681	3647	-24.68	-0.57	0
104	SLE FR 4	-2	730	3798	-26.72	-0.66	0
104	SLE FR 5	-2	707	3787	-25.72	-0.59	0
104	SLE FR 6	-2	719	3870	-26.16	-0.6	0
104	SLE QP 1	-2	676	3636	-24.42	-0.57	0
104	SLE QP 2	-2	702	3776	-25.46	-0.59	0
104	SLD 1	-4	1051	4064	-40.26	1.23	-0.01
104	SLD 2	-4	1051	4064	-40.26	1.23	-0.01
104	SLD 3	-3	654	3702	-23.65	2.22	-0.01
104	SLD 4	-3	654	3702	-23.65	2.22	-0.01
104	SLD 5	-5	1409	4413	-55.09	-1.54	-0.01
104	SLD 6	-5	1409	4413	-55.09	-1.54	-0.01
104	SLD 7	1	86	3204	0.27	1.75	0
104	SLD 8	1	86	3204	0.27	1.75	0
104	SLD 9	-4	1318	4349	-51.19	-2.93	0
104	SLD 10	-4	1318	4349	-51.19	-2.93	0
104	SLD 11	2	-5	3140	4.17	0.36	0
104	SLD 12	2	-5	3140	4.17	0.36	0
104	SLD 13	-1	750	3851	-27.27	-3.39	0
104	SLD 14	-1	750	3851	-27.27	-3.39	0
104	SLD 15	1	353	3488	-10.66	-2.4	0.01
104	SLD 16	1	353	3488	-10.66	-2.4	0.01
104	SLV 1	-8	1536	4461	-60.86	3.66	-0.02
104	SLV 2	-8	1536	4461	-60.86	3.66	-0.02
104	SLV 3	-4	586	3598	-21.11	6.14	-0.02
104	SLV 4	-4	586	3598	-21.11	6.14	-0.02
104	SLV 5	-10	2394	5290	-96.37	-3.07	-0.01
104	SLV 6	-10	2394	5290	-96.37	-3.07	-0.01
104	SLV 7	4	-775	2415	36.13	5.18	0
104	SLV 8	4	-775	2415	36.13	5.18	0
104	SLV 9	-7	2179	5138	-87.06	-6.36	0
104	SLV 10	-7	2179	5138	-87.06	-6.36	0
104	SLV 11	7	-990	2263	45.44	1.89	0.01
104	SLV 12	7	-990	2263	45.44	1.89	0.01
104	SLV 13	0	818	3954	-29.82	-7.31	0.01
104	SLV 14	0	818	3954	-29.82	-7.31	0.01
104	SLV 15	5	-132	3092	9.93	-4.84	0.02
104	SLV 16	5	-132	3092	9.93	-4.84	0.02
105	SLU 1	4	1491	6117	-90.78	1.4	0
105	SLU 2	9	1511	6335	-92.11	4.93	0.01
105	SLU 3	4	1534	6271	-93.31	1.44	0
105	SLU 4	7	1545	6402	-94.11	3.56	0.01
105	SLU 5	9	1533	6422	-93.42	4.95	0.01
105	SLU 6	4	1556	6358	-94.62	1.45	0.01
105	SLU 7	7	1568	6489	-95.42	3.57	0.01
105	SLU 8	4	1536	6290	-93.4	1.43	0
105	SLU 9	7	1548	6421	-94.2	3.55	0.01
105	SLU 10	10	1711	7107	-104.64	5.11	0.01
105	SLU 11	4	1734	7043	-105.84	1.61	0.01
105	SLU 12	8	1746	7174	-106.64	3.73	0.01
105	SLU 13	10	1734	7194	-105.95	5.12	0.01
105	SLU 14	4	1757	7130	-107.15	1.63	0.01
105	SLU 15	8	1768	7261	-107.95	3.75	0.01
105	SLU 16	4	1736	7062	-105.93	1.6	0.01
105	SLU 17	8	1748	7193	-106.73	3.72	0.01
105	SLU 18	4	1778	7219	-108.68	1.65	0.01
105	SLU 19	8	1790	7350	-109.48	3.77	0.01
105	SLU 20	4	1800	7306	-109.99	1.66	0.01
105	SLU 21	8	1812	7437	-110.79	3.78	0.01
105	SLU 22	4	1685	6844	-102.77	1.58	0.01
105	SLU 23	10	1705	7062	-104.11	5.11	0.01
105	SLU 24	4	1728	6999	-105.3	1.62	0.01
105	SLU 25	8	1740	7130	-106.1	3.74	0.01
105	SLU 26	10	1727	7149	-105.42	5.13	0.01
105	SLU 27	4	1750	7086	-106.61	1.64	0.01
105	SLU 28	8	1762	7217	-107.41	3.76	0.01
105	SLU 29	4	1730	7017	-105.39	1.61	0.01
105	SLU 30	8	1742	7148	-106.19	3.73	0.01
105	SLU 31	10	1905	7834	-116.63	5.29	0.01
105	SLU 32	5	1928	7771	-117.83	1.8	0.01
105	SLU 33	8	1940	7902	-118.63	3.92	0.01
105	SLU 34	10	1928	7921	-117.94	5.31	0.01
105	SLU 35	5	1951	7857	-119.14	1.81	0.01
105	SLU 36	8	1962	7988	-119.94	3.93	0.01

Nodo	Cont.	Reazione a traslazione			Reazione a rotazione		
Ind.	N.br.	x	y	z	x	y	z
105	SLU 37	5	1931	7789	-117.92	1.79	0.01
105	SLU 38	8	1942	7920	-118.72	3.91	0.01
105	SLU 39	5	1972	7947	-120.67	1.83	0.01
105	SLU 40	8	1984	8078	-121.47	3.95	0.01
105	SLU 41	5	1994	8033	-121.98	1.85	0.01
105	SLU 42	8	2006	8164	-122.78	3.97	0.01
105	SLU 43	5	1872	7702	-113.9	1.75	0.01
105	SLU 44	10	1892	7921	-115.24	5.29	0.01
105	SLU 45	5	1915	7857	-116.43	1.79	0.01
105	SLU 46	8	1926	7988	-117.23	3.91	0.01
105	SLU 47	10	1914	8007	-116.55	5.3	0.01
105	SLU 48	5	1937	7944	-117.74	1.81	0.01
105	SLU 49	8	1949	8075	-118.54	3.93	0.01
105	SLU 50	5	1917	7876	-116.52	1.78	0.01
105	SLU 51	8	1929	8007	-117.32	3.9	0.01
105	SLU 52	11	2092	8692	-127.76	5.46	0.01
105	SLU 53	5	2115	8629	-128.96	1.97	0.01
105	SLU 54	8	2127	8760	-129.76	4.09	0.01
105	SLU 55	11	2115	8779	-129.07	5.48	0.01
105	SLU 56	5	2137	8716	-130.27	1.98	0.01
105	SLU 57	9	2149	8847	-131.07	4.11	0.01
105	SLU 58	5	2117	8648	-129.05	1.96	0.01
105	SLU 59	8	2129	8779	-129.85	4.08	0.01
105	SLU 60	5	2159	8805	-131.8	2	0.01
105	SLU 61	9	2170	8936	-132.6	4.12	0.01
105	SLU 62	5	2181	8892	-133.11	2.02	0.01
105	SLU 63	9	2193	9023	-133.91	4.14	0.01
105	SLU 64	5	2066	8429	-125.89	1.94	0.01
105	SLU 65	11	2086	8648	-127.23	5.47	0.01
105	SLU 66	5	2109	8584	-128.42	1.98	0.01
105	SLU 67	8	2120	8715	-129.23	4.1	0.01
105	SLU 68	11	2108	8735	-128.54	5.49	0.01
105	SLU 69	5	2131	8671	-129.74	1.99	0.01
105	SLU 70	9	2143	8802	-130.54	4.11	0.01
105	SLU 71	5	2111	8603	-128.52	1.97	0.01
105	SLU 72	8	2123	8734	-129.32	4.09	0.01
105	SLU 73	11	2286	9420	-139.75	5.65	0.01
105	SLU 74	5	2309	9356	-140.95	2.15	0.01
105	SLU 75	9	2321	9487	-141.75	4.27	0.01
105	SLU 76	11	2309	9506	-141.07	5.66	0.01
105	SLU 77	6	2332	9443	-142.26	2.17	0.01
105	SLU 78	9	2343	9574	-143.06	4.29	0.01
105	SLU 79	5	2311	9375	-141.04	2.14	0.01
105	SLU 80	9	2323	9506	-141.84	4.26	0.01
105	SLU 81	6	2353	9532	-143.79	2.19	0.01
105	SLU 82	9	2364	9663	-144.59	4.31	0.01
105	SLU 83	6	2375	9619	-145.1	2.2	0.01
105	SLU 84	9	2387	9750	-145.9	4.32	0.01
105	SLE RA 1	4	1547	6324	-94.21	1.45	0
105	SLE RA 2	8	1560	6470	-95.09	3.81	0.01
105	SLE RA 3	4	1575	6428	-95.89	1.48	0.01
105	SLE RA 4	6	1583	6515	-96.43	2.89	0.01
105	SLE RA 5	8	1575	6528	-95.97	3.82	0.01
105	SLE RA 6	4	1590	6485	-96.77	1.49	0.01
105	SLE RA 7	6	1598	6573	-97.3	2.9	0.01
105	SLE RA 8	4	1576	6440	-95.95	1.47	0.01
105	SLE RA 9	6	1584	6527	-96.49	2.88	0.01
105	SLE RA 10	8	1693	6984	-103.45	3.92	0.01
105	SLE RA 11	4	1709	6942	-104.24	1.59	0.01
105	SLE RA 12	6	1717	7030	-104.78	3.01	0.01
105	SLE RA 13	8	1708	7042	-104.32	3.93	0.01
105	SLE RA 14	4	1724	7000	-105.12	1.6	0.01
105	SLE RA 15	6	1731	7087	-105.65	3.02	0.01
105	SLE RA 16	4	1710	6955	-104.31	1.59	0.01
105	SLE RA 17	6	1718	7042	-104.84	3	0.01
105	SLE RA 18	4	1738	7059	-106.14	1.62	0.01
105	SLE RA 19	6	1746	7147	-106.67	3.03	0.01
105	SLE RA 20	4	1753	7117	-107.01	1.63	0.01
105	SLE RA 21	6	1760	7205	-107.54	3.04	0.01
105	SLE FR 1	4	1547	6324	-94.21	1.45	0
105	SLE FR 2	4	1549	6353	-94.38	1.92	0.01
105	SLE FR 3	4	1553	6347	-94.56	1.45	0
105	SLE FR 4	5	1607	6574	-97.96	1.97	0.01
105	SLE FR 5	4	1610	6568	-98.13	1.5	0.01
105	SLE FR 6	4	1642	6692	-100.17	1.53	0.01
105	SLE QP 1	4	1547	6324	-94.21	1.45	0
105	SLE QP 2	4	1604	6545	-97.78	1.5	0.01
105	SLD 1	16	1503	5332	-89.43	12.83	0
105	SLD 2	16	1503	5332	-89.43	12.83	0
105	SLD 3	7	1138	4540	-69.21	8.23	-0.01
105	SLD 4	7	1138	4540	-69.21	8.23	-0.01
105	SLD 5	21	2127	7383	-125.95	11.88	0.01
105	SLD 6	21	2127	7383	-125.95	11.88	0.01
105	SLD 7	-9	911	4742	-58.54	-3.46	-0.01
105	SLD 8	-9	911	4742	-58.54	-3.46	-0.01
105	SLD 9	17	2297	8348	-137.03	6.46	0.02
105	SLD 10	17	2297	8348	-137.03	6.46	0.02
105	SLD 11	-14	1081	5707	-69.62	-8.88	0
105	SLD 12	-14	1081	5707	-69.62	-8.88	0
105	SLD 13	1	2070	8550	-126.36	-5.23	0.02

Nodo	Cont.	Reazione a traslazione			Reazione a rotazione		
Ind.	N.br.	x	y	z	x	y	z
105	SLD 14	1	2070	8550	-126.36	-5.23	0.02
105	SLD 15	-8	1705	7758	-106.14	-9.84	0.01
105	SLD 16	-8	1705	7758	-106.14	-9.84	0.01
105	SLV 1	34	1365	3715	-78.12	28.92	-0.02
105	SLV 2	34	1365	3715	-78.12	28.92	-0.02
105	SLV 3	11	514	1843	-30.86	17.5	-0.03
105	SLV 4	11	514	1843	-30.86	17.5	-0.03
105	SLV 5	47	2823	8536	-163.56	27.05	0.02
105	SLV 6	47	2823	8536	-163.56	27.05	0.02
105	SLV 7	-28	-14	2295	-6.03	-11.03	-0.03
105	SLV 8	-28	-14	2295	-6.03	-11.03	-0.03
105	SLV 9	36	3222	10795	-189.54	14.03	0.04
105	SLV 10	36	3222	10795	-189.54	14.03	0.04
105	SLV 11	-40	385	4554	-32.01	-24.06	-0.01
105	SLV 12	-40	385	4554	-32.01	-24.06	-0.01
105	SLV 13	-3	2694	11247	-164.71	-14.5	0.04
105	SLV 14	-3	2694	11247	-164.71	-14.5	0.04
105	SLV 15	-26	1843	9375	-117.45	-25.92	0.03
105	SLV 16	-26	1843	9375	-117.45	-25.92	0.03
106	SLU 1	1	-108	447	4.33	0.5	-0.02
106	SLU 2	1	-110	445	4.4	0.52	-0.02
106	SLU 3	1	-112	443	4.51	0.51	-0.02
106	SLU 4	1	-113	442	4.55	0.52	-0.03
106	SLU 5	1	-113	442	4.52	0.52	-0.03
106	SLU 6	1	-115	440	4.64	0.51	-0.03
106	SLU 7	1	-116	439	4.68	0.53	-0.03
106	SLU 8	1	-114	441	4.58	0.5	-0.02
106	SLU 9	1	-115	440	4.62	0.52	-0.03
106	SLU 10	1	-154	547	5.9	0.19	-0.03
106	SLU 11	1	-156	544	6.02	0.17	-0.03
106	SLU 12	1	-157	543	6.06	0.19	-0.03
106	SLU 13	1	-157	544	6.03	0.19	-0.03
106	SLU 14	1	-159	541	6.15	0.18	-0.03
106	SLU 15	1	-160	541	6.19	0.19	-0.03
106	SLU 16	1	-158	543	6.09	0.17	-0.03
106	SLU 17	1	-159	542	6.13	0.18	-0.03
106	SLU 18	1	-171	592	6.48	0.02	-0.04
106	SLU 19	1	-172	591	6.52	0.03	-0.04
106	SLU 20	1	-174	589	6.61	0.02	-0.04
106	SLU 21	1	-175	588	6.65	0.04	-0.04
106	SLU 22	1	-133	461	5.29	0.47	-0.03
106	SLU 23	1	-135	459	5.36	0.5	-0.03
106	SLU 24	1	-137	457	5.48	0.48	-0.03
106	SLU 25	1	-138	456	5.52	0.5	-0.03
106	SLU 26	1	-137	457	5.49	0.5	-0.03
106	SLU 27	1	-140	454	5.61	0.49	-0.03
106	SLU 28	1	-141	453	5.65	0.5	-0.03
106	SLU 29	1	-139	455	5.55	0.48	-0.03
106	SLU 30	1	-140	454	5.59	0.49	-0.03
106	SLU 31	1	-178	561	6.87	0.16	-0.04
106	SLU 32	1	-181	558	6.99	0.15	-0.04
106	SLU 33	1	-182	558	7.03	0.16	-0.04
106	SLU 34	1	-181	558	7	0.16	-0.04
106	SLU 35	1	-184	555	7.11	0.15	-0.04
106	SLU 36	1	-185	555	7.15	0.17	-0.04
106	SLU 37	1	-183	557	7.06	0.14	-0.04
106	SLU 38	1	-184	556	7.1	0.16	-0.04
106	SLU 39	1	-196	606	7.45	-0.01	-0.04
106	SLU 40	1	-197	605	7.49	0.01	-0.04
106	SLU 41	1	-199	603	7.57	0	-0.04
106	SLU 42	1	-200	602	7.62	0.01	-0.04
106	SLU 43	1	-132	576	5.29	0.65	-0.03
106	SLU 44	1	-134	575	5.36	0.68	-0.03
106	SLU 45	1	-136	572	5.48	0.66	-0.03
106	SLU 46	1	-137	571	5.52	0.68	-0.03
106	SLU 47	1	-137	572	5.49	0.68	-0.03
106	SLU 48	1	-139	569	5.61	0.67	-0.03
106	SLU 49	1	-140	568	5.65	0.68	-0.03
106	SLU 50	1	-138	570	5.55	0.66	-0.03
106	SLU 51	1	-139	569	5.59	0.68	-0.03
106	SLU 52	1	-178	676	6.87	0.34	-0.04
106	SLU 53	1	-180	674	6.99	0.33	-0.04
106	SLU 54	1	-181	673	7.03	0.34	-0.04
106	SLU 55	1	-181	673	7	0.35	-0.04
106	SLU 56	1	-183	671	7.11	0.33	-0.04
106	SLU 57	1	-184	670	7.15	0.35	-0.04
106	SLU 58	1	-182	672	7.06	0.33	-0.04
106	SLU 59	1	-183	671	7.1	0.34	-0.04
106	SLU 60	1	-195	721	7.45	0.18	-0.04
106	SLU 61	1	-196	721	7.49	0.19	-0.04
106	SLU 62	1	-198	718	7.57	0.18	-0.04
106	SLU 63	1	-199	718	7.62	0.19	-0.04
106	SLU 64	1	-157	590	6.26	0.63	-0.03
106	SLU 65	1	-158	589	6.33	0.65	-0.03
106	SLU 66	1	-161	586	6.44	0.64	-0.03
106	SLU 67	1	-162	585	6.49	0.65	-0.04
106	SLU 68	1	-161	586	6.46	0.66	-0.04
106	SLU 69	1	-164	583	6.57	0.64	-0.03
106	SLU 70	1	-165	582	6.61	0.66	-0.04
106	SLU 71	1	-163	584	6.51	0.64	-0.03

Nodo	Cont.	Reazione a traslazione			Reazione a rotazione		
Ind.	N.br.	x	y	z	x	y	z
106	SLU 72	1	-164	583	6.56	0.65	-0.04
106	SLU 73	1	-202	690	7.84	0.32	-0.04
106	SLU 74	1	-205	688	7.95	0.31	-0.04
106	SLU 75	1	-206	687	7.99	0.32	-0.04
106	SLU 76	1	-205	687	7.96	0.32	-0.04
106	SLU 77	1	-208	685	8.08	0.31	-0.04
106	SLU 78	1	-209	684	8.12	0.32	-0.04
106	SLU 79	1	-207	686	8.02	0.3	-0.04
106	SLU 80	1	-208	685	8.06	0.32	-0.04
106	SLU 81	1	-220	735	8.41	0.15	-0.05
106	SLU 82	1	-221	735	8.46	0.17	-0.05
106	SLU 83	1	-223	733	8.54	0.15	-0.05
106	SLU 84	1	-224	732	8.58	0.17	-0.05
106	SLE RA 1	1	-115	451	4.6	0.49	-0.03
106	SLE RA 2	1	-116	450	4.65	0.51	-0.03
106	SLE RA 3	1	-118	448	4.73	0.5	-0.03
106	SLE RA 4	1	-119	447	4.75	0.51	-0.03
106	SLE RA 5	1	-118	448	4.73	0.51	-0.03
106	SLE RA 6	1	-120	446	4.81	0.5	-0.03
106	SLE RA 7	1	-121	446	4.84	0.51	-0.03
106	SLE RA 8	1	-119	447	4.77	0.49	-0.03
106	SLE RA 9	1	-120	446	4.8	0.5	-0.03
106	SLE RA 10	1	-146	518	5.65	0.28	-0.03
106	SLE RA 11	1	-147	516	5.73	0.27	-0.03
106	SLE RA 12	1	-148	515	5.76	0.28	-0.03
106	SLE RA 13	1	-148	516	5.74	0.29	-0.03
106	SLE RA 14	1	-149	514	5.82	0.28	-0.03
106	SLE RA 15	1	-150	513	5.84	0.29	-0.03
106	SLE RA 16	1	-148	515	5.78	0.27	-0.03
106	SLE RA 17	1	-149	514	5.81	0.28	-0.03
106	SLE RA 18	1	-157	548	6.04	0.17	-0.03
106	SLE RA 19	1	-158	547	6.07	0.18	-0.03
106	SLE RA 20	1	-159	546	6.12	0.17	-0.03
106	SLE RA 21	1	-160	545	6.15	0.18	-0.03
106	SLE FR 1	1	-115	451	4.6	0.49	-0.03
106	SLE FR 2	1	-115	451	4.61	0.49	-0.03
106	SLE FR 3	1	-116	450	4.64	0.49	-0.03
106	SLE FR 4	1	-128	480	5.04	0.4	-0.03
106	SLE FR 5	1	-129	479	5.07	0.39	-0.03
106	SLE FR 6	1	-136	499	5.32	0.33	-0.03
106	SLE QP 1	1	-115	451	4.6	0.49	-0.03
106	SLE QP 2	1	-128	480	5.03	0.39	-0.03
106	SLD 1	8	-102	489	3.8	5.76	-0.1
106	SLD 2	8	-102	489	3.8	5.76	-0.1
106	SLD 3	9	-175	442	7.21	6.37	-0.11
106	SLD 4	9	-175	442	7.21	6.37	-0.11
106	SLD 5	2	-9	554	-0.51	1.07	-0.04
106	SLD 6	2	-9	554	-0.51	1.07	-0.04
106	SLD 7	5	-253	397	10.86	3.12	-0.07
106	SLD 8	5	-253	397	10.86	3.12	-0.07
106	SLD 9	-3	-3	563	-0.79	-2.33	0.01
106	SLD 10	-3	-3	563	-0.79	-2.33	0.01
106	SLD 11	0	-246	406	10.58	-0.29	-0.02
106	SLD 12	0	-246	406	10.58	-0.29	-0.02
106	SLD 13	-7	-81	518	2.86	-5.59	0.06
106	SLD 14	-7	-81	518	2.86	-5.59	0.06
106	SLD 15	-6	-154	471	6.27	-4.97	0.05
106	SLD 16	-6	-154	471	6.27	-4.97	0.05
106	SLV 1	17	-67	500	2.14	12.97	-0.21
106	SLV 2	17	-67	500	2.14	12.97	-0.21
106	SLV 3	19	-238	390	10.13	14.41	-0.23
106	SLV 4	19	-238	390	10.13	14.41	-0.23
106	SLV 5	3	150	653	-7.95	1.98	-0.05
106	SLV 6	3	150	653	-7.95	1.98	-0.05
106	SLV 7	9	-421	286	18.68	6.79	-0.12
106	SLV 8	9	-421	286	18.68	6.79	-0.12
106	SLV 9	-7	165	673	-8.61	-6	0.06
106	SLV 10	-7	165	673	-8.61	-6	0.06
106	SLV 11	-1	-406	307	18.02	-1.19	0
106	SLV 12	-1	-406	307	18.02	-1.19	0
106	SLV 13	-17	-18	570	-0.06	-13.63	0.17
106	SLV 14	-17	-18	570	-0.06	-13.63	0.17
106	SLV 15	-15	-189	460	7.93	-12.18	0.15
106	SLV 16	-15	-189	460	7.93	-12.18	0.15
107	SLU 1	13	-120	5246	4.45	9.7	-0.18
107	SLU 2	13	-209	5265	8.24	9.88	-0.18
107	SLU 3	13	-120	5369	4.47	10.01	-0.19
107	SLU 4	13	-173	5381	6.75	10.12	-0.19
107	SLU 5	13	-209	5345	8.29	10.09	-0.19
107	SLU 6	13	-120	5449	4.52	10.21	-0.19
107	SLU 7	14	-174	5461	6.8	10.32	-0.19
107	SLU 8	13	-121	5406	4.54	10.11	-0.19
107	SLU 9	13	-174	5417	6.82	10.22	-0.19
107	SLU 10	15	-238	6027	9.34	12.3	-0.23
107	SLU 11	16	-149	6131	5.57	12.43	-0.23
107	SLU 12	16	-202	6143	7.85	12.54	-0.24
107	SLU 13	16	-238	6107	9.39	12.51	-0.24
107	SLU 14	16	-149	6211	5.62	12.64	-0.24
107	SLU 15	16	-203	6223	7.9	12.75	-0.24
107	SLU 16	16	-150	6168	5.64	12.54	-0.24

Nodo	Cont.	Reazione a traslazione			Reazione a rotazione		
Ind.	N.br.	x	y	z	x	y	z
107	SLU 17	16	-203	6179	7.91	12.64	-0.24
107	SLU 18	16	-161	6334	6.02	13.16	-0.25
107	SLU 19	16	-215	6346	8.29	13.27	-0.25
107	SLU 20	17	-162	6414	6.06	13.37	-0.25
107	SLU 21	17	-215	6426	8.34	13.47	-0.25
107	SLU 22	14	-138	5861	5.18	11.11	-0.21
107	SLU 23	15	-227	5881	8.98	11.29	-0.21
107	SLU 24	15	-138	5985	5.21	11.42	-0.22
107	SLU 25	15	-191	5996	7.49	11.53	-0.22
107	SLU 26	15	-227	5961	9.03	11.5	-0.22
107	SLU 27	15	-138	6065	5.26	11.63	-0.22
107	SLU 28	15	-192	6076	7.54	11.74	-0.22
107	SLU 29	15	-139	6021	5.27	11.53	-0.22
107	SLU 30	15	-192	6033	7.55	11.64	-0.22
107	SLU 31	17	-256	6643	10.08	13.72	-0.26
107	SLU 32	17	-167	6747	6.31	13.85	-0.26
107	SLU 33	18	-220	6758	8.59	13.96	-0.27
107	SLU 34	17	-256	6723	10.12	13.93	-0.27
107	SLU 35	18	-167	6827	6.36	14.06	-0.27
107	SLU 36	18	-221	6838	8.64	14.16	-0.27
107	SLU 37	18	-168	6783	6.37	13.95	-0.27
107	SLU 38	18	-221	6795	8.65	14.06	-0.27
107	SLU 39	18	-180	6950	6.75	14.57	-0.28
107	SLU 40	18	-233	6962	9.03	14.68	-0.28
107	SLU 41	18	-180	7030	6.8	14.78	-0.28
107	SLU 42	19	-233	7042	9.08	14.89	-0.28
107	SLU 43	16	-150	6609	5.53	12.12	-0.22
107	SLU 44	16	-239	6628	9.32	12.3	-0.23
107	SLU 45	16	-150	6732	5.56	12.43	-0.23
107	SLU 46	16	-203	6743	7.83	12.54	-0.23
107	SLU 47	16	-239	6708	9.37	12.51	-0.23
107	SLU 48	17	-150	6812	5.6	12.64	-0.23
107	SLU 49	17	-203	6823	7.88	12.75	-0.23
107	SLU 50	16	-151	6769	5.62	12.54	-0.23
107	SLU 51	17	-204	6780	7.9	12.64	-0.23
107	SLU 52	19	-268	7390	10.42	14.72	-0.28
107	SLU 53	19	-179	7494	6.65	14.85	-0.28
107	SLU 54	19	-232	7505	8.93	14.96	-0.28
107	SLU 55	19	-268	7470	10.47	14.93	-0.28
107	SLU 56	19	-179	7574	6.7	15.06	-0.28
107	SLU 57	19	-232	7585	8.98	15.17	-0.28
107	SLU 58	19	-180	7531	6.72	14.96	-0.28
107	SLU 59	19	-233	7542	9	15.07	-0.28
107	SLU 60	20	-191	7697	7.1	15.58	-0.29
107	SLU 61	20	-245	7709	9.37	15.69	-0.3
107	SLU 62	20	-192	7777	7.14	15.79	-0.3
107	SLU 63	20	-245	7789	9.42	15.9	-0.3
107	SLU 64	18	-168	7224	6.26	13.54	-0.25
107	SLU 65	18	-257	7243	10.06	13.72	-0.26
107	SLU 66	18	-168	7347	6.29	13.85	-0.26
107	SLU 67	18	-221	7359	8.57	13.96	-0.26
107	SLU 68	18	-257	7323	10.11	13.93	-0.26
107	SLU 69	18	-168	7427	6.34	14.06	-0.26
107	SLU 70	18	-221	7439	8.62	14.16	-0.26
107	SLU 71	18	-169	7384	6.36	13.95	-0.26
107	SLU 72	18	-222	7396	8.63	14.06	-0.26
107	SLU 73	20	-286	8005	11.16	16.14	-0.31
107	SLU 74	21	-197	8109	7.39	16.27	-0.31
107	SLU 75	21	-250	8121	9.67	16.38	-0.31
107	SLU 76	21	-286	8085	11.21	16.35	-0.31
107	SLU 77	21	-197	8189	7.44	16.48	-0.31
107	SLU 78	21	-251	8201	9.72	16.59	-0.31
107	SLU 79	21	-198	8146	7.45	16.38	-0.31
107	SLU 80	21	-251	8158	9.73	16.48	-0.31
107	SLU 81	21	-209	8313	7.83	17	-0.32
107	SLU 82	21	-263	8324	10.11	17.11	-0.33
107	SLU 83	22	-210	8393	7.88	17.21	-0.33
107	SLU 84	22	-263	8404	10.16	17.31	-0.33
107	SLE RA 1	13	-125	5422	4.66	10.1	-0.19
107	SLE RA 2	13	-184	5435	7.19	10.22	-0.19
107	SLE RA 3	13	-125	5504	4.68	10.31	-0.19
107	SLE RA 4	14	-161	5512	6.19	10.38	-0.19
107	SLE RA 5	14	-185	5488	7.22	10.36	-0.19
107	SLE RA 6	14	-125	5557	4.71	10.45	-0.19
107	SLE RA 7	14	-161	5565	6.23	10.52	-0.2
107	SLE RA 8	14	-126	5528	4.72	10.38	-0.19
107	SLE RA 9	14	-161	5536	6.24	10.45	-0.19
107	SLE RA 10	15	-204	5943	7.92	11.84	-0.22
107	SLE RA 11	15	-144	6012	5.41	11.92	-0.22
107	SLE RA 12	15	-180	6020	6.93	12	-0.23
107	SLE RA 13	15	-204	5996	7.95	11.98	-0.23
107	SLE RA 14	15	-145	6065	5.44	12.06	-0.23
107	SLE RA 15	15	-180	6073	6.96	12.13	-0.23
107	SLE RA 16	15	-145	6036	5.45	11.99	-0.23
107	SLE RA 17	15	-181	6044	6.97	12.07	-0.23
107	SLE RA 18	16	-153	6147	5.7	12.41	-0.24
107	SLE RA 19	16	-188	6155	7.22	12.48	-0.24
107	SLE RA 20	16	-153	6201	5.73	12.55	-0.24
107	SLE RA 21	16	-189	6208	7.25	12.62	-0.24
107	SLE FR 1	13	-125	5422	4.66	10.1	-0.19

Nodo	Cont.	Reazione a traslazione			Reazione a rotazione		
Ind.	N.br.	x	y	z	x	y	z
107	SLE FR 2	13	-137	5424	5.16	10.13	-0.19
107	SLE FR 3	13	-125	5443	4.67	10.16	-0.19
107	SLE FR 4	14	-145	5642	5.48	10.82	-0.2
107	SLE FR 5	14	-134	5661	4.98	10.85	-0.2
107	SLE FR 6	14	-139	5785	5.18	11.26	-0.21
107	SLE QP 1	13	-125	5422	4.66	10.1	-0.19
107	SLE QP 2	14	-134	5639	4.97	10.79	-0.2
107	SLD 1	24	209	5399	-9.25	21.06	-0.37
107	SLD 2	24	209	5399	-9.25	21.06	-0.37
107	SLD 3	21	-190	5304	7.51	23.02	-0.4
107	SLD 4	21	-190	5304	7.51	23.02	-0.4
107	SLD 5	21	576	5713	-24.72	10.91	-0.21
107	SLD 6	21	576	5713	-24.72	10.91	-0.21
107	SLD 7	12	-757	5393	31.16	17.43	-0.3
107	SLD 8	12	-757	5393	31.16	17.43	-0.3
107	SLD 9	16	490	5886	-21.22	4.16	-0.1
107	SLD 10	16	490	5886	-21.22	4.16	-0.1
107	SLD 11	7	-843	5566	34.66	10.68	-0.19
107	SLD 12	7	-843	5566	34.66	10.68	-0.19
107	SLD 13	7	-77	5975	2.43	-1.43	-0.01
107	SLD 14	7	-77	5975	2.43	-1.43	-0.01
107	SLD 15	4	-476	5879	19.19	0.52	-0.03
107	SLD 16	4	-476	5879	19.19	0.52	-0.03
107	SLV 1	37	673	5079	-28.49	34.8	-0.6
107	SLV 2	37	673	5079	-28.49	34.8	-0.6
107	SLV 3	30	-266	4852	10.91	39.48	-0.66
107	SLV 4	30	-266	4852	10.91	39.48	-0.66
107	SLV 5	30	1533	5817	-64.82	10.89	-0.23
107	SLV 6	30	1533	5817	-64.82	10.89	-0.23
107	SLV 7	9	-1598	5058	66.5	26.5	-0.44
107	SLV 8	9	-1598	5058	66.5	26.5	-0.44
107	SLV 9	19	1331	6221	-56.56	-4.92	0.03
107	SLV 10	19	1331	6221	-56.56	-4.92	0.03
107	SLV 11	-3	-1800	5462	74.76	10.69	-0.18
107	SLV 12	-3	-1800	5462	74.76	10.69	-0.18
107	SLV 13	-2	-1	6427	-0.97	-17.9	0.25
107	SLV 14	-2	-1	6427	-0.97	-17.9	0.25
107	SLV 15	-9	-940	6200	38.43	-13.21	0.19
107	SLV 16	-9	-940	6200	38.43	-13.21	0.19
108	SLU 1	23	813	6523	-13.68	20.07	-0.28
108	SLU 2	18	826	6665	-14.37	15.81	-0.22
108	SLU 3	24	847	6674	-14.48	20.6	-0.28
108	SLU 4	21	855	6759	-14.89	18.04	-0.25
108	SLU 5	18	851	6742	-15.05	16.08	-0.22
108	SLU 6	24	871	6751	-15.16	20.88	-0.29
108	SLU 7	21	879	6837	-15.57	18.32	-0.25
108	SLU 8	24	862	6677	-15.05	20.62	-0.28
108	SLU 9	21	870	6762	-15.46	18.07	-0.25
108	SLU 10	21	929	7457	-16.03	18.51	-0.25
108	SLU 11	27	949	7465	-16.15	23.3	-0.32
108	SLU 12	24	957	7551	-16.56	20.75	-0.29
108	SLU 13	21	953	7534	-16.72	18.79	-0.26
108	SLU 14	28	974	7543	-16.83	23.58	-0.33
108	SLU 15	24	982	7628	-17.24	21.03	-0.29
108	SLU 16	27	964	7468	-16.71	23.33	-0.32
108	SLU 17	24	972	7554	-17.12	20.77	-0.29
108	SLU 18	28	960	7653	-16.06	23.93	-0.33
108	SLU 19	25	968	7739	-16.47	21.37	-0.29
108	SLU 20	28	984	7730	-16.74	24.21	-0.33
108	SLU 21	25	992	7816	-17.16	21.65	-0.3
108	SLU 22	27	919	7276	-15.52	22.66	-0.31
108	SLU 23	21	932	7419	-16.21	18.4	-0.25
108	SLU 24	27	953	7427	-16.32	23.19	-0.32
108	SLU 25	24	961	7513	-16.74	20.63	-0.28
108	SLU 26	21	957	7496	-16.9	18.67	-0.26
108	SLU 27	28	977	7504	-17.01	23.47	-0.32
108	SLU 28	24	985	7590	-17.42	20.91	-0.29
108	SLU 29	27	968	7430	-16.89	23.21	-0.32
108	SLU 30	24	976	7516	-17.3	20.66	-0.28
108	SLU 31	24	1035	8210	-17.88	21.1	-0.29
108	SLU 32	30	1055	8219	-17.99	25.89	-0.36
108	SLU 33	27	1063	8304	-18.4	23.34	-0.32
108	SLU 34	25	1059	8287	-18.56	21.38	-0.29
108	SLU 35	31	1080	8296	-18.67	26.17	-0.36
108	SLU 36	27	1088	8381	-19.08	23.61	-0.33
108	SLU 37	30	1070	8222	-18.56	25.91	-0.36
108	SLU 38	27	1078	8307	-18.97	23.36	-0.32
108	SLU 39	31	1066	8407	-17.9	26.52	-0.37
108	SLU 40	28	1074	8492	-18.32	23.96	-0.33
108	SLU 41	31	1090	8484	-18.59	26.8	-0.37
108	SLU 42	28	1098	8569	-19	24.24	-0.33
108	SLU 43	29	1021	8221	-17.15	25.2	-0.35
108	SLU 44	24	1034	8364	-17.84	20.94	-0.29
108	SLU 45	30	1054	8373	-17.95	25.73	-0.35
108	SLU 46	27	1062	8458	-18.36	23.18	-0.32
108	SLU 47	24	1058	8441	-18.52	21.22	-0.29
108	SLU 48	30	1079	8450	-18.63	26.01	-0.36
108	SLU 49	27	1087	8535	-19.05	23.45	-0.32
108	SLU 50	30	1070	8375	-18.52	25.75	-0.36
108	SLU 51	27	1077	8461	-18.93	23.2	-0.32

Nodo	Cont.	Reazione a traslazione			Reazione a rotazione		
Ind.	N.br.	x	y	z	x	y	z
108	SLU 52	27	1136	9155	-19.51	23.64	-0.32
108	SLU 53	33	1157	9164	-19.62	28.44	-0.39
108	SLU 54	30	1165	9249	-20.03	25.88	-0.36
108	SLU 55	27	1161	9232	-20.19	23.92	-0.33
108	SLU 56	34	1181	9241	-20.3	28.71	-0.4
108	SLU 57	30	1189	9327	-20.71	26.16	-0.36
108	SLU 58	33	1172	9167	-20.18	28.46	-0.39
108	SLU 59	30	1180	9252	-20.6	25.9	-0.36
108	SLU 60	34	1167	9352	-19.53	29.06	-0.4
108	SLU 61	31	1175	9437	-19.95	26.5	-0.36
108	SLU 62	34	1192	9429	-20.22	29.34	-0.41
108	SLU 63	31	1200	9514	-20.63	26.78	-0.37
108	SLU 64	33	1127	8975	-19	27.79	-0.38
108	SLU 65	27	1140	9117	-19.68	23.53	-0.32
108	SLU 66	33	1160	9126	-19.8	28.32	-0.39
108	SLU 67	30	1168	9211	-20.21	25.77	-0.35
108	SLU 68	27	1164	9194	-20.37	23.81	-0.33
108	SLU 69	34	1185	9203	-20.48	28.6	-0.39
108	SLU 70	30	1193	9288	-20.89	26.04	-0.36
108	SLU 71	33	1176	9129	-20.36	28.34	-0.39
108	SLU 72	30	1184	9214	-20.77	25.79	-0.36
108	SLU 73	30	1243	9909	-21.35	26.23	-0.36
108	SLU 74	36	1263	9917	-21.46	31.03	-0.43
108	SLU 75	33	1271	10003	-21.87	28.47	-0.39
108	SLU 76	30	1267	9986	-22.03	26.51	-0.36
108	SLU 77	37	1287	9994	-22.14	31.3	-0.43
108	SLU 78	33	1295	10080	-22.56	28.75	-0.4
108	SLU 79	36	1278	9920	-22.03	31.05	-0.43
108	SLU 80	33	1286	10006	-22.44	28.49	-0.39
108	SLU 81	37	1273	10105	-21.38	31.65	-0.44
108	SLU 82	34	1281	10191	-21.79	29.09	-0.4
108	SLU 83	37	1298	10182	-22.06	31.93	-0.44
108	SLU 84	34	1306	10268	-22.47	29.37	-0.4
108	SLE RA 1	24	843	6738	-14.21	20.81	-0.29
108	SLE RA 2	21	852	6833	-14.67	17.97	-0.25
108	SLE RA 3	25	866	6839	-14.74	21.16	-0.29
108	SLE RA 4	23	871	6896	-15.02	19.46	-0.27
108	SLE RA 5	21	869	6884	-15.12	18.15	-0.25
108	SLE RA 6	25	882	6890	-15.2	21.35	-0.29
108	SLE RA 7	23	887	6947	-15.47	19.64	-0.27
108	SLE RA 8	25	876	6841	-15.12	21.18	-0.29
108	SLE RA 9	23	881	6898	-15.39	19.47	-0.27
108	SLE RA 10	23	921	7361	-15.78	19.77	-0.27
108	SLE RA 11	27	934	7366	-15.85	22.96	-0.32
108	SLE RA 12	25	939	7423	-16.13	21.26	-0.29
108	SLE RA 13	23	937	7412	-16.23	19.95	-0.27
108	SLE RA 14	27	950	7418	-16.31	23.15	-0.32
108	SLE RA 15	25	956	7475	-16.58	21.45	-0.3
108	SLE RA 16	27	944	7368	-16.23	22.98	-0.32
108	SLE RA 17	25	950	7425	-16.5	21.27	-0.29
108	SLE RA 18	27	941	7492	-15.79	23.38	-0.32
108	SLE RA 19	25	946	7549	-16.07	21.68	-0.3
108	SLE RA 20	28	957	7543	-16.25	23.57	-0.33
108	SLE RA 21	25	963	7600	-16.52	21.86	-0.3
108	SLE FR 1	24	843	6738	-14.21	20.81	-0.29
108	SLE FR 2	24	845	6757	-14.3	20.24	-0.28
108	SLE FR 3	24	850	6759	-14.39	20.88	-0.29
108	SLE FR 4	25	874	6983	-14.78	21.01	-0.29
108	SLE FR 5	25	879	6985	-14.87	21.65	-0.3
108	SLE FR 6	26	892	7115	-15	22.09	-0.3
108	SLE QP 1	24	843	6738	-14.21	20.81	-0.29
108	SLE QP 2	25	873	6964	-14.68	21.58	-0.3
108	SLD 1	59	1153	8801	-23.02	49.13	-0.7
108	SLD 2	59	1153	8801	-23.02	49.13	-0.7
108	SLD 3	50	829	8133	-12.38	43.09	-0.59
108	SLD 4	50	829	8133	-12.38	43.09	-0.59
108	SLD 5	49	1448	8528	-33.33	39.02	-0.57
108	SLD 6	49	1448	8528	-33.33	39.02	-0.57
108	SLD 7	19	368	6302	2.16	18.86	-0.23
108	SLD 8	19	368	6302	2.16	18.86	-0.23
108	SLD 9	32	1377	7626	-31.53	24.3	-0.36
108	SLD 10	32	1377	7626	-31.53	24.3	-0.36
108	SLD 11	1	298	5400	3.97	4.14	-0.02
108	SLD 12	1	298	5400	3.97	4.14	-0.02
108	SLD 13	0	917	5795	-16.99	0.07	0
108	SLD 14	0	917	5795	-16.99	0.07	0
108	SLD 15	-9	593	5127	-6.34	-5.98	0.1
108	SLD 16	-9	593	5127	-6.34	-5.98	0.1
108	SLV 1	106	1528	11274	-34.21	86.37	-1.24
108	SLV 2	106	1528	11274	-34.21	86.37	-1.24
108	SLV 3	83	774	9692	-9.44	71.67	-0.99
108	SLV 4	83	774	9692	-9.44	71.67	-0.99
108	SLV 5	84	2212	10656	-58.11	63.3	-0.96
108	SLV 6	84	2212	10656	-58.11	63.3	-0.96
108	SLV 7	9	-300	5383	24.46	14.32	-0.13
108	SLV 8	9	-300	5383	24.46	14.32	-0.13
108	SLV 9	42	2045	8545	-53.82	28.84	-0.47
108	SLV 10	42	2045	8545	-53.82	28.84	-0.47
108	SLV 11	-33	-467	3272	28.74	-20.14	0.36
108	SLV 12	-33	-467	3272	28.74	-20.14	0.36

Nodo	Cont.	Reazione a traslazione			Reazione a rotazione		
Ind.	N.br.	x	y	z	x	y	z
108	SLV 13	-33	971	4236	-19.92	-28.52	0.39
108	SLV 14	-33	971	4236	-19.92	-28.52	0.39
108	SLV 15	-55	218	2654	4.84	-43.21	0.64
108	SLV 16	-55	218	2654	4.84	-43.21	0.64
109	SLU 1	9	82	2889	-0.7	7.33	0
109	SLU 2	10	294	2982	-8.36	7.96	0
109	SLU 3	10	89	2951	-1.08	7.55	0
109	SLU 4	10	217	3007	-5.68	7.93	0
109	SLU 5	10	300	3016	-8.73	8.09	0
109	SLU 6	10	96	2985	-1.44	7.67	0
109	SLU 7	10	223	3041	-6.04	8.05	0
109	SLU 8	10	95	2957	-1.43	7.58	0
109	SLU 9	10	222	3013	-6.03	7.96	0
109	SLU 10	12	296	3363	-8.34	9.1	0
109	SLU 11	11	92	3331	-1.05	8.68	0
109	SLU 12	12	219	3387	-5.65	9.06	0
109	SLU 13	12	303	3397	-8.7	9.22	0
109	SLU 14	11	98	3365	-1.42	8.81	0
109	SLU 15	12	225	3421	-6.01	9.18	0
109	SLU 16	11	97	3338	-1.4	8.71	0
109	SLU 17	12	224	3394	-6	9.09	0
109	SLU 18	11	85	3433	-0.66	8.95	0
109	SLU 19	12	213	3489	-5.26	9.33	0
109	SLU 20	12	92	3467	-1.02	9.08	0
109	SLU 21	12	219	3523	-5.62	9.45	0
109	SLU 22	11	91	3239	-0.99	8.4	0
109	SLU 23	12	303	3332	-8.66	9.03	0
109	SLU 24	11	98	3301	-1.37	8.62	0
109	SLU 25	12	225	3356	-5.97	9	0
109	SLU 26	12	309	3366	-9.02	9.16	0
109	SLU 27	11	104	3335	-1.74	8.74	0
109	SLU 28	12	232	3391	-6.33	9.12	0
109	SLU 29	11	103	3307	-1.72	8.65	0
109	SLU 30	12	231	3363	-6.32	9.03	0
109	SLU 31	13	305	3712	-8.63	10.17	0
109	SLU 32	13	100	3681	-1.34	9.76	0
109	SLU 33	13	228	3737	-5.94	10.13	0
109	SLU 34	13	312	3747	-8.99	10.29	0
109	SLU 35	13	107	3715	-1.71	9.88	0
109	SLU 36	13	234	3771	-6.3	10.26	0
109	SLU 37	13	106	3687	-1.69	9.79	0
109	SLU 38	13	233	3743	-6.29	10.16	0
109	SLU 39	13	94	3782	-0.95	10.03	0
109	SLU 40	13	221	3838	-5.55	10.4	0
109	SLU 41	13	100	3816	-1.32	10.15	0
109	SLU 42	14	228	3872	-5.91	10.53	0
109	SLU 43	12	103	3635	-0.81	9.16	0
109	SLU 44	13	316	3729	-8.47	9.79	0
109	SLU 45	12	111	3697	-1.19	9.38	0
109	SLU 46	13	238	3753	-5.79	9.76	0
109	SLU 47	13	322	3763	-8.84	9.92	0
109	SLU 48	12	117	3732	-1.56	9.5	0
109	SLU 49	13	244	3787	-6.15	9.88	0
109	SLU 50	12	116	3704	-1.54	9.41	0
109	SLU 51	13	243	3760	-6.14	9.79	0
109	SLU 52	14	318	4109	-8.45	10.93	0
109	SLU 53	13	113	4078	-1.16	10.51	0
109	SLU 54	14	240	4134	-5.76	10.89	0
109	SLU 55	14	324	4143	-8.81	11.05	0
109	SLU 56	14	120	4112	-1.53	10.64	0
109	SLU 57	14	247	4168	-6.12	11.02	0
109	SLU 58	14	119	4084	-1.51	10.54	0
109	SLU 59	14	246	4140	-6.11	10.92	0
109	SLU 60	14	107	4179	-0.77	10.78	0
109	SLU 61	14	234	4235	-5.37	11.16	0
109	SLU 62	14	113	4213	-1.14	10.91	0
109	SLU 63	15	241	4269	-5.73	11.29	0
109	SLU 64	13	112	3985	-1.1	10.23	0
109	SLU 65	14	324	4079	-8.77	10.87	0
109	SLU 66	13	120	4047	-1.48	10.45	0
109	SLU 67	14	247	4103	-6.08	10.83	0
109	SLU 68	14	331	4113	-9.13	10.99	0
109	SLU 69	14	126	4081	-1.85	10.57	0
109	SLU 70	14	253	4137	-6.44	10.95	0
109	SLU 71	13	125	4053	-1.83	10.48	0
109	SLU 72	14	252	4109	-6.43	10.86	0
109	SLU 73	15	327	4459	-8.74	12	0
109	SLU 74	15	122	4428	-1.45	11.59	0
109	SLU 75	15	249	4484	-6.05	11.97	0
109	SLU 76	16	333	4493	-9.1	12.12	0
109	SLU 77	15	128	4462	-1.82	11.71	0
109	SLU 78	16	256	4518	-6.41	12.09	0
109	SLU 79	15	127	4434	-1.8	11.62	0
109	SLU 80	15	255	4490	-6.4	12	0
109	SLU 81	15	116	4529	-1.06	11.86	0
109	SLU 82	16	243	4585	-5.66	12.24	0
109	SLU 83	15	122	4563	-1.43	11.98	0
109	SLU 84	16	249	4619	-6.02	12.36	0
109	SLE RA 1	10	84	2989	-0.79	7.64	0
109	SLE RA 2	10	226	3051	-5.89	8.06	0

Nodo	Cont.	Reazione a traslazione			Reazione a rotazione		
Ind.	N.br.	x	y	z	x	y	z
109	SLE RA 3	10	89	3030	-1.04	7.78	0
109	SLE RA 4	10	174	3067	-4.1	8.03	0
109	SLE RA 5	11	230	3074	-6.14	8.14	0
109	SLE RA 6	10	94	3053	-1.28	7.86	0
109	SLE RA 7	10	178	3090	-4.34	8.12	0
109	SLE RA 8	10	93	3034	-1.27	7.8	0
109	SLE RA 9	10	178	3071	-4.33	8.05	0
109	SLE RA 10	11	227	3305	-5.87	8.81	0
109	SLE RA 11	11	91	3284	-1.02	8.54	0
109	SLE RA 12	11	176	3321	-4.08	8.79	0
109	SLE RA 13	11	232	3327	-6.12	8.9	0
109	SLE RA 14	11	95	3307	-1.26	8.62	0
109	SLE RA 15	11	180	3344	-4.33	8.87	0
109	SLE RA 16	11	94	3288	-1.25	8.56	0
109	SLE RA 17	11	179	3325	-4.32	8.81	0
109	SLE RA 18	11	87	3351	-0.76	8.72	0
109	SLE RA 19	12	172	3389	-3.82	8.97	0
109	SLE RA 20	11	91	3374	-1	8.8	0
109	SLE RA 21	12	176	3411	-4.07	9.05	0
109	SLE FR 1	10	84	2989	-0.79	7.64	0
109	SLE FR 2	10	113	3001	-1.81	7.72	0
109	SLE FR 3	10	86	2998	-0.88	7.67	0
109	SLE FR 4	10	113	3110	-1.8	8.05	0
109	SLE FR 5	10	87	3107	-0.87	7.99	0
109	SLE FR 6	10	85	3170	-0.77	8.18	0
109	SLE QP 1	10	84	2989	-0.79	7.64	0
109	SLE QP 2	10	85	3097	-0.78	7.96	0
109	SLD 1	17	95	3042	-13.19	15.07	-0.01
109	SLD 2	17	95	3042	-13.19	15.07	-0.01
109	SLD 3	15	-277	2814	-0.27	13.1	-0.01
109	SLD 4	15	-277	2814	-0.27	13.1	-0.01
109	SLD 5	16	653	3428	-24.1	13.07	0
109	SLD 6	16	653	3428	-24.1	13.07	0
109	SLD 7	7	-588	2666	18.98	6.53	-0.01
109	SLD 8	7	-588	2666	18.98	6.53	-0.01
109	SLD 9	13	758	3529	-20.53	9.4	0
109	SLD 10	13	758	3529	-20.53	9.4	0
109	SLD 11	4	-483	2767	22.55	2.85	0
109	SLD 12	4	-483	2767	22.55	2.85	0
109	SLD 13	6	447	3381	-1.29	2.82	0
109	SLD 14	6	447	3381	-1.29	2.82	0
109	SLD 15	3	75	3153	11.64	0.86	0
109	SLD 16	3	75	3153	11.64	0.86	0
109	SLV 1	27	115	2969	-30.42	24.74	-0.01
109	SLV 2	27	115	2969	-30.42	24.74	-0.01
109	SLV 3	21	-779	2427	0.58	19.89	-0.02
109	SLV 4	21	-779	2427	0.58	19.89	-0.02
109	SLV 5	25	1450	3881	-56.68	20.36	0
109	SLV 6	25	1450	3881	-56.68	20.36	0
109	SLV 7	3	-1531	2074	46.64	4.18	-0.01
109	SLV 8	3	-1531	2074	46.64	4.18	-0.01
109	SLV 9	17	1701	4121	-48.2	11.74	0.01
109	SLV 10	17	1701	4121	-48.2	11.74	0.01
109	SLV 11	-5	-1280	2314	55.13	-4.43	0
109	SLV 12	-5	-1280	2314	55.13	-4.43	0
109	SLV 13	0	949	3768	-2.13	-3.97	0.01
109	SLV 14	0	949	3768	-2.13	-3.97	0.01
109	SLV 15	-7	55	3226	28.86	-8.82	0.01
109	SLV 16	-7	55	3226	28.86	-8.82	0.01
110	SLU 1	7	136	5924	-9.71	6.17	-0.02
110	SLU 2	8	42	5954	-6.3	6.33	-0.02
110	SLU 3	8	146	6071	-10.33	6.34	-0.02
110	SLU 4	8	90	6089	-8.28	6.43	-0.02
110	SLU 5	8	49	6051	-6.72	6.42	-0.02
110	SLU 6	8	153	6169	-10.75	6.43	-0.02
110	SLU 7	8	97	6187	-8.7	6.53	-0.02
110	SLU 8	8	150	6119	-10.55	6.36	-0.02
110	SLU 9	8	94	6137	-8.5	6.46	-0.02
110	SLU 10	7	83	6784	-8.59	5.82	-0.01
110	SLU 11	7	187	6902	-12.62	5.83	-0.01
110	SLU 12	7	131	6920	-10.58	5.92	-0.01
110	SLU 13	7	90	6882	-9.01	5.91	-0.01
110	SLU 14	8	194	6999	-13.04	5.92	-0.01
110	SLU 15	8	138	7017	-11	6.02	-0.01
110	SLU 16	7	190	6950	-12.85	5.85	-0.01
110	SLU 17	8	134	6968	-10.8	5.95	-0.01
110	SLU 18	7	194	7110	-12.99	5.44	-0.01
110	SLU 19	7	138	7128	-10.94	5.54	-0.01
110	SLU 20	7	201	7208	-13.41	5.54	-0.01
110	SLU 21	7	145	7226	-11.36	5.63	-0.01
110	SLU 22	8	168	6587	-11.7	6.7	-0.02
110	SLU 23	8	75	6617	-8.29	6.86	-0.02
110	SLU 24	8	179	6735	-12.32	6.87	-0.02
110	SLU 25	8	123	6753	-10.28	6.96	-0.02
110	SLU 26	8	82	6715	-8.71	6.95	-0.02
110	SLU 27	9	186	6832	-12.74	6.96	-0.02
110	SLU 28	9	130	6850	-10.7	7.06	-0.02
110	SLU 29	8	182	6783	-12.54	6.89	-0.02
110	SLU 30	9	126	6801	-10.5	6.99	-0.02
110	SLU 31	8	116	7448	-10.59	6.35	-0.01

Nodo	Cont.	Reazione a traslazione			Reazione a rotazione		
Ind.	N.br.	x	y	z	x	y	z
110	SLU 32	8	220	7565	-14.62	6.36	-0.01
110	SLU 33	8	164	7583	-12.57	6.45	-0.02
110	SLU 34	8	123	7546	-11.01	6.44	-0.02
110	SLU 35	8	227	7663	-15.04	6.45	-0.02
110	SLU 36	8	171	7681	-12.99	6.55	-0.02
110	SLU 37	8	223	7613	-14.84	6.38	-0.02
110	SLU 38	8	167	7631	-12.79	6.48	-0.02
110	SLU 39	8	226	7774	-14.98	5.97	-0.01
110	SLU 40	8	170	7792	-12.94	6.06	-0.01
110	SLU 41	8	233	7872	-15.4	6.07	-0.01
110	SLU 42	8	177	7890	-13.36	6.16	-0.01
110	SLU 43	9	165	7473	-11.94	7.84	-0.02
110	SLU 44	10	72	7503	-8.53	8	-0.02
110	SLU 45	10	176	7621	-12.56	8.01	-0.02
110	SLU 46	10	120	7639	-10.51	8.1	-0.02
110	SLU 47	10	79	7601	-8.95	8.09	-0.02
110	SLU 48	10	183	7718	-12.98	8.1	-0.02
110	SLU 49	10	127	7736	-10.93	8.2	-0.02
110	SLU 50	10	179	7668	-12.78	8.03	-0.02
110	SLU 51	10	123	7686	-10.73	8.13	-0.02
110	SLU 52	9	112	8334	-10.82	7.49	-0.02
110	SLU 53	9	216	8451	-14.85	7.5	-0.02
110	SLU 54	9	160	8469	-12.81	7.59	-0.02
110	SLU 55	9	119	8432	-11.24	7.58	-0.02
110	SLU 56	10	223	8549	-15.27	7.59	-0.02
110	SLU 57	10	167	8567	-13.23	7.69	-0.02
110	SLU 58	9	220	8499	-15.07	7.52	-0.02
110	SLU 59	10	164	8517	-13.03	7.62	-0.02
110	SLU 60	9	223	8660	-15.22	7.11	-0.02
110	SLU 61	9	167	8678	-13.17	7.2	-0.02
110	SLU 62	9	230	8758	-15.64	7.21	-0.02
110	SLU 63	9	174	8776	-13.59	7.3	-0.02
110	SLU 64	10	198	8137	-13.93	8.37	-0.02
110	SLU 65	10	104	8167	-10.52	8.53	-0.02
110	SLU 66	10	209	8284	-14.55	8.54	-0.02
110	SLU 67	10	153	8302	-12.51	8.63	-0.02
110	SLU 68	10	111	8265	-10.94	8.62	-0.02
110	SLU 69	11	216	8382	-14.97	8.63	-0.02
110	SLU 70	11	160	8400	-12.93	8.73	-0.02
110	SLU 71	10	212	8332	-14.77	8.56	-0.02
110	SLU 72	11	156	8350	-12.73	8.66	-0.02
110	SLU 73	10	145	8998	-12.82	8.02	-0.02
110	SLU 74	10	249	9115	-16.85	8.03	-0.02
110	SLU 75	10	193	9133	-14.8	8.12	-0.02
110	SLU 76	10	152	9095	-13.24	8.11	-0.02
110	SLU 77	10	256	9213	-17.27	8.12	-0.02
110	SLU 78	10	200	9231	-15.22	8.22	-0.02
110	SLU 79	10	252	9163	-17.07	8.05	-0.02
110	SLU 80	10	196	9181	-15.02	8.15	-0.02
110	SLU 81	10	256	9324	-17.21	7.64	-0.02
110	SLU 82	10	200	9342	-15.17	7.73	-0.02
110	SLU 83	10	263	9421	-17.63	7.74	-0.02
110	SLU 84	10	207	9439	-15.59	7.83	-0.02
110	SLE RA 1	8	145	6113	-10.28	6.32	-0.02
110	SLE RA 2	8	83	6133	-8.01	6.43	-0.02
110	SLE RA 3	8	152	6212	-10.69	6.43	-0.02
110	SLE RA 4	8	115	6224	-9.33	6.5	-0.02
110	SLE RA 5	8	87	6198	-8.29	6.49	-0.02
110	SLE RA 6	8	157	6277	-10.97	6.5	-0.02
110	SLE RA 7	8	119	6289	-9.61	6.56	-0.02
110	SLE RA 8	8	154	6243	-10.84	6.45	-0.02
110	SLE RA 9	8	117	6255	-9.48	6.51	-0.02
110	SLE RA 10	8	110	6687	-9.54	6.09	-0.01
110	SLE RA 11	8	179	6765	-12.22	6.09	-0.01
110	SLE RA 12	8	142	6777	-10.86	6.16	-0.01
110	SLE RA 13	8	114	6752	-9.82	6.15	-0.01
110	SLE RA 14	8	184	6830	-12.5	6.16	-0.01
110	SLE RA 15	8	146	6842	-11.14	6.22	-0.01
110	SLE RA 16	8	181	6797	-12.37	6.11	-0.01
110	SLE RA 17	8	144	6809	-11.01	6.17	-0.01
110	SLE RA 18	7	184	6904	-12.47	5.83	-0.01
110	SLE RA 19	7	146	6916	-11.1	5.9	-0.01
110	SLE RA 20	7	188	6970	-12.75	5.9	-0.01
110	SLE RA 21	8	151	6982	-11.38	5.96	-0.01
110	SLE FR 1	8	145	6113	-10.28	6.32	-0.02
110	SLE FR 2	8	133	6117	-9.83	6.34	-0.02
110	SLE FR 3	8	147	6139	-10.39	6.35	-0.02
110	SLE FR 4	8	144	6355	-10.48	6.2	-0.01
110	SLE FR 5	8	158	6377	-11.05	6.2	-0.01
110	SLE FR 6	8	164	6509	-11.37	6.08	-0.01
110	SLE QP 1	8	145	6113	-10.28	6.32	-0.02
110	SLE QP 2	8	157	6351	-10.94	6.17	-0.01
110	SLD 1	34	508	6641	-23.64	27.8	-0.07
110	SLD 2	34	508	6641	-23.64	27.8	-0.07
110	SLD 3	31	103	6540	-9.16	30.71	-0.08
110	SLD 4	31	103	6540	-9.16	30.71	-0.08
110	SLD 5	20	877	6590	-36.71	8.25	-0.02
110	SLD 6	20	877	6590	-36.71	8.25	-0.02
110	SLD 7	10	-474	6255	11.56	17.94	-0.05
110	SLD 8	10	-474	6255	11.56	17.94	-0.05

Nodo	Cont.	Reazione a traslazione			Reazione a rotazione		
Ind.	N.br.	x	y	z	x	y	z
110	SLD 9	6	787	6447	-33.43	-5.59	0.02
110	SLD 10	6	787	6447	-33.43	-5.59	0.02
110	SLD 11	-5	-564	6111	14.84	4.1	-0.01
110	SLD 12	-5	-564	6111	14.84	4.1	-0.01
110	SLD 13	-15	210	6162	-12.71	-18.36	0.05
110	SLD 14	-15	210	6162	-12.71	-18.36	0.05
110	SLD 15	-19	-195	6061	1.77	-15.45	0.04
110	SLD 16	-19	-195	6061	1.77	-15.45	0.04
110	SLV 1	69	983	7034	-40.77	56.8	-0.15
110	SLV 2	69	983	7034	-40.77	56.8	-0.15
110	SLV 3	62	31	6793	-6.77	63.61	-0.17
110	SLV 4	62	31	6793	-6.77	63.61	-0.17
110	SLV 5	37	1847	6921	-71.45	11.03	-0.03
110	SLV 6	37	1847	6921	-71.45	11.03	-0.03
110	SLV 7	13	-1324	6118	41.88	33.74	-0.09
110	SLV 8	13	-1324	6118	41.88	33.74	-0.09
110	SLV 9	3	1637	6583	-63.75	-21.39	0.06
110	SLV 10	3	1637	6583	-63.75	-21.39	0.06
110	SLV 11	-22	-1534	5780	49.58	1.32	0
110	SLV 12	-22	-1534	5780	49.58	1.32	0
110	SLV 13	-46	282	5908	-15.11	-51.26	0.14
110	SLV 14	-46	282	5908	-15.11	-51.26	0.14
110	SLV 15	-54	-670	5667	18.89	-44.45	0.12
110	SLV 16	-54	-670	5667	18.89	-44.45	0.12
111	SLU 1	-1	450	3797	-17.27	-0.46	0
111	SLU 2	-2	665	3887	-26.76	-1.13	0
111	SLU 3	-1	466	3885	-17.56	-0.48	0
111	SLU 4	-1	595	3939	-23.26	-0.88	0
111	SLU 5	-2	677	3935	-26.89	-1.14	0
111	SLU 6	-1	478	3933	-17.7	-0.49	0
111	SLU 7	-1	607	3987	-23.39	-0.89	0
111	SLU 8	-1	473	3893	-17.54	-0.48	0
111	SLU 9	-1	602	3947	-23.24	-0.88	0
111	SLU 10	-2	722	4423	-28.4	-1.19	0
111	SLU 11	-1	523	4420	-19.21	-0.54	0
111	SLU 12	-2	653	4474	-24.9	-0.94	0
111	SLU 13	-2	734	4471	-28.54	-1.2	0
111	SLU 14	-1	535	4468	-19.34	-0.55	0
111	SLU 15	-2	664	4522	-25.04	-0.95	0
111	SLU 16	-1	530	4429	-19.18	-0.54	0
111	SLU 17	-2	659	4483	-24.88	-0.95	0
111	SLU 18	-1	532	4562	-19.61	-0.55	0
111	SLU 19	-2	661	4616	-25.31	-0.95	0
111	SLU 20	-1	543	4610	-19.75	-0.56	0
111	SLU 21	-2	672	4664	-25.45	-0.96	0
111	SLU 22	-1	509	4289	-18.88	-0.52	0
111	SLU 23	-2	724	4379	-28.37	-1.19	0
111	SLU 24	-1	525	4377	-19.17	-0.53	0
111	SLU 25	-2	654	4431	-24.87	-0.94	0
111	SLU 26	-2	735	4427	-28.5	-1.2	0
111	SLU 27	-1	536	4425	-19.31	-0.54	0
111	SLU 28	-2	665	4479	-25	-0.95	0
111	SLU 29	-1	531	4385	-19.15	-0.54	0
111	SLU 30	-2	660	4439	-24.84	-0.94	0
111	SLU 31	-2	781	4915	-30.01	-1.25	0
111	SLU 32	-1	582	4913	-20.82	-0.6	0
111	SLU 33	-2	711	4967	-26.51	-1	0
111	SLU 34	-2	792	4963	-30.15	-1.26	0
111	SLU 35	-1	593	4961	-20.95	-0.61	0
111	SLU 36	-2	723	5015	-26.65	-1.01	0
111	SLU 37	-1	589	4921	-20.79	-0.6	0
111	SLU 38	-2	718	4975	-26.49	-1	0
111	SLU 39	-1	590	5054	-21.22	-0.61	0
111	SLU 40	-2	719	5108	-26.92	-1.01	0
111	SLU 41	-1	602	5102	-21.36	-0.62	0
111	SLU 42	-2	731	5156	-27.05	-1.02	0
111	SLU 43	-1	565	4767	-21.9	-0.58	0
111	SLU 44	-2	780	4858	-31.39	-1.25	0
111	SLU 45	-1	581	4855	-22.19	-0.59	0
111	SLU 46	-2	710	4909	-27.89	-1	0
111	SLU 47	-2	791	4906	-31.52	-1.26	0
111	SLU 48	-1	593	4903	-22.33	-0.61	0
111	SLU 49	-2	722	4957	-28.02	-1.01	0
111	SLU 50	-1	588	4863	-22.17	-0.6	0
111	SLU 51	-2	717	4918	-27.86	-1	0
111	SLU 52	-2	837	5393	-33.03	-1.31	0
111	SLU 53	-1	638	5391	-23.83	-0.66	0
111	SLU 54	-2	767	5445	-29.53	-1.06	0
111	SLU 55	-2	849	5441	-33.17	-1.32	0
111	SLU 56	-1	650	5439	-23.97	-0.67	0
111	SLU 57	-2	779	5493	-29.67	-1.07	0
111	SLU 58	-1	645	5399	-23.81	-0.66	0
111	SLU 59	-2	774	5453	-29.51	-1.06	0
111	SLU 60	-1	647	5533	-24.24	-0.67	0
111	SLU 61	-2	776	5587	-29.94	-1.07	0
111	SLU 62	-1	658	5581	-24.38	-0.68	0
111	SLU 63	-2	787	5635	-30.07	-1.08	0
111	SLU 64	-1	623	5260	-23.51	-0.64	0
111	SLU 65	-2	839	5350	-32.99	-1.31	0
111	SLU 66	-1	640	5347	-23.8	-0.65	0

Nodo	Cont.	Reazione a traslazione			Reazione a rotazione		
Ind.	N.br.	x	y	z	x	y	z
111	SLU 67	-2	769	5401	-29.5	-1.05	0
111	SLU 68	-2	850	5398	-33.13	-1.32	0
111	SLU 69	-1	651	5395	-23.94	-0.66	0
111	SLU 70	-2	780	5449	-29.63	-1.07	0
111	SLU 71	-1	646	5356	-23.78	-0.66	0
111	SLU 72	-2	775	5410	-29.47	-1.06	0
111	SLU 73	-2	896	5885	-34.64	-1.37	0
111	SLU 74	-1	697	5883	-25.44	-0.71	0
111	SLU 75	-2	826	5937	-31.14	-1.12	0
111	SLU 76	-2	907	5933	-34.77	-1.38	0
111	SLU 77	-1	708	5931	-25.58	-0.72	0
111	SLU 78	-2	837	5985	-31.28	-1.13	0
111	SLU 79	-1	703	5891	-25.42	-0.72	0
111	SLU 80	-2	833	5945	-31.12	-1.12	0
111	SLU 81	-1	705	6025	-25.85	-0.72	0
111	SLU 82	-2	834	6079	-31.55	-1.13	0
111	SLU 83	-1	717	6073	-25.99	-0.73	0
111	SLU 84	-2	846	6127	-31.68	-1.14	0
111	SLE RA 1	-1	467	3938	-17.73	-0.48	0
111	SLE RA 2	-1	610	3998	-24.05	-0.92	0
111	SLE RA 3	-1	478	3996	-17.92	-0.49	0
111	SLE RA 4	-1	564	4032	-21.72	-0.76	0
111	SLE RA 5	-1	618	4030	-24.14	-0.93	0
111	SLE RA 6	-1	485	4028	-18.02	-0.49	0
111	SLE RA 7	-1	571	4064	-21.81	-0.76	0
111	SLE RA 8	-1	482	4002	-17.91	-0.49	0
111	SLE RA 9	-1	568	4038	-21.71	-0.76	0
111	SLE RA 10	-2	648	4355	-25.15	-0.97	0
111	SLE RA 11	-1	516	4353	-19.02	-0.53	0
111	SLE RA 12	-1	602	4389	-22.82	-0.8	0
111	SLE RA 13	-2	656	4387	-25.24	-0.97	0
111	SLE RA 14	-1	523	4385	-19.11	-0.54	0
111	SLE RA 15	-1	609	4421	-22.91	-0.8	0
111	SLE RA 16	-1	520	4359	-19.01	-0.53	0
111	SLE RA 17	-1	606	4395	-22.8	-0.8	0
111	SLE RA 18	-1	521	4448	-19.29	-0.54	0
111	SLE RA 19	-1	607	4484	-23.09	-0.8	0
111	SLE RA 20	-1	529	4480	-19.38	-0.54	0
111	SLE RA 21	-1	615	4516	-23.18	-0.81	0
111	SLE FR 1	-1	467	3938	-17.73	-0.48	0
111	SLE FR 2	-1	495	3950	-18.99	-0.57	0
111	SLE FR 3	-1	470	3950	-17.76	-0.48	0
111	SLE FR 4	-1	512	4103	-19.46	-0.58	0
111	SLE FR 5	-1	486	4103	-18.23	-0.5	0
111	SLE FR 6	-1	494	4193	-18.51	-0.51	0
111	SLE QP 1	-1	467	3938	-17.73	-0.48	0
111	SLE QP 2	-1	483	4091	-18.2	-0.49	0
111	SLD 1	-5	838	4310	-34.07	3.22	-0.01
111	SLD 2	-5	838	4310	-34.07	3.22	-0.01
111	SLD 3	-4	434	4003	-15.93	4.54	-0.01
111	SLD 4	-4	434	4003	-15.93	4.54	-0.01
111	SLD 5	-5	1201	4621	-50.47	-1.38	-0.01
111	SLD 6	-5	1201	4621	-50.47	-1.38	-0.01
111	SLD 7	1	-143	3599	10	3.02	0
111	SLD 8	1	-143	3599	10	3.02	0
111	SLD 9	-3	1109	4582	-46.39	-4.01	0
111	SLD 10	-3	1109	4582	-46.39	-4.01	0
111	SLD 11	3	-235	3560	14.08	0.4	0
111	SLD 12	3	-235	3560	14.08	0.4	0
111	SLD 13	2	532	4178	-20.47	-5.53	0.01
111	SLD 14	2	532	4178	-20.47	-5.53	0.01
111	SLD 15	3	128	3872	-2.32	-4.21	0.01
111	SLD 16	3	128	3872	-2.32	-4.21	0.01
111	SLV 1	-11	1332	4609	-56.24	8.31	-0.02
111	SLV 2	-11	1332	4609	-56.24	8.31	-0.02
111	SLV 3	-7	365	3884	-12.66	11.63	-0.02
111	SLV 4	-7	365	3884	-12.66	11.63	-0.02
111	SLV 5	-10	2204	5345	-95.7	-2.89	-0.01
111	SLV 6	-10	2204	5345	-95.7	-2.89	-0.01
111	SLV 7	3	-1019	2930	49.55	8.19	0
111	SLV 8	3	-1019	2930	49.55	8.19	0
111	SLV 9	-5	1985	5251	-85.95	-9.17	0
111	SLV 10	-5	1985	5251	-85.95	-9.17	0
111	SLV 11	8	-1238	2837	59.31	1.91	0.01
111	SLV 12	8	-1238	2837	59.31	1.91	0.01
111	SLV 13	5	601	4297	-23.73	-12.62	0.02
111	SLV 14	5	601	4297	-23.73	-12.62	0.02
111	SLV 15	10	-366	3573	19.85	-9.3	0.02
111	SLV 16	10	-366	3573	19.85	-9.3	0.02
112	SLU 1	3	905	6267	-25.82	1.78	0
112	SLU 2	8	935	6409	-27.84	5.76	0
112	SLU 3	3	932	6428	-26.67	1.84	0
112	SLU 4	6	951	6513	-27.89	4.23	0
112	SLU 5	8	950	6500	-28.32	5.79	0
112	SLU 6	3	948	6519	-27.16	1.87	0
112	SLU 7	6	966	6604	-28.37	4.26	0
112	SLU 8	3	935	6449	-26.79	1.84	0
112	SLU 9	6	953	6534	-28	4.23	0
112	SLU 10	8	1057	7195	-31.1	6.02	0
112	SLU 11	4	1054	7214	-29.94	2.1	0

Nodo	Cont.	Reazione a traslazione			Reazione a rotazione		
Ind.	N.br.	x	y	z	x	y	z
112	SLU 12	7	1072	7299	-31.15	4.49	0
112	SLU 13	9	1072	7286	-31.58	6.05	0
112	SLU 14	4	1069	7305	-30.42	2.13	0
112	SLU 15	7	1087	7390	-31.64	4.52	0
112	SLU 16	4	1056	7235	-30.05	2.1	0
112	SLU 17	7	1075	7320	-31.26	4.49	0
112	SLU 18	4	1078	7390	-30.47	2.15	0
112	SLU 19	7	1097	7475	-31.69	4.54	0
112	SLU 20	4	1093	7481	-30.96	2.18	0
112	SLU 21	7	1112	7566	-32.17	4.57	0
112	SLU 22	4	1024	7011	-29.14	2.04	0
112	SLU 23	8	1055	7153	-31.16	6.02	0
112	SLU 24	4	1052	7172	-30	2.1	0
112	SLU 25	7	1070	7257	-31.21	4.49	0
112	SLU 26	9	1070	7244	-31.65	6.05	0
112	SLU 27	4	1067	7263	-30.49	2.13	0
112	SLU 28	7	1085	7348	-31.7	4.52	0
112	SLU 29	4	1054	7193	-30.11	2.1	0
112	SLU 30	7	1073	7278	-31.33	4.49	0
112	SLU 31	9	1176	7940	-34.42	6.28	0
112	SLU 32	4	1174	7959	-33.26	2.36	0
112	SLU 33	7	1192	8044	-34.47	4.75	0
112	SLU 34	9	1191	8031	-34.91	6.31	0
112	SLU 35	4	1189	8050	-33.75	2.39	0
112	SLU 36	7	1207	8135	-34.96	4.78	0
112	SLU 37	4	1176	7980	-33.38	2.36	0
112	SLU 38	7	1194	8065	-34.59	4.75	0
112	SLU 39	4	1198	8135	-33.8	2.41	0
112	SLU 40	7	1216	8220	-35.01	4.8	0
112	SLU 41	4	1213	8226	-34.29	2.44	0
112	SLU 42	7	1231	8311	-35.5	4.83	0
112	SLU 43	4	1135	7891	-32.42	2.23	0
112	SLU 44	9	1166	8033	-34.44	6.21	0
112	SLU 45	4	1163	8053	-33.28	2.29	0
112	SLU 46	7	1181	8138	-34.49	4.68	0
112	SLU 47	9	1181	8124	-34.93	6.24	0
112	SLU 48	4	1178	8143	-33.76	2.32	0
112	SLU 49	7	1196	8229	-34.98	4.7	0
112	SLU 50	4	1165	8073	-33.39	2.29	0
112	SLU 51	7	1184	8159	-34.61	4.68	0
112	SLU 52	9	1287	8820	-37.7	6.47	0
112	SLU 53	5	1284	8839	-36.54	2.55	0
112	SLU 54	8	1303	8924	-37.75	4.93	0
112	SLU 55	9	1302	8911	-38.19	6.5	0
112	SLU 56	5	1300	8930	-37.03	2.57	0
112	SLU 57	8	1318	9015	-38.24	4.96	0
112	SLU 58	5	1287	8860	-36.65	2.55	0
112	SLU 59	8	1305	8945	-37.87	4.93	0
112	SLU 60	5	1309	9015	-37.08	2.6	0
112	SLU 61	8	1327	9100	-38.29	4.99	0
112	SLU 62	5	1324	9106	-37.56	2.63	0
112	SLU 63	8	1342	9191	-38.78	5.02	0
112	SLU 64	5	1255	8636	-35.75	2.49	0
112	SLU 65	9	1285	8778	-37.77	6.47	0
112	SLU 66	5	1282	8797	-36.6	2.54	0
112	SLU 67	8	1301	8882	-37.82	4.93	0
112	SLU 68	9	1300	8869	-38.25	6.5	0
112	SLU 69	5	1298	8888	-37.09	2.57	0
112	SLU 70	8	1316	8973	-38.3	4.96	0
112	SLU 71	5	1285	8818	-36.72	2.55	0
112	SLU 72	8	1303	8903	-37.93	4.93	0
112	SLU 73	10	1407	9564	-41.03	6.73	0
112	SLU 74	5	1404	9583	-39.87	2.8	0
112	SLU 75	8	1422	9669	-41.08	5.19	0
112	SLU 76	10	1422	9655	-41.52	6.76	0
112	SLU 77	5	1419	9674	-40.35	2.83	0
112	SLU 78	8	1437	9760	-41.57	5.22	0
112	SLU 79	5	1406	9604	-39.98	2.8	0
112	SLU 80	8	1425	9690	-41.19	5.19	0
112	SLU 81	5	1428	9759	-40.4	2.86	0
112	SLU 82	8	1447	9845	-41.62	5.25	0
112	SLU 83	5	1443	9850	-40.89	2.89	0
112	SLU 84	8	1462	9936	-42.1	5.27	0
112	SLE RA 1	3	939	6479	-26.77	1.86	0
112	SLE RA 2	7	959	6574	-28.11	4.51	0
112	SLE RA 3	3	957	6587	-27.34	1.89	0
112	SLE RA 4	5	970	6644	-28.15	3.49	0
112	SLE RA 5	7	969	6635	-28.44	4.53	0
112	SLE RA 6	4	967	6647	-27.66	1.91	0
112	SLE RA 7	5	980	6704	-28.47	3.51	0
112	SLE RA 8	3	959	6601	-27.41	1.89	0
112	SLE RA 9	5	971	6657	-28.22	3.49	0
112	SLE RA 10	7	1040	7098	-30.29	4.68	0
112	SLE RA 11	4	1038	7111	-29.51	2.07	0
112	SLE RA 12	6	1051	7168	-30.32	3.66	0
112	SLE RA 13	7	1050	7159	-30.61	4.7	0
112	SLE RA 14	4	1048	7172	-29.84	2.09	0
112	SLE RA 15	6	1061	7229	-30.65	3.68	0
112	SLE RA 16	4	1040	7125	-29.59	2.07	0
112	SLE RA 17	6	1052	7182	-30.4	3.66	0

Nodo	Cont.	Reazione a traslazione			Reazione a rotazione		
Ind.	N.br.	x	y	z	x	y	z
112	SLE RA 18	4	1055	7228	-29.87	2.1	0
112	SLE RA 19	6	1067	7285	-30.68	3.7	0
112	SLE RA 20	4	1065	7289	-30.2	2.12	0
112	SLE RA 21	6	1077	7346	-31	3.71	0
112	SLE FR 1	3	939	6479	-26.77	1.86	0
112	SLE FR 2	4	943	6498	-27.04	2.39	0
112	SLE FR 3	3	943	6504	-26.9	1.86	0
112	SLE FR 4	4	978	6723	-27.97	2.46	0
112	SLE FR 5	4	978	6728	-27.83	1.94	0
112	SLE FR 6	4	997	6854	-28.32	1.98	0
112	SLE QP 1	3	939	6479	-26.77	1.86	0
112	SLE QP 2	4	974	6704	-27.7	1.93	0
112	SLD 1	21	985	5470	-31.68	17.7	-0.01
112	SLD 2	21	985	5470	-31.68	17.7	-0.01
112	SLD 3	13	641	4775	-15.26	12.7	-0.01
112	SLD 4	13	641	4775	-15.26	12.7	-0.01
112	SLD 5	20	1499	7389	-53.81	14.24	0
112	SLD 6	20	1499	7389	-53.81	14.24	0
112	SLD 7	-5	352	5070	0.95	-2.42	-0.01
112	SLD 8	-5	352	5070	0.95	-2.42	-0.01
112	SLD 9	12	1595	8338	-56.34	6.28	0.01
112	SLD 10	12	1595	8338	-56.34	6.28	0.01
112	SLD 11	-13	449	6019	-1.59	-10.38	0
112	SLD 12	-13	449	6019	-1.59	-10.38	0
112	SLD 13	-6	1306	8634	-40.14	-8.84	0.01
112	SLD 14	-6	1306	8634	-40.14	-8.84	0.01
112	SLD 15	-14	962	7938	-23.71	-13.84	0.01
112	SLD 16	-14	962	7938	-23.71	-13.84	0.01
112	SLV 1	45	997	3823	-36.84	39.9	-0.02
112	SLV 2	45	997	3823	-36.84	39.9	-0.02
112	SLV 3	27	196	2181	1.41	27.53	-0.03
112	SLV 4	27	196	2181	1.41	27.53	-0.03
112	SLV 5	44	2196	8330	-88.45	32.07	0.01
112	SLV 6	44	2196	8330	-88.45	32.07	0.01
112	SLV 7	-18	-474	2857	39.05	-9.14	-0.02
112	SLV 8	-18	-474	2857	39.05	-9.14	-0.02
112	SLV 9	25	2422	10551	-94.44	13	0.02
112	SLV 10	25	2422	10551	-94.44	13	0.02
112	SLV 11	-37	-248	5079	33.06	-28.21	-0.01
112	SLV 12	-37	-248	5079	33.06	-28.21	-0.01
112	SLV 13	-19	1751	11227	-56.81	-23.68	0.03
112	SLV 14	-19	1751	11227	-56.81	-23.68	0.03
112	SLV 15	-38	950	9586	-18.56	-36.04	0.02
112	SLV 16	-38	950	9586	-18.56	-36.04	0.02
113	SLU 1	2	-103	449	4.16	1.02	-0.02
113	SLU 2	2	-104	448	4.24	1.06	-0.02
113	SLU 3	2	-106	446	4.33	1.04	-0.02
113	SLU 4	2	-107	446	4.38	1.06	-0.02
113	SLU 5	2	-107	446	4.35	1.07	-0.02
113	SLU 6	2	-109	444	4.45	1.05	-0.02
113	SLU 7	2	-110	443	4.49	1.07	-0.02
113	SLU 8	2	-108	445	4.4	1.04	-0.02
113	SLU 9	2	-109	444	4.44	1.06	-0.02
113	SLU 10	2	-142	515	5.55	0.9	-0.02
113	SLU 11	2	-144	514	5.65	0.88	-0.02
113	SLU 12	2	-145	513	5.69	0.9	-0.02
113	SLU 13	2	-144	513	5.67	0.9	-0.02
113	SLU 14	2	-146	511	5.77	0.89	-0.02
113	SLU 15	2	-147	511	5.81	0.91	-0.02
113	SLU 16	2	-145	512	5.71	0.88	-0.02
113	SLU 17	2	-146	512	5.76	0.9	-0.02
113	SLU 18	2	-156	545	6.05	0.79	-0.03
113	SLU 19	2	-157	545	6.09	0.81	-0.03
113	SLU 20	2	-159	543	6.16	0.8	-0.03
113	SLU 21	2	-160	543	6.21	0.82	-0.03
113	SLU 22	2	-124	458	5.03	1.09	-0.02
113	SLU 23	2	-126	457	5.1	1.12	-0.02
113	SLU 24	2	-128	455	5.2	1.1	-0.02
113	SLU 25	2	-129	454	5.24	1.13	-0.02
113	SLU 26	2	-129	455	5.22	1.13	-0.02
113	SLU 27	2	-131	453	5.31	1.11	-0.02
113	SLU 28	2	-132	452	5.36	1.13	-0.02
113	SLU 29	2	-130	454	5.26	1.1	-0.02
113	SLU 30	2	-131	453	5.3	1.12	-0.02
113	SLU 31	2	-163	524	6.42	0.96	-0.03
113	SLU 32	2	-166	522	6.51	0.94	-0.03
113	SLU 33	2	-167	522	6.56	0.96	-0.03
113	SLU 34	2	-166	522	6.53	0.97	-0.03
113	SLU 35	2	-168	520	6.63	0.95	-0.03
113	SLU 36	2	-169	520	6.67	0.97	-0.03
113	SLU 37	2	-167	521	6.58	0.94	-0.03
113	SLU 38	2	-168	520	6.62	0.96	-0.03
113	SLU 39	2	-178	554	6.91	0.85	-0.03
113	SLU 40	2	-179	553	6.95	0.87	-0.03
113	SLU 41	2	-180	552	7.03	0.86	-0.03
113	SLU 42	2	-181	551	7.07	0.88	-0.03
113	SLU 43	2	-126	581	5.12	1.31	-0.02
113	SLU 44	2	-127	580	5.19	1.34	-0.02
113	SLU 45	2	-130	578	5.28	1.33	-0.02
113	SLU 46	2	-131	577	5.33	1.35	-0.02

Nodo	Cont.	Reazione a traslazione			Reazione a rotazione		
Ind.	N.br.	x	y	z	x	y	z
113	SLU 47	2	-130	578	5.3	1.35	-0.02
113	SLU 48	2	-132	576	5.4	1.34	-0.02
113	SLU 49	2	-133	575	5.44	1.36	-0.02
113	SLU 50	2	-131	577	5.35	1.33	-0.02
113	SLU 51	2	-132	576	5.39	1.35	-0.02
113	SLU 52	2	-165	647	6.51	1.18	-0.03
113	SLU 53	2	-167	645	6.6	1.17	-0.03
113	SLU 54	2	-168	645	6.65	1.19	-0.03
113	SLU 55	2	-167	645	6.62	1.19	-0.03
113	SLU 56	2	-170	643	6.72	1.17	-0.03
113	SLU 57	2	-171	642	6.76	1.2	-0.03
113	SLU 58	2	-169	644	6.67	1.16	-0.03
113	SLU 59	2	-170	643	6.71	1.18	-0.03
113	SLU 60	2	-179	677	7	1.08	-0.03
113	SLU 61	2	-180	676	7.04	1.1	-0.03
113	SLU 62	2	-182	675	7.11	1.08	-0.03
113	SLU 63	2	-183	674	7.16	1.11	-0.03
113	SLU 64	2	-148	590	5.98	1.37	-0.02
113	SLU 65	2	-149	589	6.05	1.41	-0.02
113	SLU 66	2	-152	587	6.15	1.39	-0.02
113	SLU 67	2	-153	586	6.19	1.41	-0.02
113	SLU 68	2	-152	587	6.17	1.41	-0.02
113	SLU 69	2	-154	585	6.27	1.4	-0.02
113	SLU 70	2	-155	584	6.31	1.42	-0.02
113	SLU 71	2	-153	586	6.21	1.39	-0.02
113	SLU 72	2	-154	585	6.26	1.41	-0.02
113	SLU 73	2	-187	656	7.37	1.24	-0.03
113	SLU 74	2	-189	654	7.47	1.23	-0.03
113	SLU 75	2	-190	653	7.51	1.25	-0.03
113	SLU 76	2	-189	654	7.49	1.25	-0.03
113	SLU 77	2	-192	652	7.58	1.24	-0.03
113	SLU 78	2	-193	651	7.63	1.26	-0.03
113	SLU 79	2	-190	653	7.53	1.23	-0.03
113	SLU 80	2	-191	652	7.57	1.25	-0.03
113	SLU 81	2	-201	686	7.86	1.14	-0.03
113	SLU 82	2	-202	685	7.91	1.16	-0.03
113	SLU 83	2	-204	684	7.98	1.15	-0.03
113	SLU 84	2	-205	683	8.02	1.17	-0.03
113	SLE RA 1	2	-109	452	4.41	1.04	-0.02
113	SLE RA 2	2	-110	451	4.46	1.06	-0.02
113	SLE RA 3	2	-111	450	4.52	1.05	-0.02
113	SLE RA 4	2	-112	449	4.55	1.07	-0.02
113	SLE RA 5	2	-112	450	4.54	1.07	-0.02
113	SLE RA 6	2	-113	448	4.6	1.06	-0.02
113	SLE RA 7	2	-114	448	4.63	1.07	-0.02
113	SLE RA 8	2	-112	449	4.57	1.05	-0.02
113	SLE RA 9	2	-113	448	4.59	1.07	-0.02
113	SLE RA 10	2	-135	496	5.34	0.96	-0.02
113	SLE RA 11	2	-136	495	5.4	0.95	-0.02
113	SLE RA 12	2	-137	494	5.43	0.96	-0.02
113	SLE RA 13	2	-137	494	5.41	0.96	-0.02
113	SLE RA 14	2	-138	493	5.48	0.95	-0.02
113	SLE RA 15	2	-139	493	5.51	0.97	-0.02
113	SLE RA 16	2	-137	494	5.44	0.94	-0.02
113	SLE RA 17	2	-138	493	5.47	0.96	-0.02
113	SLE RA 18	2	-144	516	5.67	0.89	-0.02
113	SLE RA 19	2	-145	515	5.69	0.9	-0.02
113	SLE RA 20	2	-146	514	5.74	0.89	-0.02
113	SLE RA 21	2	-147	514	5.77	0.91	-0.02
113	SLE FR 1	2	-109	452	4.41	1.04	-0.02
113	SLE FR 2	2	-109	452	4.42	1.05	-0.02
113	SLE FR 3	2	-109	451	4.44	1.04	-0.02
113	SLE FR 4	2	-120	471	4.8	1	-0.02
113	SLE FR 5	2	-120	470	4.82	1	-0.02
113	SLE FR 6	2	-127	484	5.04	0.96	-0.02
113	SLE QP 1	2	-109	452	4.41	1.04	-0.02
113	SLE QP 2	2	-119	471	4.79	0.99	-0.02
113	SLD 1	11	-88	465	3.39	8.16	-0.09
113	SLD 2	11	-88	465	3.39	8.16	-0.09
113	SLD 3	12	-173	449	7.19	8.95	-0.08
113	SLD 4	12	-173	449	7.19	8.95	-0.08
113	SLD 5	3	19	494	-1.4	1.94	-0.05
113	SLD 6	3	19	494	-1.4	1.94	-0.05
113	SLD 7	6	-265	440	11.28	4.59	-0.03
113	SLD 8	6	-265	440	11.28	4.59	-0.03
113	SLD 9	-3	26	502	-1.7	-2.6	-0.01
113	SLD 10	-3	26	502	-1.7	-2.6	-0.01
113	SLD 11	1	-258	448	10.98	0.05	0.01
113	SLD 12	1	-258	448	10.98	0.05	0.01
113	SLD 13	-8	-65	493	2.38	-6.96	0.05
113	SLD 14	-8	-65	493	2.38	-6.96	0.05
113	SLD 15	-7	-151	477	6.19	-6.17	0.05
113	SLD 16	-7	-151	477	6.19	-6.17	0.05
113	SLV 1	23	-46	457	1.51	17.78	-0.19
113	SLV 2	23	-46	457	1.51	17.78	-0.19
113	SLV 3	25	-246	419	10.42	19.65	-0.17
113	SLV 4	25	-246	419	10.42	19.65	-0.17
113	SLV 5	4	205	524	-9.71	3.19	-0.09
113	SLV 6	4	205	524	-9.71	3.19	-0.09
113	SLV 7	13	-460	398	19.99	9.43	-0.04

Nodo	Cont.	Reazione a traslazione			Reazione a rotazione		
Ind.	N.br.	x	y	z	x	y	z
113	SLV 8	13	-460	398	19.99	9.43	-0.04
113	SLV 9	-9	221	544	-10.42	-7.44	0
113	SLV 10	-9	221	544	-10.42	-7.44	0
113	SLV 11	-1	-444	418	19.29	-1.2	0.06
113	SLV 12	-1	-444	418	19.29	-1.2	0.06
113	SLV 13	-22	7	523	-0.84	-17.66	0.13
113	SLV 14	-22	7	523	-0.84	-17.66	0.13
113	SLV 15	-19	-193	485	8.07	-15.79	0.15
113	SLV 16	-19	-193	485	8.07	-15.79	0.15
114	SLU 1	20	-194	5206	7.42	13.63	-0.18
114	SLU 2	20	-286	5249	11.33	13.89	-0.19
114	SLU 3	20	-197	5336	7.55	14.04	-0.19
114	SLU 4	21	-252	5361	9.89	14.19	-0.19
114	SLU 5	21	-288	5333	11.44	14.16	-0.19
114	SLU 6	21	-199	5420	7.65	14.31	-0.19
114	SLU 7	21	-254	5446	10	14.47	-0.19
114	SLU 8	21	-199	5375	7.64	14.17	-0.19
114	SLU 9	21	-254	5400	9.98	14.33	-0.19
114	SLU 10	25	-323	6008	12.78	17.47	-0.25
114	SLU 11	25	-234	6095	8.99	17.63	-0.25
114	SLU 12	25	-289	6121	11.34	17.78	-0.25
114	SLU 13	25	-325	6092	12.89	17.75	-0.25
114	SLU 14	26	-236	6179	9.1	17.9	-0.25
114	SLU 15	26	-291	6205	11.45	18.05	-0.25
114	SLU 16	25	-236	6134	9.09	17.76	-0.25
114	SLU 17	26	-291	6159	11.43	17.91	-0.25
114	SLU 18	26	-247	6291	9.49	18.75	-0.27
114	SLU 19	27	-302	6317	11.84	18.91	-0.27
114	SLU 20	27	-250	6375	9.6	19.02	-0.27
114	SLU 21	27	-305	6401	11.95	19.18	-0.27
114	SLU 22	23	-218	5829	8.43	15.7	-0.21
114	SLU 23	23	-310	5872	12.34	15.96	-0.22
114	SLU 24	23	-221	5959	8.55	16.11	-0.22
114	SLU 25	24	-276	5984	10.9	16.27	-0.22
114	SLU 26	24	-312	5956	12.45	16.24	-0.22
114	SLU 27	24	-223	6043	8.66	16.39	-0.22
114	SLU 28	24	-278	6068	11.01	16.54	-0.22
114	SLU 29	24	-223	5998	8.65	16.25	-0.22
114	SLU 30	24	-278	6023	10.99	16.4	-0.22
114	SLU 31	28	-347	6631	13.79	19.55	-0.28
114	SLU 32	28	-258	6718	10	19.7	-0.28
114	SLU 33	28	-313	6744	12.35	19.86	-0.28
114	SLU 34	28	-349	6715	13.9	19.82	-0.28
114	SLU 35	29	-260	6802	10.11	19.97	-0.28
114	SLU 36	29	-315	6828	12.46	20.13	-0.28
114	SLU 37	28	-260	6757	10.1	19.83	-0.28
114	SLU 38	28	-315	6782	12.44	19.99	-0.28
114	SLU 39	29	-272	6914	10.5	20.83	-0.3
114	SLU 40	30	-327	6940	12.85	20.98	-0.3
114	SLU 41	30	-274	6998	10.61	21.1	-0.3
114	SLU 42	30	-329	7024	12.96	21.25	-0.31
114	SLU 43	25	-244	6555	9.3	17	-0.23
114	SLU 44	25	-336	6598	13.21	17.26	-0.23
114	SLU 45	25	-247	6684	9.43	17.41	-0.23
114	SLU 46	26	-302	6710	11.77	17.57	-0.23
114	SLU 47	26	-338	6682	13.32	17.53	-0.23
114	SLU 48	26	-249	6768	9.53	17.69	-0.23
114	SLU 49	26	-304	6794	11.88	17.84	-0.24
114	SLU 50	26	-249	6723	9.52	17.55	-0.23
114	SLU 51	26	-304	6749	11.87	17.7	-0.23
114	SLU 52	30	-373	7357	14.66	20.85	-0.29
114	SLU 53	30	-284	7443	10.87	21	-0.29
114	SLU 54	30	-339	7469	13.22	21.16	-0.29
114	SLU 55	30	-375	7441	14.77	21.12	-0.29
114	SLU 56	30	-286	7527	10.98	21.27	-0.29
114	SLU 57	31	-341	7553	13.33	21.43	-0.3
114	SLU 58	30	-286	7482	10.97	21.13	-0.29
114	SLU 59	30	-341	7508	13.31	21.29	-0.29
114	SLU 60	31	-298	7639	11.37	22.13	-0.31
114	SLU 61	32	-353	7665	13.72	22.28	-0.31
114	SLU 62	32	-300	7723	11.48	22.4	-0.31
114	SLU 63	32	-355	7749	13.83	22.55	-0.32
114	SLU 64	28	-269	7178	10.31	19.08	-0.26
114	SLU 65	28	-360	7220	14.22	19.34	-0.26
114	SLU 66	28	-271	7307	10.43	19.49	-0.26
114	SLU 67	29	-326	7333	12.78	19.65	-0.26
114	SLU 68	28	-362	7305	14.33	19.61	-0.26
114	SLU 69	29	-273	7391	10.54	19.76	-0.26
114	SLU 70	29	-328	7417	12.89	19.92	-0.27
114	SLU 71	29	-273	7346	10.53	19.62	-0.26
114	SLU 72	29	-328	7372	12.87	19.78	-0.27
114	SLU 73	33	-397	7980	15.67	22.92	-0.32
114	SLU 74	33	-308	8066	11.88	23.08	-0.32
114	SLU 75	33	-363	8092	14.23	23.23	-0.32
114	SLU 76	33	-399	8064	15.78	23.2	-0.32
114	SLU 77	33	-310	8150	11.99	23.35	-0.32
114	SLU 78	34	-365	8176	14.34	23.51	-0.33
114	SLU 79	33	-310	8105	11.98	23.21	-0.32
114	SLU 80	33	-365	8131	14.32	23.37	-0.33
114	SLU 81	34	-322	8262	12.38	24.2	-0.34

Nodo	Cont.	Reazione a traslazione			Reazione a rotazione		
Ind.	N.br.	x	y	z	x	y	z
114	SLU 82	35	-377	8288	14.73	24.36	-0.35
114	SLU 83	35	-324	8346	12.49	24.47	-0.35
114	SLU 84	35	-379	8372	14.84	24.63	-0.35
114	SLE RA 1	21	-201	5384	7.71	14.22	-0.19
114	SLE RA 2	21	-262	5413	10.32	14.39	-0.19
114	SLE RA 3	21	-203	5471	7.79	14.49	-0.19
114	SLE RA 4	21	-239	5488	9.36	14.6	-0.2
114	SLE RA 5	21	-264	5469	10.39	14.57	-0.2
114	SLE RA 6	21	-204	5527	7.86	14.68	-0.2
114	SLE RA 7	22	-241	5544	9.43	14.78	-0.2
114	SLE RA 8	21	-204	5497	7.85	14.58	-0.19
114	SLE RA 9	21	-241	5514	9.42	14.69	-0.2
114	SLE RA 10	24	-287	5919	11.28	16.78	-0.23
114	SLE RA 11	24	-227	5977	8.76	16.89	-0.23
114	SLE RA 12	24	-264	5994	10.32	16.99	-0.24
114	SLE RA 13	24	-289	5975	11.36	16.97	-0.24
114	SLE RA 14	24	-229	6033	8.83	17.07	-0.24
114	SLE RA 15	25	-266	6050	10.4	17.17	-0.24
114	SLE RA 16	24	-229	6003	8.82	16.97	-0.23
114	SLE RA 17	24	-266	6020	10.38	17.08	-0.24
114	SLE RA 18	25	-237	6107	9.09	17.63	-0.25
114	SLE RA 19	25	-273	6125	10.65	17.74	-0.25
114	SLE RA 20	25	-238	6164	9.16	17.82	-0.25
114	SLE RA 21	26	-275	6181	10.73	17.92	-0.25
114	SLE FR 1	21	-201	5384	7.71	14.22	-0.19
114	SLE FR 2	21	-214	5390	8.23	14.25	-0.19
114	SLE FR 3	21	-202	5407	7.74	14.29	-0.19
114	SLE FR 4	22	-224	5607	8.64	15.28	-0.21
114	SLE FR 5	22	-212	5624	8.15	15.32	-0.21
114	SLE FR 6	23	-219	5746	8.4	15.93	-0.22
114	SLE QP 1	21	-201	5384	7.71	14.22	-0.19
114	SLE QP 2	22	-212	5601	8.12	15.24	-0.21
114	SLD 1	36	-149	5361	5.37	29.7	-0.43
114	SLD 2	36	-149	5361	5.37	29.7	-0.43
114	SLD 3	39	-552	5282	22.25	32.06	-0.46
114	SLD 4	39	-552	5282	22.25	32.06	-0.46
114	SLD 5	22	418	5648	-18.3	16.01	-0.22
114	SLD 6	22	418	5648	-18.3	16.01	-0.22
114	SLD 7	32	-925	5387	37.96	23.86	-0.34
114	SLD 8	32	-925	5387	37.96	23.86	-0.34
114	SLD 9	12	501	5816	-21.71	6.62	-0.08
114	SLD 10	12	501	5816	-21.71	6.62	-0.08
114	SLD 11	22	-842	5555	34.55	14.48	-0.2
114	SLD 12	22	-842	5555	34.55	14.48	-0.2
114	SLD 13	5	128	5920	-6	-1.57	0.05
114	SLD 14	5	128	5920	-6	-1.57	0.05
114	SLD 15	8	-275	5842	10.88	0.78	0.01
114	SLD 16	8	-275	5842	10.88	0.78	0.01
114	SLV 1	55	-64	5041	1.67	49.04	-0.72
114	SLV 2	55	-64	5041	1.67	49.04	-0.72
114	SLV 3	62	-1011	4851	41.34	54.72	-0.81
114	SLV 4	62	-1011	4851	41.34	54.72	-0.81
114	SLV 5	21	1268	5722	-53.97	16.78	-0.23
114	SLV 6	21	1268	5722	-53.97	16.78	-0.23
114	SLV 7	45	-1887	5087	78.25	35.69	-0.52
114	SLV 8	45	-1887	5087	78.25	35.69	-0.52
114	SLV 9	-1	1463	6116	-62	-5.21	0.11
114	SLV 10	-1	1463	6116	-62	-5.21	0.11
114	SLV 11	23	-1692	5480	70.22	13.71	-0.19
114	SLV 12	23	-1692	5480	70.22	13.71	-0.19
114	SLV 13	-18	587	6352	-25.09	-24.23	0.39
114	SLV 14	-18	587	6352	-25.09	-24.23	0.39
114	SLV 15	-11	-360	6161	14.57	-18.56	0.3
114	SLV 16	-11	-360	6161	14.57	-18.56	0.3
115	SLU 1	35	976	6432	-41.32	26.56	-0.22
115	SLU 2	30	1001	6512	-42.26	22.22	-0.19
115	SLU 3	36	1014	6588	-42.7	27.28	-0.22
115	SLU 4	33	1029	6636	-43.26	24.67	-0.21
115	SLU 5	30	1027	6596	-43.11	22.59	-0.19
115	SLU 6	36	1039	6671	-43.54	27.65	-0.23
115	SLU 7	33	1054	6720	-44.11	25.05	-0.21
115	SLU 8	36	1028	6599	-43.01	27.31	-0.22
115	SLU 9	33	1042	6648	-43.58	24.71	-0.21
115	SLU 10	35	1131	7286	-47.77	25.76	-0.22
115	SLU 11	40	1143	7362	-48.2	30.82	-0.25
115	SLU 12	37	1158	7410	-48.77	28.22	-0.24
115	SLU 13	35	1157	7370	-48.62	26.14	-0.22
115	SLU 14	41	1169	7446	-49.05	31.2	-0.26
115	SLU 15	38	1184	7494	-49.62	28.59	-0.24
115	SLU 16	40	1157	7373	-48.52	30.86	-0.25
115	SLU 17	37	1172	7422	-49.09	28.25	-0.24
115	SLU 18	41	1162	7538	-49.19	31.63	-0.26
115	SLU 19	38	1177	7586	-49.75	29.02	-0.24
115	SLU 20	42	1187	7621	-50.03	32	-0.26
115	SLU 21	39	1202	7670	-50.6	29.4	-0.25
115	SLU 22	39	1107	7173	-46.78	29.97	-0.25
115	SLU 23	34	1132	7254	-47.72	25.63	-0.22
115	SLU 24	40	1145	7329	-48.15	30.69	-0.25
115	SLU 25	37	1160	7378	-48.72	28.08	-0.23
115	SLU 26	35	1158	7338	-48.57	26	-0.22

Nodo	Cont.	Reazione a traslazione			Reazione a rotazione		
Ind.	N.br.	x	y	z	x	y	z
115	SLU 27	41	1170	7413	-49	31.06	-0.26
115	SLU 28	38	1185	7461	-49.57	28.46	-0.24
115	SLU 29	40	1159	7341	-48.47	30.72	-0.25
115	SLU 30	37	1174	7389	-49.04	28.12	-0.23
115	SLU 31	39	1262	8028	-53.23	29.17	-0.25
115	SLU 32	45	1275	8103	-53.66	34.23	-0.28
115	SLU 33	42	1289	8152	-54.23	31.63	-0.26
115	SLU 34	40	1288	8112	-54.08	29.55	-0.25
115	SLU 35	45	1300	8187	-54.51	34.61	-0.28
115	SLU 36	42	1315	8236	-55.08	32	-0.27
115	SLU 37	45	1289	8115	-53.98	34.27	-0.28
115	SLU 38	42	1303	8164	-54.55	31.66	-0.26
115	SLU 39	46	1293	8279	-54.64	35.04	-0.29
115	SLU 40	43	1308	8328	-55.21	32.43	-0.27
115	SLU 41	46	1318	8363	-55.49	35.41	-0.29
115	SLU 42	43	1333	8411	-56.06	32.81	-0.27
115	SLU 43	44	1224	8107	-51.84	33.36	-0.27
115	SLU 44	39	1249	8187	-52.79	29.02	-0.24
115	SLU 45	45	1262	8263	-53.22	34.07	-0.28
115	SLU 46	42	1276	8311	-53.79	31.47	-0.26
115	SLU 47	39	1275	8271	-53.63	29.39	-0.25
115	SLU 48	45	1287	8347	-54.07	34.45	-0.28
115	SLU 49	42	1302	8395	-54.63	31.84	-0.27
115	SLU 50	45	1276	8274	-53.54	34.11	-0.28
115	SLU 51	42	1290	8323	-54.1	31.5	-0.26
115	SLU 52	43	1379	8961	-58.29	32.56	-0.27
115	SLU 53	49	1391	9037	-58.73	37.62	-0.31
115	SLU 54	46	1406	9085	-59.29	35.01	-0.29
115	SLU 55	44	1404	9045	-59.14	32.94	-0.28
115	SLU 56	50	1417	9121	-59.58	38	-0.31
115	SLU 57	47	1432	9169	-60.14	35.39	-0.29
115	SLU 58	49	1405	9049	-59.05	37.66	-0.31
115	SLU 59	46	1420	9097	-59.61	35.05	-0.29
115	SLU 60	50	1410	9213	-59.71	38.43	-0.32
115	SLU 61	47	1424	9261	-60.28	35.82	-0.3
115	SLU 62	51	1435	9297	-60.56	38.8	-0.32
115	SLU 63	48	1450	9345	-61.12	36.19	-0.3
115	SLU 64	48	1355	8849	-57.3	36.77	-0.3
115	SLU 65	43	1380	8929	-58.24	32.43	-0.27
115	SLU 66	49	1393	9004	-58.68	37.49	-0.31
115	SLU 67	46	1407	9053	-59.24	34.88	-0.29
115	SLU 68	44	1406	9013	-59.09	32.8	-0.28
115	SLU 69	50	1418	9088	-59.52	37.86	-0.31
115	SLU 70	47	1433	9137	-60.09	35.25	-0.29
115	SLU 71	49	1407	9016	-58.99	37.52	-0.31
115	SLU 72	46	1421	9065	-59.56	34.91	-0.29
115	SLU 73	48	1510	9703	-63.75	35.97	-0.3
115	SLU 74	54	1522	9779	-64.18	41.03	-0.34
115	SLU 75	51	1537	9827	-64.75	38.43	-0.32
115	SLU 76	48	1535	9787	-64.6	36.35	-0.3
115	SLU 77	54	1548	9862	-65.03	41.41	-0.34
115	SLU 78	51	1563	9911	-65.6	38.8	-0.32
115	SLU 79	54	1536	9790	-64.5	41.07	-0.34
115	SLU 80	51	1551	9839	-65.07	38.46	-0.32
115	SLU 81	55	1541	9954	-65.17	41.84	-0.34
115	SLU 82	52	1555	10003	-65.73	39.23	-0.33
115	SLU 83	55	1566	10038	-66.02	42.21	-0.35
115	SLU 84	52	1581	10087	-66.58	39.61	-0.33
115	SLE RA 1	36	1014	6644	-42.88	27.54	-0.23
115	SLE RA 2	33	1030	6697	-43.51	24.64	-0.21
115	SLE RA 3	37	1039	6747	-43.8	28.01	-0.23
115	SLE RA 4	35	1048	6780	-44.17	26.27	-0.22
115	SLE RA 5	33	1047	6753	-44.07	24.89	-0.21
115	SLE RA 6	37	1056	6803	-44.36	28.26	-0.23
115	SLE RA 7	35	1066	6836	-44.74	26.52	-0.22
115	SLE RA 8	37	1048	6755	-44.01	28.04	-0.23
115	SLE RA 9	35	1058	6788	-44.39	26.3	-0.22
115	SLE RA 10	36	1117	7213	-47.18	27	-0.23
115	SLE RA 11	40	1125	7264	-47.47	30.38	-0.25
115	SLE RA 12	38	1135	7296	-47.85	28.64	-0.24
115	SLE RA 13	36	1134	7269	-47.74	27.25	-0.23
115	SLE RA 14	40	1142	7319	-48.03	30.63	-0.25
115	SLE RA 15	38	1152	7352	-48.41	28.89	-0.24
115	SLE RA 16	40	1134	7271	-47.68	30.4	-0.25
115	SLE RA 17	38	1144	7304	-48.06	28.66	-0.24
115	SLE RA 18	40	1137	7381	-48.12	30.91	-0.25
115	SLE RA 19	39	1147	7413	-48.5	29.18	-0.24
115	SLE RA 20	41	1154	7437	-48.69	31.16	-0.26
115	SLE RA 21	39	1164	7469	-49.07	29.43	-0.24
115	SLE FR 1	36	1014	6644	-42.88	27.54	-0.23
115	SLE FR 2	35	1017	6654	-43	26.96	-0.22
115	SLE FR 3	36	1020	6666	-43.1	27.64	-0.23
115	SLE FR 4	37	1054	6875	-44.58	27.97	-0.23
115	SLE FR 5	37	1058	6887	-44.68	28.65	-0.24
115	SLE FR 6	38	1075	7012	-45.5	29.22	-0.24
115	SLE QP 1	36	1014	6644	-42.88	27.54	-0.23
115	SLE QP 2	37	1051	6865	-44.45	28.55	-0.23
115	SLD 1	83	1373	8573	-57.22	63.4	-0.52
115	SLD 2	83	1373	8573	-57.22	63.4	-0.52
115	SLD 3	74	1029	8014	-45.53	56.74	-0.47

Nodo	Cont.	Reazione a traslazione			Reazione a rotazione		
Ind.	N.br.	x	y	z	x	y	z
115	SLD 4	74	1029	8014	-45.53	56.74	-0.47
115	SLD 5	65	1668	8224	-66.02	49.09	-0.41
115	SLD 6	65	1668	8224	-66.02	49.09	-0.41
115	SLD 7	34	523	6363	-27.04	26.92	-0.22
115	SLD 8	34	523	6363	-27.04	26.92	-0.22
115	SLD 9	40	1578	7366	-61.86	30.18	-0.25
115	SLD 10	40	1578	7366	-61.86	30.18	-0.25
115	SLD 11	10	433	5506	-22.88	8	-0.06
115	SLD 12	10	433	5506	-22.88	8	-0.06
115	SLD 13	1	1072	5715	-43.37	0.35	0
115	SLD 14	1	1072	5715	-43.37	0.35	0
115	SLD 15	-8	729	5157	-31.68	-6.3	0.05
115	SLD 16	-8	729	5157	-31.68	-6.3	0.05
115	SLV 1	144	1805	10870	-74.38	110.29	-0.91
115	SLV 2	144	1805	10870	-74.38	110.29	-0.91
115	SLV 3	122	1004	9550	-47.06	94.38	-0.77
115	SLV 4	122	1004	9550	-47.06	94.38	-0.77
115	SLV 5	103	2491	10068	-94.86	77.2	-0.64
115	SLV 6	103	2491	10068	-94.86	77.2	-0.64
115	SLV 7	29	-178	5669	-3.8	24.17	-0.19
115	SLV 8	29	-178	5669	-3.8	24.17	-0.19
115	SLV 9	45	2279	8061	-85.1	32.93	-0.28
115	SLV 10	45	2279	8061	-85.1	32.93	-0.28
115	SLV 11	-28	-390	3661	5.96	-20.11	0.17
115	SLV 12	-28	-390	3661	5.96	-20.11	0.17
115	SLV 13	-48	1097	4179	-41.84	-37.28	0.3
115	SLV 14	-48	1097	4179	-41.84	-37.28	0.3
115	SLV 15	-70	297	2860	-14.53	-53.19	0.44
115	SLV 16	-70	297	2860	-14.53	-53.19	0.44
116	SLU 1	13	30	2912	-0.32	9.54	0
116	SLU 2	14	253	2946	-8.64	10.11	0
116	SLU 3	14	32	2979	-0.13	9.83	0
116	SLU 4	14	166	3000	-5.12	10.17	0
116	SLU 5	14	255	2985	-8.47	10.28	0
116	SLU 6	14	34	3018	0.04	10	0
116	SLU 7	14	168	3038	-4.95	10.34	0
116	SLU 8	14	34	2989	0.02	9.88	0
116	SLU 9	14	167	3010	-4.97	10.22	0
116	SLU 10	16	248	3333	-8.11	11.6	0
116	SLU 11	16	28	3366	0.41	11.32	0
116	SLU 12	16	161	3387	-4.59	11.66	0
116	SLU 13	16	250	3372	-7.94	11.77	0
116	SLU 14	16	30	3405	0.58	11.49	0
116	SLU 15	16	163	3425	-4.41	11.83	0
116	SLU 16	16	30	3376	0.56	11.37	0
116	SLU 17	16	163	3396	-4.44	11.71	0
116	SLU 18	16	24	3465	0.44	11.67	0
116	SLU 19	17	157	3485	-4.55	12.01	0
116	SLU 20	17	26	3503	0.62	11.84	0
116	SLU 21	17	159	3524	-4.38	12.18	0
116	SLU 22	15	29	3271	0.19	10.95	0
116	SLU 23	16	252	3305	-8.13	11.52	0
116	SLU 24	16	31	3338	0.39	11.24	0
116	SLU 25	16	165	3358	-4.61	11.58	0
116	SLU 26	16	254	3343	-7.96	11.69	0
116	SLU 27	16	33	3376	0.56	11.41	0
116	SLU 28	16	166	3397	-4.43	11.75	0
116	SLU 29	16	33	3348	0.54	11.29	0
116	SLU 30	16	166	3368	-4.46	11.63	0
116	SLU 31	18	247	3691	-7.59	13.01	0
116	SLU 32	18	27	3724	0.92	12.73	0
116	SLU 33	18	160	3745	-4.07	13.07	0
116	SLU 34	18	249	3730	-7.42	13.18	0
116	SLU 35	18	29	3763	1.1	12.9	0
116	SLU 36	18	162	3783	-3.9	13.24	0
116	SLU 37	18	29	3734	1.07	12.78	0
116	SLU 38	18	162	3755	-3.92	13.12	0
116	SLU 39	18	23	3823	0.96	13.09	0
116	SLU 40	19	156	3844	-4.03	13.43	0
116	SLU 41	18	25	3862	1.13	13.25	0
116	SLU 42	19	158	3882	-3.86	13.59	0
116	SLU 43	17	40	3663	-0.6	11.92	0
116	SLU 44	17	262	3697	-8.92	12.49	0
116	SLU 45	17	42	3730	-0.4	12.21	0
116	SLU 46	17	175	3751	-5.4	12.55	0
116	SLU 47	17	264	3736	-8.75	12.65	0
116	SLU 48	17	43	3769	-0.23	12.38	0
116	SLU 49	18	177	3789	-5.22	12.72	0
116	SLU 50	17	43	3740	-0.25	12.26	0
116	SLU 51	17	177	3761	-5.25	12.6	0
116	SLU 52	19	258	4084	-8.38	13.98	0
116	SLU 53	19	37	4117	0.13	13.7	0
116	SLU 54	19	171	4137	-4.86	14.04	0
116	SLU 55	20	260	4122	-8.21	14.15	0
116	SLU 56	19	39	4155	0.31	13.87	0
116	SLU 57	20	173	4176	-4.69	14.21	0
116	SLU 58	19	39	4127	0.28	13.75	0
116	SLU 59	20	172	4147	-4.71	14.09	0
116	SLU 60	20	33	4216	0.17	14.05	0
116	SLU 61	20	167	4236	-4.82	14.39	0

Nodo	Cont.	Reazione a traslazione			Reazione a rotazione		
Ind.	N.br.	x	y	z	x	y	z
116	SLU 62	20	35	4254	0.34	14.22	0
116	SLU 63	20	169	4274	-4.65	14.56	0
116	SLU 64	19	39	4022	-0.08	13.33	0
116	SLU 65	19	261	4056	-8.4	13.9	0
116	SLU 66	19	41	4089	0.11	13.62	0
116	SLU 67	19	174	4109	-4.88	13.96	0
116	SLU 68	19	263	4094	-8.23	14.07	0
116	SLU 69	19	42	4127	0.29	13.79	0
116	SLU 70	20	176	4148	-4.71	14.13	0
116	SLU 71	19	42	4098	0.26	13.67	0
116	SLU 72	19	176	4119	-4.73	14.01	0
116	SLU 73	21	257	4442	-7.87	15.39	0
116	SLU 74	21	36	4475	0.65	15.11	0
116	SLU 75	21	170	4496	-4.34	15.45	0
116	SLU 76	22	259	4481	-7.69	15.56	0
116	SLU 77	21	38	4514	0.82	15.28	0
116	SLU 78	22	172	4534	-4.17	15.62	0
116	SLU 79	21	38	4485	0.8	15.16	0
116	SLU 80	22	171	4506	-4.19	15.5	0
116	SLU 81	22	32	4574	0.69	15.46	0
116	SLU 82	22	166	4594	-4.31	15.8	0
116	SLU 83	22	34	4612	0.86	15.63	0
116	SLU 84	22	168	4633	-4.14	15.97	0
116	SLE RA 1	14	30	3015	-0.18	9.95	0
116	SLE RA 2	14	178	3037	-5.72	10.32	0
116	SLE RA 3	14	31	3059	-0.05	10.14	0
116	SLE RA 4	14	120	3073	-3.37	10.36	0
116	SLE RA 5	14	180	3063	-5.61	10.43	0
116	SLE RA 6	14	32	3085	0.07	10.25	0
116	SLE RA 7	15	121	3099	-3.26	10.48	0
116	SLE RA 8	14	32	3066	0.05	10.17	0
116	SLE RA 9	14	121	3080	-3.28	10.4	0
116	SLE RA 10	16	175	3295	-5.37	11.32	0
116	SLE RA 11	16	28	3317	0.31	11.13	0
116	SLE RA 12	16	117	3331	-3.02	11.36	0
116	SLE RA 13	16	177	3321	-5.25	11.43	0
116	SLE RA 14	16	30	3343	0.43	11.24	0
116	SLE RA 15	16	119	3357	-2.9	11.47	0
116	SLE RA 16	16	29	3324	0.41	11.16	0
116	SLE RA 17	16	118	3337	-2.92	11.39	0
116	SLE RA 18	16	26	3383	0.34	11.37	0
116	SLE RA 19	16	115	3397	-2.99	11.59	0
116	SLE RA 20	16	27	3409	0.45	11.48	0
116	SLE RA 21	16	116	3422	-2.88	11.71	0
116	SLE FR 1	14	30	3015	-0.18	9.95	0
116	SLE FR 2	14	60	3019	-1.29	10.02	0
116	SLE FR 3	14	30	3025	-0.13	9.99	0
116	SLE FR 4	15	58	3130	-1.13	10.45	0
116	SLE FR 5	15	29	3135	0.02	10.42	0
116	SLE FR 6	15	28	3199	0.08	10.66	0
116	SLE QP 1	14	30	3015	-0.18	9.95	0
116	SLE QP 2	14	29	3125	-0.02	10.37	0
116	SLD 1	26	44	3404	-0.6	20.12	0
116	SLD 2	26	44	3404	-0.6	20.12	0
116	SLD 3	23	-346	3230	14.25	17.85	0
116	SLD 4	23	-346	3230	14.25	17.85	0
116	SLD 5	23	625	3473	-22.71	16.74	0
116	SLD 6	23	625	3473	-22.71	16.74	0
116	SLD 7	12	-675	2892	26.78	9.17	0
116	SLD 8	12	-675	2892	26.78	9.17	0
116	SLD 9	17	733	3358	-26.82	11.57	0
116	SLD 10	17	733	3358	-26.82	11.57	0
116	SLD 11	6	-568	2777	22.67	4	0
116	SLD 12	6	-568	2777	22.67	4	0
116	SLD 13	6	403	3021	-14.29	2.89	0
116	SLD 14	6	403	3021	-14.29	2.89	0
116	SLD 15	3	13	2846	0.55	0.62	0
116	SLD 16	3	13	2846	0.55	0.62	0
116	SLV 1	42	71	3782	-1.66	33.37	0
116	SLV 2	42	71	3782	-1.66	33.37	0
116	SLV 3	35	-868	3371	34.16	27.77	0
116	SLV 4	35	-868	3371	34.16	27.77	0
116	SLV 5	34	1466	3945	-54.85	25.77	0
116	SLV 6	34	1466	3945	-54.85	25.77	0
116	SLV 7	9	-1665	2576	64.57	7.09	0
116	SLV 8	9	-1665	2576	64.57	7.09	0
116	SLV 9	20	1723	3674	-64.62	13.65	0.01
116	SLV 10	20	1723	3674	-64.62	13.65	0.01
116	SLV 11	-5	-1409	2306	54.81	-5.03	0
116	SLV 12	-5	-1409	2306	54.81	-5.03	0
116	SLV 13	-6	925	2879	-34.21	-7.02	0.01
116	SLV 14	-6	925	2879	-34.21	-7.02	0.01
116	SLV 15	-14	-14	2469	1.62	-12.63	0
116	SLV 16	-14	-14	2469	1.62	-12.63	0
117	SLU 1	6	-220	5907	14.55	5.28	-0.02
117	SLU 2	6	-318	5970	18.12	5.47	-0.02
117	SLU 3	6	-224	6063	15.07	5.45	-0.02
117	SLU 4	6	-282	6100	17.22	5.56	-0.02
117	SLU 5	6	-321	6073	18.5	5.56	-0.02
117	SLU 6	6	-227	6166	15.45	5.54	-0.02

Nodo	Cont.	Reazione a traslazione			Reazione a rotazione		
Ind.	N.br.	x	y	z	x	y	z
117	SLU 7	6	-285	6203	17.59	5.65	-0.02
117	SLU 8	6	-226	6114	15.3	5.48	-0.02
117	SLU 9	6	-284	6151	17.45	5.59	-0.02
117	SLU 10	5	-337	6820	20.18	4.31	-0.01
117	SLU 11	5	-243	6913	17.13	4.29	-0.01
117	SLU 12	5	-302	6950	19.27	4.4	-0.01
117	SLU 13	5	-340	6923	20.56	4.41	-0.01
117	SLU 14	5	-246	7016	17.51	4.39	-0.01
117	SLU 15	5	-305	7053	19.65	4.5	-0.01
117	SLU 16	5	-245	6964	17.36	4.32	-0.01
117	SLU 17	5	-304	7002	19.5	4.43	-0.01
117	SLU 18	4	-248	7122	17.49	3.64	-0.01
117	SLU 19	4	-307	7160	19.64	3.75	-0.01
117	SLU 20	4	-251	7225	17.87	3.73	-0.01
117	SLU 21	4	-309	7263	20.01	3.84	-0.01
117	SLU 22	6	-241	6590	16.6	5.59	-0.02
117	SLU 23	7	-338	6652	20.17	5.77	-0.02
117	SLU 24	7	-244	6745	17.12	5.75	-0.02
117	SLU 25	7	-303	6782	19.26	5.86	-0.02
117	SLU 26	7	-341	6755	20.55	5.87	-0.02
117	SLU 27	7	-247	6848	17.5	5.85	-0.02
117	SLU 28	7	-305	6885	19.64	5.96	-0.02
117	SLU 29	7	-246	6796	17.35	5.78	-0.02
117	SLU 30	7	-305	6834	19.49	5.89	-0.02
117	SLU 31	5	-358	7502	22.23	4.62	-0.01
117	SLU 32	5	-264	7595	19.18	4.6	-0.01
117	SLU 33	5	-322	7633	21.32	4.71	-0.01
117	SLU 34	5	-360	7606	22.61	4.71	-0.01
117	SLU 35	5	-266	7698	19.56	4.69	-0.01
117	SLU 36	5	-325	7736	21.7	4.8	-0.01
117	SLU 37	5	-265	7646	19.41	4.63	-0.01
117	SLU 38	5	-324	7684	21.55	4.74	-0.01
117	SLU 39	4	-268	7805	19.54	3.94	-0.01
117	SLU 40	5	-327	7842	21.68	4.05	-0.01
117	SLU 41	5	-271	7908	19.92	4.04	-0.01
117	SLU 42	5	-330	7945	22.06	4.15	-0.01
117	SLU 43	8	-279	7446	18.22	6.76	-0.02
117	SLU 44	8	-377	7508	21.79	6.95	-0.02
117	SLU 45	8	-283	7601	18.74	6.93	-0.02
117	SLU 46	8	-342	7638	20.88	7.04	-0.02
117	SLU 47	8	-380	7611	22.16	7.04	-0.02
117	SLU 48	8	-286	7704	19.11	7.02	-0.02
117	SLU 49	8	-344	7741	21.25	7.13	-0.02
117	SLU 50	8	-285	7652	18.97	6.96	-0.02
117	SLU 51	8	-343	7690	21.11	7.07	-0.02
117	SLU 52	7	-397	8358	23.84	5.79	-0.02
117	SLU 53	7	-302	8451	20.79	5.77	-0.02
117	SLU 54	7	-361	8489	22.94	5.88	-0.02
117	SLU 55	7	-399	8462	24.22	5.89	-0.02
117	SLU 56	7	-305	8554	21.17	5.87	-0.02
117	SLU 57	7	-364	8592	23.31	5.98	-0.02
117	SLU 58	7	-304	8502	21.03	5.8	-0.02
117	SLU 59	7	-363	8540	23.17	5.91	-0.02
117	SLU 60	6	-307	8661	21.16	5.12	-0.01
117	SLU 61	6	-366	8698	23.3	5.23	-0.01
117	SLU 62	6	-310	8764	21.53	5.21	-0.01
117	SLU 63	6	-368	8801	23.67	5.32	-0.01
117	SLU 64	8	-300	8128	20.26	7.07	-0.02
117	SLU 65	8	-397	8190	23.83	7.25	-0.02
117	SLU 66	8	-303	8283	20.78	7.23	-0.02
117	SLU 67	8	-362	8321	22.93	7.34	-0.02
117	SLU 68	8	-400	8294	24.21	7.35	-0.02
117	SLU 69	8	-306	8386	21.16	7.33	-0.02
117	SLU 70	8	-365	8424	23.3	7.44	-0.02
117	SLU 71	8	-305	8334	21.02	7.26	-0.02
117	SLU 72	8	-364	8372	23.16	7.37	-0.02
117	SLU 73	7	-417	9041	25.89	6.1	-0.02
117	SLU 74	7	-323	9133	22.84	6.08	-0.02
117	SLU 75	7	-381	9171	24.99	6.19	-0.02
117	SLU 76	7	-420	9144	26.27	6.2	-0.02
117	SLU 77	7	-325	9237	23.22	6.17	-0.02
117	SLU 78	7	-384	9274	25.36	6.28	-0.02
117	SLU 79	7	-325	9185	23.07	6.11	-0.02
117	SLU 80	7	-383	9222	25.22	6.22	-0.02
117	SLU 81	6	-328	9343	23.2	5.42	-0.01
117	SLU 82	6	-386	9380	25.35	5.53	-0.01
117	SLU 83	6	-330	9446	23.58	5.52	-0.01
117	SLU 84	6	-389	9483	25.72	5.63	-0.01
117	SLE RA 1	6	-226	6102	15.14	5.37	-0.02
117	SLE RA 2	6	-291	6144	17.52	5.49	-0.02
117	SLE RA 3	6	-229	6206	15.48	5.48	-0.02
117	SLE RA 4	6	-268	6231	16.91	5.55	-0.02
117	SLE RA 5	6	-293	6213	17.77	5.56	-0.02
117	SLE RA 6	6	-230	6275	15.73	5.54	-0.02
117	SLE RA 7	6	-269	6300	17.16	5.62	-0.02
117	SLE RA 8	6	-230	6240	15.64	5.5	-0.02
117	SLE RA 9	6	-269	6265	17.07	5.57	-0.02
117	SLE RA 10	5	-304	6711	18.89	4.72	-0.01
117	SLE RA 11	5	-241	6773	16.86	4.71	-0.01
117	SLE RA 12	5	-281	6798	18.28	4.78	-0.01

Nodo	Cont.	Reazione a traslazione			Reazione a rotazione		
Ind.	N.br.	x	y	z	x	y	z
117	SLE RA 13	5	-306	6780	19.14	4.79	-0.01
117	SLE RA 14	5	-243	6841	17.11	4.77	-0.01
117	SLE RA 15	6	-282	6866	18.54	4.85	-0.01
117	SLE RA 16	5	-243	6807	17.01	4.73	-0.01
117	SLE RA 17	5	-282	6832	18.44	4.8	-0.01
117	SLE RA 18	5	-245	6912	17.1	4.27	-0.01
117	SLE RA 19	5	-284	6937	18.53	4.35	-0.01
117	SLE RA 20	5	-246	6981	17.35	4.34	-0.01
117	SLE RA 21	5	-285	7006	18.78	4.41	-0.01
117	SLE FR 1	6	-226	6102	15.14	5.37	-0.02
117	SLE FR 2	6	-239	6111	15.61	5.4	-0.02
117	SLE FR 3	6	-227	6130	15.24	5.4	-0.02
117	SLE FR 4	6	-245	6354	16.2	5.07	-0.01
117	SLE FR 5	6	-232	6373	15.83	5.07	-0.01
117	SLE FR 6	5	-235	6507	16.12	4.82	-0.01
117	SLE QP 1	6	-226	6102	15.14	5.37	-0.02
117	SLE QP 2	6	-232	6345	15.73	5.04	-0.01
117	SLD 1	34	115	6666	3.49	30.24	-0.1
117	SLD 2	34	115	6666	3.49	30.24	-0.1
117	SLD 3	37	-295	6566	18.29	33.18	-0.11
117	SLD 4	37	-295	6566	18.29	33.18	-0.11
117	SLD 5	9	494	6594	-10.4	8.13	-0.03
117	SLD 6	9	494	6594	-10.4	8.13	-0.03
117	SLD 7	20	-873	6259	38.94	17.95	-0.06
117	SLD 8	20	-873	6259	38.94	17.95	-0.06
117	SLD 9	-9	409	6431	-7.49	-7.87	0.03
117	SLD 10	-9	409	6431	-7.49	-7.87	0.03
117	SLD 11	2	-958	6097	41.85	1.95	0
117	SLD 12	2	-958	6097	41.85	1.95	0
117	SLD 13	-26	-168	6125	13.16	-23.1	0.08
117	SLD 14	-26	-168	6125	13.16	-23.1	0.08
117	SLD 15	-23	-579	6024	27.96	-20.15	0.07
117	SLD 16	-23	-579	6024	27.96	-20.15	0.07
117	SLV 1	72	583	7107	-13.07	64.03	-0.22
117	SLV 2	72	583	7107	-13.07	64.03	-0.22
117	SLV 3	80	-380	6859	21.72	70.95	-0.24
117	SLV 4	80	-380	6859	21.72	70.95	-0.24
117	SLV 5	14	1474	6949	-45.68	12.25	-0.04
117	SLV 6	14	1474	6949	-45.68	12.25	-0.04
117	SLV 7	40	-1737	6124	70.29	35.31	-0.12
117	SLV 8	40	-1737	6124	70.29	35.31	-0.12
117	SLV 9	-28	1274	6567	-38.84	-25.22	0.09
117	SLV 10	-28	1274	6567	-38.84	-25.22	0.09
117	SLV 11	-2	-1937	5741	77.13	-2.16	0.01
117	SLV 12	-2	-1937	5741	77.13	-2.16	0.01
117	SLV 13	-68	-84	5832	9.73	-60.86	0.21
117	SLV 14	-68	-84	5832	9.73	-60.86	0.21
117	SLV 15	-61	-1047	5584	44.52	-53.95	0.19
117	SLV 16	-61	-1047	5584	44.52	-53.95	0.19
118	SLU 1	0	272	4065	-14.72	-0.37	0
118	SLU 2	-1	491	4094	-24.12	-1.05	0
118	SLU 3	0	292	4167	-15.95	-0.38	0
118	SLU 4	-1	423	4184	-21.58	-0.79	0
118	SLU 5	-1	507	4152	-25.14	-1.06	0
118	SLU 6	0	308	4224	-16.97	-0.39	0
118	SLU 7	-1	439	4242	-22.61	-0.8	0
118	SLU 8	0	304	4181	-16.77	-0.39	0
118	SLU 9	-1	436	4198	-22.41	-0.8	0
118	SLU 10	-1	537	4678	-27.07	-1.1	0
118	SLU 11	0	338	4750	-18.9	-0.43	0
118	SLU 12	-1	469	4768	-24.53	-0.84	0
118	SLU 13	-1	553	4736	-28.09	-1.11	0
118	SLU 14	0	354	4808	-19.92	-0.44	0
118	SLU 15	-1	485	4826	-25.56	-0.85	0
118	SLU 16	0	351	4764	-19.72	-0.44	0
118	SLU 17	-1	482	4782	-25.36	-0.85	0
118	SLU 18	-1	339	4898	-18.94	-0.44	0
118	SLU 19	-1	470	4916	-24.57	-0.85	0
118	SLU 20	-1	355	4956	-19.96	-0.45	0
118	SLU 21	-1	486	4974	-25.6	-0.86	0
118	SLU 22	0	323	4606	-17.9	-0.41	0
118	SLU 23	-1	541	4635	-27.29	-1.1	0
118	SLU 24	0	342	4707	-19.12	-0.43	0
118	SLU 25	-1	473	4725	-24.76	-0.84	0
118	SLU 26	-1	557	4693	-28.32	-1.11	0
118	SLU 27	0	358	4765	-20.15	-0.44	0
118	SLU 28	-1	489	4783	-25.78	-0.85	0
118	SLU 29	0	355	4721	-19.95	-0.44	0
118	SLU 30	-1	486	4739	-25.58	-0.85	0
118	SLU 31	-1	588	5219	-30.24	-1.15	0
118	SLU 32	-1	389	5291	-22.07	-0.48	0
118	SLU 33	-1	520	5309	-27.71	-0.89	0
118	SLU 34	-1	604	5276	-31.27	-1.16	0
118	SLU 35	-1	405	5349	-23.1	-0.49	0
118	SLU 36	-1	536	5367	-28.73	-0.9	0
118	SLU 37	-1	402	5305	-22.9	-0.49	0
118	SLU 38	-1	533	5323	-28.53	-0.9	0
118	SLU 39	-1	389	5439	-22.11	-0.49	0
118	SLU 40	-1	521	5457	-27.75	-0.9	0
118	SLU 41	-1	405	5497	-23.13	-0.5	0

Nodo	Cont.	Reazione a traslazione			Reazione a rotazione		
Ind.	N.br.	x	y	z	x	y	z
118	SLU 42	-1	537	5515	-28.77	-0.91	0
118	SLU 43	-1	337	5099	-18.05	-0.46	0
118	SLU 44	-1	555	5128	-27.45	-1.14	0
118	SLU 45	-1	356	5201	-19.28	-0.48	0
118	SLU 46	-1	487	5218	-24.91	-0.88	0
118	SLU 47	-1	571	5186	-28.47	-1.15	0
118	SLU 48	-1	372	5258	-20.3	-0.49	0
118	SLU 49	-1	503	5276	-25.94	-0.9	0
118	SLU 50	-1	369	5215	-20.1	-0.48	0
118	SLU 51	-1	500	5232	-25.74	-0.89	0
118	SLU 52	-1	602	5712	-30.39	-1.19	0
118	SLU 53	-1	402	5784	-22.22	-0.53	0
118	SLU 54	-1	534	5802	-27.86	-0.93	0
118	SLU 55	-1	618	5770	-31.42	-1.2	0
118	SLU 56	-1	419	5842	-23.25	-0.54	0
118	SLU 57	-1	550	5860	-28.89	-0.95	0
118	SLU 58	-1	415	5798	-23.05	-0.53	0
118	SLU 59	-1	546	5816	-28.69	-0.94	0
118	SLU 60	-1	403	5932	-22.26	-0.53	0
118	SLU 61	-1	534	5950	-27.9	-0.94	0
118	SLU 62	-1	419	5990	-23.29	-0.54	0
118	SLU 63	-1	550	6008	-28.92	-0.95	0
118	SLU 64	-1	387	5640	-21.23	-0.51	0
118	SLU 65	-1	606	5669	-30.62	-1.19	0
118	SLU 66	-1	406	5741	-22.45	-0.52	0
118	SLU 67	-1	538	5759	-28.09	-0.93	0
118	SLU 68	-1	622	5727	-31.65	-1.2	0
118	SLU 69	-1	423	5799	-23.48	-0.54	0
118	SLU 70	-1	554	5817	-29.11	-0.94	0
118	SLU 71	-1	419	5755	-23.28	-0.53	0
118	SLU 72	-1	550	5773	-28.91	-0.94	0
118	SLU 73	-1	652	6253	-33.57	-1.24	0
118	SLU 74	-1	453	6325	-25.4	-0.57	0
118	SLU 75	-1	584	6343	-31.04	-0.98	0
118	SLU 76	-1	668	6310	-34.59	-1.25	0
118	SLU 77	-1	469	6383	-26.42	-0.59	0
118	SLU 78	-1	600	6401	-32.06	-0.99	0
118	SLU 79	-1	466	6339	-26.22	-0.58	0
118	SLU 80	-1	597	6357	-31.86	-0.99	0
118	SLU 81	-1	454	6473	-25.44	-0.58	0
118	SLU 82	-1	585	6491	-31.08	-0.99	0
118	SLU 83	-1	470	6531	-26.46	-0.59	0
118	SLU 84	-1	601	6549	-32.1	-1	0
118	SLE RA 1	0	287	4219	-15.63	-0.38	0
118	SLE RA 2	-1	432	4239	-21.89	-0.84	0
118	SLE RA 3	0	300	4287	-16.45	-0.39	0
118	SLE RA 4	-1	387	4299	-20.2	-0.66	0
118	SLE RA 5	-1	443	4277	-22.58	-0.84	0
118	SLE RA 6	0	310	4326	-17.13	-0.4	0
118	SLE RA 7	-1	398	4337	-20.89	-0.67	0
118	SLE RA 8	0	308	4296	-17	-0.4	0
118	SLE RA 9	-1	396	4308	-20.75	-0.67	0
118	SLE RA 10	-1	463	4628	-23.86	-0.87	0
118	SLE RA 11	0	331	4676	-18.41	-0.42	0
118	SLE RA 12	-1	418	4688	-22.17	-0.7	0
118	SLE RA 13	-1	474	4667	-24.54	-0.88	0
118	SLE RA 14	0	341	4715	-19.1	-0.43	0
118	SLE RA 15	-1	429	4727	-22.85	-0.7	0
118	SLE RA 16	0	339	4686	-18.96	-0.43	0
118	SLE RA 17	-1	427	4697	-22.72	-0.7	0
118	SLE RA 18	0	331	4775	-18.44	-0.43	0
118	SLE RA 19	-1	418	4787	-22.2	-0.7	0
118	SLE RA 20	0	342	4814	-19.12	-0.44	0
118	SLE RA 21	-1	429	4825	-22.88	-0.71	0
118	SLE FR 1	0	287	4219	-15.63	-0.38	0
118	SLE FR 2	-1	316	4223	-16.88	-0.47	0
118	SLE FR 3	0	291	4235	-15.9	-0.38	0
118	SLE FR 4	-1	329	4390	-17.73	-0.49	0
118	SLE FR 5	0	304	4401	-16.75	-0.4	0
118	SLE FR 6	0	309	4497	-17.03	-0.4	0
118	SLE QP 1	0	287	4219	-15.63	-0.38	0
118	SLE QP 2	0	300	4386	-16.47	-0.39	0
118	SLD 1	5	340	4467	-17.93	5.1	-0.01
118	SLD 2	5	340	4467	-17.93	5.1	-0.01
118	SLD 3	7	-46	4212	-1.93	6.67	-0.01
118	SLD 4	7	-46	4212	-1.93	6.67	-0.01
118	SLD 5	-1	897	4797	-41.19	-1.14	0
118	SLD 6	-1	897	4797	-41.19	-1.14	0
118	SLD 7	5	-389	3947	12.17	4.11	0
118	SLD 8	5	-389	3947	12.17	4.11	0
118	SLD 9	-5	989	4825	-45.11	-4.9	0
118	SLD 10	-5	989	4825	-45.11	-4.9	0
118	SLD 11	0	-297	3975	8.24	0.35	0
118	SLD 12	0	-297	3975	8.24	0.35	0
118	SLD 13	-8	646	4560	-31.02	-7.46	0.01
118	SLD 14	-8	646	4560	-31.02	-7.46	0.01
118	SLD 15	-6	260	4305	-15.01	-5.88	0.01
118	SLD 16	-6	260	4305	-15.01	-5.88	0.01
118	SLV 1	13	396	4576	-19.99	12.71	-0.01
118	SLV 2	13	396	4576	-19.99	12.71	-0.01

Nodo	Cont.	Reazione a traslazione			Reazione a rotazione		
Ind.	N.br.	x	y	z	x	y	z
118	SLV 3	18	-528	3976	18.26	16.68	-0.02
118	SLV 4	18	-528	3976	18.26	16.68	-0.02
118	SLV 5	-3	1730	5352	-75.53	-2.48	0
118	SLV 6	-3	1730	5352	-75.53	-2.48	0
118	SLV 7	12	-1349	3354	51.95	10.74	-0.01
118	SLV 8	12	-1349	3354	51.95	10.74	-0.01
118	SLV 9	-13	1949	5418	-84.9	-11.53	0.01
118	SLV 10	-13	1949	5418	-84.9	-11.53	0.01
118	SLV 11	2	-1130	3420	42.59	1.69	0
118	SLV 12	2	-1130	3420	42.59	1.69	0
118	SLV 13	-19	1128	4796	-51.21	-17.47	0.02
118	SLV 14	-19	1128	4796	-51.21	-17.47	0.02
118	SLV 15	-14	204	4196	-12.96	-13.5	0.01
118	SLV 16	-14	204	4196	-12.96	-13.5	0.01
119	SLU 1	4	947	6328	-58.89	2.18	0
119	SLU 2	8	986	6413	-60.87	6.19	0
119	SLU 3	4	977	6494	-60.61	2.25	0
119	SLU 4	6	999	6545	-61.8	4.66	0
119	SLU 5	8	1001	6508	-61.78	6.23	0
119	SLU 6	4	992	6588	-61.51	2.29	0
119	SLU 7	6	1015	6639	-62.71	4.7	0
119	SLU 8	4	979	6517	-60.7	2.26	0
119	SLU 9	6	1002	6568	-61.89	4.67	0
119	SLU 10	8	1121	7205	-69.37	6.54	0
119	SLU 11	5	1112	7286	-69.11	2.6	0
119	SLU 12	7	1135	7336	-70.3	5.01	0
119	SLU 13	8	1137	7299	-70.28	6.58	0
119	SLU 14	5	1128	7380	-70.01	2.64	0
119	SLU 15	7	1151	7431	-71.2	5.05	0
119	SLU 16	5	1115	7309	-69.2	2.61	0
119	SLU 17	7	1138	7360	-70.39	5.01	0
119	SLU 18	5	1141	7460	-71.03	2.67	0
119	SLU 19	7	1164	7510	-72.22	5.08	0
119	SLU 20	5	1157	7554	-71.93	2.71	0
119	SLU 21	7	1180	7605	-73.13	5.12	0
119	SLU 22	4	1079	7081	-67.01	2.51	0
119	SLU 23	8	1117	7166	-69	6.53	0
119	SLU 24	5	1108	7246	-68.73	2.59	0
119	SLU 25	7	1131	7297	-69.93	5	0
119	SLU 26	8	1133	7260	-69.91	6.57	0
119	SLU 27	5	1124	7341	-69.64	2.63	0
119	SLU 28	7	1146	7392	-70.83	5.04	0
119	SLU 29	5	1110	7270	-68.83	2.6	0
119	SLU 30	7	1133	7321	-70.02	5	0
119	SLU 31	9	1252	7957	-77.5	6.88	0
119	SLU 32	5	1243	8038	-77.23	2.94	0
119	SLU 33	7	1266	8089	-78.42	5.35	0
119	SLU 34	9	1268	8052	-78.4	6.92	0
119	SLU 35	5	1259	8133	-78.14	2.98	0
119	SLU 36	8	1282	8183	-79.33	5.39	0
119	SLU 37	5	1246	8062	-77.32	2.94	0
119	SLU 38	8	1269	8112	-78.51	5.35	0
119	SLU 39	5	1272	8212	-79.15	3.01	0
119	SLU 40	8	1295	8263	-80.34	5.42	0
119	SLU 41	5	1288	8307	-80.06	3.05	0
119	SLU 42	8	1311	8357	-81.25	5.46	0
119	SLU 43	5	1187	7969	-73.77	2.71	0
119	SLU 44	9	1225	8054	-75.76	6.73	0
119	SLU 45	5	1216	8134	-75.49	2.79	0
119	SLU 46	7	1239	8185	-76.68	5.2	0
119	SLU 47	9	1241	8148	-76.66	6.77	0
119	SLU 48	5	1232	8229	-76.4	2.83	0
119	SLU 49	7	1255	8280	-77.59	5.24	0
119	SLU 50	5	1218	8158	-75.58	2.79	0
119	SLU 51	7	1241	8209	-76.77	5.2	0
119	SLU 52	9	1360	8845	-84.25	7.08	0
119	SLU 53	6	1351	8926	-83.99	3.14	0
119	SLU 54	8	1374	8977	-85.18	5.54	0
119	SLU 55	9	1376	8940	-85.16	7.12	0
119	SLU 56	6	1367	9021	-84.89	3.18	0
119	SLU 57	8	1390	9071	-86.08	5.59	0
119	SLU 58	6	1354	8950	-84.08	3.14	0
119	SLU 59	8	1377	9001	-85.27	5.55	0
119	SLU 60	6	1380	9100	-85.91	3.21	0
119	SLU 61	8	1403	9151	-87.1	5.62	0
119	SLU 62	6	1396	9195	-86.82	3.25	0
119	SLU 63	8	1419	9245	-88.01	5.66	0
119	SLU 64	5	1318	8721	-81.9	3.05	0
119	SLU 65	9	1356	8806	-83.88	7.07	0
119	SLU 66	6	1347	8887	-83.62	3.13	0
119	SLU 67	8	1370	8938	-84.81	5.53	0
119	SLU 68	9	1372	8901	-84.79	7.11	0
119	SLU 69	6	1363	8981	-84.52	3.17	0
119	SLU 70	8	1386	9032	-85.71	5.58	0
119	SLU 71	6	1350	8910	-83.71	3.13	0
119	SLU 72	8	1372	8961	-84.9	5.54	0
119	SLU 73	10	1491	9598	-92.38	7.41	0
119	SLU 74	6	1482	9679	-92.11	3.47	0
119	SLU 75	8	1505	9729	-93.3	5.88	0
119	SLU 76	10	1507	9692	-93.28	7.45	0

Nodo	Cont.	Reazione a traslazione			Reazione a rotazione		
Ind.	N.br.	x	y	z	x	y	z
119	SLU 77	6	1498	9773	-93.02	3.51	0
119	SLU 78	9	1521	9824	-94.21	5.92	0
119	SLU 79	6	1485	9702	-92.2	3.48	0
119	SLU 80	8	1508	9753	-93.4	5.89	0
119	SLU 81	6	1511	9853	-94.04	3.55	0
119	SLU 82	9	1534	9903	-95.23	5.96	0
119	SLU 83	6	1527	9947	-94.94	3.59	0
119	SLU 84	9	1550	9998	-96.13	6	0
119	SLE RA 1	4	985	6543	-61.21	2.27	0
119	SLE RA 2	7	1010	6600	-62.53	4.95	0
119	SLE RA 3	4	1004	6654	-62.36	2.32	0
119	SLE RA 4	6	1020	6688	-63.15	3.93	0
119	SLE RA 5	7	1021	6663	-63.14	4.98	0
119	SLE RA 6	4	1015	6717	-62.96	2.35	0
119	SLE RA 7	6	1030	6751	-63.76	3.96	0
119	SLE RA 8	4	1006	6669	-62.42	2.33	0
119	SLE RA 9	6	1021	6703	-63.21	3.93	0
119	SLE RA 10	7	1101	7128	-68.2	5.18	0
119	SLE RA 11	4	1095	7182	-68.02	2.55	0
119	SLE RA 12	6	1110	7215	-68.82	4.16	0
119	SLE RA 13	7	1111	7191	-68.8	5.21	0
119	SLE RA 14	5	1105	7245	-68.63	2.58	0
119	SLE RA 15	6	1120	7278	-69.42	4.19	0
119	SLE RA 16	4	1096	7197	-68.08	2.56	0
119	SLE RA 17	6	1112	7231	-68.88	4.16	0
119	SLE RA 18	5	1114	7297	-69.3	2.6	0
119	SLE RA 19	6	1129	7331	-70.1	4.21	0
119	SLE RA 20	5	1125	7360	-69.91	2.63	0
119	SLE RA 21	6	1140	7394	-70.7	4.24	0
119	SLE FR 1	4	985	6543	-61.21	2.27	0
119	SLE FR 2	5	990	6555	-61.48	2.81	0
119	SLE FR 3	4	989	6569	-61.45	2.28	0
119	SLE FR 4	5	1029	6781	-63.9	2.91	0
119	SLE FR 5	4	1028	6795	-63.88	2.38	0
119	SLE FR 6	4	1049	6920	-65.26	2.44	0
119	SLE QP 1	4	985	6543	-61.21	2.27	0
119	SLE QP 2	4	1024	6770	-63.64	2.37	0
119	SLD 1	26	1018	5515	-60.86	21.5	-0.01
119	SLD 2	26	1018	5515	-60.86	21.5	-0.01
119	SLD 3	20	655	4907	-42.01	16.41	-0.01
119	SLD 4	20	655	4907	-42.01	16.41	-0.01
119	SLD 5	20	1573	7314	-91.38	15.83	0
119	SLD 6	20	1573	7314	-91.38	15.83	0
119	SLD 7	-1	362	5290	-28.58	-1.14	-0.01
119	SLD 8	-1	362	5290	-28.58	-1.14	-0.01
119	SLD 9	9	1685	8250	-98.7	5.88	0
119	SLD 10	9	1685	8250	-98.7	5.88	0
119	SLD 11	-12	474	6225	-35.9	-11.09	0
119	SLD 12	-12	474	6225	-35.9	-11.09	0
119	SLD 13	-11	1392	8632	-85.26	-11.66	0.01
119	SLD 14	-11	1392	8632	-85.26	-11.66	0.01
119	SLD 15	-18	1029	8025	-66.42	-16.76	0
119	SLD 16	-18	1029	8025	-66.42	-16.76	0
119	SLV 1	56	1008	3837	-57.01	48.28	-0.01
119	SLV 2	56	1008	3837	-57.01	48.28	-0.01
119	SLV 3	41	161	2405	-13.03	35.74	-0.02
119	SLV 4	41	161	2405	-13.03	35.74	-0.02
119	SLV 5	43	2304	8062	-128.35	35.16	0
119	SLV 6	43	2304	8062	-128.35	35.16	0
119	SLV 7	-8	-520	3288	18.25	-6.64	-0.02
119	SLV 8	-8	-520	3288	18.25	-6.64	-0.02
119	SLV 9	17	2567	10251	-145.52	11.38	0.01
119	SLV 10	17	2567	10251	-145.52	11.38	0.01
119	SLV 11	-35	-257	5478	1.07	-30.42	-0.01
119	SLV 12	-35	-257	5478	1.07	-30.42	-0.01
119	SLV 13	-32	1886	11135	-114.25	-30.99	0.02
119	SLV 14	-32	1886	11135	-114.25	-30.99	0.02
119	SLV 15	-48	1039	9703	-70.27	-43.53	0.01
119	SLV 16	-48	1039	9703	-70.27	-43.53	0.01
120	SLU 1	2	-75	472	3.17	1.29	0
120	SLU 2	2	-77	471	3.24	1.33	0
120	SLU 3	2	-78	471	3.29	1.31	0
120	SLU 4	2	-79	471	3.33	1.34	0
120	SLU 5	2	-79	471	3.32	1.34	0
120	SLU 6	2	-80	470	3.38	1.32	0
120	SLU 7	2	-81	470	3.42	1.35	0
120	SLU 8	2	-79	471	3.34	1.31	0
120	SLU 9	2	-80	470	3.38	1.33	0
120	SLU 10	2	-102	516	4.14	1.28	0
120	SLU 11	2	-103	516	4.19	1.27	0
120	SLU 12	2	-104	516	4.23	1.29	0
120	SLU 13	2	-104	516	4.22	1.3	0
120	SLU 14	2	-105	515	4.28	1.28	0
120	SLU 15	2	-106	515	4.32	1.31	0
120	SLU 16	2	-104	516	4.24	1.27	0
120	SLU 17	2	-105	515	4.28	1.29	0
120	SLU 18	2	-111	537	4.45	1.23	0
120	SLU 19	2	-112	536	4.49	1.25	0
120	SLU 20	2	-113	536	4.54	1.24	0
120	SLU 21	2	-114	535	4.58	1.26	0

Nodo	Cont.	Reazione a traslazione			Reazione a rotazione		
Ind.	N.br.	x	y	z	x	y	z
120	SLU 22	2	-90	481	3.78	1.4	0
120	SLU 23	2	-92	480	3.85	1.44	0
120	SLU 24	2	-93	480	3.91	1.43	0
120	SLU 25	2	-94	479	3.95	1.45	0
120	SLU 26	2	-94	479	3.94	1.45	0
120	SLU 27	2	-95	479	4	1.44	0
120	SLU 28	2	-96	478	4.04	1.46	0
120	SLU 29	2	-94	479	3.96	1.42	0
120	SLU 30	2	-95	479	4	1.45	0
120	SLU 31	2	-117	525	4.75	1.4	0
120	SLU 32	2	-118	525	4.81	1.38	0
120	SLU 33	2	-119	524	4.85	1.41	0
120	SLU 34	2	-119	524	4.84	1.41	0
120	SLU 35	2	-120	524	4.89	1.4	0
120	SLU 36	2	-121	523	4.94	1.42	0
120	SLU 37	2	-119	524	4.86	1.38	0
120	SLU 38	2	-120	524	4.9	1.41	0
120	SLU 39	2	-126	545	5.07	1.34	-0.01
120	SLU 40	2	-127	544	5.11	1.36	-0.01
120	SLU 41	2	-128	544	5.15	1.35	-0.01
120	SLU 42	2	-129	544	5.2	1.38	-0.01
120	SLU 43	3	-93	611	3.9	1.63	0
120	SLU 44	3	-94	610	3.98	1.67	0
120	SLU 45	3	-95	610	4.03	1.66	0
120	SLU 46	3	-96	610	4.07	1.68	0
120	SLU 47	3	-96	609	4.06	1.68	0
120	SLU 48	3	-97	609	4.12	1.67	0
120	SLU 49	3	-98	609	4.16	1.69	0
120	SLU 50	3	-97	610	4.08	1.66	0
120	SLU 51	3	-97	609	4.12	1.68	0
120	SLU 52	3	-119	655	4.87	1.63	0
120	SLU 53	3	-120	655	4.93	1.62	0
120	SLU 54	3	-121	654	4.97	1.64	0
120	SLU 55	3	-121	654	4.96	1.64	0
120	SLU 56	3	-122	654	5.01	1.63	0
120	SLU 57	3	-123	654	5.06	1.65	0
120	SLU 58	3	-121	654	4.98	1.62	0
120	SLU 59	3	-122	654	5.02	1.64	0
120	SLU 60	3	-128	675	5.19	1.57	0
120	SLU 61	3	-129	675	5.23	1.6	0
120	SLU 62	3	-130	675	5.28	1.59	0
120	SLU 63	3	-131	674	5.32	1.61	0
120	SLU 64	3	-108	620	4.52	1.75	0
120	SLU 65	3	-109	619	4.59	1.79	0
120	SLU 66	3	-111	619	4.65	1.77	0
120	SLU 67	3	-112	618	4.69	1.8	0
120	SLU 68	3	-111	618	4.68	1.8	0
120	SLU 69	3	-113	618	4.73	1.78	0
120	SLU 70	3	-114	617	4.78	1.81	0
120	SLU 71	3	-112	618	4.69	1.77	0
120	SLU 72	3	-113	617	4.74	1.8	0
120	SLU 73	3	-134	664	5.49	1.74	0
120	SLU 74	3	-135	663	5.55	1.73	0
120	SLU 75	3	-136	663	5.59	1.75	0
120	SLU 76	3	-136	663	5.58	1.76	0
120	SLU 77	3	-137	663	5.63	1.74	0
120	SLU 78	3	-138	662	5.67	1.77	0
120	SLU 79	3	-136	663	5.59	1.73	0
120	SLU 80	3	-137	662	5.64	1.75	0
120	SLU 81	3	-143	684	5.81	1.69	-0.01
120	SLU 82	3	-144	683	5.85	1.71	-0.01
120	SLU 83	3	-145	683	5.89	1.7	-0.01
120	SLU 84	3	-146	682	5.94	1.72	-0.01
120	SLE RA 1	2	-80	475	3.34	1.32	0
120	SLE RA 2	2	-81	474	3.39	1.34	0
120	SLE RA 3	2	-81	474	3.43	1.34	0
120	SLE RA 4	2	-82	474	3.45	1.35	0
120	SLE RA 5	2	-82	474	3.45	1.35	0
120	SLE RA 6	2	-83	474	3.48	1.34	0
120	SLE RA 7	2	-83	473	3.51	1.36	0
120	SLE RA 8	2	-82	474	3.46	1.34	0
120	SLE RA 9	2	-83	473	3.49	1.35	0
120	SLE RA 10	2	-97	504	3.99	1.32	0
120	SLE RA 11	2	-98	504	4.03	1.31	0
120	SLE RA 12	2	-99	504	4.05	1.32	0
120	SLE RA 13	2	-99	504	4.05	1.33	0
120	SLE RA 14	2	-99	503	4.08	1.32	0
120	SLE RA 15	2	-100	503	4.11	1.33	0
120	SLE RA 16	2	-99	504	4.06	1.31	0
120	SLE RA 17	2	-99	503	4.09	1.32	0
120	SLE RA 18	2	-103	518	4.2	1.28	0
120	SLE RA 19	2	-104	517	4.23	1.29	0
120	SLE RA 20	2	-105	517	4.26	1.29	0
120	SLE RA 21	2	-105	517	4.28	1.3	0
120	SLE FR 1	2	-80	475	3.34	1.32	0
120	SLE FR 2	2	-80	475	3.35	1.32	0
120	SLE FR 3	2	-80	475	3.37	1.32	0
120	SLE FR 4	2	-87	488	3.61	1.31	0
120	SLE FR 5	2	-87	487	3.62	1.31	0
120	SLE FR 6	2	-91	496	3.77	1.3	0

Nodo	Cont.	Reazione a traslazione			Reazione a rotazione		
Ind.	N.br.	x	y	z	x	y	z
120	SLE QP 1	2	-80	475	3.34	1.32	0
120	SLE QP 2	2	-87	488	3.6	1.31	0
120	SLD 1	12	-52	506	2.07	9.56	0.05
120	SLD 2	12	-52	506	2.07	9.56	0.05
120	SLD 3	13	-145	495	6.16	10.46	0.06
120	SLD 4	13	-145	495	6.16	10.46	0.06
120	SLD 5	3	66	509	-3.07	2.43	0
120	SLD 6	3	66	509	-3.07	2.43	0
120	SLD 7	7	-246	474	10.58	5.4	0.03
120	SLD 8	7	-246	474	10.58	5.4	0.03
120	SLD 9	-3	73	501	-3.38	-2.79	-0.04
120	SLD 10	-3	73	501	-3.38	-2.79	-0.04
120	SLD 11	1	-239	467	10.28	0.18	0
120	SLD 12	1	-239	467	10.28	0.18	0
120	SLD 13	-9	-28	480	1.04	-7.84	-0.07
120	SLD 14	-9	-28	480	1.04	-7.84	-0.07
120	SLD 15	-8	-122	470	5.13	-6.95	-0.06
120	SLD 16	-8	-122	470	5.13	-6.95	-0.06
120	SLV 1	26	-5	530	0.01	20.65	0.13
120	SLV 2	26	-5	530	0.01	20.65	0.13
120	SLV 3	28	-224	505	9.61	22.75	0.15
120	SLV 4	28	-224	505	9.61	22.75	0.15
120	SLV 5	5	270	537	-12.04	3.93	0.01
120	SLV 6	5	270	537	-12.04	3.93	0.01
120	SLV 7	14	-460	456	19.96	10.92	0.08
120	SLV 8	14	-460	456	19.96	10.92	0.08
120	SLV 9	-10	287	520	-12.76	-8.3	-0.08
120	SLV 10	-10	287	520	-12.76	-8.3	-0.08
120	SLV 11	-1	-444	438	19.24	-1.32	-0.01
120	SLV 12	-1	-444	438	19.24	-1.32	-0.01
120	SLV 13	-24	51	470	-2.41	-20.14	-0.15
120	SLV 14	-24	51	470	-2.41	-20.14	-0.15
120	SLV 15	-21	-168	446	7.19	-18.04	-0.13
120	SLV 16	-21	-168	446	7.19	-18.04	-0.13
121	SLU 1	23	-243	5210	9.18	15.96	-0.11
121	SLU 2	23	-339	5274	13.04	16.29	-0.11
121	SLU 3	24	-247	5346	9.36	16.42	-0.11
121	SLU 4	24	-304	5384	11.68	16.62	-0.11
121	SLU 5	24	-342	5362	13.19	16.59	-0.11
121	SLU 6	24	-250	5434	9.51	16.73	-0.11
121	SLU 7	24	-308	5473	11.83	16.93	-0.12
121	SLU 8	24	-249	5386	9.47	16.57	-0.11
121	SLU 9	24	-307	5425	11.79	16.77	-0.11
121	SLU 10	29	-379	6040	14.6	20.77	-0.15
121	SLU 11	30	-287	6112	10.93	20.91	-0.15
121	SLU 12	30	-345	6151	13.24	21.1	-0.16
121	SLU 13	30	-382	6129	14.75	21.08	-0.16
121	SLU 14	30	-290	6200	11.07	21.21	-0.16
121	SLU 15	30	-348	6239	13.39	21.41	-0.16
121	SLU 16	30	-289	6153	11.03	21.05	-0.15
121	SLU 17	30	-347	6191	13.35	21.25	-0.16
121	SLU 18	32	-300	6304	11.41	22.36	-0.17
121	SLU 19	32	-358	6343	13.72	22.56	-0.17
121	SLU 20	32	-303	6393	11.56	22.67	-0.17
121	SLU 21	32	-361	6431	13.87	22.87	-0.17
121	SLU 22	27	-270	5848	10.29	18.47	-0.13
121	SLU 23	27	-366	5912	14.15	18.8	-0.13
121	SLU 24	27	-274	5984	10.47	18.93	-0.13
121	SLU 25	28	-332	6023	12.79	19.13	-0.13
121	SLU 26	27	-369	6001	14.3	19.1	-0.13
121	SLU 27	28	-277	6073	10.62	19.24	-0.13
121	SLU 28	28	-335	6111	12.94	19.44	-0.14
121	SLU 29	28	-276	6025	10.58	19.08	-0.13
121	SLU 30	28	-334	6064	12.9	19.28	-0.13
121	SLU 31	33	-406	6679	15.71	23.28	-0.18
121	SLU 32	33	-314	6751	12.03	23.42	-0.17
121	SLU 33	34	-372	6789	14.35	23.61	-0.18
121	SLU 34	34	-409	6767	15.86	23.59	-0.18
121	SLU 35	34	-317	6839	12.18	23.72	-0.18
121	SLU 36	34	-375	6878	14.5	23.92	-0.18
121	SLU 37	34	-316	6791	12.14	23.56	-0.18
121	SLU 38	34	-374	6830	14.46	23.76	-0.18
121	SLU 39	35	-327	6943	12.52	24.87	-0.19
121	SLU 40	35	-385	6982	14.83	25.07	-0.19
121	SLU 41	36	-330	7031	12.66	25.18	-0.19
121	SLU 42	36	-388	7070	14.98	25.38	-0.19
121	SLU 43	29	-306	6553	11.55	19.89	-0.14
121	SLU 44	29	-402	6618	15.41	20.22	-0.14
121	SLU 45	29	-310	6690	11.74	20.35	-0.14
121	SLU 46	30	-368	6728	14.05	20.55	-0.14
121	SLU 47	30	-406	6706	15.56	20.52	-0.14
121	SLU 48	30	-313	6778	11.88	20.65	-0.14
121	SLU 49	30	-371	6817	14.2	20.85	-0.14
121	SLU 50	30	-313	6730	11.84	20.49	-0.14
121	SLU 51	30	-371	6769	14.16	20.69	-0.14
121	SLU 52	35	-442	7384	16.97	24.7	-0.18
121	SLU 53	35	-350	7456	13.3	24.83	-0.18
121	SLU 54	36	-408	7495	15.62	25.03	-0.18
121	SLU 55	36	-446	7473	17.12	25	-0.18
121	SLU 56	36	-354	7544	13.45	25.14	-0.18

Nodo	Cont.	Reazione a traslazione			Reazione a rotazione		
Ind.	N.br.	x	y	z	x	y	z
121	SLU 57	36	-411	7583	15.76	25.34	-0.18
121	SLU 58	36	-353	7497	13.41	24.98	-0.18
121	SLU 59	36	-411	7535	15.72	25.18	-0.18
121	SLU 60	37	-363	7648	13.78	26.29	-0.2
121	SLU 61	38	-421	7687	16.1	26.49	-0.2
121	SLU 62	38	-367	7737	13.93	26.6	-0.2
121	SLU 63	38	-424	7775	16.25	26.79	-0.2
121	SLU 64	32	-333	7192	12.66	22.4	-0.16
121	SLU 65	33	-430	7256	16.52	22.73	-0.16
121	SLU 66	33	-337	7328	12.85	22.86	-0.16
121	SLU 67	33	-395	7367	15.16	23.06	-0.16
121	SLU 68	33	-433	7345	16.67	23.03	-0.16
121	SLU 69	33	-341	7417	12.99	23.16	-0.16
121	SLU 70	34	-398	7455	15.31	23.36	-0.16
121	SLU 71	33	-340	7369	12.95	23.01	-0.16
121	SLU 72	33	-398	7407	15.27	23.2	-0.16
121	SLU 73	39	-470	8023	18.08	27.21	-0.2
121	SLU 74	39	-377	8095	14.41	27.34	-0.2
121	SLU 75	39	-435	8133	16.72	27.54	-0.2
121	SLU 76	39	-473	8111	18.23	27.51	-0.2
121	SLU 77	39	-381	8183	14.56	27.65	-0.2
121	SLU 78	40	-439	8222	16.87	27.85	-0.2
121	SLU 79	39	-380	8135	14.52	27.49	-0.2
121	SLU 80	39	-438	8174	16.83	27.69	-0.2
121	SLU 81	41	-390	8287	14.89	28.8	-0.22
121	SLU 82	41	-448	8325	17.21	29	-0.22
121	SLU 83	41	-394	8375	15.04	29.11	-0.22
121	SLU 84	42	-452	8414	17.35	29.3	-0.22
121	SLE RA 1	24	-250	5392	9.49	16.68	-0.12
121	SLE RA 2	24	-315	5435	12.07	16.9	-0.12
121	SLE RA 3	25	-253	5483	9.62	16.99	-0.12
121	SLE RA 4	25	-292	5508	11.16	17.12	-0.12
121	SLE RA 5	25	-317	5494	12.17	17.1	-0.12
121	SLE RA 6	25	-255	5542	9.72	17.19	-0.12
121	SLE RA 7	25	-294	5567	11.26	17.32	-0.12
121	SLE RA 8	25	-255	5510	9.69	17.08	-0.12
121	SLE RA 9	25	-293	5536	11.24	17.21	-0.12
121	SLE RA 10	28	-341	5946	13.11	19.88	-0.15
121	SLE RA 11	29	-280	5994	10.66	19.97	-0.15
121	SLE RA 12	29	-318	6019	12.2	20.11	-0.15
121	SLE RA 13	29	-344	6005	13.21	20.09	-0.15
121	SLE RA 14	29	-282	6053	10.76	20.18	-0.15
121	SLE RA 15	29	-321	6078	12.3	20.31	-0.15
121	SLE RA 16	29	-282	6021	10.73	20.07	-0.15
121	SLE RA 17	29	-320	6047	12.28	20.2	-0.15
121	SLE RA 18	30	-288	6122	10.98	20.95	-0.16
121	SLE RA 19	30	-327	6148	12.53	21.08	-0.16
121	SLE RA 20	30	-291	6181	11.08	21.15	-0.16
121	SLE RA 21	30	-329	6207	12.62	21.28	-0.16
121	SLE FR 1	24	-250	5392	9.49	16.68	-0.12
121	SLE FR 2	24	-263	5401	10.01	16.72	-0.12
121	SLE FR 3	24	-251	5416	9.53	16.76	-0.12
121	SLE FR 4	26	-275	5620	10.45	18	-0.13
121	SLE FR 5	26	-263	5635	9.98	18.04	-0.13
121	SLE FR 6	27	-269	5757	10.24	18.81	-0.14
121	SLE QP 1	24	-250	5392	9.49	16.68	-0.12
121	SLE QP 2	26	-262	5611	9.94	17.96	-0.13
121	SLD 1	44	-194	5249	7.2	35.74	-0.28
121	SLD 2	44	-194	5249	7.2	35.74	-0.28
121	SLD 3	47	-604	5398	23.43	38.4	-0.31
121	SLD 4	47	-604	5398	23.43	38.4	-0.31
121	SLD 5	27	379	5278	-15.51	19.26	-0.13
121	SLD 6	27	379	5278	-15.51	19.26	-0.13
121	SLD 7	37	-985	5772	38.61	28.12	-0.23
121	SLD 8	37	-985	5772	38.61	28.12	-0.23
121	SLD 9	15	462	5450	-18.73	7.79	-0.03
121	SLD 10	15	462	5450	-18.73	7.79	-0.03
121	SLD 11	25	-903	5944	35.38	16.66	-0.13
121	SLD 12	25	-903	5944	35.38	16.66	-0.13
121	SLD 13	4	80	5824	-3.55	-2.48	0.05
121	SLD 14	4	80	5824	-3.55	-2.48	0.05
121	SLD 15	7	-329	5973	12.68	0.18	0.02
121	SLD 16	7	-329	5973	12.68	0.18	0.02
121	SLV 1	69	-104	4760	3.52	59.51	-0.48
121	SLV 2	69	-104	4760	3.52	59.51	-0.48
121	SLV 3	76	-1065	5115	41.67	65.94	-0.55
121	SLV 4	76	-1065	5115	41.67	65.94	-0.55
121	SLV 5	27	1245	4818	-49.85	20.68	-0.13
121	SLV 6	27	1245	4818	-49.85	20.68	-0.13
121	SLV 7	52	-1962	6000	77.33	42.09	-0.36
121	SLV 8	52	-1962	6000	77.33	42.09	-0.36
121	SLV 9	-1	1438	5222	-57.45	-6.18	0.11
121	SLV 10	-1	1438	5222	-57.45	-6.18	0.11
121	SLV 11	24	-1768	6404	69.73	15.23	-0.13
121	SLV 12	24	-1768	6404	69.73	15.23	-0.13
121	SLV 13	-24	542	6107	-21.8	-30.02	0.3
121	SLV 14	-24	542	6107	-21.8	-30.02	0.3
121	SLV 15	-17	-420	6462	16.36	-23.6	0.23
121	SLV 16	-17	-420	6462	16.36	-23.6	0.23
122	SLU 1	40	613	6523	-10.14	29.58	-0.15

Nodo	Cont.	Reazione a traslazione			Reazione a rotazione		
Ind.	N.br.	x	y	z	x	y	z
122	SLU 2	36	652	6554	-11.5	25.6	-0.13
122	SLU 3	41	643	6689	-10.87	30.39	-0.15
122	SLU 4	38	667	6707	-11.69	28	-0.14
122	SLU 5	36	676	6647	-12.16	26.03	-0.13
122	SLU 6	41	667	6782	-11.53	30.81	-0.15
122	SLU 7	39	690	6801	-12.34	28.43	-0.14
122	SLU 8	41	660	6710	-11.45	30.44	-0.15
122	SLU 9	38	684	6728	-12.27	28.05	-0.14
122	SLU 10	41	739	7339	-13.02	29.52	-0.15
122	SLU 11	46	730	7474	-12.39	34.31	-0.17
122	SLU 12	44	754	7493	-13.2	31.92	-0.16
122	SLU 13	42	763	7432	-13.68	29.95	-0.15
122	SLU 14	47	754	7568	-13.04	34.74	-0.17
122	SLU 15	44	777	7586	-13.86	32.35	-0.16
122	SLU 16	46	747	7495	-12.97	34.36	-0.17
122	SLU 17	44	771	7514	-13.79	31.97	-0.16
122	SLU 18	47	737	7645	-12.31	35.19	-0.17
122	SLU 19	45	761	7663	-13.13	32.8	-0.16
122	SLU 20	48	761	7738	-12.96	35.62	-0.17
122	SLU 21	45	785	7757	-13.78	33.23	-0.17
122	SLU 22	45	702	7280	-11.78	33.37	-0.16
122	SLU 23	41	741	7311	-13.14	29.39	-0.15
122	SLU 24	46	732	7446	-12.51	34.17	-0.17
122	SLU 25	43	756	7464	-13.33	31.78	-0.16
122	SLU 26	41	765	7404	-13.8	29.81	-0.15
122	SLU 27	46	756	7539	-13.16	34.6	-0.17
122	SLU 28	44	780	7557	-13.98	32.21	-0.16
122	SLU 29	46	750	7467	-13.09	34.22	-0.17
122	SLU 30	44	773	7485	-13.91	31.83	-0.16
122	SLU 31	46	829	8096	-14.66	33.31	-0.17
122	SLU 32	51	820	8231	-14.03	38.1	-0.19
122	SLU 33	49	843	8249	-14.84	35.71	-0.18
122	SLU 34	47	852	8189	-15.31	33.74	-0.17
122	SLU 35	52	843	8324	-14.68	38.53	-0.19
122	SLU 36	49	867	8343	-15.5	36.14	-0.18
122	SLU 37	51	837	8252	-14.61	38.15	-0.19
122	SLU 38	49	860	8270	-15.42	35.76	-0.18
122	SLU 39	52	827	8402	-13.95	38.97	-0.19
122	SLU 40	50	850	8420	-14.76	36.59	-0.18
122	SLU 41	53	850	8495	-14.6	39.4	-0.19
122	SLU 42	50	874	8514	-15.42	37.01	-0.19
122	SLU 43	50	766	8221	-12.62	37.16	-0.18
122	SLU 44	46	805	8251	-13.99	33.18	-0.17
122	SLU 45	51	796	8387	-13.35	37.96	-0.19
122	SLU 46	49	820	8405	-14.17	35.57	-0.18
122	SLU 47	46	829	8345	-14.64	33.6	-0.17
122	SLU 48	51	820	8480	-14.01	38.39	-0.19
122	SLU 49	49	843	8498	-14.82	36	-0.18
122	SLU 50	51	813	8407	-13.93	38.01	-0.19
122	SLU 51	49	837	8426	-14.75	35.62	-0.18
122	SLU 52	51	892	9037	-15.5	37.1	-0.19
122	SLU 53	56	883	9172	-14.87	41.89	-0.21
122	SLU 54	54	907	9190	-15.69	39.5	-0.2
122	SLU 55	52	916	9130	-16.16	37.53	-0.19
122	SLU 56	57	907	9265	-15.52	42.32	-0.21
122	SLU 57	54	931	9283	-16.34	39.93	-0.2
122	SLU 58	56	901	9193	-15.45	41.94	-0.21
122	SLU 59	54	924	9211	-16.27	39.55	-0.2
122	SLU 60	57	891	9343	-14.79	42.76	-0.21
122	SLU 61	55	914	9361	-15.61	40.37	-0.2
122	SLU 62	58	914	9436	-15.44	43.19	-0.21
122	SLU 63	56	938	9454	-16.26	40.8	-0.2
122	SLU 64	55	856	8978	-14.26	40.94	-0.2
122	SLU 65	51	895	9008	-15.62	36.96	-0.19
122	SLU 66	56	886	9143	-14.99	41.75	-0.21
122	SLU 67	54	909	9162	-15.81	39.36	-0.2
122	SLU 68	52	918	9101	-16.28	37.39	-0.19
122	SLU 69	56	909	9237	-15.65	42.18	-0.21
122	SLU 70	54	933	9255	-16.46	39.79	-0.2
122	SLU 71	56	903	9164	-15.57	41.8	-0.21
122	SLU 72	54	926	9183	-16.39	39.41	-0.2
122	SLU 73	56	982	9793	-17.14	40.89	-0.21
122	SLU 74	61	973	9929	-16.51	45.67	-0.22
122	SLU 75	59	996	9947	-17.32	43.29	-0.22
122	SLU 76	57	1005	9887	-17.8	41.31	-0.21
122	SLU 77	62	996	10022	-17.16	46.1	-0.23
122	SLU 78	59	1020	10040	-17.98	43.71	-0.22
122	SLU 79	61	990	9950	-17.09	45.72	-0.22
122	SLU 80	59	1014	9968	-17.91	43.33	-0.22
122	SLU 81	62	980	10099	-16.43	46.55	-0.23
122	SLU 82	60	1003	10118	-17.25	44.16	-0.22
122	SLU 83	63	1004	10193	-17.08	46.98	-0.23
122	SLU 84	61	1027	10211	-17.9	44.59	-0.22
122	SLE RA 1	41	638	6740	-10.61	30.66	-0.15
122	SLE RA 2	38	665	6760	-11.52	28.01	-0.14
122	SLE RA 3	42	659	6850	-11.1	31.2	-0.15
122	SLE RA 4	40	674	6862	-11.64	29.61	-0.15
122	SLE RA 5	39	680	6822	-11.96	28.29	-0.14
122	SLE RA 6	42	674	6912	-11.53	31.48	-0.15
122	SLE RA 7	41	690	6924	-12.08	29.89	-0.15

Nodo	Cont.	Reazione a traslazione			Reazione a rotazione		
Ind.	N.br.	x	y	z	x	y	z
122	SLE RA 8	42	670	6864	-11.48	31.23	-0.15
122	SLE RA 9	40	686	6876	-12.03	29.64	-0.15
122	SLE RA 10	42	723	7283	-12.53	30.62	-0.15
122	SLE RA 11	45	717	7374	-12.11	33.82	-0.17
122	SLE RA 12	44	732	7386	-12.65	32.22	-0.16
122	SLE RA 13	42	738	7346	-12.97	30.91	-0.16
122	SLE RA 14	46	732	7436	-12.54	34.1	-0.17
122	SLE RA 15	44	748	7448	-13.09	32.51	-0.16
122	SLE RA 16	45	728	7387	-12.5	33.85	-0.17
122	SLE RA 17	44	744	7400	-13.04	32.26	-0.16
122	SLE RA 18	46	721	7487	-12.05	34.4	-0.17
122	SLE RA 19	45	737	7500	-12.6	32.81	-0.16
122	SLE RA 20	46	737	7550	-12.49	34.69	-0.17
122	SLE RA 21	45	753	7562	-13.04	33.09	-0.16
122	SLE FR 1	41	638	6740	-10.61	30.66	-0.15
122	SLE FR 2	41	644	6744	-10.79	30.13	-0.15
122	SLE FR 3	41	645	6764	-10.79	30.78	-0.15
122	SLE FR 4	42	669	6968	-11.23	31.25	-0.15
122	SLE FR 5	43	670	6989	-11.22	31.9	-0.16
122	SLE FR 6	44	680	7113	-11.33	32.53	-0.16
122	SLE QP 1	41	638	6740	-10.61	30.66	-0.15
122	SLE QP 2	43	663	6964	-11.04	31.78	-0.16
122	SLD 1	93	947	8627	-18.57	69.55	-0.34
122	SLD 2	93	947	8627	-18.57	69.55	-0.34
122	SLD 3	84	606	8149	-8.13	62.79	-0.31
122	SLD 4	84	606	8149	-8.13	62.79	-0.31
122	SLD 5	71	1266	8187	-29.14	53.36	-0.26
122	SLD 6	71	1266	8187	-29.14	53.36	-0.26
122	SLD 7	41	128	6595	5.67	30.84	-0.15
122	SLD 8	41	128	6595	5.67	30.84	-0.15
122	SLD 9	44	1198	7333	-27.76	32.72	-0.16
122	SLD 10	44	1198	7333	-27.76	32.72	-0.16
122	SLD 11	14	60	5740	7.05	10.21	-0.05
122	SLD 12	14	60	5740	7.05	10.21	-0.05
122	SLD 13	2	721	5778	-13.96	0.77	-0.01
122	SLD 14	2	721	5778	-13.96	0.77	-0.01
122	SLD 15	-7	379	5301	-3.52	-5.98	0.03
122	SLD 16	-7	379	5301	-3.52	-5.98	0.03
122	SLV 1	160	1328	10862	-28.67	120.26	-0.59
122	SLV 2	160	1328	10862	-28.67	120.26	-0.59
122	SLV 3	138	533	9735	-4.36	104.27	-0.51
122	SLV 4	138	533	9735	-4.36	104.27	-0.51
122	SLV 5	110	2068	9844	-53.2	82.57	-0.4
122	SLV 6	110	2068	9844	-53.2	82.57	-0.4
122	SLV 7	39	-581	6085	27.83	29.29	-0.15
122	SLV 8	39	-581	6085	27.83	29.29	-0.15
122	SLV 9	46	1908	7843	-49.92	34.28	-0.17
122	SLV 10	46	1908	7843	-49.92	34.28	-0.17
122	SLV 11	-25	-741	4084	31.11	-19.01	0.09
122	SLV 12	-25	-741	4084	31.11	-19.01	0.09
122	SLV 13	-53	793	4193	-17.73	-40.71	0.2
122	SLV 14	-53	793	4193	-17.73	-40.71	0.2
122	SLV 15	-75	-1	3065	6.58	-56.69	0.27
122	SLV 16	-75	-1	3065	6.58	-56.69	0.27
123	SLU 1	15	50	3022	-4.84	10.68	0
123	SLU 2	15	276	3008	-12.99	11.11	0
123	SLU 3	16	60	3098	-5.48	11.01	0
123	SLU 4	16	195	3090	-10.37	11.27	0
123	SLU 5	16	284	3054	-13.56	11.31	0
123	SLU 6	16	68	3144	-6.05	11.2	0
123	SLU 7	16	203	3135	-10.94	11.46	0
123	SLU 8	16	67	3113	-5.97	11.07	0
123	SLU 9	16	203	3105	-10.86	11.33	0
123	SLU 10	18	289	3419	-14.13	12.79	0
123	SLU 11	18	72	3509	-6.62	12.69	0
123	SLU 12	18	208	3501	-11.51	12.95	0
123	SLU 13	18	297	3465	-14.69	12.99	0
123	SLU 14	18	81	3555	-7.18	12.88	0
123	SLU 15	18	216	3546	-12.07	13.14	0
123	SLU 16	18	80	3525	-7.11	12.75	0
123	SLU 17	18	216	3516	-12	13.01	0
123	SLU 18	19	68	3610	-6.47	13.08	0
123	SLU 19	19	204	3601	-11.36	13.34	0
123	SLU 20	19	77	3655	-7.03	13.28	0
123	SLU 21	19	212	3647	-11.92	13.54	0
123	SLU 22	17	67	3406	-6.21	12.27	0
123	SLU 23	18	293	3392	-14.36	12.71	0
123	SLU 24	18	76	3482	-6.85	12.6	0
123	SLU 25	18	212	3474	-11.74	12.86	0
123	SLU 26	18	301	3438	-14.92	12.9	0
123	SLU 27	18	85	3528	-7.41	12.79	0
123	SLU 28	18	220	3519	-12.3	13.05	0
123	SLU 29	18	84	3497	-7.33	12.66	0
123	SLU 30	18	220	3489	-12.22	12.92	0
123	SLU 31	20	305	3803	-15.5	14.39	0
123	SLU 32	20	89	3893	-7.99	14.28	0
123	SLU 33	20	224	3885	-12.88	14.54	0
123	SLU 34	20	314	3849	-16.06	14.58	0
123	SLU 35	21	98	3939	-8.55	14.48	0
123	SLU 36	21	233	3930	-13.44	14.74	0

Nodo	Cont.	Reazione a traslazione			Reazione a rotazione		
Ind.	N.br.	x	y	z	x	y	z
123	SLU 37	20	97	3909	-8.47	14.34	0
123	SLU 38	21	232	3900	-13.36	14.6	0
123	SLU 39	21	85	3994	-7.83	14.68	0
123	SLU 40	21	221	3985	-12.73	14.94	0
123	SLU 41	21	94	4039	-8.4	14.87	0
123	SLU 42	21	229	4031	-13.29	15.13	0
123	SLU 43	19	60	3798	-5.83	13.33	0
123	SLU 44	19	285	3783	-13.98	13.77	0
123	SLU 45	19	69	3873	-6.47	13.66	0
123	SLU 46	20	204	3865	-11.36	13.92	0
123	SLU 47	20	294	3829	-14.54	13.96	0
123	SLU 48	20	77	3919	-7.03	13.86	0
123	SLU 49	20	213	3910	-11.92	14.12	0
123	SLU 50	19	77	3888	-6.95	13.72	0
123	SLU 51	20	212	3880	-11.84	13.98	0
123	SLU 52	22	298	4195	-15.12	15.45	0
123	SLU 53	22	82	4285	-7.61	15.35	0
123	SLU 54	22	217	4276	-12.5	15.61	0
123	SLU 55	22	306	4240	-15.68	15.65	0
123	SLU 56	22	90	4330	-8.17	15.54	0
123	SLU 57	22	225	4322	-13.06	15.8	0
123	SLU 58	22	90	4300	-8.09	15.41	0
123	SLU 59	22	225	4291	-12.98	15.67	0
123	SLU 60	22	78	4385	-7.45	15.74	0
123	SLU 61	23	213	4377	-12.35	16	0
123	SLU 62	23	86	4430	-8.02	15.93	0
123	SLU 63	23	222	4422	-12.91	16.19	0
123	SLU 64	21	76	4181	-7.19	14.93	0
123	SLU 65	22	302	4167	-15.34	15.36	0
123	SLU 66	22	86	4257	-7.83	15.26	0
123	SLU 67	22	221	4249	-12.72	15.52	0
123	SLU 68	22	311	4213	-15.91	15.56	0
123	SLU 69	22	94	4303	-8.4	15.45	0
123	SLU 70	22	230	4294	-13.29	15.71	0
123	SLU 71	22	94	4272	-8.32	15.32	0
123	SLU 72	22	229	4264	-13.21	15.58	0
123	SLU 73	24	315	4578	-16.48	17.05	0
123	SLU 74	24	98	4668	-8.97	16.94	0
123	SLU 75	24	234	4660	-13.86	17.2	0
123	SLU 76	24	323	4624	-17.04	17.24	0
123	SLU 77	24	107	4714	-9.53	17.13	0
123	SLU 78	25	242	4705	-14.42	17.39	0
123	SLU 79	24	106	4684	-9.46	17	0
123	SLU 80	24	242	4675	-14.35	17.26	0
123	SLU 81	25	95	4769	-8.82	17.33	0
123	SLU 82	25	230	4760	-13.71	17.59	0
123	SLU 83	25	103	4814	-9.38	17.53	0
123	SLU 84	25	239	4806	-14.27	17.79	0
123	SLE RA 1	16	55	3132	-5.23	11.13	0
123	SLE RA 2	16	205	3123	-10.67	11.42	0
123	SLE RA 3	16	61	3183	-5.66	11.35	0
123	SLE RA 4	16	151	3177	-8.92	11.53	0
123	SLE RA 5	16	211	3153	-11.04	11.55	0
123	SLE RA 6	16	67	3213	-6.03	11.48	0
123	SLE RA 7	16	157	3207	-9.3	11.65	0
123	SLE RA 8	16	67	3193	-5.98	11.39	0
123	SLE RA 9	16	157	3187	-9.24	11.56	0
123	SLE RA 10	18	214	3397	-11.43	12.54	0
123	SLE RA 11	18	70	3457	-6.42	12.47	0
123	SLE RA 12	18	160	3451	-9.68	12.65	0
123	SLE RA 13	18	220	3427	-11.8	12.67	0
123	SLE RA 14	18	75	3487	-6.79	12.6	0
123	SLE RA 15	18	166	3481	-10.05	12.78	0
123	SLE RA 16	18	75	3467	-6.74	12.51	0
123	SLE RA 17	18	165	3461	-10	12.69	0
123	SLE RA 18	18	67	3524	-6.32	12.74	0
123	SLE RA 19	18	157	3518	-9.58	12.91	0
123	SLE RA 20	18	73	3554	-6.69	12.87	0
123	SLE RA 21	18	163	3548	-9.95	13.04	0
123	SLE FR 1	16	55	3132	-5.23	11.13	0
123	SLE FR 2	16	85	3130	-6.32	11.19	0
123	SLE FR 3	16	57	3144	-5.38	11.18	0
123	SLE FR 4	17	89	3248	-6.65	11.67	0
123	SLE FR 5	17	61	3262	-5.71	11.67	0
123	SLE FR 6	17	61	3328	-5.78	11.93	0
123	SLE QP 1	16	55	3132	-5.23	11.13	0
123	SLE QP 2	16	59	3250	-5.56	11.61	0
123	SLD 1	31	418	3531	-18.21	22.8	0
123	SLD 2	31	418	3531	-18.21	22.8	0
123	SLD 3	28	38	3393	-4.79	20.49	0
123	SLD 4	28	38	3393	-4.79	20.49	0
123	SLD 5	25	742	3544	-29.72	18.47	0
123	SLD 6	25	742	3544	-29.72	18.47	0
123	SLD 7	15	-523	3082	15.03	10.78	0
123	SLD 8	15	-523	3082	15.03	10.78	0
123	SLD 9	18	641	3417	-26.15	12.45	0.01
123	SLD 10	18	641	3417	-26.15	12.45	0.01
123	SLD 11	8	-625	2955	18.6	4.76	0
123	SLD 12	8	-625	2955	18.6	4.76	0
123	SLD 13	5	79	3107	-6.33	2.73	0

Nodo	Cont.	Reazione a traslazione			Reazione a rotazione		
Ind.	N.br.	x	y	z	x	y	z
123	SLD 14	5	79	3107	-6.33	2.73	0
123	SLD 15	2	-300	2968	7.1	0.43	0
123	SLD 16	2	-300	2968	7.1	0.43	0
123	SLV 1	50	918	3913	-35.78	38	0
123	SLV 2	50	918	3913	-35.78	38	0
123	SLV 3	43	5	3585	-3.58	32.3	0
123	SLV 4	43	5	3585	-3.58	32.3	0
123	SLV 5	38	1701	3946	-63.46	28.17	0.01
123	SLV 6	38	1701	3946	-63.46	28.17	0.01
123	SLV 7	13	-1342	2853	43.87	9.18	0
123	SLV 8	13	-1342	2853	43.87	9.18	0
123	SLV 9	20	1460	3646	-54.99	14.05	0.01
123	SLV 10	20	1460	3646	-54.99	14.05	0.01
123	SLV 11	-5	-1584	2553	52.34	-4.94	0
123	SLV 12	-5	-1584	2553	52.34	-4.94	0
123	SLV 13	-10	113	2915	-7.53	-9.07	0.01
123	SLV 14	-10	113	2915	-7.53	-9.07	0.01
123	SLV 15	-17	-800	2587	24.67	-14.77	0
123	SLV 16	-17	-800	2587	24.67	-14.77	0
124	SLU 1	4	-203	5889	-2.01	4.21	-0.01
124	SLU 2	4	-308	5979	1.83	4.42	-0.01
124	SLU 3	4	-202	6052	-2.49	4.36	-0.01
124	SLU 4	5	-265	6106	-0.19	4.49	-0.02
124	SLU 5	5	-306	6089	1.46	4.51	-0.02
124	SLU 6	5	-201	6161	-2.86	4.46	-0.02
124	SLU 7	5	-263	6216	-0.56	4.58	-0.02
124	SLU 8	5	-200	6107	-2.74	4.4	-0.01
124	SLU 9	5	-263	6162	-0.43	4.52	-0.02
124	SLU 10	2	-319	6849	0.6	2.68	-0.01
124	SLU 11	2	-213	6922	-3.73	2.63	-0.01
124	SLU 12	2	-276	6976	-1.42	2.75	-0.01
124	SLU 13	2	-317	6959	0.23	2.78	-0.01
124	SLU 14	2	-212	7031	-4.09	2.72	-0.01
124	SLU 15	2	-274	7086	-1.79	2.85	-0.01
124	SLU 16	2	-212	6977	-3.97	2.66	-0.01
124	SLU 17	2	-274	7032	-1.66	2.79	-0.01
124	SLU 18	1	-219	7132	-3.77	1.73	0
124	SLU 19	1	-282	7186	-1.47	1.86	0
124	SLU 20	1	-218	7241	-4.13	1.82	0
124	SLU 21	1	-280	7295	-1.83	1.95	0
124	SLU 22	4	-210	6592	-3.34	4.29	-0.01
124	SLU 23	4	-314	6682	0.49	4.5	-0.01
124	SLU 24	4	-209	6755	-3.83	4.45	-0.01
124	SLU 25	5	-271	6809	-1.53	4.57	-0.01
124	SLU 26	5	-313	6792	0.13	4.59	-0.01
124	SLU 27	5	-207	6864	-4.19	4.54	-0.01
124	SLU 28	5	-270	6918	-1.89	4.66	-0.02
124	SLU 29	4	-207	6810	-4.07	4.48	-0.01
124	SLU 30	5	-269	6865	-1.77	4.6	-0.01
124	SLU 31	2	-325	7552	-0.74	2.76	0
124	SLU 32	2	-220	7625	-5.06	2.71	0
124	SLU 33	2	-282	7679	-2.76	2.83	-0.01
124	SLU 34	2	-324	7662	-1.1	2.86	-0.01
124	SLU 35	2	-218	7734	-5.42	2.8	-0.01
124	SLU 36	2	-281	7788	-3.12	2.93	-0.01
124	SLU 37	2	-218	7680	-5.3	2.74	0
124	SLU 38	2	-281	7735	-3	2.87	-0.01
124	SLU 39	1	-226	7835	-5.1	1.81	0
124	SLU 40	1	-288	7889	-2.8	1.94	0
124	SLU 41	1	-224	7944	-5.47	1.91	0
124	SLU 42	1	-287	7998	-3.16	2.03	0
124	SLU 43	6	-262	7414	-2.15	5.45	-0.02
124	SLU 44	6	-366	7505	1.68	5.65	-0.02
124	SLU 45	6	-261	7577	-2.64	5.6	-0.02
124	SLU 46	6	-323	7632	-0.34	5.72	-0.02
124	SLU 47	6	-365	7614	1.32	5.75	-0.02
124	SLU 48	6	-259	7687	-3	5.69	-0.02
124	SLU 49	6	-322	7741	-0.7	5.82	-0.02
124	SLU 50	6	-259	7633	-2.88	5.63	-0.02
124	SLU 51	6	-322	7687	-0.58	5.76	-0.02
124	SLU 52	3	-378	8375	0.45	3.92	-0.01
124	SLU 53	3	-272	8448	-3.87	3.86	-0.01
124	SLU 54	4	-335	8502	-1.57	3.99	-0.01
124	SLU 55	4	-376	8484	0.09	4.01	-0.01
124	SLU 56	4	-271	8557	-4.23	3.96	-0.01
124	SLU 57	4	-333	8611	-1.93	4.08	-0.01
124	SLU 58	3	-270	8503	-4.11	3.9	-0.01
124	SLU 59	4	-333	8557	-1.81	4.02	-0.01
124	SLU 60	2	-278	8657	-3.91	2.97	0
124	SLU 61	2	-341	8712	-1.61	3.09	-0.01
124	SLU 62	2	-277	8766	-4.28	3.06	-0.01
124	SLU 63	2	-339	8821	-1.97	3.18	-0.01
124	SLU 64	6	-269	8117	-3.49	5.53	-0.02
124	SLU 65	6	-373	8208	0.35	5.74	-0.02
124	SLU 66	6	-267	8280	-3.97	5.68	-0.02
124	SLU 67	6	-330	8335	-1.67	5.81	-0.02
124	SLU 68	6	-371	8317	-0.02	5.83	-0.02
124	SLU 69	6	-266	8390	-4.34	5.77	-0.02
124	SLU 70	6	-328	8444	-2.04	5.9	-0.02
124	SLU 71	6	-266	8336	-4.22	5.72	-0.02

Nodo	Cont.	Reazione a traslazione			Reazione a rotazione		
Ind.	N.br.	x	y	z	x	y	z
124	SLU 72	6	-328	8390	-1.91	5.84	-0.02
124	SLU 73	3	-384	9078	-0.88	4	-0.01
124	SLU 74	3	-278	9150	-5.21	3.94	-0.01
124	SLU 75	4	-341	9205	-2.9	4.07	-0.01
124	SLU 76	4	-382	9187	-1.25	4.09	-0.01
124	SLU 77	4	-277	9260	-5.57	4.04	-0.01
124	SLU 78	4	-340	9314	-3.27	4.16	-0.01
124	SLU 79	3	-277	9206	-5.45	3.98	-0.01
124	SLU 80	4	-339	9260	-3.14	4.1	-0.01
124	SLU 81	2	-285	9360	-5.25	3.05	0
124	SLU 82	2	-347	9415	-2.95	3.17	0
124	SLU 83	2	-283	9469	-5.61	3.14	0
124	SLU 84	2	-346	9524	-3.31	3.27	-0.01
124	SLE RA 1	4	-205	6090	-2.39	4.23	-0.01
124	SLE RA 2	4	-275	6150	0.17	4.37	-0.01
124	SLE RA 3	4	-204	6198	-2.71	4.34	-0.01
124	SLE RA 4	4	-246	6235	-1.18	4.42	-0.01
124	SLE RA 5	4	-274	6223	-0.07	4.44	-0.01
124	SLE RA 6	4	-203	6271	-2.96	4.4	-0.01
124	SLE RA 7	5	-245	6307	-1.42	4.48	-0.01
124	SLE RA 8	4	-203	6235	-2.87	4.36	-0.01
124	SLE RA 9	5	-245	6271	-1.34	4.44	-0.01
124	SLE RA 10	3	-282	6730	-0.65	3.22	-0.01
124	SLE RA 11	3	-212	6778	-3.53	3.18	-0.01
124	SLE RA 12	3	-253	6815	-2	3.26	-0.01
124	SLE RA 13	3	-281	6803	-0.9	3.28	-0.01
124	SLE RA 14	3	-211	6851	-3.78	3.24	-0.01
124	SLE RA 15	3	-252	6887	-2.24	3.32	-0.01
124	SLE RA 16	3	-211	6815	-3.7	3.2	-0.01
124	SLE RA 17	3	-252	6851	-2.16	3.28	-0.01
124	SLE RA 18	2	-216	6918	-3.56	2.58	0
124	SLE RA 19	2	-258	6954	-2.03	2.66	-0.01
124	SLE RA 20	2	-215	6991	-3.8	2.64	-0.01
124	SLE RA 21	2	-257	7027	-2.27	2.73	-0.01
124	SLE FR 1	4	-205	6090	-2.39	4.23	-0.01
124	SLE FR 2	4	-219	6102	-1.88	4.26	-0.01
124	SLE FR 3	4	-205	6119	-2.49	4.26	-0.01
124	SLE FR 4	4	-222	6350	-2.23	3.77	-0.01
124	SLE FR 5	4	-208	6367	-2.84	3.76	-0.01
124	SLE FR 6	3	-211	6504	-2.98	3.41	-0.01
124	SLE QP 1	4	-205	6090	-2.39	4.23	-0.01
124	SLE QP 2	4	-208	6338	-2.74	3.74	-0.01
124	SLD 1	34	156	6558	-16.37	30.26	-0.12
124	SLD 2	34	156	6558	-16.37	30.26	-0.12
124	SLD 3	37	-263	6753	-1.08	33.15	-0.13
124	SLD 4	37	-263	6753	-1.08	33.15	-0.13
124	SLD 5	8	537	6109	-30.01	7.32	-0.03
124	SLD 6	8	537	6109	-30.01	7.32	-0.03
124	SLD 7	18	-861	6758	20.94	16.94	-0.07
124	SLD 8	18	-861	6758	20.94	16.94	-0.07
124	SLD 9	-11	444	5919	-26.42	-9.46	0.04
124	SLD 10	-11	444	5919	-26.42	-9.46	0.04
124	SLD 11	-1	-954	6567	24.53	0.16	0
124	SLD 12	-1	-954	6567	24.53	0.16	0
124	SLD 13	-30	-153	5923	-4.4	-25.67	0.11
124	SLD 14	-30	-153	5923	-4.4	-25.67	0.11
124	SLD 15	-27	-573	6118	10.89	-22.78	0.1
124	SLD 16	-27	-573	6118	10.89	-22.78	0.1
124	SLV 1	74	648	6851	-34.76	65.83	-0.27
124	SLV 2	74	648	6851	-34.76	65.83	-0.27
124	SLV 3	82	-337	7320	1.15	72.63	-0.29
124	SLV 4	82	-337	7320	1.15	72.63	-0.29
124	SLV 5	13	1543	5782	-66.81	12.06	-0.05
124	SLV 6	13	1543	5782	-66.81	12.06	-0.05
124	SLV 7	39	-1742	7343	52.89	34.71	-0.14
124	SLV 8	39	-1742	7343	52.89	34.71	-0.14
124	SLV 9	-31	1325	5333	-58.37	-27.23	0.12
124	SLV 10	-31	1325	5333	-58.37	-27.23	0.12
124	SLV 11	-6	-1960	6895	61.33	-4.58	0.02
124	SLV 12	-6	-1960	6895	61.33	-4.58	0.02
124	SLV 13	-74	-79	5357	-6.63	-65.15	0.27
124	SLV 14	-74	-79	5357	-6.63	-65.15	0.27
124	SLV 15	-67	-1065	5825	29.28	-58.36	0.24
124	SLV 16	-67	-1065	5825	29.28	-58.36	0.24
125	SLU 1	0	-27	4145	9.99	-0.39	0
125	SLU 2	-1	197	4120	0.59	-1	0
125	SLU 3	0	-23	4255	10.52	-0.41	0
125	SLU 4	-1	111	4240	4.88	-0.78	0
125	SLU 5	-1	201	4185	0.93	-1.02	0
125	SLU 6	0	-19	4320	10.86	-0.42	0
125	SLU 7	-1	115	4305	5.22	-0.79	0
125	SLU 8	0	-18	4274	10.67	-0.42	0
125	SLU 9	-1	117	4259	5.03	-0.79	0
125	SLU 10	-1	193	4726	2.77	-1.06	0
125	SLU 11	0	-27	4861	12.7	-0.46	0
125	SLU 12	-1	107	4846	7.06	-0.83	0
125	SLU 13	-1	197	4791	3.11	-1.08	0
125	SLU 14	0	-23	4926	13.03	-0.48	0
125	SLU 15	-1	111	4911	7.4	-0.85	0
125	SLU 16	0	-22	4880	12.84	-0.47	0

Nodo	Cont.	Reazione a traslazione			Reazione a rotazione		
Ind.	N.br.	x	y	z	x	y	z
125	SLU 17	-1	113	4865	7.2	-0.84	0
125	SLU 18	0	-33	5011	13.1	-0.47	0
125	SLU 19	-1	101	4996	7.46	-0.84	0
125	SLU 20	0	-28	5076	13.44	-0.48	0
125	SLU 21	-1	106	5061	7.8	-0.85	0
125	SLU 22	0	-28	4710	12.09	-0.44	0
125	SLU 23	-1	195	4684	2.69	-1.06	0
125	SLU 24	0	-25	4820	12.62	-0.46	0
125	SLU 25	-1	109	4805	6.98	-0.83	0
125	SLU 26	-1	200	4749	3.03	-1.08	0
125	SLU 27	0	-20	4884	12.96	-0.48	0
125	SLU 28	-1	114	4869	7.32	-0.85	0
125	SLU 29	0	-19	4839	12.77	-0.47	0
125	SLU 30	-1	115	4824	7.13	-0.84	0
125	SLU 31	-1	191	5291	4.87	-1.12	0
125	SLU 32	0	-29	5426	14.8	-0.52	0
125	SLU 33	-1	105	5411	9.16	-0.89	0
125	SLU 34	-1	196	5355	5.21	-1.13	0
125	SLU 35	0	-24	5491	15.14	-0.54	0
125	SLU 36	-1	110	5475	9.5	-0.91	0
125	SLU 37	0	-23	5445	14.95	-0.53	0
125	SLU 38	-1	111	5430	9.31	-0.9	0
125	SLU 39	0	-34	5576	15.2	-0.52	0
125	SLU 40	-1	100	5560	9.56	-0.9	0
125	SLU 41	0	-29	5640	15.54	-0.54	0
125	SLU 42	-1	105	5625	9.9	-0.91	0
125	SLU 43	0	-35	5195	12.27	-0.48	0
125	SLU 44	-1	189	5170	2.87	-1.1	0
125	SLU 45	0	-31	5305	12.8	-0.5	0
125	SLU 46	-1	103	5290	7.16	-0.87	0
125	SLU 47	-1	194	5235	3.21	-1.11	0
125	SLU 48	0	-26	5370	13.14	-0.52	0
125	SLU 49	-1	108	5355	7.5	-0.89	0
125	SLU 50	0	-25	5324	12.94	-0.51	0
125	SLU 51	-1	109	5309	7.3	-0.88	0
125	SLU 52	-1	185	5776	5.04	-1.16	0
125	SLU 53	0	-35	5911	14.97	-0.56	0
125	SLU 54	-1	99	5896	9.33	-0.93	0
125	SLU 55	-1	190	5841	5.38	-1.17	0
125	SLU 56	0	-30	5976	15.31	-0.57	0
125	SLU 57	-1	104	5961	9.67	-0.95	0
125	SLU 58	0	-29	5930	15.12	-0.57	0
125	SLU 59	-1	105	5915	9.48	-0.94	0
125	SLU 60	0	-40	6061	15.37	-0.56	0
125	SLU 61	-1	94	6046	9.73	-0.93	0
125	SLU 62	0	-36	6126	15.71	-0.58	0
125	SLU 63	-1	98	6111	10.07	-0.95	0
125	SLU 64	0	-36	5760	14.37	-0.54	0
125	SLU 65	-1	188	5734	4.97	-1.16	0
125	SLU 66	0	-32	5870	14.9	-0.56	0
125	SLU 67	-1	102	5855	9.26	-0.93	0
125	SLU 68	-1	192	5799	5.31	-1.17	0
125	SLU 69	0	-28	5934	15.24	-0.57	0
125	SLU 70	-1	107	5919	9.6	-0.94	0
125	SLU 71	0	-27	5889	15.05	-0.57	0
125	SLU 72	-1	108	5874	9.41	-0.94	0
125	SLU 73	-1	184	6341	7.14	-1.21	0
125	SLU 74	0	-36	6476	17.07	-0.62	0
125	SLU 75	-1	98	6461	11.44	-0.99	0
125	SLU 76	-1	188	6405	7.48	-1.23	0
125	SLU 77	0	-32	6541	17.41	-0.63	0
125	SLU 78	-1	102	6525	11.77	-1	0
125	SLU 79	0	-31	6495	17.22	-0.63	0
125	SLU 80	-1	104	6480	11.58	-1	0
125	SLU 81	0	-42	6626	17.48	-0.62	0
125	SLU 82	-1	92	6610	11.84	-0.99	0
125	SLU 83	0	-37	6690	17.82	-0.64	0
125	SLU 84	-1	97	6675	12.18	-1.01	0
125	SLE RA 1	0	-27	4306	10.59	-0.4	0
125	SLE RA 2	-1	122	4290	4.32	-0.81	0
125	SLE RA 3	0	-25	4380	10.94	-0.42	0
125	SLE RA 4	-1	64	4370	7.18	-0.66	0
125	SLE RA 5	-1	125	4333	4.55	-0.82	0
125	SLE RA 6	0	-22	4423	11.17	-0.43	0
125	SLE RA 7	-1	68	4413	7.41	-0.67	0
125	SLE RA 8	0	-21	4393	11.04	-0.42	0
125	SLE RA 9	-1	68	4382	7.28	-0.67	0
125	SLE RA 10	-1	119	4694	5.77	-0.85	0
125	SLE RA 11	0	-28	4784	12.39	-0.45	0
125	SLE RA 12	-1	62	4774	8.63	-0.7	0
125	SLE RA 13	-1	122	4737	6	-0.86	0
125	SLE RA 14	0	-25	4827	12.62	-0.46	0
125	SLE RA 15	-1	65	4817	8.86	-0.71	0
125	SLE RA 16	0	-24	4797	12.49	-0.46	0
125	SLE RA 17	-1	66	4787	8.73	-0.71	0
125	SLE RA 18	0	-31	4884	12.66	-0.46	0
125	SLE RA 19	-1	58	4874	8.9	-0.7	0
125	SLE RA 20	0	-28	4927	12.89	-0.47	0
125	SLE RA 21	-1	61	4917	9.13	-0.71	0
125	SLE FR 1	0	-27	4306	10.59	-0.4	0

Nodo	Cont.	Reazione a traslazione			Reazione a rotazione		
Ind.	N.br.	x	y	z	x	y	z
125	SLE FR 2	0	2	4303	9.34	-0.48	0
125	SLE FR 3	0	-26	4324	10.68	-0.41	0
125	SLE FR 4	0	1	4476	9.96	-0.5	0
125	SLE FR 5	0	-27	4497	11.3	-0.42	0
125	SLE FR 6	0	-29	4595	11.63	-0.43	0
125	SLE QP 1	0	-27	4306	10.59	-0.4	0
125	SLE QP 2	0	-29	4480	11.21	-0.42	0
125	SLD 1	7	323	4500	-3.68	6.14	0
125	SLD 2	7	323	4500	-3.68	6.14	0
125	SLD 3	9	-68	4301	12.94	7.83	-0.01
125	SLD 4	9	-68	4301	12.94	7.83	-0.01
125	SLD 5	-1	669	4787	-18.46	-1.01	0
125	SLD 6	-1	669	4787	-18.46	-1.01	0
125	SLD 7	5	-632	4125	36.94	4.62	0
125	SLD 8	5	-632	4125	36.94	4.62	0
125	SLD 9	-6	575	4835	-14.51	-5.46	0
125	SLD 10	-6	575	4835	-14.51	-5.46	0
125	SLD 11	0	-726	4172	40.89	0.18	0
125	SLD 12	0	-726	4172	40.89	0.18	0
125	SLD 13	-10	11	4658	9.49	-8.67	0.01
125	SLD 14	-10	11	4658	9.49	-8.67	0.01
125	SLD 15	-8	-380	4460	26.11	-6.98	0.01
125	SLD 16	-8	-380	4460	26.11	-6.98	0.01
125	SLV 1	18	812	4526	-24.52	15.29	-0.01
125	SLV 2	18	812	4526	-24.52	15.29	-0.01
125	SLV 3	23	-124	4059	15.48	19.55	-0.01
125	SLV 4	23	-124	4059	15.48	19.55	-0.01
125	SLV 5	-2	1643	5202	-60.17	-2.17	0
125	SLV 6	-2	1643	5202	-60.17	-2.17	0
125	SLV 7	14	-1477	3645	73.15	12.04	-0.01
125	SLV 8	14	-1477	3645	73.15	12.04	-0.01
125	SLV 9	-15	1420	5314	-50.73	-12.88	0.01
125	SLV 10	-15	1420	5314	-50.73	-12.88	0.01
125	SLV 11	1	-1701	3758	82.59	1.33	0
125	SLV 12	1	-1701	3758	82.59	1.33	0
125	SLV 13	-24	67	4900	6.95	-20.39	0.02
125	SLV 14	-24	67	4900	6.95	-20.39	0.02
125	SLV 15	-19	-869	4433	46.94	-16.13	0.01
125	SLV 16	-19	-869	4433	46.94	-16.13	0.01
126	SLU 1	4	552	6422	-15.75	2.41	0
126	SLU 2	8	604	6463	-18.57	6.13	0
126	SLU 3	5	571	6593	-16.39	2.5	0
126	SLU 4	7	602	6618	-18.08	4.73	0
126	SLU 5	8	615	6562	-18.96	6.18	0
126	SLU 6	5	582	6692	-16.79	2.54	0
126	SLU 7	7	613	6717	-18.48	4.78	0
126	SLU 8	5	574	6620	-16.54	2.51	0
126	SLU 9	7	605	6645	-18.23	4.74	0
126	SLU 10	8	688	7269	-21.01	6.55	0
126	SLU 11	5	656	7399	-18.84	2.91	0
126	SLU 12	7	686	7424	-20.53	5.14	0
126	SLU 13	8	699	7368	-21.41	6.59	0
126	SLU 14	5	667	7498	-19.23	2.95	0
126	SLU 15	7	698	7523	-20.92	5.19	0
126	SLU 16	5	659	7426	-18.99	2.92	0
126	SLU 17	7	689	7451	-20.67	5.15	0
126	SLU 18	5	672	7574	-19.25	3	0
126	SLU 19	7	703	7598	-20.93	5.23	0
126	SLU 20	6	684	7673	-19.64	3.05	0
126	SLU 21	7	714	7697	-21.33	5.28	0
126	SLU 22	5	634	7190	-18.21	2.8	0
126	SLU 23	8	686	7231	-21.03	6.53	0
126	SLU 24	5	653	7361	-18.86	2.89	0
126	SLU 25	7	684	7386	-20.55	5.12	0
126	SLU 26	8	697	7330	-21.42	6.57	0
126	SLU 27	5	665	7460	-19.25	2.94	0
126	SLU 28	7	696	7485	-20.94	5.17	0
126	SLU 29	5	657	7388	-19	2.9	0
126	SLU 30	7	687	7413	-20.69	5.13	0
126	SLU 31	9	770	8037	-23.48	6.94	0
126	SLU 32	6	738	8167	-21.3	3.3	0
126	SLU 33	8	769	8192	-22.99	5.53	0
126	SLU 34	9	781	8136	-23.87	6.99	0
126	SLU 35	6	749	8266	-21.7	3.35	0
126	SLU 36	8	780	8291	-23.38	5.58	0
126	SLU 37	6	741	8194	-21.45	3.31	0
126	SLU 38	8	772	8219	-23.14	5.54	0
126	SLU 39	6	755	8342	-21.71	3.39	0
126	SLU 40	8	786	8366	-23.4	5.63	0
126	SLU 41	6	766	8441	-22.1	3.44	0
126	SLU 42	8	797	8465	-23.79	5.67	0
126	SLU 43	6	689	8085	-19.63	3	0
126	SLU 44	9	741	8126	-22.45	6.72	0
126	SLU 45	6	709	8256	-20.28	3.08	0
126	SLU 46	8	740	8281	-21.97	5.32	0
126	SLU 47	9	752	8225	-22.84	6.77	0
126	SLU 48	6	720	8355	-20.67	3.13	0
126	SLU 49	8	751	8380	-22.36	5.36	0
126	SLU 50	6	712	8283	-20.42	3.09	0
126	SLU 51	8	743	8308	-22.11	5.33	0

Nodo	Cont.	Reazione a traslazione			Reazione a rotazione		
Ind.	N.br.	x	y	z	x	y	z
126	SLU 52	9	825	8932	-24.9	7.13	0
126	SLU 53	6	793	9062	-22.72	3.5	0
126	SLU 54	8	824	9087	-24.41	5.73	0
126	SLU 55	10	836	9031	-25.29	7.18	0
126	SLU 56	7	804	9161	-23.12	3.54	0
126	SLU 57	8	835	9186	-24.8	5.78	0
126	SLU 58	6	796	9089	-22.87	3.51	0
126	SLU 59	8	827	9114	-24.56	5.74	0
126	SLU 60	7	810	9237	-23.13	3.59	0
126	SLU 61	8	841	9261	-24.82	5.82	0
126	SLU 62	7	821	9336	-23.52	3.64	0
126	SLU 63	9	852	9360	-25.21	5.87	0
126	SLU 64	6	772	8853	-22.1	3.39	0
126	SLU 65	9	823	8895	-24.91	7.12	0
126	SLU 66	6	791	9024	-22.74	3.48	0
126	SLU 67	8	822	9049	-24.43	5.71	0
126	SLU 68	10	834	8994	-25.31	7.16	0
126	SLU 69	6	802	9124	-23.13	3.52	0
126	SLU 70	8	833	9148	-24.82	5.76	0
126	SLU 71	6	794	9051	-22.88	3.49	0
126	SLU 72	8	825	9076	-24.57	5.72	0
126	SLU 73	10	907	9701	-27.36	7.53	0
126	SLU 74	7	875	9831	-25.18	3.89	0
126	SLU 75	9	906	9855	-26.87	6.12	0
126	SLU 76	10	919	9800	-27.75	7.57	0
126	SLU 77	7	886	9930	-25.58	3.94	0
126	SLU 78	9	917	9954	-27.27	6.17	0
126	SLU 79	7	878	9857	-25.33	3.9	0
126	SLU 80	9	909	9882	-27.02	6.13	0
126	SLU 81	7	892	10005	-25.59	3.98	0
126	SLU 82	9	923	10030	-27.28	6.21	0
126	SLU 83	7	903	10104	-25.98	4.03	0
126	SLU 84	9	934	10129	-27.67	6.26	0
126	SLE RA 1	5	576	6642	-16.46	2.52	0
126	SLE RA 2	7	610	6669	-18.33	5.01	0
126	SLE RA 3	5	588	6756	-16.88	2.58	0
126	SLE RA 4	6	609	6772	-18.01	4.07	0
126	SLE RA 5	7	617	6735	-18.6	5.04	0
126	SLE RA 6	5	596	6822	-17.15	2.61	0
126	SLE RA 7	6	616	6838	-18.27	4.1	0
126	SLE RA 8	5	590	6774	-16.98	2.59	0
126	SLE RA 9	6	611	6790	-18.11	4.08	0
126	SLE RA 10	7	666	7206	-19.96	5.28	0
126	SLE RA 11	5	645	7293	-18.51	2.85	0
126	SLE RA 12	7	665	7309	-19.64	4.34	0
126	SLE RA 13	7	673	7272	-20.23	5.31	0
126	SLE RA 14	5	652	7359	-18.78	2.89	0
126	SLE RA 15	7	673	7375	-19.9	4.37	0
126	SLE RA 16	5	647	7311	-18.61	2.86	0
126	SLE RA 17	7	667	7327	-19.74	4.35	0
126	SLE RA 18	5	656	7409	-18.78	2.92	0
126	SLE RA 19	7	676	7426	-19.91	4.4	0
126	SLE RA 20	5	663	7475	-19.05	2.95	0
126	SLE RA 21	7	684	7492	-20.17	4.44	0
126	SLE FR 1	5	576	6642	-16.46	2.52	0
126	SLE FR 2	5	582	6647	-16.83	3.02	0
126	SLE FR 3	5	578	6668	-16.56	2.54	0
126	SLE FR 4	5	606	6877	-17.53	3.14	0
126	SLE FR 5	5	603	6898	-17.26	2.65	0
126	SLE FR 6	5	616	7025	-17.62	2.72	0
126	SLE QP 1	5	576	6642	-16.46	2.52	0
126	SLE QP 2	5	600	6872	-17.15	2.64	0
126	SLD 1	29	661	5574	-22.1	23.21	0
126	SLD 2	29	661	5574	-22.1	23.21	0
126	SLD 3	23	300	5039	-4.74	18.09	0
126	SLD 4	23	300	5039	-4.74	18.09	0
126	SLD 5	21	1165	7294	-44.97	16.57	0
126	SLD 6	21	1165	7294	-44.97	16.57	0
126	SLD 7	2	-37	5511	12.91	-0.48	-0.01
126	SLD 8	2	-37	5511	12.91	-0.48	-0.01
126	SLD 9	8	1237	8233	-47.22	5.76	0
126	SLD 10	8	1237	8233	-47.22	5.76	0
126	SLD 11	-11	34	6450	10.67	-11.28	-0.01
126	SLD 12	-11	34	6450	10.67	-11.28	-0.01
126	SLD 13	-13	899	8704	-29.57	-12.81	0
126	SLD 14	-13	899	8704	-29.57	-12.81	0
126	SLD 15	-19	538	8169	-12.21	-17.92	-0.01
126	SLD 16	-19	538	8169	-12.21	-17.92	-0.01
126	SLV 1	62	741	3838	-28.58	51.92	0
126	SLV 2	62	741	3838	-28.58	51.92	0
126	SLV 3	48	-100	2578	11.9	39.33	0
126	SLV 4	48	-100	2578	11.9	39.33	0
126	SLV 5	43	1918	7874	-81.98	36.52	0.01
126	SLV 6	43	1918	7874	-81.98	36.52	0.01
126	SLV 7	-4	-886	3672	52.96	-5.44	-0.01
126	SLV 8	-4	-886	3672	52.96	-5.44	-0.01
126	SLV 9	13	2086	10072	-87.27	10.73	0.01
126	SLV 10	13	2086	10072	-87.27	10.73	0.01
126	SLV 11	-33	-719	5870	47.67	-31.24	-0.01
126	SLV 12	-33	-719	5870	47.67	-31.24	-0.01

Nodo	Cont.	Reazione a traslazione			Reazione a rotazione		
Ind.	N.br.	x	y	z	x	y	z
126	SLV 13	-38	1299	11166	-46.21	-34.05	0
126	SLV 14	-38	1299	11166	-46.21	-34.05	0
126	SLV 15	-52	458	9905	-5.73	-46.64	-0.01
126	SLV 16	-52	458	9905	-5.73	-46.64	-0.01
127	SLU 1	2	-22	542	1.25	1.28	0.01
127	SLU 2	2	-24	541	1.32	1.32	0.01
127	SLU 3	2	-23	544	1.3	1.31	0.01
127	SLU 4	2	-24	543	1.34	1.33	0.01
127	SLU 5	2	-24	543	1.35	1.34	0.01
127	SLU 6	2	-23	545	1.33	1.33	0.01
127	SLU 7	2	-24	545	1.37	1.35	0.01
127	SLU 8	2	-23	545	1.32	1.32	0.01
127	SLU 9	2	-24	544	1.36	1.34	0.01
127	SLU 10	2	-31	581	1.61	1.35	0.01
127	SLU 11	2	-31	583	1.59	1.34	0.01
127	SLU 12	2	-31	583	1.63	1.36	0.01
127	SLU 13	2	-32	582	1.64	1.36	0.01
127	SLU 14	2	-31	585	1.63	1.35	0.01
127	SLU 15	2	-32	584	1.66	1.38	0.01
127	SLU 16	2	-31	584	1.61	1.34	0.01
127	SLU 17	2	-32	584	1.65	1.36	0.01
127	SLU 18	2	-33	598	1.67	1.32	0.01
127	SLU 19	2	-34	598	1.71	1.34	0.01
127	SLU 20	2	-34	599	1.7	1.34	0.01
127	SLU 21	2	-34	599	1.74	1.36	0.01
127	SLU 22	2	-26	559	1.47	1.41	0.01
127	SLU 23	2	-28	558	1.53	1.45	0.01
127	SLU 24	2	-27	561	1.52	1.44	0.01
127	SLU 25	2	-28	561	1.56	1.46	0.01
127	SLU 26	2	-28	560	1.57	1.47	0.01
127	SLU 27	2	-28	563	1.55	1.46	0.01
127	SLU 28	2	-28	562	1.59	1.48	0.01
127	SLU 29	2	-27	562	1.54	1.45	0.01
127	SLU 30	2	-28	562	1.57	1.47	0.01
127	SLU 31	2	-35	598	1.82	1.48	0.01
127	SLU 32	2	-35	601	1.81	1.47	0.01
127	SLU 33	2	-36	600	1.85	1.49	0.01
127	SLU 34	2	-36	599	1.86	1.49	0.01
127	SLU 35	2	-35	602	1.84	1.48	0.01
127	SLU 36	2	-36	602	1.88	1.51	0.01
127	SLU 37	2	-35	601	1.83	1.47	0.01
127	SLU 38	2	-36	601	1.86	1.49	0.01
127	SLU 39	2	-37	615	1.89	1.45	0.01
127	SLU 40	2	-38	615	1.92	1.47	0.01
127	SLU 41	2	-38	617	1.92	1.47	0.01
127	SLU 42	2	-39	616	1.96	1.49	0.01
127	SLU 43	2	-27	698	1.56	1.62	0.01
127	SLU 44	2	-29	698	1.62	1.66	0.01
127	SLU 45	2	-28	700	1.6	1.65	0.01
127	SLU 46	2	-29	700	1.64	1.68	0.01
127	SLU 47	2	-29	699	1.65	1.68	0.01
127	SLU 48	2	-29	702	1.64	1.67	0.01
127	SLU 49	2	-29	702	1.67	1.69	0.01
127	SLU 50	2	-28	701	1.62	1.66	0.01
127	SLU 51	2	-29	701	1.66	1.68	0.01
127	SLU 52	2	-36	737	1.91	1.69	0.01
127	SLU 53	2	-36	740	1.89	1.68	0.01
127	SLU 54	2	-37	739	1.93	1.7	0.01
127	SLU 55	2	-37	739	1.94	1.7	0.01
127	SLU 56	2	-36	741	1.93	1.69	0.01
127	SLU 57	2	-37	741	1.96	1.72	0.01
127	SLU 58	2	-36	741	1.91	1.68	0.01
127	SLU 59	2	-37	740	1.95	1.7	0.01
127	SLU 60	2	-38	755	1.97	1.66	0.01
127	SLU 61	2	-39	754	2.01	1.68	0.01
127	SLU 62	2	-39	756	2	1.68	0.01
127	SLU 63	2	-40	756	2.04	1.7	0.01
127	SLU 64	2	-31	716	1.77	1.75	0.01
127	SLU 65	2	-33	715	1.83	1.79	0.01
127	SLU 66	2	-32	718	1.82	1.78	0.01
127	SLU 67	2	-33	717	1.86	1.8	0.01
127	SLU 68	2	-33	716	1.87	1.81	0.01
127	SLU 69	2	-33	719	1.85	1.8	0.01
127	SLU 70	2	-34	719	1.89	1.82	0.01
127	SLU 71	2	-33	718	1.84	1.79	0.01
127	SLU 72	2	-33	718	1.88	1.81	0.01
127	SLU 73	3	-41	754	2.12	1.82	0.01
127	SLU 74	3	-40	757	2.11	1.81	0.01
127	SLU 75	3	-41	757	2.15	1.83	0.01
127	SLU 76	3	-41	756	2.16	1.83	0.01
127	SLU 77	3	-40	759	2.14	1.82	0.01
127	SLU 78	3	-41	758	2.18	1.85	0.01
127	SLU 79	3	-40	758	2.13	1.81	0.01
127	SLU 80	3	-41	758	2.17	1.83	0.01
127	SLU 81	3	-42	772	2.19	1.79	0.01
127	SLU 82	3	-43	772	2.22	1.81	0.01
127	SLU 83	3	-43	773	2.22	1.81	0.01
127	SLU 84	3	-44	773	2.26	1.83	0.01
127	SLE RA 1	2	-23	547	1.32	1.32	0.01
127	SLE RA 2	2	-24	546	1.36	1.35	0.01

Nodo	Cont.	Reazione a traslazione			Reazione a rotazione		
Ind.	N.br.	x	y	z	x	y	z
127	SLE RA 3	2	-24	548	1.35	1.34	0.01
127	SLE RA 4	2	-24	548	1.37	1.35	0.01
127	SLE RA 5	2	-25	547	1.38	1.36	0.01
127	SLE RA 6	2	-24	549	1.37	1.35	0.01
127	SLE RA 7	2	-25	549	1.39	1.37	0.01
127	SLE RA 8	2	-24	549	1.36	1.34	0.01
127	SLE RA 9	2	-25	548	1.38	1.36	0.01
127	SLE RA 10	2	-29	573	1.55	1.36	0.01
127	SLE RA 11	2	-29	574	1.54	1.36	0.01
127	SLE RA 12	2	-29	574	1.57	1.37	0.01
127	SLE RA 13	2	-30	574	1.57	1.37	0.01
127	SLE RA 14	2	-29	575	1.56	1.37	0.01
127	SLE RA 15	2	-30	575	1.59	1.38	0.01
127	SLE RA 16	2	-29	575	1.55	1.36	0.01
127	SLE RA 17	2	-30	575	1.58	1.37	0.01
127	SLE RA 18	2	-31	584	1.59	1.35	0.01
127	SLE RA 19	2	-31	584	1.62	1.36	0.01
127	SLE RA 20	2	-31	585	1.61	1.36	0.01
127	SLE RA 21	2	-32	585	1.64	1.37	0.01
127	SLE FR 1	2	-23	547	1.32	1.32	0.01
127	SLE FR 2	2	-23	547	1.32	1.33	0.01
127	SLE FR 3	2	-23	547	1.32	1.33	0.01
127	SLE FR 4	2	-26	558	1.41	1.33	0.01
127	SLE FR 5	2	-26	558	1.41	1.33	0.01
127	SLE FR 6	2	-27	565	1.45	1.33	0.01
127	SLE QP 1	2	-23	547	1.32	1.32	0.01
127	SLE QP 2	2	-25	558	1.4	1.33	0.01
127	SLD 1	12	12	576	-0.24	9.95	0.08
127	SLD 2	12	12	576	-0.24	9.95	0.08
127	SLD 3	13	-86	560	4.04	10.87	0.09
127	SLD 4	13	-86	560	4.04	10.87	0.09
127	SLD 5	3	134	588	-5.59	2.52	0.01
127	SLD 6	3	134	588	-5.59	2.52	0.01
127	SLD 7	7	-192	534	8.69	5.59	0.05
127	SLD 8	7	-192	534	8.69	5.59	0.05
127	SLD 9	-3	141	582	-5.89	-2.93	-0.03
127	SLD 10	-3	141	582	-5.89	-2.93	-0.03
127	SLD 11	0	-185	528	8.39	0.14	0.01
127	SLD 12	0	-185	528	8.39	0.14	0.01
127	SLD 13	-10	35	556	-1.24	-8.21	-0.07
127	SLD 14	-10	35	556	-1.24	-8.21	-0.07
127	SLD 15	-8	-63	540	3.04	-7.29	-0.05
127	SLD 16	-8	-63	540	3.04	-7.29	-0.05
127	SLV 1	26	62	601	-2.45	21.52	0.16
127	SLV 2	26	62	601	-2.45	21.52	0.16
127	SLV 3	29	-167	563	7.59	23.68	0.19
127	SLV 4	29	-167	563	7.59	23.68	0.19
127	SLV 5	5	349	629	-14.97	4.11	0.01
127	SLV 6	5	349	629	-14.97	4.11	0.01
127	SLV 7	14	-416	502	18.48	11.31	0.11
127	SLV 8	14	-416	502	18.48	11.31	0.11
127	SLV 9	-10	365	614	-15.68	-8.65	-0.09
127	SLV 10	-10	365	614	-15.68	-8.65	-0.09
127	SLV 11	-1	-400	487	17.77	-1.45	0.01
127	SLV 12	-1	-400	487	17.77	-1.45	0.01
127	SLV 13	-25	116	553	-4.79	-21.02	-0.17
127	SLV 14	-25	116	553	-4.79	-21.02	-0.17
127	SLV 15	-22	-113	514	5.24	-18.86	-0.14
127	SLV 16	-22	-113	514	5.24	-18.86	-0.14
128	SLU 1	23	-263	5248	10.55	16.33	0.09
128	SLU 2	24	-364	5330	14.64	16.7	0.09
128	SLU 3	24	-268	5391	10.79	16.78	0.09
128	SLU 4	24	-328	5440	13.24	17.01	0.09
128	SLU 5	24	-368	5423	14.82	17	0.09
128	SLU 6	24	-272	5484	10.97	17.08	0.1
128	SLU 7	25	-332	5533	13.42	17.31	0.1
128	SLU 8	24	-271	5434	10.91	16.92	0.1
128	SLU 9	24	-331	5483	13.36	17.15	0.1
128	SLU 10	31	-402	6114	16.25	21.66	0.1
128	SLU 11	31	-306	6175	12.4	21.74	0.1
128	SLU 12	31	-367	6224	14.85	21.96	0.1
128	SLU 13	31	-406	6207	16.43	21.96	0.1
128	SLU 14	31	-310	6268	12.58	22.04	0.1
128	SLU 15	31	-370	6317	15.03	22.26	0.1
128	SLU 16	31	-309	6218	12.52	21.88	0.1
128	SLU 17	31	-369	6267	14.97	22.1	0.1
128	SLU 18	33	-317	6367	12.85	23.41	0.1
128	SLU 19	33	-378	6417	15.3	23.63	0.1
128	SLU 20	33	-321	6460	13.03	23.7	0.1
128	SLU 21	34	-382	6510	15.48	23.93	0.1
128	SLU 22	27	-289	5909	11.7	18.97	0.1
128	SLU 23	28	-389	5992	15.78	19.35	0.1
128	SLU 24	28	-293	6053	11.93	19.43	0.11
128	SLU 25	28	-354	6102	14.38	19.65	0.11
128	SLU 26	28	-393	6085	15.96	19.65	0.1
128	SLU 27	28	-297	6146	12.11	19.73	0.11
128	SLU 28	29	-358	6195	14.56	19.95	0.11
128	SLU 29	28	-296	6096	12.06	19.57	0.11
128	SLU 30	28	-357	6145	14.51	19.79	0.11
128	SLU 31	34	-427	6775	17.39	24.31	0.11

Nodo	Cont.	Reazione a traslazione			Reazione a rotazione		
Ind.	N.br.	x	y	z	x	y	z
128	SLU 32	35	-331	6836	13.54	24.38	0.11
128	SLU 33	35	-392	6886	15.99	24.61	0.11
128	SLU 34	35	-431	6868	17.57	24.6	0.11
128	SLU 35	35	-335	6929	13.72	24.68	0.12
128	SLU 36	35	-396	6979	16.17	24.91	0.12
128	SLU 37	35	-334	6879	13.67	24.52	0.11
128	SLU 38	35	-395	6929	16.12	24.75	0.11
128	SLU 39	37	-343	7029	14	26.05	0.11
128	SLU 40	37	-403	7078	16.45	26.28	0.11
128	SLU 41	37	-347	7122	14.18	26.35	0.11
128	SLU 42	37	-407	7171	16.63	26.58	0.11
128	SLU 43	29	-333	6595	13.33	20.32	0.11
128	SLU 44	30	-434	6678	17.41	20.7	0.11
128	SLU 45	30	-338	6739	13.56	20.77	0.12
128	SLU 46	30	-399	6788	16.01	21	0.12
128	SLU 47	30	-438	6771	17.59	20.99	0.12
128	SLU 48	30	-342	6832	13.74	21.07	0.12
128	SLU 49	30	-402	6881	16.19	21.3	0.12
128	SLU 50	30	-341	6781	13.69	20.91	0.12
128	SLU 51	30	-401	6831	16.14	21.14	0.12
128	SLU 52	36	-472	7461	19.02	25.65	0.12
128	SLU 53	36	-376	7522	15.17	25.73	0.13
128	SLU 54	37	-437	7572	17.62	25.96	0.13
128	SLU 55	37	-476	7554	19.2	25.95	0.12
128	SLU 56	37	-380	7615	15.35	26.03	0.13
128	SLU 57	37	-441	7665	17.8	26.25	0.13
128	SLU 58	37	-379	7565	15.3	25.87	0.13
128	SLU 59	37	-440	7614	17.75	26.09	0.13
128	SLU 60	39	-388	7715	15.63	27.4	0.13
128	SLU 61	39	-448	7764	18.08	27.62	0.13
128	SLU 62	39	-392	7808	15.81	27.7	0.13
128	SLU 63	39	-452	7857	18.26	27.92	0.13
128	SLU 64	33	-359	7257	14.47	22.96	0.13
128	SLU 65	33	-460	7339	18.56	23.34	0.13
128	SLU 66	33	-364	7400	14.71	23.42	0.13
128	SLU 67	34	-424	7450	17.16	23.65	0.13
128	SLU 68	34	-463	7432	18.73	23.64	0.13
128	SLU 69	34	-367	7493	14.89	23.72	0.13
128	SLU 70	34	-428	7543	17.34	23.94	0.13
128	SLU 71	34	-366	7443	14.83	23.56	0.13
128	SLU 72	34	-427	7492	17.28	23.78	0.13
128	SLU 73	40	-498	8123	20.16	28.3	0.13
128	SLU 74	40	-402	8184	16.32	28.38	0.14
128	SLU 75	40	-462	8233	18.77	28.6	0.14
128	SLU 76	40	-501	8216	20.34	28.59	0.14
128	SLU 77	41	-406	8277	16.49	28.67	0.14
128	SLU 78	41	-466	8326	18.94	28.9	0.14
128	SLU 79	40	-405	8227	16.44	28.51	0.14
128	SLU 80	41	-465	8276	18.89	28.74	0.14
128	SLU 81	42	-413	8377	16.77	30.04	0.14
128	SLU 82	43	-474	8426	19.22	30.27	0.14
128	SLU 83	43	-417	8470	16.95	30.34	0.14
128	SLU 84	43	-477	8519	19.4	30.57	0.14
128	SLE RA 1	24	-270	5437	10.88	17.08	0.09
128	SLE RA 2	25	-338	5492	13.6	17.34	0.09
128	SLE RA 3	25	-274	5532	11.04	17.39	0.1
128	SLE RA 4	25	-314	5565	12.67	17.54	0.1
128	SLE RA 5	25	-340	5554	13.72	17.53	0.1
128	SLE RA 6	25	-276	5594	11.16	17.58	0.1
128	SLE RA 7	25	-316	5627	12.79	17.74	0.1
128	SLE RA 8	25	-275	5561	11.12	17.48	0.1
128	SLE RA 9	25	-316	5594	12.75	17.63	0.1
128	SLE RA 10	29	-363	6014	14.68	20.64	0.1
128	SLE RA 11	29	-299	6055	12.11	20.69	0.1
128	SLE RA 12	30	-339	6088	13.74	20.84	0.1
128	SLE RA 13	29	-366	6076	14.79	20.84	0.1
128	SLE RA 14	30	-302	6117	12.23	20.89	0.1
128	SLE RA 15	30	-342	6150	13.86	21.04	0.1
128	SLE RA 16	29	-301	6083	12.19	20.78	0.1
128	SLE RA 17	30	-341	6116	13.83	20.93	0.1
128	SLE RA 18	31	-307	6183	12.41	21.8	0.1
128	SLE RA 19	31	-347	6216	14.05	21.95	0.1
128	SLE RA 20	31	-309	6245	12.53	22	0.1
128	SLE RA 21	31	-350	6278	14.17	22.15	0.1
128	SLE FR 1	24	-270	5437	10.88	17.08	0.09
128	SLE FR 2	24	-284	5448	11.43	17.13	0.09
128	SLE FR 3	25	-271	5462	10.93	17.16	0.09
128	SLE FR 4	26	-295	5672	11.89	18.55	0.1
128	SLE FR 5	26	-282	5686	11.39	18.58	0.1
128	SLE FR 6	28	-289	5810	11.65	19.44	0.1
128	SLE QP 1	24	-270	5437	10.88	17.08	0.09
128	SLE QP 2	26	-281	5661	11.34	18.5	0.1
128	SLD 1	47	-214	5244	8.56	38.07	0.14
128	SLD 2	47	-214	5244	8.56	38.07	0.14
128	SLD 3	51	-629	5466	25.21	40.94	0.11
128	SLD 4	51	-629	5466	25.21	40.94	0.11
128	SLD 5	28	368	5198	-14.75	20.01	0.15
128	SLD 6	28	368	5198	-14.75	20.01	0.15
128	SLD 7	39	-1015	5940	40.76	29.59	0.06
128	SLD 8	39	-1015	5940	40.76	29.59	0.06

Nodo	Cont.	Reazione a traslazione			Reazione a rotazione		
Ind.	N.br.	x	y	z	x	y	z
128	SLD 9	14	453	5382	-18.08	7.4	0.14
128	SLD 10	14	453	5382	-18.08	7.4	0.14
128	SLD 11	25	-931	6123	37.43	16.99	0.04
128	SLD 12	25	-931	6123	37.43	16.99	0.04
128	SLD 13	2	67	5855	-2.53	-3.94	0.08
128	SLD 14	2	67	5855	-2.53	-3.94	0.08
128	SLD 15	5	-348	6078	14.12	-1.07	0.05
128	SLD 16	5	-348	6078	14.12	-1.07	0.05
128	SLV 1	75	-125	4680	4.82	64.24	0.19
128	SLV 2	75	-125	4680	4.82	64.24	0.19
128	SLV 3	84	-1100	5209	43.96	71.19	0.13
128	SLV 4	84	-1100	5209	43.96	71.19	0.13
128	SLV 5	29	1245	4564	-49.98	21.67	0.23
128	SLV 6	29	1245	4564	-49.98	21.67	0.23
128	SLV 7	56	-2006	6328	80.49	44.86	0
128	SLV 8	56	-2006	6328	80.49	44.86	0
128	SLV 9	-3	1443	4994	-57.8	-7.86	0.19
128	SLV 10	-3	1443	4994	-57.8	-7.86	0.19
128	SLV 11	24	-1807	6758	72.66	15.32	-0.03
128	SLV 12	24	-1807	6758	72.66	15.32	-0.03
128	SLV 13	-31	537	6113	-21.28	-34.2	0.07
128	SLV 14	-31	537	6113	-21.28	-34.2	0.07
128	SLV 15	-23	-438	6642	17.86	-27.24	0
128	SLV 16	-23	-438	6642	17.86	-27.24	0
129	SLU 1	38	736	6539	-28.92	28.91	-0.13
129	SLU 2	35	788	6530	-30.65	25.56	-0.12
129	SLU 3	39	768	6713	-29.98	29.71	-0.13
129	SLU 4	38	799	6708	-31.02	27.7	-0.12
129	SLU 5	36	812	6633	-31.36	25.99	-0.12
129	SLU 6	40	791	6816	-30.68	30.14	-0.13
129	SLU 7	38	823	6811	-31.73	28.13	-0.13
129	SLU 8	39	783	6745	-30.32	29.77	-0.13
129	SLU 9	38	814	6739	-31.36	27.76	-0.12
129	SLU 10	40	897	7321	-34.83	29.38	-0.13
129	SLU 11	44	876	7504	-34.15	33.53	-0.15
129	SLU 12	43	908	7499	-35.2	31.52	-0.14
129	SLU 13	41	921	7424	-35.53	29.81	-0.14
129	SLU 14	45	900	7607	-34.85	33.96	-0.15
129	SLU 15	43	931	7601	-35.9	31.95	-0.14
129	SLU 16	44	891	7535	-34.49	33.59	-0.15
129	SLU 17	43	923	7530	-35.53	31.58	-0.14
129	SLU 18	45	891	7669	-34.88	34.37	-0.15
129	SLU 19	44	923	7664	-35.92	32.36	-0.14
129	SLU 20	46	914	7772	-35.58	34.8	-0.15
129	SLU 21	44	946	7766	-36.62	32.79	-0.15
129	SLU 22	43	844	7305	-33.01	32.61	-0.14
129	SLU 23	40	897	7295	-34.75	29.26	-0.13
129	SLU 24	44	876	7479	-34.08	33.4	-0.15
129	SLU 25	42	908	7473	-35.12	31.39	-0.14
129	SLU 26	41	920	7398	-35.45	29.69	-0.14
129	SLU 27	45	899	7581	-34.78	33.83	-0.15
129	SLU 28	43	931	7576	-35.82	31.82	-0.14
129	SLU 29	44	891	7510	-34.42	33.46	-0.15
129	SLU 30	42	923	7504	-35.46	31.45	-0.14
129	SLU 31	45	1005	8086	-38.92	33.08	-0.15
129	SLU 32	49	985	8269	-38.25	37.22	-0.16
129	SLU 33	47	1016	8264	-39.29	35.21	-0.16
129	SLU 34	46	1029	8189	-39.62	33.5	-0.15
129	SLU 35	50	1008	8372	-38.95	37.65	-0.16
129	SLU 36	48	1040	8367	-39.99	35.64	-0.16
129	SLU 37	49	1000	8301	-38.59	37.28	-0.16
129	SLU 38	48	1031	8295	-39.63	35.27	-0.16
129	SLU 39	50	999	8434	-38.97	38.06	-0.17
129	SLU 40	48	1031	8429	-40.01	36.05	-0.16
129	SLU 41	51	1023	8537	-39.67	38.49	-0.17
129	SLU 42	49	1054	8531	-40.71	36.48	-0.16
129	SLU 43	48	919	8239	-36.19	36.32	-0.16
129	SLU 44	45	972	8230	-37.93	32.97	-0.15
129	SLU 45	49	951	8413	-37.25	37.12	-0.16
129	SLU 46	47	983	8407	-38.3	35.11	-0.16
129	SLU 47	46	995	8332	-38.63	33.4	-0.15
129	SLU 48	50	975	8516	-37.96	37.55	-0.16
129	SLU 49	48	1006	8510	-39	35.54	-0.16
129	SLU 50	49	966	8444	-37.59	37.18	-0.16
129	SLU 51	47	998	8439	-38.64	35.17	-0.16
129	SLU 52	50	1080	9020	-42.1	36.79	-0.17
129	SLU 53	54	1060	9204	-41.42	40.94	-0.18
129	SLU 54	52	1091	9198	-42.47	38.93	-0.17
129	SLU 55	51	1104	9123	-42.8	37.22	-0.17
129	SLU 56	55	1083	9306	-42.13	41.36	-0.18
129	SLU 57	53	1115	9301	-43.17	39.36	-0.18
129	SLU 58	54	1075	9235	-41.76	41	-0.18
129	SLU 59	52	1106	9229	-42.81	38.99	-0.17
129	SLU 60	55	1074	9368	-42.15	41.78	-0.18
129	SLU 61	53	1106	9363	-43.19	39.77	-0.18
129	SLU 62	56	1098	9471	-42.85	42.2	-0.18
129	SLU 63	54	1130	9466	-43.89	40.19	-0.18
129	SLU 64	53	1027	9004	-40.28	40.01	-0.17
129	SLU 65	50	1080	8995	-42.02	36.67	-0.17
129	SLU 66	54	1059	9178	-41.35	40.81	-0.18

Nodo	Cont.	Reazione a traslazione			Reazione a rotazione		
Ind.	N.br.	x	y	z	x	y	z
129	SLU 67	52	1091	9173	-42.39	38.8	-0.17
129	SLU 68	51	1104	9098	-42.72	37.09	-0.17
129	SLU 69	54	1083	9281	-42.05	41.24	-0.18
129	SLU 70	53	1115	9275	-43.09	39.23	-0.17
129	SLU 71	54	1075	9209	-41.69	40.87	-0.18
129	SLU 72	52	1106	9204	-42.73	38.86	-0.17
129	SLU 73	55	1189	9786	-46.19	40.48	-0.18
129	SLU 74	59	1168	9969	-45.52	44.63	-0.19
129	SLU 75	57	1200	9963	-46.56	42.62	-0.19
129	SLU 76	56	1212	9888	-46.89	40.91	-0.18
129	SLU 77	59	1192	10072	-46.22	45.06	-0.2
129	SLU 78	58	1223	10066	-47.26	43.05	-0.19
129	SLU 79	59	1183	10000	-45.86	44.69	-0.2
129	SLU 80	57	1215	9995	-46.9	42.68	-0.19
129	SLU 81	60	1183	10134	-46.24	45.47	-0.2
129	SLU 82	58	1214	10128	-47.28	43.46	-0.19
129	SLU 83	61	1206	10236	-46.94	45.9	-0.2
129	SLU 84	59	1238	10231	-47.99	43.89	-0.19
129	SLE RA 1	40	767	6758	-30.09	29.97	-0.13
129	SLE RA 2	38	802	6752	-31.25	27.74	-0.12
129	SLE RA 3	40	788	6874	-30.8	30.5	-0.13
129	SLE RA 4	39	809	6870	-31.49	29.16	-0.13
129	SLE RA 5	38	817	6820	-31.71	28.02	-0.13
129	SLE RA 6	41	804	6943	-31.26	30.79	-0.13
129	SLE RA 7	40	825	6939	-31.96	29.45	-0.13
129	SLE RA 8	40	798	6895	-31.02	30.54	-0.13
129	SLE RA 9	39	819	6891	-31.72	29.2	-0.13
129	SLE RA 10	41	874	7279	-34.03	30.28	-0.14
129	SLE RA 11	44	860	7401	-33.58	33.05	-0.14
129	SLE RA 12	42	881	7398	-34.27	31.71	-0.14
129	SLE RA 13	41	890	7348	-34.49	30.57	-0.14
129	SLE RA 14	44	876	7470	-34.05	33.33	-0.15
129	SLE RA 15	43	897	7466	-34.74	31.99	-0.14
129	SLE RA 16	44	870	7422	-33.8	33.08	-0.14
129	SLE RA 17	43	891	7418	-34.5	31.75	-0.14
129	SLE RA 18	44	870	7511	-34.06	33.6	-0.15
129	SLE RA 19	43	891	7507	-34.75	32.27	-0.14
129	SLE RA 20	45	886	7580	-34.53	33.89	-0.15
129	SLE RA 21	44	907	7576	-35.22	32.55	-0.14
129	SLE FR 1	40	767	6758	-30.09	29.97	-0.13
129	SLE FR 2	39	774	6757	-30.32	29.52	-0.13
129	SLE FR 3	40	773	6785	-30.27	30.08	-0.13
129	SLE FR 4	41	805	6983	-31.51	30.61	-0.13
129	SLE FR 5	41	804	7011	-31.47	31.17	-0.14
129	SLE FR 6	42	818	7135	-32.07	31.79	-0.14
129	SLE QP 1	40	767	6758	-30.09	29.97	-0.13
129	SLE QP 2	41	798	6984	-31.28	31.06	-0.14
129	SLD 1	87	1154	8609	-43.68	66.99	-0.29
129	SLD 2	87	1154	8609	-43.68	66.99	-0.29
129	SLD 3	79	795	8215	-32.05	60.55	-0.26
129	SLD 4	79	795	8215	-32.05	60.55	-0.26
129	SLD 5	67	1449	8069	-52.62	51.62	-0.22
129	SLD 6	67	1449	8069	-52.62	51.62	-0.22
129	SLD 7	40	253	6755	-13.88	30.13	-0.13
129	SLD 8	40	253	6755	-13.88	30.13	-0.13
129	SLD 9	42	1342	7213	-48.67	31.99	-0.14
129	SLD 10	42	1342	7213	-48.67	31.99	-0.14
129	SLD 11	14	147	5899	-9.93	10.5	-0.05
129	SLD 12	14	147	5899	-9.93	10.5	-0.05
129	SLD 13	3	800	5753	-30.5	1.57	-0.01
129	SLD 14	3	800	5753	-30.5	1.57	-0.01
129	SLD 15	-5	441	5359	-18.88	-4.88	0.02
129	SLD 16	-5	441	5359	-18.88	-4.88	0.02
129	SLV 1	149	1632	10791	-60.31	115.22	-0.49
129	SLV 2	149	1632	10791	-60.31	115.22	-0.49
129	SLV 3	130	795	9861	-33.18	99.99	-0.42
129	SLV 4	130	795	9861	-33.18	99.99	-0.42
129	SLV 5	103	2317	9537	-81.14	79.41	-0.34
129	SLV 6	103	2317	9537	-81.14	79.41	-0.34
129	SLV 7	38	-472	6437	9.3	28.63	-0.12
129	SLV 8	38	-472	6437	9.3	28.63	-0.12
129	SLV 9	44	2067	7531	-71.86	33.48	-0.15
129	SLV 10	44	2067	7531	-71.86	33.48	-0.15
129	SLV 11	-21	-721	4431	18.58	-17.29	0.07
129	SLV 12	-21	-721	4431	18.58	-17.29	0.07
129	SLV 13	-48	800	4106	-29.38	-37.87	0.15
129	SLV 14	-48	800	4106	-29.38	-37.87	0.15
129	SLV 15	-67	-37	3177	-2.25	-53.11	0.22
129	SLV 16	-67	-37	3177	-2.25	-53.11	0.22
130	SLU 1	15	-68	3074	9.36	10.63	0
130	SLU 2	15	166	3019	0.59	10.91	0
130	SLU 3	15	-68	3157	9.84	10.96	0
130	SLU 4	16	73	3123	4.57	11.13	0
130	SLU 5	15	168	3070	0.91	11.11	0
130	SLU 6	16	-67	3208	10.16	11.16	0
130	SLU 7	16	74	3175	4.9	11.33	0
130	SLU 8	16	-65	3177	10.01	11.03	0
130	SLU 9	16	75	3144	4.74	11.2	0
130	SLU 10	17	162	3451	2.12	12.59	0
130	SLU 11	18	-72	3589	11.37	12.65	0

Nodo	Cont.	Reazione a traslazione			Reazione a rotazione		
Ind.	N.br.	x	y	z	x	y	z
130	SLU 12	18	69	3555	6.11	12.82	0
130	SLU 13	18	164	3502	2.45	12.8	0
130	SLU 14	18	-71	3640	11.7	12.85	0
130	SLU 15	18	70	3607	6.43	13.02	0
130	SLU 16	18	-69	3609	11.54	12.72	0
130	SLU 17	18	71	3576	6.28	12.88	0
130	SLU 18	18	-74	3691	11.55	13.04	0
130	SLU 19	18	67	3658	6.29	13.21	0
130	SLU 20	19	-72	3743	11.88	13.24	0
130	SLU 21	19	68	3709	6.61	13.41	0
130	SLU 22	17	-72	3478	10.95	12.23	0
130	SLU 23	17	162	3423	2.18	12.51	0
130	SLU 24	18	-72	3561	11.43	12.56	0
130	SLU 25	18	69	3527	6.17	12.73	0
130	SLU 26	18	164	3474	2.5	12.71	0
130	SLU 27	18	-70	3612	11.75	12.77	0
130	SLU 28	18	70	3579	6.49	12.93	0
130	SLU 29	18	-69	3581	11.6	12.63	0
130	SLU 30	18	72	3548	6.33	12.8	0
130	SLU 31	20	158	3855	3.72	14.2	0.01
130	SLU 32	20	-76	3993	12.97	14.25	0.01
130	SLU 33	20	65	3959	7.7	14.42	0.01
130	SLU 34	20	160	3906	4.04	14.4	0.01
130	SLU 35	20	-74	4044	13.29	14.45	0.01
130	SLU 36	20	66	4011	8.03	14.62	0.01
130	SLU 37	20	-73	4013	13.13	14.32	0.01
130	SLU 38	20	68	3980	7.87	14.49	0.01
130	SLU 39	21	-78	4095	13.15	14.64	0.01
130	SLU 40	21	63	4062	7.88	14.81	0.01
130	SLU 41	21	-76	4147	13.47	14.84	0.01
130	SLU 42	21	64	4113	8.21	15.01	0.01
130	SLU 43	19	-87	3858	11.62	13.27	0
130	SLU 44	19	147	3802	2.85	13.54	0.01
130	SLU 45	19	-87	3940	12.1	13.6	0.01
130	SLU 46	19	53	3907	6.84	13.77	0.01
130	SLU 47	19	149	3854	3.17	13.75	0.01
130	SLU 48	19	-86	3992	12.42	13.8	0.01
130	SLU 49	20	55	3959	7.16	13.97	0.01
130	SLU 50	19	-84	3961	12.27	13.67	0.01
130	SLU 51	19	56	3927	7	13.83	0.01
130	SLU 52	21	143	4234	4.39	15.23	0.01
130	SLU 53	22	-91	4372	13.64	15.29	0.01
130	SLU 54	22	49	4339	8.37	15.46	0.01
130	SLU 55	21	144	4286	4.71	15.43	0.01
130	SLU 56	22	-90	4424	13.96	15.49	0.01
130	SLU 57	22	51	4391	8.69	15.66	0.01
130	SLU 58	22	-88	4393	13.8	15.36	0.01
130	SLU 59	22	52	4359	8.54	15.52	0.01
130	SLU 60	22	-93	4475	13.82	15.68	0.01
130	SLU 61	22	47	4442	8.55	15.84	0.01
130	SLU 62	22	-92	4526	14.14	15.88	0.01
130	SLU 63	22	49	4493	8.88	16.05	0.01
130	SLU 64	21	-91	4262	13.21	14.87	0.01
130	SLU 65	21	143	4206	4.44	15.15	0.01
130	SLU 66	21	-91	4344	13.69	15.2	0.01
130	SLU 67	22	49	4311	8.43	15.37	0.01
130	SLU 68	21	145	4258	4.77	15.35	0.01
130	SLU 69	22	-90	4396	14.01	15.4	0.01
130	SLU 70	22	51	4363	8.75	15.57	0.01
130	SLU 71	22	-88	4365	13.86	15.27	0.01
130	SLU 72	22	52	4332	8.6	15.44	0.01
130	SLU 73	23	139	4638	5.98	16.84	0.01
130	SLU 74	24	-95	4776	15.23	16.89	0.01
130	SLU 75	24	45	4743	9.96	17.06	0.01
130	SLU 76	24	141	4690	6.3	17.04	0.01
130	SLU 77	24	-94	4828	15.55	17.09	0.01
130	SLU 78	24	47	4795	10.29	17.26	0.01
130	SLU 79	24	-92	4797	15.4	16.96	0.01
130	SLU 80	24	48	4763	10.13	17.13	0.01
130	SLU 81	24	-97	4879	15.41	17.28	0.01
130	SLU 82	24	44	4846	10.15	17.45	0.01
130	SLU 83	25	-96	4930	15.73	17.48	0.01
130	SLU 84	25	45	4897	10.47	17.65	0.01
130	SLE RA 1	16	-69	3189	9.82	11.08	0
130	SLE RA 2	16	87	3153	3.97	11.27	0
130	SLE RA 3	16	-69	3244	10.13	11.31	0
130	SLE RA 4	16	24	3222	6.62	11.42	0
130	SLE RA 5	16	88	3187	4.18	11.4	0
130	SLE RA 6	16	-68	3279	10.35	11.44	0
130	SLE RA 7	16	26	3257	6.84	11.55	0
130	SLE RA 8	16	-67	3258	10.25	11.35	0
130	SLE RA 9	16	26	3236	6.74	11.46	0
130	SLE RA 10	17	84	3441	4.99	12.4	0
130	SLE RA 11	18	-72	3532	11.16	12.43	0
130	SLE RA 12	18	22	3510	7.65	12.55	0
130	SLE RA 13	17	85	3475	5.21	12.53	0
130	SLE RA 14	18	-71	3567	11.37	12.57	0
130	SLE RA 15	18	23	3545	7.86	12.68	0
130	SLE RA 16	18	-70	3546	11.27	12.48	0
130	SLE RA 17	18	24	3524	7.76	12.59	0

Nodo	Cont.	Reazione a traslazione			Reazione a rotazione		
Ind.	N.br.	x	y	z	x	y	z
130	SLE RA 18	18	-73	3601	11.28	12.69	0
130	SLE RA 19	18	21	3579	7.77	12.8	0
130	SLE RA 20	18	-72	3635	11.49	12.83	0
130	SLE RA 21	18	22	3613	7.98	12.94	0
130	SLE FR 1	16	-69	3189	9.82	11.08	0
130	SLE FR 2	16	-38	3182	8.65	11.12	0
130	SLE FR 3	16	-69	3203	9.9	11.14	0
130	SLE FR 4	16	-39	3305	9.08	11.6	0
130	SLE FR 5	16	-70	3327	10.34	11.62	0
130	SLE FR 6	17	-71	3395	10.55	11.89	0
130	SLE QP 1	16	-69	3189	9.82	11.08	0
130	SLE QP 2	16	-71	3313	10.25	11.57	0
130	SLD 1	30	302	3603	9.4	22.69	0.01
130	SLD 2	30	302	3603	9.4	22.69	0.01
130	SLD 3	28	-93	3482	24.38	20.54	0.01
130	SLD 4	28	-93	3482	24.38	20.54	0.01
130	SLD 5	24	640	3583	-12.72	18.16	0.01
130	SLD 6	24	640	3583	-12.72	18.16	0.01
130	SLD 7	16	-676	3181	37.21	11.01	0
130	SLD 8	16	-676	3181	37.21	11.01	0
130	SLD 9	17	535	3445	-16.7	12.13	0.01
130	SLD 10	17	535	3445	-16.7	12.13	0.01
130	SLD 11	8	-781	3043	33.23	4.98	0
130	SLD 12	8	-781	3043	33.23	4.98	0
130	SLD 13	5	-48	3143	-3.87	2.59	0
130	SLD 14	5	-48	3143	-3.87	2.59	0
130	SLD 15	2	-443	3023	11.11	0.45	0
130	SLD 16	2	-443	3023	11.11	0.45	0
130	SLV 1	50	822	4000	7.92	37.78	0.01
130	SLV 2	50	822	4000	7.92	37.78	0.01
130	SLV 3	43	-130	3708	44.15	32.49	0.01
130	SLV 4	43	-130	3708	44.15	32.49	0.01
130	SLV 5	36	1642	3962	-45.39	27.45	0.01
130	SLV 6	36	1642	3962	-45.39	27.45	0.01
130	SLV 7	15	-1533	2988	75.37	9.83	0
130	SLV 8	15	-1533	2988	75.37	9.83	0
130	SLV 9	18	1392	3637	-54.86	13.3	0.01
130	SLV 10	18	1392	3637	-54.86	13.3	0.01
130	SLV 11	-3	-1783	2664	65.9	-4.31	0
130	SLV 12	-3	-1783	2664	65.9	-4.31	0
130	SLV 13	-11	-11	2918	-23.65	-9.36	0
130	SLV 14	-11	-11	2918	-23.65	-9.36	0
130	SLV 15	-17	-963	2626	12.58	-14.65	-0.01
130	SLV 16	-17	-963	2626	12.58	-14.65	-0.01
131	SLU 1	3	-647	5779	34.41	3.28	-0.01
131	SLU 2	3	-759	5894	38.49	3.5	-0.01
131	SLU 3	3	-665	5947	35.66	3.43	-0.01
131	SLU 4	3	-732	6015	38.11	3.56	-0.01
131	SLU 5	3	-771	6007	39.34	3.59	-0.01
131	SLU 6	3	-677	6060	36.51	3.52	-0.01
131	SLU 7	3	-744	6128	38.96	3.65	-0.01
131	SLU 8	3	-671	6005	36.11	3.47	-0.01
131	SLU 9	3	-738	6074	38.56	3.6	-0.01
131	SLU 10	0	-849	6768	43.89	1.41	0
131	SLU 11	0	-755	6820	41.05	1.34	0
131	SLU 12	0	-822	6889	43.51	1.47	0
131	SLU 13	0	-861	6881	44.74	1.5	0
131	SLU 14	0	-767	6933	41.9	1.43	0
131	SLU 15	0	-834	7002	44.36	1.56	0
131	SLU 16	0	-761	6879	41.5	1.38	0
131	SLU 17	0	-828	6948	43.95	1.51	0
131	SLU 18	-1	-776	7027	42.11	0.29	0.01
131	SLU 19	-1	-843	7096	44.56	0.43	0.01
131	SLU 20	-1	-788	7140	42.96	0.39	0.01
131	SLU 21	-1	-855	7209	45.41	0.52	0.01
131	SLU 22	3	-724	6490	39.25	3.21	-0.01
131	SLU 23	3	-835	6604	43.33	3.43	-0.01
131	SLU 24	3	-742	6657	40.5	3.35	-0.01
131	SLU 25	3	-809	6726	42.96	3.49	-0.01
131	SLU 26	3	-847	6717	44.19	3.52	-0.01
131	SLU 27	3	-753	6770	41.35	3.45	-0.01
131	SLU 28	3	-820	6839	43.81	3.58	-0.01
131	SLU 29	3	-747	6716	40.95	3.39	-0.01
131	SLU 30	3	-814	6785	43.4	3.53	-0.01
131	SLU 31	0	-925	7478	48.73	1.34	0
131	SLU 32	0	-832	7531	45.9	1.26	0
131	SLU 33	0	-899	7600	48.35	1.4	0
131	SLU 34	0	-937	7591	49.58	1.43	0
131	SLU 35	0	-843	7644	46.75	1.36	0
131	SLU 36	0	-910	7713	49.2	1.49	0
131	SLU 37	0	-837	7590	46.34	1.3	0
131	SLU 38	0	-904	7658	48.8	1.44	0
131	SLU 39	-2	-852	7738	46.95	0.22	0.01
131	SLU 40	-2	-919	7807	49.4	0.35	0.01
131	SLU 41	-2	-864	7851	47.8	0.31	0.01
131	SLU 42	-1	-931	7920	50.25	0.45	0.01
131	SLU 43	4	-815	7269	43.07	4.29	-0.01
131	SLU 44	4	-927	7384	47.15	4.51	-0.02
131	SLU 45	4	-833	7437	44.32	4.43	-0.02
131	SLU 46	4	-900	7506	46.77	4.57	-0.02

Nodo	Cont.	Reazione a traslazione			Reazione a rotazione		
Ind.	N.br.	x	y	z	x	y	z
131	SLU 47	4	-939	7497	48	4.6	-0.02
131	SLU 48	4	-845	7550	45.17	4.53	-0.02
131	SLU 49	4	-912	7619	47.63	4.66	-0.02
131	SLU 50	4	-839	7495	44.77	4.47	-0.02
131	SLU 51	4	-906	7564	47.22	4.61	-0.02
131	SLU 52	1	-1017	8258	52.55	2.42	0
131	SLU 53	1	-924	8311	49.71	2.34	0
131	SLU 54	1	-991	8379	52.17	2.48	0
131	SLU 55	1	-1029	8371	53.4	2.51	0
131	SLU 56	1	-935	8424	50.57	2.44	0
131	SLU 57	1	-1002	8492	53.02	2.57	0
131	SLU 58	1	-929	8369	50.16	2.38	0
131	SLU 59	1	-996	8438	52.61	2.52	0
131	SLU 60	0	-944	8518	50.77	1.3	0
131	SLU 61	0	-1011	8586	53.22	1.43	0
131	SLU 62	0	-956	8631	51.62	1.4	0
131	SLU 63	0	-1023	8699	54.07	1.53	0
131	SLU 64	3	-892	7980	47.91	4.22	-0.01
131	SLU 65	4	-1003	8095	52	4.44	-0.01
131	SLU 66	4	-910	8147	49.16	4.36	-0.01
131	SLU 67	4	-977	8216	51.62	4.49	-0.01
131	SLU 68	4	-1015	8208	52.85	4.53	-0.02
131	SLU 69	4	-921	8260	50.02	4.46	-0.01
131	SLU 70	4	-988	8329	52.47	4.59	-0.02
131	SLU 71	4	-915	8206	49.61	4.4	-0.01
131	SLU 72	4	-982	8275	52.06	4.54	-0.02
131	SLU 73	1	-1093	8968	57.39	2.35	0
131	SLU 74	1	-1000	9021	54.56	2.27	0
131	SLU 75	1	-1067	9090	57.01	2.4	0
131	SLU 76	1	-1105	9081	58.24	2.44	0
131	SLU 77	1	-1011	9134	55.41	2.37	0
131	SLU 78	1	-1078	9203	57.86	2.5	0
131	SLU 79	1	-1005	9080	55	2.31	0
131	SLU 80	1	-1072	9149	57.46	2.45	0
131	SLU 81	-1	-1020	9228	55.61	1.23	0
131	SLU 82	-1	-1087	9297	58.07	1.36	0
131	SLU 83	-1	-1032	9341	56.46	1.32	0
131	SLU 84	-1	-1099	9410	58.92	1.46	0
131	SLE RA 1	3	-669	5982	35.79	3.26	-0.01
131	SLE RA 2	3	-744	6059	38.51	3.41	-0.01
131	SLE RA 3	3	-681	6094	36.63	3.36	-0.01
131	SLE RA 4	3	-726	6140	38.26	3.44	-0.01
131	SLE RA 5	3	-751	6134	39.08	3.47	-0.01
131	SLE RA 6	3	-689	6169	37.19	3.42	-0.01
131	SLE RA 7	3	-734	6215	38.83	3.51	-0.01
131	SLE RA 8	3	-685	6133	36.92	3.38	-0.01
131	SLE RA 9	3	-729	6179	38.56	3.47	-0.01
131	SLE RA 10	1	-804	6641	42.11	2.01	0
131	SLE RA 11	1	-741	6676	40.22	1.96	0
131	SLE RA 12	1	-786	6722	41.86	2.05	0
131	SLE RA 13	1	-811	6717	42.68	2.07	0
131	SLE RA 14	1	-749	6752	40.79	2.03	0
131	SLE RA 15	1	-794	6798	42.42	2.11	0
131	SLE RA 16	1	-745	6715	40.52	1.99	0
131	SLE RA 17	1	-789	6761	42.15	2.08	0
131	SLE RA 18	0	-755	6814	40.92	1.27	0
131	SLE RA 19	0	-800	6860	42.56	1.36	0
131	SLE RA 20	0	-763	6890	41.49	1.33	0
131	SLE RA 21	0	-807	6936	43.13	1.42	0
131	SLE FR 1	3	-669	5982	35.79	3.26	-0.01
131	SLE FR 2	3	-684	5997	36.33	3.29	-0.01
131	SLE FR 3	3	-672	6012	36.02	3.28	-0.01
131	SLE FR 4	2	-710	6247	37.87	2.69	-0.01
131	SLE FR 5	2	-698	6262	37.56	2.69	-0.01
131	SLE FR 6	1	-712	6398	38.36	2.26	0
131	SLE QP 1	3	-669	5982	35.79	3.26	-0.01
131	SLE QP 2	2	-695	6232	37.33	2.66	-0.01
131	SLD 1	30	-330	6464	24.55	27.92	-0.12
131	SLD 2	30	-330	6464	24.55	27.92	-0.12
131	SLD 3	33	-760	6751	40.27	30.6	-0.13
131	SLD 4	33	-760	6751	40.27	30.6	-0.13
131	SLD 5	6	67	5866	9.67	6.18	-0.02
131	SLD 6	6	67	5866	9.67	6.18	-0.02
131	SLD 7	16	-1367	6823	62.04	15.11	-0.06
131	SLD 8	16	-1367	6823	62.04	15.11	-0.06
131	SLD 9	-12	-23	5641	12.62	-9.79	0.05
131	SLD 10	-12	-23	5641	12.62	-9.79	0.05
131	SLD 11	-2	-1457	6597	64.99	-0.85	0.01
131	SLD 12	-2	-1457	6597	64.99	-0.85	0.01
131	SLD 13	-29	-630	5713	34.39	-25.28	0.12
131	SLD 14	-29	-630	5713	34.39	-25.28	0.12
131	SLD 15	-26	-1060	6000	50.1	-22.6	0.1
131	SLD 16	-26	-1060	6000	50.1	-22.6	0.1
131	SLV 1	68	164	6772	7.22	61.8	-0.27
131	SLV 2	68	164	6772	7.22	61.8	-0.27
131	SLV 3	74	-847	7458	44.2	68.13	-0.3
131	SLV 4	74	-847	7458	44.2	68.13	-0.3
131	SLV 5	11	1097	5354	-27.79	10.81	-0.04
131	SLV 6	11	1097	5354	-27.79	10.81	-0.04
131	SLV 7	34	-2275	7640	95.48	31.89	-0.14

Nodo	Cont.	Reazione a traslazione			Reazione a rotazione		
Ind.	N.br.	x	y	z	x	y	z
131	SLV 8	34	-2275	7640	95.48	31.89	-0.14
131	SLV 9	-30	885	4824	-20.82	-26.57	0.12
131	SLV 10	-30	885	4824	-20.82	-26.57	0.12
131	SLV 11	-7	-2487	7110	102.45	-5.49	0.03
131	SLV 12	-7	-2487	7110	102.45	-5.49	0.03
131	SLV 13	-71	-542	5006	30.46	-62.8	0.28
131	SLV 14	-71	-542	5006	30.46	-62.8	0.28
131	SLV 15	-64	-1554	5691	67.44	-56.48	0.25
131	SLV 16	-64	-1554	5691	67.44	-56.48	0.25
132	SLU 1	-1	47	4295	-14.08	-0.57	0
132	SLU 2	-1	278	4222	-23.72	-1.07	0
132	SLU 3	-1	61	4417	-15.41	-0.6	0
132	SLU 4	-1	200	4373	-21.2	-0.9	0
132	SLU 5	-1	292	4295	-24.85	-1.09	0
132	SLU 6	-1	75	4490	-16.54	-0.62	0
132	SLU 7	-1	214	4447	-22.32	-0.92	0
132	SLU 8	-1	75	4442	-16.34	-0.61	0
132	SLU 9	-1	213	4398	-22.12	-0.91	0
132	SLU 10	-1	305	4868	-27.24	-1.16	0
132	SLU 11	-1	88	5063	-18.93	-0.69	0
132	SLU 12	-1	227	5019	-24.71	-0.99	0
132	SLU 13	-1	319	4941	-28.36	-1.18	0
132	SLU 14	-1	102	5136	-20.05	-0.71	0
132	SLU 15	-1	241	5093	-25.84	-1.01	0
132	SLU 16	-1	102	5088	-19.85	-0.71	0
132	SLU 17	-1	240	5044	-25.64	-1.01	0
132	SLU 18	-1	85	5218	-19.1	-0.7	0
132	SLU 19	-1	224	5174	-24.89	-1	0
132	SLU 20	-1	99	5291	-20.23	-0.72	0
132	SLU 21	-1	238	5248	-26.01	-1.02	0
132	SLU 22	-1	76	4899	-17.71	-0.66	0
132	SLU 23	-1	307	4825	-27.35	-1.16	0
132	SLU 24	-1	91	5020	-19.04	-0.69	0
132	SLU 25	-1	229	4976	-24.82	-0.99	0
132	SLU 26	-1	321	4899	-28.47	-1.18	0
132	SLU 27	-1	104	5094	-20.16	-0.71	0
132	SLU 28	-1	243	5050	-25.95	-1.01	0
132	SLU 29	-1	104	5046	-19.96	-0.71	0
132	SLU 30	-1	243	5002	-25.74	-1	0
132	SLU 31	-1	334	5471	-30.86	-1.25	0
132	SLU 32	-1	118	5666	-22.55	-0.78	0
132	SLU 33	-1	256	5622	-28.34	-1.08	0
132	SLU 34	-1	348	5545	-31.99	-1.27	0
132	SLU 35	-1	132	5740	-23.68	-0.8	0
132	SLU 36	-1	270	5696	-29.46	-1.1	0
132	SLU 37	-1	131	5692	-23.48	-0.8	0
132	SLU 38	-1	270	5648	-29.26	-1.1	0
132	SLU 39	-1	115	5821	-22.73	-0.79	0
132	SLU 40	-1	253	5777	-28.51	-1.09	0
132	SLU 41	-1	129	5895	-23.86	-0.81	0
132	SLU 42	-1	267	5851	-29.64	-1.11	0
132	SLU 43	-1	51	5376	-17.06	-0.71	0
132	SLU 44	-1	282	5303	-26.7	-1.21	0
132	SLU 45	-1	65	5498	-18.39	-0.74	0
132	SLU 46	-1	204	5454	-24.18	-1.04	0
132	SLU 47	-1	295	5377	-27.83	-1.23	0
132	SLU 48	-1	79	5572	-19.52	-0.76	0
132	SLU 49	-1	218	5528	-25.3	-1.06	0
132	SLU 50	-1	79	5524	-19.32	-0.75	0
132	SLU 51	-1	217	5480	-25.1	-1.05	0
132	SLU 52	-1	309	5949	-30.22	-1.3	0
132	SLU 53	-1	92	6144	-21.91	-0.83	0
132	SLU 54	-1	231	6100	-27.69	-1.13	0
132	SLU 55	-1	323	6023	-31.35	-1.32	0
132	SLU 56	-1	106	6218	-23.04	-0.85	0
132	SLU 57	-1	245	6174	-28.82	-1.15	0
132	SLU 58	-1	106	6170	-22.83	-0.85	0
132	SLU 59	-1	244	6126	-28.62	-1.15	0
132	SLU 60	-1	89	6299	-22.09	-0.84	0
132	SLU 61	-1	228	6255	-27.87	-1.14	0
132	SLU 62	-1	103	6373	-23.21	-0.86	0
132	SLU 63	-1	242	6329	-29	-1.16	0
132	SLU 64	-1	80	5980	-20.69	-0.8	0
132	SLU 65	-1	311	5907	-30.33	-1.3	0
132	SLU 66	-1	94	6102	-22.02	-0.83	0
132	SLU 67	-1	233	6058	-27.8	-1.13	0
132	SLU 68	-1	325	5981	-31.46	-1.32	0
132	SLU 69	-1	108	6176	-23.15	-0.85	0
132	SLU 70	-1	247	6132	-28.93	-1.15	0
132	SLU 71	-1	108	6127	-22.94	-0.85	0
132	SLU 72	-1	246	6083	-28.73	-1.14	0
132	SLU 73	-1	338	6553	-33.84	-1.39	0
132	SLU 74	-1	122	6748	-25.53	-0.92	0
132	SLU 75	-1	260	6704	-31.32	-1.22	0
132	SLU 76	-1	352	6627	-34.97	-1.41	0
132	SLU 77	-1	136	6822	-26.66	-0.94	0
132	SLU 78	-1	274	6778	-32.44	-1.24	0
132	SLU 79	-1	135	6773	-26.46	-0.94	0
132	SLU 80	-1	274	6729	-32.24	-1.24	0
132	SLU 81	-1	119	6903	-25.71	-0.93	0

Nodo	Cont.	Reazione a traslazione			Reazione a rotazione		
Ind.	N.br.	x	y	z	x	y	z
132	SLU 82	-1	257	6859	-31.49	-1.23	0
132	SLU 83	-1	133	6977	-26.84	-0.95	0
132	SLU 84	-1	271	6933	-32.62	-1.25	0
132	SLE RA 1	-1	55	4467	-15.12	-0.6	0
132	SLE RA 2	-1	209	4419	-21.54	-0.93	0
132	SLE RA 3	-1	65	4549	-16	-0.62	0
132	SLE RA 4	-1	157	4519	-19.86	-0.81	0
132	SLE RA 5	-1	218	4468	-22.3	-0.94	0
132	SLE RA 6	-1	74	4598	-16.76	-0.63	0
132	SLE RA 7	-1	166	4568	-20.61	-0.83	0
132	SLE RA 8	-1	74	4566	-16.62	-0.63	0
132	SLE RA 9	-1	166	4536	-20.48	-0.83	0
132	SLE RA 10	-1	227	4849	-23.89	-0.99	0
132	SLE RA 11	-1	83	4979	-18.35	-0.68	0
132	SLE RA 12	-1	175	4950	-22.2	-0.88	0
132	SLE RA 13	-1	236	4898	-24.64	-1	0
132	SLE RA 14	-1	92	5028	-19.1	-0.69	0
132	SLE RA 15	-1	184	4999	-22.96	-0.89	0
132	SLE RA 16	-1	92	4996	-18.96	-0.69	0
132	SLE RA 17	-1	184	4967	-22.82	-0.89	0
132	SLE RA 18	-1	81	5083	-18.47	-0.68	0
132	SLE RA 19	-1	173	5053	-22.32	-0.88	0
132	SLE RA 20	-1	90	5132	-19.22	-0.7	0
132	SLE RA 21	-1	183	5102	-23.07	-0.9	0
132	SLE FR 1	-1	55	4467	-15.12	-0.6	0
132	SLE FR 2	-1	86	4458	-16.4	-0.66	0
132	SLE FR 3	-1	59	4487	-15.42	-0.6	0
132	SLE FR 4	-1	94	4642	-17.41	-0.69	0
132	SLE FR 5	-1	67	4672	-16.42	-0.63	0
132	SLE FR 6	-1	68	4775	-16.79	-0.64	0
132	SLE QP 1	-1	55	4467	-15.12	-0.6	0
132	SLE QP 2	-1	63	4652	-16.12	-0.62	0
132	SLD 1	7	91	4590	-17.1	6.01	0
132	SLD 2	7	91	4590	-17.1	6.01	0
132	SLD 3	9	-294	4428	-1.29	7.64	0
132	SLD 4	9	-294	4428	-1.29	7.64	0
132	SLD 5	-1	655	4879	-40.39	-1.1	0
132	SLD 6	-1	655	4879	-40.39	-1.1	0
132	SLD 7	5	-628	4339	12.3	4.32	0
132	SLD 8	5	-628	4339	12.3	4.32	0
132	SLD 9	-6	754	4965	-44.54	-5.57	0
132	SLD 10	-6	754	4965	-44.54	-5.57	0
132	SLD 11	0	-529	4425	8.15	-0.14	0
132	SLD 12	0	-529	4425	8.15	-0.14	0
132	SLD 13	-10	419	4876	-30.95	-8.88	0
132	SLD 14	-10	419	4876	-30.95	-8.88	0
132	SLD 15	-8	34	4714	-15.14	-7.26	0
132	SLD 16	-8	34	4714	-15.14	-7.26	0
132	SLV 1	18	133	4508	-18.5	15.28	0.01
132	SLV 2	18	133	4508	-18.5	15.28	0.01
132	SLV 3	23	-789	4122	19.25	19.38	0.01
132	SLV 4	23	-789	4122	19.25	19.38	0.01
132	SLV 5	-2	1481	5194	-74.09	-2.09	0.01
132	SLV 6	-2	1481	5194	-74.09	-2.09	0.01
132	SLV 7	13	-1590	3907	51.74	11.61	0
132	SLV 8	13	-1590	3907	51.74	11.61	0
132	SLV 9	-14	1716	5397	-83.99	-12.86	0
132	SLV 10	-14	1716	5397	-83.99	-12.86	0
132	SLV 11	1	-1356	4109	41.85	0.84	-0.01
132	SLV 12	1	-1356	4109	41.85	0.84	-0.01
132	SLV 13	-24	915	5182	-51.49	-20.63	-0.01
132	SLV 14	-24	915	5182	-51.49	-20.63	-0.01
132	SLV 15	-19	-7	4796	-13.74	-16.52	-0.01
132	SLV 16	-19	-7	4796	-13.74	-16.52	-0.01
133	SLU 1	4	544	6411	-33.52	2.25	0
133	SLU 2	7	603	6420	-36.45	5.42	0
133	SLU 3	5	563	6585	-34.56	2.33	0
133	SLU 4	6	598	6591	-36.32	4.23	0
133	SLU 5	7	614	6523	-37.01	5.47	0
133	SLU 6	5	574	6687	-35.12	2.38	0
133	SLU 7	6	609	6693	-36.88	4.28	0
133	SLU 8	5	566	6615	-34.65	2.34	0
133	SLU 9	6	601	6621	-36.4	4.24	0
133	SLU 10	7	693	7229	-41.81	5.83	0
133	SLU 11	5	653	7394	-39.92	2.74	0
133	SLU 12	7	688	7400	-41.67	4.64	0
133	SLU 13	8	704	7332	-42.37	5.88	0
133	SLU 14	5	663	7496	-40.48	2.79	0
133	SLU 15	7	699	7502	-42.24	4.69	0
133	SLU 16	5	655	7424	-40	2.75	0
133	SLU 17	7	691	7430	-41.76	4.65	0
133	SLU 18	5	673	7567	-41.17	2.84	0
133	SLU 19	7	708	7572	-42.93	4.74	0
133	SLU 20	6	683	7669	-41.73	2.88	0
133	SLU 21	7	719	7674	-43.49	4.78	0
133	SLU 22	5	630	7183	-38.58	2.64	0
133	SLU 23	7	689	7192	-41.5	5.81	0
133	SLU 24	5	649	7357	-39.62	2.72	0
133	SLU 25	7	684	7363	-41.37	4.62	0
133	SLU 26	7	700	7295	-42.07	5.85	0

Nodo	Cont.	Reazione a traslazione			Reazione a rotazione		
Ind.	N.br.	x	y	z	x	y	z
133	SLU 27	5	659	7459	-40.18	2.76	0
133	SLU 28	7	695	7465	-41.93	4.66	0
133	SLU 29	5	651	7388	-39.7	2.73	0
133	SLU 30	7	687	7393	-41.46	4.63	0
133	SLU 31	8	779	8001	-46.86	6.22	0
133	SLU 32	6	738	8166	-44.97	3.13	0
133	SLU 33	7	774	8172	-46.73	5.03	0
133	SLU 34	8	789	8104	-47.42	6.26	0
133	SLU 35	6	749	8268	-45.53	3.17	0
133	SLU 36	7	785	8274	-47.29	5.07	0
133	SLU 37	6	741	8197	-45.05	3.14	0
133	SLU 38	7	777	8202	-46.81	5.04	0
133	SLU 39	6	758	8339	-46.22	3.23	0
133	SLU 40	8	794	8344	-47.98	5.13	0
133	SLU 41	6	769	8441	-46.79	3.27	0
133	SLU 42	8	804	8447	-48.54	5.17	0
133	SLU 43	6	678	8069	-41.85	2.8	0
133	SLU 44	8	737	8079	-44.78	5.97	0
133	SLU 45	6	697	8244	-42.89	2.88	0
133	SLU 46	7	732	8249	-44.64	4.78	0
133	SLU 47	8	748	8181	-45.34	6.01	0
133	SLU 48	6	708	8346	-43.45	2.92	0
133	SLU 49	7	743	8351	-45.21	4.82	0
133	SLU 50	6	700	8274	-42.97	2.89	0
133	SLU 51	7	735	8280	-44.73	4.79	0
133	SLU 52	9	827	8888	-50.13	6.38	0
133	SLU 53	6	787	9053	-48.24	3.29	0
133	SLU 54	8	822	9058	-50	5.19	0
133	SLU 55	9	838	8990	-50.69	6.42	0
133	SLU 56	6	797	9155	-48.8	3.33	0
133	SLU 57	8	833	9160	-50.56	5.23	0
133	SLU 58	6	789	9083	-48.32	3.29	0
133	SLU 59	8	825	9089	-50.08	5.2	0
133	SLU 60	7	806	9225	-49.5	3.38	0
133	SLU 61	8	842	9231	-51.25	5.28	0
133	SLU 62	7	817	9327	-50.06	3.43	0
133	SLU 63	8	853	9333	-51.82	5.33	0
133	SLU 64	6	764	8842	-46.9	3.18	0
133	SLU 65	8	823	8851	-49.83	6.35	0
133	SLU 66	6	782	9016	-47.94	3.26	0
133	SLU 67	8	818	9021	-49.7	5.16	0
133	SLU 68	9	834	8953	-50.39	6.4	0
133	SLU 69	6	793	9118	-48.5	3.31	0
133	SLU 70	8	829	9124	-50.26	5.21	0
133	SLU 71	6	785	9046	-48.02	3.27	0
133	SLU 72	8	821	9052	-49.78	5.17	0
133	SLU 73	9	913	9660	-55.18	6.76	0
133	SLU 74	7	872	9825	-53.29	3.67	0
133	SLU 75	8	908	9830	-55.05	5.57	0
133	SLU 76	9	923	9762	-55.75	6.81	0
133	SLU 77	7	883	9927	-53.86	3.72	0
133	SLU 78	9	918	9933	-55.61	5.62	0
133	SLU 79	7	875	9855	-53.38	3.68	0
133	SLU 80	8	910	9861	-55.14	5.58	0
133	SLU 81	7	892	9997	-54.55	3.77	0
133	SLU 82	9	928	10003	-56.31	5.67	0
133	SLU 83	7	903	10100	-55.11	3.81	0
133	SLU 84	9	938	10105	-56.87	5.71	0
133	SLE RA 1	5	569	6632	-34.97	2.36	0
133	SLE RA 2	6	608	6638	-36.92	4.48	0
133	SLE RA 3	5	581	6748	-35.66	2.42	0
133	SLE RA 4	6	605	6751	-36.83	3.68	0
133	SLE RA 5	6	615	6706	-37.29	4.51	0
133	SLE RA 6	5	588	6816	-36.03	2.45	0
133	SLE RA 7	6	612	6820	-37.21	3.71	0
133	SLE RA 8	5	583	6768	-35.72	2.42	0
133	SLE RA 9	6	607	6772	-36.89	3.69	0
133	SLE RA 10	7	668	7177	-40.49	4.75	0
133	SLE RA 11	5	641	7287	-39.23	2.69	0
133	SLE RA 12	6	665	7291	-40.4	3.96	0
133	SLE RA 13	7	675	7245	-40.86	4.78	0
133	SLE RA 14	5	648	7355	-39.6	2.72	0
133	SLE RA 15	6	672	7359	-40.78	3.99	0
133	SLE RA 16	5	643	7307	-39.28	2.7	0
133	SLE RA 17	6	667	7311	-40.46	3.96	0
133	SLE RA 18	5	654	7402	-40.07	2.75	0
133	SLE RA 19	6	678	7406	-41.24	4.02	0
133	SLE RA 20	5	661	7470	-40.44	2.78	0
133	SLE RA 21	6	685	7474	-41.61	4.05	0
133	SLE FR 1	5	569	6632	-34.97	2.36	0
133	SLE FR 2	5	577	6633	-35.36	2.79	0
133	SLE FR 3	5	572	6659	-35.12	2.38	0
133	SLE FR 4	5	602	6864	-36.89	2.9	0
133	SLE FR 5	5	597	6890	-36.65	2.49	0
133	SLE FR 6	5	611	7017	-37.52	2.56	0
133	SLE QP 1	5	569	6632	-34.97	2.36	0
133	SLE QP 2	5	594	6863	-36.5	2.48	0
133	SLD 1	-12	644	5527	-37.7	22.18	0
133	SLD 2	-12	644	5527	-37.7	22.18	0
133	SLD 3	-18	271	5070	-19.11	16.99	0

Nodo	Cont.	Reazione a traslazione			Reazione a rotazione		
Ind.	N.br.	x	y	z	x	y	z
133	SLD 4	-18	271	5070	-19.11	16.99	0
133	SLD 5	9	1175	7154	-65.05	16.26	0
133	SLD 6	9	1175	7154	-65.05	16.26	0
133	SLD 7	-11	-69	5633	-3.09	-1.03	0
133	SLD 8	-11	-69	5633	-3.09	-1.03	0
133	SLD 9	20	1257	8093	-69.91	5.99	0
133	SLD 10	20	1257	8093	-69.91	5.99	0
133	SLD 11	1	13	6571	-7.94	-11.29	-0.01
133	SLD 12	1	13	6571	-7.94	-11.29	-0.01
133	SLD 13	27	918	8655	-53.88	-12.03	0
133	SLD 14	27	918	8655	-53.88	-12.03	0
133	SLD 15	21	545	8199	-35.3	-17.22	-0.01
133	SLD 16	21	545	8199	-35.3	-17.22	-0.01
133	SLV 1	-34	708	3739	-39.21	49.69	0.01
133	SLV 2	-34	708	3739	-39.21	49.69	0.01
133	SLV 3	-48	-163	2663	4.2	36.85	0.01
133	SLV 4	-48	-163	2663	4.2	36.85	0.01
133	SLV 5	15	1950	7558	-103.16	36.11	0.01
133	SLV 6	15	1950	7558	-103.16	36.11	0.01
133	SLV 7	-33	-954	3970	41.56	-6.68	-0.01
133	SLV 8	-33	-954	3970	41.56	-6.68	-0.01
133	SLV 9	43	2143	9755	-114.55	11.64	0.01
133	SLV 10	43	2143	9755	-114.55	11.64	0.01
133	SLV 11	-5	-761	6167	30.17	-31.15	-0.02
133	SLV 12	-5	-761	6167	30.17	-31.15	-0.02
133	SLV 13	58	1351	11063	-77.19	-31.89	-0.01
133	SLV 14	58	1351	11063	-77.19	-31.89	-0.01
133	SLV 15	44	480	9986	-33.78	-44.72	-0.01
133	SLV 16	44	480	9986	-33.78	-44.72	-0.01
134	SLU 1	1	61	688	-1.62	1.09	0.01
134	SLU 2	1	60	688	-1.57	1.12	0.01
134	SLU 3	1	64	696	-1.68	1.12	0.01
134	SLU 4	1	63	696	-1.66	1.14	0.01
134	SLU 5	1	62	694	-1.62	1.14	0.01
134	SLU 6	1	65	702	-1.73	1.14	0.01
134	SLU 7	1	65	702	-1.7	1.16	0.01
134	SLU 8	1	64	699	-1.71	1.13	0.01
134	SLU 9	1	64	699	-1.68	1.15	0.01
134	SLU 10	1	74	743	-2.06	1.17	0.02
134	SLU 11	1	78	751	-2.17	1.17	0.01
134	SLU 12	1	77	751	-2.14	1.19	0.01
134	SLU 13	1	76	749	-2.1	1.19	0.01
134	SLU 14	1	80	757	-2.22	1.19	0.01
134	SLU 15	1	79	757	-2.19	1.21	0.01
134	SLU 16	1	79	754	-2.19	1.18	0.01
134	SLU 17	1	78	754	-2.17	1.2	0.01
134	SLU 18	1	82	767	-2.31	1.17	0.01
134	SLU 19	2	81	767	-2.28	1.18	0.02
134	SLU 20	2	83	772	-2.36	1.19	0.01
134	SLU 21	2	83	772	-2.33	1.2	0.01
134	SLU 22	1	73	728	-1.96	1.21	0.02
134	SLU 23	1	72	729	-1.92	1.24	0.02
134	SLU 24	1	75	736	-2.03	1.24	0.02
134	SLU 25	1	75	737	-2	1.26	0.02
134	SLU 26	1	74	734	-1.96	1.26	0.02
134	SLU 27	1	77	742	-2.08	1.26	0.02
134	SLU 28	1	76	742	-2.05	1.28	0.02
134	SLU 29	1	76	740	-2.05	1.25	0.02
134	SLU 30	1	76	740	-2.03	1.27	0.02
134	SLU 31	2	86	784	-2.4	1.29	0.02
134	SLU 32	2	90	792	-2.52	1.29	0.02
134	SLU 33	2	89	792	-2.49	1.31	0.02
134	SLU 34	2	88	789	-2.45	1.31	0.02
134	SLU 35	2	91	797	-2.56	1.31	0.02
134	SLU 36	2	91	797	-2.53	1.33	0.02
134	SLU 37	2	91	795	-2.54	1.3	0.02
134	SLU 38	2	90	795	-2.51	1.32	0.02
134	SLU 39	2	93	807	-2.66	1.29	0.02
134	SLU 40	2	93	807	-2.63	1.3	0.02
134	SLU 41	2	95	813	-2.7	1.31	0.02
134	SLU 42	2	94	813	-2.68	1.32	0.02
134	SLU 43	2	75	881	-1.98	1.38	0.02
134	SLU 44	2	74	881	-1.94	1.41	0.02
134	SLU 45	2	78	889	-2.05	1.41	0.02
134	SLU 46	2	77	889	-2.02	1.43	0.02
134	SLU 47	2	76	886	-1.98	1.43	0.02
134	SLU 48	2	79	894	-2.1	1.43	0.02
134	SLU 49	2	79	894	-2.07	1.45	0.02
134	SLU 50	2	79	892	-2.07	1.42	0.02
134	SLU 51	2	78	892	-2.05	1.44	0.02
134	SLU 52	2	89	936	-2.42	1.46	0.02
134	SLU 53	2	92	944	-2.54	1.46	0.02
134	SLU 54	2	92	944	-2.51	1.48	0.02
134	SLU 55	2	90	941	-2.47	1.48	0.02
134	SLU 56	2	94	949	-2.58	1.48	0.02
134	SLU 57	2	93	949	-2.55	1.5	0.02
134	SLU 58	2	93	947	-2.56	1.47	0.02
134	SLU 59	2	93	947	-2.53	1.49	0.02
134	SLU 60	2	96	959	-2.68	1.45	0.02
134	SLU 61	2	95	959	-2.65	1.47	0.02

Nodo	Cont.	Reazione a traslazione			Reazione a rotazione		
Ind.	N.br.	x	y	z	x	y	z
134	SLU 62	2	98	965	-2.72	1.47	0.02
134	SLU 63	2	97	965	-2.7	1.49	0.02
134	SLU 64	2	87	921	-2.33	1.5	0.02
134	SLU 65	2	86	921	-2.28	1.53	0.02
134	SLU 66	2	90	929	-2.4	1.53	0.02
134	SLU 67	2	89	929	-2.37	1.55	0.02
134	SLU 68	2	88	927	-2.33	1.55	0.02
134	SLU 69	2	91	935	-2.44	1.55	0.02
134	SLU 70	2	91	935	-2.41	1.56	0.02
134	SLU 71	2	90	932	-2.42	1.54	0.02
134	SLU 72	2	90	932	-2.39	1.55	0.02
134	SLU 73	2	101	976	-2.77	1.58	0.02
134	SLU 74	2	104	984	-2.88	1.58	0.02
134	SLU 75	2	103	984	-2.85	1.6	0.02
134	SLU 76	2	102	982	-2.82	1.6	0.02
134	SLU 77	2	106	990	-2.93	1.6	0.02
134	SLU 78	2	105	990	-2.9	1.62	0.02
134	SLU 79	2	105	987	-2.91	1.59	0.02
134	SLU 80	2	104	987	-2.88	1.61	0.02
134	SLU 81	2	108	1000	-3.02	1.57	0.02
134	SLU 82	2	107	1000	-3	1.59	0.02
134	SLU 83	2	109	1005	-3.07	1.59	0.02
134	SLU 84	2	109	1005	-3.04	1.61	0.02
134	SLE RA 1	1	64	699	-1.72	1.13	0.01
134	SLE RA 2	1	64	700	-1.69	1.15	0.01
134	SLE RA 3	1	66	705	-1.76	1.15	0.01
134	SLE RA 4	1	66	705	-1.74	1.16	0.01
134	SLE RA 5	1	65	703	-1.72	1.16	0.01
134	SLE RA 6	1	67	709	-1.79	1.16	0.01
134	SLE RA 7	1	67	709	-1.77	1.17	0.01
134	SLE RA 8	1	67	707	-1.78	1.15	0.01
134	SLE RA 9	1	66	707	-1.76	1.16	0.01
134	SLE RA 10	1	73	736	-2.01	1.18	0.02
134	SLE RA 11	1	76	742	-2.08	1.18	0.01
134	SLE RA 12	1	75	742	-2.07	1.19	0.02
134	SLE RA 13	1	74	740	-2.04	1.19	0.02
134	SLE RA 14	1	77	745	-2.11	1.19	0.01
134	SLE RA 15	1	76	745	-2.1	1.21	0.02
134	SLE RA 16	1	76	744	-2.1	1.19	0.01
134	SLE RA 17	1	76	744	-2.08	1.2	0.01
134	SLE RA 18	1	78	752	-2.18	1.18	0.01
134	SLE RA 19	1	78	752	-2.16	1.19	0.02
134	SLE RA 20	1	79	756	-2.21	1.19	0.01
134	SLE RA 21	1	79	756	-2.19	1.2	0.02
134	SLE FR 1	1	64	699	-1.72	1.13	0.01
134	SLE FR 2	1	64	700	-1.71	1.13	0.01
134	SLE FR 3	1	65	701	-1.73	1.13	0.01
134	SLE FR 4	1	68	715	-1.85	1.15	0.01
134	SLE FR 5	1	69	717	-1.87	1.15	0.01
134	SLE FR 6	1	71	726	-1.95	1.15	0.01
134	SLE QP 1	1	64	699	-1.72	1.13	0.01
134	SLE QP 2	1	68	715	-1.85	1.14	0.01
134	SLD 1	11	107	736	-3.56	9.38	0.08
134	SLD 2	11	107	736	-3.56	9.38	0.08
134	SLD 3	12	9	715	0.77	10.28	0.09
134	SLD 4	12	9	715	0.77	10.28	0.09
134	SLD 5	3	230	753	-8.94	2.25	0.02
134	SLD 6	3	230	753	-8.94	2.25	0.02
134	SLD 7	6	-99	684	5.5	5.25	0.05
134	SLD 8	6	-99	684	5.5	5.25	0.05
134	SLD 9	-4	236	747	-9.21	-2.97	-0.02
134	SLD 10	-4	236	747	-9.21	-2.97	-0.02
134	SLD 11	0	-93	678	5.23	0.04	0.01
134	SLD 12	0	-93	678	5.23	0.04	0.01
134	SLD 13	-10	128	715	-4.48	-8	-0.06
134	SLD 14	-10	128	715	-4.48	-8	-0.06
134	SLD 15	-9	30	695	-0.15	-7.09	-0.05
134	SLD 16	-9	30	695	-0.15	-7.09	-0.05
134	SLV 1	24	160	764	-5.86	20.43	0.16
134	SLV 2	24	160	764	-5.86	20.43	0.16
134	SLV 3	27	-71	715	4.29	22.54	0.19
134	SLV 4	27	-71	715	4.29	22.54	0.19
134	SLV 5	4	446	805	-18.44	3.72	0.02
134	SLV 6	4	446	805	-18.44	3.72	0.02
134	SLV 7	13	-323	640	15.38	10.77	0.11
134	SLV 8	13	-323	640	15.38	10.77	0.11
134	SLV 9	-10	460	790	-19.09	-8.48	-0.08
134	SLV 10	-10	460	790	-19.09	-8.48	-0.08
134	SLV 11	-2	-309	626	14.74	-1.44	0.01
134	SLV 12	-2	-309	626	14.74	-1.44	0.01
134	SLV 13	-24	208	716	-8	-20.26	-0.16
134	SLV 14	-24	208	716	-8	-20.26	-0.16
134	SLV 15	-22	-23	666	2.15	-18.14	-0.13
134	SLV 16	-22	-23	666	2.15	-18.14	-0.13
135	SLU 1	21	-266	5359	12.08	14.76	0.19
135	SLU 2	22	-373	5456	16.61	15.15	0.19
135	SLU 3	22	-271	5512	12.35	15.15	0.19
135	SLU 4	22	-335	5570	15.07	15.39	0.19
135	SLU 5	22	-377	5555	16.81	15.41	0.19
135	SLU 6	22	-275	5611	12.56	15.4	0.2

Nodo	Cont.	Reazione a traslazione			Reazione a rotazione		
Ind.	N.br.	x	y	z	x	y	z
135	SLU 7	22	-339	5669	15.28	15.64	0.2
135	SLU 8	22	-274	5557	12.49	15.27	0.19
135	SLU 9	22	-338	5615	15.21	15.5	0.19
135	SLU 10	28	-406	6273	18.24	20.06	0.22
135	SLU 11	28	-304	6329	13.99	20.06	0.23
135	SLU 12	29	-368	6387	16.71	20.3	0.23
135	SLU 13	29	-409	6372	18.45	20.32	0.23
135	SLU 14	29	-308	6428	14.19	20.31	0.23
135	SLU 15	29	-372	6486	16.91	20.55	0.23
135	SLU 16	29	-307	6375	14.13	20.18	0.23
135	SLU 17	29	-371	6432	16.85	20.41	0.23
135	SLU 18	31	-313	6527	14.41	21.77	0.23
135	SLU 19	31	-377	6585	17.13	22.01	0.24
135	SLU 20	31	-317	6626	14.62	22.03	0.24
135	SLU 21	32	-381	6684	17.34	22.26	0.24
135	SLU 22	25	-286	6058	13.21	17.23	0.21
135	SLU 23	25	-393	6154	17.74	17.62	0.21
135	SLU 24	25	-291	6211	13.49	17.62	0.22
135	SLU 25	25	-355	6269	16.2	17.85	0.22
135	SLU 26	25	-397	6253	17.95	17.87	0.22
135	SLU 27	25	-295	6310	13.69	17.87	0.22
135	SLU 28	26	-359	6368	16.41	18.1	0.22
135	SLU 29	25	-294	6256	13.63	17.73	0.22
135	SLU 30	26	-358	6314	16.34	17.97	0.22
135	SLU 31	32	-426	6972	19.38	22.53	0.25
135	SLU 32	32	-324	7028	15.12	22.52	0.25
135	SLU 33	32	-388	7086	17.84	22.76	0.25
135	SLU 34	32	-430	7071	19.59	22.78	0.25
135	SLU 35	32	-328	7127	15.33	22.78	0.26
135	SLU 36	33	-392	7185	18.05	23.01	0.26
135	SLU 37	32	-327	7074	15.26	22.64	0.25
135	SLU 38	33	-391	7131	17.98	22.88	0.26
135	SLU 39	34	-333	7226	15.55	24.24	0.26
135	SLU 40	35	-397	7284	18.27	24.47	0.26
135	SLU 41	35	-337	7325	15.76	24.49	0.27
135	SLU 42	35	-401	7383	18.48	24.73	0.27
135	SLU 43	26	-339	6728	15.31	18.34	0.23
135	SLU 44	27	-446	6824	19.84	18.74	0.23
135	SLU 45	27	-344	6880	15.58	18.73	0.24
135	SLU 46	27	-408	6938	18.3	18.97	0.24
135	SLU 47	27	-450	6923	20.05	18.99	0.24
135	SLU 48	27	-348	6979	15.79	18.99	0.24
135	SLU 49	27	-412	7037	18.51	19.22	0.24
135	SLU 50	27	-347	6926	15.72	18.85	0.24
135	SLU 51	27	-411	6983	18.44	19.09	0.24
135	SLU 52	34	-479	7641	21.48	23.65	0.27
135	SLU 53	34	-377	7697	17.22	23.64	0.27
135	SLU 54	34	-441	7755	19.94	23.88	0.27
135	SLU 55	34	-482	7740	21.68	23.9	0.27
135	SLU 56	34	-381	7796	17.43	23.9	0.28
135	SLU 57	34	-445	7854	20.15	24.13	0.28
135	SLU 58	34	-380	7743	17.36	23.76	0.27
135	SLU 59	34	-444	7801	20.08	23.99	0.28
135	SLU 60	36	-386	7895	17.65	25.36	0.28
135	SLU 61	36	-450	7953	20.37	25.59	0.28
135	SLU 62	36	-390	7994	17.85	25.61	0.29
135	SLU 63	37	-454	8052	20.57	25.85	0.29
135	SLU 64	30	-359	7426	16.44	20.81	0.26
135	SLU 65	30	-466	7523	20.97	21.2	0.26
135	SLU 66	30	-364	7579	16.72	21.2	0.26
135	SLU 67	31	-428	7637	19.44	21.43	0.27
135	SLU 68	31	-470	7622	21.18	21.45	0.26
135	SLU 69	31	-368	7678	16.93	21.45	0.27
135	SLU 70	31	-432	7736	19.65	21.69	0.27
135	SLU 71	30	-367	7625	16.86	21.32	0.27
135	SLU 72	31	-431	7682	19.58	21.55	0.27
135	SLU 73	37	-499	8340	22.61	26.11	0.29
135	SLU 74	37	-397	8396	18.36	26.11	0.3
135	SLU 75	37	-461	8454	21.07	26.34	0.3
135	SLU 76	37	-503	8439	22.82	26.36	0.3
135	SLU 77	37	-401	8495	18.56	26.36	0.3
135	SLU 78	38	-465	8553	21.28	26.6	0.3
135	SLU 79	37	-400	8442	18.5	26.22	0.3
135	SLU 80	38	-464	8500	21.21	26.46	0.3
135	SLU 81	40	-406	8594	18.78	27.82	0.31
135	SLU 82	40	-470	8652	21.5	28.06	0.31
135	SLU 83	40	-410	8693	18.99	28.07	0.31
135	SLU 84	40	-474	8751	21.71	28.31	0.31
135	SLE RA 1	22	-272	5559	12.4	15.47	0.19
135	SLE RA 2	22	-343	5623	15.42	15.73	0.19
135	SLE RA 3	22	-275	5661	12.58	15.73	0.2
135	SLE RA 4	23	-318	5699	14.4	15.88	0.2
135	SLE RA 5	23	-346	5689	15.56	15.9	0.2
135	SLE RA 6	23	-278	5727	12.72	15.89	0.2
135	SLE RA 7	23	-321	5765	14.53	16.05	0.2
135	SLE RA 8	23	-277	5691	12.68	15.8	0.2
135	SLE RA 9	23	-320	5730	14.49	15.96	0.2
135	SLE RA 10	27	-365	6168	16.51	19	0.22
135	SLE RA 11	27	-297	6206	13.67	19	0.22
135	SLE RA 12	27	-340	6244	15.49	19.15	0.22

Nodo	Cont.	Reazione a traslazione			Reazione a rotazione		
Ind.	N.br.	x	y	z	x	y	z
135	SLE RA 13	27	-367	6234	16.65	19.17	0.22
135	SLE RA 14	27	-300	6272	13.81	19.17	0.22
135	SLE RA 15	27	-342	6310	15.63	19.32	0.22
135	SLE RA 16	27	-299	6236	13.77	19.08	0.22
135	SLE RA 17	27	-342	6274	15.58	19.23	0.22
135	SLE RA 18	29	-303	6337	13.96	20.14	0.23
135	SLE RA 19	29	-346	6376	15.77	20.3	0.23
135	SLE RA 20	29	-306	6403	14.1	20.31	0.23
135	SLE RA 21	29	-348	6442	15.91	20.47	0.23
135	SLE FR 1	22	-272	5559	12.4	15.47	0.19
135	SLE FR 2	22	-286	5572	13	15.52	0.19
135	SLE FR 3	22	-273	5585	12.46	15.53	0.19
135	SLE FR 4	24	-296	5805	13.47	16.92	0.2
135	SLE FR 5	24	-282	5819	12.92	16.94	0.2
135	SLE FR 6	25	-288	5948	13.18	17.8	0.21
135	SLE QP 1	22	-272	5559	12.4	15.47	0.19
135	SLE QP 2	24	-281	5793	12.87	16.87	0.2
135	SLD 1	46	-220	5309	10.05	36.27	0.35
135	SLD 2	46	-220	5309	10.05	36.27	0.35
135	SLD 3	50	-643	5598	27.96	39.29	0.31
135	SLD 4	50	-643	5598	27.96	39.29	0.31
135	SLD 5	25	379	5211	-15.14	18.12	0.3
135	SLD 6	25	379	5211	-15.14	18.12	0.3
135	SLD 7	38	-1031	6171	44.55	28.16	0.18
135	SLD 8	38	-1031	6171	44.55	28.16	0.18
135	SLD 9	10	469	5414	-18.82	5.57	0.22
135	SLD 10	10	469	5414	-18.82	5.57	0.22
135	SLD 11	23	-941	6374	40.87	15.61	0.11
135	SLD 12	23	-941	6374	40.87	15.61	0.11
135	SLD 13	-2	80	5988	-2.22	-5.55	0.09
135	SLD 14	-2	80	5988	-2.22	-5.55	0.09
135	SLD 15	2	-343	6276	15.68	-2.54	0.06
135	SLD 16	2	-343	6276	15.68	-2.54	0.06
135	SLV 1	75	-137	4656	6.26	62.23	0.54
135	SLV 2	75	-137	4656	6.26	62.23	0.54
135	SLV 3	85	-1131	5340	48.34	69.5	0.46
135	SLV 4	85	-1131	5340	48.34	69.5	0.46
135	SLV 5	26	1269	4414	-52.94	19.45	0.43
135	SLV 6	26	1269	4414	-52.94	19.45	0.43
135	SLV 7	56	-2043	6694	87.33	43.69	0.15
135	SLV 8	56	-2043	6694	87.33	43.69	0.15
135	SLV 9	-8	1481	4891	-61.6	-9.95	0.25
135	SLV 10	-8	1481	4891	-61.6	-9.95	0.25
135	SLV 11	22	-1832	7171	78.67	14.29	-0.02
135	SLV 12	22	-1832	7171	78.67	14.29	-0.02
135	SLV 13	-37	568	6245	-22.61	-35.77	-0.05
135	SLV 14	-37	568	6245	-22.61	-35.77	-0.05
135	SLV 15	-27	-426	6929	19.48	-28.5	-0.13
135	SLV 16	-27	-426	6929	19.48	-28.5	-0.13
136	SLU 1	31	517	6688	-11.4	24.95	-0.11
136	SLU 2	30	583	6647	-13.56	22.39	-0.1
136	SLU 3	32	544	6874	-12.17	25.65	-0.11
136	SLU 4	31	584	6850	-13.47	24.11	-0.11
136	SLU 5	30	605	6761	-14.24	22.77	-0.11
136	SLU 6	33	567	6988	-12.86	26.02	-0.11
136	SLU 7	32	607	6964	-14.15	24.49	-0.11
136	SLU 8	32	562	6916	-12.76	25.71	-0.11
136	SLU 9	31	601	6892	-14.06	24.17	-0.11
136	SLU 10	34	667	7465	-15.51	25.68	-0.12
136	SLU 11	36	629	7692	-14.13	28.93	-0.13
136	SLU 12	35	668	7668	-15.42	27.4	-0.12
136	SLU 13	34	689	7579	-16.2	26.06	-0.12
136	SLU 14	37	651	7806	-14.81	29.31	-0.13
136	SLU 15	36	691	7782	-16.11	27.78	-0.13
136	SLU 16	36	646	7734	-14.72	28.99	-0.13
136	SLU 17	35	686	7710	-16.02	27.46	-0.12
136	SLU 18	37	637	7856	-14.19	29.65	-0.13
136	SLU 19	36	677	7832	-15.49	28.11	-0.13
136	SLU 20	38	659	7970	-14.87	30.02	-0.13
136	SLU 21	37	699	7946	-16.17	28.49	-0.13
136	SLU 22	35	601	7481	-13.4	28.14	-0.12
136	SLU 23	34	667	7441	-15.56	25.58	-0.12
136	SLU 24	36	629	7668	-14.17	28.83	-0.13
136	SLU 25	35	668	7643	-15.47	27.3	-0.12
136	SLU 26	34	690	7555	-16.24	25.96	-0.12
136	SLU 27	37	651	7782	-14.86	29.21	-0.13
136	SLU 28	36	691	7758	-16.15	27.68	-0.13
136	SLU 29	36	646	7710	-14.77	28.89	-0.13
136	SLU 30	35	686	7685	-16.06	27.36	-0.12
136	SLU 31	38	751	8259	-17.52	28.87	-0.13
136	SLU 32	40	713	8486	-16.13	32.12	-0.14
136	SLU 33	39	752	8461	-17.43	30.59	-0.14
136	SLU 34	38	774	8373	-18.2	29.24	-0.13
136	SLU 35	41	735	8600	-16.81	32.5	-0.14
136	SLU 36	40	775	8576	-18.11	30.97	-0.14
136	SLU 37	40	730	8528	-16.72	32.18	-0.14
136	SLU 38	39	770	8503	-18.02	30.65	-0.14
136	SLU 39	41	721	8650	-16.19	32.83	-0.14
136	SLU 40	40	761	8626	-17.49	31.3	-0.14
136	SLU 41	42	743	8764	-16.87	33.21	-0.15

Nodo	Cont.	Reazione a traslazione			Reazione a rotazione		
Ind.	N.br.	x	y	z	x	y	z
136	SLU 42	41	783	8740	-18.17	31.68	-0.14
136	SLU 43	39	643	8422	-14.13	31.34	-0.14
136	SLU 44	38	709	8381	-16.3	28.78	-0.13
136	SLU 45	40	671	8608	-14.91	32.04	-0.14
136	SLU 46	39	710	8584	-16.2	30.5	-0.14
136	SLU 47	38	732	8495	-16.98	29.16	-0.13
136	SLU 48	41	693	8722	-15.59	32.42	-0.14
136	SLU 49	40	733	8698	-16.89	30.88	-0.14
136	SLU 50	40	688	8650	-15.5	32.1	-0.14
136	SLU 51	39	728	8626	-16.8	30.56	-0.14
136	SLU 52	42	793	9199	-18.25	32.07	-0.15
136	SLU 53	44	755	9426	-16.86	35.33	-0.16
136	SLU 54	43	794	9402	-18.16	33.79	-0.15
136	SLU 55	42	816	9313	-18.93	32.45	-0.15
136	SLU 56	45	777	9540	-17.54	35.7	-0.16
136	SLU 57	44	817	9516	-18.84	34.17	-0.15
136	SLU 58	45	772	9468	-17.45	35.39	-0.16
136	SLU 59	44	812	9444	-18.75	33.85	-0.15
136	SLU 60	45	763	9591	-16.92	36.04	-0.16
136	SLU 61	44	803	9566	-18.22	34.5	-0.16
136	SLU 62	46	785	9705	-17.61	36.42	-0.16
136	SLU 63	45	825	9680	-18.9	34.88	-0.16
136	SLU 64	43	727	9216	-16.13	34.53	-0.15
136	SLU 65	42	793	9175	-18.3	31.97	-0.15
136	SLU 66	44	755	9402	-16.91	35.23	-0.16
136	SLU 67	43	794	9378	-18.21	33.69	-0.15
136	SLU 68	42	816	9289	-18.98	32.35	-0.15
136	SLU 69	45	777	9516	-17.59	35.6	-0.16
136	SLU 70	44	817	9492	-18.89	34.07	-0.15
136	SLU 71	44	772	9444	-17.5	35.29	-0.16
136	SLU 72	43	812	9420	-18.8	33.75	-0.15
136	SLU 73	46	877	9993	-20.25	35.26	-0.16
136	SLU 74	48	839	10220	-18.86	38.51	-0.17
136	SLU 75	47	878	10196	-20.16	36.98	-0.17
136	SLU 76	46	900	10107	-20.93	35.64	-0.16
136	SLU 77	49	861	10334	-19.54	38.89	-0.17
136	SLU 78	48	901	10310	-20.84	37.36	-0.17
136	SLU 79	49	856	10262	-19.45	38.57	-0.17
136	SLU 80	48	896	10238	-20.75	37.04	-0.17
136	SLU 81	49	847	10384	-18.93	39.23	-0.17
136	SLU 82	48	887	10360	-20.22	37.69	-0.17
136	SLU 83	50	870	10498	-19.61	39.6	-0.17
136	SLU 84	49	909	10474	-20.9	38.07	-0.17
136	SLE RA 1	33	541	6915	-11.97	25.86	-0.11
136	SLE RA 2	31	585	6887	-13.41	24.15	-0.11
136	SLE RA 3	33	559	7039	-12.49	26.32	-0.12
136	SLE RA 4	32	586	7022	-13.35	25.3	-0.11
136	SLE RA 5	32	600	6964	-13.87	24.41	-0.11
136	SLE RA 6	33	574	7115	-12.94	26.58	-0.12
136	SLE RA 7	33	601	7099	-13.81	25.55	-0.11
136	SLE RA 8	33	571	7067	-12.88	26.36	-0.12
136	SLE RA 9	33	597	7050	-13.75	25.34	-0.11
136	SLE RA 10	34	641	7433	-14.71	26.34	-0.12
136	SLE RA 11	36	615	7584	-13.79	28.52	-0.13
136	SLE RA 12	35	642	7568	-14.65	27.49	-0.12
136	SLE RA 13	34	656	7509	-15.17	26.6	-0.12
136	SLE RA 14	36	630	7660	-14.24	28.77	-0.13
136	SLE RA 15	36	657	7644	-15.11	27.75	-0.12
136	SLE RA 16	36	627	7612	-14.18	28.56	-0.13
136	SLE RA 17	35	653	7596	-15.05	27.53	-0.12
136	SLE RA 18	36	621	7694	-13.83	28.99	-0.13
136	SLE RA 19	36	647	7677	-14.7	27.97	-0.13
136	SLE RA 20	37	636	7770	-14.29	29.24	-0.13
136	SLE RA 21	36	662	7753	-15.15	28.22	-0.13
136	SLE FR 1	33	541	6915	-11.97	25.86	-0.11
136	SLE FR 2	32	550	6909	-12.26	25.52	-0.11
136	SLE FR 3	33	547	6945	-12.15	25.96	-0.11
136	SLE FR 4	33	574	7143	-12.82	26.46	-0.12
136	SLE FR 5	34	571	7179	-12.71	26.9	-0.12
136	SLE FR 6	35	581	7304	-12.9	27.43	-0.12
136	SLE QP 1	33	541	6915	-11.97	25.86	-0.11
136	SLE QP 2	34	565	7148	-12.53	26.8	-0.12
136	SLD 1	70	927	8792	-22.87	56.73	-0.24
136	SLD 2	70	927	8792	-22.87	56.73	-0.24
136	SLD 3	62	564	8462	-11.62	50.84	-0.21
136	SLD 4	62	564	8462	-11.62	50.84	-0.21
136	SLD 5	56	1223	8142	-32.69	44.72	-0.2
136	SLD 6	56	1223	8142	-32.69	44.72	-0.2
136	SLD 7	31	15	7042	4.8	25.07	-0.1
136	SLD 8	31	15	7042	4.8	25.07	-0.1
136	SLD 9	37	1114	7255	-29.86	28.53	-0.13
136	SLD 10	37	1114	7255	-29.86	28.53	-0.13
136	SLD 11	11	-93	6154	7.63	8.88	-0.04
136	SLD 12	11	-93	6154	7.63	8.88	-0.04
136	SLD 13	5	565	5834	-13.44	2.76	-0.02
136	SLD 14	5	565	5834	-13.44	2.76	-0.02
136	SLD 15	-2	203	5504	-2.19	-3.13	0
136	SLD 16	-2	203	5504	-2.19	-3.13	0
136	SLV 1	118	1412	11000	-36.72	96.97	-0.4
136	SLV 2	118	1412	11000	-36.72	96.97	-0.4

Nodo	Cont.	Reazione a traslazione			Reazione a rotazione		
Ind.	N.br.	x	y	z	x	y	z
136	SLV 3	100	566	10221	-10.47	82.9	-0.34
136	SLV 4	100	566	10221	-10.47	82.9	-0.34
136	SLV 5	87	2101	9485	-59.6	69.2	-0.31
136	SLV 6	87	2101	9485	-59.6	69.2	-0.31
136	SLV 7	26	-717	6889	27.91	22.28	-0.08
136	SLV 8	26	-717	6889	27.91	22.28	-0.08
136	SLV 9	42	1847	7408	-52.97	31.32	-0.16
136	SLV 10	42	1847	7408	-52.97	31.32	-0.16
136	SLV 11	-19	-972	4811	34.54	-15.6	0.07
136	SLV 12	-19	-972	4811	34.54	-15.6	0.07
136	SLV 13	-32	563	4075	-14.59	-29.3	0.1
136	SLV 14	-32	563	4075	-14.59	-29.3	0.1
136	SLV 15	-51	-282	3296	11.66	-43.38	0.17
136	SLV 16	-51	-282	3296	11.66	-43.38	0.17
137	SLU 1	13	134	3273	-13.39	9.49	0
137	SLU 2	13	368	3181	-21.94	9.63	0.01
137	SLU 3	13	147	3368	-14.38	9.8	0.01
137	SLU 4	13	288	3313	-19.51	9.88	0.01
137	SLU 5	13	380	3242	-22.74	9.82	0.01
137	SLU 6	14	159	3429	-15.18	9.99	0.01
137	SLU 7	14	300	3374	-20.31	10.07	0.01
137	SLU 8	14	157	3395	-14.99	9.87	0.01
137	SLU 9	13	298	3340	-20.12	9.95	0.01
137	SLU 10	15	409	3662	-24.93	11.15	0.01
137	SLU 11	16	189	3850	-17.37	11.32	0.01
137	SLU 12	15	329	3794	-22.5	11.4	0.01
137	SLU 13	15	421	3723	-25.73	11.34	0.01
137	SLU 14	16	200	3911	-18.17	11.51	0.01
137	SLU 15	16	341	3855	-23.3	11.59	0.01
137	SLU 16	16	199	3877	-17.98	11.39	0.01
137	SLU 17	16	339	3821	-23.11	11.47	0.01
137	SLU 18	16	193	3961	-17.67	11.66	0.01
137	SLU 19	16	333	3906	-22.8	11.75	0.01
137	SLU 20	16	205	4022	-18.47	11.85	0.01
137	SLU 21	16	345	3967	-23.6	11.93	0.01
137	SLU 22	15	175	3724	-16.43	10.94	0.01
137	SLU 23	15	409	3631	-24.98	11.07	0.01
137	SLU 24	15	188	3818	-17.42	11.25	0.01
137	SLU 25	15	329	3763	-22.55	11.33	0.01
137	SLU 26	15	421	3692	-25.78	11.26	0.01
137	SLU 27	16	200	3879	-18.22	11.43	0.01
137	SLU 28	16	340	3824	-23.35	11.52	0.01
137	SLU 29	16	198	3846	-18.03	11.31	0.01
137	SLU 30	15	339	3790	-23.16	11.39	0.01
137	SLU 31	17	450	4113	-27.98	12.59	0.01
137	SLU 32	18	229	4300	-20.41	12.77	0.01
137	SLU 33	17	370	4244	-25.54	12.85	0.01
137	SLU 34	17	462	4174	-28.77	12.78	0.01
137	SLU 35	18	241	4361	-21.21	12.95	0.01
137	SLU 36	18	381	4306	-26.34	13.04	0.01
137	SLU 37	18	239	4327	-21.02	12.83	0.01
137	SLU 38	18	380	4272	-26.15	12.92	0.01
137	SLU 39	18	234	4412	-20.71	13.11	0.01
137	SLU 40	18	374	4356	-25.84	13.19	0.01
137	SLU 41	18	245	4473	-21.51	13.3	0.01
137	SLU 42	18	386	4417	-26.64	13.38	0.01
137	SLU 43	16	160	4101	-16.36	11.84	0.01
137	SLU 44	16	394	4008	-24.91	11.98	0.01
137	SLU 45	17	174	4196	-17.35	12.15	0.01
137	SLU 46	17	314	4140	-22.48	12.23	0.01
137	SLU 47	16	406	4069	-25.71	12.17	0.01
137	SLU 48	17	185	4257	-18.15	12.34	0.01
137	SLU 49	17	326	4201	-23.28	12.42	0.01
137	SLU 50	17	184	4223	-17.96	12.22	0.01
137	SLU 51	17	324	4167	-23.09	12.3	0.01
137	SLU 52	18	436	4490	-27.91	13.5	0.01
137	SLU 53	19	215	4677	-20.35	13.67	0.01
137	SLU 54	19	355	4622	-25.48	13.75	0.01
137	SLU 55	18	447	4551	-28.71	13.69	0.01
137	SLU 56	19	227	4738	-21.14	13.86	0.01
137	SLU 57	19	367	4683	-26.27	13.94	0.01
137	SLU 58	19	225	4705	-20.95	13.74	0.01
137	SLU 59	19	365	4649	-26.08	13.82	0.01
137	SLU 60	19	219	4789	-20.64	14.01	0.01
137	SLU 61	19	360	4733	-25.77	14.1	0.01
137	SLU 62	20	231	4850	-21.44	14.2	0.01
137	SLU 63	19	371	4794	-26.57	14.28	0.01
137	SLU 64	18	201	4551	-19.41	13.29	0.01
137	SLU 65	18	435	4459	-27.96	13.43	0.01
137	SLU 66	19	214	4646	-20.39	13.6	0.01
137	SLU 67	19	355	4590	-25.52	13.68	0.01
137	SLU 68	18	447	4520	-28.75	13.61	0.01
137	SLU 69	19	226	4707	-21.19	13.79	0.01
137	SLU 70	19	367	4652	-26.32	13.87	0.01
137	SLU 71	19	224	4673	-21	13.66	0.01
137	SLU 72	19	365	4618	-26.13	13.75	0.01
137	SLU 73	20	476	4940	-30.95	14.95	0.01
137	SLU 74	21	256	5127	-23.39	15.12	0.01
137	SLU 75	21	396	5072	-28.52	15.2	0.01
137	SLU 76	20	488	5001	-31.75	15.13	0.01

Nodo	Cont.	Reazione a traslazione			Reazione a rotazione		
Ind.	N.br.	x	y	z	x	y	z
137	SLU 77	21	267	5189	-24.19	15.31	0.01
137	SLU 78	21	408	5133	-29.32	15.39	0.01
137	SLU 79	21	266	5155	-24	15.18	0.01
137	SLU 80	21	406	5099	-29.13	15.27	0.01
137	SLU 81	21	260	5239	-23.68	15.46	0.01
137	SLU 82	21	400	5184	-28.81	15.54	0.01
137	SLU 83	22	272	5300	-24.48	15.65	0.01
137	SLU 84	21	412	5245	-29.61	15.73	0.01
137	SLE RA 1	14	146	3402	-14.26	9.9	0.01
137	SLE RA 2	14	302	3340	-19.96	10	0.01
137	SLE RA 3	14	155	3465	-14.92	10.11	0.01
137	SLE RA 4	14	248	3428	-18.34	10.17	0.01
137	SLE RA 5	14	310	3381	-20.49	10.12	0.01
137	SLE RA 6	14	162	3506	-15.45	10.24	0.01
137	SLE RA 7	14	256	3469	-18.87	10.29	0.01
137	SLE RA 8	14	161	3483	-15.32	10.15	0.01
137	SLE RA 9	14	255	3446	-18.74	10.21	0.01
137	SLE RA 10	15	329	3661	-21.96	11.01	0.01
137	SLE RA 11	15	182	3786	-16.91	11.12	0.01
137	SLE RA 12	15	276	3749	-20.33	11.18	0.01
137	SLE RA 13	15	337	3702	-22.49	11.13	0.01
137	SLE RA 14	15	190	3827	-17.45	11.25	0.01
137	SLE RA 15	15	284	3790	-20.87	11.3	0.01
137	SLE RA 16	15	189	3804	-17.32	11.17	0.01
137	SLE RA 17	15	282	3767	-20.74	11.22	0.01
137	SLE RA 18	16	185	3861	-17.11	11.35	0.01
137	SLE RA 19	16	279	3824	-20.53	11.41	0.01
137	SLE RA 20	16	193	3901	-17.64	11.48	0.01
137	SLE RA 21	16	286	3864	-21.06	11.53	0.01
137	SLE FR 1	14	146	3402	-14.26	9.9	0.01
137	SLE FR 2	14	177	3390	-15.4	9.92	0.01
137	SLE FR 3	14	149	3418	-14.47	9.95	0.01
137	SLE FR 4	14	189	3527	-16.26	10.36	0.01
137	SLE FR 5	14	161	3556	-15.33	10.39	0.01
137	SLE FR 6	15	165	3631	-15.69	10.63	0.01
137	SLE QP 1	14	146	3402	-14.26	9.9	0.01
137	SLE QP 2	14	157	3539	-15.12	10.34	0.01
137	SLD 1	26	530	3872	-28.64	19.95	0.01
137	SLD 2	26	530	3872	-28.64	19.95	0.01
137	SLD 3	23	144	3739	-14.69	18.05	0.01
137	SLD 4	23	144	3739	-14.69	18.05	0.01
137	SLD 5	21	855	3841	-40.33	16.11	0.01
137	SLD 6	21	855	3841	-40.33	16.11	0.01
137	SLD 7	14	-432	3398	6.17	9.77	0
137	SLD 8	14	-432	3398	6.17	9.77	0
137	SLD 9	15	747	3681	-36.4	10.91	0.01
137	SLD 10	15	747	3681	-36.4	10.91	0.01
137	SLD 11	7	-540	3238	10.1	4.57	0
137	SLD 12	7	-540	3238	10.1	4.57	0
137	SLD 13	5	171	3340	-15.54	2.63	0
137	SLD 14	5	171	3340	-15.54	2.63	0
137	SLD 15	3	-215	3207	-1.59	0.72	0
137	SLD 16	3	-215	3207	-1.59	0.72	0
137	SLV 1	41	1049	4330	-47.41	33	0.02
137	SLV 2	41	1049	4330	-47.41	33	0.02
137	SLV 3	36	119	4001	-13.92	28.34	0.02
137	SLV 4	36	119	4001	-13.92	28.34	0.02
137	SLV 5	31	1834	4276	-75.61	24.21	0.01
137	SLV 6	31	1834	4276	-75.61	24.21	0.01
137	SLV 7	12	-1264	3179	36.05	8.67	0
137	SLV 8	12	-1264	3179	36.05	8.67	0
137	SLV 9	16	1578	3900	-66.28	12.01	0.01
137	SLV 10	16	1578	3900	-66.28	12.01	0.01
137	SLV 11	-2	-1520	2803	45.38	-3.53	0
137	SLV 12	-2	-1520	2803	45.38	-3.53	0
137	SLV 13	-7	195	3078	-16.32	-7.66	-0.01
137	SLV 14	-7	195	3078	-16.32	-7.66	-0.01
137	SLV 15	-13	-734	2749	17.18	-12.32	-0.01
137	SLV 16	-13	-734	2749	17.18	-12.32	-0.01
138	SLU 1	2	-475	5698	2.34	2.82	-0.01
138	SLU 2	3	-595	5832	6.81	3.03	-0.01
138	SLU 3	3	-481	5871	1.87	2.97	-0.01
138	SLU 4	3	-554	5951	4.56	3.1	-0.01
138	SLU 5	3	-598	5950	6.42	3.13	-0.01
138	SLU 6	3	-484	5989	1.48	3.07	-0.01
138	SLU 7	3	-556	6070	4.17	3.2	-0.01
138	SLU 8	3	-480	5934	1.56	3.02	-0.01
138	SLU 9	3	-553	6014	4.24	3.15	-0.01
138	SLU 10	0	-652	6714	6.23	0.97	0
138	SLU 11	0	-538	6753	1.29	0.91	0
138	SLU 12	0	-610	6833	3.97	1.04	0
138	SLU 13	0	-654	6832	5.84	1.07	0
138	SLU 14	0	-540	6871	0.9	1.01	0
138	SLU 15	0	-613	6952	3.58	1.14	0
138	SLU 16	0	-537	6816	0.97	0.96	0
138	SLU 17	0	-609	6896	3.66	1.09	0
138	SLU 18	-2	-555	6958	1.51	-0.12	0.01
138	SLU 19	-2	-628	7038	4.19	0	0
138	SLU 20	-2	-558	7076	1.12	-0.02	0
138	SLU 21	-2	-630	7156	3.8	0.1	0

Nodo	Cont.	Reazione a traslazione			Reazione a rotazione		
Ind.	N.br.	x	y	z	x	y	z
138	SLU 22	2	-512	6423	1.17	2.73	-0.01
138	SLU 23	2	-632	6557	5.64	2.94	-0.01
138	SLU 24	2	-518	6596	0.7	2.88	-0.01
138	SLU 25	3	-591	6677	3.39	3.01	-0.01
138	SLU 26	3	-635	6675	5.25	3.04	-0.01
138	SLU 27	2	-521	6715	0.31	2.99	-0.01
138	SLU 28	3	-593	6795	3	3.11	-0.01
138	SLU 29	2	-517	6660	0.39	2.93	-0.01
138	SLU 30	3	-590	6740	3.07	3.06	-0.01
138	SLU 31	-1	-689	7439	5.06	0.88	0
138	SLU 32	-1	-575	7478	0.12	0.82	0
138	SLU 33	0	-647	7559	2.81	0.95	0
138	SLU 34	0	-691	7557	4.67	0.98	0
138	SLU 35	0	-577	7597	-0.27	0.93	0
138	SLU 36	0	-650	7677	2.42	1.05	0
138	SLU 37	-1	-574	7542	-0.19	0.88	0
138	SLU 38	0	-646	7622	2.49	1	0
138	SLU 39	-2	-592	7683	0.34	-0.21	0.01
138	SLU 40	-2	-665	7763	3.02	-0.08	0.01
138	SLU 41	-2	-595	7801	-0.05	-0.11	0.01
138	SLU 42	-2	-667	7882	2.63	0.02	0.01
138	SLU 43	3	-604	7158	3.44	3.69	-0.02
138	SLU 44	4	-725	7292	7.91	3.9	-0.02
138	SLU 45	3	-611	7331	2.97	3.85	-0.02
138	SLU 46	4	-683	7412	5.66	3.97	-0.02
138	SLU 47	4	-728	7410	7.52	4	-0.02
138	SLU 48	4	-614	7450	2.58	3.95	-0.02
138	SLU 49	4	-686	7530	5.27	4.07	-0.02
138	SLU 50	4	-610	7395	2.66	3.9	-0.02
138	SLU 51	4	-682	7475	5.34	4.02	-0.02
138	SLU 52	1	-781	8174	7.33	1.84	0
138	SLU 53	1	-667	8213	2.39	1.79	0
138	SLU 54	1	-740	8294	5.08	1.91	0
138	SLU 55	1	-784	8292	6.94	1.95	-0.01
138	SLU 56	1	-670	8332	2	1.89	0
138	SLU 57	1	-743	8412	4.69	2.01	-0.01
138	SLU 58	1	-666	8277	2.08	1.84	0
138	SLU 59	1	-739	8357	4.76	1.96	-0.01
138	SLU 60	-1	-685	8418	2.61	0.75	0
138	SLU 61	-1	-757	8498	5.29	0.88	0
138	SLU 62	-1	-688	8536	2.22	0.85	0
138	SLU 63	-1	-760	8617	4.9	0.98	0
138	SLU 64	3	-641	7884	2.27	3.61	-0.01
138	SLU 65	3	-762	8018	6.74	3.82	-0.02
138	SLU 66	3	-648	8057	1.81	3.76	-0.02
138	SLU 67	3	-720	8137	4.49	3.88	-0.02
138	SLU 68	3	-765	8136	6.35	3.92	-0.02
138	SLU 69	3	-651	8175	1.41	3.86	-0.02
138	SLU 70	3	-723	8256	4.1	3.99	-0.02
138	SLU 71	3	-647	8120	1.49	3.81	-0.02
138	SLU 72	3	-719	8200	4.17	3.94	-0.02
138	SLU 73	0	-818	8900	6.16	1.76	0
138	SLU 74	0	-704	8939	1.22	1.7	0
138	SLU 75	0	-777	9019	3.91	1.83	0
138	SLU 76	0	-821	9018	5.77	1.86	0
138	SLU 77	0	-707	9057	0.83	1.8	0
138	SLU 78	0	-779	9138	3.52	1.93	0
138	SLU 79	0	-703	9002	0.91	1.75	0
138	SLU 80	0	-776	9082	3.59	1.88	0
138	SLU 81	-1	-722	9144	1.44	0.66	0
138	SLU 82	-1	-794	9224	4.12	0.79	0
138	SLU 83	-1	-725	9262	1.05	0.77	0
138	SLU 84	-1	-797	9342	3.73	0.89	0
138	SLE RA 1	2	-485	5905	2	2.79	-0.01
138	SLE RA 2	3	-566	5994	4.99	2.93	-0.01
138	SLE RA 3	3	-490	6020	1.69	2.89	-0.01
138	SLE RA 4	3	-538	6074	3.48	2.98	-0.01
138	SLE RA 5	3	-567	6073	4.73	3	-0.01
138	SLE RA 6	3	-491	6099	1.43	2.96	-0.01
138	SLE RA 7	3	-540	6153	3.22	3.05	-0.01
138	SLE RA 8	3	-489	6062	1.48	2.93	-0.01
138	SLE RA 9	3	-537	6116	3.27	3.01	-0.01
138	SLE RA 10	1	-603	6582	4.6	1.56	0
138	SLE RA 11	1	-527	6608	1.31	1.52	0
138	SLE RA 12	1	-575	6662	3.1	1.61	0
138	SLE RA 13	1	-605	6661	4.34	1.63	0
138	SLE RA 14	1	-529	6687	1.05	1.59	0
138	SLE RA 15	1	-577	6741	2.83	1.67	0
138	SLE RA 16	1	-527	6650	1.1	1.56	0
138	SLE RA 17	1	-575	6704	2.88	1.64	0
138	SLE RA 18	0	-539	6745	1.45	0.83	0
138	SLE RA 19	0	-587	6798	3.24	0.92	0
138	SLE RA 20	0	-541	6824	1.19	0.9	0
138	SLE RA 21	0	-589	6877	2.98	0.98	0
138	SLE FR 1	2	-485	5905	2	2.79	-0.01
138	SLE FR 2	2	-501	5923	2.6	2.82	-0.01
138	SLE FR 3	2	-486	5936	1.9	2.82	-0.01
138	SLE FR 4	2	-517	6175	2.43	2.23	-0.01
138	SLE FR 5	2	-502	6188	1.73	2.23	-0.01
138	SLE FR 6	1	-512	6325	1.73	1.81	-0.01

Nodo	Cont.	Reazione a traslazione			Reazione a rotazione		
Ind.	N.br.	x	y	z	x	y	z
138	SLE QP 1	2	-485	5905	2	2.79	-0.01
138	SLE QP 2	2	-501	6157	1.84	2.2	-0.01
138	SLD 1	24	-98	6433	-13.71	23.78	-0.09
138	SLD 2	24	-98	6433	-13.71	23.78	-0.09
138	SLD 3	26	-543	6798	2.82	26.1	-0.1
138	SLD 4	26	-543	6798	2.82	26.1	-0.1
138	SLD 5	4	295	5685	-27.91	5.16	-0.02
138	SLD 6	4	295	5685	-27.91	5.16	-0.02
138	SLD 7	13	-1189	6904	27.21	12.89	-0.05
138	SLD 8	13	-1189	6904	27.21	12.89	-0.05
138	SLD 9	-10	187	5410	-23.54	-8.48	0.04
138	SLD 10	-10	187	5410	-23.54	-8.48	0.04
138	SLD 11	-1	-1298	6628	31.58	-0.75	0
138	SLD 12	-1	-1298	6628	31.58	-0.75	0
138	SLD 13	-23	-460	5515	0.85	-21.69	0.09
138	SLD 14	-23	-460	5515	0.85	-21.69	0.09
138	SLD 15	-21	-905	5881	17.39	-19.37	0.08
138	SLD 16	-21	-905	5881	17.39	-19.37	0.08
138	SLV 1	54	448	6799	-34.7	52.7	-0.21
138	SLV 2	54	448	6799	-34.7	52.7	-0.21
138	SLV 3	60	-600	7670	4.17	58.19	-0.23
138	SLV 4	60	-600	7670	4.17	58.19	-0.23
138	SLV 5	8	1372	5028	-68.07	9.02	-0.03
138	SLV 6	8	1372	5028	-68.07	9.02	-0.03
138	SLV 7	28	-2119	7933	61.49	27.33	-0.11
138	SLV 8	28	-2119	7933	61.49	27.33	-0.11
138	SLV 9	-25	1117	4381	-57.81	-22.92	0.1
138	SLV 10	-25	1117	4381	-57.81	-22.92	0.1
138	SLV 11	-5	-2375	7286	71.75	-4.61	0.02
138	SLV 12	-5	-2375	7286	71.75	-4.61	0.02
138	SLV 13	-57	-403	4643	-0.5	-53.78	0.22
138	SLV 14	-57	-403	4643	-0.5	-53.78	0.22
138	SLV 15	-51	-1450	5515	38.37	-48.29	0.19
138	SLV 16	-51	-1450	5515	38.37	-48.29	0.19
139	SLU 1	-1	-413	4301	33.03	-0.94	0
139	SLU 2	-1	-178	4182	23.61	-1.29	0
139	SLU 3	-1	-422	4429	34.38	-0.99	0
139	SLU 4	-1	-282	4358	28.74	-1.2	0
139	SLU 5	-1	-182	4261	24.47	-1.32	0
139	SLU 6	-1	-426	4508	35.24	-1.02	0
139	SLU 7	-1	-285	4437	29.59	-1.23	0
139	SLU 8	-1	-420	4460	34.75	-1.01	0
139	SLU 9	-1	-279	4388	29.1	-1.22	0
139	SLU 10	-2	-231	4850	29.04	-1.45	0
139	SLU 11	-2	-475	5097	39.81	-1.15	0
139	SLU 12	-2	-334	5025	34.16	-1.35	0
139	SLU 13	-2	-234	4929	29.9	-1.48	0
139	SLU 14	-2	-478	5176	40.67	-1.18	0
139	SLU 15	-2	-338	5104	35.02	-1.39	0
139	SLU 16	-2	-472	5127	40.18	-1.17	0
139	SLU 17	-2	-331	5056	34.53	-1.38	0
139	SLU 18	-2	-487	5255	40.79	-1.17	0
139	SLU 19	-2	-347	5183	35.14	-1.38	0
139	SLU 20	-2	-491	5334	41.64	-1.2	0
139	SLU 21	-2	-350	5263	35.99	-1.41	0
139	SLU 22	-1	-464	4925	38.39	-1.1	0
139	SLU 23	-2	-230	4805	28.97	-1.44	0
139	SLU 24	-1	-474	5053	39.74	-1.14	0
139	SLU 25	-2	-333	4981	34.09	-1.35	0
139	SLU 26	-2	-233	4885	29.83	-1.48	0
139	SLU 27	-2	-477	5132	40.6	-1.18	0
139	SLU 28	-2	-336	5060	34.95	-1.39	0
139	SLU 29	-2	-471	5083	40.1	-1.17	0
139	SLU 30	-2	-330	5012	34.46	-1.37	0
139	SLU 31	-2	-282	5473	34.4	-1.6	0
139	SLU 32	-2	-526	5720	45.17	-1.3	0
139	SLU 33	-2	-385	5649	39.52	-1.51	0
139	SLU 34	-2	-285	5552	35.26	-1.64	0
139	SLU 35	-2	-529	5800	46.03	-1.34	0
139	SLU 36	-2	-389	5728	40.38	-1.54	0
139	SLU 37	-2	-523	5751	45.53	-1.32	0
139	SLU 38	-2	-383	5679	39.89	-1.53	0
139	SLU 39	-2	-539	5878	46.14	-1.32	0
139	SLU 40	-2	-398	5807	40.49	-1.53	0
139	SLU 41	-2	-542	5958	47	-1.36	0
139	SLU 42	-2	-402	5886	41.35	-1.56	0
139	SLU 43	-2	-519	5378	41.1	-1.17	0
139	SLU 44	-2	-285	5259	31.69	-1.52	0
139	SLU 45	-2	-529	5506	42.46	-1.22	0
139	SLU 46	-2	-388	5434	36.81	-1.43	0
139	SLU 47	-2	-288	5338	32.54	-1.55	0
139	SLU 48	-2	-532	5585	43.31	-1.25	0
139	SLU 49	-2	-391	5513	37.67	-1.46	0
139	SLU 50	-2	-526	5536	42.82	-1.24	0
139	SLU 51	-2	-385	5465	37.17	-1.45	0
139	SLU 52	-2	-337	5926	37.11	-1.68	0
139	SLU 53	-2	-581	6173	47.89	-1.38	0
139	SLU 54	-2	-440	6102	42.24	-1.58	0
139	SLU 55	-2	-340	6005	37.97	-1.71	0
139	SLU 56	-2	-584	6253	48.74	-1.41	0

Nodo	Cont.	Reazione a traslazione			Reazione a rotazione		
Ind.	N.br.	x	y	z	x	y	z
139	SLU 57	-2	-444	6181	43.09	-1.62	0
139	SLU 58	-2	-578	6204	48.25	-1.4	0
139	SLU 59	-2	-438	6132	42.6	-1.61	0
139	SLU 60	-2	-594	6332	48.86	-1.4	0
139	SLU 61	-2	-453	6260	43.21	-1.6	0
139	SLU 62	-2	-597	6411	49.72	-1.43	0
139	SLU 63	-2	-457	6339	44.07	-1.64	0
139	SLU 64	-2	-570	6001	46.46	-1.33	0
139	SLU 65	-2	-336	5882	37.04	-1.67	0
139	SLU 66	-2	-580	6129	47.81	-1.37	0
139	SLU 67	-2	-439	6058	42.17	-1.58	0
139	SLU 68	-2	-339	5961	37.9	-1.71	0
139	SLU 69	-2	-583	6209	48.67	-1.41	0
139	SLU 70	-2	-443	6137	43.02	-1.62	0
139	SLU 71	-2	-577	6160	48.18	-1.39	0
139	SLU 72	-2	-437	6088	42.53	-1.6	0
139	SLU 73	-2	-388	6550	42.47	-1.83	0
139	SLU 74	-2	-632	6797	53.24	-1.53	0
139	SLU 75	-2	-492	6725	47.59	-1.74	0
139	SLU 76	-2	-392	6629	43.33	-1.86	0
139	SLU 77	-2	-636	6876	54.1	-1.57	0
139	SLU 78	-2	-495	6805	48.45	-1.77	0
139	SLU 79	-2	-629	6827	53.61	-1.55	0
139	SLU 80	-2	-489	6756	47.96	-1.76	0
139	SLU 81	-2	-645	6955	54.21	-1.55	0
139	SLU 82	-2	-504	6883	48.57	-1.76	0
139	SLU 83	-2	-648	7034	55.07	-1.59	0
139	SLU 84	-2	-508	6963	49.42	-1.79	0
139	SLE RA 1	-1	-427	4479	34.56	-0.99	0
139	SLE RA 2	-1	-271	4400	28.28	-1.22	0
139	SLE RA 3	-1	-434	4565	35.46	-1.02	0
139	SLE RA 4	-1	-340	4517	31.7	-1.16	0
139	SLE RA 5	-1	-273	4453	28.86	-1.24	0
139	SLE RA 6	-1	-436	4618	36.04	-1.04	0
139	SLE RA 7	-1	-342	4570	32.27	-1.18	0
139	SLE RA 8	-1	-432	4585	35.7	-1.03	0
139	SLE RA 9	-1	-338	4537	31.94	-1.17	0
139	SLE RA 10	-2	-306	4845	31.9	-1.32	0
139	SLE RA 11	-1	-469	5010	39.08	-1.12	0
139	SLE RA 12	-2	-375	4962	35.32	-1.26	0
139	SLE RA 13	-2	-308	4898	32.48	-1.35	0
139	SLE RA 14	-1	-471	5063	39.66	-1.15	0
139	SLE RA 15	-2	-377	5015	35.89	-1.28	0
139	SLE RA 16	-1	-467	5030	39.32	-1.14	0
139	SLE RA 17	-2	-373	4982	35.56	-1.28	0
139	SLE RA 18	-1	-477	5115	39.73	-1.14	0
139	SLE RA 19	-2	-383	5067	35.96	-1.28	0
139	SLE RA 20	-2	-479	5168	40.3	-1.16	0
139	SLE RA 21	-2	-386	5120	36.54	-1.3	0
139	SLE FR 1	-1	-427	4479	34.56	-0.99	0
139	SLE FR 2	-1	-396	4464	33.3	-1.03	0
139	SLE FR 3	-1	-428	4501	34.79	-1	0
139	SLE FR 4	-1	-411	4654	34.86	-1.08	0
139	SLE FR 5	-1	-443	4691	36.34	-1.04	0
139	SLE FR 6	-1	-452	4797	37.15	-1.06	0
139	SLE QP 1	-1	-427	4479	34.56	-0.99	0
139	SLE QP 2	-1	-442	4670	36.11	-1.03	0
139	SLD 1	5	-418	4521	21.75	4.65	0
139	SLD 2	5	-418	4521	21.75	4.65	0
139	SLD 3	6	-801	4373	37.26	6.09	0
139	SLD 4	6	-801	4373	37.26	6.09	0
139	SLD 5	-2	145	4851	8.28	-1.51	0
139	SLD 6	-2	145	4851	8.28	-1.51	0
139	SLD 7	3	-1129	4356	59.98	3.29	0
139	SLD 8	3	-1129	4356	59.98	3.29	0
139	SLD 9	-6	245	4985	12.24	-5.35	0
139	SLD 10	-6	245	4985	12.24	-5.35	0
139	SLD 11	-1	-1029	4490	63.94	-0.55	0
139	SLD 12	-1	-1029	4490	63.94	-0.55	0
139	SLD 13	-9	-84	4968	34.96	-8.15	0
139	SLD 14	-9	-84	4968	34.96	-8.15	0
139	SLD 15	-8	-466	4819	50.47	-6.71	0
139	SLD 16	-8	-466	4819	50.47	-6.71	0
139	SLV 1	13	-381	4329	1.62	12.58	0.01
139	SLV 2	13	-381	4329	1.62	12.58	0.01
139	SLV 3	17	-1300	3961	39.06	16.2	0.01
139	SLV 4	17	-1300	3961	39.06	16.2	0.01
139	SLV 5	-3	969	5125	-31.03	-2.44	0.01
139	SLV 6	-3	969	5125	-31.03	-2.44	0.01
139	SLV 7	10	-2093	3900	93.79	9.63	0
139	SLV 8	10	-2093	3900	93.79	9.63	0
139	SLV 9	-13	1209	5440	-21.57	-11.69	0.01
139	SLV 10	-13	1209	5440	-21.57	-11.69	0.01
139	SLV 11	0	-1854	4215	103.26	0.38	-0.01
139	SLV 12	0	-1854	4215	103.26	0.38	-0.01
139	SLV 13	-20	416	5379	33.16	-18.26	0
139	SLV 14	-20	416	5379	33.16	-18.26	0
139	SLV 15	-16	-503	5012	70.61	-14.64	-0.01
139	SLV 16	-16	-503	5012	70.61	-14.64	-0.01
140	SLU 1	3	327	6439	-11.25	1.5	0

Nodo	Cont.	Reazione a traslazione			Reazione a rotazione		
Ind.	N.br.	x	y	z	x	y	z
140	SLU 2	4	395	6424	-14.67	3.94	0
140	SLU 3	3	340	6618	-11.8	1.55	0
140	SLU 4	4	381	6609	-13.85	3.01	0
140	SLU 5	4	403	6530	-15.03	3.96	0
140	SLU 6	3	349	6724	-12.16	1.57	0
140	SLU 7	4	389	6715	-14.21	3.04	0
140	SLU 8	3	344	6652	-11.97	1.55	0
140	SLU 9	4	384	6643	-14.02	3.01	0
140	SLU 10	5	458	7247	-17.01	4.24	0
140	SLU 11	4	404	7440	-14.14	1.85	0
140	SLU 12	5	445	7431	-16.19	3.32	0
140	SLU 13	5	467	7353	-17.37	4.27	0
140	SLU 14	4	413	7547	-14.5	1.88	0
140	SLU 15	5	453	7538	-16.55	3.34	0
140	SLU 16	4	408	7475	-14.32	1.85	0
140	SLU 17	5	448	7465	-16.37	3.32	0
140	SLU 18	4	418	7614	-14.6	1.93	0
140	SLU 19	5	459	7605	-16.65	3.39	0
140	SLU 20	4	426	7721	-14.96	1.96	0
140	SLU 21	5	467	7712	-17.01	3.42	0
140	SLU 22	4	387	7225	-13.51	1.78	0
140	SLU 23	5	455	7209	-16.93	4.22	0
140	SLU 24	4	401	7403	-14.06	1.83	0
140	SLU 25	5	441	7394	-16.11	3.29	0
140	SLU 26	5	463	7316	-17.29	4.24	0
140	SLU 27	4	409	7509	-14.42	1.85	0
140	SLU 28	5	450	7500	-16.47	3.32	0
140	SLU 29	4	404	7437	-14.23	1.83	0
140	SLU 30	5	445	7428	-16.28	3.29	0
140	SLU 31	6	519	8032	-19.27	4.52	0
140	SLU 32	4	465	8226	-16.4	2.13	0
140	SLU 33	5	505	8216	-18.45	3.6	0
140	SLU 34	6	527	8138	-19.63	4.55	0
140	SLU 35	4	473	8332	-16.76	2.16	0
140	SLU 36	5	513	8323	-18.81	3.62	0
140	SLU 37	4	468	8260	-16.57	2.13	0
140	SLU 38	5	508	8251	-18.62	3.6	0
140	SLU 39	5	478	8400	-16.85	2.21	0
140	SLU 40	5	519	8390	-18.9	3.67	0
140	SLU 41	5	487	8506	-17.22	2.24	0
140	SLU 42	5	527	8497	-19.27	3.7	0
140	SLU 43	4	404	8102	-13.85	1.85	0
140	SLU 44	5	472	8087	-17.27	4.29	0
140	SLU 45	4	418	8280	-14.4	1.9	0
140	SLU 46	5	458	8271	-16.45	3.36	0
140	SLU 47	5	480	8193	-17.63	4.32	0
140	SLU 48	4	426	8387	-14.76	1.93	0
140	SLU 49	5	467	8378	-16.81	3.39	0
140	SLU 50	4	421	8315	-14.57	1.9	0
140	SLU 51	5	462	8305	-16.62	3.36	0
140	SLU 52	6	536	8909	-19.61	4.59	0
140	SLU 53	5	482	9103	-16.74	2.2	0
140	SLU 54	5	522	9094	-18.79	3.67	0
140	SLU 55	6	544	9015	-19.97	4.62	0
140	SLU 56	5	490	9209	-17.11	2.23	0
140	SLU 57	5	531	9200	-19.16	3.69	0
140	SLU 58	5	485	9137	-16.92	2.2	0
140	SLU 59	5	525	9128	-18.97	3.67	0
140	SLU 60	5	495	9277	-17.2	2.28	0
140	SLU 61	5	536	9268	-19.25	3.75	0
140	SLU 62	5	504	9383	-17.56	2.31	0
140	SLU 63	6	544	9374	-19.61	3.77	0
140	SLU 64	4	465	8887	-16.11	2.13	0
140	SLU 65	6	532	8872	-19.53	4.57	0
140	SLU 66	5	478	9066	-16.66	2.18	0
140	SLU 67	5	519	9056	-18.71	3.64	0
140	SLU 68	6	541	8978	-19.89	4.6	0
140	SLU 69	5	487	9172	-17.02	2.21	0
140	SLU 70	5	527	9163	-19.07	3.67	0
140	SLU 71	5	482	9100	-16.83	2.18	0
140	SLU 72	5	522	9091	-18.88	3.65	0
140	SLU 73	6	596	9694	-21.87	4.87	0
140	SLU 74	5	542	9888	-19	2.48	0
140	SLU 75	6	582	9879	-21.05	3.95	0
140	SLU 76	6	604	9801	-22.23	4.9	0
140	SLU 77	5	550	9995	-19.36	2.51	0
140	SLU 78	6	591	9985	-21.41	3.97	0
140	SLU 79	5	545	9922	-19.17	2.48	0
140	SLU 80	6	586	9913	-21.22	3.95	0
140	SLU 81	5	556	10062	-19.46	2.56	0
140	SLU 82	6	596	10053	-21.51	4.03	0
140	SLU 83	5	564	10169	-19.82	2.59	0
140	SLU 84	6	605	10159	-21.87	4.05	0
140	SLE RA 1	3	344	6664	-11.9	1.58	0
140	SLE RA 2	4	389	6653	-14.17	3.2	0
140	SLE RA 3	3	353	6783	-12.26	1.61	0
140	SLE RA 4	4	380	6777	-13.63	2.59	0
140	SLE RA 5	4	395	6724	-14.41	3.22	0
140	SLE RA 6	3	359	6854	-12.5	1.63	0
140	SLE RA 7	4	386	6847	-13.87	2.6	0

Nodo	Cont.	Reazione a traslazione			Reazione a rotazione		
Ind.	N.br.	x	y	z	x	y	z
140	SLE RA 8	3	355	6806	-12.38	1.61	0
140	SLE RA 9	4	382	6799	-13.74	2.59	0
140	SLE RA 10	5	432	7202	-15.74	3.41	0
140	SLE RA 11	4	396	7331	-13.82	1.81	0
140	SLE RA 12	4	423	7325	-15.19	2.79	0
140	SLE RA 13	5	437	7273	-15.98	3.42	0
140	SLE RA 14	4	401	7402	-14.06	1.83	0
140	SLE RA 15	4	428	7396	-15.43	2.81	0
140	SLE RA 16	4	398	7354	-13.94	1.81	0
140	SLE RA 17	4	425	7348	-15.31	2.79	0
140	SLE RA 18	4	405	7447	-14.13	1.87	0
140	SLE RA 19	4	432	7441	-15.49	2.84	0
140	SLE RA 20	4	411	7518	-14.37	1.88	0
140	SLE RA 21	4	438	7512	-15.73	2.86	0
140	SLE FR 1	3	344	6664	-11.9	1.58	0
140	SLE FR 2	3	353	6662	-12.35	1.9	0
140	SLE FR 3	3	346	6692	-11.99	1.58	0
140	SLE FR 4	4	371	6897	-13.02	1.99	0
140	SLE FR 5	3	365	6927	-12.66	1.67	0
140	SLE FR 6	4	375	7055	-13.01	1.72	0
140	SLE QP 1	3	344	6664	-11.9	1.58	0
140	SLE QP 2	3	362	6899	-12.56	1.66	0
140	SLD 1	-14	434	5500	-16.88	18.34	0.01
140	SLD 2	-14	434	5500	-16.88	18.34	0.01
140	SLD 3	-8	58	5112	1.2	13.04	0.01
140	SLD 4	-8	58	5112	1.2	13.04	0.01
140	SLD 5	-12	953	7068	-41.27	14.7	0.01
140	SLD 6	-12	953	7068	-41.27	14.7	0.01
140	SLD 7	10	-299	5774	18.98	-2.96	0
140	SLD 8	10	-299	5774	18.98	-2.96	0
140	SLD 9	-3	1023	8023	-44.11	6.29	0
140	SLD 10	-3	1023	8023	-44.11	6.29	0
140	SLD 11	19	-229	6729	16.14	-11.38	-0.01
140	SLD 12	19	-229	6729	16.14	-11.38	-0.01
140	SLD 13	14	667	8685	-26.33	-9.72	-0.01
140	SLD 14	14	667	8685	-26.33	-9.72	-0.01
140	SLD 15	21	291	8297	-8.25	-15.02	-0.01
140	SLD 16	21	291	8297	-8.25	-15.02	-0.01
140	SLV 1	-39	528	3630	-22.56	41.7	0.03
140	SLV 2	-39	528	3630	-22.56	41.7	0.03
140	SLV 3	-22	-350	2712	19.64	28.46	0.02
140	SLV 4	-22	-350	2712	19.64	28.46	0.02
140	SLV 5	-35	1742	7310	-79.56	33.76	0.02
140	SLV 6	-35	1742	7310	-79.56	33.76	0.02
140	SLV 7	21	-1181	4251	61.09	-10.38	-0.01
140	SLV 8	21	-1181	4251	61.09	-10.38	-0.01
140	SLV 9	-14	1906	9546	-86.22	13.71	0.01
140	SLV 10	-14	1906	9546	-86.22	13.71	0.01
140	SLV 11	42	-1017	6487	54.43	-30.43	-0.02
140	SLV 12	42	-1017	6487	54.43	-30.43	-0.02
140	SLV 13	29	1074	11085	-44.76	-25.14	-0.02
140	SLV 14	29	1074	11085	-44.76	-25.14	-0.02
140	SLV 15	46	197	10167	-2.57	-38.38	-0.03
140	SLV 16	46	197	10167	-2.57	-38.38	-0.03
141	SLU 1	1	171	948	-5.13	0.81	0.01
141	SLU 2	1	171	950	-5.11	0.83	0.01
141	SLU 3	1	178	966	-5.34	0.84	0.01
141	SLU 4	1	178	968	-5.33	0.85	0.01
141	SLU 5	1	176	963	-5.26	0.85	0.01
141	SLU 6	1	183	979	-5.49	0.86	0.01
141	SLU 7	1	183	980	-5.47	0.87	0.01
141	SLU 8	1	181	973	-5.42	0.85	0.01
141	SLU 9	1	181	974	-5.41	0.86	0.01
141	SLU 10	1	212	1047	-6.47	0.88	0.02
141	SLU 11	1	219	1064	-6.7	0.89	0.01
141	SLU 12	1	219	1065	-6.69	0.9	0.02
141	SLU 13	1	217	1060	-6.62	0.91	0.02
141	SLU 14	1	224	1077	-6.85	0.91	0.01
141	SLU 15	1	224	1078	-6.83	0.93	0.01
141	SLU 16	1	222	1071	-6.78	0.91	0.01
141	SLU 17	1	222	1072	-6.77	0.92	0.01
141	SLU 18	1	230	1087	-7.08	0.89	0.01
141	SLU 19	1	230	1088	-7.06	0.9	0.02
141	SLU 20	1	234	1100	-7.22	0.91	0.01
141	SLU 21	1	234	1101	-7.21	0.92	0.02
141	SLU 22	1	204	1032	-6.15	0.91	0.02
141	SLU 23	1	204	1034	-6.13	0.93	0.02
141	SLU 24	1	211	1050	-6.36	0.93	0.02
141	SLU 25	1	211	1051	-6.35	0.95	0.02
141	SLU 26	1	208	1046	-6.28	0.95	0.02
141	SLU 27	1	215	1063	-6.51	0.96	0.02
141	SLU 28	1	215	1064	-6.49	0.97	0.02
141	SLU 29	1	213	1057	-6.44	0.95	0.02
141	SLU 30	1	213	1058	-6.43	0.96	0.02
141	SLU 31	1	244	1131	-7.49	0.98	0.02
141	SLU 32	1	251	1148	-7.72	0.99	0.02
141	SLU 33	1	251	1149	-7.71	1	0.02
141	SLU 34	1	249	1144	-7.64	1	0.02
141	SLU 35	1	256	1160	-7.87	1.01	0.02
141	SLU 36	1	256	1161	-7.86	1.02	0.02

Nodo	Cont.	Reazione a traslazione			Reazione a rotazione		
Ind.	N.br.	x	y	z	x	y	z
141	SLU 37	1	254	1155	-7.8	1	0.02
141	SLU 38	1	254	1156	-7.79	1.01	0.02
141	SLU 39	1	262	1171	-8.1	0.98	0.02
141	SLU 40	1	262	1172	-8.09	0.99	0.02
141	SLU 41	1	267	1184	-8.24	1	0.02
141	SLU 42	1	267	1185	-8.23	1.02	0.02
141	SLU 43	1	212	1204	-6.32	1.02	0.02
141	SLU 44	1	212	1206	-6.3	1.04	0.02
141	SLU 45	1	219	1222	-6.53	1.05	0.02
141	SLU 46	1	219	1223	-6.52	1.06	0.02
141	SLU 47	1	216	1218	-6.45	1.06	0.02
141	SLU 48	1	223	1235	-6.68	1.07	0.02
141	SLU 49	1	223	1236	-6.66	1.08	0.02
141	SLU 50	1	221	1229	-6.61	1.06	0.02
141	SLU 51	1	221	1230	-6.6	1.08	0.02
141	SLU 52	1	252	1303	-7.66	1.1	0.02
141	SLU 53	1	259	1320	-7.89	1.1	0.02
141	SLU 54	1	259	1321	-7.88	1.12	0.02
141	SLU 55	1	257	1316	-7.81	1.12	0.02
141	SLU 56	1	264	1332	-8.04	1.12	0.02
141	SLU 57	1	264	1333	-8.02	1.14	0.02
141	SLU 58	1	262	1327	-7.97	1.12	0.02
141	SLU 59	1	262	1328	-7.96	1.13	0.02
141	SLU 60	1	270	1343	-8.27	1.1	0.02
141	SLU 61	1	270	1344	-8.25	1.11	0.02
141	SLU 62	1	275	1356	-8.41	1.12	0.02
141	SLU 63	1	275	1357	-8.4	1.13	0.02
141	SLU 64	1	244	1287	-7.34	1.12	0.02
141	SLU 65	1	244	1289	-7.32	1.14	0.02
141	SLU 66	1	251	1306	-7.55	1.15	0.02
141	SLU 67	1	251	1307	-7.54	1.16	0.02
141	SLU 68	1	249	1302	-7.47	1.16	0.02
141	SLU 69	1	256	1318	-7.7	1.17	0.02
141	SLU 70	1	256	1320	-7.68	1.18	0.02
141	SLU 71	1	254	1313	-7.63	1.16	0.02
141	SLU 72	1	254	1314	-7.62	1.17	0.02
141	SLU 73	1	285	1387	-8.68	1.19	0.02
141	SLU 74	1	292	1403	-8.91	1.2	0.02
141	SLU 75	1	292	1404	-8.9	1.21	0.02
141	SLU 76	1	289	1399	-8.83	1.21	0.02
141	SLU 77	1	296	1416	-9.06	1.22	0.02
141	SLU 78	1	296	1417	-9.05	1.23	0.02
141	SLU 79	1	294	1410	-8.99	1.21	0.02
141	SLU 80	1	294	1411	-8.98	1.22	0.02
141	SLU 81	1	302	1427	-9.29	1.19	0.02
141	SLU 82	1	302	1428	-9.28	1.21	0.02
141	SLU 83	1	307	1439	-9.43	1.22	0.02
141	SLU 84	1	307	1441	-9.42	1.23	0.02
141	SLE RA 1	1	181	972	-5.43	0.84	0.01
141	SLE RA 2	1	181	973	-5.41	0.85	0.01
141	SLE RA 3	1	185	984	-5.56	0.86	0.01
141	SLE RA 4	1	185	985	-5.56	0.86	0.01
141	SLE RA 5	1	184	982	-5.51	0.87	0.01
141	SLE RA 6	1	188	993	-5.66	0.87	0.01
141	SLE RA 7	1	188	993	-5.65	0.88	0.01
141	SLE RA 8	1	187	989	-5.62	0.87	0.01
141	SLE RA 9	1	187	990	-5.61	0.87	0.01
141	SLE RA 10	1	208	1038	-6.32	0.89	0.02
141	SLE RA 11	1	212	1049	-6.47	0.89	0.01
141	SLE RA 12	1	212	1050	-6.46	0.9	0.02
141	SLE RA 13	1	211	1047	-6.41	0.9	0.02
141	SLE RA 14	1	216	1058	-6.57	0.91	0.01
141	SLE RA 15	1	215	1058	-6.56	0.91	0.02
141	SLE RA 16	1	214	1054	-6.52	0.9	0.01
141	SLE RA 17	1	214	1055	-6.52	0.91	0.01
141	SLE RA 18	1	219	1065	-6.72	0.89	0.02
141	SLE RA 19	1	219	1066	-6.71	0.9	0.02
141	SLE RA 20	1	223	1073	-6.82	0.9	0.01
141	SLE RA 21	1	223	1074	-6.81	0.91	0.02
141	SLE FR 1	1	181	972	-5.43	0.84	0.01
141	SLE FR 2	1	181	972	-5.42	0.84	0.01
141	SLE FR 3	1	182	975	-5.46	0.84	0.01
141	SLE FR 4	1	192	1000	-5.81	0.86	0.01
141	SLE FR 5	1	194	1003	-5.85	0.86	0.01
141	SLE FR 6	1	200	1018	-6.07	0.86	0.01
141	SLE QP 1	1	181	972	-5.43	0.84	0.01
141	SLE QP 2	1	192	1000	-5.81	0.85	0.01
141	SLD 1	10	250	1032	-8.35	8.75	0.1
141	SLD 2	10	250	1032	-8.35	8.75	0.1
141	SLD 3	9	154	1004	-4.1	7.94	0.11
141	SLD 4	9	154	1004	-4.1	7.94	0.11
141	SLD 5	5	354	1053	-13.02	4.46	0.02
141	SLD 6	5	354	1053	-13.02	4.46	0.02
141	SLD 7	2	36	958	1.14	1.74	0.06
141	SLD 8	2	36	958	1.14	1.74	0.06
141	SLD 9	0	349	1042	-12.77	-0.03	-0.03
141	SLD 10	0	349	1042	-12.77	-0.03	-0.03
141	SLD 11	-4	30	947	1.39	-2.75	0.01
141	SLD 12	-4	30	947	1.39	-2.75	0.01
141	SLD 13	-7	231	996	-7.52	-6.23	-0.08

Nodo	Cont.	Reazione a traslazione			Reazione a rotazione		
Ind.	N.br.	x	y	z	x	y	z
141	SLD 14	-7	231	996	-7.52	-6.23	-0.08
141	SLD 15	-8	135	967	-3.28	-7.05	-0.07
141	SLD 16	-8	135	967	-3.28	-7.05	-0.07
141	SLV 1	23	326	1077	-11.76	19.35	0.21
141	SLV 2	23	326	1077	-11.76	19.35	0.21
141	SLV 3	20	103	1008	-1.81	17.43	0.23
141	SLV 4	20	103	1008	-1.81	17.43	0.23
141	SLV 5	11	572	1128	-22.69	9.3	0.04
141	SLV 6	11	572	1128	-22.69	9.3	0.04
141	SLV 7	3	-174	897	10.48	2.93	0.11
141	SLV 8	3	-174	897	10.48	2.93	0.11
141	SLV 9	-1	558	1102	-22.1	-1.22	-0.08
141	SLV 10	-1	558	1102	-22.1	-1.22	-0.08
141	SLV 11	-9	-187	872	11.06	-7.59	-0.01
141	SLV 12	-9	-187	872	11.06	-7.59	-0.01
141	SLV 13	-18	282	992	-9.82	-15.73	-0.2
141	SLV 14	-18	282	992	-9.82	-15.73	-0.2
141	SLV 15	-21	58	923	0.13	-17.64	-0.18
141	SLV 16	-21	58	923	0.13	-17.64	-0.18
142	SLU 1	14	-261	5564	13.17	11.63	0.18
142	SLU 2	15	-375	5671	17.99	12	0.19
142	SLU 3	15	-266	5729	13.49	11.91	0.19
142	SLU 4	15	-334	5793	16.38	12.13	0.19
142	SLU 5	15	-379	5778	18.22	12.18	0.19
142	SLU 6	15	-269	5836	13.72	12.1	0.19
142	SLU 7	15	-338	5900	16.61	12.32	0.2
142	SLU 8	15	-268	5778	13.64	12	0.19
142	SLU 9	15	-337	5842	16.53	12.22	0.19
142	SLU 10	21	-401	6542	19.63	16.31	0.23
142	SLU 11	21	-291	6600	15.13	16.22	0.23
142	SLU 12	21	-360	6665	18.02	16.44	0.23
142	SLU 13	21	-404	6649	19.86	16.49	0.23
142	SLU 14	21	-295	6707	15.36	16.41	0.23
142	SLU 15	21	-363	6772	18.25	16.63	0.24
142	SLU 16	21	-294	6649	15.28	16.31	0.23
142	SLU 17	21	-363	6714	18.17	16.53	0.23
142	SLU 18	23	-298	6809	15.51	17.79	0.24
142	SLU 19	23	-366	6873	18.4	18.01	0.24
142	SLU 20	23	-301	6916	15.75	17.97	0.25
142	SLU 21	23	-370	6980	18.64	18.19	0.25
142	SLU 22	17	-274	6319	14.28	13.63	0.21
142	SLU 23	17	-388	6426	19.1	14	0.21
142	SLU 24	17	-279	6484	14.6	13.91	0.22
142	SLU 25	18	-347	6548	17.49	14.14	0.22
142	SLU 26	18	-392	6533	19.33	14.18	0.22
142	SLU 27	18	-283	6591	14.83	14.1	0.22
142	SLU 28	18	-351	6655	17.72	14.32	0.22
142	SLU 29	17	-282	6533	14.75	14	0.22
142	SLU 30	18	-350	6597	17.64	14.22	0.22
142	SLU 31	23	-414	7297	20.74	18.31	0.25
142	SLU 32	23	-305	7355	16.24	18.22	0.26
142	SLU 33	23	-373	7419	19.12	18.45	0.26
142	SLU 34	23	-418	7404	20.97	18.49	0.26
142	SLU 35	23	-308	7462	16.47	18.41	0.26
142	SLU 36	24	-377	7526	19.36	18.63	0.26
142	SLU 37	23	-307	7404	16.39	18.31	0.26
142	SLU 38	23	-376	7468	19.28	18.53	0.26
142	SLU 39	25	-311	7564	16.62	19.79	0.27
142	SLU 40	26	-379	7628	19.51	20.01	0.27
142	SLU 41	25	-315	7671	16.86	19.97	0.27
142	SLU 42	26	-383	7735	19.75	20.19	0.28
142	SLU 43	18	-335	6974	16.75	14.43	0.23
142	SLU 44	18	-449	7081	21.56	14.8	0.23
142	SLU 45	18	-339	7139	17.06	14.72	0.24
142	SLU 46	18	-408	7204	19.95	14.94	0.24
142	SLU 47	19	-452	7188	21.79	14.99	0.24
142	SLU 48	18	-343	7246	17.3	14.9	0.24
142	SLU 49	19	-411	7311	20.18	15.12	0.24
142	SLU 50	18	-342	7188	17.21	14.8	0.24
142	SLU 51	19	-411	7253	20.1	15.02	0.24
142	SLU 52	24	-474	7953	23.2	19.11	0.27
142	SLU 53	24	-365	8011	18.7	19.03	0.28
142	SLU 54	24	-433	8075	21.59	19.25	0.28
142	SLU 55	24	-478	8060	23.43	19.3	0.28
142	SLU 56	24	-369	8118	18.93	19.21	0.28
142	SLU 57	24	-437	8182	21.82	19.43	0.28
142	SLU 58	24	-368	8060	18.85	19.11	0.28
142	SLU 59	24	-436	8124	21.74	19.33	0.28
142	SLU 60	26	-371	8219	19.09	20.59	0.29
142	SLU 61	26	-440	8283	21.97	20.81	0.29
142	SLU 62	26	-375	8326	19.32	20.77	0.29
142	SLU 63	27	-443	8390	22.21	20.99	0.29
142	SLU 64	20	-348	7729	17.86	16.43	0.26
142	SLU 65	21	-462	7836	22.67	16.8	0.26
142	SLU 66	21	-353	7894	18.17	16.72	0.26
142	SLU 67	21	-421	7958	21.06	16.94	0.27
142	SLU 68	21	-466	7943	22.9	16.99	0.26
142	SLU 69	21	-356	8001	18.4	16.9	0.27
142	SLU 70	21	-425	8065	21.29	17.12	0.27
142	SLU 71	21	-355	7943	18.32	16.8	0.27

Nodo	Cont.	Reazione a traslazione			Reazione a rotazione		
Ind.	N.br.	x	y	z	x	y	z
142	SLU 72	21	-424	8007	21.21	17.02	0.27
142	SLU 73	27	-488	8708	24.31	21.11	0.3
142	SLU 74	27	-378	8766	19.81	21.03	0.3
142	SLU 75	27	-447	8830	22.7	21.25	0.31
142	SLU 76	27	-491	8815	24.54	21.3	0.3
142	SLU 77	27	-382	8873	20.04	21.21	0.31
142	SLU 78	27	-450	8937	22.93	21.43	0.31
142	SLU 79	27	-381	8815	19.96	21.11	0.31
142	SLU 80	27	-450	8879	22.85	21.33	0.31
142	SLU 81	29	-385	8974	20.2	22.59	0.32
142	SLU 82	29	-453	9038	23.08	22.81	0.32
142	SLU 83	29	-388	9081	20.43	22.77	0.32
142	SLU 84	29	-457	9145	23.32	23	0.32
142	SLE RA 1	15	-265	5780	13.49	12.2	0.19
142	SLE RA 2	15	-341	5851	16.7	12.45	0.19
142	SLE RA 3	15	-268	5890	13.7	12.39	0.2
142	SLE RA 4	16	-313	5932	15.63	12.54	0.2
142	SLE RA 5	16	-343	5922	16.86	12.57	0.2
142	SLE RA 6	16	-270	5961	13.86	12.51	0.2
142	SLE RA 7	16	-316	6004	15.78	12.66	0.2
142	SLE RA 8	15	-270	5922	13.8	12.45	0.2
142	SLE RA 9	16	-315	5965	15.73	12.59	0.2
142	SLE RA 10	19	-358	6432	17.79	15.32	0.22
142	SLE RA 11	19	-285	6471	14.79	15.26	0.22
142	SLE RA 12	19	-331	6513	16.72	15.41	0.22
142	SLE RA 13	19	-360	6503	17.95	15.44	0.22
142	SLE RA 14	19	-288	6542	14.95	15.39	0.23
142	SLE RA 15	20	-333	6585	16.87	15.53	0.23
142	SLE RA 16	19	-287	6503	14.89	15.32	0.22
142	SLE RA 17	19	-332	6546	16.82	15.47	0.23
142	SLE RA 18	21	-289	6610	15.05	16.31	0.23
142	SLE RA 19	21	-335	6652	16.98	16.45	0.23
142	SLE RA 20	21	-292	6681	15.21	16.43	0.23
142	SLE RA 21	21	-337	6724	17.13	16.58	0.23
142	SLE FR 1	15	-265	5780	13.49	12.2	0.19
142	SLE FR 2	15	-280	5794	14.13	12.25	0.19
142	SLE FR 3	15	-266	5808	13.55	12.25	0.19
142	SLE FR 4	17	-287	6043	14.6	13.48	0.2
142	SLE FR 5	17	-273	6057	14.02	13.48	0.2
142	SLE FR 6	18	-277	6195	14.27	14.25	0.21
142	SLE QP 1	15	-265	5780	13.49	12.2	0.19
142	SLE QP 2	17	-272	6029	13.96	13.43	0.2
142	SLD 1	35	-220	5463	11.3	30.63	0.39
142	SLD 2	35	-220	5463	11.3	30.63	0.39
142	SLD 3	39	-652	5811	29.71	33.67	0.35
142	SLD 4	39	-652	5811	29.71	33.67	0.35
142	SLD 5	16	400	5331	-14.76	13.98	0.33
142	SLD 6	16	400	5331	-14.76	13.98	0.33
142	SLD 7	30	-1042	6491	46.6	24.11	0.18
142	SLD 8	30	-1042	6491	46.6	24.11	0.18
142	SLD 9	4	498	5566	-18.69	2.75	0.23
142	SLD 10	4	498	5566	-18.69	2.75	0.23
142	SLD 11	18	-944	6726	42.67	12.89	0.08
142	SLD 12	18	-944	6726	42.67	12.89	0.08
142	SLD 13	-5	108	6246	-1.79	-6.8	0.06
142	SLD 14	-5	108	6246	-1.79	-6.8	0.06
142	SLD 15	-1	-324	6594	16.61	-3.76	0.02
142	SLD 16	-1	-324	6594	16.61	-3.76	0.02
142	SLV 1	59	-149	4697	7.72	53.63	0.64
142	SLV 2	59	-149	4697	7.72	53.63	0.64
142	SLV 3	69	-1165	5523	50.98	60.93	0.54
142	SLV 4	69	-1165	5523	50.98	60.93	0.54
142	SLV 5	14	1306	4377	-53.52	14.41	0.49
142	SLV 6	14	1306	4377	-53.52	14.41	0.49
142	SLV 7	48	-2082	7130	90.68	38.76	0.15
142	SLV 8	48	-2082	7130	90.68	38.76	0.15
142	SLV 9	-14	1538	4928	-62.76	-11.9	0.26
142	SLV 10	-14	1538	4928	-62.76	-11.9	0.26
142	SLV 11	19	-1851	7680	81.44	12.46	-0.08
142	SLV 12	19	-1851	7680	81.44	12.46	-0.08
142	SLV 13	-35	621	6534	-23.06	-34.07	-0.13
142	SLV 14	-35	621	6534	-23.06	-34.07	-0.13
142	SLV 15	-25	-395	7360	20.19	-26.76	-0.24
142	SLV 16	-25	-395	7360	20.19	-26.76	-0.24
143	SLU 1	20	513	6779	-18.35	18.56	-0.06
143	SLU 2	19	591	6715	-20.93	16.84	-0.06
143	SLU 3	20	538	6977	-19.11	19.09	-0.06
143	SLU 4	20	585	6938	-20.65	18.05	-0.06
143	SLU 5	19	611	6840	-21.46	17.13	-0.06
143	SLU 6	21	558	7102	-19.64	19.38	-0.06
143	SLU 7	20	605	7064	-21.19	18.35	-0.06
143	SLU 8	20	552	7030	-19.42	19.14	-0.06
143	SLU 9	20	599	6992	-20.96	18.11	-0.06
143	SLU 10	22	679	7557	-23.95	19.3	-0.07
143	SLU 11	23	626	7820	-22.13	21.55	-0.07
143	SLU 12	23	673	7781	-23.67	20.52	-0.07
143	SLU 13	22	698	7683	-24.48	19.59	-0.07
143	SLU 14	23	645	7945	-22.66	21.84	-0.07
143	SLU 15	23	692	7907	-24.21	20.81	-0.07
143	SLU 16	23	639	7873	-22.44	21.6	-0.07

Nodo	Cont.	Reazione a traslazione			Reazione a rotazione		
Ind.	N.br.	x	y	z	x	y	z
143	SLU 17	23	687	7834	-23.98	20.57	-0.07
143	SLU 18	23	638	7983	-22.66	22.08	-0.07
143	SLU 19	23	685	7944	-24.21	21.04	-0.07
143	SLU 20	24	657	8109	-23.2	22.37	-0.07
143	SLU 21	23	705	8070	-24.74	21.33	-0.07
143	SLU 22	22	598	7598	-21.25	20.95	-0.07
143	SLU 23	22	676	7533	-23.83	19.23	-0.07
143	SLU 24	23	623	7796	-22.01	21.48	-0.07
143	SLU 25	23	670	7757	-23.55	20.45	-0.07
143	SLU 26	22	696	7659	-24.36	19.52	-0.07
143	SLU 27	23	643	7921	-22.54	21.77	-0.07
143	SLU 28	23	690	7883	-24.09	20.74	-0.07
143	SLU 29	23	637	7849	-22.32	21.53	-0.07
143	SLU 30	23	684	7810	-23.86	20.5	-0.07
143	SLU 31	24	764	8376	-26.85	21.69	-0.07
143	SLU 32	25	711	8638	-25.03	23.94	-0.08
143	SLU 33	25	758	8600	-26.57	22.91	-0.08
143	SLU 34	25	784	8502	-27.38	21.98	-0.08
143	SLU 35	26	730	8764	-25.56	24.23	-0.08
143	SLU 36	25	777	8725	-27.11	23.2	-0.08
143	SLU 37	26	725	8692	-25.34	23.99	-0.08
143	SLU 38	25	772	8653	-26.88	22.96	-0.08
143	SLU 39	26	723	8802	-25.56	24.47	-0.08
143	SLU 40	26	770	8763	-27.11	23.43	-0.08
143	SLU 41	26	743	8927	-26.1	24.76	-0.08
143	SLU 42	26	790	8889	-27.64	23.72	-0.08
143	SLU 43	25	637	8532	-22.86	23.31	-0.08
143	SLU 44	24	716	8468	-25.44	21.58	-0.07
143	SLU 45	25	663	8730	-23.62	23.84	-0.08
143	SLU 46	25	710	8691	-25.16	22.8	-0.08
143	SLU 47	25	735	8593	-25.97	21.88	-0.08
143	SLU 48	26	682	8855	-24.15	24.13	-0.08
143	SLU 49	25	729	8817	-25.7	23.09	-0.08
143	SLU 50	26	677	8783	-23.93	23.89	-0.08
143	SLU 51	25	724	8745	-25.47	22.86	-0.08
143	SLU 52	27	803	9310	-28.46	24.05	-0.08
143	SLU 53	28	750	9573	-26.64	26.3	-0.09
143	SLU 54	28	797	9534	-28.19	25.26	-0.08
143	SLU 55	27	823	9436	-28.99	24.34	-0.08
143	SLU 56	28	770	9698	-27.17	26.59	-0.09
143	SLU 57	28	817	9659	-28.72	25.56	-0.09
143	SLU 58	28	764	9626	-26.95	26.35	-0.09
143	SLU 59	28	811	9587	-28.49	25.32	-0.08
143	SLU 60	29	763	9736	-27.17	26.83	-0.09
143	SLU 61	28	810	9697	-28.72	25.79	-0.09
143	SLU 62	29	782	9862	-27.71	27.12	-0.09
143	SLU 63	28	829	9823	-29.26	26.08	-0.09
143	SLU 64	27	723	9351	-25.76	25.7	-0.08
143	SLU 65	27	801	9286	-28.34	23.98	-0.08
143	SLU 66	28	748	9549	-26.52	26.23	-0.09
143	SLU 67	28	795	9510	-28.06	25.19	-0.08
143	SLU 68	27	821	9412	-28.87	24.27	-0.08
143	SLU 69	28	767	9674	-27.05	26.52	-0.09
143	SLU 70	28	814	9635	-28.6	25.49	-0.09
143	SLU 71	28	762	9602	-26.83	26.28	-0.09
143	SLU 72	28	809	9563	-28.37	25.25	-0.08
143	SLU 73	29	889	10129	-31.36	26.44	-0.09
143	SLU 74	31	835	10391	-29.54	28.69	-0.09
143	SLU 75	30	882	10353	-31.08	27.66	-0.09
143	SLU 76	30	908	10255	-31.89	26.73	-0.09
143	SLU 77	31	855	10517	-30.07	28.98	-0.09
143	SLU 78	30	902	10478	-31.62	27.95	-0.09
143	SLU 79	31	849	10445	-29.85	28.74	-0.09
143	SLU 80	30	896	10406	-31.39	27.71	-0.09
143	SLU 81	31	848	10555	-30.07	29.22	-0.09
143	SLU 82	31	895	10516	-31.62	28.18	-0.09
143	SLU 83	31	867	10680	-30.61	29.51	-0.1
143	SLU 84	31	914	10642	-32.15	28.47	-0.09
143	SLE RA 1	21	537	7013	-19.18	19.24	-0.06
143	SLE RA 2	20	589	6970	-20.9	18.09	-0.06
143	SLE RA 3	21	554	7145	-19.68	19.6	-0.06
143	SLE RA 4	21	585	7119	-20.71	18.91	-0.06
143	SLE RA 5	20	603	7054	-21.25	18.29	-0.06
143	SLE RA 6	21	567	7229	-20.04	19.79	-0.06
143	SLE RA 7	21	598	7203	-21.07	19.1	-0.06
143	SLE RA 8	21	563	7180	-19.89	19.63	-0.06
143	SLE RA 9	21	595	7155	-20.92	18.94	-0.06
143	SLE RA 10	22	648	7532	-22.91	19.73	-0.07
143	SLE RA 11	23	612	7707	-21.7	21.24	-0.07
143	SLE RA 12	22	644	7681	-22.73	20.55	-0.07
143	SLE RA 13	22	661	7616	-23.27	19.93	-0.07
143	SLE RA 14	23	625	7790	-22.05	21.43	-0.07
143	SLE RA 15	23	657	7765	-23.08	20.74	-0.07
143	SLE RA 16	23	622	7742	-21.9	21.27	-0.07
143	SLE RA 17	22	653	7717	-22.93	20.58	-0.07
143	SLE RA 18	23	621	7816	-22.05	21.59	-0.07
143	SLE RA 19	23	652	7790	-23.09	20.9	-0.07
143	SLE RA 20	23	634	7899	-22.41	21.78	-0.07
143	SLE RA 21	23	665	7874	-23.44	21.09	-0.07
143	SLE FR 1	21	537	7013	-19.18	19.24	-0.06

Nodo	Cont.	Reazione a traslazione			Reazione a rotazione		
Ind.	N.br.	x	y	z	x	y	z
143	SLE FR 2	20	548	7004	-19.52	19.01	-0.06
143	SLE FR 3	21	542	7046	-19.32	19.32	-0.06
143	SLE FR 4	21	573	7245	-20.38	19.72	-0.06
143	SLE FR 5	21	567	7287	-20.18	20.02	-0.07
143	SLE FR 6	22	579	7414	-20.62	20.42	-0.07
143	SLE QP 1	21	537	7013	-19.18	19.24	-0.06
143	SLE QP 2	21	562	7254	-20.04	19.95	-0.06
143	SLD 1	42	960	8930	-32.93	41.13	-0.13
143	SLD 2	42	960	8930	-32.93	41.13	-0.13
143	SLD 3	34	585	8666	-20.66	35.87	-0.1
143	SLD 4	34	585	8666	-20.66	35.87	-0.1
143	SLD 5	39	1251	8158	-42.52	34.28	-0.13
143	SLD 6	39	1251	8158	-42.52	34.28	-0.13
143	SLD 7	14	-1	7276	-1.61	16.75	-0.03
143	SLD 8	14	-1	7276	-1.61	16.75	-0.03
143	SLD 9	29	1125	7231	-38.47	23.15	-0.1
143	SLD 10	29	1125	7231	-38.47	23.15	-0.1
143	SLD 11	3	-127	6350	2.44	5.62	0
143	SLD 12	3	-127	6350	2.44	5.62	0
143	SLD 13	8	540	5842	-19.43	4.02	-0.03
143	SLD 14	8	540	5842	-19.43	4.02	-0.03
143	SLD 15	0	164	5577	-7.16	-1.24	0
143	SLD 16	0	164	5577	-7.16	-1.24	0
143	SLV 1	71	1494	11183	-50.23	69.76	-0.21
143	SLV 2	71	1494	11183	-50.23	69.76	-0.21
143	SLV 3	52	616	10557	-21.54	56.94	-0.14
143	SLV 4	52	616	10557	-21.54	56.94	-0.14
143	SLV 5	65	2174	9382	-72.62	54.34	-0.22
143	SLV 6	65	2174	9382	-72.62	54.34	-0.22
143	SLV 7	2	-753	7296	23.03	11.59	0.02
143	SLV 8	2	-753	7296	23.03	11.59	0.02
143	SLV 9	41	1878	7212	-63.11	28.3	-0.15
143	SLV 10	41	1878	7212	-63.11	28.3	-0.15
143	SLV 11	-22	-1049	5126	32.53	-14.45	0.09
143	SLV 12	-22	-1049	5126	32.53	-14.45	0.09
143	SLV 13	-9	508	3951	-18.54	-17.04	0.01
143	SLV 14	-9	508	3951	-18.54	-17.04	0.01
143	SLV 15	-28	-370	3325	10.15	-29.87	0.08
143	SLV 16	-28	-370	3325	10.15	-29.87	0.08
144	SLU 1	10	-163	3439	18.57	7.56	0.01
144	SLU 2	10	75	3307	9.58	7.59	0.01
144	SLU 3	10	-165	3545	19.33	7.82	0.01
144	SLU 4	10	-22	3466	13.94	7.84	0.01
144	SLU 5	10	75	3378	10.07	7.75	0.01
144	SLU 6	10	-164	3616	19.82	7.98	0.01
144	SLU 7	10	-22	3536	14.43	8	0.01
144	SLU 8	10	-162	3580	19.54	7.88	0.01
144	SLU 9	10	-19	3501	14.15	7.9	0.01
144	SLU 10	11	69	3839	12.12	8.82	0.01
144	SLU 11	12	-170	4077	21.87	9.04	0.01
144	SLU 12	12	-28	3998	16.48	9.06	0.01
144	SLU 13	11	70	3909	12.61	8.98	0.01
144	SLU 14	12	-170	4147	22.36	9.2	0.01
144	SLU 15	12	-27	4068	16.97	9.22	0.01
144	SLU 16	12	-167	4112	22.08	9.1	0.01
144	SLU 17	12	-25	4032	16.69	9.12	0.01
144	SLU 18	12	-171	4199	22.2	9.31	0.01
144	SLU 19	12	-28	4120	16.81	9.33	0.01
144	SLU 20	12	-170	4269	22.68	9.47	0.01
144	SLU 21	12	-28	4190	17.29	9.49	0.01
144	SLU 22	11	-172	3935	21.24	8.73	0.01
144	SLU 23	11	66	3803	12.26	8.76	0.01
144	SLU 24	12	-174	4041	22.01	8.99	0.01
144	SLU 25	12	-31	3961	16.62	9.01	0.01
144	SLU 26	11	66	3873	12.74	8.92	0.01
144	SLU 27	12	-173	4111	22.49	9.15	0.01
144	SLU 28	12	-31	4032	17.1	9.16	0.01
144	SLU 29	12	-171	4075	22.21	9.05	0.01
144	SLU 30	12	-28	3996	16.82	9.07	0.01
144	SLU 31	13	60	4334	14.8	9.99	0.01
144	SLU 32	13	-179	4572	24.55	10.21	0.01
144	SLU 33	13	-37	4493	19.16	10.23	0.01
144	SLU 34	13	61	4404	15.28	10.14	0.01
144	SLU 35	13	-179	4642	25.03	10.37	0.01
144	SLU 36	13	-36	4563	19.64	10.39	0.01
144	SLU 37	13	-176	4607	24.76	10.27	0.01
144	SLU 38	13	-34	4528	19.36	10.29	0.01
144	SLU 39	14	-180	4694	24.87	10.48	0.01
144	SLU 40	13	-37	4615	19.48	10.5	0.01
144	SLU 41	14	-179	4764	25.36	10.64	0.01
144	SLU 42	14	-37	4685	19.97	10.66	0.01
144	SLU 43	12	-208	4302	23.22	9.43	0.01
144	SLU 44	12	29	4169	14.24	9.46	0.01
144	SLU 45	13	-211	4407	23.99	9.68	0.01
144	SLU 46	12	-68	4328	18.59	9.7	0.01
144	SLU 47	12	30	4240	14.72	9.62	0.01
144	SLU 48	13	-210	4478	24.47	9.84	0.01
144	SLU 49	13	-68	4399	19.08	9.86	0.01
144	SLU 50	13	-207	4442	24.19	9.75	0.01
144	SLU 51	12	-65	4363	18.8	9.76	0.01

Nodo	Cont.	Reazione a traslazione			Reazione a rotazione		
Ind.	N.br.	x	y	z	x	y	z
144	SLU 52	14	23	4701	16.78	10.68	0.01
144	SLU 53	14	-216	4939	26.53	10.91	0.01
144	SLU 54	14	-74	4860	21.14	10.93	0.01
144	SLU 55	14	24	4771	17.26	10.84	0.01
144	SLU 56	14	-216	5009	27.01	11.07	0.01
144	SLU 57	14	-73	4930	21.62	11.09	0.01
144	SLU 58	14	-213	4974	26.73	10.97	0.01
144	SLU 59	14	-71	4894	21.34	10.99	0.01
144	SLU 60	14	-217	5061	26.85	11.18	0.01
144	SLU 61	14	-74	4982	21.46	11.2	0.01
144	SLU 62	15	-216	5131	27.34	11.34	0.01
144	SLU 63	15	-74	5052	21.95	11.35	0.01
144	SLU 64	14	-217	4797	25.9	10.6	0.01
144	SLU 65	13	20	4665	16.91	10.63	0.01
144	SLU 66	14	-219	4903	26.66	10.85	0.01
144	SLU 67	14	-77	4823	21.27	10.87	0.01
144	SLU 68	14	21	4735	17.4	10.79	0.01
144	SLU 69	14	-219	4973	27.15	11.01	0.01
144	SLU 70	14	-76	4894	21.76	11.03	0.01
144	SLU 71	14	-216	4937	26.87	10.91	0.01
144	SLU 72	14	-74	4858	21.48	10.93	0.01
144	SLU 73	15	14	5196	19.45	11.85	0.01
144	SLU 74	16	-225	5434	29.2	12.08	0.01
144	SLU 75	15	-83	5355	23.81	12.1	0.01
144	SLU 76	15	15	5266	19.94	12.01	0.01
144	SLU 77	16	-225	5504	29.69	12.24	0.01
144	SLU 78	16	-82	5425	24.3	12.26	0.01
144	SLU 79	16	-222	5469	29.41	12.14	0.01
144	SLU 80	16	-80	5390	24.02	12.16	0.01
144	SLU 81	16	-225	5556	29.53	12.34	0.01
144	SLU 82	16	-83	5477	24.13	12.36	0.01
144	SLU 83	16	-225	5626	30.01	12.5	0.01
144	SLU 84	16	-82	5547	24.62	12.52	0.01
144	SLE RA 1	10	-165	3581	19.33	7.89	0.01
144	SLE RA 2	10	-7	3493	13.34	7.92	0.01
144	SLE RA 3	10	-167	3652	19.84	8.07	0.01
144	SLE RA 4	10	-72	3599	16.25	8.08	0.01
144	SLE RA 5	10	-7	3540	13.67	8.02	0.01
144	SLE RA 6	11	-166	3698	20.17	8.17	0.01
144	SLE RA 7	10	-71	3646	16.57	8.18	0.01
144	SLE RA 8	10	-165	3675	19.98	8.11	0.01
144	SLE RA 9	10	-70	3622	16.39	8.12	0.01
144	SLE RA 10	11	-11	3847	15.04	8.73	0.01
144	SLE RA 11	11	-170	4006	21.54	8.88	0.01
144	SLE RA 12	11	-75	3953	17.94	8.89	0.01
144	SLE RA 13	11	-10	3894	15.36	8.84	0.01
144	SLE RA 14	12	-170	4053	21.86	8.99	0.01
144	SLE RA 15	12	-75	4000	18.27	9	0.01
144	SLE RA 16	12	-168	4029	21.67	8.92	0.01
144	SLE RA 17	11	-73	3976	18.08	8.93	0.01
144	SLE RA 18	12	-171	4087	21.75	9.06	0.01
144	SLE RA 19	12	-76	4034	18.16	9.07	0.01
144	SLE RA 20	12	-170	4134	22.08	9.17	0.01
144	SLE RA 21	12	-75	4081	18.48	9.18	0.01
144	SLE FR 1	10	-165	3581	19.33	7.89	0.01
144	SLE FR 2	10	-134	3563	18.13	7.9	0.01
144	SLE FR 3	10	-165	3600	19.46	7.94	0.01
144	SLE FR 4	11	-135	3715	18.86	8.25	0.01
144	SLE FR 5	11	-167	3752	20.19	8.29	0.01
144	SLE FR 6	11	-168	3834	20.54	8.48	0.01
144	SLE QP 1	10	-165	3581	19.33	7.89	0.01
144	SLE QP 2	11	-167	3733	20.06	8.24	0.01
144	SLD 1	18	216	3992	19.44	15.36	0.01
144	SLD 2	18	216	3992	19.44	15.36	0.01
144	SLD 3	15	-174	4164	34.34	13.63	0.01
144	SLD 4	15	-174	4164	34.34	13.63	0.01
144	SLD 5	17	540	3550	-2.73	13	0.01
144	SLD 6	17	540	3550	-2.73	13	0.01
144	SLD 7	8	-761	4123	46.95	7.24	0.01
144	SLD 8	8	-761	4123	46.95	7.24	0.01
144	SLD 9	13	428	3343	-6.83	9.25	0.01
144	SLD 10	13	428	3343	-6.83	9.25	0.01
144	SLD 11	5	-874	3915	42.85	3.49	0
144	SLD 12	5	-874	3915	42.85	3.49	0
144	SLD 13	6	-160	3302	5.77	2.86	0
144	SLD 14	6	-160	3302	5.77	2.86	0
144	SLD 15	3	-550	3473	20.68	1.13	0
144	SLD 16	3	-550	3473	20.68	1.13	0
144	SLV 1	28	751	4333	18.22	24.99	0.03
144	SLV 2	28	751	4333	18.22	24.99	0.03
144	SLV 3	22	-193	4759	54.37	20.82	0.02
144	SLV 4	22	-193	4759	54.37	20.82	0.02
144	SLV 5	25	1541	3267	-35.31	19.59	0.02
144	SLV 6	25	1541	3267	-35.31	19.59	0.02
144	SLV 7	5	-1606	4687	85.17	5.69	0.01
144	SLV 8	5	-1606	4687	85.17	5.69	0.01
144	SLV 9	16	1273	2779	-45.05	10.79	0.01
144	SLV 10	16	1273	2779	-45.05	10.79	0.01
144	SLV 11	-4	-1874	4199	75.42	-3.11	0
144	SLV 12	-4	-1874	4199	75.42	-3.11	0

Nodo	Cont.	Reazione a traslazione			Reazione a rotazione		
Ind.	N.br.	x	y	z	x	y	z
144	SLV 13	-1	-141	2707	-14.25	-4.34	-0.01
144	SLV 14	-1	-141	2707	-14.25	-4.34	-0.01
144	SLV 15	-7	-1085	3133	21.89	-8.51	-0.01
144	SLV 16	-7	-1085	3133	21.89	-8.51	-0.01
145	SLU 1	4	-1031	5582	54.73	3.04	-0.02
145	SLU 2	4	-1158	5734	59.38	3.21	-0.02
145	SLU 3	4	-1063	5760	56.78	3.22	-0.02
145	SLU 4	4	-1139	5851	59.58	3.32	-0.02
145	SLU 5	4	-1178	5857	60.76	3.34	-0.02
145	SLU 6	4	-1083	5882	58.16	3.34	-0.02
145	SLU 7	5	-1159	5974	60.95	3.44	-0.02
145	SLU 8	4	-1072	5827	57.48	3.29	-0.02
145	SLU 9	5	-1148	5919	60.27	3.39	-0.02
145	SLU 10	2	-1314	6618	68.31	1.64	-0.01
145	SLU 11	2	-1220	6643	65.71	1.65	-0.02
145	SLU 12	2	-1296	6735	68.5	1.75	-0.02
145	SLU 13	2	-1335	6741	69.68	1.77	-0.02
145	SLU 14	3	-1240	6766	67.09	1.77	-0.02
145	SLU 15	3	-1316	6857	69.88	1.87	-0.02
145	SLU 16	2	-1228	6711	66.4	1.72	-0.02
145	SLU 17	3	-1304	6802	69.2	1.82	-0.02
145	SLU 18	1	-1255	6844	67.48	0.8	-0.01
145	SLU 19	1	-1331	6936	70.27	0.9	-0.01
145	SLU 20	1	-1275	6967	68.85	0.92	-0.01
145	SLU 21	2	-1351	7058	71.65	1.02	-0.01
145	SLU 22	4	-1159	6318	62.54	3.12	-0.02
145	SLU 23	4	-1286	6470	67.2	3.29	-0.02
145	SLU 24	4	-1191	6496	64.6	3.29	-0.02
145	SLU 25	5	-1267	6587	67.39	3.4	-0.02
145	SLU 26	5	-1306	6593	68.57	3.41	-0.02
145	SLU 27	5	-1211	6619	65.97	3.41	-0.02
145	SLU 28	5	-1287	6710	68.77	3.52	-0.02
145	SLU 29	5	-1200	6564	65.29	3.36	-0.02
145	SLU 30	5	-1275	6655	68.08	3.46	-0.02
145	SLU 31	2	-1442	7354	76.12	1.72	-0.02
145	SLU 32	3	-1348	7380	73.53	1.72	-0.02
145	SLU 33	3	-1424	7471	76.32	1.83	-0.02
145	SLU 34	3	-1462	7477	77.5	1.84	-0.02
145	SLU 35	3	-1368	7502	74.9	1.84	-0.02
145	SLU 36	3	-1444	7594	77.69	1.95	-0.02
145	SLU 37	3	-1356	7447	74.22	1.79	-0.02
145	SLU 38	3	-1432	7539	77.01	1.89	-0.02
145	SLU 39	1	-1383	7581	75.29	0.87	-0.01
145	SLU 40	2	-1459	7672	78.09	0.98	-0.01
145	SLU 41	2	-1403	7703	76.67	1	-0.01
145	SLU 42	2	-1479	7795	79.46	1.1	-0.01
145	SLU 43	5	-1297	7004	68.47	3.93	-0.02
145	SLU 44	5	-1423	7156	73.12	4.1	-0.02
145	SLU 45	5	-1329	7182	70.52	4.11	-0.03
145	SLU 46	6	-1405	7273	73.31	4.21	-0.03
145	SLU 47	6	-1443	7279	74.49	4.22	-0.03
145	SLU 48	6	-1349	7304	71.9	4.23	-0.03
145	SLU 49	6	-1425	7396	74.69	4.33	-0.03
145	SLU 50	6	-1337	7249	71.22	4.17	-0.03
145	SLU 51	6	-1413	7341	74.01	4.28	-0.03
145	SLU 52	3	-1580	8040	82.05	2.53	-0.02
145	SLU 53	3	-1486	8065	79.45	2.54	-0.02
145	SLU 54	4	-1561	8157	82.24	2.64	-0.02
145	SLU 55	4	-1600	8163	83.42	2.65	-0.02
145	SLU 56	4	-1506	8188	80.82	2.66	-0.02
145	SLU 57	4	-1582	8280	83.62	2.76	-0.02
145	SLU 58	4	-1494	8133	80.14	2.6	-0.02
145	SLU 59	4	-1570	8225	82.93	2.71	-0.02
145	SLU 60	2	-1521	8267	81.22	1.69	-0.02
145	SLU 61	3	-1597	8358	84.01	1.79	-0.02
145	SLU 62	3	-1541	8389	82.59	1.81	-0.02
145	SLU 63	3	-1617	8481	85.39	1.91	-0.02
145	SLU 64	5	-1425	7740	76.28	4	-0.03
145	SLU 65	6	-1551	7892	80.93	4.18	-0.03
145	SLU 66	6	-1457	7918	78.34	4.18	-0.03
145	SLU 67	6	-1533	8009	81.13	4.28	-0.03
145	SLU 68	6	-1571	8015	82.31	4.3	-0.03
145	SLU 69	6	-1477	8041	79.71	4.3	-0.03
145	SLU 70	6	-1553	8132	82.5	4.41	-0.03
145	SLU 71	6	-1465	7986	79.03	4.25	-0.03
145	SLU 72	6	-1541	8077	81.82	4.35	-0.03
145	SLU 73	4	-1708	8776	89.86	2.61	-0.02
145	SLU 74	4	-1613	8802	87.26	2.61	-0.02
145	SLU 75	4	-1689	8893	90.06	2.71	-0.02
145	SLU 76	4	-1728	8899	91.24	2.73	-0.02
145	SLU 77	4	-1634	8925	88.64	2.73	-0.02
145	SLU 78	4	-1709	9016	91.43	2.83	-0.02
145	SLU 79	4	-1622	8870	87.96	2.68	-0.02
145	SLU 80	4	-1698	8961	90.75	2.78	-0.02
145	SLU 81	3	-1649	9003	89.03	1.76	-0.02
145	SLU 82	3	-1724	9094	91.83	1.86	-0.02
145	SLU 83	3	-1669	9126	90.41	1.88	-0.02
145	SLU 84	3	-1745	9217	93.2	1.99	-0.02
145	SLE RA 1	4	-1068	5792	56.96	3.06	-0.02
145	SLE RA 2	4	-1152	5894	60.06	3.18	-0.02

Nodo	Cont.	Reazione a traslazione			Reazione a rotazione		
Ind.	N.br.	x	y	z	x	y	z
145	SLE RA 3	4	-1089	5911	58.33	3.18	-0.02
145	SLE RA 4	4	-1140	5971	60.19	3.25	-0.02
145	SLE RA 5	4	-1166	5975	60.98	3.26	-0.02
145	SLE RA 6	4	-1103	5992	59.25	3.26	-0.02
145	SLE RA 7	4	-1153	6053	61.11	3.33	-0.02
145	SLE RA 8	4	-1095	5956	58.79	3.23	-0.02
145	SLE RA 9	4	-1145	6017	60.66	3.29	-0.02
145	SLE RA 10	3	-1257	6483	66.01	2.13	-0.02
145	SLE RA 11	3	-1194	6500	64.28	2.13	-0.02
145	SLE RA 12	3	-1244	6561	66.14	2.2	-0.02
145	SLE RA 13	3	-1270	6565	66.93	2.21	-0.02
145	SLE RA 14	3	-1207	6582	65.2	2.22	-0.02
145	SLE RA 15	3	-1258	6643	67.06	2.28	-0.02
145	SLE RA 16	3	-1199	6545	64.74	2.18	-0.02
145	SLE RA 17	3	-1250	6606	66.61	2.25	-0.02
145	SLE RA 18	2	-1217	6634	65.46	1.57	-0.01
145	SLE RA 19	2	-1268	6695	67.32	1.64	-0.01
145	SLE RA 20	2	-1231	6716	66.38	1.65	-0.02
145	SLE RA 21	2	-1281	6777	68.24	1.72	-0.02
145	SLE FR 1	4	-1068	5792	56.96	3.06	-0.02
145	SLE FR 2	4	-1085	5812	57.58	3.09	-0.02
145	SLE FR 3	4	-1073	5825	57.33	3.1	-0.02
145	SLE FR 4	4	-1130	6065	60.13	2.64	-0.02
145	SLE FR 5	4	-1118	6077	59.88	2.65	-0.02
145	SLE FR 6	3	-1143	6213	61.21	2.32	-0.02
145	SLE QP 1	4	-1068	5792	56.96	3.06	-0.02
145	SLE QP 2	4	-1113	6045	59.51	2.61	-0.02
145	SLD 1	18	-717	6394	45.81	18.74	-0.06
145	SLD 2	18	-717	6394	45.81	18.74	-0.06
145	SLD 3	20	-1169	6832	62.62	20.55	-0.07
145	SLD 4	20	-1169	6832	62.62	20.55	-0.07
145	SLD 5	5	-308	5485	29.91	4.69	-0.02
145	SLD 6	5	-308	5485	29.91	4.69	-0.02
145	SLD 7	11	-1816	6945	85.93	10.75	-0.04
145	SLD 8	11	-1816	6945	85.93	10.75	-0.04
145	SLD 9	-4	-410	5144	33.09	-5.52	0.01
145	SLD 10	-4	-410	5144	33.09	-5.52	0.01
145	SLD 11	2	-1917	6604	89.11	0.54	-0.02
145	SLD 12	2	-1917	6604	89.11	0.54	-0.02
145	SLD 13	-12	-1056	5258	56.4	-15.32	0.03
145	SLD 14	-12	-1056	5258	56.4	-15.32	0.03
145	SLD 15	-11	-1509	5696	73.21	-13.51	0.02
145	SLD 16	-11	-1509	5696	73.21	-13.51	0.02
145	SLV 1	36	-180	6858	27.18	40.34	-0.12
145	SLV 2	36	-180	6858	27.18	40.34	-0.12
145	SLV 3	41	-1245	7900	66.8	44.66	-0.13
145	SLV 4	41	-1245	7900	66.8	44.66	-0.13
145	SLV 5	6	782	4707	-10.28	7.38	-0.02
145	SLV 6	6	782	4707	-10.28	7.38	-0.02
145	SLV 7	22	-2768	8183	121.79	21.78	-0.08
145	SLV 8	22	-2768	8183	121.79	21.78	-0.08
145	SLV 9	-15	542	3907	-2.77	-16.55	0.04
145	SLV 10	-15	542	3907	-2.77	-16.55	0.04
145	SLV 11	1	-3008	7382	129.3	-2.15	-0.01
145	SLV 12	1	-3008	7382	129.3	-2.15	-0.01
145	SLV 13	-34	-980	4189	52.23	-39.43	0.1
145	SLV 14	-34	-980	4189	52.23	-39.43	0.1
145	SLV 15	-29	-2045	5232	91.85	-35.11	0.08
145	SLV 16	-29	-2045	5232	91.85	-35.11	0.08
146	SLU 1	-3	-145	4398	-13.45	-1.48	0
146	SLU 2	-3	98	4233	-23.32	-1.67	0
146	SLU 3	-3	-137	4535	-14.75	-1.55	0
146	SLU 4	-3	8	4436	-20.68	-1.66	0
146	SLU 5	-3	107	4319	-24.42	-1.72	0
146	SLU 6	-3	-128	4621	-15.86	-1.6	0
146	SLU 7	-3	17	4522	-21.78	-1.71	0
146	SLU 8	-3	-126	4570	-15.65	-1.58	0
146	SLU 9	-3	19	4471	-21.57	-1.69	0
146	SLU 10	-3	106	4942	-27.18	-1.92	0
146	SLU 11	-3	-129	5244	-18.62	-1.81	0
146	SLU 12	-3	17	5145	-24.54	-1.92	0
146	SLU 13	-3	116	5028	-28.28	-1.97	0
146	SLU 14	-3	-119	5330	-19.72	-1.86	0
146	SLU 15	-3	26	5231	-25.64	-1.97	0
146	SLU 16	-3	-118	5280	-19.51	-1.83	0
146	SLU 17	-3	28	5181	-25.44	-1.95	0
146	SLU 18	-3	-132	5411	-18.97	-1.84	0
146	SLU 19	-3	13	5312	-24.89	-1.96	0
146	SLU 20	-3	-123	5497	-20.07	-1.89	0
146	SLU 21	-3	22	5398	-25.99	-2.01	0
146	SLU 22	-3	-137	5059	-17.28	-1.73	0
146	SLU 23	-3	106	4894	-27.15	-1.92	0
146	SLU 24	-3	-129	5195	-18.58	-1.8	0
146	SLU 25	-3	16	5096	-24.51	-1.91	0
146	SLU 26	-3	115	4980	-28.25	-1.97	0
146	SLU 27	-3	-120	5282	-19.68	-1.85	0
146	SLU 28	-3	25	5183	-25.61	-1.96	0
146	SLU 29	-3	-118	5231	-19.48	-1.83	0
146	SLU 30	-3	27	5132	-25.4	-1.94	0
146	SLU 31	-3	114	5603	-31.01	-2.17	0

Nodo	Cont.	Reazione a traslazione			Reazione a rotazione		
Ind.	N.br.	x	y	z	x	y	z
146	SLU 32	-4	-121	5905	-22.45	-2.05	0
146	SLU 33	-4	25	5806	-28.37	-2.17	0
146	SLU 34	-4	124	5689	-32.11	-2.22	0
146	SLU 35	-4	-111	5991	-23.55	-2.1	0.01
146	SLU 36	-4	34	5892	-29.47	-2.22	0
146	SLU 37	-4	-110	5940	-23.34	-2.08	0.01
146	SLU 38	-4	36	5841	-29.27	-2.2	0
146	SLU 39	-4	-124	6072	-22.8	-2.09	0.01
146	SLU 40	-4	21	5973	-28.72	-2.21	0
146	SLU 41	-4	-115	6158	-23.9	-2.14	0.01
146	SLU 42	-4	30	6059	-29.82	-2.26	0
146	SLU 43	-3	-191	5490	-16.17	-1.84	0
146	SLU 44	-3	52	5326	-26.04	-2.03	0
146	SLU 45	-3	-183	5627	-17.47	-1.91	0
146	SLU 46	-3	-38	5528	-23.4	-2.02	0
146	SLU 47	-3	61	5412	-27.14	-2.08	0
146	SLU 48	-4	-174	5714	-18.58	-1.96	0
146	SLU 49	-3	-29	5615	-24.5	-2.07	0
146	SLU 50	-3	-172	5663	-18.37	-1.94	0
146	SLU 51	-3	-27	5564	-24.29	-2.05	0
146	SLU 52	-4	60	6035	-29.9	-2.28	0
146	SLU 53	-4	-175	6337	-21.34	-2.16	0.01
146	SLU 54	-4	-29	6238	-27.26	-2.28	0.01
146	SLU 55	-4	69	6121	-31	-2.33	0
146	SLU 56	-4	-166	6423	-22.44	-2.21	0.01
146	SLU 57	-4	-20	6324	-28.36	-2.33	0.01
146	SLU 58	-4	-164	6372	-22.23	-2.19	0.01
146	SLU 59	-4	-18	6273	-28.16	-2.31	0.01
146	SLU 60	-4	-178	6504	-21.69	-2.2	0.01
146	SLU 61	-4	-33	6405	-27.61	-2.32	0.01
146	SLU 62	-4	-169	6590	-22.79	-2.25	0.01
146	SLU 63	-4	-24	6491	-28.71	-2.37	0.01
146	SLU 64	-4	-183	6151	-20	-2.09	0.01
146	SLU 65	-4	60	5986	-29.87	-2.28	0
146	SLU 66	-4	-175	6288	-21.3	-2.16	0.01
146	SLU 67	-4	-30	6189	-27.23	-2.27	0.01
146	SLU 68	-4	69	6073	-30.97	-2.33	0
146	SLU 69	-4	-166	6374	-22.41	-2.21	0.01
146	SLU 70	-4	-21	6275	-28.33	-2.32	0.01
146	SLU 71	-4	-164	6324	-22.2	-2.19	0.01
146	SLU 72	-4	-19	6225	-28.12	-2.3	0.01
146	SLU 73	-4	68	6696	-33.73	-2.53	0.01
146	SLU 74	-4	-167	6998	-25.17	-2.41	0.01
146	SLU 75	-4	-21	6899	-31.09	-2.53	0.01
146	SLU 76	-4	77	6782	-34.83	-2.58	0.01
146	SLU 77	-4	-158	7084	-26.27	-2.46	0.01
146	SLU 78	-4	-12	6985	-32.19	-2.58	0.01
146	SLU 79	-4	-156	7033	-26.06	-2.44	0.01
146	SLU 80	-4	-10	6934	-31.99	-2.56	0.01
146	SLU 81	-4	-170	7165	-25.52	-2.45	0.01
146	SLU 82	-4	-25	7066	-31.44	-2.57	0.01
146	SLU 83	-4	-161	7251	-26.62	-2.5	0.01
146	SLU 84	-4	-16	7152	-32.54	-2.62	0.01
146	SLE RA 1	-3	-142	4587	-14.54	-1.55	0
146	SLE RA 2	-3	19	4477	-21.12	-1.68	0
146	SLE RA 3	-3	-137	4678	-15.41	-1.6	0
146	SLE RA 4	-3	-41	4612	-19.36	-1.67	0
146	SLE RA 5	-3	25	4534	-21.86	-1.71	0
146	SLE RA 6	-3	-131	4735	-16.15	-1.63	0
146	SLE RA 7	-3	-34	4669	-20.09	-1.71	0
146	SLE RA 8	-3	-130	4702	-16.01	-1.62	0
146	SLE RA 9	-3	-33	4636	-19.96	-1.69	0
146	SLE RA 10	-3	25	4949	-23.7	-1.85	0
146	SLE RA 11	-3	-132	5151	-17.99	-1.77	0
146	SLE RA 12	-3	-35	5085	-21.94	-1.84	0
146	SLE RA 13	-3	31	5007	-24.43	-1.88	0
146	SLE RA 14	-3	-126	5208	-18.72	-1.8	0
146	SLE RA 15	-3	-29	5142	-22.67	-1.88	0
146	SLE RA 16	-3	-124	5174	-18.59	-1.79	0
146	SLE RA 17	-3	-27	5108	-22.53	-1.86	0
146	SLE RA 18	-3	-134	5262	-18.22	-1.79	0
146	SLE RA 19	-3	-37	5196	-22.17	-1.87	0
146	SLE RA 20	-3	-128	5320	-18.95	-1.83	0
146	SLE RA 21	-3	-31	5254	-22.9	-1.9	0
146	SLE FR 1	-3	-142	4587	-14.54	-1.55	0
146	SLE FR 2	-3	-110	4565	-15.86	-1.58	0
146	SLE FR 3	-3	-140	4610	-14.83	-1.56	0
146	SLE FR 4	-3	-108	4767	-16.96	-1.65	0
146	SLE FR 5	-3	-137	4812	-15.94	-1.64	0
146	SLE FR 6	-3	-138	4924	-16.38	-1.67	0
146	SLE QP 1	-3	-142	4587	-14.54	-1.55	0
146	SLE QP 2	-3	-140	4789	-15.64	-1.62	0
146	SLD 1	-8	-138	4544	-15.67	2.31	0.01
146	SLD 2	-8	-138	4544	-15.67	2.31	0.01
146	SLD 3	-6	-518	4363	-0.19	3.59	0.01
146	SLD 4	-6	-518	4363	-0.19	3.59	0.01
146	SLD 5	-7	437	4989	-39.12	-2.39	0.01
146	SLD 6	-7	437	4989	-39.12	-2.39	0.01
146	SLD 7	-1	-830	4388	12.46	1.89	0
146	SLD 8	-1	-830	4388	12.46	1.89	0

Nodo	Cont.	Reazione a traslazione			Reazione a rotazione		
Ind.	N.br.	x	y	z	x	y	z
146	SLD 9	-5	550	5191	-43.75	-5.14	0.01
146	SLD 10	-5	550	5191	-43.75	-5.14	0.01
146	SLD 11	2	-717	4589	7.84	-0.86	0
146	SLD 12	2	-717	4589	7.84	-0.86	0
146	SLD 13	0	239	5215	-31.1	-6.84	0
146	SLD 14	0	239	5215	-31.1	-6.84	0
146	SLD 15	2	-142	5035	-15.62	-5.56	0
146	SLD 16	2	-142	5035	-15.62	-5.56	0
146	SLV 1	-15	-131	4228	-15.81	7.8	0.02
146	SLV 2	-15	-131	4228	-15.81	7.8	0.02
146	SLV 3	-10	-1044	3774	21.19	10.95	0.01
146	SLV 4	-10	-1044	3774	21.19	10.95	0.01
146	SLV 5	-13	1247	5310	-71.82	-3.57	0.02
146	SLV 6	-13	1247	5310	-71.82	-3.57	0.02
146	SLV 7	2	-1795	3796	51.53	6.93	0
146	SLV 8	2	-1795	3796	51.53	6.93	0
146	SLV 9	-8	1515	5783	-82.82	-10.17	0.01
146	SLV 10	-8	1515	5783	-82.82	-10.17	0.01
146	SLV 11	8	-1527	4269	40.53	0.32	-0.01
146	SLV 12	8	-1527	4269	40.53	0.32	-0.01
146	SLV 13	4	764	5805	-52.48	-14.2	0
146	SLV 14	4	764	5805	-52.48	-14.2	0
146	SLV 15	9	-149	5351	-15.47	-11.05	-0.01
146	SLV 16	9	-149	5351	-15.47	-11.05	-0.01
147	SLU 1	0	272	6402	-15.1	0.09	0
147	SLU 2	0	345	6368	-18.68	1.75	0
147	SLU 3	0	283	6583	-15.61	0.09	0
147	SLU 4	0	327	6563	-17.76	1.08	0
147	SLU 5	0	352	6478	-18.97	1.74	0
147	SLU 6	0	290	6693	-15.9	0.08	0
147	SLU 7	0	334	6672	-18.05	1.08	0
147	SLU 8	0	286	6621	-15.67	0.07	0
147	SLU 9	0	330	6601	-17.82	1.07	0
147	SLU 10	1	405	7200	-21.76	1.82	0
147	SLU 11	0	343	7415	-18.68	0.16	0
147	SLU 12	0	387	7395	-20.83	1.16	0
147	SLU 13	1	412	7310	-22.04	1.81	0
147	SLU 14	0	350	7524	-18.97	0.16	0
147	SLU 15	0	394	7504	-21.12	1.15	0
147	SLU 16	0	346	7453	-18.74	0.15	0
147	SLU 17	0	390	7432	-20.89	1.15	0
147	SLU 18	0	358	7590	-19.48	0.19	0
147	SLU 19	1	402	7570	-21.64	1.19	0
147	SLU 20	0	365	7700	-19.77	0.19	0
147	SLU 21	1	409	7679	-21.92	1.18	0
147	SLU 22	0	327	7195	-17.88	0.15	0
147	SLU 23	1	400	7161	-21.47	1.81	0
147	SLU 24	0	338	7376	-18.4	0.15	0
147	SLU 25	0	382	7356	-20.55	1.14	0
147	SLU 26	1	407	7271	-21.76	1.8	0
147	SLU 27	0	345	7486	-18.68	0.14	0
147	SLU 28	0	389	7465	-20.84	1.14	0
147	SLU 29	0	341	7414	-18.46	0.14	0
147	SLU 30	0	385	7394	-20.61	1.13	0
147	SLU 31	1	460	7993	-24.54	1.88	0
147	SLU 32	0	398	8208	-21.47	0.22	0
147	SLU 33	1	442	8187	-23.62	1.22	0
147	SLU 34	1	467	8102	-24.83	1.88	0
147	SLU 35	0	405	8317	-21.75	0.22	0
147	SLU 36	1	449	8297	-23.91	1.21	0
147	SLU 37	0	401	8246	-21.53	0.21	0
147	SLU 38	1	445	8225	-23.68	1.21	0
147	SLU 39	0	413	8383	-22.27	0.25	0
147	SLU 40	1	457	8363	-24.42	1.25	0
147	SLU 41	0	420	8492	-22.56	0.25	0
147	SLU 42	1	464	8472	-24.71	1.24	0
147	SLU 43	0	335	8051	-18.67	0.09	0
147	SLU 44	0	408	8017	-22.26	1.75	0
147	SLU 45	0	346	8232	-19.18	0.09	0
147	SLU 46	0	390	8212	-21.34	1.09	0
147	SLU 47	0	415	8127	-22.54	1.74	0
147	SLU 48	0	353	8342	-19.47	0.09	0
147	SLU 49	0	397	8321	-21.62	1.08	0
147	SLU 50	0	349	8270	-19.24	0.08	0
147	SLU 51	0	392	8250	-21.39	1.08	0
147	SLU 52	1	468	8849	-25.33	1.83	0
147	SLU 53	0	406	9064	-22.25	0.17	0
147	SLU 54	0	450	9043	-24.41	1.16	0
147	SLU 55	1	475	8958	-25.62	1.82	0.01
147	SLU 56	0	413	9173	-22.54	0.16	0
147	SLU 57	0	457	9153	-24.69	1.16	0
147	SLU 58	0	409	9101	-22.31	0.15	0
147	SLU 59	0	452	9081	-24.47	1.15	0
147	SLU 60	0	421	9239	-23.06	0.2	0
147	SLU 61	1	464	9219	-25.21	1.19	0
147	SLU 62	0	428	9348	-23.34	0.19	0
147	SLU 63	1	471	9328	-25.5	1.19	0
147	SLU 64	0	390	8844	-21.46	0.15	0
147	SLU 65	1	463	8810	-25.04	1.81	0.01
147	SLU 66	0	401	9025	-21.97	0.15	0

Nodo	Cont.	Reazione a traslazione			Reazione a rotazione		
Ind.	N.br.	x	y	z	x	y	z
147	SLU 67	0	445	9005	-24.12	1.15	0
147	SLU 68	1	470	8920	-25.33	1.81	0.01
147	SLU 69	0	408	9134	-22.26	0.15	0
147	SLU 70	0	452	9114	-24.41	1.14	0
147	SLU 71	0	404	9063	-22.03	0.14	0
147	SLU 72	0	447	9043	-24.18	1.14	0
147	SLU 73	1	523	9642	-28.12	1.89	0.01
147	SLU 74	0	461	9856	-25.04	0.23	0
147	SLU 75	1	505	9836	-27.19	1.22	0
147	SLU 76	1	530	9751	-28.4	1.88	0.01
147	SLU 77	0	468	9966	-25.33	0.22	0
147	SLU 78	1	512	9946	-27.48	1.22	0.01
147	SLU 79	0	464	9894	-25.1	0.22	0
147	SLU 80	1	507	9874	-27.25	1.21	0.01
147	SLU 81	0	476	10032	-25.84	0.26	0
147	SLU 82	1	519	10012	-28	1.25	0
147	SLU 83	0	483	10141	-26.13	0.25	0
147	SLU 84	1	526	10121	-28.28	1.25	0.01
147	SLE RA 1	0	288	6629	-15.89	0.1	0
147	SLE RA 2	0	336	6606	-18.28	1.21	0
147	SLE RA 3	0	295	6749	-16.24	0.1	0
147	SLE RA 4	0	324	6736	-17.67	0.77	0
147	SLE RA 5	0	341	6679	-18.48	1.21	0
147	SLE RA 6	0	300	6822	-16.43	0.1	0
147	SLE RA 7	0	329	6809	-17.86	0.76	0
147	SLE RA 8	0	297	6775	-16.27	0.1	0
147	SLE RA 9	0	326	6761	-17.71	0.76	0
147	SLE RA 10	0	376	7161	-20.33	1.26	0
147	SLE RA 11	0	335	7304	-18.28	0.15	0
147	SLE RA 12	0	364	7290	-19.72	0.82	0
147	SLE RA 13	0	381	7234	-20.52	1.26	0
147	SLE RA 14	0	340	7377	-18.47	0.15	0
147	SLE RA 15	0	369	7363	-19.91	0.81	0
147	SLE RA 16	0	337	7329	-18.32	0.15	0
147	SLE RA 17	0	366	7316	-19.76	0.81	0
147	SLE RA 18	0	345	7421	-18.82	0.17	0
147	SLE RA 19	0	374	7407	-20.25	0.84	0
147	SLE RA 20	0	350	7494	-19.01	0.17	0
147	SLE RA 21	0	379	7480	-20.44	0.83	0
147	SLE FR 1	0	288	6629	-15.89	0.1	0
147	SLE FR 2	0	298	6624	-16.37	0.32	0
147	SLE FR 3	0	290	6658	-15.97	0.1	0
147	SLE FR 4	0	315	6862	-17.25	0.35	0
147	SLE FR 5	0	307	6896	-16.85	0.12	0
147	SLE FR 6	0	317	7025	-17.36	0.14	0
147	SLE QP 1	0	288	6629	-15.89	0.1	0
147	SLE QP 2	0	305	6866	-16.77	0.12	0
147	SLD 1	-11	369	5400	-19.99	7.09	0.02
147	SLD 2	-11	369	5400	-19.99	7.09	0.02
147	SLD 3	-3	-13	5082	-1.29	12.34	0.01
147	SLD 4	-3	-13	5082	-1.29	12.34	0.01
147	SLD 5	-15	905	6909	-46.1	-5.74	0.01
147	SLD 6	-15	905	6909	-46.1	-5.74	0.01
147	SLD 7	11	-370	5848	16.23	11.75	0
147	SLD 8	11	-370	5848	16.23	11.75	0
147	SLD 9	-11	981	7885	-49.77	-11.5	0.01
147	SLD 10	-11	981	7885	-49.77	-11.5	0.01
147	SLD 11	16	-294	6823	12.56	5.99	-0.01
147	SLD 12	16	-294	6823	12.56	5.99	-0.01
147	SLD 13	4	623	8651	-32.25	-12.09	-0.01
147	SLD 14	4	623	8651	-32.25	-12.09	-0.01
147	SLD 15	12	241	8332	-13.55	-6.84	-0.01
147	SLD 16	12	241	8332	-13.55	-6.84	-0.01
147	SLV 1	-27	454	3441	-24.24	16.33	0.04
147	SLV 2	-27	454	3441	-24.24	16.33	0.04
147	SLV 3	-7	-440	2684	19.47	29.56	0.03
147	SLV 4	-7	-440	2684	19.47	29.56	0.03
147	SLV 5	-38	1705	6987	-85.3	-15.08	0.03
147	SLV 6	-38	1705	6987	-85.3	-15.08	0.03
147	SLV 7	28	-1274	4463	60.4	29.02	0
147	SLV 8	28	-1274	4463	60.4	29.02	0
147	SLV 9	-28	1884	9269	-93.94	-28.77	0.01
147	SLV 10	-28	1884	9269	-93.94	-28.77	0.01
147	SLV 11	39	-1095	6746	51.76	15.33	-0.02
147	SLV 12	39	-1095	6746	51.76	15.33	-0.02
147	SLV 13	8	1050	11049	-53.01	-29.31	-0.02
147	SLV 14	8	1050	11049	-53.01	-29.31	-0.02
147	SLV 15	28	156	10292	-9.3	-16.08	-0.04
147	SLV 16	28	156	10292	-9.3	-16.08	-0.04
148	SLU 1	0	291	1357	-8.22	0.51	0.01
148	SLU 2	0	292	1362	-8.22	0.52	0.01
148	SLU 3	0	303	1391	-8.56	0.54	0.01
148	SLU 4	0	304	1394	-8.56	0.54	0.01
148	SLU 5	0	300	1385	-8.46	0.54	0.01
148	SLU 6	0	311	1415	-8.79	0.56	0.01
148	SLU 7	0	312	1418	-8.8	0.56	0.01
148	SLU 8	0	308	1404	-8.69	0.56	0.01
148	SLU 9	0	308	1407	-8.69	0.56	0.01
148	SLU 10	0	360	1534	-10.36	0.56	0.01
148	SLU 11	0	371	1563	-10.69	0.58	0.01

Nodo	Cont.	Reazione a traslazione			Reazione a rotazione		
Ind.	N.br.	x	y	z	x	y	z
148	SLU 12	0	372	1566	-10.69	0.58	0.01
148	SLU 13	0	368	1557	-10.59	0.58	0.01
148	SLU 14	0	379	1587	-10.92	0.6	0.01
148	SLU 15	0	380	1590	-10.93	0.61	0.01
148	SLU 16	0	375	1576	-10.82	0.6	0.01
148	SLU 17	0	376	1579	-10.82	0.6	0.01
148	SLU 18	0	388	1603	-11.26	0.57	0.01
148	SLU 19	0	389	1606	-11.27	0.58	0.01
148	SLU 20	1	397	1626	-11.5	0.59	0.01
148	SLU 21	0	397	1629	-11.5	0.6	0.01
148	SLU 22	0	346	1510	-9.85	0.58	0.01
148	SLU 23	0	347	1515	-9.86	0.58	0.01
148	SLU 24	0	358	1544	-10.19	0.6	0.01
148	SLU 25	0	358	1547	-10.2	0.61	0.01
148	SLU 26	0	355	1538	-10.09	0.61	0.01
148	SLU 27	0	366	1568	-10.43	0.63	0.01
148	SLU 28	0	366	1571	-10.43	0.63	0.01
148	SLU 29	0	362	1557	-10.32	0.62	0.01
148	SLU 30	0	363	1560	-10.32	0.63	0.01
148	SLU 31	0	415	1687	-11.99	0.63	0.02
148	SLU 32	1	426	1716	-12.32	0.64	0.01
148	SLU 33	1	426	1719	-12.33	0.65	0.02
148	SLU 34	1	423	1710	-12.22	0.65	0.02
148	SLU 35	1	434	1740	-12.56	0.67	0.01
148	SLU 36	1	434	1743	-12.56	0.67	0.01
148	SLU 37	1	430	1729	-12.45	0.66	0.01
148	SLU 38	1	431	1732	-12.45	0.67	0.01
148	SLU 39	1	443	1756	-12.9	0.64	0.02
148	SLU 40	1	444	1759	-12.9	0.64	0.02
148	SLU 41	1	451	1779	-13.13	0.66	0.01
148	SLU 42	1	452	1782	-13.13	0.67	0.02
148	SLU 43	0	360	1712	-10.12	0.64	0.02
148	SLU 44	0	361	1716	-10.13	0.65	0.02
148	SLU 45	0	372	1746	-10.47	0.67	0.02
148	SLU 46	0	372	1749	-10.47	0.67	0.02
148	SLU 47	0	369	1740	-10.36	0.67	0.02
148	SLU 48	0	380	1770	-10.7	0.69	0.02
148	SLU 49	0	380	1773	-10.7	0.7	0.02
148	SLU 50	0	376	1759	-10.59	0.69	0.02
148	SLU 51	0	377	1762	-10.6	0.69	0.02
148	SLU 52	1	429	1888	-12.26	0.69	0.02
148	SLU 53	1	440	1918	-12.6	0.71	0.02
148	SLU 54	1	440	1921	-12.6	0.72	0.02
148	SLU 55	1	437	1912	-12.5	0.72	0.02
148	SLU 56	1	448	1942	-12.83	0.73	0.02
148	SLU 57	1	448	1945	-12.83	0.74	0.02
148	SLU 58	1	444	1931	-12.72	0.73	0.02
148	SLU 59	1	445	1934	-12.73	0.74	0.02
148	SLU 60	1	457	1957	-13.17	0.7	0.02
148	SLU 61	1	458	1960	-13.17	0.71	0.02
148	SLU 62	1	465	1981	-13.4	0.73	0.02
148	SLU 63	1	466	1984	-13.41	0.73	0.02
148	SLU 64	0	415	1865	-11.76	0.71	0.02
148	SLU 65	0	416	1869	-11.76	0.72	0.02
148	SLU 66	1	427	1899	-12.1	0.73	0.02
148	SLU 67	1	427	1902	-12.1	0.74	0.02
148	SLU 68	1	424	1893	-12	0.74	0.02
148	SLU 69	1	435	1923	-12.33	0.76	0.02
148	SLU 70	1	435	1926	-12.34	0.76	0.02
148	SLU 71	1	431	1912	-12.23	0.75	0.02
148	SLU 72	1	431	1915	-12.23	0.76	0.02
148	SLU 73	1	484	2041	-13.89	0.76	0.02
148	SLU 74	1	494	2071	-14.23	0.78	0.02
148	SLU 75	1	495	2074	-14.23	0.78	0.02
148	SLU 76	1	492	2065	-14.13	0.78	0.02
148	SLU 77	1	502	2095	-14.46	0.8	0.02
148	SLU 78	1	503	2098	-14.47	0.8	0.02
148	SLU 79	1	499	2084	-14.36	0.8	0.02
148	SLU 80	1	499	2087	-14.36	0.8	0.02
148	SLU 81	1	512	2110	-14.8	0.77	0.02
148	SLU 82	1	512	2113	-14.8	0.77	0.02
148	SLU 83	1	520	2134	-15.04	0.79	0.02
148	SLU 84	1	520	2137	-15.04	0.8	0.02
148	SLE RA 1	0	307	1401	-8.69	0.53	0.01
148	SLE RA 2	0	308	1404	-8.69	0.53	0.01
148	SLE RA 3	0	315	1424	-8.91	0.55	0.01
148	SLE RA 4	0	315	1426	-8.91	0.55	0.01
148	SLE RA 5	0	313	1420	-8.85	0.55	0.01
148	SLE RA 6	0	320	1439	-9.07	0.56	0.01
148	SLE RA 7	0	321	1441	-9.07	0.57	0.01
148	SLE RA 8	0	318	1432	-9	0.56	0.01
148	SLE RA 9	0	318	1434	-9	0.56	0.01
148	SLE RA 10	0	353	1519	-10.11	0.56	0.01
148	SLE RA 11	0	360	1538	-10.33	0.58	0.01
148	SLE RA 12	0	360	1540	-10.34	0.58	0.01
148	SLE RA 13	0	358	1534	-10.27	0.58	0.01
148	SLE RA 14	0	366	1554	-10.49	0.59	0.01
148	SLE RA 15	0	366	1556	-10.49	0.59	0.01
148	SLE RA 16	0	363	1547	-10.42	0.59	0.01
148	SLE RA 17	0	363	1549	-10.42	0.59	0.01

Nodo	Cont.	Reazione a traslazione			Reazione a rotazione		
Ind.	N.br.	x	y	z	x	y	z
148	SLE RA 18	0	372	1565	-10.71	0.57	0.01
148	SLE RA 19	0	372	1566	-10.72	0.57	0.01
148	SLE RA 20	0	377	1580	-10.87	0.59	0.01
148	SLE RA 21	0	377	1582	-10.87	0.59	0.01
148	SLE FR 1	0	307	1401	-8.69	0.53	0.01
148	SLE FR 2	0	307	1401	-8.69	0.53	0.01
148	SLE FR 3	0	309	1407	-8.75	0.54	0.01
148	SLE FR 4	0	327	1451	-9.3	0.54	0.01
148	SLE FR 5	0	329	1456	-9.36	0.55	0.01
148	SLE FR 6	0	339	1483	-9.7	0.55	0.01
148	SLE QP 1	0	307	1401	-8.69	0.53	0.01
148	SLE QP 2	0	326	1450	-9.29	0.54	0.01
148	SLD 1	7	382	1461	-11.74	6.49	0.13
148	SLD 2	7	382	1461	-11.74	6.49	0.13
148	SLD 3	6	293	1508	-7.67	5.84	0.15
148	SLD 4	6	293	1508	-7.67	5.84	0.15
148	SLD 5	4	479	1383	-16.21	3.31	0.03
148	SLD 6	4	479	1383	-16.21	3.31	0.03
148	SLD 7	1	181	1537	-2.63	1.15	0.08
148	SLD 8	1	181	1537	-2.63	1.15	0.08
148	SLD 9	0	472	1362	-15.96	-0.06	-0.05
148	SLD 10	0	472	1362	-15.96	-0.06	-0.05
148	SLD 11	-3	174	1517	-2.38	-2.23	0
148	SLD 12	-3	174	1517	-2.38	-2.23	0
148	SLD 13	-5	360	1392	-10.92	-4.76	-0.12
148	SLD 14	-5	360	1392	-10.92	-4.76	-0.12
148	SLD 15	-6	271	1439	-6.85	-5.41	-0.11
148	SLD 16	-6	271	1439	-6.85	-5.41	-0.11
148	SLV 1	15	457	1474	-15.03	14.48	0.3
148	SLV 2	15	457	1474	-15.03	14.48	0.3
148	SLV 3	13	248	1587	-5.48	12.95	0.33
148	SLV 4	13	248	1587	-5.48	12.95	0.33
148	SLV 5	8	683	1286	-25.49	7.04	0.05
148	SLV 6	8	683	1286	-25.49	7.04	0.05
148	SLV 7	1	-14	1662	6.32	1.95	0.16
148	SLV 8	1	-14	1662	6.32	1.95	0.16
148	SLV 9	0	667	1238	-24.91	-0.87	-0.13
148	SLV 10	0	667	1238	-24.91	-0.87	-0.13
148	SLV 11	-7	-30	1613	6.9	-5.95	-0.02
148	SLV 12	-7	-30	1613	6.9	-5.95	-0.02
148	SLV 13	-12	405	1313	-13.1	-11.87	-0.3
148	SLV 14	-12	405	1313	-13.1	-11.87	-0.3
148	SLV 15	-14	196	1425	-3.56	-13.39	-0.27
148	SLV 16	-14	196	1425	-3.56	-13.39	-0.27
149	SLU 1	8	-281	5889	15.01	7.52	0.18
149	SLU 2	8	-401	6006	19.9	7.84	0.18
149	SLU 3	8	-287	6071	15.39	7.68	0.18
149	SLU 4	8	-359	6141	18.33	7.87	0.18
149	SLU 5	8	-406	6124	20.18	7.94	0.18
149	SLU 6	8	-292	6188	15.67	7.79	0.19
149	SLU 7	8	-363	6258	18.6	7.97	0.19
149	SLU 8	8	-290	6124	15.57	7.73	0.19
149	SLU 9	8	-362	6194	18.5	7.92	0.19
149	SLU 10	12	-427	6956	21.73	11.08	0.23
149	SLU 11	12	-313	7020	17.22	10.93	0.23
149	SLU 12	12	-385	7090	20.15	11.11	0.23
149	SLU 13	12	-431	7073	22	11.18	0.23
149	SLU 14	12	-317	7137	17.5	11.03	0.23
149	SLU 15	12	-389	7208	20.43	11.22	0.24
149	SLU 16	12	-316	7074	17.39	10.98	0.23
149	SLU 17	12	-388	7144	20.33	11.16	0.23
149	SLU 18	13	-318	7246	17.62	12.16	0.25
149	SLU 19	13	-390	7316	20.55	12.35	0.25
149	SLU 20	13	-323	7363	17.9	12.26	0.25
149	SLU 21	13	-394	7433	20.83	12.45	0.25
149	SLU 22	9	-294	6721	16.27	8.87	0.21
149	SLU 23	9	-414	6838	21.16	9.18	0.21
149	SLU 24	9	-300	6902	16.65	9.02	0.21
149	SLU 25	9	-372	6973	19.59	9.21	0.21
149	SLU 26	9	-418	6956	21.44	9.28	0.21
149	SLU 27	9	-304	7020	16.93	9.13	0.22
149	SLU 28	9	-376	7090	19.87	9.31	0.22
149	SLU 29	9	-303	6956	16.83	9.07	0.21
149	SLU 30	9	-375	7026	19.76	9.26	0.22
149	SLU 31	13	-440	7788	22.99	12.42	0.26
149	SLU 32	13	-326	7852	18.48	12.27	0.26
149	SLU 33	13	-397	7922	21.41	12.46	0.26
149	SLU 34	13	-444	7905	23.26	12.53	0.26
149	SLU 35	13	-330	7969	18.76	12.37	0.26
149	SLU 36	13	-402	8040	21.69	12.56	0.27
149	SLU 37	13	-329	7905	18.65	12.32	0.26
149	SLU 38	13	-401	7976	21.59	12.51	0.26
149	SLU 39	15	-331	8077	18.88	13.5	0.27
149	SLU 40	15	-403	8148	21.81	13.69	0.28
149	SLU 41	15	-335	8195	19.16	13.61	0.28
149	SLU 42	15	-407	8265	22.09	13.79	0.28
149	SLU 43	9	-361	7371	19.08	9.32	0.22
149	SLU 44	10	-481	7488	23.97	9.63	0.22
149	SLU 45	9	-367	7552	19.46	9.48	0.23
149	SLU 46	10	-439	7622	22.4	9.67	0.23

Nodo	Cont.	Reazione a traslazione			Reazione a rotazione		
Ind.	N.br.	x	y	z	x	y	z
149	SLU 47	10	-486	7605	24.25	9.74	0.23
149	SLU 48	9	-372	7670	19.74	9.58	0.23
149	SLU 49	10	-443	7740	22.68	9.77	0.23
149	SLU 50	9	-370	7606	19.64	9.53	0.23
149	SLU 51	10	-442	7676	22.57	9.71	0.23
149	SLU 52	14	-507	8437	25.8	12.88	0.27
149	SLU 53	13	-393	8502	21.29	12.72	0.27
149	SLU 54	14	-465	8572	24.22	12.91	0.28
149	SLU 55	14	-511	8555	26.07	12.98	0.28
149	SLU 56	13	-397	8619	21.57	12.83	0.28
149	SLU 57	14	-469	8689	24.5	13.01	0.28
149	SLU 58	13	-396	8555	21.46	12.77	0.28
149	SLU 59	14	-468	8625	24.4	12.96	0.28
149	SLU 60	15	-398	8727	21.69	13.96	0.29
149	SLU 61	15	-470	8797	24.62	14.14	0.29
149	SLU 62	15	-403	8845	21.97	14.06	0.29
149	SLU 63	15	-475	8915	24.9	14.25	0.29
149	SLU 64	11	-374	8203	20.34	10.66	0.25
149	SLU 65	11	-494	8320	25.23	10.97	0.25
149	SLU 66	11	-380	8384	20.72	10.82	0.26
149	SLU 67	11	-452	8454	23.66	11.01	0.26
149	SLU 68	11	-498	8437	25.51	11.08	0.26
149	SLU 69	11	-384	8501	21	10.92	0.26
149	SLU 70	11	-456	8572	23.94	11.11	0.26
149	SLU 71	11	-383	8438	20.9	10.87	0.26
149	SLU 72	11	-455	8508	23.83	11.06	0.26
149	SLU 73	15	-520	9269	27.06	14.22	0.3
149	SLU 74	15	-406	9333	22.55	14.07	0.3
149	SLU 75	15	-477	9404	25.48	14.25	0.3
149	SLU 76	15	-524	9387	27.34	14.32	0.3
149	SLU 77	15	-410	9451	22.83	14.17	0.31
149	SLU 78	15	-482	9521	25.76	14.36	0.31
149	SLU 79	15	-409	9387	22.72	14.12	0.31
149	SLU 80	15	-481	9457	25.66	14.3	0.31
149	SLU 81	16	-411	9559	22.95	15.3	0.32
149	SLU 82	17	-483	9629	25.88	15.49	0.32
149	SLU 83	16	-415	9676	23.23	15.4	0.32
149	SLU 84	17	-487	9747	26.16	15.59	0.32
149	SLE RA 1	8	-285	6127	15.37	7.91	0.19
149	SLE RA 2	8	-365	6205	18.63	8.12	0.19
149	SLE RA 3	8	-289	6248	15.63	8.01	0.19
149	SLE RA 4	8	-337	6295	17.58	8.14	0.19
149	SLE RA 5	8	-368	6283	18.82	8.18	0.19
149	SLE RA 6	8	-292	6326	15.81	8.08	0.19
149	SLE RA 7	8	-340	6373	17.77	8.21	0.19
149	SLE RA 8	8	-291	6284	15.74	8.04	0.19
149	SLE RA 9	8	-339	6330	17.7	8.17	0.19
149	SLE RA 10	11	-382	6838	19.85	10.28	0.22
149	SLE RA 11	11	-306	6881	16.84	10.18	0.22
149	SLE RA 12	11	-354	6928	18.8	10.3	0.22
149	SLE RA 13	11	-385	6916	20.03	10.35	0.22
149	SLE RA 14	11	-309	6959	17.03	10.25	0.22
149	SLE RA 15	11	-357	7006	18.98	10.37	0.22
149	SLE RA 16	11	-308	6916	16.96	10.21	0.22
149	SLE RA 17	11	-356	6963	18.91	10.33	0.22
149	SLE RA 18	12	-310	7031	17.11	11	0.23
149	SLE RA 19	12	-357	7078	19.07	11.12	0.23
149	SLE RA 20	12	-313	7109	17.29	11.07	0.23
149	SLE RA 21	12	-360	7156	19.25	11.19	0.23
149	SLE FR 1	8	-285	6127	15.37	7.91	0.19
149	SLE FR 2	8	-301	6143	16.02	7.95	0.19
149	SLE FR 3	8	-286	6158	15.44	7.94	0.19
149	SLE FR 4	9	-308	6414	16.54	8.88	0.2
149	SLE FR 5	9	-294	6430	15.97	8.86	0.2
149	SLE FR 6	10	-297	6579	16.24	9.45	0.21
149	SLE QP 1	8	-285	6127	15.37	7.91	0.19
149	SLE QP 2	9	-292	6398	15.89	8.83	0.2
149	SLD 1	22	-247	5727	13.45	22.24	0.34
149	SLD 2	22	-247	5727	13.45	22.24	0.34
149	SLD 3	26	-687	6137	31.64	25.16	0.37
149	SLD 4	26	-687	6137	31.64	25.16	0.37
149	SLD 5	6	389	5576	-12.42	8.43	0.2
149	SLD 6	6	389	5576	-12.42	8.43	0.2
149	SLD 7	21	-1079	6941	48.2	18.16	0.29
149	SLD 8	21	-1079	6941	48.2	18.16	0.29
149	SLD 9	-3	494	5855	-16.41	-0.49	0.1
149	SLD 10	-3	494	5855	-16.41	-0.49	0.1
149	SLD 11	12	-974	7221	44.2	9.24	0.2
149	SLD 12	12	-974	7221	44.2	9.24	0.2
149	SLD 13	-8	103	6660	0.14	-7.49	0.03
149	SLD 14	-8	103	6660	0.14	-7.49	0.03
149	SLD 15	-4	-338	7069	18.33	-4.57	0.06
149	SLD 16	-4	-338	7069	18.33	-4.57	0.06
149	SLV 1	39	-185	4820	10.17	40.19	0.54
149	SLV 2	39	-185	4820	10.17	40.19	0.54
149	SLV 3	49	-1220	5792	52.91	47.17	0.6
149	SLV 4	49	-1220	5792	52.91	47.17	0.6
149	SLV 5	2	1310	4450	-50.65	7.66	0.2
149	SLV 6	2	1310	4450	-50.65	7.66	0.2
149	SLV 7	37	-2141	7691	91.82	30.91	0.42

Nodo	Cont.	Reazione a traslazione			Reazione a rotazione		
Ind.	N.br.	x	y	z	x	y	z
149	SLV 8	37	-2141	7691	91.82	30.91	0.42
149	SLV 9	-19	1556	5105	-60.03	-13.24	-0.02
149	SLV 10	-19	1556	5105	-60.03	-13.24	-0.02
149	SLV 11	16	-1895	8347	82.43	10.01	0.2
149	SLV 12	16	-1895	8347	82.43	10.01	0.2
149	SLV 13	-31	636	7004	-21.13	-29.5	-0.21
149	SLV 14	-31	636	7004	-21.13	-29.5	-0.21
149	SLV 15	-21	-400	7977	21.61	-22.52	-0.14
149	SLV 16	-21	-400	7977	21.61	-22.52	-0.14
150	SLU 1	6	370	6962	-10.77	11.58	0.02
150	SLU 2	6	459	6880	-13.72	10.6	0.02
150	SLU 3	6	393	7174	-11.49	11.93	0.02
150	SLU 4	6	446	7125	-13.26	11.34	0.02
150	SLU 5	6	478	7019	-14.36	10.8	0.02
150	SLU 6	6	411	7313	-12.12	12.13	0.02
150	SLU 7	7	465	7264	-13.9	11.54	0.02
150	SLU 8	6	408	7240	-12.04	11.98	0.02
150	SLU 9	6	461	7191	-13.81	11.39	0.02
150	SLU 10	7	530	7766	-15.74	12.2	0.02
150	SLU 11	7	463	8060	-13.51	13.53	0.03
150	SLU 12	7	517	8011	-15.28	12.94	0.03
150	SLU 13	7	549	7905	-16.37	12.4	0.02
150	SLU 14	7	482	8199	-14.14	13.73	0.03
150	SLU 15	7	535	8150	-15.91	13.14	0.03
150	SLU 16	7	478	8126	-14.05	13.58	0.03
150	SLU 17	7	532	8077	-15.82	12.99	0.03
150	SLU 18	7	471	8227	-13.65	13.86	0.03
150	SLU 19	7	525	8178	-15.42	13.28	0.03
150	SLU 20	7	490	8366	-14.28	14.06	0.03
150	SLU 21	8	543	8317	-16.05	13.48	0.03
150	SLU 22	7	439	7822	-12.77	13.13	0.02
150	SLU 23	7	528	7740	-15.72	12.15	0.02
150	SLU 24	7	461	8034	-13.49	13.48	0.03
150	SLU 25	7	514	7985	-15.27	12.89	0.02
150	SLU 26	7	546	7879	-16.36	12.35	0.02
150	SLU 27	7	480	8173	-14.13	13.67	0.03
150	SLU 28	7	533	8124	-15.9	13.09	0.03
150	SLU 29	7	476	8100	-14.04	13.53	0.03
150	SLU 30	7	530	8051	-15.81	12.94	0.03
150	SLU 31	8	598	8626	-17.74	13.75	0.03
150	SLU 32	8	532	8920	-15.51	15.07	0.03
150	SLU 33	8	585	8871	-17.28	14.49	0.03
150	SLU 34	8	617	8765	-18.37	13.95	0.03
150	SLU 35	8	550	9060	-16.14	15.27	0.03
150	SLU 36	8	604	9010	-17.92	14.69	0.03
150	SLU 37	8	547	8986	-16.05	15.12	0.03
150	SLU 38	8	600	8937	-17.83	14.54	0.03
150	SLU 39	8	540	9088	-15.65	15.41	0.03
150	SLU 40	8	593	9039	-17.42	14.83	0.03
150	SLU 41	8	558	9227	-16.28	15.61	0.03
150	SLU 42	8	612	9178	-18.06	15.02	0.03
150	SLU 43	8	458	8755	-13.31	14.52	0.03
150	SLU 44	8	547	8673	-16.27	13.55	0.03
150	SLU 45	8	480	8967	-14.04	14.87	0.03
150	SLU 46	8	533	8918	-15.81	14.29	0.03
150	SLU 47	8	565	8812	-16.9	13.75	0.03
150	SLU 48	8	499	9106	-14.67	15.07	0.03
150	SLU 49	8	552	9057	-16.44	14.48	0.03
150	SLU 50	8	495	9033	-14.58	14.92	0.03
150	SLU 51	8	549	8984	-16.35	14.34	0.03
150	SLU 52	9	617	9559	-18.28	15.15	0.03
150	SLU 53	9	551	9854	-16.05	16.47	0.03
150	SLU 54	9	604	9804	-17.82	15.88	0.03
150	SLU 55	9	636	9698	-18.92	15.34	0.03
150	SLU 56	9	569	9993	-16.68	16.67	0.03
150	SLU 57	9	623	9943	-18.46	16.08	0.03
150	SLU 58	9	566	9919	-16.59	16.52	0.03
150	SLU 59	9	619	9870	-18.37	15.93	0.03
150	SLU 60	9	559	10021	-16.19	16.81	0.03
150	SLU 61	9	612	9972	-17.96	16.22	0.03
150	SLU 62	9	577	10160	-16.83	17.01	0.03
150	SLU 63	9	631	10111	-18.6	16.42	0.03
150	SLU 64	9	526	9616	-15.32	16.07	0.03
150	SLU 65	9	615	9534	-18.27	15.09	0.03
150	SLU 66	9	549	9828	-16.04	16.42	0.03
150	SLU 67	9	602	9779	-17.81	15.83	0.03
150	SLU 68	9	634	9673	-18.9	15.29	0.03
150	SLU 69	9	567	9967	-16.67	16.62	0.03
150	SLU 70	9	621	9918	-18.44	16.03	0.03
150	SLU 71	9	564	9894	-16.58	16.47	0.03
150	SLU 72	9	617	9844	-18.35	15.88	0.03
150	SLU 73	10	686	10420	-20.28	16.69	0.03
150	SLU 74	10	619	10714	-18.05	18.02	0.03
150	SLU 75	10	673	10665	-19.83	17.43	0.03
150	SLU 76	10	705	10559	-20.92	16.89	0.03
150	SLU 77	10	638	10853	-18.69	18.22	0.04
150	SLU 78	10	691	10804	-20.46	17.63	0.03
150	SLU 79	10	634	10780	-18.6	18.07	0.04
150	SLU 80	10	688	10731	-20.37	17.48	0.03
150	SLU 81	10	627	10881	-18.19	18.35	0.04

Nodo	Cont.	Reazione a traslazione			Reazione a rotazione		
Ind.	N.br.	x	y	z	x	y	z
150	SLU 82	10	681	10832	-19.97	17.77	0.03
150	SLU 83	10	646	11020	-18.83	18.55	0.04
150	SLU 84	10	699	10971	-20.6	17.97	0.04
150	SLE RA 1	6	390	7207	-11.34	12.02	0.02
150	SLE RA 2	7	449	7153	-13.31	11.37	0.02
150	SLE RA 3	7	405	7349	-11.82	12.25	0.02
150	SLE RA 4	7	440	7316	-13	11.86	0.02
150	SLE RA 5	7	462	7246	-13.73	11.5	0.02
150	SLE RA 6	7	417	7442	-12.24	12.39	0.02
150	SLE RA 7	7	453	7409	-13.43	12	0.02
150	SLE RA 8	7	415	7393	-12.19	12.29	0.02
150	SLE RA 9	7	450	7360	-13.37	11.9	0.02
150	SLE RA 10	7	496	7744	-14.65	12.44	0.02
150	SLE RA 11	7	452	7940	-13.17	13.32	0.03
150	SLE RA 12	7	487	7907	-14.35	12.93	0.02
150	SLE RA 13	7	509	7836	-15.08	12.57	0.02
150	SLE RA 14	7	464	8032	-13.59	13.45	0.03
150	SLE RA 15	7	500	8000	-14.77	13.06	0.03
150	SLE RA 16	7	462	7984	-13.53	13.35	0.03
150	SLE RA 17	7	497	7951	-14.71	12.96	0.03
150	SLE RA 18	7	457	8051	-13.26	13.54	0.03
150	SLE RA 19	7	493	8019	-14.44	13.15	0.03
150	SLE RA 20	7	470	8144	-13.68	13.68	0.03
150	SLE RA 21	7	505	8111	-14.86	13.29	0.03
150	SLE FR 1	6	390	7207	-11.34	12.02	0.02
150	SLE FR 2	6	402	7197	-11.73	11.89	0.02
150	SLE FR 3	6	395	7245	-11.51	12.08	0.02
150	SLE FR 4	7	422	7450	-12.31	12.35	0.02
150	SLE FR 5	7	415	7498	-12.09	12.53	0.02
150	SLE FR 6	7	424	7629	-12.3	12.78	0.02
150	SLE QP 1	6	390	7207	-11.34	12.02	0.02
150	SLE QP 2	7	410	7461	-11.92	12.48	0.02
150	SLD 1	6	799	9231	-23.85	24.48	0.04
150	SLD 2	6	799	9231	-23.85	24.48	0.04
150	SLD 3	-2	421	9015	-11.54	20.06	0.07
150	SLD 4	-2	421	9015	-11.54	20.06	0.07
150	SLD 5	19	1101	8320	-34.16	22.77	-0.01
150	SLD 6	19	1101	8320	-34.16	22.77	-0.01
150	SLD 7	-8	-161	7599	6.86	8.06	0.07
150	SLD 8	-8	-161	7599	6.86	8.06	0.07
150	SLD 9	22	981	7322	-30.69	16.9	-0.03
150	SLD 10	22	981	7322	-30.69	16.9	-0.03
150	SLD 11	-5	-281	6601	10.32	2.18	0.06
150	SLD 12	-5	-281	6601	10.32	2.18	0.06
150	SLD 13	16	399	5906	-12.29	4.89	-0.02
150	SLD 14	16	399	5906	-12.29	4.89	-0.02
150	SLD 15	8	21	5690	0.01	0.48	0
150	SLD 16	8	21	5690	0.01	0.48	0
150	SLV 1	5	1322	11611	-39.86	40.88	0.07
150	SLV 2	5	1322	11611	-39.86	40.88	0.07
150	SLV 3	-16	436	11094	-11.06	29.89	0.13
150	SLV 4	-16	436	11094	-11.06	29.89	0.13
150	SLV 5	37	2027	9489	-63.97	37.66	-0.06
150	SLV 6	37	2027	9489	-63.97	37.66	-0.06
150	SLV 7	-31	-926	7767	32.01	1.03	0.15
150	SLV 8	-31	-926	7767	32.01	1.03	0.15
150	SLV 9	45	1746	7154	-55.85	23.92	-0.11
150	SLV 10	45	1746	7154	-55.85	23.92	-0.11
150	SLV 11	-24	-1207	5432	40.14	-12.71	0.11
150	SLV 12	-24	-1207	5432	40.14	-12.71	0.11
150	SLV 13	29	384	3827	-12.77	-4.93	-0.08
150	SLV 14	29	384	3827	-12.77	-4.93	-0.08
150	SLV 15	8	-502	3310	16.03	-15.92	-0.02
150	SLV 16	8	-502	3310	16.03	-15.92	-0.02
151	SLU 1	6	44	3689	-14.14	5.37	0.01
151	SLU 2	6	278	3509	-22.88	5.36	0.01
151	SLU 3	7	55	3810	-15.18	5.57	0.01
151	SLU 4	7	195	3702	-20.42	5.56	0.01
151	SLU 5	6	288	3591	-23.71	5.48	0.01
151	SLU 6	7	66	3892	-16.01	5.7	0.01
151	SLU 7	7	206	3784	-21.25	5.69	0.01
151	SLU 8	7	65	3853	-15.8	5.63	0.01
151	SLU 9	7	205	3745	-21.05	5.61	0.01
151	SLU 10	7	313	4108	-26.26	6.24	0.01
151	SLU 11	8	90	4409	-18.56	6.46	0.01
151	SLU 12	8	231	4301	-23.81	6.45	0.01
151	SLU 13	7	324	4190	-27.09	6.37	0.01
151	SLU 14	8	101	4491	-19.39	6.59	0.01
151	SLU 15	8	241	4383	-24.64	6.57	0.01
151	SLU 16	8	100	4453	-19.18	6.51	0.01
151	SLU 17	8	241	4344	-24.43	6.5	0.01
151	SLU 18	8	94	4545	-18.97	6.64	0.01
151	SLU 19	8	235	4437	-24.22	6.63	0.01
151	SLU 20	8	105	4627	-19.8	6.77	0.01
151	SLU 21	8	245	4519	-25.05	6.76	0.01
151	SLU 22	8	77	4245	-17.49	6.22	0.01
151	SLU 23	7	311	4065	-26.23	6.21	0.01
151	SLU 24	8	88	4365	-18.53	6.42	0.01
151	SLU 25	8	228	4257	-23.77	6.41	0.01
151	SLU 26	7	321	4147	-27.06	6.33	0.01

Nodo	Cont.	Reazione a traslazione			Reazione a rotazione		
Ind.	N.br.	x	y	z	x	y	z
151	SLU 27	8	98	4447	-19.36	6.55	0.01
151	SLU 28	8	239	4339	-24.6	6.54	0.01
151	SLU 29	8	98	4409	-19.15	6.48	0.01
151	SLU 30	8	238	4301	-24.39	6.47	0.01
151	SLU 31	8	346	4664	-29.61	7.09	0.01
151	SLU 32	9	123	4965	-21.91	7.31	0.02
151	SLU 33	9	264	4856	-27.15	7.3	0.02
151	SLU 34	9	357	4746	-30.44	7.22	0.02
151	SLU 35	9	134	5047	-22.74	7.44	0.02
151	SLU 36	9	274	4939	-27.98	7.42	0.02
151	SLU 37	9	133	5008	-22.53	7.36	0.02
151	SLU 38	9	274	4900	-27.77	7.35	0.02
151	SLU 39	9	127	5101	-22.32	7.49	0.02
151	SLU 40	9	268	4993	-27.56	7.48	0.02
151	SLU 41	9	138	5183	-23.15	7.62	0.02
151	SLU 42	9	278	5075	-28.39	7.61	0.02
151	SLU 43	8	46	4605	-17.24	6.69	0.01
151	SLU 44	8	280	4425	-25.98	6.68	0.01
151	SLU 45	8	57	4726	-18.28	6.89	0.01
151	SLU 46	8	197	4618	-23.52	6.88	0.01
151	SLU 47	8	290	4507	-26.81	6.8	0.01
151	SLU 48	8	67	4808	-19.11	7.02	0.01
151	SLU 49	8	208	4700	-24.35	7.01	0.01
151	SLU 50	8	67	4770	-18.9	6.95	0.01
151	SLU 51	8	207	4661	-24.14	6.94	0.01
151	SLU 52	9	315	5024	-29.36	7.56	0.02
151	SLU 53	9	92	5325	-21.66	7.78	0.02
151	SLU 54	9	233	5217	-26.9	7.77	0.02
151	SLU 55	9	326	5107	-30.19	7.69	0.02
151	SLU 56	10	103	5407	-22.49	7.91	0.02
151	SLU 57	9	243	5299	-27.73	7.89	0.02
151	SLU 58	9	102	5369	-22.28	7.83	0.02
151	SLU 59	9	243	5261	-27.52	7.82	0.02
151	SLU 60	10	96	5461	-22.07	7.96	0.02
151	SLU 61	9	237	5353	-27.31	7.95	0.02
151	SLU 62	10	107	5543	-22.9	8.09	0.02
151	SLU 63	10	247	5435	-28.14	8.08	0.02
151	SLU 64	9	79	5161	-20.58	7.55	0.02
151	SLU 65	9	313	4981	-29.32	7.53	0.02
151	SLU 66	9	90	5282	-21.62	7.74	0.02
151	SLU 67	9	230	5173	-26.87	7.73	0.02
151	SLU 68	9	323	5063	-30.15	7.65	0.02
151	SLU 69	10	100	5364	-22.45	7.87	0.02
151	SLU 70	9	241	5256	-27.7	7.86	0.02
151	SLU 71	9	100	5325	-22.24	7.8	0.02
151	SLU 72	9	240	5217	-27.49	7.79	0.02
151	SLU 73	10	348	5580	-32.7	8.41	0.02
151	SLU 74	10	125	5881	-25	8.63	0.02
151	SLU 75	10	266	5773	-30.25	8.62	0.02
151	SLU 76	10	359	5662	-33.53	8.54	0.02
151	SLU 77	11	136	5963	-25.83	8.76	0.02
151	SLU 78	10	276	5855	-31.08	8.74	0.02
151	SLU 79	11	135	5924	-25.63	8.68	0.02
151	SLU 80	10	275	5816	-30.87	8.67	0.02
151	SLU 81	11	129	6017	-25.41	8.81	0.02
151	SLU 82	10	270	5909	-30.66	8.8	0.02
151	SLU 83	11	140	6099	-26.24	8.94	0.02
151	SLU 84	11	280	5991	-31.49	8.93	0.02
151	SLE RA 1	7	53	3848	-15.1	5.62	0.01
151	SLE RA 2	7	209	3728	-20.92	5.6	0.01
151	SLE RA 3	7	61	3928	-15.79	5.75	0.01
151	SLE RA 4	7	154	3856	-19.29	5.74	0.01
151	SLE RA 5	7	216	3782	-21.48	5.69	0.01
151	SLE RA 6	7	68	3983	-16.34	5.83	0.01
151	SLE RA 7	7	161	3911	-19.84	5.83	0.01
151	SLE RA 8	7	67	3957	-16.21	5.79	0.01
151	SLE RA 9	7	161	3885	-19.7	5.78	0.01
151	SLE RA 10	7	233	4127	-23.18	6.2	0.01
151	SLE RA 11	8	84	4328	-18.05	6.34	0.01
151	SLE RA 12	8	178	4256	-21.54	6.33	0.01
151	SLE RA 13	7	240	4182	-23.73	6.28	0.01
151	SLE RA 14	8	91	4382	-18.6	6.42	0.01
151	SLE RA 15	8	185	4310	-22.09	6.42	0.01
151	SLE RA 16	8	91	4357	-18.46	6.38	0.01
151	SLE RA 17	8	184	4285	-21.95	6.37	0.01
151	SLE RA 18	8	87	4419	-18.32	6.46	0.01
151	SLE RA 19	8	181	4346	-21.81	6.45	0.01
151	SLE RA 20	8	94	4473	-18.87	6.55	0.01
151	SLE RA 21	8	188	4401	-22.37	6.54	0.01
151	SLE FR 1	7	53	3848	-15.1	5.62	0.01
151	SLE FR 2	7	84	3824	-16.26	5.61	0.01
151	SLE FR 3	7	56	3870	-15.32	5.65	0.01
151	SLE FR 4	7	95	3995	-17.23	5.87	0.01
151	SLE FR 5	7	66	4041	-16.29	5.9	0.01
151	SLE FR 6	7	70	4133	-16.71	6.04	0.01
151	SLE QP 1	7	53	3848	-15.1	5.62	0.01
151	SLE QP 2	7	63	4019	-16.06	5.87	0.01
151	SLD 1	7	458	4402	-30.64	10.23	0.02
151	SLD 2	7	458	4402	-30.64	10.23	0.02
151	SLD 3	4	81	4640	-16.54	8.58	0.02

Nodo	Cont.	Reazione a traslazione			Reazione a rotazione		
Ind.	N.br.	x	y	z	x	y	z
151	SLD 4	4	81	4640	-16.54	8.58	0.02
151	SLD 5	13	754	3773	-41.81	9.69	0.02
151	SLD 6	13	754	3773	-41.81	9.69	0.02
151	SLD 7	1	-503	4566	5.17	4.18	0.01
151	SLD 8	1	-503	4566	5.17	4.18	0.01
151	SLD 9	13	630	3472	-37.3	7.56	0.01
151	SLD 10	13	630	3472	-37.3	7.56	0.01
151	SLD 11	2	-627	4265	9.68	2.06	0.01
151	SLD 12	2	-627	4265	9.68	2.06	0.01
151	SLD 13	10	45	3398	-15.59	3.16	0
151	SLD 14	10	45	3398	-15.59	3.16	0
151	SLD 15	7	-332	3636	-1.49	1.51	0
151	SLD 16	7	-332	3636	-1.49	1.51	0
151	SLV 1	8	1007	4905	-50.84	16.13	0.04
151	SLV 2	8	1007	4905	-50.84	16.13	0.04
151	SLV 3	0	97	5492	-16.94	12.21	0.03
151	SLV 4	0	97	5492	-16.94	12.21	0.03
151	SLV 5	20	1726	3395	-77.91	14.89	0.03
151	SLV 6	20	1726	3395	-77.91	14.89	0.03
151	SLV 7	-8	-1306	5351	35.08	1.83	0.01
151	SLV 8	-8	-1306	5351	35.08	1.83	0.01
151	SLV 9	22	1433	2687	-67.21	9.91	0.01
151	SLV 10	22	1433	2687	-67.21	9.91	0.01
151	SLV 11	-6	-1600	4643	45.78	-3.15	0
151	SLV 12	-6	-1600	4643	45.78	-3.15	0
151	SLV 13	15	30	2546	-15.19	-0.47	-0.01
151	SLV 14	15	30	2546	-15.19	-0.47	-0.01
151	SLV 15	6	-880	3133	18.71	-4.39	-0.01
151	SLV 16	6	-880	3133	18.71	-4.39	-0.01
152	SLU 1	8	-732	5556	6.67	3.86	-0.02
152	SLU 2	8	-863	5731	11.65	3.96	-0.02
152	SLU 3	8	-747	5742	6.25	4.07	-0.02
152	SLU 4	9	-826	5847	9.24	4.13	-0.02
152	SLU 5	8	-871	5861	11.26	4.12	-0.02
152	SLU 6	9	-755	5872	5.85	4.22	-0.02
152	SLU 7	9	-833	5977	8.84	4.29	-0.02
152	SLU 8	9	-748	5817	5.88	4.16	-0.02
152	SLU 9	9	-826	5922	8.87	4.23	-0.02
152	SLU 10	8	-964	6632	11.79	3.23	-0.02
152	SLU 11	8	-848	6643	6.39	3.34	-0.02
152	SLU 12	8	-927	6748	9.38	3.4	-0.02
152	SLU 13	8	-972	6763	11.4	3.38	-0.02
152	SLU 14	9	-856	6774	5.99	3.49	-0.02
152	SLU 15	9	-934	6879	8.99	3.55	-0.02
152	SLU 16	9	-849	6718	6.03	3.43	-0.02
152	SLU 17	9	-927	6823	9.02	3.49	-0.02
152	SLU 18	8	-877	6844	6.87	2.81	-0.02
152	SLU 19	8	-955	6949	9.86	2.87	-0.02
152	SLU 20	8	-884	6974	6.48	2.96	-0.02
152	SLU 21	8	-963	7079	9.47	3.03	-0.02
152	SLU 22	9	-801	6319	5.77	4.23	-0.02
152	SLU 23	9	-932	6494	10.76	4.34	-0.02
152	SLU 24	10	-816	6505	5.35	4.44	-0.02
152	SLU 25	10	-894	6610	8.34	4.51	-0.02
152	SLU 26	10	-940	6624	10.36	4.49	-0.02
152	SLU 27	10	-824	6635	4.96	4.6	-0.03
152	SLU 28	10	-902	6740	7.95	4.66	-0.03
152	SLU 29	10	-816	6580	4.99	4.54	-0.03
152	SLU 30	10	-895	6685	7.98	4.6	-0.03
152	SLU 31	9	-1033	7395	10.9	3.61	-0.03
152	SLU 32	10	-917	7406	5.49	3.71	-0.03
152	SLU 33	10	-995	7511	8.48	3.78	-0.03
152	SLU 34	10	-1041	7526	10.5	3.76	-0.03
152	SLU 35	10	-925	7537	5.1	3.86	-0.03
152	SLU 36	10	-1003	7641	8.09	3.93	-0.03
152	SLU 37	10	-917	7481	5.13	3.8	-0.03
152	SLU 38	10	-996	7586	8.12	3.87	-0.03
152	SLU 39	9	-945	7607	5.97	3.18	-0.03
152	SLU 40	9	-1024	7712	8.96	3.25	-0.03
152	SLU 41	9	-953	7737	5.58	3.34	-0.03
152	SLU 42	9	-1032	7842	8.57	3.4	-0.03
152	SLU 43	10	-928	6962	8.98	4.88	-0.03
152	SLU 44	10	-1059	7136	13.96	4.99	-0.03
152	SLU 45	11	-943	7147	8.56	5.1	-0.03
152	SLU 46	11	-1022	7252	11.55	5.16	-0.03
152	SLU 47	10	-1067	7267	13.57	5.14	-0.03
152	SLU 48	11	-951	7278	8.16	5.25	-0.03
152	SLU 49	11	-1029	7383	11.15	5.31	-0.03
152	SLU 50	11	-944	7222	8.19	5.19	-0.03
152	SLU 51	11	-1022	7327	11.18	5.25	-0.03
152	SLU 52	10	-1160	8038	14.1	4.26	-0.03
152	SLU 53	10	-1044	8049	8.7	4.36	-0.03
152	SLU 54	11	-1123	8154	11.69	4.43	-0.03
152	SLU 55	10	-1168	8168	13.71	4.41	-0.03
152	SLU 56	11	-1052	8179	8.3	4.52	-0.03
152	SLU 57	11	-1130	8284	11.29	4.58	-0.03
152	SLU 58	11	-1045	8124	8.33	4.46	-0.03
152	SLU 59	11	-1123	8229	11.32	4.52	-0.03
152	SLU 60	10	-1073	8249	9.18	3.84	-0.03
152	SLU 61	10	-1151	8354	12.17	3.9	-0.03

Nodo	Cont.	Reazione a traslazione			Reazione a rotazione		
Ind.	N.br.	x	y	z	x	y	z
152	SLU 62	10	-1080	8380	8.79	3.99	-0.03
152	SLU 63	10	-1159	8484	11.78	4.05	-0.03
152	SLU 64	11	-997	7724	8.08	5.26	-0.03
152	SLU 65	11	-1128	7899	13.06	5.37	-0.03
152	SLU 66	12	-1012	7910	7.66	5.47	-0.03
152	SLU 67	12	-1091	8015	10.65	5.54	-0.03
152	SLU 68	12	-1136	8030	12.67	5.52	-0.03
152	SLU 69	12	-1020	8041	7.26	5.62	-0.03
152	SLU 70	12	-1098	8145	10.25	5.69	-0.03
152	SLU 71	12	-1013	7985	7.29	5.56	-0.03
152	SLU 72	12	-1091	8090	10.29	5.63	-0.03
152	SLU 73	11	-1229	8801	13.21	4.63	-0.03
152	SLU 74	12	-1113	8812	7.8	4.74	-0.03
152	SLU 75	12	-1192	8917	10.79	4.8	-0.03
152	SLU 76	12	-1237	8931	12.81	4.79	-0.03
152	SLU 77	12	-1121	8942	7.41	4.89	-0.03
152	SLU 78	12	-1199	9047	10.4	4.96	-0.03
152	SLU 79	12	-1114	8886	7.44	4.83	-0.03
152	SLU 80	12	-1192	8991	10.43	4.9	-0.03
152	SLU 81	11	-1142	9012	8.28	4.21	-0.03
152	SLU 82	11	-1220	9117	11.27	4.28	-0.03
152	SLU 83	11	-1149	9142	7.89	4.37	-0.03
152	SLU 84	12	-1228	9247	10.88	4.43	-0.03
152	SLE RA 1	8	-752	5774	6.41	3.96	-0.02
152	SLE RA 2	8	-839	5891	9.74	4.03	-0.02
152	SLE RA 3	9	-762	5898	6.13	4.1	-0.02
152	SLE RA 4	9	-814	5968	8.12	4.15	-0.02
152	SLE RA 5	9	-844	5978	9.47	4.14	-0.02
152	SLE RA 6	9	-767	5985	5.87	4.21	-0.02
152	SLE RA 7	9	-819	6055	7.86	4.25	-0.02
152	SLE RA 8	9	-762	5948	5.89	4.17	-0.02
152	SLE RA 9	9	-815	6018	7.88	4.21	-0.02
152	SLE RA 10	8	-907	6492	9.83	3.55	-0.02
152	SLE RA 11	9	-829	6499	6.23	3.62	-0.02
152	SLE RA 12	9	-881	6569	8.22	3.66	-0.02
152	SLE RA 13	9	-912	6579	9.57	3.65	-0.02
152	SLE RA 14	9	-834	6586	5.96	3.72	-0.02
152	SLE RA 15	9	-887	6656	7.96	3.76	-0.02
152	SLE RA 16	9	-829	6549	5.98	3.68	-0.02
152	SLE RA 17	9	-882	6619	7.98	3.72	-0.02
152	SLE RA 18	8	-848	6633	6.55	3.26	-0.02
152	SLE RA 19	8	-901	6703	8.54	3.31	-0.02
152	SLE RA 20	9	-853	6719	6.29	3.37	-0.02
152	SLE RA 21	9	-906	6789	8.28	3.41	-0.02
152	SLE FR 1	8	-752	5774	6.41	3.96	-0.02
152	SLE FR 2	8	-769	5797	7.08	3.98	-0.02
152	SLE FR 3	8	-754	5809	6.31	4	-0.02
152	SLE FR 4	8	-798	6055	7.12	3.77	-0.02
152	SLE FR 5	8	-783	6066	6.35	3.79	-0.02
152	SLE FR 6	8	-800	6203	6.48	3.61	-0.02
152	SLE QP 1	8	-752	5774	6.41	3.96	-0.02
152	SLE QP 2	8	-781	6032	6.45	3.75	-0.02
152	SLD 1	15	-351	6492	-10.62	13.9	-0.02
152	SLD 2	15	-351	6492	-10.62	13.9	-0.02
152	SLD 3	14	-807	7018	6.81	15.15	-0.01
152	SLD 4	14	-807	7018	6.81	15.15	-0.01
152	SLD 5	13	39	5372	-25.1	4.9	-0.03
152	SLD 6	13	39	5372	-25.1	4.9	-0.03
152	SLD 7	8	-1480	7125	32.99	9.07	-0.01
152	SLD 8	8	-1480	7125	32.99	9.07	-0.01
152	SLD 9	9	-82	4938	-20.08	-1.56	-0.03
152	SLD 10	9	-82	4938	-20.08	-1.56	-0.03
152	SLD 11	4	-1601	6692	38.01	2.61	-0.02
152	SLD 12	4	-1601	6692	38.01	2.61	-0.02
152	SLD 13	3	-755	5045	6.1	-7.65	-0.03
152	SLD 14	3	-755	5045	6.1	-7.65	-0.03
152	SLD 15	1	-1211	5572	23.53	-6.4	-0.03
152	SLD 16	1	-1211	5572	23.53	-6.4	-0.03
152	SLV 1	25	230	7103	-33.67	27.5	-0.01
152	SLV 2	25	230	7103	-33.67	27.5	-0.01
152	SLV 3	21	-843	8355	7.33	30.48	0
152	SLV 4	21	-843	8355	7.33	30.48	0
152	SLV 5	19	1150	4455	-67.76	6.35	-0.03
152	SLV 6	19	1150	4455	-67.76	6.35	-0.03
152	SLV 7	7	-2427	8626	68.89	16.29	0
152	SLV 8	7	-2427	8626	68.89	16.29	0
152	SLV 9	10	865	3437	-55.98	-8.79	-0.04
152	SLV 10	10	865	3437	-55.98	-8.79	-0.04
152	SLV 11	-2	-2711	7608	80.66	1.15	-0.01
152	SLV 12	-2	-2711	7608	80.66	1.15	-0.01
152	SLV 13	-4	-719	3709	5.58	-22.97	-0.04
152	SLV 14	-4	-719	3709	5.58	-22.97	-0.04
152	SLV 15	-8	-1792	4960	46.57	-19.99	-0.04
152	SLV 16	-8	-1792	4960	46.57	-19.99	-0.04
153	SLU 1	-5	-810	4414	52.15	-2.03	0.01
153	SLU 2	-5	-566	4197	42.68	-2.08	0.01
153	SLU 3	-5	-835	4556	54.25	-2.12	0.01
153	SLU 4	-5	-689	4425	48.57	-2.15	0.01
153	SLU 5	-5	-580	4287	44.05	-2.15	0.01
153	SLU 6	-5	-850	4645	55.62	-2.18	0.01

Nodo	Cont.	Reazione a traslazione			Reazione a rotazione		
Ind.	N.br.	x	y	z	x	y	z
153	SLU 7	-5	-704	4515	49.94	-2.22	0.01
153	SLU 8	-5	-839	4594	54.88	-2.15	0.01
153	SLU 9	-5	-693	4464	49.2	-2.19	0.01
153	SLU 10	-5	-676	4940	51	-2.44	0.01
153	SLU 11	-6	-945	5298	62.57	-2.47	0.01
153	SLU 12	-6	-799	5168	56.89	-2.51	0.01
153	SLU 13	-6	-690	5030	52.37	-2.5	0.01
153	SLU 14	-6	-960	5388	63.94	-2.54	0.01
153	SLU 15	-6	-814	5258	58.26	-2.57	0.01
153	SLU 16	-6	-949	5337	63.2	-2.51	0.01
153	SLU 17	-6	-803	5207	57.52	-2.54	0.01
153	SLU 18	-6	-967	5475	64.04	-2.53	0.01
153	SLU 19	-6	-820	5345	58.35	-2.57	0.01
153	SLU 20	-6	-981	5565	65.4	-2.6	0.01
153	SLU 21	-6	-835	5435	59.72	-2.63	0.01
153	SLU 22	-6	-919	5102	60.38	-2.37	0.01
153	SLU 23	-5	-675	4885	50.91	-2.43	0.01
153	SLU 24	-6	-945	5243	62.49	-2.46	0.01
153	SLU 25	-6	-799	5113	56.81	-2.5	0.01
153	SLU 26	-6	-690	4975	52.28	-2.49	0.01
153	SLU 27	-6	-960	5333	63.85	-2.52	0.01
153	SLU 28	-6	-813	5203	58.17	-2.56	0.01
153	SLU 29	-6	-949	5282	63.12	-2.5	0.01
153	SLU 30	-6	-802	5152	57.43	-2.53	0.01
153	SLU 31	-6	-785	5628	59.23	-2.78	0.01
153	SLU 32	-7	-1055	5986	70.81	-2.82	0.01
153	SLU 33	-7	-909	5856	65.13	-2.85	0.01
153	SLU 34	-6	-800	5718	60.6	-2.85	0.01
153	SLU 35	-7	-1070	6076	72.17	-2.88	0.01
153	SLU 36	-7	-923	5946	66.49	-2.92	0.01
153	SLU 37	-7	-1059	6024	71.44	-2.85	0.01
153	SLU 38	-7	-912	5894	65.76	-2.89	0.01
153	SLU 39	-7	-1076	6163	72.27	-2.88	0.01
153	SLU 40	-7	-930	6033	66.59	-2.91	0.01
153	SLU 41	-7	-1091	6253	73.64	-2.94	0.01
153	SLU 42	-7	-945	6123	67.96	-2.98	0.01
153	SLU 43	-6	-1015	5502	64.97	-2.52	0.01
153	SLU 44	-6	-771	5286	55.5	-2.57	0.01
153	SLU 45	-6	-1041	5644	67.07	-2.61	0.01
153	SLU 46	-6	-894	5514	61.39	-2.64	0.01
153	SLU 47	-6	-786	5376	56.87	-2.64	0.01
153	SLU 48	-6	-1055	5734	68.44	-2.67	0.01
153	SLU 49	-6	-909	5604	62.76	-2.71	0.01
153	SLU 50	-6	-1044	5682	67.7	-2.64	0.01
153	SLU 51	-6	-898	5552	62.02	-2.68	0.01
153	SLU 52	-7	-881	6028	63.82	-2.93	0.01
153	SLU 53	-7	-1150	6387	75.4	-2.96	0.01
153	SLU 54	-7	-1004	6257	69.71	-3	0.01
153	SLU 55	-7	-896	6118	65.19	-2.99	0.01
153	SLU 56	-7	-1165	6477	76.76	-3.03	0.01
153	SLU 57	-7	-1019	6346	71.08	-3.06	0.01
153	SLU 58	-7	-1154	6425	76.02	-3	0.01
153	SLU 59	-7	-1008	6295	70.34	-3.03	0.01
153	SLU 60	-7	-1172	6563	76.86	-3.02	0.01
153	SLU 61	-7	-1026	6433	71.18	-3.06	0.01
153	SLU 62	-7	-1186	6653	78.22	-3.09	0.01
153	SLU 63	-7	-1040	6523	72.54	-3.12	0.01
153	SLU 64	-7	-1125	6190	73.2	-2.86	0.01
153	SLU 65	-7	-881	5974	63.74	-2.92	0.01
153	SLU 66	-7	-1150	6332	75.31	-2.95	0.01
153	SLU 67	-7	-1004	6202	69.63	-2.99	0.01
153	SLU 68	-7	-895	6063	65.1	-2.98	0.01
153	SLU 69	-7	-1165	6422	76.67	-3.01	0.01
153	SLU 70	-7	-1019	6292	70.99	-3.05	0.01
153	SLU 71	-7	-1154	6370	75.94	-2.99	0.01
153	SLU 72	-7	-1008	6240	70.26	-3.02	0.01
153	SLU 73	-7	-991	6716	72.06	-3.27	0.01
153	SLU 74	-8	-1260	7074	83.63	-3.31	0.01
153	SLU 75	-8	-1114	6944	77.95	-3.34	0.01
153	SLU 76	-8	-1005	6806	73.42	-3.34	0.01
153	SLU 77	-8	-1275	7164	85	-3.37	0.01
153	SLU 78	-8	-1129	7034	79.32	-3.41	0.01
153	SLU 79	-8	-1264	7113	84.26	-3.34	0.01
153	SLU 80	-8	-1118	6983	78.58	-3.38	0.01
153	SLU 81	-8	-1282	7251	85.09	-3.37	0.01
153	SLU 82	-8	-1135	7121	79.41	-3.4	0.01
153	SLU 83	-8	-1296	7341	86.46	-3.43	0.01
153	SLU 84	-8	-1150	7211	80.78	-3.47	0.01
153	SLE RA 1	-5	-841	4611	54.5	-2.12	0.01
153	SLE RA 2	-5	-678	4466	48.19	-2.16	0.01
153	SLE RA 3	-5	-858	4705	55.9	-2.18	0.01
153	SLE RA 4	-5	-761	4618	52.12	-2.21	0.01
153	SLE RA 5	-5	-688	4526	49.1	-2.2	0.01
153	SLE RA 6	-5	-868	4765	56.81	-2.23	0.01
153	SLE RA 7	-5	-770	4678	53.03	-2.25	0.01
153	SLE RA 8	-5	-860	4730	56.32	-2.21	0.01
153	SLE RA 9	-5	-763	4644	52.54	-2.23	0.01
153	SLE RA 10	-6	-752	4961	53.74	-2.4	0.01
153	SLE RA 11	-6	-931	5200	61.45	-2.42	0.01
153	SLE RA 12	-6	-834	5113	57.66	-2.45	0.01

Nodo	Cont.	Reazione a traslazione			Reazione a rotazione		
Ind.	N.br.	x	y	z	x	y	z
153	SLE RA 13	-6	-761	5021	54.65	-2.44	0.01
153	SLE RA 14	-6	-941	5260	62.36	-2.46	0.01
153	SLE RA 15	-6	-844	5173	58.58	-2.49	0.01
153	SLE RA 16	-6	-934	5226	61.87	-2.45	0.01
153	SLE RA 17	-6	-836	5139	58.08	-2.47	0.01
153	SLE RA 18	-6	-946	5318	62.43	-2.46	0.01
153	SLE RA 19	-6	-848	5231	58.64	-2.49	0.01
153	SLE RA 20	-6	-955	5378	63.34	-2.5	0.01
153	SLE RA 21	-6	-858	5291	59.55	-2.53	0.01
153	SLE FR 1	-5	-841	4611	54.5	-2.12	0.01
153	SLE FR 2	-5	-808	4582	53.24	-2.13	0.01
153	SLE FR 3	-5	-845	4635	54.87	-2.14	0.01
153	SLE FR 4	-5	-840	4794	55.62	-2.23	0.01
153	SLE FR 5	-5	-876	4847	57.24	-2.24	0.01
153	SLE FR 6	-6	-893	4964	58.46	-2.29	0.01
153	SLE QP 1	-5	-841	4611	54.5	-2.12	0.01
153	SLE QP 2	-5	-872	4823	56.88	-2.23	0.01
153	SLD 1	-8	-885	4195	42.62	-0.25	0.02
153	SLD 2	-8	-885	4195	42.62	-0.25	0.02
153	SLD 3	-6	-1253	4444	57.13	0.94	0.01
153	SLD 4	-6	-1253	4444	57.13	0.94	0.01
153	SLD 5	-11	-318	4257	30.59	-3.45	0.02
153	SLD 6	-11	-318	4257	30.59	-3.45	0.02
153	SLD 7	-1	-1545	5087	78.97	0.54	0
153	SLD 8	-1	-1545	5087	78.97	0.54	0
153	SLD 9	-10	-200	4559	34.79	-4.99	0.01
153	SLD 10	-10	-200	4559	34.79	-4.99	0.01
153	SLD 11	0	-1427	5389	83.17	-1	0
153	SLD 12	0	-1427	5389	83.17	-1	0
153	SLD 13	-5	-491	5202	56.63	-5.4	0
153	SLD 14	-5	-491	5202	56.63	-5.4	0
153	SLD 15	-2	-860	5451	71.14	-4.2	0
153	SLD 16	-2	-860	5451	71.14	-4.2	0
153	SLV 1	-13	-895	3330	22.56	2.51	0.03
153	SLV 2	-13	-895	3330	22.56	2.51	0.03
153	SLV 3	-6	-1784	3953	57.79	5.37	0.02
153	SLV 4	-6	-1784	3953	57.79	5.37	0.02
153	SLV 5	-17	470	3429	-6.84	-5.14	0.03
153	SLV 6	-17	470	3429	-6.84	-5.14	0.03
153	SLV 7	4	-2495	5508	110.58	4.39	0
153	SLV 8	4	-2495	5508	110.58	4.39	0
153	SLV 9	-15	750	4138	3.18	-8.84	0.02
153	SLV 10	-15	750	4138	3.18	-8.84	0.02
153	SLV 11	7	-2214	6216	120.6	0.69	-0.01
153	SLV 12	7	-2214	6216	120.6	0.69	-0.01
153	SLV 13	-5	40	5692	55.97	-9.82	0
153	SLV 14	-5	40	5692	55.97	-9.82	0
153	SLV 15	2	-850	6316	91.2	-6.96	-0.01
153	SLV 16	2	-850	6316	91.2	-6.96	-0.01
154	SLU 1	-5	191	6422	-9.26	-1.78	0
154	SLU 2	-5	268	6373	-12.98	-0.82	0
154	SLU 3	-5	201	6608	-9.76	-1.85	0
154	SLU 4	-5	247	6578	-12	-1.27	0
154	SLU 5	-5	274	6487	-13.33	-0.87	0
154	SLU 6	-5	208	6721	-10.11	-1.89	0
154	SLU 7	-5	253	6692	-12.35	-1.31	0
154	SLU 8	-5	205	6650	-9.96	-1.87	0
154	SLU 9	-5	250	6620	-12.19	-1.29	0
154	SLU 10	-6	319	7229	-15.31	-1.09	0
154	SLU 11	-5	253	7464	-12.1	-2.11	0
154	SLU 12	-6	299	7434	-14.33	-1.54	0
154	SLU 13	-6	326	7342	-15.66	-1.13	0
154	SLU 14	-6	259	7577	-12.45	-2.16	0
154	SLU 15	-6	305	7548	-14.68	-1.58	0
154	SLU 16	-5	256	7505	-12.29	-2.14	0
154	SLU 17	-6	302	7476	-14.53	-1.56	0
154	SLU 18	-6	265	7645	-12.59	-2.16	0
154	SLU 19	-6	311	7615	-14.82	-1.59	0
154	SLU 20	-6	272	7759	-12.94	-2.21	0
154	SLU 21	-6	318	7729	-15.17	-1.63	0
154	SLU 22	-5	238	7236	-11.44	-2.04	0
154	SLU 23	-6	314	7187	-15.16	-1.08	0
154	SLU 24	-5	248	7421	-11.94	-2.1	0
154	SLU 25	-6	294	7392	-14.17	-1.53	0
154	SLU 26	-6	321	7300	-15.51	-1.12	0
154	SLU 27	-6	255	7535	-12.29	-2.15	0
154	SLU 28	-6	300	7505	-14.52	-1.57	0
154	SLU 29	-5	251	7463	-12.14	-2.13	0
154	SLU 30	-6	297	7433	-14.37	-1.55	0
154	SLU 31	-6	366	8042	-17.49	-1.34	0
154	SLU 32	-6	300	8277	-14.27	-2.37	0
154	SLU 33	-6	345	8248	-16.5	-1.79	0
154	SLU 34	-6	373	8156	-17.84	-1.39	0
154	SLU 35	-6	306	8391	-14.62	-2.41	0
154	SLU 36	-6	352	8361	-16.86	-1.83	0
154	SLU 37	-6	303	8319	-14.47	-2.39	0
154	SLU 38	-6	349	8289	-16.7	-1.81	0
154	SLU 39	-6	312	8459	-14.77	-2.42	0
154	SLU 40	-6	358	8429	-17	-1.84	0
154	SLU 41	-6	319	8572	-15.12	-2.46	0

Nodo	Cont.	Reazione a traslazione			Reazione a rotazione		
Ind.	N.br.	x	y	z	x	y	z
154	SLU 42	-6	365	8543	-17.35	-1.88	0
154	SLU 43	-6	233	8070	-11.29	-2.23	0
154	SLU 44	-6	309	8021	-15.01	-1.27	0
154	SLU 45	-6	242	8256	-11.8	-2.3	0
154	SLU 46	-6	288	8226	-14.03	-1.72	0
154	SLU 47	-6	315	8134	-15.36	-1.31	0
154	SLU 48	-6	249	8369	-12.15	-2.34	0
154	SLU 49	-6	295	8339	-14.38	-1.76	0
154	SLU 50	-6	246	8297	-11.99	-2.32	0
154	SLU 51	-6	292	8268	-14.22	-1.74	0
154	SLU 52	-7	361	8877	-17.35	-1.53	0
154	SLU 53	-7	294	9111	-14.13	-2.56	0
154	SLU 54	-7	340	9082	-16.36	-1.98	0
154	SLU 55	-7	367	8990	-17.7	-1.58	0
154	SLU 56	-7	301	9225	-14.48	-2.61	0
154	SLU 57	-7	346	9195	-16.71	-2.03	0
154	SLU 58	-7	298	9153	-14.33	-2.59	0
154	SLU 59	-7	343	9124	-16.56	-2.01	0
154	SLU 60	-7	307	9293	-14.62	-2.61	0
154	SLU 61	-7	352	9263	-16.86	-2.03	0
154	SLU 62	-7	313	9406	-14.97	-2.65	0
154	SLU 63	-7	359	9377	-17.21	-2.08	0
154	SLU 64	-6	280	8884	-13.47	-2.49	0
154	SLU 65	-7	356	8834	-17.19	-1.52	0
154	SLU 66	-7	289	9069	-13.97	-2.55	0
154	SLU 67	-7	335	9040	-16.2	-1.97	0
154	SLU 68	-7	362	8948	-17.54	-1.57	0
154	SLU 69	-7	296	9183	-14.32	-2.59	0
154	SLU 70	-7	342	9153	-16.55	-2.02	0
154	SLU 71	-7	293	9111	-14.17	-2.57	0
154	SLU 72	-7	338	9081	-16.4	-2	0
154	SLU 73	-7	408	9690	-19.52	-1.79	0
154	SLU 74	-7	341	9925	-16.31	-2.82	0
154	SLU 75	-7	387	9895	-18.54	-2.24	0
154	SLU 76	-7	414	9804	-19.87	-1.83	0
154	SLU 77	-7	348	10039	-16.66	-2.86	0
154	SLU 78	-8	393	10009	-18.89	-2.28	0
154	SLU 79	-7	345	9967	-16.5	-2.84	0
154	SLU 80	-7	390	9937	-18.73	-2.26	0
154	SLU 81	-7	354	10106	-16.8	-2.87	0
154	SLU 82	-7	399	10077	-19.03	-2.29	0
154	SLU 83	-7	360	10220	-17.15	-2.91	0
154	SLU 84	-8	406	10190	-19.38	-2.33	0
154	SLE RA 1	-5	205	6655	-9.88	-1.86	0
154	SLE RA 2	-5	256	6622	-12.36	-1.21	0
154	SLE RA 3	-5	211	6778	-10.22	-1.9	0
154	SLE RA 4	-5	242	6759	-11.71	-1.51	0
154	SLE RA 5	-5	260	6698	-12.6	-1.24	0
154	SLE RA 6	-5	216	6854	-10.45	-1.93	0
154	SLE RA 7	-5	246	6834	-11.94	-1.54	0
154	SLE RA 8	-5	214	6806	-10.35	-1.92	0
154	SLE RA 9	-5	244	6787	-11.84	-1.53	0
154	SLE RA 10	-5	290	7192	-13.92	-1.39	0
154	SLE RA 11	-5	246	7349	-11.77	-2.08	0
154	SLE RA 12	-5	276	7329	-13.26	-1.69	0
154	SLE RA 13	-5	294	7268	-14.15	-1.42	0
154	SLE RA 14	-5	250	7425	-12.01	-2.11	0
154	SLE RA 15	-6	281	7405	-13.49	-1.72	0
154	SLE RA 16	-5	248	7377	-11.9	-2.09	0
154	SLE RA 17	-5	279	7357	-13.39	-1.71	0
154	SLE RA 18	-5	254	7470	-12.1	-2.11	0
154	SLE RA 19	-6	285	7450	-13.59	-1.72	0
154	SLE RA 20	-5	258	7546	-12.34	-2.14	0
154	SLE RA 21	-6	289	7526	-13.82	-1.75	0
154	SLE FR 1	-5	205	6655	-9.88	-1.86	0
154	SLE FR 2	-5	215	6648	-10.38	-1.73	0
154	SLE FR 3	-5	207	6685	-9.97	-1.87	0
154	SLE FR 4	-5	230	6893	-11.04	-1.8	0
154	SLE FR 5	-5	221	6930	-10.64	-1.94	0
154	SLE FR 6	-5	229	7062	-10.99	-1.98	0
154	SLE QP 1	-5	205	6655	-9.88	-1.86	0
154	SLE QP 2	-5	220	6899	-10.55	-1.93	0
154	SLD 1	-15	274	5328	-13.76	1	0.02
154	SLD 2	-15	274	5328	-13.76	1	0.02
154	SLD 3	-6	-110	5067	4.68	5.63	0.02
154	SLD 4	-6	-110	5067	4.68	5.63	0.02
154	SLD 5	-21	818	6824	-39.49	-8.07	0.01
154	SLD 6	-21	818	6824	-39.49	-8.07	0.01
154	SLD 7	8	-461	5954	21.99	7.35	0
154	SLD 8	8	-461	5954	21.99	7.35	0
154	SLD 9	-18	900	7845	-43.09	-11.22	0
154	SLD 10	-18	900	7845	-43.09	-11.22	0
154	SLD 11	11	-378	6975	18.39	4.2	-0.01
154	SLD 12	11	-378	6975	18.39	4.2	-0.01
154	SLD 13	-4	549	8732	-25.78	-9.49	-0.02
154	SLD 14	-4	549	8732	-25.78	-9.49	-0.02
154	SLD 15	5	165	8471	-7.34	-4.87	-0.02
154	SLD 16	5	165	8471	-7.34	-4.87	-0.02
154	SLV 1	-29	346	3229	-18	4.67	0.05
154	SLV 2	-29	346	3229	-18	4.67	0.05

Nodo	Cont.	Reazione a traslazione			Reazione a rotazione		
Ind.	N.br.	x	y	z	x	y	z
154	SLV 3	-8	-550	2601	25.08	16.4	0.04
154	SLV 4	-8	-550	2601	25.08	16.4	0.04
154	SLV 5	-45	1617	6751	-78.13	-17.74	0.03
154	SLV 6	-45	1617	6751	-78.13	-17.74	0.03
154	SLV 7	27	-1371	4657	65.48	21.36	0
154	SLV 8	27	-1371	4657	65.48	21.36	0
154	SLV 9	-37	1810	9142	-86.58	-25.22	0.01
154	SLV 10	-37	1810	9142	-86.58	-25.22	0.01
154	SLV 11	35	-1178	7048	57.03	13.88	-0.03
154	SLV 12	35	-1178	7048	57.03	13.88	-0.03
154	SLV 13	-2	990	11198	-46.17	-20.27	-0.04
154	SLV 14	-2	990	11198	-46.17	-20.27	-0.04
154	SLV 15	19	93	10569	-3.09	-8.54	-0.05
154	SLV 16	19	93	10569	-3.09	-8.54	-0.05
155	SLU 1	0	366	1912	-7.98	0.22	0.01
155	SLU 2	0	368	1921	-8	0.22	0.02
155	SLU 3	0	381	1968	-8.34	0.24	0.01
155	SLU 4	0	382	1974	-8.35	0.24	0.01
155	SLU 5	0	378	1960	-8.24	0.24	0.01
155	SLU 6	0	391	2007	-8.59	0.26	0.01
155	SLU 7	0	392	2012	-8.59	0.26	0.01
155	SLU 8	0	387	1989	-8.47	0.26	0.01
155	SLU 9	0	388	1995	-8.48	0.26	0.01
155	SLU 10	0	453	2198	-10.27	0.24	0.02
155	SLU 11	0	467	2245	-10.62	0.26	0.02
155	SLU 12	0	468	2250	-10.62	0.26	0.02
155	SLU 13	0	464	2236	-10.52	0.26	0.02
155	SLU 14	0	477	2283	-10.86	0.28	0.02
155	SLU 15	0	478	2289	-10.87	0.28	0.02
155	SLU 16	0	472	2266	-10.75	0.28	0.02
155	SLU 17	0	473	2271	-10.76	0.28	0.02
155	SLU 18	0	488	2307	-11.23	0.24	0.02
155	SLU 19	0	489	2313	-11.24	0.24	0.02
155	SLU 20	0	499	2346	-11.48	0.27	0.02
155	SLU 21	0	500	2351	-11.49	0.27	0.02
155	SLU 22	0	436	2160	-9.7	0.25	0.02
155	SLU 23	0	437	2169	-9.71	0.25	0.02
155	SLU 24	0	451	2216	-10.06	0.27	0.02
155	SLU 25	0	452	2221	-10.06	0.27	0.02
155	SLU 26	0	448	2208	-9.96	0.27	0.02
155	SLU 27	0	461	2255	-10.3	0.29	0.02
155	SLU 28	0	462	2260	-10.31	0.3	0.02
155	SLU 29	0	456	2237	-10.19	0.3	0.02
155	SLU 30	0	457	2243	-10.2	0.3	0.02
155	SLU 31	0	523	2445	-11.99	0.27	0.02
155	SLU 32	0	536	2493	-12.33	0.29	0.02
155	SLU 33	0	537	2498	-12.34	0.29	0.02
155	SLU 34	0	533	2484	-12.24	0.29	0.02
155	SLU 35	0	547	2531	-12.58	0.31	0.02
155	SLU 36	0	548	2536	-12.59	0.31	0.02
155	SLU 37	0	542	2514	-12.47	0.31	0.02
155	SLU 38	0	543	2519	-12.48	0.32	0.02
155	SLU 39	0	558	2555	-12.95	0.28	0.02
155	SLU 40	0	559	2560	-12.96	0.28	0.02
155	SLU 41	0	568	2594	-13.2	0.3	0.02
155	SLU 42	0	569	2599	-13.21	0.3	0.02
155	SLU 43	0	452	2401	-9.79	0.27	0.02
155	SLU 44	0	454	2410	-9.8	0.27	0.02
155	SLU 45	0	467	2457	-10.15	0.29	0.02
155	SLU 46	0	468	2462	-10.15	0.29	0.02
155	SLU 47	0	464	2448	-10.05	0.29	0.02
155	SLU 48	0	477	2496	-10.39	0.32	0.02
155	SLU 49	0	478	2501	-10.4	0.32	0.02
155	SLU 50	0	473	2478	-10.28	0.32	0.02
155	SLU 51	0	474	2483	-10.29	0.32	0.02
155	SLU 52	0	539	2686	-12.08	0.29	0.02
155	SLU 53	0	553	2733	-12.42	0.31	0.02
155	SLU 54	0	554	2739	-12.43	0.31	0.02
155	SLU 55	0	550	2725	-12.32	0.31	0.02
155	SLU 56	0	563	2772	-12.67	0.34	0.02
155	SLU 57	0	564	2777	-12.68	0.34	0.02
155	SLU 58	0	558	2755	-12.56	0.34	0.02
155	SLU 59	0	559	2760	-12.57	0.34	0.02
155	SLU 60	0	574	2796	-13.04	0.3	0.02
155	SLU 61	0	575	2801	-13.05	0.3	0.02
155	SLU 62	0	585	2834	-13.29	0.32	0.02
155	SLU 63	0	586	2840	-13.29	0.32	0.02
155	SLU 64	0	522	2649	-11.51	0.3	0.02
155	SLU 65	0	523	2658	-11.52	0.3	0.02
155	SLU 66	0	537	2705	-11.86	0.32	0.02
155	SLU 67	0	538	2710	-11.87	0.33	0.02
155	SLU 68	0	534	2696	-11.77	0.33	0.02
155	SLU 69	0	547	2743	-12.11	0.35	0.02
155	SLU 70	0	548	2749	-12.12	0.35	0.02
155	SLU 71	0	542	2726	-12	0.35	0.02
155	SLU 72	0	543	2731	-12.01	0.35	0.02
155	SLU 73	0	609	2934	-13.8	0.32	0.02
155	SLU 74	0	622	2981	-14.14	0.34	0.02
155	SLU 75	0	623	2987	-14.15	0.34	0.02
155	SLU 76	0	619	2973	-14.04	0.35	0.02

Nodo	Cont.	Reazione a traslazione			Reazione a rotazione		
Ind.	N.br.	x	y	z	x	y	z
155	SLU 77	0	633	3020	-14.38	0.37	0.02
155	SLU 78	0	634	3025	-14.39	0.37	0.02
155	SLU 79	0	628	3002	-14.27	0.37	0.02
155	SLU 80	0	629	3008	-14.28	0.37	0.02
155	SLU 81	0	644	3044	-14.76	0.33	0.02
155	SLU 82	0	645	3049	-14.77	0.33	0.02
155	SLU 83	0	654	3082	-15	0.35	0.02
155	SLU 84	0	655	3088	-15.01	0.35	0.02
155	SLE RA 1	0	386	1983	-8.47	0.23	0.02
155	SLE RA 2	0	387	1989	-8.48	0.23	0.02
155	SLE RA 3	0	396	2020	-8.71	0.24	0.02
155	SLE RA 4	0	397	2024	-8.72	0.24	0.02
155	SLE RA 5	0	394	2015	-8.65	0.24	0.02
155	SLE RA 6	0	403	2046	-8.88	0.26	0.02
155	SLE RA 7	0	403	2050	-8.88	0.26	0.02
155	SLE RA 8	0	400	2035	-8.8	0.26	0.01
155	SLE RA 9	0	400	2038	-8.81	0.26	0.02
155	SLE RA 10	0	444	2173	-10	0.24	0.02
155	SLE RA 11	0	453	2205	-10.23	0.25	0.02
155	SLE RA 12	0	454	2208	-10.23	0.25	0.02
155	SLE RA 13	0	451	2199	-10.16	0.25	0.02
155	SLE RA 14	0	460	2230	-10.39	0.27	0.02
155	SLE RA 15	0	461	2234	-10.4	0.27	0.02
155	SLE RA 16	0	457	2219	-10.32	0.27	0.02
155	SLE RA 17	0	457	2222	-10.32	0.27	0.02
155	SLE RA 18	0	468	2246	-10.64	0.24	0.02
155	SLE RA 19	0	468	2250	-10.65	0.24	0.02
155	SLE RA 20	0	474	2272	-10.81	0.26	0.02
155	SLE RA 21	0	475	2276	-10.81	0.26	0.02
155	SLE FR 1	0	386	1983	-8.47	0.23	0.02
155	SLE FR 2	0	386	1984	-8.48	0.23	0.02
155	SLE FR 3	0	389	1993	-8.54	0.23	0.02
155	SLE FR 4	0	411	2063	-9.13	0.23	0.02
155	SLE FR 5	0	413	2072	-9.19	0.24	0.02
155	SLE FR 6	0	427	2115	-9.56	0.23	0.02
155	SLE QP 1	0	386	1983	-8.47	0.23	0.02
155	SLE QP 2	0	410	2062	-9.12	0.23	0.02
155	SLD 1	3	466	2082	-11.62	4.08	-0.17
155	SLD 2	3	466	2082	-11.62	4.08	-0.17
155	SLD 3	3	385	2161	-7.66	3.63	-0.14
155	SLD 4	3	385	2161	-7.66	3.63	-0.14
155	SLD 5	2	549	1950	-15.87	2.06	-0.07
155	SLD 6	2	549	1950	-15.87	2.06	-0.07
155	SLD 7	0	281	2210	-2.69	0.57	0
155	SLD 8	0	281	2210	-2.69	0.57	0
155	SLD 9	0	540	1914	-15.56	-0.11	0.03
155	SLD 10	0	540	1914	-15.56	-0.11	0.03
155	SLD 11	-2	272	2175	-2.38	-1.6	0.1
155	SLD 12	-2	272	2175	-2.38	-1.6	0.1
155	SLD 13	-3	435	1964	-10.58	-3.17	0.17
155	SLD 14	-3	435	1964	-10.58	-3.17	0.17
155	SLD 15	-4	355	2042	-6.63	-3.62	0.2
155	SLD 16	-4	355	2042	-6.63	-3.62	0.2
155	SLV 1	8	540	2107	-14.96	9.24	-0.41
155	SLV 2	8	540	2107	-14.96	9.24	-0.41
155	SLV 3	7	351	2296	-5.7	8.19	-0.36
155	SLV 4	7	351	2296	-5.7	8.19	-0.36
155	SLV 5	5	735	1789	-24.92	4.53	-0.19
155	SLV 6	5	735	1789	-24.92	4.53	-0.19
155	SLV 7	0	107	2419	5.95	1.02	-0.02
155	SLV 8	0	107	2419	5.95	1.02	-0.02
155	SLV 9	0	714	1705	-24.19	-0.56	0.05
155	SLV 10	0	714	1705	-24.19	-0.56	0.05
155	SLV 11	-5	85	2336	6.67	-4.07	0.22
155	SLV 12	-5	85	2336	6.67	-4.07	0.22
155	SLV 13	-7	469	1829	-12.54	-7.73	0.39
155	SLV 14	-7	469	1829	-12.54	-7.73	0.39
155	SLV 15	-8	281	2018	-3.28	-8.78	0.44
155	SLV 16	-8	281	2018	-3.28	-8.78	0.44
156	SLU 1	-1	-321	6357	20.59	3.24	0.16
156	SLU 2	-1	-442	6487	25.78	3.46	0.17
156	SLU 3	-1	-328	6559	21.17	3.28	0.17
156	SLU 4	-1	-401	6637	24.28	3.42	0.17
156	SLU 5	-1	-447	6617	26.18	3.5	0.17
156	SLU 6	-1	-333	6690	21.57	3.31	0.17
156	SLU 7	-1	-406	6767	24.68	3.45	0.17
156	SLU 8	-1	-332	6618	21.4	3.3	0.17
156	SLU 9	-1	-404	6696	24.51	3.44	0.17
156	SLU 10	1	-472	7541	28.46	5.36	0.23
156	SLU 11	1	-357	7613	23.85	5.18	0.23
156	SLU 12	1	-430	7691	26.96	5.31	0.23
156	SLU 13	1	-477	7671	28.86	5.39	0.23
156	SLU 14	0	-363	7744	24.25	5.21	0.23
156	SLU 15	1	-436	7821	27.36	5.34	0.23
156	SLU 16	0	-361	7672	24.08	5.2	0.23
156	SLU 17	1	-434	7750	27.19	5.33	0.23
156	SLU 18	1	-363	7863	24.42	5.94	0.25
156	SLU 19	2	-436	7941	27.53	6.08	0.25
156	SLU 20	1	-368	7994	24.82	5.98	0.25
156	SLU 21	1	-441	8071	27.93	6.11	0.26

Nodo	Cont.	Reazione a traslazione			Reazione a rotazione		
Ind.	N.br.	x	y	z	x	y	z
156	SLU 22	-1	-336	7290	22.59	3.86	0.19
156	SLU 23	-1	-458	7420	27.78	4.08	0.2
156	SLU 24	-1	-343	7492	23.17	3.9	0.19
156	SLU 25	-1	-416	7570	26.28	4.03	0.2
156	SLU 26	-1	-463	7550	28.18	4.11	0.2
156	SLU 27	-1	-349	7622	23.57	3.93	0.2
156	SLU 28	-1	-422	7700	26.68	4.07	0.2
156	SLU 29	-1	-347	7551	23.4	3.92	0.2
156	SLU 30	-1	-420	7629	26.51	4.05	0.2
156	SLU 31	1	-487	8474	30.46	5.97	0.26
156	SLU 32	1	-373	8546	25.85	5.79	0.26
156	SLU 33	1	-446	8624	28.96	5.93	0.26
156	SLU 34	1	-492	8604	30.86	6.01	0.26
156	SLU 35	0	-378	8676	26.25	5.83	0.26
156	SLU 36	1	-451	8754	29.36	5.96	0.26
156	SLU 37	0	-377	8605	26.08	5.81	0.26
156	SLU 38	1	-449	8683	29.19	5.95	0.26
156	SLU 39	1	-378	8796	26.42	6.56	0.28
156	SLU 40	2	-451	8874	29.53	6.7	0.28
156	SLU 41	1	-384	8926	26.83	6.59	0.28
156	SLU 42	1	-457	9004	29.94	6.73	0.29
156	SLU 43	-1	-412	7945	26.09	4	0.2
156	SLU 44	-1	-533	8074	31.27	4.22	0.21
156	SLU 45	-1	-419	8146	26.66	4.04	0.2
156	SLU 46	-1	-492	8224	29.77	4.18	0.21
156	SLU 47	-1	-538	8205	31.67	4.26	0.21
156	SLU 48	-1	-424	8277	27.06	4.07	0.21
156	SLU 49	-1	-497	8355	30.17	4.21	0.21
156	SLU 50	-1	-423	8206	26.89	4.06	0.21
156	SLU 51	-1	-495	8283	30	4.2	0.21
156	SLU 52	1	-562	9128	33.95	6.12	0.27
156	SLU 53	0	-448	9200	29.34	5.94	0.27
156	SLU 54	0	-521	9278	32.45	6.07	0.27
156	SLU 55	1	-568	9259	34.35	6.15	0.27
156	SLU 56	0	-454	9331	29.74	5.97	0.27
156	SLU 57	0	-526	9409	32.85	6.1	0.27
156	SLU 58	0	-452	9260	29.57	5.96	0.27
156	SLU 59	0	-525	9337	32.68	6.09	0.27
156	SLU 60	1	-454	9450	29.91	6.71	0.29
156	SLU 61	1	-527	9528	33.02	6.84	0.29
156	SLU 62	1	-459	9581	30.32	6.74	0.29
156	SLU 63	1	-532	9659	33.43	6.87	0.29
156	SLU 64	-1	-427	8877	28.09	4.62	0.23
156	SLU 65	-1	-548	9007	33.27	4.84	0.23
156	SLU 66	-1	-434	9079	28.66	4.66	0.23
156	SLU 67	-1	-507	9157	31.77	4.79	0.24
156	SLU 68	-1	-554	9137	33.67	4.87	0.24
156	SLU 69	-1	-440	9210	29.07	4.69	0.24
156	SLU 70	-1	-512	9287	32.18	4.83	0.24
156	SLU 71	-1	-438	9138	28.9	4.68	0.23
156	SLU 72	-1	-511	9216	32.01	4.81	0.24
156	SLU 73	1	-578	10061	35.95	6.73	0.3
156	SLU 74	0	-464	10133	31.34	6.55	0.3
156	SLU 75	0	-537	10211	34.45	6.69	0.3
156	SLU 76	1	-583	10192	36.35	6.77	0.3
156	SLU 77	0	-469	10264	31.74	6.59	0.3
156	SLU 78	0	-542	10342	34.85	6.72	0.3
156	SLU 79	0	-468	10192	31.57	6.57	0.3
156	SLU 80	0	-540	10270	34.68	6.71	0.3
156	SLU 81	1	-469	10383	31.91	7.32	0.32
156	SLU 82	1	-542	10461	35.02	7.46	0.32
156	SLU 83	1	-475	10514	32.32	7.35	0.32
156	SLU 84	1	-548	10591	35.43	7.49	0.32
156	SLE RA 1	-1	-325	6624	21.17	3.41	0.17
156	SLE RA 2	-1	-406	6710	24.62	3.56	0.17
156	SLE RA 3	-1	-330	6758	21.55	3.44	0.17
156	SLE RA 4	-1	-378	6810	23.62	3.53	0.17
156	SLE RA 5	-1	-410	6797	24.89	3.59	0.17
156	SLE RA 6	-1	-334	6845	21.82	3.47	0.17
156	SLE RA 7	-1	-382	6897	23.89	3.56	0.18
156	SLE RA 8	-1	-332	6798	21.7	3.46	0.17
156	SLE RA 9	-1	-381	6850	23.78	3.55	0.18
156	SLE RA 10	0	-426	7413	26.41	4.83	0.21
156	SLE RA 11	0	-350	7461	23.33	4.71	0.21
156	SLE RA 12	0	-398	7513	25.41	4.8	0.22
156	SLE RA 13	0	-429	7500	26.68	4.85	0.22
156	SLE RA 14	0	-353	7548	23.6	4.73	0.22
156	SLE RA 15	0	-402	7600	25.68	4.82	0.22
156	SLE RA 16	0	-352	7500	23.49	4.72	0.22
156	SLE RA 17	0	-401	7552	25.56	4.81	0.22
156	SLE RA 18	1	-353	7628	23.72	5.22	0.23
156	SLE RA 19	1	-402	7679	25.79	5.31	0.23
156	SLE RA 20	1	-357	7715	23.99	5.24	0.23
156	SLE RA 21	1	-405	7766	26.06	5.33	0.23
156	SLE FR 1	-1	-325	6624	21.17	3.41	0.17
156	SLE FR 2	-1	-341	6641	21.86	3.44	0.17
156	SLE FR 3	-1	-327	6659	21.27	3.42	0.17
156	SLE FR 4	0	-350	6942	22.62	3.99	0.19
156	SLE FR 5	0	-335	6960	22.04	3.96	0.19
156	SLE FR 6	0	-339	7126	22.44	4.32	0.2

Nodo	Cont.	Reazione a traslazione			Reazione a rotazione		
Ind.	N.br.	x	y	z	x	y	z
156	SLE QP 1	-1	-325	6624	21.17	3.41	0.17
156	SLE QP 2	0	-334	6925	21.93	3.96	0.19
156	SLD 1	6	-297	6114	19.31	12.7	0.4
156	SLD 2	6	-297	6114	19.31	12.7	0.4
156	SLD 3	11	-733	6601	38.25	15.23	0.44
156	SLD 4	11	-733	6601	38.25	15.23	0.44
156	SLD 5	-6	338	5943	-7.58	2.74	0.19
156	SLD 6	-6	338	5943	-7.58	2.74	0.19
156	SLD 7	10	-1114	7566	55.55	11.18	0.32
156	SLD 8	10	-1114	7566	55.55	11.18	0.32
156	SLD 9	-11	447	6283	-11.69	-3.27	0.05
156	SLD 10	-11	447	6283	-11.69	-3.27	0.05
156	SLD 11	5	-1005	7907	51.44	5.18	0.18
156	SLD 12	5	-1005	7907	51.44	5.18	0.18
156	SLD 13	-12	65	7248	5.62	-7.32	-0.06
156	SLD 14	-12	65	7248	5.62	-7.32	-0.06
156	SLD 15	-7	-370	7735	24.56	-4.79	-0.02
156	SLD 16	-7	-370	7735	24.56	-4.79	-0.02
156	SLV 1	16	-247	5018	15.77	24.4	0.68
156	SLV 2	16	-247	5018	15.77	24.4	0.68
156	SLV 3	27	-1271	6175	60.29	30.42	0.77
156	SLV 4	27	-1271	6175	60.29	30.42	0.77
156	SLV 5	-13	1245	4599	-47.44	0.96	0.19
156	SLV 6	-13	1245	4599	-47.44	0.96	0.19
156	SLV 7	25	-2167	8453	100.96	21.02	0.51
156	SLV 8	25	-2167	8453	100.96	21.02	0.51
156	SLV 9	-26	1500	5396	-57.1	-13.11	-0.13
156	SLV 10	-26	1500	5396	-57.1	-13.11	-0.13
156	SLV 11	12	-1912	9250	91.3	6.95	0.18
156	SLV 12	12	-1912	9250	91.3	6.95	0.18
156	SLV 13	-28	604	7675	-16.43	-22.51	-0.4
156	SLV 14	-28	604	7675	-16.43	-22.51	-0.4
156	SLV 15	-16	-420	8831	28.09	-16.49	-0.31
156	SLV 16	-16	-420	8831	28.09	-16.49	-0.31
157	SLU 1	7	262	7215	-6.32	7.39	-0.06
157	SLU 2	7	360	7121	-9.69	6.95	-0.06
157	SLU 3	8	279	7449	-6.66	7.66	-0.07
157	SLU 4	8	337	7392	-8.69	7.4	-0.06
157	SLU 5	8	374	7279	-9.96	7.13	-0.06
157	SLU 6	8	292	7607	-6.93	7.84	-0.07
157	SLU 7	8	351	7550	-8.96	7.58	-0.07
157	SLU 8	8	290	7531	-6.86	7.75	-0.07
157	SLU 9	8	348	7475	-8.88	7.48	-0.06
157	SLU 10	9	419	8079	-11.19	8.15	-0.07
157	SLU 11	9	338	8407	-8.16	8.86	-0.08
157	SLU 12	9	396	8350	-10.19	8.6	-0.08
157	SLU 13	9	433	8237	-11.46	8.33	-0.07
157	SLU 14	9	351	8565	-8.43	9.04	-0.08
157	SLU 15	10	410	8508	-10.46	8.78	-0.08
157	SLU 16	9	349	8489	-8.36	8.95	-0.08
157	SLU 17	9	407	8432	-10.38	8.68	-0.08
157	SLU 18	9	347	8584	-8.46	9.11	-0.08
157	SLU 19	10	405	8527	-10.49	8.84	-0.08
157	SLU 20	10	360	8742	-8.73	9.28	-0.08
157	SLU 21	10	419	8685	-10.76	9.02	-0.08
157	SLU 22	9	317	8142	-7.67	8.53	-0.07
157	SLU 23	9	415	8047	-11.04	8.09	-0.07
157	SLU 24	9	334	8375	-8.02	8.8	-0.08
157	SLU 25	9	392	8318	-10.04	8.53	-0.07
157	SLU 26	9	429	8205	-11.31	8.27	-0.07
157	SLU 27	9	347	8533	-8.29	8.98	-0.08
157	SLU 28	9	406	8476	-10.31	8.71	-0.08
157	SLU 29	9	345	8458	-8.21	8.89	-0.08
157	SLU 30	9	403	8401	-10.24	8.62	-0.08
157	SLU 31	10	474	9005	-12.54	9.29	-0.08
157	SLU 32	11	393	9333	-9.52	10	-0.09
157	SLU 33	11	451	9276	-11.54	9.73	-0.09
157	SLU 34	11	488	9163	-12.81	9.47	-0.08
157	SLU 35	11	406	9491	-9.79	10.18	-0.09
157	SLU 36	11	465	9434	-11.81	9.91	-0.09
157	SLU 37	11	404	9416	-9.71	10.09	-0.09
157	SLU 38	11	462	9359	-11.74	9.82	-0.09
157	SLU 39	11	402	9511	-9.82	10.24	-0.09
157	SLU 40	11	460	9454	-11.84	9.98	-0.09
157	SLU 41	11	415	9669	-10.09	10.42	-0.09
157	SLU 42	11	474	9612	-12.11	10.16	-0.09
157	SLU 43	9	322	9062	-7.75	9.22	-0.08
157	SLU 44	9	420	8967	-11.13	8.78	-0.07
157	SLU 45	9	338	9295	-8.1	9.49	-0.08
157	SLU 46	9	397	9239	-10.12	9.23	-0.08
157	SLU 47	9	433	9125	-11.39	8.96	-0.08
157	SLU 48	9	352	9453	-8.37	9.67	-0.08
157	SLU 49	10	411	9397	-10.39	9.4	-0.08
157	SLU 50	9	350	9378	-8.29	9.58	-0.08
157	SLU 51	9	408	9321	-10.32	9.31	-0.08
157	SLU 52	11	479	9925	-12.62	9.98	-0.09
157	SLU 53	11	397	10253	-9.6	10.69	-0.09
157	SLU 54	11	456	10197	-11.62	10.43	-0.09
157	SLU 55	11	492	10083	-12.89	10.16	-0.09
157	SLU 56	11	411	10411	-9.87	10.87	-0.09

Nodo	Cont.	Reazione a traslazione			Reazione a rotazione		
Ind.	N.br.	x	y	z	x	y	z
157	SLU 57	11	470	10355	-11.89	10.6	-0.09
157	SLU 58	11	409	10336	-9.79	10.78	-0.09
157	SLU 59	11	467	10279	-11.82	10.51	-0.09
157	SLU 60	11	406	10431	-9.9	10.93	-0.09
157	SLU 61	11	465	10374	-11.92	10.67	-0.09
157	SLU 62	11	420	10589	-10.17	11.11	-0.1
157	SLU 63	12	479	10532	-12.19	10.85	-0.09
157	SLU 64	10	377	9989	-9.11	10.36	-0.09
157	SLU 65	10	475	9894	-12.48	9.92	-0.09
157	SLU 66	11	393	10222	-9.45	10.63	-0.09
157	SLU 67	11	452	10165	-11.47	10.36	-0.09
157	SLU 68	11	488	10052	-12.75	10.1	-0.09
157	SLU 69	11	407	10380	-9.72	10.8	-0.09
157	SLU 70	11	466	10323	-11.74	10.54	-0.09
157	SLU 71	11	405	10305	-9.65	10.71	-0.09
157	SLU 72	11	463	10248	-11.67	10.45	-0.09
157	SLU 73	12	534	10852	-13.98	11.12	-0.1
157	SLU 74	12	452	11180	-10.95	11.83	-0.1
157	SLU 75	12	511	11123	-12.97	11.56	-0.1
157	SLU 76	12	547	11010	-14.25	11.3	-0.1
157	SLU 77	13	466	11338	-11.22	12	-0.1
157	SLU 78	13	525	11281	-13.24	11.74	-0.1
157	SLU 79	12	464	11263	-11.15	11.91	-0.1
157	SLU 80	13	522	11206	-13.17	11.65	-0.1
157	SLU 81	13	461	11357	-11.25	12.07	-0.1
157	SLU 82	13	520	11301	-13.27	11.81	-0.1
157	SLU 83	13	475	11515	-11.52	12.25	-0.11
157	SLU 84	13	534	11459	-13.54	11.99	-0.11
157	SLE RA 1	8	278	7480	-6.71	7.72	-0.07
157	SLE RA 2	8	343	7417	-8.96	7.42	-0.06
157	SLE RA 3	8	289	7636	-6.94	7.9	-0.07
157	SLE RA 4	8	328	7598	-8.28	7.72	-0.07
157	SLE RA 5	8	352	7522	-9.13	7.54	-0.07
157	SLE RA 6	8	298	7741	-7.12	8.02	-0.07
157	SLE RA 7	8	337	7703	-8.46	7.84	-0.07
157	SLE RA 8	8	296	7691	-7.07	7.95	-0.07
157	SLE RA 9	8	335	7653	-8.42	7.78	-0.07
157	SLE RA 10	9	382	8056	-9.95	8.22	-0.07
157	SLE RA 11	9	328	8274	-7.94	8.7	-0.07
157	SLE RA 12	9	367	8236	-9.28	8.52	-0.07
157	SLE RA 13	9	392	8161	-10.13	8.34	-0.07
157	SLE RA 14	9	337	8380	-8.12	8.82	-0.08
157	SLE RA 15	9	376	8342	-9.46	8.64	-0.08
157	SLE RA 16	9	336	8329	-8.07	8.75	-0.08
157	SLE RA 17	9	375	8292	-9.42	8.58	-0.07
157	SLE RA 18	9	334	8392	-8.14	8.86	-0.08
157	SLE RA 19	9	373	8355	-9.48	8.68	-0.08
157	SLE RA 20	9	343	8498	-8.32	8.98	-0.08
157	SLE RA 21	9	382	8460	-9.66	8.8	-0.08
157	SLE FR 1	8	278	7480	-6.71	7.72	-0.07
157	SLE FR 2	8	291	7467	-7.16	7.66	-0.07
157	SLE FR 3	8	282	7522	-6.78	7.76	-0.07
157	SLE FR 4	8	308	7741	-7.59	8	-0.07
157	SLE FR 5	8	298	7796	-7.21	8.11	-0.07
157	SLE FR 6	8	306	7936	-7.42	8.29	-0.07
157	SLE QP 1	8	278	7480	-6.71	7.72	-0.07
157	SLE QP 2	8	295	7754	-7.14	8.06	-0.07
157	SLD 1	22	676	9729	-18.87	13.72	-0.1
157	SLD 2	22	676	9729	-18.87	13.72	-0.1
157	SLD 3	15	291	9544	-5.69	10.88	-0.1
157	SLD 4	15	291	9544	-5.69	10.88	-0.1
157	SLD 5	22	993	8628	-30.63	14.07	-0.07
157	SLD 6	22	993	8628	-30.63	14.07	-0.07
157	SLD 7	0	-291	8009	13.28	4.6	-0.08
157	SLD 8	0	-291	8009	13.28	4.6	-0.08
157	SLD 9	16	880	7498	-27.55	11.52	-0.06
157	SLD 10	16	880	7498	-27.55	11.52	-0.06
157	SLD 11	-6	-404	6880	16.36	2.05	-0.06
157	SLD 12	-6	-404	6880	16.36	2.05	-0.06
157	SLD 13	1	299	5964	-8.58	5.24	-0.04
157	SLD 14	1	299	5964	-8.58	5.24	-0.04
157	SLD 15	-5	-86	5779	4.6	2.4	-0.04
157	SLD 16	-5	-86	5779	4.6	2.4	-0.04
157	SLV 1	40	1188	12389	-34.67	21.55	-0.13
157	SLV 2	40	1188	12389	-34.67	21.55	-0.13
157	SLV 3	23	286	11933	-3.83	14.4	-0.14
157	SLV 4	23	286	11933	-3.83	14.4	-0.14
157	SLV 5	44	1931	9835	-62.16	22.96	-0.08
157	SLV 6	44	1931	9835	-62.16	22.96	-0.08
157	SLV 7	-13	-1076	8317	40.62	-0.89	-0.1
157	SLV 8	-13	-1076	8317	40.62	-0.89	-0.1
157	SLV 9	29	1666	7191	-54.9	17.01	-0.04
157	SLV 10	29	1666	7191	-54.9	17.01	-0.04
157	SLV 11	-28	-1341	5672	47.89	-6.84	-0.06
157	SLV 12	-28	-1341	5672	47.89	-6.84	-0.06
157	SLV 13	-7	304	3575	-10.44	1.72	0
157	SLV 14	-7	304	3575	-10.44	1.72	0
157	SLV 15	-24	-599	3119	20.4	-5.43	0
157	SLV 16	-24	-599	3119	20.4	-5.43	0
158	SLU 1	9	-538	3938	35.69	3.48	-0.05

Nodo	Cont.	Reazione a traslazione			Reazione a rotazione		
Ind.	N.br.	x	y	z	x	y	z
158	SLU 2	9	-308	3667	26.36	3.46	-0.05
158	SLU 3	9	-552	4075	37	3.63	-0.05
158	SLU 4	9	-414	3912	31.4	3.61	-0.06
158	SLU 5	9	-315	3762	27.19	3.56	-0.05
158	SLU 6	9	-560	4170	37.84	3.73	-0.06
158	SLU 7	9	-421	4007	32.24	3.71	-0.06
158	SLU 8	9	-553	4129	37.37	3.68	-0.06
158	SLU 9	9	-415	3966	31.76	3.67	-0.06
158	SLU 10	10	-373	4336	31.59	4.06	-0.06
158	SLU 11	11	-618	4744	42.24	4.23	-0.06
158	SLU 12	11	-479	4581	36.64	4.22	-0.06
158	SLU 13	10	-380	4431	32.43	4.16	-0.06
158	SLU 14	11	-625	4839	43.08	4.33	-0.07
158	SLU 15	11	-487	4676	37.48	4.31	-0.07
158	SLU 16	11	-618	4798	42.61	4.28	-0.06
158	SLU 17	11	-480	4635	37	4.27	-0.07
158	SLU 18	11	-632	4894	43.18	4.34	-0.07
158	SLU 19	11	-493	4731	37.57	4.33	-0.07
158	SLU 20	11	-639	4989	44.01	4.44	-0.07
158	SLU 21	11	-501	4826	38.41	4.43	-0.07
158	SLU 22	10	-604	4555	40.93	4.06	-0.06
158	SLU 23	10	-373	4284	31.59	4.04	-0.06
158	SLU 24	11	-618	4692	42.24	4.2	-0.06
158	SLU 25	11	-480	4529	36.63	4.19	-0.06
158	SLU 26	10	-381	4379	32.42	4.13	-0.06
158	SLU 27	11	-625	4787	43.07	4.3	-0.07
158	SLU 28	11	-487	4624	37.47	4.29	-0.07
158	SLU 29	11	-619	4746	42.6	4.26	-0.06
158	SLU 30	11	-480	4583	37	4.24	-0.07
158	SLU 31	12	-439	4953	36.83	4.64	-0.07
158	SLU 32	12	-683	5361	47.47	4.8	-0.07
158	SLU 33	12	-545	5198	41.87	4.79	-0.07
158	SLU 34	12	-446	5048	37.66	4.73	-0.07
158	SLU 35	13	-691	5456	48.31	4.9	-0.07
158	SLU 36	12	-552	5293	42.71	4.89	-0.07
158	SLU 37	12	-684	5415	47.84	4.86	-0.07
158	SLU 38	12	-546	5252	42.23	4.84	-0.07
158	SLU 39	12	-697	5511	48.41	4.92	-0.07
158	SLU 40	12	-559	5348	42.81	4.9	-0.07
158	SLU 41	13	-705	5606	49.25	5.02	-0.08
158	SLU 42	13	-566	5443	43.64	5	-0.08
158	SLU 43	11	-677	4908	44.61	4.33	-0.07
158	SLU 44	11	-446	4637	35.27	4.31	-0.07
158	SLU 45	11	-691	5045	45.92	4.48	-0.07
158	SLU 46	11	-553	4882	40.32	4.46	-0.07
158	SLU 47	11	-454	4732	36.11	4.41	-0.07
158	SLU 48	12	-699	5140	46.75	4.58	-0.07
158	SLU 49	11	-560	4977	41.15	4.56	-0.07
158	SLU 50	11	-692	5099	46.28	4.53	-0.07
158	SLU 51	11	-554	4936	40.68	4.52	-0.07
158	SLU 52	12	-512	5306	40.51	4.91	-0.08
158	SLU 53	13	-757	5714	51.16	5.08	-0.08
158	SLU 54	13	-618	5551	45.55	5.06	-0.08
158	SLU 55	13	-519	5401	41.35	5.01	-0.08
158	SLU 56	13	-764	5809	51.99	5.18	-0.08
158	SLU 57	13	-626	5646	46.39	5.16	-0.08
158	SLU 58	13	-757	5767	51.52	5.13	-0.08
158	SLU 59	13	-619	5605	45.92	5.12	-0.08
158	SLU 60	13	-770	5863	52.09	5.19	-0.08
158	SLU 61	13	-632	5701	46.49	5.18	-0.08
158	SLU 62	13	-778	5959	52.93	5.29	-0.08
158	SLU 63	13	-639	5796	47.33	5.28	-0.08
158	SLU 64	12	-743	5525	49.84	4.91	-0.07
158	SLU 65	12	-512	5254	40.5	4.88	-0.07
158	SLU 66	13	-757	5662	51.15	5.05	-0.08
158	SLU 67	13	-619	5499	45.55	5.04	-0.08
158	SLU 68	13	-520	5349	41.34	4.98	-0.08
158	SLU 69	13	-764	5757	51.99	5.15	-0.08
158	SLU 70	13	-626	5594	46.38	5.14	-0.08
158	SLU 71	13	-758	5716	51.51	5.1	-0.08
158	SLU 72	13	-619	5553	45.91	5.09	-0.08
158	SLU 73	14	-578	5923	45.74	5.48	-0.08
158	SLU 74	14	-822	6331	56.39	5.65	-0.09
158	SLU 75	14	-684	6168	50.79	5.64	-0.09
158	SLU 76	14	-585	6018	46.58	5.58	-0.09
158	SLU 77	15	-830	6426	57.23	5.75	-0.09
158	SLU 78	15	-691	6263	51.62	5.74	-0.09
158	SLU 79	15	-823	6384	56.75	5.7	-0.09
158	SLU 80	14	-685	6222	51.15	5.69	-0.09
158	SLU 81	15	-836	6480	57.32	5.77	-0.09
158	SLU 82	15	-698	6318	51.72	5.75	-0.09
158	SLU 83	15	-844	6576	58.16	5.86	-0.09
158	SLU 84	15	-705	6413	52.56	5.85	-0.09
158	SLE RA 1	9	-557	4114	37.19	3.65	-0.06
158	SLE RA 2	9	-403	3934	30.96	3.63	-0.06
158	SLE RA 3	9	-566	4206	38.06	3.74	-0.06
158	SLE RA 4	9	-474	4097	34.33	3.74	-0.06
158	SLE RA 5	9	-408	3997	31.52	3.7	-0.06
158	SLE RA 6	10	-571	4269	38.62	3.81	-0.06
158	SLE RA 7	10	-479	4161	34.88	3.8	-0.06

Nodo	Cont.	Reazione a traslazione			Reazione a rotazione		
Ind.	N.br.	x	y	z	x	y	z
158	SLE RA 8	10	-567	4242	38.3	3.78	-0.06
158	SLE RA 9	10	-475	4133	34.57	3.77	-0.06
158	SLE RA 10	10	-447	4379	34.46	4.03	-0.06
158	SLE RA 11	11	-610	4651	41.55	4.15	-0.06
158	SLE RA 12	10	-518	4543	37.82	4.14	-0.06
158	SLE RA 13	10	-452	4443	35.01	4.1	-0.06
158	SLE RA 14	11	-615	4715	42.11	4.21	-0.06
158	SLE RA 15	11	-523	4606	38.38	4.2	-0.06
158	SLE RA 16	11	-610	4687	41.8	4.18	-0.06
158	SLE RA 17	11	-518	4579	38.06	4.17	-0.06
158	SLE RA 18	11	-619	4751	42.18	4.22	-0.06
158	SLE RA 19	11	-527	4643	38.44	4.21	-0.06
158	SLE RA 20	11	-624	4815	42.74	4.29	-0.06
158	SLE RA 21	11	-532	4706	39	4.28	-0.07
158	SLE FR 1	9	-557	4114	37.19	3.65	-0.06
158	SLE FR 2	9	-526	4078	35.94	3.64	-0.06
158	SLE FR 3	9	-559	4140	37.41	3.67	-0.06
158	SLE FR 4	10	-545	4269	37.44	3.82	-0.06
158	SLE FR 5	10	-578	4331	38.91	3.85	-0.06
158	SLE FR 6	10	-588	4433	39.68	3.93	-0.06
158	SLE QP 1	9	-557	4114	37.19	3.65	-0.06
158	SLE QP 2	10	-576	4306	38.69	3.82	-0.06
158	SLD 1	14	-202	4872	38.42	6.04	-0.08
158	SLD 2	14	-202	4872	38.42	6.04	-0.08
158	SLD 3	9	-566	5251	53.18	4.73	-0.06
158	SLD 4	9	-566	5251	53.18	4.73	-0.06
158	SLD 5	19	88	3901	16.23	6.46	-0.09
158	SLD 6	19	88	3901	16.23	6.46	-0.09
158	SLD 7	1	-1124	5164	65.41	2.11	-0.03
158	SLD 8	1	-1124	5164	65.41	2.11	-0.03
158	SLD 9	18	-27	3447	11.96	5.53	-0.08
158	SLD 10	18	-27	3447	11.96	5.53	-0.08
158	SLD 11	0	-1239	4710	61.14	1.18	-0.02
158	SLD 12	0	-1239	4710	61.14	1.18	-0.02
158	SLD 13	10	-586	3360	24.19	2.91	-0.05
158	SLD 14	10	-586	3360	24.19	2.91	-0.05
158	SLD 15	5	-949	3739	38.95	1.6	-0.04
158	SLD 16	5	-949	3739	38.95	1.6	-0.04
158	SLV 1	21	319	5616	37.68	9.02	-0.11
158	SLV 2	21	319	5616	37.68	9.02	-0.11
158	SLV 3	8	-562	6543	73.55	5.95	-0.07
158	SLV 4	8	-562	6543	73.55	5.95	-0.07
158	SLV 5	32	1029	3293	-16.02	10.04	-0.14
158	SLV 6	32	1029	3293	-16.02	10.04	-0.14
158	SLV 7	-10	-1908	6382	103.55	-0.2	0.01
158	SLV 8	-10	-1908	6382	103.55	-0.2	0.01
158	SLV 9	29	757	2229	-26.18	7.84	-0.12
158	SLV 10	29	757	2229	-26.18	7.84	-0.12
158	SLV 11	-12	-2181	5318	93.39	-2.4	0.02
158	SLV 12	-12	-2181	5318	93.39	-2.4	0.02
158	SLV 13	11	-590	2068	3.83	1.69	-0.05
158	SLV 14	11	-590	2068	3.83	1.69	-0.05
158	SLV 15	-1	-1471	2995	39.7	-1.38	-0.01
158	SLV 16	-1	-1471	2995	39.7	-1.38	-0.01
159	SLU 1	19	-1441	5869	79.8	4.77	-0.09
159	SLU 2	19	-1566	6107	84.89	4.83	-0.08
159	SLU 3	20	-1489	6075	82.86	5.01	-0.09
159	SLU 4	20	-1564	6217	85.91	5.04	-0.09
159	SLU 5	20	-1597	6252	86.96	5.01	-0.09
159	SLU 6	21	-1521	6220	84.92	5.19	-0.09
159	SLU 7	21	-1595	6363	87.98	5.22	-0.09
159	SLU 8	20	-1504	6161	83.93	5.13	-0.09
159	SLU 9	20	-1579	6303	86.99	5.17	-0.09
159	SLU 10	22	-1796	7082	98.18	5	-0.09
159	SLU 11	23	-1719	7050	96.14	5.18	-0.1
159	SLU 12	23	-1794	7192	99.2	5.21	-0.1
159	SLU 13	22	-1827	7228	100.24	5.18	-0.1
159	SLU 14	23	-1750	7195	98.2	5.36	-0.1
159	SLU 15	23	-1825	7338	101.26	5.4	-0.1
159	SLU 16	23	-1734	7136	97.21	5.3	-0.1
159	SLU 17	23	-1809	7278	100.27	5.34	-0.1
159	SLU 18	23	-1770	7262	98.77	5.02	-0.1
159	SLU 19	23	-1845	7405	101.83	5.05	-0.1
159	SLU 20	24	-1801	7408	100.84	5.2	-0.1
159	SLU 21	23	-1876	7550	103.9	5.23	-0.1
159	SLU 22	22	-1632	6704	91.45	5.46	-0.1
159	SLU 23	22	-1757	6942	96.55	5.51	-0.1
159	SLU 24	23	-1680	6910	94.51	5.7	-0.1
159	SLU 25	23	-1755	7052	97.57	5.73	-0.1
159	SLU 26	23	-1788	7087	98.61	5.69	-0.1
159	SLU 27	24	-1711	7055	96.57	5.88	-0.11
159	SLU 28	24	-1786	7198	99.63	5.91	-0.11
159	SLU 29	24	-1694	6996	95.58	5.82	-0.11
159	SLU 30	24	-1769	7138	98.64	5.85	-0.11
159	SLU 31	25	-1987	7917	109.83	5.68	-0.11
159	SLU 32	26	-1910	7885	107.79	5.87	-0.11
159	SLU 33	26	-1985	8027	110.85	5.9	-0.11
159	SLU 34	26	-2018	8063	111.9	5.86	-0.11
159	SLU 35	27	-1941	8030	109.86	6.05	-0.12
159	SLU 36	26	-2016	8173	112.91	6.08	-0.12

Nodo	Cont.	Reazione a traslazione			Reazione a rotazione		
Ind.	N.br.	x	y	z	x	y	z
159	SLU 37	26	-1924	7971	108.87	5.99	-0.12
159	SLU 38	26	-1999	8113	111.92	6.02	-0.12
159	SLU 39	26	-1960	8097	110.43	5.7	-0.11
159	SLU 40	26	-2035	8240	113.49	5.73	-0.11
159	SLU 41	27	-1992	8243	112.49	5.88	-0.12
159	SLU 42	27	-2067	8385	115.55	5.91	-0.12
159	SLU 43	24	-1808	7344	99.74	5.97	-0.11
159	SLU 44	24	-1933	7581	104.84	6.02	-0.1
159	SLU 45	25	-1856	7549	102.8	6.21	-0.11
159	SLU 46	24	-1931	7691	105.86	6.24	-0.11
159	SLU 47	24	-1964	7727	106.9	6.2	-0.11
159	SLU 48	25	-1887	7695	104.86	6.39	-0.11
159	SLU 49	25	-1962	7837	107.92	6.42	-0.11
159	SLU 50	25	-1871	7635	103.87	6.33	-0.11
159	SLU 51	25	-1946	7778	106.93	6.36	-0.11
159	SLU 52	26	-2163	8556	118.12	6.19	-0.11
159	SLU 53	27	-2086	8524	116.08	6.38	-0.12
159	SLU 54	27	-2161	8667	119.14	6.41	-0.12
159	SLU 55	27	-2194	8702	120.19	6.37	-0.12
159	SLU 56	28	-2117	8670	118.15	6.56	-0.12
159	SLU 57	28	-2192	8812	121.2	6.59	-0.12
159	SLU 58	28	-2101	8610	117.15	6.5	-0.12
159	SLU 59	28	-2175	8753	120.21	6.53	-0.12
159	SLU 60	27	-2137	8737	118.72	6.21	-0.12
159	SLU 61	27	-2212	8879	121.77	6.24	-0.12
159	SLU 62	28	-2168	8883	120.78	6.39	-0.12
159	SLU 63	28	-2243	9025	123.84	6.42	-0.12
159	SLU 64	27	-1999	8179	111.4	6.65	-0.12
159	SLU 65	27	-2124	8416	116.49	6.71	-0.12
159	SLU 66	28	-2047	8384	114.45	6.89	-0.12
159	SLU 67	28	-2122	8526	117.51	6.93	-0.12
159	SLU 68	27	-2155	8562	118.56	6.89	-0.12
159	SLU 69	28	-2078	8530	116.52	7.07	-0.13
159	SLU 70	28	-2153	8672	119.58	7.11	-0.13
159	SLU 71	28	-2061	8470	115.53	7.02	-0.13
159	SLU 72	28	-2136	8613	118.58	7.05	-0.13
159	SLU 73	29	-2354	9391	129.78	6.88	-0.13
159	SLU 74	30	-2277	9359	127.74	7.06	-0.14
159	SLU 75	30	-2352	9502	130.79	7.1	-0.13
159	SLU 76	30	-2385	9537	131.84	7.06	-0.13
159	SLU 77	31	-2308	9505	129.8	7.25	-0.14
159	SLU 78	31	-2383	9647	132.86	7.28	-0.14
159	SLU 79	31	-2291	9445	128.81	7.19	-0.14
159	SLU 80	31	-2366	9588	131.87	7.22	-0.14
159	SLU 81	31	-2327	9572	130.37	6.9	-0.14
159	SLU 82	31	-2402	9714	133.43	6.93	-0.13
159	SLU 83	31	-2359	9718	132.44	7.08	-0.14
159	SLU 84	31	-2433	9860	135.49	7.11	-0.14
159	SLE RA 1	20	-1496	6108	83.13	4.97	-0.09
159	SLE RA 2	20	-1579	6266	86.53	5	-0.09
159	SLE RA 3	21	-1528	6245	85.17	5.13	-0.09
159	SLE RA 4	21	-1578	6340	87.2	5.15	-0.09
159	SLE RA 5	20	-1600	6363	87.9	5.12	-0.09
159	SLE RA 6	21	-1549	6342	86.54	5.25	-0.09
159	SLE RA 7	21	-1598	6437	88.58	5.27	-0.09
159	SLE RA 8	21	-1537	6302	85.88	5.21	-0.09
159	SLE RA 9	21	-1587	6397	87.92	5.23	-0.09
159	SLE RA 10	22	-1732	6916	95.38	5.12	-0.1
159	SLE RA 11	22	-1681	6895	94.02	5.24	-0.1
159	SLE RA 12	22	-1731	6990	96.06	5.26	-0.1
159	SLE RA 13	22	-1753	7013	96.76	5.24	-0.1
159	SLE RA 14	23	-1702	6992	95.4	5.36	-0.1
159	SLE RA 15	23	-1752	7087	97.44	5.38	-0.1
159	SLE RA 16	23	-1691	6952	94.74	5.32	-0.1
159	SLE RA 17	23	-1741	7047	96.77	5.34	-0.1
159	SLE RA 18	22	-1715	7037	95.78	5.13	-0.1
159	SLE RA 19	22	-1765	7132	97.82	5.15	-0.1
159	SLE RA 20	23	-1736	7134	97.16	5.25	-0.1
159	SLE RA 21	23	-1785	7229	99.19	5.27	-0.1
159	SLE FR 1	20	-1496	6108	83.13	4.97	-0.09
159	SLE FR 2	20	-1512	6140	83.81	4.97	-0.09
159	SLE FR 3	20	-1504	6147	83.68	5.02	-0.09
159	SLE FR 4	21	-1578	6418	87.6	5.02	-0.09
159	SLE FR 5	21	-1570	6425	87.47	5.06	-0.09
159	SLE FR 6	21	-1605	6572	89.45	5.05	-0.09
159	SLE QP 1	20	-1496	6108	83.13	4.97	-0.09
159	SLE QP 2	21	-1561	6387	86.92	5.02	-0.09
159	SLD 1	28	-1198	6963	83.48	11.08	-0.15
159	SLD 2	28	-1198	6963	83.48	11.08	-0.15
159	SLD 3	25	-1626	7711	101.21	10.35	-0.14
159	SLD 4	25	-1626	7711	101.21	10.35	-0.14
159	SLD 5	26	-802	5425	58.99	7.94	-0.13
159	SLD 6	26	-802	5425	58.99	7.94	-0.13
159	SLD 7	19	-2231	7918	118.11	5.51	-0.08
159	SLD 8	19	-2231	7918	118.11	5.51	-0.08
159	SLD 9	23	-892	4855	55.74	4.52	-0.1
159	SLD 10	23	-892	4855	55.74	4.52	-0.1
159	SLD 11	15	-2321	7348	114.86	2.1	-0.05
159	SLD 12	15	-2321	7348	114.86	2.1	-0.05
159	SLD 13	16	-1496	5062	72.63	-0.31	-0.05

Nodo	Cont.	Reazione a traslazione			Reazione a rotazione		
Ind.	N.br.	x	y	z	x	y	z
159	SLD 14	16	-1496	5062	72.63	-0.31	-0.05
159	SLD 15	14	-1925	5810	90.37	-1.04	-0.03
159	SLD 16	14	-1925	5810	90.37	-1.04	-0.03
159	SLV 1	37	-703	7730	78.84	19.23	-0.23
159	SLV 2	37	-703	7730	78.84	19.23	-0.23
159	SLV 3	32	-1714	9504	120.75	17.49	-0.2
159	SLV 4	32	-1714	9504	120.75	17.49	-0.2
159	SLV 5	34	230	4099	20.95	11.91	-0.19
159	SLV 6	34	230	4099	20.95	11.91	-0.19
159	SLV 7	16	-3141	10013	160.62	6.12	-0.07
159	SLV 8	16	-3141	10013	160.62	6.12	-0.07
159	SLV 9	26	18	2760	13.23	3.91	-0.11
159	SLV 10	26	18	2760	13.23	3.91	-0.11
159	SLV 11	8	-3352	8674	152.9	-1.88	0
159	SLV 12	8	-3352	8674	152.9	-1.88	0
159	SLV 13	10	-1409	3269	53.1	-7.46	0.01
159	SLV 14	10	-1409	3269	53.1	-7.46	0.01
159	SLV 15	4	-2420	5043	95	-9.19	0.05
159	SLV 16	4	-2420	5043	95	-9.19	0.05
160	SLU 1	-8	-585	4514	3.11	-2.11	0.02
160	SLU 2	-8	-332	4218	-7.24	-2.1	0.02
160	SLU 3	-8	-596	4660	2.52	-2.2	0.02
160	SLU 4	-8	-444	4482	-3.69	-2.19	0.02
160	SLU 5	-8	-336	4309	-7.83	-2.16	0.02
160	SLU 6	-9	-601	4751	1.94	-2.25	0.02
160	SLU 7	-8	-449	4573	-4.28	-2.25	0.02
160	SLU 8	-8	-594	4697	1.95	-2.22	0.02
160	SLU 9	-8	-442	4519	-4.27	-2.22	0.02
160	SLU 10	-9	-396	5011	-8.24	-2.49	0.02
160	SLU 11	-10	-661	5453	1.52	-2.58	0.02
160	SLU 12	-10	-509	5275	-4.69	-2.58	0.02
160	SLU 13	-9	-401	5102	-8.82	-2.54	0.02
160	SLU 14	-10	-665	5544	0.94	-2.64	0.02
160	SLU 15	-10	-513	5367	-5.27	-2.63	0.02
160	SLU 16	-10	-658	5490	0.95	-2.61	0.02
160	SLU 17	-10	-506	5313	-5.26	-2.6	0.02
160	SLU 18	-10	-677	5648	1.69	-2.66	0.02
160	SLU 19	-10	-525	5470	-4.53	-2.66	0.02
160	SLU 20	-10	-681	5739	1.11	-2.72	0.02
160	SLU 21	-10	-529	5561	-5.11	-2.71	0.02
160	SLU 22	-9	-648	5242	2.07	-2.47	0.02
160	SLU 23	-9	-395	4946	-8.29	-2.46	0.02
160	SLU 24	-10	-660	5388	1.47	-2.56	0.02
160	SLU 25	-9	-508	5210	-4.74	-2.55	0.02
160	SLU 26	-9	-400	5037	-8.87	-2.52	0.02
160	SLU 27	-10	-664	5479	0.89	-2.62	0.02
160	SLU 28	-10	-512	5301	-5.32	-2.61	0.02
160	SLU 29	-10	-657	5425	0.9	-2.59	0.02
160	SLU 30	-10	-505	5247	-5.31	-2.58	0.02
160	SLU 31	-10	-460	5739	-9.29	-2.85	0.02
160	SLU 32	-11	-724	6181	0.48	-2.95	0.03
160	SLU 33	-11	-572	6003	-5.74	-2.94	0.03
160	SLU 34	-11	-464	5830	-9.87	-2.91	0.02
160	SLU 35	-11	-728	6272	-0.11	-3	0.03
160	SLU 36	-11	-576	6094	-6.32	-3	0.03
160	SLU 37	-11	-721	6218	-0.1	-2.97	0.03
160	SLU 38	-11	-569	6040	-6.31	-2.97	0.03
160	SLU 39	-11	-740	6375	0.64	-3.02	0.03
160	SLU 40	-11	-588	6197	-5.57	-3.02	0.03
160	SLU 41	-12	-745	6467	0.06	-3.08	0.03
160	SLU 42	-11	-593	6289	-6.16	-3.08	0.03
160	SLU 43	-10	-739	5619	4.41	-2.62	0.02
160	SLU 44	-10	-486	5323	-5.95	-2.61	0.02
160	SLU 45	-10	-750	5765	3.81	-2.71	0.02
160	SLU 46	-10	-598	5587	-2.4	-2.7	0.02
160	SLU 47	-10	-490	5414	-6.53	-2.67	0.02
160	SLU 48	-10	-754	5856	3.23	-2.76	0.02
160	SLU 49	-10	-602	5678	-2.98	-2.76	0.02
160	SLU 50	-10	-747	5802	3.24	-2.73	0.02
160	SLU 51	-10	-595	5624	-2.97	-2.73	0.02
160	SLU 52	-11	-550	6116	-6.95	-3	0.03
160	SLU 53	-12	-814	6558	2.82	-3.09	0.03
160	SLU 54	-11	-662	6380	-3.4	-3.09	0.03
160	SLU 55	-11	-554	6207	-7.53	-3.05	0.03
160	SLU 56	-12	-819	6649	2.23	-3.15	0.03
160	SLU 57	-12	-667	6471	-3.98	-3.14	0.03
160	SLU 58	-12	-812	6595	2.24	-3.12	0.03
160	SLU 59	-12	-660	6417	-3.97	-3.11	0.03
160	SLU 60	-12	-831	6752	2.98	-3.17	0.03
160	SLU 61	-12	-679	6574	-3.23	-3.17	0.03
160	SLU 62	-12	-835	6844	2.4	-3.23	0.03
160	SLU 63	-12	-683	6666	-3.82	-3.22	0.03
160	SLU 64	-11	-802	6347	3.36	-2.98	0.03
160	SLU 65	-11	-549	6050	-7	-2.97	0.03
160	SLU 66	-12	-813	6492	2.77	-3.07	0.03
160	SLU 67	-11	-662	6314	-3.45	-3.06	0.03
160	SLU 68	-11	-553	6142	-7.58	-3.03	0.03
160	SLU 69	-12	-818	6584	2.18	-3.13	0.03
160	SLU 70	-12	-666	6406	-4.03	-3.12	0.03
160	SLU 71	-12	-811	6530	2.19	-3.1	0.03

Nodo	Cont.	Reazione a traslazione			Reazione a rotazione		
Ind.	N.br.	x	y	z	x	y	z
160	SLU 72	-11	-659	6352	-4.02	-3.09	0.03
160	SLU 73	-12	-613	6844	-8	-3.36	0.03
160	SLU 74	-13	-878	7286	1.77	-3.46	0.03
160	SLU 75	-13	-726	7108	-4.45	-3.45	0.03
160	SLU 76	-13	-618	6935	-8.58	-3.42	0.03
160	SLU 77	-13	-882	7377	1.19	-3.51	0.03
160	SLU 78	-13	-730	7199	-5.03	-3.51	0.03
160	SLU 79	-13	-875	7323	1.2	-3.48	0.03
160	SLU 80	-13	-723	7145	-5.02	-3.48	0.03
160	SLU 81	-13	-894	7480	1.93	-3.53	0.03
160	SLU 82	-13	-742	7302	-4.28	-3.53	0.03
160	SLU 83	-14	-898	7572	1.35	-3.59	0.03
160	SLU 84	-13	-747	7394	-4.86	-3.58	0.03
160	SLE RA 1	-8	-603	4722	2.81	-2.21	0.02
160	SLE RA 2	-8	-434	4525	-4.09	-2.21	0.02
160	SLE RA 3	-9	-611	4819	2.42	-2.27	0.02
160	SLE RA 4	-8	-509	4701	-1.72	-2.27	0.02
160	SLE RA 5	-8	-437	4586	-4.48	-2.25	0.02
160	SLE RA 6	-9	-614	4880	2.03	-2.31	0.02
160	SLE RA 7	-9	-512	4762	-2.11	-2.31	0.02
160	SLE RA 8	-9	-609	4844	2.04	-2.29	0.02
160	SLE RA 9	-9	-508	4726	-2.11	-2.29	0.02
160	SLE RA 10	-9	-477	5053	-4.76	-2.47	0.02
160	SLE RA 11	-10	-654	5348	1.75	-2.53	0.02
160	SLE RA 12	-9	-552	5229	-2.39	-2.53	0.02
160	SLE RA 13	-9	-480	5114	-5.14	-2.5	0.02
160	SLE RA 14	-10	-656	5409	1.37	-2.57	0.02
160	SLE RA 15	-10	-555	5290	-2.78	-2.56	0.02
160	SLE RA 16	-10	-652	5373	1.37	-2.55	0.02
160	SLE RA 17	-9	-550	5254	-2.77	-2.54	0.02
160	SLE RA 18	-10	-664	5478	1.86	-2.58	0.02
160	SLE RA 19	-10	-563	5359	-2.28	-2.58	0.02
160	SLE RA 20	-10	-667	5539	1.48	-2.62	0.02
160	SLE RA 21	-10	-566	5420	-2.67	-2.62	0.02
160	SLE FR 1	-8	-603	4722	2.81	-2.21	0.02
160	SLE FR 2	-8	-569	4683	1.43	-2.21	0.02
160	SLE FR 3	-8	-604	4747	2.66	-2.23	0.02
160	SLE FR 4	-9	-588	4909	1.15	-2.32	0.02
160	SLE FR 5	-9	-623	4973	2.37	-2.34	0.02
160	SLE FR 6	-9	-634	5100	2.34	-2.4	0.02
160	SLE QP 1	-8	-603	4722	2.81	-2.21	0.02
160	SLE QP 2	-9	-622	4949	2.53	-2.32	0.02
160	SLD 1	-8	-663	3958	3.18	-1.54	0.01
160	SLD 2	-8	-663	3958	3.18	-1.54	0.01
160	SLD 3	-5	-1026	4336	18.25	-0.66	0.01
160	SLD 4	-5	-1026	4336	18.25	-0.66	0.01
160	SLD 5	-13	-83	4078	-20.14	-3.41	0.01
160	SLD 6	-13	-83	4078	-20.14	-3.41	0.01
160	SLD 7	-3	-1294	5338	30.11	-0.5	0.02
160	SLD 8	-3	-1294	5338	30.11	-0.5	0.02
160	SLD 9	-14	51	4560	-25.05	-4.15	0.02
160	SLD 10	-14	51	4560	-25.05	-4.15	0.02
160	SLD 11	-4	-1160	5820	25.19	-1.24	0.03
160	SLD 12	-4	-1160	5820	25.19	-1.24	0.03
160	SLD 13	-12	-217	5562	-13.19	-3.99	0.03
160	SLD 14	-12	-217	5562	-13.19	-3.99	0.03
160	SLD 15	-9	-580	5940	1.88	-3.11	0.03
160	SLD 16	-9	-580	5940	1.88	-3.11	0.03
160	SLV 1	-7	-712	2603	3.88	-0.45	0
160	SLV 2	-7	-712	2603	3.88	-0.45	0
160	SLV 3	0	-1589	3536	40.09	1.6	0.01
160	SLV 4	0	-1589	3536	40.09	1.6	0.01
160	SLV 5	-19	681	2829	-51.99	-4.87	0
160	SLV 6	-19	681	2829	-51.99	-4.87	0
160	SLV 7	4	-2242	5942	68.72	1.96	0.03
160	SLV 8	4	-2242	5942	68.72	1.96	0.03
160	SLV 9	-22	999	3956	-63.66	-6.61	0.01
160	SLV 10	-22	999	3956	-63.66	-6.61	0.01
160	SLV 11	1	-1924	7069	57.05	0.22	0.04
160	SLV 12	1	-1924	7069	57.05	0.22	0.04
160	SLV 13	-17	346	6361	-35.03	-6.25	0.04
160	SLV 14	-17	346	6361	-35.03	-6.25	0.04
160	SLV 15	-10	-531	7295	1.18	-4.2	0.04
160	SLV 16	-10	-531	7295	1.18	-4.2	0.04
161	SLU 1	-14	128	6515	-2.81	-3.71	0.03
161	SLU 2	-14	208	6451	-6.78	-3.26	0.03
161	SLU 3	-14	135	6707	-2.95	-3.84	0.03
161	SLU 4	-14	183	6668	-5.33	-3.57	0.03
161	SLU 5	-14	212	6569	-6.87	-3.34	0.03
161	SLU 6	-14	140	6825	-3.04	-3.91	0.03
161	SLU 7	-15	187	6787	-5.42	-3.64	0.03
161	SLU 8	-14	138	6752	-2.99	-3.86	0.03
161	SLU 9	-14	185	6714	-5.37	-3.59	0.03
161	SLU 10	-16	252	7359	-8.11	-3.95	0.04
161	SLU 11	-17	180	7615	-4.28	-4.52	0.04
161	SLU 12	-17	227	7576	-6.66	-4.25	0.04
161	SLU 13	-17	257	7477	-8.2	-4.03	0.04
161	SLU 14	-17	184	7734	-4.37	-4.6	0.04
161	SLU 15	-17	232	7695	-6.75	-4.33	0.04
161	SLU 16	-17	182	7660	-4.33	-4.55	0.04

Nodo	Cont.	Reazione a traslazione			Reazione a rotazione		
Ind.	N.br.	x	y	z	x	y	z
161	SLU 17	-17	230	7622	-6.7	-4.28	0.04
161	SLU 18	-17	192	7812	-4.71	-4.69	0.04
161	SLU 19	-17	240	7774	-7.09	-4.42	0.04
161	SLU 20	-17	197	7931	-4.81	-4.77	0.04
161	SLU 21	-18	244	7892	-7.18	-4.5	0.04
161	SLU 22	-16	167	7372	-3.89	-4.34	0.04
161	SLU 23	-16	246	7308	-7.86	-3.89	0.04
161	SLU 24	-16	174	7564	-4.03	-4.46	0.04
161	SLU 25	-16	221	7525	-6.41	-4.19	0.04
161	SLU 26	-16	251	7426	-7.95	-3.96	0.04
161	SLU 27	-17	178	7682	-4.13	-4.54	0.04
161	SLU 28	-17	226	7644	-6.51	-4.27	0.04
161	SLU 29	-16	176	7609	-4.08	-4.49	0.04
161	SLU 30	-17	224	7571	-6.46	-4.22	0.04
161	SLU 31	-19	290	8216	-9.19	-4.58	0.04
161	SLU 32	-19	218	8472	-5.37	-5.15	0.05
161	SLU 33	-19	266	8433	-7.75	-4.88	0.04
161	SLU 34	-19	295	8334	-9.28	-4.65	0.04
161	SLU 35	-19	223	8591	-5.46	-5.23	0.05
161	SLU 36	-19	270	8552	-7.84	-4.96	0.04
161	SLU 37	-19	221	8517	-5.41	-5.18	0.05
161	SLU 38	-19	268	8479	-7.79	-4.91	0.04
161	SLU 39	-19	230	8669	-5.8	-5.32	0.05
161	SLU 40	-20	278	8630	-8.18	-5.05	0.05
161	SLU 41	-20	235	8788	-5.89	-5.4	0.05
161	SLU 42	-20	283	8749	-8.27	-5.13	0.05
161	SLU 43	-17	154	8175	-3.28	-4.61	0.04
161	SLU 44	-17	233	8111	-7.25	-4.16	0.04
161	SLU 45	-17	161	8367	-3.42	-4.73	0.04
161	SLU 46	-18	208	8329	-5.8	-4.46	0.04
161	SLU 47	-17	238	8230	-7.34	-4.24	0.04
161	SLU 48	-18	165	8486	-3.51	-4.81	0.04
161	SLU 49	-18	213	8448	-5.89	-4.54	0.04
161	SLU 50	-18	163	8413	-3.46	-4.76	0.04
161	SLU 51	-18	211	8374	-5.84	-4.49	0.04
161	SLU 52	-20	278	9019	-8.58	-4.85	0.04
161	SLU 53	-20	205	9275	-4.75	-5.42	0.05
161	SLU 54	-20	253	9237	-7.13	-5.15	0.05
161	SLU 55	-20	282	9138	-8.67	-4.92	0.04
161	SLU 56	-20	210	9394	-4.85	-5.5	0.05
161	SLU 57	-20	257	9356	-7.22	-5.23	0.05
161	SLU 58	-20	208	9321	-4.8	-5.45	0.05
161	SLU 59	-20	255	9282	-7.18	-5.18	0.05
161	SLU 60	-20	217	9472	-5.18	-5.59	0.05
161	SLU 61	-21	265	9434	-7.56	-5.32	0.05
161	SLU 62	-21	222	9591	-5.28	-5.67	0.05
161	SLU 63	-21	270	9553	-7.66	-5.4	0.05
161	SLU 64	-19	192	9032	-4.37	-5.24	0.05
161	SLU 65	-19	271	8968	-8.33	-4.79	0.04
161	SLU 66	-20	199	9224	-4.51	-5.36	0.05
161	SLU 67	-20	246	9186	-6.89	-5.09	0.05
161	SLU 68	-20	276	9087	-8.42	-4.86	0.04
161	SLU 69	-20	204	9343	-4.6	-5.44	0.05
161	SLU 70	-20	251	9305	-6.98	-5.17	0.05
161	SLU 71	-20	202	9270	-4.55	-5.39	0.05
161	SLU 72	-20	249	9231	-6.93	-5.12	0.05
161	SLU 73	-22	316	9876	-9.66	-5.47	0.05
161	SLU 74	-22	243	10132	-5.84	-6.05	0.05
161	SLU 75	-22	291	10094	-8.22	-5.78	0.05
161	SLU 76	-22	321	9995	-9.76	-5.55	0.05
161	SLU 77	-22	248	10251	-5.93	-6.13	0.05
161	SLU 78	-23	296	10213	-8.31	-5.86	0.05
161	SLU 79	-22	246	10178	-5.88	-6.08	0.05
161	SLU 80	-22	294	10139	-8.26	-5.81	0.05
161	SLU 81	-23	256	10329	-6.27	-6.22	0.06
161	SLU 82	-23	303	10291	-8.65	-5.95	0.05
161	SLU 83	-23	260	10448	-6.36	-6.3	0.06
161	SLU 84	-23	308	10410	-8.74	-6.03	0.05
161	SLE RA 1	-14	139	6759	-3.12	-3.89	0.03
161	SLE RA 2	-14	192	6717	-5.76	-3.59	0.03
161	SLE RA 3	-15	144	6888	-3.21	-3.97	0.03
161	SLE RA 4	-15	176	6862	-4.8	-3.79	0.03
161	SLE RA 5	-15	195	6796	-5.82	-3.64	0.03
161	SLE RA 6	-15	147	6967	-3.27	-4.02	0.04
161	SLE RA 7	-15	179	6941	-4.86	-3.84	0.03
161	SLE RA 8	-15	146	6918	-3.24	-3.99	0.03
161	SLE RA 9	-15	177	6892	-4.83	-3.81	0.03
161	SLE RA 10	-16	222	7322	-6.65	-4.05	0.04
161	SLE RA 11	-16	174	7493	-4.1	-4.43	0.04
161	SLE RA 12	-16	205	7467	-5.69	-4.25	0.04
161	SLE RA 13	-16	225	7401	-6.71	-4.1	0.04
161	SLE RA 14	-16	177	7572	-4.16	-4.48	0.04
161	SLE RA 15	-16	208	7546	-5.75	-4.3	0.04
161	SLE RA 16	-16	175	7523	-4.13	-4.45	0.04
161	SLE RA 17	-16	207	7498	-5.72	-4.27	0.04
161	SLE RA 18	-17	182	7624	-4.39	-4.55	0.04
161	SLE RA 19	-17	213	7599	-5.98	-4.37	0.04
161	SLE RA 20	-17	185	7703	-4.45	-4.6	0.04
161	SLE RA 21	-17	217	7678	-6.04	-4.42	0.04
161	SLE FR 1	-14	139	6759	-3.12	-3.89	0.03

Nodo	Cont.	Reazione a traslazione			Reazione a rotazione		
Ind.	N.br.	x	y	z	x	y	z
161	SLE FR 2	-14	150	6751	-3.65	-3.83	0.03
161	SLE FR 3	-14	141	6791	-3.14	-3.91	0.03
161	SLE FR 4	-15	163	7010	-4.03	-4.03	0.04
161	SLE FR 5	-15	153	7051	-3.52	-4.11	0.04
161	SLE FR 6	-15	161	7192	-3.75	-4.22	0.04
161	SLE QP 1	-14	139	6759	-3.12	-3.89	0.03
161	SLE QP 2	-15	152	7019	-3.5	-4.09	0.04
161	SLD 1	-11	192	5253	-7.24	-2.63	0.01
161	SLD 2	-11	192	5253	-7.24	-2.63	0.01
161	SLD 3	-4	-194	5036	11.47	0.34	0.02
161	SLD 4	-4	-194	5036	11.47	0.34	0.02
161	SLD 5	-24	748	6818	-33	-8.15	0.02
161	SLD 6	-24	748	6818	-33	-8.15	0.02
161	SLD 7	-1	-536	6095	29.37	1.74	0.04
161	SLD 8	-1	-536	6095	29.37	1.74	0.04
161	SLD 9	-29	840	7943	-36.37	-9.91	0.03
161	SLD 10	-29	840	7943	-36.37	-9.91	0.03
161	SLD 11	-6	-444	7220	26	-0.03	0.05
161	SLD 12	-6	-444	7220	26	-0.03	0.05
161	SLD 13	-26	498	9002	-18.47	-8.51	0.05
161	SLD 14	-26	498	9002	-18.47	-8.51	0.05
161	SLD 15	-19	113	8785	0.24	-5.54	0.06
161	SLD 16	-19	113	8785	0.24	-5.54	0.06
161	SLV 1	-6	244	2900	-12.17	-0.93	-0.02
161	SLV 2	-6	244	2900	-12.17	-0.93	-0.02
161	SLV 3	11	-656	2364	31.54	6.61	0
161	SLV 4	11	-656	2364	31.54	6.61	0
161	SLV 5	-38	1545	6595	-72.4	-14.59	0
161	SLV 6	-38	1545	6595	-72.4	-14.59	0
161	SLV 7	19	-1456	4810	73.31	10.57	0.04
161	SLV 8	19	-1456	4810	73.31	10.57	0.04
161	SLV 9	-49	1760	9227	-80.31	-18.74	0.03
161	SLV 10	-49	1760	9227	-80.31	-18.74	0.03
161	SLV 11	8	-1240	7443	65.4	6.41	0.07
161	SLV 12	8	-1240	7443	65.4	6.41	0.07
161	SLV 13	-41	961	11674	-38.54	-14.79	0.08
161	SLV 14	-41	961	11674	-38.54	-14.79	0.08
161	SLV 15	-24	60	11138	5.17	-7.24	0.09
161	SLV 16	-24	60	11138	5.17	-7.24	0.09
162	SLU 1	0	333	2413	-0.54	-0.02	0.01
162	SLU 2	0	335	2426	-0.52	-0.02	0.01
162	SLU 3	0	347	2488	-0.66	0	0.01
162	SLU 4	0	348	2496	-0.65	0	0.01
162	SLU 5	0	345	2478	-0.6	0	0.01
162	SLU 6	0	357	2540	-0.73	0.02	0.01
162	SLU 7	0	358	2548	-0.72	0.02	0.01
162	SLU 8	0	352	2517	-0.69	0.03	0.01
162	SLU 9	0	353	2525	-0.68	0.02	0.01
162	SLU 10	0	414	2796	-1.69	-0.02	0.02
162	SLU 11	0	426	2858	-1.83	0	0.02
162	SLU 12	0	427	2866	-1.82	0	0.02
162	SLU 13	0	423	2848	-1.77	0	0.02
162	SLU 14	0	435	2910	-1.9	0.02	0.01
162	SLU 15	0	437	2918	-1.89	0.02	0.02
162	SLU 16	0	431	2887	-1.86	0.02	0.01
162	SLU 17	0	432	2895	-1.85	0.02	0.01
162	SLU 18	0	445	2941	-2.21	-0.02	0.02
162	SLU 19	0	447	2949	-2.2	-0.02	0.02
162	SLU 20	0	455	2993	-2.29	0	0.02
162	SLU 21	0	456	3001	-2.28	0	0.02
162	SLU 22	0	398	2746	-1.23	-0.01	0.01
162	SLU 23	0	400	2759	-1.21	-0.02	0.01
162	SLU 24	0	412	2822	-1.34	0	0.01
162	SLU 25	0	413	2829	-1.33	0	0.01
162	SLU 26	0	409	2811	-1.29	0.01	0.01
162	SLU 27	0	421	2874	-1.42	0.03	0.01
162	SLU 28	0	423	2881	-1.41	0.02	0.01
162	SLU 29	0	417	2850	-1.38	0.03	0.01
162	SLU 30	0	418	2858	-1.37	0.03	0.01
162	SLU 31	0	478	3129	-2.38	-0.02	0.02
162	SLU 32	0	490	3192	-2.51	0	0.02
162	SLU 33	0	492	3199	-2.5	0	0.02
162	SLU 34	0	488	3181	-2.46	0	0.02
162	SLU 35	0	500	3244	-2.59	0.02	0.02
162	SLU 36	0	501	3251	-2.58	0.02	0.02
162	SLU 37	0	496	3220	-2.55	0.03	0.02
162	SLU 38	0	497	3228	-2.54	0.02	0.02
162	SLU 39	0	510	3275	-2.9	-0.02	0.02
162	SLU 40	0	511	3282	-2.89	-0.02	0.02
162	SLU 41	0	520	3327	-2.98	0	0.02
162	SLU 42	0	521	3334	-2.97	0	0.02
162	SLU 43	0	411	3022	-0.47	-0.02	0.01
162	SLU 44	0	413	3035	-0.45	-0.03	0.01
162	SLU 45	0	425	3098	-0.58	-0.01	0.01
162	SLU 46	0	426	3106	-0.57	-0.01	0.01
162	SLU 47	0	422	3087	-0.53	0	0.01
162	SLU 48	0	434	3150	-0.66	0.02	0.01
162	SLU 49	0	436	3158	-0.65	0.01	0.01
162	SLU 50	0	430	3126	-0.62	0.02	0.01
162	SLU 51	0	431	3134	-0.61	0.02	0.01

Nodo	Cont.	Reazione a traslazione			Reazione a rotazione		
Ind.	N.br.	x	y	z	x	y	z
162	SLU 52	0	491	3405	-1.62	-0.03	0.02
162	SLU 53	0	503	3468	-1.75	-0.01	0.02
162	SLU 54	0	505	3476	-1.74	-0.01	0.02
162	SLU 55	0	501	3457	-1.7	-0.01	0.02
162	SLU 56	0	513	3520	-1.83	0.01	0.02
162	SLU 57	0	514	3528	-1.82	0.01	0.02
162	SLU 58	0	509	3496	-1.79	0.02	0.02
162	SLU 59	0	510	3504	-1.78	0.01	0.02
162	SLU 60	0	523	3551	-2.14	-0.03	0.02
162	SLU 61	0	524	3559	-2.13	-0.03	0.02
162	SLU 62	0	533	3603	-2.22	-0.01	0.02
162	SLU 63	0	534	3611	-2.21	-0.01	0.02
162	SLU 64	0	475	3356	-1.15	-0.02	0.02
162	SLU 65	0	477	3369	-1.14	-0.02	0.02
162	SLU 66	0	489	3431	-1.27	0	0.02
162	SLU 67	0	491	3439	-1.26	0	0.02
162	SLU 68	0	487	3421	-1.21	0	0.02
162	SLU 69	0	499	3483	-1.35	0.02	0.02
162	SLU 70	0	500	3491	-1.34	0.02	0.02
162	SLU 71	0	495	3460	-1.31	0.02	0.02
162	SLU 72	0	496	3467	-1.3	0.02	0.02
162	SLU 73	0	556	3739	-2.31	-0.03	0.02
162	SLU 74	0	568	3801	-2.44	-0.01	0.02
162	SLU 75	0	569	3809	-2.43	-0.01	0.02
162	SLU 76	0	566	3791	-2.38	0	0.02
162	SLU 77	0	578	3853	-2.52	0.02	0.02
162	SLU 78	0	579	3861	-2.51	0.02	0.02
162	SLU 79	0	573	3830	-2.48	0.02	0.02
162	SLU 80	0	575	3837	-2.47	0.02	0.02
162	SLU 81	0	588	3884	-2.83	-0.03	0.02
162	SLU 82	0	589	3892	-2.82	-0.03	0.02
162	SLU 83	0	598	3936	-2.9	0	0.02
162	SLU 84	0	599	3944	-2.89	0	0.02
162	SLE RA 1	0	351	2508	-0.74	-0.02	0.01
162	SLE RA 2	0	353	2517	-0.73	-0.02	0.01
162	SLE RA 3	0	361	2558	-0.81	0	0.01
162	SLE RA 4	0	362	2564	-0.81	-0.01	0.01
162	SLE RA 5	0	359	2551	-0.78	0	0.01
162	SLE RA 6	0	367	2593	-0.87	0.01	0.01
162	SLE RA 7	0	368	2598	-0.86	0.01	0.01
162	SLE RA 8	0	364	2577	-0.84	0.01	0.01
162	SLE RA 9	0	365	2583	-0.83	0.01	0.01
162	SLE RA 10	0	405	2763	-1.51	-0.02	0.01
162	SLE RA 11	0	413	2805	-1.59	-0.01	0.01
162	SLE RA 12	0	414	2810	-1.59	-0.01	0.01
162	SLE RA 13	0	412	2798	-1.56	-0.01	0.01
162	SLE RA 14	0	420	2840	-1.65	0.01	0.01
162	SLE RA 15	0	421	2845	-1.64	0.01	0.01
162	SLE RA 16	0	417	2824	-1.62	0.01	0.01
162	SLE RA 17	0	418	2829	-1.61	0.01	0.01
162	SLE RA 18	0	426	2860	-1.85	-0.02	0.02
162	SLE RA 19	0	427	2866	-1.84	-0.02	0.02
162	SLE RA 20	0	433	2895	-1.9	-0.01	0.02
162	SLE RA 21	0	434	2900	-1.9	-0.01	0.02
162	SLE FR 1	0	351	2508	-0.74	-0.02	0.01
162	SLE FR 2	0	352	2510	-0.73	-0.02	0.01
162	SLE FR 3	0	354	2522	-0.76	-0.01	0.01
162	SLE FR 4	0	374	2615	-1.07	-0.02	0.01
162	SLE FR 5	0	376	2628	-1.09	-0.01	0.01
162	SLE FR 6	0	389	2684	-1.29	-0.02	0.01
162	SLE QP 1	0	351	2508	-0.74	-0.02	0.01
162	SLE QP 2	0	374	2614	-1.07	-0.02	0.01
162	SLD 1	4	415	2640	-1.96	2.27	-0.04
162	SLD 2	4	415	2640	-1.96	2.27	-0.04
162	SLD 3	3	358	2761	2.26	1.99	-0.03
162	SLD 4	3	358	2761	2.26	1.99	-0.03
162	SLD 5	3	473	2438	-7.73	1.09	-0.02
162	SLD 6	3	473	2438	-7.73	1.09	-0.02
162	SLD 7	0	283	2841	6.32	0.17	0.02
162	SLD 8	0	283	2841	6.32	0.17	0.02
162	SLD 9	0	465	2387	-8.47	-0.2	0
162	SLD 10	0	465	2387	-8.47	-0.2	0
162	SLD 11	-2	275	2789	5.59	-1.12	0.05
162	SLD 12	-2	275	2789	5.59	-1.12	0.05
162	SLD 13	-3	389	2467	-4.4	-2.03	0.05
162	SLD 14	-3	389	2467	-4.4	-2.03	0.05
162	SLD 15	-4	332	2588	-0.18	-2.3	0.07
162	SLD 16	-4	332	2588	-0.18	-2.3	0.07
162	SLV 1	10	471	2671	-3.15	5.33	-0.11
162	SLV 2	10	471	2671	-3.15	5.33	-0.11
162	SLV 3	8	337	2961	6.72	4.68	-0.08
162	SLV 4	8	337	2961	6.72	4.68	-0.08
162	SLV 5	6	606	2192	-16.67	2.57	-0.07
162	SLV 6	6	606	2192	-16.67	2.57	-0.07
162	SLV 7	-1	160	3157	16.24	0.41	0.03
162	SLV 8	-1	160	3157	16.24	0.41	0.03
162	SLV 9	1	588	2070	-18.38	-0.44	-0.01
162	SLV 10	1	588	2070	-18.38	-0.44	-0.01
162	SLV 11	-6	142	3036	14.53	-2.61	0.1
162	SLV 12	-6	142	3036	14.53	-2.61	0.1

Nodo	Cont.	Reazione a traslazione			Reazione a rotazione		
Ind.	N.br.	x	y	z	x	y	z
162	SLV 13	-8	410	2266	-8.87	-4.72	0.11
162	SLV 14	-8	410	2266	-8.87	-4.72	0.11
162	SLV 15	-9	277	2556	1.01	-5.37	0.14
162	SLV 16	-9	277	2556	1.01	-5.37	0.14
163	SLU 1	-7	-388	6735	39	0.7	0.18
163	SLU 2	-7	-493	6882	44.35	0.87	0.19
163	SLU 3	-8	-398	6954	40.21	0.7	0.19
163	SLU 4	-7	-461	7042	43.41	0.8	0.19
163	SLU 5	-7	-500	7023	45.16	0.88	0.19
163	SLU 6	-8	-405	7095	41.02	0.71	0.19
163	SLU 7	-8	-468	7183	44.23	0.82	0.19
163	SLU 8	-8	-402	7017	40.63	0.72	0.18
163	SLU 9	-7	-465	7105	43.83	0.83	0.19
163	SLU 10	-7	-531	8024	50.29	1.82	0.27
163	SLU 11	-7	-436	8096	46.15	1.65	0.27
163	SLU 12	-7	-499	8184	49.36	1.75	0.27
163	SLU 13	-7	-538	8165	51.1	1.83	0.27
163	SLU 14	-8	-443	8238	46.96	1.66	0.27
163	SLU 15	-8	-506	8325	50.17	1.77	0.27
163	SLU 16	-8	-440	8160	46.57	1.67	0.27
163	SLU 17	-7	-503	8248	49.77	1.78	0.27
163	SLU 18	-7	-442	8368	47.49	2.06	0.3
163	SLU 19	-7	-506	8455	50.7	2.16	0.3
163	SLU 20	-7	-449	8509	48.3	2.07	0.3
163	SLU 21	-7	-513	8597	51.51	2.17	0.3
163	SLU 22	-8	-411	7754	43.93	0.86	0.22
163	SLU 23	-8	-516	7900	49.27	1.03	0.22
163	SLU 24	-9	-421	7972	45.13	0.86	0.22
163	SLU 25	-8	-484	8060	48.34	0.96	0.22
163	SLU 26	-8	-523	8041	50.08	1.04	0.22
163	SLU 27	-9	-428	8114	45.94	0.87	0.22
163	SLU 28	-9	-491	8201	49.15	0.98	0.22
163	SLU 29	-9	-425	8036	45.55	0.88	0.22
163	SLU 30	-9	-488	8124	48.75	0.99	0.22
163	SLU 31	-8	-554	9043	55.21	1.98	0.31
163	SLU 32	-9	-459	9115	51.07	1.81	0.3
163	SLU 33	-8	-522	9203	54.28	1.91	0.3
163	SLU 34	-8	-561	9184	56.02	1.99	0.31
163	SLU 35	-9	-466	9256	51.88	1.82	0.3
163	SLU 36	-9	-529	9344	55.09	1.93	0.3
163	SLU 37	-9	-463	9179	51.49	1.83	0.3
163	SLU 38	-8	-526	9267	54.69	1.94	0.3
163	SLU 39	-8	-466	9386	52.42	2.22	0.33
163	SLU 40	-8	-529	9474	55.62	2.32	0.34
163	SLU 41	-8	-473	9527	53.23	2.23	0.33
163	SLU 42	-8	-536	9615	56.43	2.33	0.34
163	SLU 43	-9	-497	8406	49.02	0.85	0.23
163	SLU 44	-9	-602	8553	54.36	1.02	0.23
163	SLU 45	-9	-506	8625	50.22	0.86	0.23
163	SLU 46	-9	-569	8713	53.43	0.96	0.23
163	SLU 47	-9	-609	8694	55.17	1.04	0.23
163	SLU 48	-10	-513	8766	51.03	0.87	0.23
163	SLU 49	-9	-576	8854	54.24	0.97	0.23
163	SLU 50	-9	-511	8689	50.64	0.88	0.23
163	SLU 51	-9	-574	8777	53.84	0.98	0.23
163	SLU 52	-9	-640	9696	60.3	1.97	0.31
163	SLU 53	-9	-544	9768	56.17	1.81	0.31
163	SLU 54	-9	-607	9856	59.37	1.91	0.31
163	SLU 55	-9	-647	9837	61.11	1.99	0.31
163	SLU 56	-9	-551	9909	56.98	1.82	0.31
163	SLU 57	-9	-614	9997	60.18	1.92	0.31
163	SLU 58	-9	-549	9831	56.58	1.83	0.31
163	SLU 59	-9	-612	9919	59.79	1.93	0.31
163	SLU 60	-9	-551	10039	57.51	2.21	0.34
163	SLU 61	-9	-614	10127	60.71	2.31	0.35
163	SLU 62	-9	-558	10180	58.32	2.22	0.34
163	SLU 63	-9	-621	10268	61.52	2.33	0.35
163	SLU 64	-10	-520	9425	53.94	1.01	0.26
163	SLU 65	-10	-625	9571	59.28	1.18	0.27
163	SLU 66	-10	-529	9644	55.15	1.02	0.26
163	SLU 67	-10	-592	9732	58.35	1.12	0.27
163	SLU 68	-10	-632	9713	60.09	1.2	0.27
163	SLU 69	-11	-536	9785	55.96	1.03	0.26
163	SLU 70	-10	-599	9873	59.16	1.13	0.27
163	SLU 71	-10	-534	9707	55.56	1.04	0.26
163	SLU 72	-10	-597	9795	58.77	1.14	0.27
163	SLU 73	-10	-663	10714	65.22	2.13	0.35
163	SLU 74	-10	-567	10786	61.09	1.97	0.34
163	SLU 75	-10	-630	10874	64.29	2.07	0.35
163	SLU 76	-10	-670	10855	66.03	2.15	0.35
163	SLU 77	-11	-574	10928	61.9	1.98	0.34
163	SLU 78	-10	-637	11015	65.1	2.08	0.35
163	SLU 79	-10	-572	10850	61.5	1.99	0.34
163	SLU 80	-10	-635	10938	64.71	2.09	0.35
163	SLU 81	-10	-574	11057	62.43	2.37	0.38
163	SLU 82	-10	-637	11145	65.63	2.47	0.38
163	SLU 83	-10	-581	11199	63.24	2.38	0.38
163	SLU 84	-10	-644	11286	66.44	2.49	0.38
163	SLE RA 1	-7	-395	7026	40.41	0.74	0.19
163	SLE RA 2	-7	-465	7124	43.97	0.86	0.2

Nodo	Cont.	Reazione a traslazione			Reazione a rotazione		
Ind.	N.br.	x	y	z	x	y	z
163	SLE RA 3	-8	-401	7172	41.21	0.75	0.2
163	SLE RA 4	-8	-443	7230	43.35	0.81	0.2
163	SLE RA 5	-7	-470	7218	44.51	0.87	0.2
163	SLE RA 6	-8	-406	7266	41.76	0.75	0.2
163	SLE RA 7	-8	-448	7325	43.89	0.82	0.2
163	SLE RA 8	-8	-404	7214	41.49	0.76	0.19
163	SLE RA 9	-8	-446	7273	43.63	0.83	0.2
163	SLE RA 10	-7	-490	7886	47.93	1.49	0.25
163	SLE RA 11	-8	-426	7934	45.18	1.38	0.25
163	SLE RA 12	-8	-468	7992	47.31	1.45	0.25
163	SLE RA 13	-7	-495	7980	48.47	1.5	0.25
163	SLE RA 14	-8	-431	8028	45.72	1.39	0.25
163	SLE RA 15	-8	-473	8086	47.85	1.46	0.25
163	SLE RA 16	-8	-429	7976	45.45	1.39	0.25
163	SLE RA 17	-8	-472	8035	47.59	1.46	0.25
163	SLE RA 18	-7	-431	8114	46.07	1.65	0.27
163	SLE RA 19	-7	-473	8173	48.21	1.72	0.27
163	SLE RA 20	-8	-436	8209	46.61	1.66	0.27
163	SLE RA 21	-7	-478	8267	48.75	1.73	0.27
163	SLE FR 1	-7	-395	7026	40.41	0.74	0.19
163	SLE FR 2	-7	-409	7046	41.12	0.77	0.19
163	SLE FR 3	-8	-397	7064	40.63	0.75	0.19
163	SLE FR 4	-7	-420	7372	42.82	1.04	0.22
163	SLE FR 5	-8	-408	7390	42.33	1.02	0.22
163	SLE FR 6	-7	-413	7570	43.24	1.2	0.23
163	SLE QP 1	-7	-395	7026	40.41	0.74	0.19
163	SLE QP 2	-7	-406	7353	42.11	1.02	0.22
163	SLD 1	-1	-394	6393	38.31	6.82	-0.05
163	SLD 2	-1	-394	6393	38.31	6.82	-0.05
163	SLD 3	5	-758	6976	57.76	8.91	0.01
163	SLD 4	5	-758	6976	57.76	8.91	0.01
163	SLD 5	-15	149	6182	11.47	-0.41	0.04
163	SLD 6	-15	149	6182	11.47	-0.41	0.04
163	SLD 7	6	-1063	8123	76.3	6.55	0.25
163	SLD 8	6	-1063	8123	76.3	6.55	0.25
163	SLD 9	-21	251	6583	7.92	-4.52	0.19
163	SLD 10	-21	251	6583	7.92	-4.52	0.19
163	SLD 11	0	-960	8524	72.75	2.44	0.39
163	SLD 12	0	-960	8524	72.75	2.44	0.39
163	SLD 13	-20	-54	7729	26.46	-6.88	0.43
163	SLD 14	-20	-54	7729	26.46	-6.88	0.43
163	SLD 15	-14	-417	8312	45.91	-4.79	0.49
163	SLD 16	-14	-417	8312	45.91	-4.79	0.49
163	SLV 1	8	-379	5097	33.2	14.6	-0.41
163	SLV 2	8	-379	5097	33.2	14.6	-0.41
163	SLV 3	23	-1233	6478	78.94	19.54	-0.27
163	SLV 4	23	-1233	6478	78.94	19.54	-0.27
163	SLV 5	-25	898	4580	-29.94	-2.41	-0.19
163	SLV 6	-25	898	4580	-29.94	-2.41	-0.19
163	SLV 7	23	-1949	9186	122.54	14.07	0.29
163	SLV 8	23	-1949	9186	122.54	14.07	0.29
163	SLV 9	-38	1138	5519	-38.32	-12.04	0.14
163	SLV 10	-38	1138	5519	-38.32	-12.04	0.14
163	SLV 11	10	-1709	10125	114.16	4.44	0.63
163	SLV 12	10	-1709	10125	114.16	4.44	0.63
163	SLV 13	-38	422	8227	5.27	-17.51	0.7
163	SLV 14	-38	422	8227	5.27	-17.51	0.7
163	SLV 15	-23	-433	9609	51.02	-12.57	0.85
163	SLV 16	-23	-433	9609	51.02	-12.57	0.85
164	SLU 1	1294	1	11502	-3.87	40.54	-0.01
164	SLU 2	1278	108	11345	-7.56	40.02	0.01
164	SLU 3	1350	5	11898	-4.19	42.4	-0.01
164	SLU 4	1340	69	11803	-6.4	42.09	0.01
164	SLU 5	1320	113	11622	-7.86	41.44	0.01
164	SLU 6	1392	10	12175	-4.49	43.82	-0.01
164	SLU 7	1382	74	12081	-6.7	43.51	0.01
164	SLU 8	1378	11	12057	-4.48	43.38	-0.01
164	SLU 9	1368	75	11962	-6.69	43.06	0.01
164	SLU 10	1519	107	12972	-8	48.02	0.01
164	SLU 11	1592	3	13525	-4.63	50.41	-0.01
164	SLU 12	1582	68	13431	-6.84	50.09	0
164	SLU 13	1561	111	13250	-8.3	49.44	0.01
164	SLU 14	1633	8	13803	-4.93	51.83	-0.01
164	SLU 15	1623	72	13709	-7.14	51.51	0.01
164	SLU 16	1619	9	13684	-4.92	51.38	-0.01
164	SLU 17	1610	73	13590	-7.13	51.07	0.01
164	SLU 18	1640	-1	13827	-4.5	51.97	-0.01
164	SLU 19	1630	63	13733	-6.71	51.66	0
164	SLU 20	1681	3	14104	-4.8	53.39	-0.01
164	SLU 21	1671	68	14010	-7.02	53.08	0
164	SLU 22	1518	1	13063	-4.4	47.92	-0.01
164	SLU 23	1501	108	12906	-8.08	47.4	0.01
164	SLU 24	1573	5	13459	-4.71	49.79	-0.01
164	SLU 25	1563	69	13364	-6.92	49.47	0.01
164	SLU 26	1543	113	13183	-8.39	48.82	0.01
164	SLU 27	1615	10	13736	-5.02	51.2	-0.01
164	SLU 28	1605	74	13642	-7.23	50.89	0.01
164	SLU 29	1601	11	13618	-5	50.76	-0.01
164	SLU 30	1591	75	13523	-7.22	50.45	0.01
164	SLU 31	1743	107	14533	-8.52	55.41	0.01

Nodo	Cont.	Reazione a traslazione			Reazione a rotazione		
Ind.	N.br.	x	y	z	x	y	z
164	SLU 32	1815	3	15086	-5.15	57.79	-0.01
164	SLU 33	1805	68	14992	-7.36	57.48	0
164	SLU 34	1785	111	14811	-8.83	56.82	0.01
164	SLU 35	1857	8	15364	-5.46	59.21	-0.01
164	SLU 36	1847	72	15270	-7.67	58.9	0
164	SLU 37	1843	9	15245	-5.44	58.76	-0.01
164	SLU 38	1833	73	15151	-7.66	58.45	0
164	SLU 39	1863	-1	15388	-5.03	59.36	-0.01
164	SLU 40	1853	63	15294	-7.24	59.05	0
164	SLU 41	1905	3	15665	-5.33	60.78	-0.01
164	SLU 42	1895	68	15571	-7.54	60.46	0
164	SLU 43	1606	2	14417	-4.85	50.17	-0.01
164	SLU 44	1589	109	14260	-8.54	49.65	0.01
164	SLU 45	1662	6	14813	-5.17	52.03	-0.01
164	SLU 46	1652	70	14719	-7.38	51.72	0
164	SLU 47	1631	114	14537	-8.84	51.07	0.01
164	SLU 48	1703	10	15091	-5.47	53.45	-0.01
164	SLU 49	1693	74	14996	-7.68	53.14	0
164	SLU 50	1690	11	14972	-5.46	53.01	-0.01
164	SLU 51	1680	75	14878	-7.67	52.69	0
164	SLU 52	1831	107	15888	-8.98	57.65	0.01
164	SLU 53	1903	4	16441	-5.61	60.04	-0.01
164	SLU 54	1893	68	16346	-7.82	59.72	0
164	SLU 55	1873	112	16165	-9.28	59.07	0.01
164	SLU 56	1945	8	16718	-5.91	61.45	-0.01
164	SLU 57	1935	73	16624	-8.12	61.14	0
164	SLU 58	1931	9	16600	-5.9	61.01	-0.01
164	SLU 59	1921	73	16505	-8.11	60.7	0
164	SLU 60	1951	-1	16742	-5.48	61.6	-0.01
164	SLU 61	1941	63	16648	-7.69	61.29	0
164	SLU 62	1993	4	17020	-5.78	63.02	-0.01
164	SLU 63	1983	68	16925	-8	62.71	0
164	SLU 64	1829	2	15978	-5.38	57.55	-0.01
164	SLU 65	1813	109	15821	-9.07	57.03	0.01
164	SLU 66	1885	5	16374	-5.69	59.42	-0.01
164	SLU 67	1875	70	16280	-7.91	59.1	0
164	SLU 68	1855	113	16098	-9.37	58.45	0.01
164	SLU 69	1927	10	16652	-6	60.83	-0.01
164	SLU 70	1917	74	16557	-8.21	60.52	0
164	SLU 71	1913	11	16533	-5.99	60.39	-0.01
164	SLU 72	1903	75	16439	-8.2	60.08	0
164	SLU 73	2055	107	17449	-9.51	65.04	0.01
164	SLU 74	2127	4	18002	-6.13	67.42	-0.01
164	SLU 75	2117	68	17907	-8.35	67.11	0
164	SLU 76	2096	112	17726	-9.81	66.45	0.01
164	SLU 77	2168	8	18279	-6.44	68.84	-0.01
164	SLU 78	2158	73	18185	-8.65	68.53	0
164	SLU 79	2155	9	18161	-6.43	68.39	-0.01
164	SLU 80	2145	73	18066	-8.64	68.08	0
164	SLU 81	2175	-1	18303	-6.01	68.99	-0.01
164	SLU 82	2165	63	18209	-8.22	68.68	0
164	SLU 83	2216	4	18581	-6.31	70.41	-0.01
164	SLU 84	2206	68	18486	-8.52	70.09	0
164	SLE RA 1	1358	1	11948	-4.02	42.65	-0.01
164	SLE RA 2	1347	73	11843	-6.48	42.3	0.01
164	SLE RA 3	1395	4	12212	-4.23	43.89	-0.01
164	SLE RA 4	1389	47	12149	-5.71	43.68	0
164	SLE RA 5	1375	76	12028	-6.68	43.25	0.01
164	SLE RA 6	1423	7	12397	-4.43	44.84	-0.01
164	SLE RA 7	1416	50	12334	-5.91	44.63	0
164	SLE RA 8	1414	7	12318	-4.43	44.54	-0.01
164	SLE RA 9	1407	50	12255	-5.9	44.33	0
164	SLE RA 10	1508	72	12928	-6.77	47.64	0.01
164	SLE RA 11	1556	3	13297	-4.52	49.23	-0.01
164	SLE RA 12	1550	46	13234	-6	49.02	0
164	SLE RA 13	1536	75	13113	-6.98	48.58	0.01
164	SLE RA 14	1584	6	13482	-4.73	50.17	-0.01
164	SLE RA 15	1577	49	13419	-6.2	49.96	0
164	SLE RA 16	1575	6	13403	-4.72	49.88	-0.01
164	SLE RA 17	1568	49	13340	-6.19	49.67	0
164	SLE RA 18	1588	0	13498	-4.44	50.27	-0.01
164	SLE RA 19	1582	42	13435	-5.92	50.06	0
164	SLE RA 20	1616	3	13683	-4.64	51.22	-0.01
164	SLE RA 21	1610	46	13620	-6.12	51.01	0
164	SLE FR 1	1358	1	11948	-4.02	42.65	-0.01
164	SLE FR 2	1356	16	11927	-4.51	42.58	0
164	SLE FR 3	1369	3	12022	-4.1	43.03	-0.01
164	SLE FR 4	1425	15	12392	-4.64	44.87	0
164	SLE FR 5	1438	2	12487	-4.23	45.31	-0.01
164	SLE FR 6	1473	0	12723	-4.23	46.46	-0.01
164	SLE QP 1	1358	1	11948	-4.02	42.65	-0.01
164	SLE QP 2	1427	1	12413	-4.15	44.94	-0.01
164	SLD 1	2068	249	15924	-13.25	67.59	0.04
164	SLD 2	2068	249	15924	-13.25	67.59	0.04
164	SLD 3	2007	-131	15629	0.22	65.4	-0.03
164	SLD 4	2007	-131	15629	0.22	65.4	-0.03
164	SLD 5	1711	651	13913	-27.3	55.05	0.12
164	SLD 6	1711	651	13913	-27.3	55.05	0.12
164	SLD 7	1509	-614	12931	17.59	47.75	-0.13
164	SLD 8	1509	-614	12931	17.59	47.75	-0.13

Nodo	Cont.	Reazione a traslazione			Reazione a rotazione		
Ind.	N.br.	x	y	z	x	y	z
164	SLD 9	1345	616	11895	-25.88	42.12	0.11
164	SLD 10	1345	616	11895	-25.88	42.12	0.11
164	SLD 11	1143	-649	10912	19.01	34.82	-0.14
164	SLD 12	1143	-649	10912	19.01	34.82	-0.14
164	SLD 13	847	132	9196	-8.51	24.47	0.02
164	SLD 14	847	132	9196	-8.51	24.47	0.02
164	SLD 15	787	-247	8901	4.96	22.28	-0.06
164	SLD 16	787	-247	8901	4.96	22.28	-0.06
164	SLV 1	2930	584	20660	-25.52	98.1	0.11
164	SLV 2	2930	584	20660	-25.52	98.1	0.11
164	SLV 3	2778	-303	19914	5.96	92.63	-0.06
164	SLV 4	2778	-303	19914	5.96	92.63	-0.06
164	SLV 5	2108	1520	16018	-58.29	69.17	0.3
164	SLV 6	2108	1520	16018	-58.29	69.17	0.3
164	SLV 7	1603	-1435	13532	46.62	50.96	-0.29
164	SLV 8	1603	-1435	13532	46.62	50.96	-0.29
164	SLV 9	1252	1436	11294	-54.91	38.91	0.28
164	SLV 10	1252	1436	11294	-54.91	38.91	0.28
164	SLV 11	747	-1519	8807	50	20.7	-0.31
164	SLV 12	747	-1519	8807	50	20.7	-0.31
164	SLV 13	76	304	4912	-14.25	-2.76	0.05
164	SLV 14	76	304	4912	-14.25	-2.76	0.05
164	SLV 15	-75	-582	4166	17.22	-8.22	-0.13
164	SLV 16	-75	-582	4166	17.22	-8.22	-0.13
165	SLU 1	1227	-3	5987	-3.57	45.19	0
165	SLU 2	1212	-3	5913	-3.4	44.61	0
165	SLU 3	1290	-3	6179	-3.67	47.54	0
165	SLU 4	1281	-3	6135	-3.57	47.2	0
165	SLU 5	1262	-3	6046	-3.46	46.47	0
165	SLU 6	1341	-3	6313	-3.73	49.4	0
165	SLU 7	1332	-3	6269	-3.63	49.05	0
165	SLU 8	1327	-3	6254	-3.68	48.9	0
165	SLU 9	1318	-3	6210	-3.58	48.55	0
165	SLU 10	1501	-3	6761	-3.85	55.08	0
165	SLU 11	1579	-3	7028	-4.12	58.01	0
165	SLU 12	1570	-4	6984	-4.02	57.66	0
165	SLU 13	1551	-4	6895	-3.91	56.93	0
165	SLU 14	1630	-4	7162	-4.18	59.87	0
165	SLU 15	1621	-4	7117	-4.08	59.52	0
165	SLU 16	1616	-4	7103	-4.14	59.37	0
165	SLU 17	1607	-4	7059	-4.03	59.02	0
165	SLU 18	1640	-4	7199	-4.21	60.14	0
165	SLU 19	1631	-4	7155	-4.11	59.8	0
165	SLU 20	1690	-4	7333	-4.27	62	0
165	SLU 21	1681	-4	7289	-4.17	61.65	0
165	SLU 22	1487	-3	6790	-4.02	54.65	0
165	SLU 23	1472	-3	6716	-3.85	54.07	0
165	SLU 24	1550	-4	6983	-4.13	57	0
165	SLU 25	1541	-4	6939	-4.03	56.65	0
165	SLU 26	1522	-4	6850	-3.91	55.92	0
165	SLU 27	1600	-4	7117	-4.19	58.85	0
165	SLU 28	1592	-4	7073	-4.09	58.51	0
165	SLU 29	1587	-4	7058	-4.14	58.36	0
165	SLU 30	1578	-4	7014	-4.04	58.01	0
165	SLU 31	1761	-4	7565	-4.3	64.53	0
165	SLU 32	1839	-4	7832	-4.58	67.47	0
165	SLU 33	1830	-4	7787	-4.48	67.12	0
165	SLU 34	1811	-4	7699	-4.36	66.39	0
165	SLU 35	1889	-4	7966	-4.64	69.32	0
165	SLU 36	1881	-4	7921	-4.54	68.97	0
165	SLU 37	1876	-4	7907	-4.59	68.82	0
165	SLU 38	1867	-4	7863	-4.49	68.48	0
165	SLU 39	1899	-4	8003	-4.67	69.6	0
165	SLU 40	1891	-4	7958	-4.57	69.25	0
165	SLU 41	1950	-4	8137	-4.73	71.45	0
165	SLU 42	1941	-4	8092	-4.62	71.11	0
165	SLU 43	1506	-4	7507	-4.48	55.51	0
165	SLU 44	1491	-4	7433	-4.31	54.93	0
165	SLU 45	1569	-4	7700	-4.58	57.86	0
165	SLU 46	1560	-4	7655	-4.48	57.51	0
165	SLU 47	1541	-4	7567	-4.37	56.78	0
165	SLU 48	1619	-4	7834	-4.64	59.72	0
165	SLU 49	1611	-4	7789	-4.54	59.37	0
165	SLU 50	1606	-4	7775	-4.6	59.22	0
165	SLU 51	1597	-4	7730	-4.5	58.87	0
165	SLU 52	1780	-4	8282	-4.76	65.39	0
165	SLU 53	1858	-4	8548	-5.04	68.33	0
165	SLU 54	1849	-4	8504	-4.94	67.98	0
165	SLU 55	1830	-4	8416	-4.82	67.25	0
165	SLU 56	1908	-4	8682	-5.1	70.18	0
165	SLU 57	1900	-4	8638	-4.99	69.83	0
165	SLU 58	1895	-4	8624	-5.05	69.69	0
165	SLU 59	1886	-4	8579	-4.95	69.34	0
165	SLU 60	1918	-4	8720	-5.12	70.46	0
165	SLU 61	1910	-4	8675	-5.02	70.11	0
165	SLU 62	1969	-4	8853	-5.18	72.32	0
165	SLU 63	1960	-4	8809	-5.08	71.97	0
165	SLU 64	1766	-4	8311	-4.93	64.96	0
165	SLU 65	1751	-4	8237	-4.77	64.38	0
165	SLU 66	1829	-4	8503	-5.04	67.32	0

Nodo	Cont.	Reazione a traslazione			Reazione a rotazione		
Ind.	N.br.	x	y	z	x	y	z
165	SLU 67	1820	-4	8459	-4.94	66.97	0
165	SLU 68	1801	-4	8371	-4.83	66.24	0
165	SLU 69	1879	-4	8637	-5.1	69.17	0
165	SLU 70	1871	-4	8593	-5	68.82	0
165	SLU 71	1866	-4	8579	-5.05	68.67	0
165	SLU 72	1857	-4	8534	-4.95	68.33	0
165	SLU 73	2040	-5	9086	-5.22	74.85	0
165	SLU 74	2118	-5	9352	-5.49	77.78	0
165	SLU 75	2109	-5	9308	-5.39	77.43	0
165	SLU 76	2090	-5	9219	-5.28	76.71	0
165	SLU 77	2168	-5	9486	-5.55	79.64	0
165	SLU 78	2160	-5	9442	-5.45	79.29	0
165	SLU 79	2155	-5	9427	-5.5	79.14	0
165	SLU 80	2146	-5	9383	-5.4	78.79	0
165	SLU 81	2178	-5	9523	-5.58	79.92	0
165	SLU 82	2170	-5	9479	-5.48	79.57	0
165	SLU 83	2229	-5	9657	-5.64	81.77	0
165	SLU 84	2220	-5	9613	-5.54	81.42	0
165	SLE RA 1	1301	-3	6216	-3.7	47.89	0
165	SLE RA 2	1291	-3	6167	-3.58	47.51	0
165	SLE RA 3	1343	-3	6345	-3.77	49.46	0
165	SLE RA 4	1338	-3	6315	-3.7	49.23	0
165	SLE RA 5	1325	-3	6256	-3.62	48.74	0
165	SLE RA 6	1377	-3	6434	-3.81	50.7	0
165	SLE RA 7	1371	-3	6404	-3.74	50.47	0
165	SLE RA 8	1368	-3	6395	-3.77	50.37	0
165	SLE RA 9	1362	-3	6365	-3.71	50.14	0
165	SLE RA 10	1484	-3	6733	-3.88	54.48	0
165	SLE RA 11	1536	-3	6911	-4.07	56.44	0
165	SLE RA 12	1530	-3	6881	-4	56.21	0
165	SLE RA 13	1517	-3	6822	-3.92	55.72	0
165	SLE RA 14	1570	-4	7000	-4.11	57.68	0
165	SLE RA 15	1564	-4	6970	-4.04	57.44	0
165	SLE RA 16	1561	-4	6961	-4.08	57.35	0
165	SLE RA 17	1555	-4	6931	-4.01	57.11	0
165	SLE RA 18	1576	-3	7025	-4.13	57.86	0
165	SLE RA 19	1570	-3	6995	-4.06	57.63	0
165	SLE RA 20	1610	-4	7114	-4.17	59.1	0
165	SLE RA 21	1604	-4	7084	-4.1	58.87	0
165	SLE FR 1	1301	-3	6216	-3.7	47.89	0
165	SLE FR 2	1299	-3	6206	-3.67	47.82	0
165	SLE FR 3	1314	-3	6252	-3.71	48.39	0
165	SLE FR 4	1382	-3	6449	-3.8	50.81	0
165	SLE FR 5	1397	-3	6494	-3.84	51.38	0
165	SLE FR 6	1439	-3	6620	-3.91	52.88	0
165	SLE QP 1	1301	-3	6216	-3.7	47.89	0
165	SLE QP 2	1384	-3	6459	-3.82	50.88	0
165	SLD 1	2278	-3	8041	-7.24	84.25	0
165	SLD 2	2278	-3	8041	-7.24	84.25	0
165	SLD 3	2185	-8	7925	-3.79	80.67	0.01
165	SLD 4	2185	-8	7925	-3.79	80.67	0.01
165	SLD 5	1793	5	7110	-10.08	66.33	-0.02
165	SLD 6	1793	5	7110	-10.08	66.33	-0.02
165	SLD 7	1483	-12	6723	1.42	54.39	0.02
165	SLD 8	1483	-12	6723	1.42	54.39	0.02
165	SLD 9	1284	6	6195	-9.07	47.38	-0.02
165	SLD 10	1284	6	6195	-9.07	47.38	-0.02
165	SLD 11	974	-11	5808	2.43	35.44	0.02
165	SLD 12	974	-11	5808	2.43	35.44	0.02
165	SLD 13	582	1	4992	-3.86	21.1	-0.01
165	SLD 14	582	1	4992	-3.86	21.1	-0.01
165	SLD 15	489	-4	4876	-0.41	17.51	0
165	SLD 16	489	-4	4876	-0.41	17.51	0
165	SLV 1	3481	-2	10174	-12.18	129.15	-0.01
165	SLV 2	3481	-2	10174	-12.18	129.15	-0.01
165	SLV 3	3251	-14	9882	-3.47	120.28	0.02
165	SLV 4	3251	-14	9882	-3.47	120.28	0.02
165	SLV 5	2361	16	8016	-19.54	87.83	-0.04
165	SLV 6	2361	16	8016	-19.54	87.83	-0.04
165	SLV 7	1596	-25	7043	9.49	58.24	0.05
165	SLV 8	1596	-25	7043	9.49	58.24	0.05
165	SLV 9	1172	19	5875	-17.14	43.53	-0.05
165	SLV 10	1172	19	5875	-17.14	43.53	-0.05
165	SLV 11	406	-22	4902	11.89	13.94	0.05
165	SLV 12	406	-22	4902	11.89	13.94	0.05
165	SLV 13	-484	8	3036	-4.18	-18.51	-0.02
165	SLV 14	-484	8	3036	-4.18	-18.51	-0.02
165	SLV 15	-714	-4	2744	4.53	-27.39	0.01
165	SLV 16	-714	-4	2744	4.53	-27.39	0.01
166	SLU 1	1010	7	5155	-9.48	41.14	0.03
166	SLU 2	996	6	5102	-8.93	40.56	0.03
166	SLU 3	1069	7	5307	-9.78	43.49	0.03
166	SLU 4	1061	7	5275	-9.45	43.14	0.03
166	SLU 5	1044	6	5206	-9.11	42.42	0.03
166	SLU 6	1117	8	5412	-9.97	45.34	0.03
166	SLU 7	1109	7	5380	-9.64	45	0.03
166	SLU 8	1105	7	5364	-9.85	44.86	0.03
166	SLU 9	1097	7	5332	-9.52	44.51	0.03
166	SLU 10	1260	7	5847	-10.15	50.55	0.03
166	SLU 11	1332	8	6052	-11.01	53.47	0.03

Nodo	Cont.	Reazione a traslazione			Reazione a rotazione		
Ind.	N.br.	x	y	z	x	y	z
166	SLU 12	1324	8	6020	-10.68	53.12	0.03
166	SLU 13	1308	7	5952	-10.34	52.41	0.03
166	SLU 14	1380	8	6157	-11.19	55.33	0.03
166	SLU 15	1372	8	6125	-10.86	54.98	0.03
166	SLU 16	1369	8	6109	-11.07	54.85	0.03
166	SLU 17	1361	8	6077	-10.74	54.5	0.03
166	SLU 18	1386	9	6220	-11.23	55.41	0.03
166	SLU 19	1378	8	6188	-10.9	55.06	0.03
166	SLU 20	1434	9	6324	-11.42	57.27	0.03
166	SLU 21	1426	8	6292	-11.08	56.92	0.03
166	SLU 22	1246	8	5847	-10.72	50.22	0.03
166	SLU 23	1233	7	5793	-10.17	49.64	0.03
166	SLU 24	1305	8	5998	-11.03	52.57	0.03
166	SLU 25	1297	8	5966	-10.7	52.22	0.03
166	SLU 26	1280	7	5898	-10.35	51.5	0.03
166	SLU 27	1353	8	6103	-11.21	54.43	0.03
166	SLU 28	1345	8	6071	-10.88	54.08	0.03
166	SLU 29	1341	8	6056	-11.09	53.94	0.03
166	SLU 30	1333	8	6024	-10.76	53.59	0.03
166	SLU 31	1496	8	6539	-11.4	59.63	0.03
166	SLU 32	1569	9	6744	-12.25	62.55	0.03
166	SLU 33	1561	9	6712	-11.92	62.2	0.03
166	SLU 34	1544	8	6643	-11.58	61.49	0.03
166	SLU 35	1617	9	6848	-12.44	64.41	0.03
166	SLU 36	1609	9	6816	-12.11	64.06	0.03
166	SLU 37	1605	9	6801	-12.32	63.93	0.03
166	SLU 38	1597	9	6769	-11.98	63.58	0.03
166	SLU 39	1622	10	6911	-12.47	64.49	0.03
166	SLU 40	1614	9	6879	-12.14	64.14	0.03
166	SLU 41	1670	10	7016	-12.66	66.35	0.03
166	SLU 42	1662	9	6984	-12.33	66	0.03
166	SLU 43	1231	9	6465	-11.9	50.37	0.03
166	SLU 44	1218	8	6411	-11.35	49.79	0.03
166	SLU 45	1291	9	6616	-12.2	52.71	0.03
166	SLU 46	1283	9	6584	-11.87	52.37	0.03
166	SLU 47	1266	8	6516	-11.53	51.65	0.03
166	SLU 48	1339	9	6721	-12.39	54.57	0.03
166	SLU 49	1331	9	6689	-12.05	54.22	0.03
166	SLU 50	1327	9	6674	-12.26	54.09	0.03
166	SLU 51	1319	9	6642	-11.93	53.74	0.03
166	SLU 52	1482	9	7157	-12.57	59.77	0.04
166	SLU 53	1554	10	7362	-13.43	62.7	0.04
166	SLU 54	1546	10	7330	-13.1	62.35	0.04
166	SLU 55	1529	9	7261	-12.76	61.63	0.04
166	SLU 56	1602	10	7466	-13.61	64.56	0.04
166	SLU 57	1594	10	7434	-13.28	64.21	0.04
166	SLU 58	1590	10	7419	-13.49	64.07	0.04
166	SLU 59	1582	10	7387	-13.16	63.73	0.04
166	SLU 60	1608	10	7529	-13.65	64.64	0.04
166	SLU 61	1600	10	7497	-13.32	64.29	0.04
166	SLU 62	1656	11	7634	-13.83	66.49	0.04
166	SLU 63	1648	10	7602	-13.5	66.15	0.04
166	SLU 64	1468	10	7156	-13.14	59.45	0.04
166	SLU 65	1455	9	7103	-12.59	58.87	0.04
166	SLU 66	1527	10	7308	-13.44	61.79	0.04
166	SLU 67	1519	10	7276	-13.11	61.45	0.04
166	SLU 68	1502	9	7207	-12.77	60.73	0.04
166	SLU 69	1575	10	7412	-13.63	63.65	0.04
166	SLU 70	1567	10	7380	-13.3	63.31	0.04
166	SLU 71	1563	10	7365	-13.51	63.17	0.04
166	SLU 72	1555	10	7333	-13.18	62.82	0.04
166	SLU 73	1718	10	7848	-13.81	68.86	0.04
166	SLU 74	1791	11	8053	-14.67	71.78	0.04
166	SLU 75	1783	11	8021	-14.34	71.43	0.04
166	SLU 76	1766	10	7953	-14	70.71	0.04
166	SLU 77	1838	11	8158	-14.85	73.64	0.04
166	SLU 78	1830	11	8126	-14.52	73.29	0.04
166	SLU 79	1827	11	8110	-14.73	73.16	0.04
166	SLU 80	1819	11	8078	-14.4	72.81	0.04
166	SLU 81	1844	11	8221	-14.89	73.72	0.04
166	SLU 82	1836	11	8189	-14.56	73.37	0.04
166	SLU 83	1892	11	8325	-15.08	75.58	0.04
166	SLU 84	1884	11	8293	-14.74	75.23	0.04
166	SLE RA 1	1077	7	5353	-9.83	43.73	0.03
166	SLE RA 2	1068	7	5317	-9.47	43.35	0.03
166	SLE RA 3	1117	8	5454	-10.04	45.3	0.03
166	SLE RA 4	1111	7	5433	-9.82	45.07	0.03
166	SLE RA 5	1100	7	5387	-9.59	44.59	0.03
166	SLE RA 6	1149	8	5524	-10.16	46.54	0.03
166	SLE RA 7	1143	7	5502	-9.94	46.31	0.03
166	SLE RA 8	1141	8	5492	-10.08	46.21	0.03
166	SLE RA 9	1135	7	5471	-9.86	45.98	0.03
166	SLE RA 10	1244	8	5814	-10.28	50.01	0.03
166	SLE RA 11	1292	8	5951	-10.86	51.96	0.03
166	SLE RA 12	1287	8	5929	-10.63	51.72	0.03
166	SLE RA 13	1276	8	5884	-10.41	51.24	0.03
166	SLE RA 14	1324	8	6020	-10.98	53.2	0.03
166	SLE RA 15	1319	8	5999	-10.76	52.96	0.03
166	SLE RA 16	1316	8	5989	-10.9	52.87	0.03
166	SLE RA 17	1311	8	5968	-10.68	52.64	0.03

Nodo	Cont.	Reazione a traslazione			Reazione a rotazione		
Ind.	N.br.	x	y	z	x	y	z
166	SLE RA 18	1328	8	6063	-11	53.25	0.03
166	SLE RA 19	1323	8	6041	-10.78	53.01	0.03
166	SLE RA 20	1360	8	6132	-11.12	54.49	0.03
166	SLE RA 21	1355	8	6111	-10.9	54.25	0.03
166	SLE FR 1	1077	7	5353	-9.83	43.73	0.03
166	SLE FR 2	1075	7	5346	-9.76	43.66	0.03
166	SLE FR 3	1090	8	5381	-9.88	44.23	0.03
166	SLE FR 4	1151	8	5559	-10.11	46.51	0.03
166	SLE FR 5	1165	8	5594	-10.23	47.08	0.03
166	SLE FR 6	1203	8	5708	-10.42	48.49	0.03
166	SLE QP 1	1077	7	5353	-9.83	43.73	0.03
166	SLE QP 2	1152	8	5566	-10.18	46.59	0.03
166	SLD 1	2046	13	6703	-17.77	80.11	0.04
166	SLD 2	2046	13	6703	-17.77	80.11	0.04
166	SLD 3	1955	10	6630	-9.52	76.77	0.03
166	SLD 4	1955	10	6630	-9.52	76.77	0.03
166	SLD 5	1559	14	6017	-24.98	61.7	0.05
166	SLD 6	1559	14	6017	-24.98	61.7	0.05
166	SLD 7	1255	4	5775	2.53	50.58	0.01
166	SLD 8	1255	4	5775	2.53	50.58	0.01
166	SLD 9	1050	12	5357	-22.9	42.59	0.05
166	SLD 10	1050	12	5357	-22.9	42.59	0.05
166	SLD 11	746	1	5114	4.61	31.47	0
166	SLD 12	746	1	5114	4.61	31.47	0
166	SLD 13	350	5	4501	-10.85	16.4	0.03
166	SLD 14	350	5	4501	-10.85	16.4	0.03
166	SLD 15	259	2	4428	-2.6	13.07	0.01
166	SLD 16	259	2	4428	-2.6	13.07	0.01
166	SLV 1	3247	21	8233	-28.88	125.15	0.06
166	SLV 2	3247	21	8233	-28.88	125.15	0.06
166	SLV 3	3024	14	8053	-7.86	116.95	0.03
166	SLV 4	3024	14	8053	-7.86	116.95	0.03
166	SLV 5	2119	23	6639	-47.67	82.6	0.09
166	SLV 6	2119	23	6639	-47.67	82.6	0.09
166	SLV 7	1376	-1	6039	22.39	55.25	-0.03
166	SLV 8	1376	-1	6039	22.39	55.25	-0.03
166	SLV 9	929	17	5093	-42.76	37.92	0.08
166	SLV 10	929	17	5093	-42.76	37.92	0.08
166	SLV 11	186	-7	4492	27.3	10.57	-0.04
166	SLV 12	186	-7	4492	27.3	10.57	-0.04
166	SLV 13	-719	2	3078	-12.51	-23.77	0.03
166	SLV 14	-719	2	3078	-12.51	-23.77	0.03
166	SLV 15	-942	-6	2898	8.51	-31.98	-0.01
166	SLV 16	-942	-6	2898	8.51	-31.98	-0.01
167	SLU 1	830	20	4511	-16.39	28.77	0.04
167	SLU 2	817	19	4474	-15.61	28.29	0.04
167	SLU 3	885	21	4632	-16.94	30.71	0.04
167	SLU 4	877	20	4609	-16.47	30.42	0.04
167	SLU 5	862	19	4557	-15.96	29.87	0.04
167	SLU 6	930	21	4715	-17.28	32.29	0.05
167	SLU 7	922	20	4692	-16.82	32	0.04
167	SLU 8	920	21	4677	-17.08	31.94	0.04
167	SLU 9	912	20	4654	-16.61	31.65	0.04
167	SLU 10	1052	22	5152	-17.76	36.43	0.05
167	SLU 11	1121	23	5310	-19.08	38.86	0.05
167	SLU 12	1113	23	5288	-18.62	38.57	0.05
167	SLU 13	1097	22	5235	-18.1	38.02	0.05
167	SLU 14	1166	24	5393	-19.42	40.44	0.05
167	SLU 15	1158	23	5371	-18.96	40.15	0.05
167	SLU 16	1156	23	5355	-19.22	40.09	0.05
167	SLU 17	1148	23	5333	-18.75	39.79	0.05
167	SLU 18	1167	24	5480	-19.45	40.41	0.05
167	SLU 19	1159	23	5458	-18.98	40.12	0.05
167	SLU 20	1212	24	5563	-19.79	42	0.05
167	SLU 21	1204	24	5541	-19.33	41.7	0.05
167	SLU 22	1042	23	5125	-18.57	36.1	0.05
167	SLU 23	1028	22	5088	-17.79	35.61	0.05
167	SLU 24	1097	23	5246	-19.11	38.04	0.05
167	SLU 25	1089	23	5224	-18.65	37.74	0.05
167	SLU 26	1073	22	5171	-18.13	37.19	0.05
167	SLU 27	1142	24	5329	-19.46	39.62	0.05
167	SLU 28	1134	23	5307	-18.99	39.33	0.05
167	SLU 29	1131	23	5291	-19.25	39.26	0.05
167	SLU 30	1123	23	5269	-18.79	38.97	0.05
167	SLU 31	1264	24	5767	-19.93	43.76	0.05
167	SLU 32	1332	26	5925	-21.26	46.18	0.06
167	SLU 33	1324	25	5902	-20.79	45.89	0.06
167	SLU 34	1309	25	5849	-20.27	45.34	0.05
167	SLU 35	1377	26	6007	-21.6	47.77	0.06
167	SLU 36	1369	26	5985	-21.13	47.47	0.06
167	SLU 37	1367	26	5969	-21.39	47.41	0.06
167	SLU 38	1359	26	5947	-20.93	47.12	0.06
167	SLU 39	1378	26	6095	-21.63	47.74	0.06
167	SLU 40	1370	26	6072	-21.16	47.45	0.06
167	SLU 41	1423	27	6177	-21.97	49.32	0.06
167	SLU 42	1415	26	6155	-21.5	49.03	0.06
167	SLU 43	1007	25	5654	-20.56	34.9	0.05
167	SLU 44	993	24	5616	-19.79	34.41	0.05
167	SLU 45	1062	26	5774	-21.11	36.83	0.06
167	SLU 46	1054	25	5752	-20.65	36.54	0.05

Nodo	Cont.	Reazione a traslazione			Reazione a rotazione		
Ind.	N.br.	x	y	z	x	y	z
167	SLU 47	1038	24	5699	-20.13	35.99	0.05
167	SLU 48	1107	26	5857	-21.45	38.41	0.06
167	SLU 49	1099	25	5835	-20.99	38.12	0.06
167	SLU 50	1097	26	5819	-21.25	38.06	0.06
167	SLU 51	1089	25	5797	-20.78	37.77	0.05
167	SLU 52	1229	27	6295	-21.93	42.56	0.06
167	SLU 53	1298	28	6453	-23.25	44.98	0.06
167	SLU 54	1289	28	6431	-22.79	44.69	0.06
167	SLU 55	1274	27	6378	-22.27	44.14	0.06
167	SLU 56	1342	29	6536	-23.6	46.56	0.06
167	SLU 57	1334	28	6514	-23.13	46.27	0.06
167	SLU 58	1332	28	6498	-23.39	46.21	0.06
167	SLU 59	1324	28	6475	-22.92	45.91	0.06
167	SLU 60	1343	29	6623	-23.62	46.53	0.06
167	SLU 61	1335	28	6601	-23.16	46.24	0.06
167	SLU 62	1388	29	6706	-23.96	48.12	0.06
167	SLU 63	1380	29	6683	-23.5	47.82	0.06
167	SLU 64	1218	28	6268	-22.74	42.22	0.06
167	SLU 65	1205	27	6231	-21.96	41.73	0.06
167	SLU 66	1273	28	6389	-23.29	44.16	0.06
167	SLU 67	1265	28	6366	-22.82	43.87	0.06
167	SLU 68	1250	27	6314	-22.3	43.31	0.06
167	SLU 69	1318	29	6472	-23.63	45.74	0.06
167	SLU 70	1310	28	6449	-23.16	45.45	0.06
167	SLU 71	1308	28	6434	-23.42	45.38	0.06
167	SLU 72	1300	28	6411	-22.96	45.09	0.06
167	SLU 73	1440	29	6909	-24.1	49.88	0.06
167	SLU 74	1509	31	7067	-25.43	52.3	0.07
167	SLU 75	1501	30	7045	-24.96	52.01	0.07
167	SLU 76	1485	30	6992	-24.45	51.46	0.06
167	SLU 77	1554	31	7150	-25.77	53.89	0.07
167	SLU 78	1546	31	7128	-25.31	53.59	0.07
167	SLU 79	1544	31	7112	-25.57	53.53	0.07
167	SLU 80	1536	31	7090	-25.1	53.24	0.07
167	SLU 81	1555	31	7237	-25.8	53.86	0.07
167	SLU 82	1547	31	7215	-25.33	53.57	0.07
167	SLU 83	1600	32	7320	-26.14	55.44	0.07
167	SLU 84	1592	31	7298	-25.67	55.15	0.07
167	SLE RA 1	891	21	4686	-17.01	30.87	0.04
167	SLE RA 2	882	20	4662	-16.49	30.54	0.04
167	SLE RA 3	927	21	4767	-17.38	32.16	0.05
167	SLE RA 4	922	21	4752	-17.07	31.96	0.05
167	SLE RA 5	912	20	4717	-16.72	31.6	0.04
167	SLE RA 6	957	21	4822	-17.61	33.21	0.05
167	SLE RA 7	952	21	4807	-17.3	33.02	0.05
167	SLE RA 8	950	21	4797	-17.47	32.98	0.05
167	SLE RA 9	945	21	4782	-17.16	32.78	0.05
167	SLE RA 10	1039	22	5114	-17.92	35.97	0.05
167	SLE RA 11	1084	23	5219	-18.81	37.59	0.05
167	SLE RA 12	1079	22	5205	-18.5	37.4	0.05
167	SLE RA 13	1069	22	5169	-18.15	37.03	0.05
167	SLE RA 14	1114	23	5275	-19.03	38.64	0.05
167	SLE RA 15	1109	23	5260	-18.72	38.45	0.05
167	SLE RA 16	1108	23	5249	-18.9	38.41	0.05
167	SLE RA 17	1102	23	5234	-18.59	38.21	0.05
167	SLE RA 18	1115	23	5333	-19.05	38.63	0.05
167	SLE RA 19	1110	23	5318	-18.74	38.43	0.05
167	SLE RA 20	1145	23	5388	-19.28	39.68	0.05
167	SLE RA 21	1140	23	5373	-18.97	39.49	0.05
167	SLE FR 1	891	21	4686	-17.01	30.87	0.04
167	SLE FR 2	889	21	4682	-16.91	30.8	0.04
167	SLE FR 3	903	21	4709	-17.1	31.29	0.04
167	SLE FR 4	956	21	4875	-17.52	33.13	0.05
167	SLE FR 5	970	22	4902	-17.72	33.62	0.05
167	SLE FR 6	1003	22	5010	-18.03	34.75	0.05
167	SLE QP 1	891	21	4686	-17.01	30.87	0.04
167	SLE QP 2	958	21	4880	-17.62	33.2	0.05
167	SLD 1	1845	33	5728	-30.06	64.89	0.07
167	SLD 2	1845	33	5728	-30.06	64.89	0.07
167	SLD 3	1754	23	5633	-15.5	61.53	0.05
167	SLD 4	1754	23	5633	-15.5	61.53	0.05
167	SLD 5	1362	39	5279	-43.45	47.8	0.09
167	SLD 6	1362	39	5279	-43.45	47.8	0.09
167	SLD 7	1058	7	4961	5.1	36.6	0.01
167	SLD 8	1058	7	4961	5.1	36.6	0.01
167	SLD 9	857	35	4799	-40.35	29.79	0.09
167	SLD 10	857	35	4799	-40.35	29.79	0.09
167	SLD 11	554	3	4481	8.2	18.59	0
167	SLD 12	554	3	4481	8.2	18.59	0
167	SLD 13	162	20	4128	-19.75	4.86	0.05
167	SLD 14	162	20	4128	-19.75	4.86	0.05
167	SLD 15	71	10	4033	-5.18	1.5	0.02
167	SLD 16	71	10	4033	-5.18	1.5	0.02
167	SLV 1	3036	49	6873	-48.44	107.48	0.11
167	SLV 2	3036	49	6873	-48.44	107.48	0.11
167	SLV 3	2813	25	6634	-11.27	99.24	0.04
167	SLV 4	2813	25	6634	-11.27	99.24	0.04
167	SLV 5	1919	67	5841	-83.24	67.98	0.17
167	SLV 6	1919	67	5841	-83.24	67.98	0.17
167	SLV 7	1177	-15	5044	40.66	40.51	-0.06

Nodo	Cont.	Reazione a traslazione			Reazione a rotazione		
Ind.	N.br.	x	y	z	x	y	z
167	SLV 8	1177	-15	5044	40.66	40.51	-0.06
167	SLV 9	739	57	4717	-75.9	25.88	0.15
167	SLV 10	739	57	4717	-75.9	25.88	0.15
167	SLV 11	-3	-24	3920	47.99	-1.59	-0.07
167	SLV 12	-3	-24	3920	47.99	-1.59	-0.07
167	SLV 13	-897	18	3127	-23.98	-32.85	0.05
167	SLV 14	-897	18	3127	-23.98	-32.85	0.05
167	SLV 15	-1120	-6	2888	13.19	-41.09	-0.02
167	SLV 16	-1120	-6	2888	13.19	-41.09	-0.02
168	SLU 1	926	30	3974	-22.63	37.73	0.07
168	SLU 2	908	29	3949	-21.74	37.03	0.07
168	SLU 3	987	31	4070	-23.4	40.12	0.07
168	SLU 4	977	30	4055	-22.87	39.7	0.07
168	SLU 5	958	29	4014	-22.23	38.93	0.07
168	SLU 6	1037	31	4135	-23.89	42.03	0.07
168	SLU 7	1026	31	4120	-23.36	41.61	0.07
168	SLU 8	1025	31	4105	-23.61	41.54	0.07
168	SLU 9	1014	30	4089	-23.07	41.12	0.07
168	SLU 10	1152	33	4576	-24.72	46.3	0.08
168	SLU 11	1231	35	4697	-26.38	49.4	0.08
168	SLU 12	1221	34	4681	-25.84	48.98	0.08
168	SLU 13	1202	33	4641	-25.21	48.2	0.08
168	SLU 14	1281	35	4762	-26.87	51.3	0.08
168	SLU 15	1270	35	4746	-26.33	50.88	0.08
168	SLU 16	1269	35	4731	-26.59	50.81	0.08
168	SLU 17	1258	34	4716	-26.05	50.39	0.08
168	SLU 18	1275	35	4869	-26.89	50.98	0.08
168	SLU 19	1264	35	4854	-26.35	50.56	0.08
168	SLU 20	1324	36	4935	-27.38	52.88	0.09
168	SLU 21	1313	35	4919	-26.84	52.46	0.08
168	SLU 22	1149	34	4527	-25.66	46.3	0.08
168	SLU 23	1131	33	4502	-24.77	45.6	0.08
168	SLU 24	1210	35	4623	-26.43	48.69	0.08
168	SLU 25	1200	34	4608	-25.89	48.27	0.08
168	SLU 26	1181	33	4567	-25.25	47.5	0.08
168	SLU 27	1260	35	4688	-26.92	50.6	0.08
168	SLU 28	1249	35	4673	-26.38	50.18	0.08
168	SLU 29	1248	35	4657	-26.64	50.11	0.08
168	SLU 30	1237	34	4642	-26.1	49.69	0.08
168	SLU 31	1376	37	5128	-27.74	54.87	0.09
168	SLU 32	1455	39	5249	-29.41	57.97	0.09
168	SLU 33	1444	38	5234	-28.87	57.54	0.09
168	SLU 34	1425	37	5194	-28.23	56.77	0.09
168	SLU 35	1504	39	5314	-29.9	59.87	0.09
168	SLU 36	1493	39	5299	-29.36	59.45	0.09
168	SLU 37	1492	39	5284	-29.62	59.38	0.09
168	SLU 38	1481	38	5269	-29.08	58.96	0.09
168	SLU 39	1498	39	5422	-29.91	59.55	0.09
168	SLU 40	1487	39	5407	-29.38	59.12	0.09
168	SLU 41	1547	40	5487	-30.4	61.45	0.1
168	SLU 42	1537	39	5472	-29.87	61.03	0.09
168	SLU 43	1127	37	4977	-28.39	46.11	0.09
168	SLU 44	1109	36	4952	-27.49	45.41	0.09
168	SLU 45	1188	38	5073	-29.16	48.51	0.09
168	SLU 46	1178	38	5058	-28.62	48.08	0.09
168	SLU 47	1159	37	5017	-27.98	47.31	0.09
168	SLU 48	1238	39	5138	-29.64	50.41	0.09
168	SLU 49	1227	38	5123	-29.11	49.99	0.09
168	SLU 50	1226	39	5107	-29.36	49.92	0.09
168	SLU 51	1215	38	5092	-28.83	49.5	0.09
168	SLU 52	1354	40	5579	-30.47	54.68	0.1
168	SLU 53	1433	42	5699	-32.13	57.78	0.1
168	SLU 54	1422	42	5684	-31.6	57.36	0.1
168	SLU 55	1403	41	5644	-30.96	56.59	0.1
168	SLU 56	1482	43	5764	-32.62	59.68	0.1
168	SLU 57	1471	42	5749	-32.09	59.26	0.1
168	SLU 58	1470	43	5734	-32.34	59.19	0.1
168	SLU 59	1459	42	5719	-31.8	58.77	0.1
168	SLU 60	1476	43	5872	-32.64	59.36	0.1
168	SLU 61	1465	42	5857	-32.1	58.94	0.1
168	SLU 62	1525	44	5937	-33.13	61.26	0.1
168	SLU 63	1515	43	5922	-32.59	60.84	0.1
168	SLU 64	1350	41	5530	-31.41	54.68	0.1
168	SLU 65	1333	40	5505	-30.52	53.98	0.1
168	SLU 66	1412	42	5626	-32.18	57.07	0.1
168	SLU 67	1401	42	5610	-31.65	56.65	0.1
168	SLU 68	1382	41	5570	-31.01	55.88	0.1
168	SLU 69	1461	43	5691	-32.67	58.98	0.1
168	SLU 70	1450	42	5675	-32.13	58.56	0.1
168	SLU 71	1449	43	5660	-32.39	58.49	0.1
168	SLU 72	1438	42	5645	-31.85	58.07	0.1
168	SLU 73	1577	44	6131	-33.5	63.25	0.11
168	SLU 74	1656	46	6252	-35.16	66.35	0.11
168	SLU 75	1645	46	6237	-34.62	65.93	0.11
168	SLU 76	1626	45	6196	-33.98	65.15	0.11
168	SLU 77	1705	47	6317	-35.65	68.25	0.11
168	SLU 78	1695	46	6302	-35.11	67.83	0.11
168	SLU 79	1693	47	6287	-35.37	67.76	0.11
168	SLU 80	1683	46	6272	-34.83	67.34	0.11
168	SLU 81	1699	47	6425	-35.67	67.93	0.11

Nodo	Cont.	Reazione a traslazione			Reazione a rotazione		
Ind.	N.br.	x	y	z	x	y	z
168	SLU 82	1688	46	6410	-35.13	67.51	0.11
168	SLU 83	1748	48	6490	-36.16	69.83	0.11
168	SLU 84	1738	47	6475	-35.62	69.41	0.11
168	SLE RA 1	990	31	4132	-23.5	40.18	0.07
168	SLE RA 2	978	30	4116	-22.9	39.71	0.07
168	SLE RA 3	1030	32	4196	-24.01	41.77	0.08
168	SLE RA 4	1023	31	4186	-23.65	41.49	0.07
168	SLE RA 5	1011	31	4159	-23.23	40.98	0.07
168	SLE RA 6	1063	32	4239	-24.34	43.04	0.08
168	SLE RA 7	1056	32	4229	-23.98	42.76	0.08
168	SLE RA 8	1055	32	4219	-24.15	42.72	0.08
168	SLE RA 9	1048	31	4209	-23.79	42.44	0.07
168	SLE RA 10	1141	33	4533	-24.89	45.89	0.08
168	SLE RA 11	1193	34	4614	-26	47.96	0.08
168	SLE RA 12	1186	34	4604	-25.64	47.68	0.08
168	SLE RA 13	1174	33	4577	-25.21	47.16	0.08
168	SLE RA 14	1226	35	4657	-26.32	49.23	0.08
168	SLE RA 15	1219	34	4647	-25.96	48.95	0.08
168	SLE RA 16	1218	34	4637	-26.14	48.9	0.08
168	SLE RA 17	1211	34	4627	-25.78	48.62	0.08
168	SLE RA 18	1222	35	4729	-26.33	49.01	0.08
168	SLE RA 19	1215	34	4719	-25.98	48.73	0.08
168	SLE RA 20	1255	35	4772	-26.66	50.28	0.08
168	SLE RA 21	1248	35	4762	-26.3	50	0.08
168	SLE FR 1	990	31	4132	-23.5	40.18	0.07
168	SLE FR 2	987	31	4129	-23.38	40.08	0.07
168	SLE FR 3	1003	31	4150	-23.63	40.69	0.07
168	SLE FR 4	1057	32	4308	-24.23	42.73	0.08
168	SLE FR 5	1072	32	4329	-24.48	43.34	0.08
168	SLE FR 6	1106	33	4431	-24.92	44.59	0.08
168	SLE QP 1	990	31	4132	-23.5	40.18	0.07
168	SLE QP 2	1059	32	4311	-24.35	42.83	0.08
168	SLD 1	2001	49	4938	-41.35	77.89	0.12
168	SLD 2	2001	49	4938	-41.35	77.89	0.12
168	SLD 3	1909	31	4799	-20.35	74.53	0.07
168	SLD 4	1909	31	4799	-20.35	74.53	0.07
168	SLD 5	1482	65	4710	-61.3	58.44	0.16
168	SLD 6	1482	65	4710	-61.3	58.44	0.16
168	SLD 7	1174	4	4247	8.7	47.25	0
168	SLD 8	1174	4	4247	8.7	47.25	0
168	SLD 9	945	60	4376	-57.4	38.41	0.15
168	SLD 10	945	60	4376	-57.4	38.41	0.15
168	SLD 11	637	-1	3913	12.6	27.22	-0.01
168	SLD 12	637	-1	3913	12.6	27.22	-0.01
168	SLD 13	210	33	3823	-28.34	11.12	0.08
168	SLD 14	210	33	3823	-28.34	11.12	0.08
168	SLD 15	118	14	3684	-7.34	7.76	0.03
168	SLD 16	118	14	3684	-7.34	7.76	0.03
168	SLV 1	3265	75	5792	-66.63	124.98	0.18
168	SLV 2	3265	75	5792	-66.63	124.98	0.18
168	SLV 3	3040	28	5441	-12.99	116.78	0.06
168	SLV 4	3040	28	5441	-12.99	116.78	0.06
168	SLV 5	2063	116	5289	-118.38	79.91	0.3
168	SLV 6	2063	116	5289	-118.38	79.91	0.3
168	SLV 7	1312	-40	4117	60.4	52.57	-0.12
168	SLV 8	1312	-40	4117	60.4	52.57	-0.12
168	SLV 9	807	104	4505	-109.1	33.08	0.27
168	SLV 10	807	104	4505	-109.1	33.08	0.27
168	SLV 11	56	-52	3334	69.68	5.74	-0.14
168	SLV 12	56	-52	3334	69.68	5.74	-0.14
168	SLV 13	-921	36	3182	-35.7	-31.12	0.09
168	SLV 14	-921	36	3182	-35.7	-31.12	0.09
168	SLV 15	-1147	-11	2830	17.93	-39.33	-0.03
168	SLV 16	-1147	-11	2830	17.93	-39.33	-0.03
169	SLU 1	927	36	3586	-27.51	31.66	0.1
169	SLU 2	907	35	3568	-26.57	30.96	0.1
169	SLU 3	990	37	3663	-28.45	33.87	0.1
169	SLU 4	978	37	3652	-27.89	33.45	0.1
169	SLU 5	958	36	3620	-27.17	32.74	0.1
169	SLU 6	1041	38	3715	-29.05	35.64	0.11
169	SLU 7	1029	37	3704	-28.49	35.22	0.11
169	SLU 8	1028	38	3690	-28.71	35.21	0.11
169	SLU 9	1016	37	3679	-28.15	34.79	0.1
169	SLU 10	1145	40	4161	-30.22	39.15	0.11
169	SLU 11	1228	42	4256	-32.1	42.06	0.12
169	SLU 12	1216	41	4245	-31.53	41.64	0.12
169	SLU 13	1195	41	4213	-30.82	40.93	0.11
169	SLU 14	1279	43	4308	-32.7	43.83	0.12
169	SLU 15	1267	42	4297	-32.13	43.41	0.12
169	SLU 16	1266	42	4283	-32.36	43.4	0.12
169	SLU 17	1254	42	4272	-31.79	42.98	0.12
169	SLU 18	1267	43	4433	-32.72	43.36	0.12
169	SLU 19	1254	42	4422	-32.16	42.94	0.12
169	SLU 20	1317	44	4485	-33.32	45.14	0.12
169	SLU 21	1305	43	4474	-32.76	44.72	0.12
169	SLU 22	1147	41	4097	-31.22	39.25	0.11
169	SLU 23	1127	40	4079	-30.27	38.55	0.11
169	SLU 24	1210	42	4174	-32.16	41.45	0.12
169	SLU 25	1198	41	4163	-31.59	41.03	0.12
169	SLU 26	1178	41	4131	-30.87	40.32	0.11

Nodo	Cont.	Reazione a traslazione			Reazione a rotazione		
Ind.	N.br.	x	y	z	x	y	z
169	SLU 27	1261	43	4226	-32.75	43.22	0.12
169	SLU 28	1249	42	4215	-32.19	42.8	0.12
169	SLU 29	1248	42	4201	-32.41	42.79	0.12
169	SLU 30	1236	42	4190	-31.85	42.37	0.12
169	SLU 31	1365	45	4672	-33.92	46.74	0.13
169	SLU 32	1448	47	4767	-35.8	49.64	0.13
169	SLU 33	1436	46	4756	-35.24	49.22	0.13
169	SLU 34	1415	45	4724	-34.52	48.51	0.13
169	SLU 35	1499	48	4819	-36.4	51.42	0.13
169	SLU 36	1487	47	4808	-35.83	51	0.13
169	SLU 37	1486	47	4794	-36.06	50.98	0.13
169	SLU 38	1474	47	4783	-35.49	50.56	0.13
169	SLU 39	1487	48	4944	-36.42	50.95	0.13
169	SLU 40	1474	47	4933	-35.86	50.53	0.13
169	SLU 41	1537	49	4996	-37.02	52.72	0.14
169	SLU 42	1525	48	4985	-36.46	52.3	0.14
169	SLU 43	1130	45	4487	-34.5	38.56	0.13
169	SLU 44	1110	44	4469	-33.56	37.86	0.12
169	SLU 45	1193	46	4564	-35.44	40.77	0.13
169	SLU 46	1181	46	4553	-34.87	40.35	0.13
169	SLU 47	1160	45	4521	-34.16	39.63	0.13
169	SLU 48	1244	47	4616	-36.04	42.54	0.13
169	SLU 49	1232	46	4605	-35.47	42.12	0.13
169	SLU 50	1231	47	4591	-35.7	42.11	0.13
169	SLU 51	1219	46	4580	-35.13	41.69	0.13
169	SLU 52	1347	49	5062	-37.2	46.05	0.14
169	SLU 53	1431	51	5156	-39.08	48.96	0.14
169	SLU 54	1419	50	5146	-38.52	48.54	0.14
169	SLU 55	1398	50	5114	-37.8	47.82	0.14
169	SLU 56	1481	52	5209	-39.68	50.73	0.15
169	SLU 57	1469	51	5198	-39.12	50.31	0.14
169	SLU 58	1469	51	5184	-39.34	50.3	0.14
169	SLU 59	1457	51	5173	-38.78	49.88	0.14
169	SLU 60	1469	52	5334	-39.71	50.26	0.15
169	SLU 61	1457	51	5323	-39.14	49.84	0.14
169	SLU 62	1520	53	5386	-40.3	52.03	0.15
169	SLU 63	1508	52	5375	-39.74	51.61	0.15
169	SLU 64	1350	50	4998	-38.2	46.15	0.14
169	SLU 65	1330	49	4980	-37.26	45.45	0.14
169	SLU 66	1413	51	5074	-39.14	48.35	0.14
169	SLU 67	1401	51	5064	-38.57	47.93	0.14
169	SLU 68	1380	50	5032	-37.86	47.22	0.14
169	SLU 69	1464	52	5127	-39.74	50.12	0.15
169	SLU 70	1452	51	5116	-39.17	49.7	0.14
169	SLU 71	1451	52	5102	-39.4	49.69	0.15
169	SLU 72	1439	51	5091	-38.83	49.27	0.14
169	SLU 73	1567	54	5572	-40.9	53.64	0.15
169	SLU 74	1651	56	5667	-42.79	56.54	0.16
169	SLU 75	1639	55	5657	-42.22	56.12	0.16
169	SLU 76	1618	55	5624	-41.5	55.41	0.15
169	SLU 77	1701	57	5719	-43.38	58.31	0.16
169	SLU 78	1689	56	5709	-42.82	57.89	0.16
169	SLU 79	1689	56	5694	-43.04	57.88	0.16
169	SLU 80	1677	56	5684	-42.48	57.46	0.16
169	SLU 81	1689	57	5844	-43.41	57.85	0.16
169	SLU 82	1677	56	5834	-42.84	57.43	0.16
169	SLU 83	1740	58	5896	-44.01	59.62	0.16
169	SLU 84	1728	57	5886	-43.44	59.2	0.16
169	SLE RA 1	990	37	3732	-28.57	33.83	0.11
169	SLE RA 2	976	37	3720	-27.94	33.36	0.1
169	SLE RA 3	1032	38	3783	-29.2	35.3	0.11
169	SLE RA 4	1024	38	3776	-28.82	35.02	0.11
169	SLE RA 5	1010	37	3755	-28.34	34.54	0.1
169	SLE RA 6	1066	39	3818	-29.6	36.48	0.11
169	SLE RA 7	1058	38	3811	-29.22	36.2	0.11
169	SLE RA 8	1057	38	3801	-29.37	36.19	0.11
169	SLE RA 9	1049	38	3794	-28.99	35.91	0.11
169	SLE RA 10	1135	40	4115	-30.37	38.82	0.11
169	SLE RA 11	1190	41	4179	-31.63	40.76	0.12
169	SLE RA 12	1182	41	4171	-31.25	40.48	0.12
169	SLE RA 13	1169	40	4150	-30.77	40.01	0.11
169	SLE RA 14	1224	42	4213	-32.03	41.94	0.12
169	SLE RA 15	1216	42	4206	-31.65	41.66	0.12
169	SLE RA 16	1216	42	4197	-31.8	41.65	0.12
169	SLE RA 17	1208	41	4189	-31.42	41.37	0.12
169	SLE RA 18	1216	42	4297	-32.04	41.63	0.12
169	SLE RA 19	1208	42	4289	-31.67	41.35	0.12
169	SLE RA 20	1250	42	4331	-32.44	42.81	0.12
169	SLE RA 21	1242	42	4324	-32.07	42.53	0.12
169	SLE FR 1	990	37	3732	-28.57	33.83	0.11
169	SLE FR 2	987	37	3730	-28.45	33.74	0.1
169	SLE FR 3	1003	38	3746	-28.73	34.3	0.11
169	SLE FR 4	1055	39	3899	-29.49	36.08	0.11
169	SLE FR 5	1071	39	3915	-29.77	36.64	0.11
169	SLE FR 6	1103	40	4014	-30.31	37.73	0.11
169	SLE QP 1	990	37	3732	-28.57	33.83	0.11
169	SLE QP 2	1058	39	3901	-29.61	36.17	0.11
169	SLD 1	2024	61	4360	-50.2	70.51	0.17
169	SLD 2	2024	61	4360	-50.2	70.51	0.17
169	SLD 3	1927	35	4188	-23.75	67.02	0.1

Nodo	Cont.	Reazione a traslazione			Reazione a rotazione		
Ind.	N.br.	x	y	z	x	y	z
169	SLD 4	1927	35	4188	-23.75	67.02	0.1
169	SLD 5	1494	84	4300	-75.92	51.77	0.24
169	SLD 6	1494	84	4300	-75.92	51.77	0.24
169	SLD 7	1172	-1	3726	12.28	40.13	-0.01
169	SLD 8	1172	-1	3726	12.28	40.13	-0.01
169	SLD 9	943	79	4077	-71.5	32.21	0.23
169	SLD 10	943	79	4077	-71.5	32.21	0.23
169	SLD 11	622	-7	3503	16.69	20.57	-0.02
169	SLD 12	622	-7	3503	16.69	20.57	-0.02
169	SLD 13	188	42	3615	-35.48	5.32	0.12
169	SLD 14	188	42	3615	-35.48	5.32	0.12
169	SLD 15	92	17	3443	-9.02	1.83	0.05
169	SLD 16	92	17	3443	-9.02	1.83	0.05
169	SLV 1	3320	93	4992	-80.97	116.64	0.27
169	SLV 2	3320	93	4992	-80.97	116.64	0.27
169	SLV 3	3085	28	4555	-13.36	108.11	0.07
169	SLV 4	3085	28	4555	-13.36	108.11	0.07
169	SLV 5	2093	154	4891	-147.55	73.24	0.45
169	SLV 6	2093	154	4891	-147.55	73.24	0.45
169	SLV 7	1310	-64	3435	77.79	44.82	-0.19
169	SLV 8	1310	-64	3435	77.79	44.82	-0.19
169	SLV 9	806	141	4368	-137.02	27.52	0.41
169	SLV 10	806	141	4368	-137.02	27.52	0.41
169	SLV 11	23	-77	2911	88.32	-0.9	-0.23
169	SLV 12	23	-77	2911	88.32	-0.9	-0.23
169	SLV 13	-970	49	3248	-45.86	-35.78	0.14
169	SLV 14	-970	49	3248	-45.86	-35.78	0.14
169	SLV 15	-1205	-16	2811	21.74	-44.3	-0.05
169	SLV 16	-1205	-16	2811	21.74	-44.3	-0.05
170	SLU 1	1092	39	3321	-31.03	42.49	0.13
170	SLU 2	1067	38	3306	-30.09	41.55	0.12
170	SLU 3	1164	41	3384	-32.09	45.21	0.13
170	SLU 4	1149	40	3376	-31.52	44.65	0.13
170	SLU 5	1124	39	3349	-30.76	43.69	0.13
170	SLU 6	1221	41	3427	-32.76	47.35	0.13
170	SLU 7	1206	41	3418	-32.2	46.79	0.13
170	SLU 8	1206	41	3406	-32.38	46.76	0.13
170	SLU 9	1191	40	3397	-31.82	46.2	0.13
170	SLU 10	1322	44	3880	-34.23	51.1	0.14
170	SLU 11	1419	46	3958	-36.23	54.75	0.15
170	SLU 12	1404	45	3949	-35.67	54.19	0.15
170	SLU 13	1379	45	3922	-34.91	53.23	0.14
170	SLU 14	1476	47	4001	-36.91	56.89	0.15
170	SLU 15	1461	46	3992	-36.35	56.33	0.15
170	SLU 16	1461	46	3980	-36.53	56.3	0.15
170	SLU 17	1446	46	3971	-35.96	55.74	0.15
170	SLU 18	1457	47	4140	-36.95	56.12	0.15
170	SLU 19	1442	46	4131	-36.39	55.56	0.15
170	SLU 20	1513	48	4183	-37.63	58.26	0.15
170	SLU 21	1498	47	4174	-37.06	57.7	0.15
170	SLU 22	1333	45	3805	-35.23	51.54	0.14
170	SLU 23	1308	44	3791	-34.29	50.61	0.14
170	SLU 24	1404	46	3869	-36.29	54.26	0.15
170	SLU 25	1390	45	3860	-35.73	53.7	0.15
170	SLU 26	1365	45	3833	-34.97	52.74	0.14
170	SLU 27	1461	47	3912	-36.97	56.4	0.15
170	SLU 28	1446	46	3903	-36.4	55.84	0.15
170	SLU 29	1446	46	3891	-36.58	55.81	0.15
170	SLU 30	1431	46	3882	-36.02	55.25	0.15
170	SLU 31	1563	49	4364	-38.44	60.15	0.16
170	SLU 32	1659	51	4443	-40.44	63.81	0.17
170	SLU 33	1645	51	4434	-39.87	63.25	0.16
170	SLU 34	1619	50	4407	-39.11	62.29	0.16
170	SLU 35	1716	52	4485	-41.11	65.94	0.17
170	SLU 36	1701	52	4476	-40.55	65.38	0.17
170	SLU 37	1701	52	4464	-40.73	65.36	0.17
170	SLU 38	1686	51	4455	-40.17	64.8	0.17
170	SLU 39	1697	52	4625	-41.15	65.17	0.17
170	SLU 40	1682	52	4616	-40.59	64.61	0.17
170	SLU 41	1754	53	4667	-41.83	67.31	0.17
170	SLU 42	1739	53	4659	-41.27	66.75	0.17
170	SLU 43	1338	49	4151	-38.9	52.13	0.16
170	SLU 44	1313	48	4136	-37.96	51.19	0.16
170	SLU 45	1409	51	4215	-39.96	54.85	0.16
170	SLU 46	1394	50	4206	-39.39	54.29	0.16
170	SLU 47	1369	49	4179	-38.63	53.33	0.16
170	SLU 48	1466	51	4257	-40.63	56.99	0.17
170	SLU 49	1451	51	4248	-40.07	56.43	0.16
170	SLU 50	1451	51	4236	-40.25	56.4	0.16
170	SLU 51	1436	50	4227	-39.68	55.84	0.16
170	SLU 52	1568	54	4710	-42.1	60.74	0.17
170	SLU 53	1664	56	4788	-44.1	64.39	0.18
170	SLU 54	1649	55	4779	-43.54	63.83	0.18
170	SLU 55	1624	54	4752	-42.78	62.88	0.18
170	SLU 56	1721	57	4831	-44.78	66.53	0.18
170	SLU 57	1706	56	4822	-44.21	65.97	0.18
170	SLU 58	1706	56	4810	-44.39	65.94	0.18
170	SLU 59	1691	56	4801	-43.83	65.39	0.18
170	SLU 60	1702	57	4970	-44.82	65.76	0.18
170	SLU 61	1687	56	4961	-44.25	65.2	0.18

Nodo	Cont.	Reazione a traslazione			Reazione a rotazione		
Ind.	N.br.	x	y	z	x	y	z
170	SLU 62	1758	58	5013	-45.49	67.9	0.19
170	SLU 63	1744	57	5004	-44.93	67.34	0.18
170	SLU 64	1578	55	4635	-43.1	61.18	0.18
170	SLU 65	1553	54	4621	-42.16	60.25	0.17
170	SLU 66	1650	56	4699	-44.16	63.9	0.18
170	SLU 67	1635	55	4690	-43.6	63.34	0.18
170	SLU 68	1610	54	4663	-42.84	62.39	0.18
170	SLU 69	1706	57	4742	-44.84	66.04	0.18
170	SLU 70	1691	56	4733	-44.27	65.48	0.18
170	SLU 71	1691	56	4721	-44.45	65.45	0.18
170	SLU 72	1676	56	4712	-43.89	64.9	0.18
170	SLU 73	1808	59	5194	-46.31	69.79	0.19
170	SLU 74	1905	61	5273	-48.31	73.45	0.2
170	SLU 75	1890	61	5264	-47.74	72.89	0.2
170	SLU 76	1865	60	5237	-46.98	71.93	0.19
170	SLU 77	1961	62	5315	-48.98	75.59	0.2
170	SLU 78	1946	62	5307	-48.42	75.03	0.2
170	SLU 79	1946	62	5294	-48.6	75	0.2
170	SLU 80	1931	61	5285	-48.03	74.44	0.2
170	SLU 81	1942	62	5455	-49.02	74.82	0.2
170	SLU 82	1927	62	5446	-48.46	74.26	0.2
170	SLU 83	1999	63	5497	-49.7	76.95	0.2
170	SLU 84	1984	62	5489	-49.13	76.39	0.2
170	SLE RA 1	1161	41	3459	-32.23	45.07	0.13
170	SLE RA 2	1144	40	3449	-31.6	44.45	0.13
170	SLE RA 3	1209	42	3502	-32.94	46.89	0.13
170	SLE RA 4	1199	41	3496	-32.56	46.52	0.13
170	SLE RA 5	1182	41	3478	-32.05	45.88	0.13
170	SLE RA 6	1247	42	3530	-33.39	48.31	0.14
170	SLE RA 7	1237	42	3524	-33.01	47.94	0.14
170	SLE RA 8	1237	42	3516	-33.13	47.92	0.14
170	SLE RA 9	1227	42	3510	-32.75	47.55	0.13
170	SLE RA 10	1314	44	3832	-34.37	50.81	0.14
170	SLE RA 11	1379	45	3884	-35.7	53.25	0.15
170	SLE RA 12	1369	45	3878	-35.32	52.88	0.15
170	SLE RA 13	1352	44	3860	-34.82	52.24	0.14
170	SLE RA 14	1417	46	3912	-36.15	54.68	0.15
170	SLE RA 15	1407	45	3907	-35.77	54.3	0.15
170	SLE RA 16	1406	46	3898	-35.89	54.28	0.15
170	SLE RA 17	1397	45	3893	-35.52	53.91	0.15
170	SLE RA 18	1404	46	4005	-36.18	54.16	0.15
170	SLE RA 19	1394	45	4000	-35.8	53.79	0.15
170	SLE RA 20	1442	46	4034	-36.63	55.59	0.15
170	SLE RA 21	1432	46	4028	-36.25	55.21	0.15
170	SLE FR 1	1161	41	3459	-32.23	45.07	0.13
170	SLE FR 2	1158	41	3457	-32.1	44.95	0.13
170	SLE FR 3	1176	41	3471	-32.41	45.64	0.13
170	SLE FR 4	1231	42	3621	-33.29	47.68	0.14
170	SLE FR 5	1249	43	3634	-33.59	48.37	0.14
170	SLE FR 6	1282	43	3732	-34.2	49.62	0.14
170	SLE QP 1	1161	41	3459	-32.23	45.07	0.13
170	SLE QP 2	1234	42	3623	-33.41	47.8	0.14
170	SLD 1	2263	67	3948	-40.79	85.9	0.22
170	SLD 2	2263	67	3948	-40.79	85.9	0.22
170	SLD 3	2161	36	3762	-10.54	82.26	0.12
170	SLD 4	2161	36	3762	-10.54	82.26	0.12
170	SLD 5	1697	96	4003	-81.51	64.76	0.31
170	SLD 6	1697	96	4003	-81.51	64.76	0.31
170	SLD 7	1357	-6	3382	19.33	52.61	-0.02
170	SLD 8	1357	-6	3382	19.33	52.61	-0.02
170	SLD 9	1110	90	3864	-86.16	42.99	0.29
170	SLD 10	1110	90	3864	-86.16	42.99	0.29
170	SLD 11	771	-11	3243	14.68	30.84	-0.04
170	SLD 12	771	-11	3243	14.68	30.84	-0.04
170	SLD 13	307	48	3484	-56.29	13.34	0.16
170	SLD 14	307	48	3484	-56.29	13.34	0.16
170	SLD 15	205	18	3298	-26.04	9.7	0.06
170	SLD 16	205	18	3298	-26.04	9.7	0.06
170	SLV 1	3645	104	4402	-53.53	137.08	0.34
170	SLV 2	3645	104	4402	-53.53	137.08	0.34
170	SLV 3	3397	26	3929	23.78	128.2	0.08
170	SLV 4	3397	26	3929	23.78	128.2	0.08
170	SLV 5	2334	179	4574	-156.69	88.05	0.58
170	SLV 6	2334	179	4574	-156.69	88.05	0.58
170	SLV 7	1506	-81	2997	100.98	58.45	-0.27
170	SLV 8	1506	-81	2997	100.98	58.45	-0.27
170	SLV 9	961	165	4249	-167.81	37.15	0.54
170	SLV 10	961	165	4249	-167.81	37.15	0.54
170	SLV 11	134	-94	2672	89.86	7.55	-0.31
170	SLV 12	134	-94	2672	89.86	7.55	-0.31
170	SLV 13	-929	59	3317	-90.6	-32.6	0.19
170	SLV 14	-929	59	3317	-90.6	-32.6	0.19
170	SLV 15	-1177	-19	2844	-13.3	-41.48	-0.06
170	SLV 16	-1177	-19	2844	-13.3	-41.48	-0.06
171	SLU 1	1131	41	3197	-33.51	38.74	0.14
171	SLU 2	1103	40	3182	-32.6	37.79	0.14
171	SLU 3	1205	42	3253	-34.66	41.34	0.15
171	SLU 4	1189	42	3244	-34.11	40.78	0.15
171	SLU 5	1162	41	3219	-33.33	39.85	0.14
171	SLU 6	1264	43	3291	-35.39	43.39	0.15

Nodo	Cont.	Reazione a traslazione			Reazione a rotazione		
Ind.	N.br.	x	y	z	x	y	z
171	SLU 7	1247	42	3281	-34.84	42.83	0.15
171	SLU 8	1248	43	3271	-34.97	42.84	0.15
171	SLU 9	1231	42	3262	-34.43	42.27	0.15
171	SLU 10	1358	45	3753	-37.13	46.6	0.16
171	SLU 11	1460	48	3825	-39.18	50.15	0.17
171	SLU 12	1443	47	3816	-38.64	49.59	0.17
171	SLU 13	1416	46	3791	-37.86	48.65	0.16
171	SLU 14	1518	49	3862	-39.91	52.2	0.17
171	SLU 15	1502	48	3853	-39.37	51.64	0.17
171	SLU 16	1502	48	3843	-39.5	51.65	0.17
171	SLU 17	1486	48	3834	-38.95	51.08	0.17
171	SLU 18	1494	49	4014	-39.97	51.32	0.17
171	SLU 19	1478	48	4005	-39.43	50.76	0.17
171	SLU 20	1553	50	4051	-40.7	53.37	0.18
171	SLU 21	1536	49	4042	-40.16	52.81	0.17
171	SLU 22	1374	46	3674	-38.09	47.14	0.16
171	SLU 23	1346	45	3659	-37.19	46.2	0.16
171	SLU 24	1448	48	3731	-39.24	49.75	0.17
171	SLU 25	1432	47	3721	-38.69	49.18	0.17
171	SLU 26	1405	46	3696	-37.92	48.25	0.16
171	SLU 27	1507	49	3768	-39.97	51.8	0.17
171	SLU 28	1490	48	3758	-39.43	51.23	0.17
171	SLU 29	1491	48	3749	-39.55	51.24	0.17
171	SLU 30	1474	48	3739	-39.01	50.68	0.17
171	SLU 31	1601	51	4231	-41.71	55.01	0.18
171	SLU 32	1703	53	4302	-43.76	58.55	0.19
171	SLU 33	1686	53	4293	-43.22	57.99	0.19
171	SLU 34	1659	52	4268	-42.44	57.06	0.18
171	SLU 35	1761	54	4340	-44.49	60.61	0.19
171	SLU 36	1745	54	4330	-43.95	60.04	0.19
171	SLU 37	1745	54	4321	-44.08	60.05	0.19
171	SLU 38	1729	53	4311	-43.53	59.49	0.19
171	SLU 39	1737	54	4491	-44.55	59.73	0.19
171	SLU 40	1721	54	4482	-44.01	59.16	0.19
171	SLU 41	1796	55	4528	-45.29	61.78	0.2
171	SLU 42	1779	55	4519	-44.74	61.21	0.19
171	SLU 43	1387	51	3993	-41.99	47.48	0.18
171	SLU 44	1360	50	3977	-41.08	46.54	0.18
171	SLU 45	1462	52	4049	-43.14	50.08	0.19
171	SLU 46	1445	52	4040	-42.59	49.52	0.18
171	SLU 47	1418	51	4014	-41.82	48.59	0.18
171	SLU 48	1520	53	4086	-43.87	52.14	0.19
171	SLU 49	1504	53	4077	-43.33	51.57	0.19
171	SLU 50	1504	53	4067	-43.45	51.58	0.19
171	SLU 51	1488	52	4058	-42.91	51.02	0.19
171	SLU 52	1614	56	4549	-45.61	55.34	0.2
171	SLU 53	1716	58	4621	-47.66	58.89	0.21
171	SLU 54	1700	57	4611	-47.12	58.33	0.2
171	SLU 55	1673	57	4586	-46.34	57.4	0.2
171	SLU 56	1775	59	4658	-48.39	60.95	0.21
171	SLU 57	1758	58	4649	-47.85	60.38	0.21
171	SLU 58	1758	58	4639	-47.98	60.39	0.21
171	SLU 59	1742	58	4630	-47.43	59.82	0.2
171	SLU 60	1751	59	4810	-48.45	60.06	0.21
171	SLU 61	1734	58	4800	-47.91	59.5	0.21
171	SLU 62	1809	60	4847	-49.18	62.12	0.21
171	SLU 63	1793	59	4837	-48.64	61.55	0.21
171	SLU 64	1630	57	4470	-46.57	55.88	0.2
171	SLU 65	1602	56	4454	-45.67	54.94	0.2
171	SLU 66	1704	58	4526	-47.72	58.49	0.21
171	SLU 67	1688	58	4517	-47.18	57.92	0.2
171	SLU 68	1661	57	4491	-46.4	56.99	0.2
171	SLU 69	1763	59	4563	-48.45	60.54	0.21
171	SLU 70	1746	58	4554	-47.91	59.97	0.21
171	SLU 71	1747	58	4544	-48.03	59.98	0.21
171	SLU 72	1730	58	4535	-47.49	59.42	0.2
171	SLU 73	1857	61	5026	-50.19	63.75	0.22
171	SLU 74	1959	64	5098	-52.24	67.3	0.23
171	SLU 75	1942	63	5089	-51.7	66.73	0.22
171	SLU 76	1915	62	5063	-50.92	65.8	0.22
171	SLU 77	2017	64	5135	-52.98	69.35	0.23
171	SLU 78	2001	64	5126	-52.43	68.78	0.23
171	SLU 79	2001	64	5116	-52.56	68.79	0.23
171	SLU 80	1985	63	5107	-52.02	68.23	0.22
171	SLU 81	1993	65	5287	-53.04	68.47	0.23
171	SLU 82	1977	64	5277	-52.49	67.9	0.23
171	SLU 83	2052	65	5324	-53.77	70.52	0.23
171	SLU 84	2035	65	5315	-53.22	69.95	0.23
171	SLE RA 1	1200	42	3333	-34.82	41.14	0.15
171	SLE RA 2	1182	42	3323	-34.21	40.51	0.15
171	SLE RA 3	1250	43	3371	-35.58	42.88	0.15
171	SLE RA 4	1239	43	3365	-35.22	42.5	0.15
171	SLE RA 5	1221	42	3348	-34.7	41.88	0.15
171	SLE RA 6	1289	44	3396	-36.07	44.24	0.16
171	SLE RA 7	1278	44	3390	-35.71	43.87	0.15
171	SLE RA 8	1278	44	3383	-35.79	43.87	0.15
171	SLE RA 9	1267	43	3377	-35.43	43.5	0.15
171	SLE RA 10	1352	45	3704	-37.23	46.38	0.16
171	SLE RA 11	1420	47	3752	-38.6	48.75	0.17
171	SLE RA 12	1409	47	3746	-38.24	48.37	0.17

Nodo	Cont.	Reazione a traslazione			Reazione a rotazione		
Ind.	N.br.	x	y	z	x	y	z
171	SLE RA 13	1391	46	3729	-37.72	47.75	0.16
171	SLE RA 14	1459	48	3777	-39.09	50.12	0.17
171	SLE RA 15	1448	47	3771	-38.72	49.74	0.17
171	SLE RA 16	1448	47	3764	-38.81	49.75	0.17
171	SLE RA 17	1437	47	3758	-38.45	49.37	0.17
171	SLE RA 18	1443	48	3878	-39.13	49.53	0.17
171	SLE RA 19	1432	47	3872	-38.76	49.15	0.17
171	SLE RA 20	1482	48	3903	-39.61	50.9	0.17
171	SLE RA 21	1471	48	3897	-39.25	50.52	0.17
171	SLE FR 1	1200	42	3333	-34.82	41.14	0.15
171	SLE FR 2	1197	42	3331	-34.7	41.01	0.15
171	SLE FR 3	1216	43	3343	-35.01	41.69	0.15
171	SLE FR 4	1269	44	3495	-35.99	43.53	0.16
171	SLE FR 5	1289	44	3507	-36.31	44.2	0.16
171	SLE FR 6	1321	45	3606	-36.97	45.33	0.16
171	SLE QP 1	1200	42	3333	-34.82	41.14	0.15
171	SLE QP 2	1273	44	3497	-36.11	43.66	0.16
171	SLD 1	2321	51	3723	-44.32	81.02	0.18
171	SLD 2	2321	51	3723	-44.32	81.02	0.18
171	SLD 3	2213	18	3544	-12.33	77.19	0.07
171	SLD 4	2213	18	3544	-12.33	77.19	0.07
171	SLD 5	1751	96	3836	-87.08	60.68	0.34
171	SLD 6	1751	96	3836	-87.08	60.68	0.34
171	SLD 7	1391	-14	3240	19.54	47.91	-0.05
171	SLD 8	1391	-14	3240	19.54	47.91	-0.05
171	SLD 9	1155	101	3754	-91.76	39.41	0.36
171	SLD 10	1155	101	3754	-91.76	39.41	0.36
171	SLD 11	794	-8	3158	14.86	26.64	-0.03
171	SLD 12	794	-8	3158	14.86	26.64	-0.03
171	SLD 13	333	70	3450	-59.89	10.12	0.24
171	SLD 14	333	70	3450	-59.89	10.12	0.24
171	SLD 15	225	37	3271	-27.9	6.29	0.13
171	SLD 16	225	37	3271	-27.9	6.29	0.13
171	SLV 1	3729	64	4044	-58.3	131.21	0.23
171	SLV 2	3729	64	4044	-58.3	131.21	0.23
171	SLV 3	3465	-20	3589	23.44	121.9	-0.07
171	SLV 4	3465	-20	3589	23.44	121.9	-0.07
171	SLV 5	2409	177	4350	-166.74	84.05	0.62
171	SLV 6	2409	177	4350	-166.74	84.05	0.62
171	SLV 7	1531	-103	2835	105.73	53	-0.36
171	SLV 8	1531	-103	2835	105.73	53	-0.36
171	SLV 9	1015	191	4158	-177.95	34.31	0.67
171	SLV 10	1015	191	4158	-177.95	34.31	0.67
171	SLV 11	137	-90	2643	94.52	3.26	-0.31
171	SLV 12	137	-90	2643	94.52	3.26	-0.31
171	SLV 13	-919	108	3404	-95.66	-34.59	0.38
171	SLV 14	-919	108	3404	-95.66	-34.59	0.38
171	SLV 15	-1183	24	2950	-13.92	-43.9	0.08
171	SLV 16	-1183	24	2950	-13.92	-43.9	0.08
172	SLU 1	1258	41	3168	-35.38	47.49	0.15
172	SLU 2	1227	40	3149	-34.53	46.35	0.15
172	SLU 3	1339	43	3221	-36.6	50.53	0.15
172	SLU 4	1320	42	3209	-36.09	49.84	0.15
172	SLU 5	1290	41	3183	-35.31	48.7	0.15
172	SLU 6	1402	44	3255	-37.39	52.88	0.16
172	SLU 7	1383	43	3243	-36.88	52.2	0.16
172	SLU 8	1384	43	3237	-36.94	52.2	0.16
172	SLU 9	1365	43	3225	-36.43	51.51	0.15
172	SLU 10	1494	46	3731	-39.37	56.24	0.17
172	SLU 11	1606	48	3803	-41.45	60.42	0.18
172	SLU 12	1587	48	3792	-40.94	59.74	0.17
172	SLU 13	1557	47	3765	-40.16	58.6	0.17
172	SLU 14	1669	49	3837	-42.23	62.78	0.18
172	SLU 15	1650	49	3826	-41.72	62.09	0.18
172	SLU 16	1651	49	3819	-41.79	62.09	0.18
172	SLU 17	1632	48	3807	-41.28	61.41	0.18
172	SLU 18	1640	49	4000	-42.3	61.62	0.18
172	SLU 19	1621	49	3989	-41.79	60.94	0.18
172	SLU 20	1703	50	4034	-43.08	63.98	0.18
172	SLU 21	1684	50	4023	-42.58	63.29	0.18
172	SLU 22	1516	47	3651	-40.28	57.09	0.17
172	SLU 23	1485	46	3631	-39.43	55.94	0.17
172	SLU 24	1597	48	3703	-41.5	60.12	0.18
172	SLU 25	1578	48	3692	-40.99	59.44	0.17
172	SLU 26	1548	47	3665	-40.21	58.3	0.17
172	SLU 27	1660	49	3737	-42.29	62.48	0.18
172	SLU 28	1641	49	3726	-41.78	61.79	0.18
172	SLU 29	1642	49	3719	-41.85	61.79	0.18
172	SLU 30	1623	48	3707	-41.34	61.11	0.18
172	SLU 31	1752	52	4213	-44.28	65.84	0.19
172	SLU 32	1864	54	4286	-46.35	70.02	0.2
172	SLU 33	1846	54	4274	-45.84	69.33	0.19
172	SLU 34	1815	53	4248	-45.06	68.19	0.19
172	SLU 35	1927	55	4320	-47.14	72.37	0.2
172	SLU 36	1909	54	4308	-46.63	71.68	0.2
172	SLU 37	1909	54	4301	-46.69	71.69	0.2
172	SLU 38	1890	54	4290	-46.18	71	0.2
172	SLU 39	1898	55	4483	-47.2	71.22	0.2
172	SLU 40	1879	55	4471	-46.69	70.53	0.2
172	SLU 41	1961	56	4517	-47.99	73.57	0.2

Nodo	Cont.	Reazione a traslazione			Reazione a rotazione		
Ind.	N.br.	x	y	z	x	y	z
172	SLU 42	1942	55	4505	-47.48	72.89	0.2
172	SLU 43	1547	52	3954	-44.31	58.45	0.19
172	SLU 44	1516	51	3934	-43.46	57.31	0.18
172	SLU 45	1628	53	4006	-45.53	61.49	0.19
172	SLU 46	1609	53	3994	-45.02	60.8	0.19
172	SLU 47	1579	52	3968	-44.24	59.66	0.19
172	SLU 48	1691	54	4040	-46.32	63.84	0.2
172	SLU 49	1672	53	4029	-45.81	63.16	0.19
172	SLU 50	1673	53	4022	-45.88	63.16	0.19
172	SLU 51	1654	53	4010	-45.37	62.47	0.19
172	SLU 52	1783	57	4516	-48.31	67.2	0.21
172	SLU 53	1895	59	4588	-50.38	71.38	0.21
172	SLU 54	1876	58	4577	-49.87	70.69	0.21
172	SLU 55	1846	57	4550	-49.09	69.55	0.21
172	SLU 56	1958	60	4623	-51.17	73.73	0.22
172	SLU 57	1939	59	4611	-50.66	73.05	0.21
172	SLU 58	1940	59	4604	-50.72	73.05	0.21
172	SLU 59	1921	59	4592	-50.21	72.37	0.21
172	SLU 60	1928	60	4785	-51.23	72.58	0.22
172	SLU 61	1910	59	4774	-50.72	71.9	0.22
172	SLU 62	1991	61	4820	-52.02	74.94	0.22
172	SLU 63	1973	60	4808	-51.51	74.25	0.22
172	SLU 64	1805	57	4436	-49.21	68.04	0.21
172	SLU 65	1774	57	4416	-48.36	66.9	0.21
172	SLU 66	1886	59	4488	-50.44	71.08	0.21
172	SLU 67	1867	58	4477	-49.93	70.39	0.21
172	SLU 68	1837	57	4450	-49.14	69.26	0.21
172	SLU 69	1949	60	4523	-51.22	73.43	0.22
172	SLU 70	1930	59	4511	-50.71	72.75	0.22
172	SLU 71	1931	59	4504	-50.78	72.75	0.21
172	SLU 72	1912	59	4492	-50.27	72.07	0.21
172	SLU 73	2041	62	4999	-53.21	76.79	0.23
172	SLU 74	2153	64	5071	-55.28	80.97	0.23
172	SLU 75	2134	64	5059	-54.77	80.29	0.23
172	SLU 76	2104	63	5033	-53.99	79.15	0.23
172	SLU 77	2216	65	5105	-56.07	83.33	0.24
172	SLU 78	2197	65	5093	-55.56	82.64	0.24
172	SLU 79	2198	65	5086	-55.63	82.65	0.24
172	SLU 80	2179	64	5075	-55.12	81.96	0.23
172	SLU 81	2187	65	5268	-56.14	82.18	0.24
172	SLU 82	2168	65	5256	-55.63	81.49	0.24
172	SLU 83	2250	66	5302	-56.92	84.53	0.24
172	SLU 84	2231	66	5290	-56.41	83.85	0.24
172	SLE RA 1	1332	43	3306	-36.78	50.23	0.16
172	SLE RA 2	1311	42	3293	-36.21	49.47	0.15
172	SLE RA 3	1386	44	3341	-37.59	52.26	0.16
172	SLE RA 4	1373	43	3333	-37.25	51.8	0.16
172	SLE RA 5	1353	43	3316	-36.73	51.04	0.16
172	SLE RA 6	1428	44	3364	-38.12	53.83	0.16
172	SLE RA 7	1415	44	3356	-37.78	53.37	0.16
172	SLE RA 8	1416	44	3352	-37.82	53.37	0.16
172	SLE RA 9	1403	44	3344	-37.48	52.91	0.16
172	SLE RA 10	1489	46	3681	-39.44	56.07	0.17
172	SLE RA 11	1564	48	3729	-40.83	58.85	0.17
172	SLE RA 12	1551	47	3722	-40.49	58.4	0.17
172	SLE RA 13	1531	47	3704	-39.96	57.64	0.17
172	SLE RA 14	1606	48	3752	-41.35	60.42	0.18
172	SLE RA 15	1593	48	3744	-41.01	59.97	0.17
172	SLE RA 16	1594	48	3740	-41.05	59.97	0.17
172	SLE RA 17	1581	48	3732	-40.71	59.51	0.17
172	SLE RA 18	1586	48	3861	-41.39	59.65	0.18
172	SLE RA 19	1574	48	3853	-41.05	59.2	0.17
172	SLE RA 20	1628	49	3884	-41.92	61.22	0.18
172	SLE RA 21	1616	49	3876	-41.58	60.77	0.18
172	SLE FR 1	1332	43	3306	-36.78	50.23	0.16
172	SLE FR 2	1328	43	3304	-36.66	50.08	0.16
172	SLE FR 3	1348	43	3315	-36.99	50.86	0.16
172	SLE FR 4	1404	44	3470	-38.05	52.91	0.16
172	SLE FR 5	1425	45	3482	-38.37	53.69	0.16
172	SLE FR 6	1459	46	3583	-39.09	54.94	0.17
172	SLE QP 1	1332	43	3306	-36.78	50.23	0.16
172	SLE QP 2	1408	44	3473	-38.16	53.06	0.16
172	SLD 1	2494	52	3648	-46.31	93.44	0.19
172	SLD 2	2494	52	3648	-46.31	93.44	0.19
172	SLD 3	2381	19	3496	-14.81	89.45	0.07
172	SLD 4	2381	19	3496	-14.81	89.45	0.07
172	SLD 5	1905	96	3756	-88.38	71.22	0.34
172	SLD 6	1905	96	3756	-88.38	71.22	0.34
172	SLD 7	1528	-13	3249	16.62	57.93	-0.04
172	SLD 8	1528	-13	3249	16.62	57.93	-0.04
172	SLD 9	1288	102	3697	-92.94	48.19	0.36
172	SLD 10	1288	102	3697	-92.94	48.19	0.36
172	SLD 11	911	-7	3189	12.06	34.9	-0.02
172	SLD 12	911	-7	3189	12.06	34.9	-0.02
172	SLD 13	435	70	3449	-61.51	16.67	0.25
172	SLD 14	435	70	3449	-61.51	16.67	0.25
172	SLD 15	322	37	3297	-30.01	12.68	0.14
172	SLD 16	322	37	3297	-30.01	12.68	0.14
172	SLV 1	3954	65	3900	-60.15	147.67	0.23
172	SLV 2	3954	65	3900	-60.15	147.67	0.23

Nodo	Cont.	Reazione a traslazione			Reazione a rotazione		
Ind.	N.br.	x	y	z	x	y	z
172	SLV 3	3679	-18	3513	20.34	138	-0.06
172	SLV 4	3679	-18	3513	20.34	138	-0.06
172	SLV 5	2588	177	4188	-166.84	96.12	0.63
172	SLV 6	2588	177	4188	-166.84	96.12	0.63
172	SLV 7	1673	-101	2898	101.47	63.87	-0.35
172	SLV 8	1673	-101	2898	101.47	63.87	-0.35
172	SLV 9	1143	190	4047	-177.8	42.25	0.67
172	SLV 10	1143	190	4047	-177.8	42.25	0.67
172	SLV 11	228	-88	2757	90.52	10	-0.3
172	SLV 12	228	-88	2757	90.52	10	-0.3
172	SLV 13	-863	107	3432	-96.67	-31.88	0.38
172	SLV 14	-863	107	3432	-96.67	-31.88	0.38
172	SLV 15	-1138	24	3045	-16.17	-41.55	0.09
172	SLV 16	-1138	24	3045	-16.17	-41.55	0.09
173	SLU 1	1229	41	3224	-37.05	42.54	0.14
173	SLU 2	1197	41	3198	-36.27	41.44	0.14
173	SLU 3	1309	43	3276	-38.37	45.39	0.15
173	SLU 4	1290	42	3260	-37.9	44.72	0.15
173	SLU 5	1259	42	3231	-37.12	43.65	0.14
173	SLU 6	1372	44	3308	-39.22	47.6	0.15
173	SLU 7	1352	43	3292	-38.75	46.93	0.15
173	SLU 8	1354	43	3289	-38.75	46.96	0.15
173	SLU 9	1334	43	3274	-38.28	46.3	0.15
173	SLU 10	1453	46	3801	-41.45	50.38	0.16
173	SLU 11	1565	49	3879	-43.55	54.33	0.17
173	SLU 12	1546	48	3863	-43.08	53.67	0.17
173	SLU 13	1515	47	3833	-42.3	52.59	0.16
173	SLU 14	1628	50	3911	-44.4	56.54	0.17
173	SLU 15	1608	49	3895	-43.93	55.88	0.17
173	SLU 16	1610	49	3892	-43.93	55.91	0.17
173	SLU 17	1590	49	3877	-43.46	55.25	0.17
173	SLU 18	1595	50	4086	-44.45	55.32	0.17
173	SLU 19	1575	49	4070	-43.98	54.66	0.17
173	SLU 20	1657	51	4118	-45.3	57.54	0.17
173	SLU 21	1638	50	4102	-44.83	56.87	0.17
173	SLU 22	1479	47	3723	-42.28	51.28	0.16
173	SLU 23	1447	46	3696	-41.5	50.17	0.16
173	SLU 24	1559	49	3774	-43.6	54.12	0.17
173	SLU 25	1540	48	3758	-43.13	53.46	0.17
173	SLU 26	1509	47	3729	-42.35	52.38	0.16
173	SLU 27	1622	50	3806	-44.45	56.33	0.17
173	SLU 28	1602	49	3791	-43.98	55.67	0.17
173	SLU 29	1603	49	3788	-43.98	55.7	0.17
173	SLU 30	1584	49	3772	-43.51	55.04	0.17
173	SLU 31	1703	52	4299	-46.68	59.12	0.18
173	SLU 32	1815	54	4377	-48.78	63.07	0.19
173	SLU 33	1796	54	4361	-48.31	62.41	0.19
173	SLU 34	1765	53	4332	-47.53	61.33	0.18
173	SLU 35	1878	55	4409	-49.63	65.28	0.19
173	SLU 36	1858	55	4394	-49.16	64.62	0.19
173	SLU 37	1859	55	4391	-49.16	64.65	0.19
173	SLU 38	1840	54	4375	-48.69	63.98	0.19
173	SLU 39	1845	55	4584	-49.68	64.06	0.19
173	SLU 40	1825	55	4568	-49.22	63.4	0.19
173	SLU 41	1907	56	4617	-50.53	66.27	0.19
173	SLU 42	1888	56	4601	-50.06	65.61	0.19
173	SLU 43	1512	52	4021	-46.37	52.31	0.18
173	SLU 44	1480	51	3994	-45.59	51.2	0.18
173	SLU 45	1592	53	4072	-47.69	55.15	0.18
173	SLU 46	1573	53	4056	-47.22	54.49	0.18
173	SLU 47	1542	52	4027	-46.44	53.41	0.18
173	SLU 48	1655	54	4105	-48.54	57.36	0.19
173	SLU 49	1635	54	4089	-48.07	56.7	0.18
173	SLU 50	1637	54	4086	-48.07	56.73	0.18
173	SLU 51	1617	53	4070	-47.6	56.07	0.18
173	SLU 52	1736	57	4597	-50.77	60.15	0.2
173	SLU 53	1848	59	4675	-52.87	64.1	0.2
173	SLU 54	1829	59	4659	-52.4	63.44	0.2
173	SLU 55	1798	58	4630	-51.62	62.36	0.2
173	SLU 56	1911	60	4708	-53.72	66.31	0.21
173	SLU 57	1891	60	4692	-53.25	65.65	0.2
173	SLU 58	1893	59	4689	-53.25	65.68	0.2
173	SLU 59	1873	59	4673	-52.78	65.01	0.2
173	SLU 60	1878	60	4882	-53.77	65.09	0.21
173	SLU 61	1858	60	4866	-53.3	64.43	0.2
173	SLU 62	1940	61	4915	-54.62	67.3	0.21
173	SLU 63	1921	61	4899	-54.15	66.64	0.21
173	SLU 64	1762	58	4519	-51.61	61.05	0.2
173	SLU 65	1730	57	4493	-50.82	59.94	0.2
173	SLU 66	1842	59	4570	-52.92	63.89	0.2
173	SLU 67	1823	59	4555	-52.45	63.23	0.2
173	SLU 68	1792	58	4525	-51.67	62.15	0.2
173	SLU 69	1905	60	4603	-53.77	66.1	0.21
173	SLU 70	1885	60	4587	-53.3	65.44	0.2
173	SLU 71	1886	59	4584	-53.3	65.47	0.2
173	SLU 72	1867	59	4568	-52.83	64.8	0.2
173	SLU 73	1986	63	5096	-56	68.89	0.22
173	SLU 74	2098	65	5173	-58.1	72.84	0.22
173	SLU 75	2079	64	5158	-57.63	72.17	0.22
173	SLU 76	2048	64	5128	-56.85	71.1	0.22

Nodo	Cont.	Reazione a traslazione			Reazione a rotazione		
Ind.	N.br.	x	y	z	x	y	z
173	SLU 77	2161	66	5206	-58.95	75.05	0.23
173	SLU 78	2141	65	5190	-58.48	74.38	0.22
173	SLU 79	2143	65	5187	-58.48	74.42	0.22
173	SLU 80	2123	65	5171	-58.01	73.75	0.22
173	SLU 81	2128	66	5380	-59.01	73.83	0.23
173	SLU 82	2108	65	5365	-58.54	73.16	0.23
173	SLU 83	2190	67	5413	-59.85	76.04	0.23
173	SLU 84	2171	66	5397	-59.38	75.38	0.23
173	SLE RA 1	1300	43	3367	-38.55	45.04	0.15
173	SLE RA 2	1279	43	3349	-38.03	44.3	0.15
173	SLE RA 3	1354	44	3401	-39.42	46.93	0.15
173	SLE RA 4	1341	44	3390	-39.11	46.49	0.15
173	SLE RA 5	1320	43	3371	-38.59	45.77	0.15
173	SLE RA 6	1396	45	3423	-39.99	48.41	0.15
173	SLE RA 7	1383	44	3412	-39.68	47.97	0.15
173	SLE RA 8	1383	44	3410	-39.68	47.99	0.15
173	SLE RA 9	1371	44	3400	-39.36	47.54	0.15
173	SLE RA 10	1450	46	3751	-41.48	50.27	0.16
173	SLE RA 11	1525	48	3803	-42.88	52.9	0.16
173	SLE RA 12	1512	48	3792	-42.56	52.46	0.16
173	SLE RA 13	1491	47	3773	-42.04	51.74	0.16
173	SLE RA 14	1566	48	3825	-43.44	54.37	0.17
173	SLE RA 15	1553	48	3814	-43.13	53.93	0.17
173	SLE RA 16	1554	48	3812	-43.13	53.95	0.17
173	SLE RA 17	1541	48	3802	-42.82	53.51	0.16
173	SLE RA 18	1544	49	3941	-43.48	53.56	0.17
173	SLE RA 19	1531	48	3930	-43.17	53.12	0.17
173	SLE RA 20	1586	49	3963	-44.04	55.03	0.17
173	SLE RA 21	1573	49	3952	-43.73	54.59	0.17
173	SLE FR 1	1300	43	3367	-38.55	45.04	0.15
173	SLE FR 2	1296	43	3363	-38.44	44.89	0.15
173	SLE FR 3	1317	43	3375	-38.77	45.63	0.15
173	SLE FR 4	1369	45	3535	-39.92	47.45	0.15
173	SLE FR 5	1390	45	3548	-40.25	48.19	0.15
173	SLE FR 6	1422	46	3654	-41.01	49.3	0.16
173	SLE QP 1	1300	43	3367	-38.55	45.04	0.15
173	SLE QP 2	1374	45	3539	-40.03	47.6	0.15
173	SLD 1	2433	51	3429	-47.16	85.89	0.17
173	SLD 2	2433	51	3429	-47.16	85.89	0.17
173	SLD 3	2320	21	3314	-18.34	81.93	0.08
173	SLD 4	2320	21	3314	-18.34	81.93	0.08
173	SLD 5	1863	92	3680	-85.89	65.1	0.31
173	SLD 6	1863	92	3680	-85.89	65.1	0.31
173	SLD 7	1485	-8	3297	10.2	51.88	-0.02
173	SLD 8	1485	-8	3297	10.2	51.88	-0.02
173	SLD 9	1262	97	3781	-90.26	43.31	0.33
173	SLD 10	1262	97	3781	-90.26	43.31	0.33
173	SLD 11	884	-3	3398	5.84	30.09	0
173	SLD 12	884	-3	3398	5.84	30.09	0
173	SLD 13	427	68	3764	-61.72	13.26	0.23
173	SLD 14	427	68	3764	-61.72	13.26	0.23
173	SLD 15	314	38	3649	-32.89	9.3	0.13
173	SLD 16	314	38	3649	-32.89	9.3	0.13
173	SLV 1	3857	63	3291	-59.39	137.34	0.21
173	SLV 2	3857	63	3291	-59.39	137.34	0.21
173	SLV 3	3582	-14	3001	14.25	127.73	-0.04
173	SLV 4	3582	-14	3001	14.25	127.73	-0.04
173	SLV 5	2536	166	3905	-157.52	89.08	0.55
173	SLV 6	2536	166	3905	-157.52	89.08	0.55
173	SLV 7	1618	-89	2937	87.94	57.07	-0.28
173	SLV 8	1618	-89	2937	87.94	57.07	-0.28
173	SLV 9	1129	178	4141	-168	38.12	0.59
173	SLV 10	1129	178	4141	-168	38.12	0.59
173	SLV 11	211	-77	3173	77.47	6.11	-0.24
173	SLV 12	211	-77	3173	77.47	6.11	-0.24
173	SLV 13	-835	103	4077	-94.3	-32.54	0.35
173	SLV 14	-835	103	4077	-94.3	-32.54	0.35
173	SLV 15	-1110	27	3787	-20.66	-42.14	0.1
173	SLV 16	-1110	27	3787	-20.66	-42.14	0.1
174	SLU 1	1190	42	3268	-38.96	45.27	0.12
174	SLU 2	1157	41	3234	-38.26	44.08	0.12
174	SLU 3	1269	43	3315	-40.4	48.29	0.12
174	SLU 4	1250	43	3295	-39.98	47.57	0.12
174	SLU 5	1219	42	3262	-39.2	46.41	0.12
174	SLU 6	1330	44	3344	-41.34	50.62	0.13
174	SLU 7	1311	44	3324	-40.92	49.91	0.12
174	SLU 8	1312	44	3325	-40.84	49.93	0.12
174	SLU 9	1293	43	3304	-40.42	49.22	0.12
174	SLU 10	1398	47	3852	-43.85	53.11	0.13
174	SLU 11	1510	49	3933	-45.99	57.32	0.14
174	SLU 12	1490	49	3913	-45.57	56.61	0.14
174	SLU 13	1459	48	3880	-44.79	55.44	0.14
174	SLU 14	1571	50	3962	-46.93	59.65	0.14
174	SLU 15	1551	50	3942	-46.51	58.94	0.14
174	SLU 16	1553	50	3943	-46.43	58.96	0.14
174	SLU 17	1533	49	3922	-46.01	58.25	0.14
174	SLU 18	1533	50	4151	-46.95	58.17	0.14
174	SLU 19	1514	50	4130	-46.53	57.46	0.14
174	SLU 20	1594	51	4179	-47.89	60.5	0.15
174	SLU 21	1575	51	4159	-47.46	59.79	0.14

Nodo	Cont.	Reazione a traslazione			Reazione a rotazione		
Ind.	N.br.	x	y	z	x	y	z
174	SLU 22	1428	48	3777	-44.61	54.24	0.14
174	SLU 23	1395	47	3743	-43.9	53.05	0.13
174	SLU 24	1507	49	3824	-46.04	57.26	0.14
174	SLU 25	1488	49	3804	-45.62	56.55	0.14
174	SLU 26	1457	48	3771	-44.84	55.38	0.14
174	SLU 27	1569	50	3853	-46.98	59.59	0.14
174	SLU 28	1549	50	3832	-46.56	58.88	0.14
174	SLU 29	1550	50	3834	-46.48	58.9	0.14
174	SLU 30	1531	49	3813	-46.06	58.19	0.14
174	SLU 31	1636	53	4361	-49.49	62.08	0.15
174	SLU 32	1748	55	4442	-51.63	66.29	0.16
174	SLU 33	1728	55	4422	-51.21	65.58	0.16
174	SLU 34	1697	54	4389	-50.43	64.41	0.15
174	SLU 35	1809	56	4471	-52.57	68.63	0.16
174	SLU 36	1790	56	4450	-52.15	67.91	0.16
174	SLU 37	1791	56	4452	-52.07	67.94	0.16
174	SLU 38	1771	55	4431	-51.65	67.22	0.16
174	SLU 39	1771	56	4660	-52.59	67.14	0.16
174	SLU 40	1752	56	4639	-52.17	66.43	0.16
174	SLU 41	1833	57	4688	-53.53	69.47	0.16
174	SLU 42	1813	57	4668	-53.11	68.76	0.16
174	SLU 43	1465	52	4074	-48.72	55.77	0.15
174	SLU 44	1433	52	4040	-48.01	54.58	0.15
174	SLU 45	1544	54	4121	-50.16	58.79	0.15
174	SLU 46	1525	54	4101	-49.73	58.08	0.15
174	SLU 47	1494	53	4068	-48.95	56.91	0.15
174	SLU 48	1606	55	4150	-51.1	61.13	0.16
174	SLU 49	1586	55	4129	-50.67	60.41	0.15
174	SLU 50	1588	54	4131	-50.59	60.44	0.15
174	SLU 51	1568	54	4110	-50.17	59.72	0.15
174	SLU 52	1673	58	4658	-53.6	63.61	0.16
174	SLU 53	1785	60	4739	-55.75	67.83	0.17
174	SLU 54	1765	60	4719	-55.32	67.11	0.17
174	SLU 55	1734	59	4686	-54.54	65.94	0.17
174	SLU 56	1846	61	4768	-56.68	70.16	0.17
174	SLU 57	1827	60	4747	-56.26	69.44	0.17
174	SLU 58	1828	60	4749	-56.18	69.47	0.17
174	SLU 59	1808	60	4728	-55.76	68.75	0.17
174	SLU 60	1808	61	4956	-56.7	68.67	0.17
174	SLU 61	1789	61	4936	-56.28	67.96	0.17
174	SLU 62	1870	62	4985	-57.64	71.01	0.18
174	SLU 63	1850	62	4965	-57.22	70.29	0.17
174	SLU 64	1703	58	4583	-54.36	64.74	0.17
174	SLU 65	1671	58	4549	-53.66	63.55	0.16
174	SLU 66	1783	60	4630	-55.8	67.77	0.17
174	SLU 67	1763	60	4610	-55.38	67.05	0.17
174	SLU 68	1732	59	4577	-54.6	65.88	0.17
174	SLU 69	1844	61	4659	-56.74	70.1	0.17
174	SLU 70	1824	61	4638	-56.32	69.38	0.17
174	SLU 71	1826	60	4640	-56.24	69.41	0.17
174	SLU 72	1806	60	4619	-55.82	68.69	0.17
174	SLU 73	1911	64	5167	-59.25	72.58	0.18
174	SLU 74	2023	66	5248	-61.39	76.8	0.19
174	SLU 75	2004	66	5228	-60.97	76.08	0.19
174	SLU 76	1972	65	5195	-60.18	74.92	0.18
174	SLU 77	2084	67	5277	-62.33	79.13	0.19
174	SLU 78	2065	67	5256	-61.91	78.42	0.19
174	SLU 79	2066	66	5258	-61.83	78.44	0.19
174	SLU 80	2047	66	5237	-61.41	77.72	0.19
174	SLU 81	2047	67	5465	-62.34	77.65	0.19
174	SLU 82	2027	67	5445	-61.92	76.93	0.19
174	SLU 83	2108	68	5494	-63.28	79.98	0.19
174	SLU 84	2088	68	5474	-62.86	79.26	0.19
174	SLE RA 1	1258	44	3413	-40.57	47.83	0.12
174	SLE RA 2	1236	43	3391	-40.11	47.04	0.12
174	SLE RA 3	1311	45	3445	-41.53	49.85	0.13
174	SLE RA 4	1298	44	3431	-41.25	49.37	0.13
174	SLE RA 5	1277	44	3410	-40.73	48.59	0.12
174	SLE RA 6	1352	45	3464	-42.16	51.4	0.13
174	SLE RA 7	1339	45	3450	-41.88	50.92	0.13
174	SLE RA 8	1339	45	3451	-41.83	50.94	0.13
174	SLE RA 9	1326	45	3438	-41.55	50.46	0.13
174	SLE RA 10	1396	47	3803	-43.83	53.06	0.13
174	SLE RA 11	1471	49	3857	-45.26	55.87	0.14
174	SLE RA 12	1458	48	3843	-44.98	55.39	0.14
174	SLE RA 13	1437	48	3822	-44.46	54.61	0.14
174	SLE RA 14	1512	49	3876	-45.89	57.42	0.14
174	SLE RA 15	1499	49	3862	-45.61	56.95	0.14
174	SLE RA 16	1500	49	3863	-45.55	56.96	0.14
174	SLE RA 17	1487	49	3850	-45.27	56.48	0.14
174	SLE RA 18	1487	49	4002	-45.9	56.43	0.14
174	SLE RA 19	1474	49	3988	-45.62	55.96	0.14
174	SLE RA 20	1528	50	4021	-46.52	57.99	0.14
174	SLE RA 21	1515	50	4007	-46.24	57.51	0.14
174	SLE FR 1	1258	44	3413	-40.57	47.83	0.12
174	SLE FR 2	1253	44	3409	-40.48	47.67	0.12
174	SLE FR 3	1274	44	3421	-40.83	48.45	0.12
174	SLE FR 4	1322	45	3585	-42.08	50.25	0.13
174	SLE FR 5	1343	46	3597	-42.42	51.03	0.13
174	SLE FR 6	1372	47	3707	-43.24	52.13	0.13

Nodo	Cont.	Reazione a traslazione			Reazione a rotazione		
Ind.	N.br.	x	y	z	x	y	z
174	SLE QP 1	1258	44	3413	-40.57	47.83	0.12
174	SLE QP 2	1326	45	3590	-42.17	50.41	0.13
174	SLD 1	2351	50	3290	-47.39	89.65	0.14
174	SLD 2	2351	50	3290	-47.39	89.65	0.14
174	SLD 3	2243	25	3205	-23.23	85.78	0.07
174	SLD 4	2243	25	3205	-23.23	85.78	0.07
174	SLD 5	1798	85	3628	-80.39	68.05	0.24
174	SLD 6	1798	85	3628	-80.39	68.05	0.24
174	SLD 7	1437	1	3346	0.16	55.15	0
174	SLD 8	1437	1	3346	0.16	55.15	0
174	SLD 9	1216	90	3834	-84.5	45.67	0.25
174	SLD 10	1216	90	3834	-84.5	45.67	0.25
174	SLD 11	855	5	3551	-3.96	32.77	0.02
174	SLD 12	855	5	3551	-3.96	32.77	0.02
174	SLD 13	410	66	3975	-61.12	15.04	0.19
174	SLD 14	410	66	3975	-61.12	15.04	0.19
174	SLD 15	302	40	3890	-36.95	11.17	0.11
174	SLD 16	302	40	3890	-36.95	11.17	0.11
174	SLV 1	3728	59	2893	-56.61	142.35	0.17
174	SLV 2	3728	59	2893	-56.61	142.35	0.17
174	SLV 3	3465	-6	2683	5.06	133	-0.01
174	SLV 4	3465	-6	2683	5.06	133	-0.01
174	SLV 5	2446	148	3701	-140.03	92.17	0.42
174	SLV 6	2446	148	3701	-140.03	92.17	0.42
174	SLV 7	1569	-68	2998	65.52	61.01	-0.19
174	SLV 8	1569	-68	2998	65.52	61.01	-0.19
174	SLV 9	1084	159	4182	-149.87	39.81	0.45
174	SLV 10	1084	159	4182	-149.87	39.81	0.45
174	SLV 11	207	-57	3479	55.69	8.65	-0.16
174	SLV 12	207	-57	3479	55.69	8.65	-0.16
174	SLV 13	-812	97	4497	-89.4	-32.18	0.27
174	SLV 14	-812	97	4497	-89.4	-32.18	0.27
174	SLV 15	-1075	32	4286	-27.74	-41.53	0.09
174	SLV 16	-1075	32	4286	-27.74	-41.53	0.09
175	SLU 1	913	46	3163	-41.74	33.06	0.09
175	SLU 2	885	45	3125	-41.13	32.09	0.09
175	SLU 3	980	47	3196	-43.36	35.56	0.09
175	SLU 4	964	47	3173	-42.99	34.98	0.09
175	SLU 5	938	46	3141	-42.2	34.05	0.09
175	SLU 6	1033	48	3212	-44.44	37.51	0.1
175	SLU 7	1016	48	3190	-44.07	36.94	0.1
175	SLU 8	1017	48	3195	-43.89	36.96	0.1
175	SLU 9	1001	48	3172	-43.52	36.38	0.09
175	SLU 10	1069	52	3727	-47.3	38.82	0.1
175	SLU 11	1164	54	3798	-49.54	42.29	0.11
175	SLU 12	1148	54	3775	-49.17	41.71	0.11
175	SLU 13	1122	53	3743	-48.38	40.77	0.11
175	SLU 14	1217	55	3814	-50.62	44.24	0.11
175	SLU 15	1200	55	3791	-50.25	43.67	0.11
175	SLU 16	1202	55	3797	-50.07	43.69	0.11
175	SLU 17	1185	54	3774	-49.7	43.11	0.11
175	SLU 18	1176	55	4023	-50.57	42.67	0.11
175	SLU 19	1159	55	4000	-50.2	42.09	0.11
175	SLU 20	1228	56	4039	-51.64	44.62	0.11
175	SLU 21	1212	56	4016	-51.27	44.04	0.11
175	SLU 22	1100	52	3653	-47.97	39.9	0.1
175	SLU 23	1072	52	3614	-47.36	38.94	0.1
175	SLU 24	1167	54	3686	-49.6	42.41	0.11
175	SLU 25	1151	54	3663	-49.23	41.83	0.11
175	SLU 26	1125	53	3630	-48.44	40.89	0.11
175	SLU 27	1220	55	3702	-50.67	44.36	0.11
175	SLU 28	1203	55	3679	-50.3	43.78	0.11
175	SLU 29	1205	55	3685	-50.13	43.8	0.11
175	SLU 30	1188	54	3662	-49.76	43.23	0.11
175	SLU 31	1257	58	4216	-53.54	45.67	0.12
175	SLU 32	1351	61	4287	-55.77	49.14	0.12
175	SLU 33	1335	60	4264	-55.41	48.56	0.12
175	SLU 34	1309	60	4232	-54.61	47.62	0.12
175	SLU 35	1404	62	4304	-56.85	51.09	0.12
175	SLU 36	1388	62	4281	-56.48	50.51	0.12
175	SLU 37	1389	61	4286	-56.3	50.53	0.12
175	SLU 38	1372	61	4264	-55.94	49.96	0.12
175	SLU 39	1363	62	4512	-56.8	49.51	0.12
175	SLU 40	1346	62	4489	-56.43	48.93	0.12
175	SLU 41	1415	63	4528	-57.88	51.46	0.13
175	SLU 42	1399	63	4505	-57.51	50.89	0.12
175	SLU 43	1122	57	3944	-52.12	40.63	0.11
175	SLU 44	1095	56	3906	-51.51	39.66	0.11
175	SLU 45	1190	59	3978	-53.75	43.13	0.12
175	SLU 46	1174	58	3955	-53.38	42.55	0.12
175	SLU 47	1147	58	3922	-52.59	41.62	0.11
175	SLU 48	1242	60	3994	-54.82	45.08	0.12
175	SLU 49	1226	59	3971	-54.45	44.51	0.12
175	SLU 50	1227	59	3977	-54.28	44.53	0.12
175	SLU 51	1211	59	3954	-53.91	43.95	0.12
175	SLU 52	1279	63	4508	-57.69	46.39	0.13
175	SLU 53	1374	65	4579	-59.92	49.86	0.13
175	SLU 54	1358	65	4556	-59.56	49.28	0.13
175	SLU 55	1331	64	4524	-58.76	48.34	0.13
175	SLU 56	1426	67	4595	-61	51.81	0.13

Nodo	Cont.	Reazione a traslazione			Reazione a rotazione		
Ind.	N.br.	x	y	z	x	y	z
175	SLU 57	1410	66	4572	-60.63	51.24	0.13
175	SLU 58	1411	66	4578	-60.45	51.26	0.13
175	SLU 59	1395	66	4555	-60.09	50.68	0.13
175	SLU 60	1385	67	4804	-60.95	50.24	0.13
175	SLU 61	1369	66	4781	-60.58	49.66	0.13
175	SLU 62	1438	68	4820	-62.03	52.19	0.14
175	SLU 63	1421	67	4797	-61.66	51.61	0.13
175	SLU 64	1309	64	4434	-58.36	47.47	0.13
175	SLU 65	1282	63	4395	-57.74	46.51	0.13
175	SLU 66	1377	65	4467	-59.98	49.98	0.13
175	SLU 67	1361	65	4444	-59.61	49.4	0.13
175	SLU 68	1335	64	4412	-58.82	48.46	0.13
175	SLU 69	1429	67	4483	-61.06	51.93	0.13
175	SLU 70	1413	66	4460	-60.69	51.35	0.13
175	SLU 71	1414	66	4466	-60.51	51.37	0.13
175	SLU 72	1398	66	4443	-60.14	50.8	0.13
175	SLU 73	1466	70	4997	-63.92	53.24	0.14
175	SLU 74	1561	72	5069	-66.16	56.71	0.14
175	SLU 75	1545	72	5046	-65.79	56.13	0.14
175	SLU 76	1519	71	5013	-65	55.19	0.14
175	SLU 77	1614	73	5085	-67.24	58.66	0.15
175	SLU 78	1597	73	5062	-66.87	58.08	0.15
175	SLU 79	1598	73	5068	-66.69	58.1	0.14
175	SLU 80	1582	72	5045	-66.32	57.53	0.14
175	SLU 81	1572	73	5293	-67.18	57.08	0.15
175	SLU 82	1556	73	5270	-66.82	56.5	0.15
175	SLU 83	1625	74	5309	-68.26	59.03	0.15
175	SLU 84	1608	74	5286	-67.89	58.46	0.15
175	SLE RA 1	966	48	3303	-43.52	35.01	0.1
175	SLE RA 2	948	47	3277	-43.11	34.37	0.09
175	SLE RA 3	1011	49	3325	-44.6	36.68	0.1
175	SLE RA 4	1000	48	3310	-44.36	36.3	0.1
175	SLE RA 5	983	48	3288	-43.83	35.67	0.1
175	SLE RA 6	1046	49	3336	-45.32	37.98	0.1
175	SLE RA 7	1035	49	3321	-45.07	37.6	0.1
175	SLE RA 8	1036	49	3324	-44.96	37.61	0.1
175	SLE RA 9	1025	49	3309	-44.71	37.23	0.1
175	SLE RA 10	1071	52	3679	-47.23	38.86	0.1
175	SLE RA 11	1134	53	3726	-48.72	41.17	0.11
175	SLE RA 12	1123	53	3711	-48.48	40.78	0.11
175	SLE RA 13	1106	52	3689	-47.95	40.16	0.1
175	SLE RA 14	1169	54	3737	-49.44	42.47	0.11
175	SLE RA 15	1158	54	3722	-49.19	42.08	0.11
175	SLE RA 16	1159	54	3726	-49.07	42.1	0.11
175	SLE RA 17	1148	53	3710	-48.83	41.71	0.11
175	SLE RA 18	1141	54	3876	-49.41	41.42	0.11
175	SLE RA 19	1130	54	3861	-49.16	41.03	0.11
175	SLE RA 20	1176	55	3887	-50.12	42.72	0.11
175	SLE RA 21	1165	54	3872	-49.88	42.34	0.11
175	SLE FR 1	966	48	3303	-43.52	35.01	0.1
175	SLE FR 2	962	47	3298	-43.44	34.88	0.09
175	SLE FR 3	980	48	3307	-43.81	35.53	0.1
175	SLE FR 4	1015	49	3470	-45.2	36.81	0.1
175	SLE FR 5	1033	50	3479	-45.57	37.45	0.1
175	SLE FR 6	1054	51	3590	-46.46	38.22	0.1
175	SLE QP 1	966	48	3303	-43.52	35.01	0.1
175	SLE QP 2	1019	49	3475	-45.29	36.93	0.1
175	SLD 1	1919	67	2838	-60.58	71.21	0.11
175	SLD 2	1919	67	2838	-60.58	71.21	0.11
175	SLD 3	1826	47	2740	-42.98	67.87	0.05
175	SLD 4	1826	47	2740	-42.98	67.87	0.05
175	SLD 5	1430	84	3432	-76.56	52.27	0.19
175	SLD 6	1430	84	3432	-76.56	52.27	0.19
175	SLD 7	1119	19	3106	-17.91	41.16	0
175	SLD 8	1119	19	3106	-17.91	41.16	0
175	SLD 9	918	80	3844	-72.67	32.7	0.2
175	SLD 10	918	80	3844	-72.67	32.7	0.2
175	SLD 11	607	14	3517	-14.01	21.6	0.01
175	SLD 12	607	14	3517	-14.01	21.6	0.01
175	SLD 13	212	52	4210	-47.59	5.99	0.14
175	SLD 14	212	52	4210	-47.59	5.99	0.14
175	SLD 15	118	32	4112	-30	2.66	0.09
175	SLD 16	118	32	4112	-30	2.66	0.09
175	SLV 1	3128	92	1992	-83.07	117.22	0.13
175	SLV 2	3128	92	1992	-83.07	117.22	0.13
175	SLV 3	2903	42	1747	-38.31	109.19	-0.01
175	SLV 4	2903	42	1747	-38.31	109.19	-0.01
175	SLV 5	1994	138	3401	-124.51	73.21	0.33
175	SLV 6	1994	138	3401	-124.51	73.21	0.33
175	SLV 7	1241	-28	2586	24.69	46.42	-0.15
175	SLV 8	1241	-28	2586	24.69	46.42	-0.15
175	SLV 9	796	127	4364	-115.27	27.44	0.35
175	SLV 10	796	127	4364	-115.27	27.44	0.35
175	SLV 11	43	-39	3549	33.94	0.66	-0.13
175	SLV 12	43	-39	3549	33.94	0.66	-0.13
175	SLV 13	-865	57	5203	-52.26	-35.32	0.21
175	SLV 14	-865	57	5203	-52.26	-35.32	0.21
175	SLV 15	-1091	7	4958	-7.5	-43.36	0.07
175	SLV 16	-1091	7	4958	-7.5	-43.36	0.07
176	SLU 1	520	63	2576	-44.7	25.38	0.25

Nodo	Cont.	Reazione a traslazione			Reazione a rotazione		
Ind.	N.br.	x	y	z	x	y	z
176	SLU 2	502	63	2546	-44.22	24.54	0.25
176	SLU 3	571	66	2559	-46.54	27.75	0.26
176	SLU 4	560	65	2541	-46.25	27.26	0.26
176	SLU 5	542	64	2522	-45.46	26.41	0.26
176	SLU 6	611	68	2534	-47.79	29.62	0.27
176	SLU 7	600	67	2516	-47.5	29.13	0.27
176	SLU 8	600	67	2527	-47.19	29.12	0.27
176	SLU 9	589	66	2509	-46.9	28.62	0.27
176	SLU 10	605	72	3038	-51.09	29.47	0.29
176	SLU 11	675	76	3051	-53.41	32.68	0.3
176	SLU 12	663	75	3033	-53.12	32.18	0.3
176	SLU 13	645	74	3013	-52.33	31.34	0.3
176	SLU 14	715	77	3026	-54.66	34.55	0.31
176	SLU 15	703	77	3008	-54.37	34.05	0.31
176	SLU 16	704	77	3019	-54.06	34.04	0.31
176	SLU 17	693	76	3001	-53.77	33.55	0.31
176	SLU 18	668	77	3279	-54.51	32.42	0.31
176	SLU 19	657	77	3261	-54.22	31.92	0.31
176	SLU 20	708	79	3254	-55.76	34.29	0.32
176	SLU 21	697	79	3236	-55.47	33.79	0.32
176	SLU 22	634	73	2950	-51.63	30.75	0.29
176	SLU 23	615	72	2920	-51.15	29.92	0.29
176	SLU 24	685	76	2933	-53.47	33.13	0.3
176	SLU 25	674	75	2915	-53.18	32.63	0.3
176	SLU 26	655	74	2896	-52.39	31.79	0.3
176	SLU 27	725	77	2908	-54.72	35	0.31
176	SLU 28	714	77	2890	-54.43	34.5	0.31
176	SLU 29	714	77	2901	-54.12	34.49	0.31
176	SLU 30	703	76	2883	-53.83	33.99	0.31
176	SLU 31	719	82	3412	-58.01	34.85	0.33
176	SLU 32	788	85	3424	-60.34	38.06	0.34
176	SLU 33	777	85	3406	-60.05	37.56	0.34
176	SLU 34	759	84	3387	-59.26	36.72	0.34
176	SLU 35	828	87	3400	-61.58	39.93	0.35
176	SLU 36	817	87	3382	-61.29	39.43	0.35
176	SLU 37	818	86	3393	-60.99	39.42	0.35
176	SLU 38	806	86	3375	-60.7	38.92	0.35
176	SLU 39	782	87	3653	-61.44	37.79	0.35
176	SLU 40	771	87	3635	-61.15	37.29	0.35
176	SLU 41	822	89	3628	-62.68	39.66	0.36
176	SLU 42	811	89	3610	-62.39	39.16	0.36
176	SLU 43	637	79	3221	-55.74	31.14	0.32
176	SLU 44	619	78	3191	-55.26	30.31	0.31
176	SLU 45	688	81	3204	-57.58	33.52	0.33
176	SLU 46	677	81	3186	-57.29	33.02	0.33
176	SLU 47	659	80	3167	-56.5	32.18	0.32
176	SLU 48	728	83	3179	-58.83	35.39	0.33
176	SLU 49	717	83	3161	-58.54	34.89	0.33
176	SLU 50	717	82	3172	-58.23	34.88	0.33
176	SLU 51	706	82	3154	-57.94	34.39	0.33
176	SLU 52	722	88	3683	-62.12	35.24	0.35
176	SLU 53	792	91	3695	-64.45	38.45	0.37
176	SLU 54	781	91	3677	-64.16	37.95	0.37
176	SLU 55	762	90	3658	-63.37	37.11	0.36
176	SLU 56	832	93	3671	-65.69	40.32	0.37
176	SLU 57	821	93	3653	-65.4	39.82	0.37
176	SLU 58	821	92	3664	-65.1	39.81	0.37
176	SLU 59	810	92	3646	-64.81	39.31	0.37
176	SLU 60	785	93	3924	-65.55	38.18	0.37
176	SLU 61	774	92	3906	-65.26	37.69	0.37
176	SLU 62	825	95	3899	-66.79	40.05	0.38
176	SLU 63	814	94	3881	-66.5	39.56	0.38
176	SLU 64	751	89	3595	-62.66	36.52	0.36
176	SLU 65	732	88	3565	-62.18	35.69	0.35
176	SLU 66	802	91	3578	-64.51	38.9	0.37
176	SLU 67	791	91	3560	-64.22	38.4	0.37
176	SLU 68	772	90	3540	-63.43	37.56	0.36
176	SLU 69	842	93	3553	-65.75	40.77	0.37
176	SLU 70	831	93	3535	-65.46	40.27	0.37
176	SLU 71	831	92	3546	-65.15	40.26	0.37
176	SLU 72	820	92	3528	-64.87	39.76	0.37
176	SLU 73	836	98	4057	-69.05	40.62	0.39
176	SLU 74	905	101	4069	-71.37	43.83	0.41
176	SLU 75	894	101	4051	-71.08	43.33	0.41
176	SLU 76	876	100	4032	-70.29	42.49	0.4
176	SLU 77	945	103	4045	-72.62	45.7	0.41
176	SLU 78	934	103	4027	-72.33	45.2	0.41
176	SLU 79	935	102	4037	-72.02	45.19	0.41
176	SLU 80	923	102	4019	-71.73	44.69	0.41
176	SLU 81	899	103	4297	-72.47	43.56	0.41
176	SLU 82	888	102	4279	-72.18	43.06	0.41
176	SLU 83	939	104	4273	-73.72	45.43	0.42
176	SLU 84	928	104	4255	-73.43	44.93	0.42
176	SLE RA 1	553	66	2683	-46.68	26.91	0.27
176	SLE RA 2	540	66	2663	-46.36	26.36	0.26
176	SLE RA 3	587	68	2672	-47.91	28.5	0.27
176	SLE RA 4	579	68	2660	-47.72	28.16	0.27
176	SLE RA 5	567	67	2647	-47.19	27.6	0.27
176	SLE RA 6	613	69	2655	-48.74	29.74	0.28
176	SLE RA 7	606	69	2643	-48.55	29.41	0.28

Nodo	Cont.	Reazione a traslazione			Reazione a rotazione		
Ind.	N.br.	x	y	z	x	y	z
176	SLE RA 8	606	68	2650	-48.34	29.4	0.27
176	SLE RA 9	599	68	2638	-48.15	29.07	0.27
176	SLE RA 10	609	72	2991	-50.94	29.64	0.29
176	SLE RA 11	656	74	2999	-52.49	31.78	0.3
176	SLE RA 12	648	74	2987	-52.29	31.45	0.3
176	SLE RA 13	636	73	2975	-51.77	30.89	0.29
176	SLE RA 14	682	75	2983	-53.32	33.03	0.3
176	SLE RA 15	675	75	2971	-53.12	32.7	0.3
176	SLE RA 16	675	75	2978	-52.92	32.69	0.3
176	SLE RA 17	668	75	2966	-52.73	32.36	0.3
176	SLE RA 18	651	75	3151	-53.22	31.61	0.3
176	SLE RA 19	644	75	3139	-53.03	31.27	0.3
176	SLE RA 20	678	77	3135	-54.05	32.85	0.31
176	SLE RA 21	671	76	3123	-53.86	32.52	0.31
176	SLE FR 1	553	66	2683	-46.68	26.91	0.27
176	SLE FR 2	550	66	2679	-46.62	26.8	0.26
176	SLE FR 3	563	66	2677	-47.01	27.41	0.27
176	SLE FR 4	580	69	2820	-48.58	28.21	0.28
176	SLE FR 5	593	69	2817	-48.97	28.82	0.28
176	SLE FR 6	602	71	2917	-49.95	29.26	0.28
176	SLE QP 1	553	66	2683	-46.68	26.91	0.27
176	SLE QP 2	582	69	2824	-48.64	28.32	0.28
176	SLD 1	1327	82	1386	-59.19	63.27	0.33
176	SLD 2	1327	82	1386	-59.19	63.27	0.33
176	SLD 3	1259	73	1226	-50.49	60.36	0.29
176	SLD 4	1259	73	1226	-50.49	60.36	0.29
176	SLD 5	908	87	2635	-64.99	43.22	0.34
176	SLD 6	908	87	2635	-64.99	43.22	0.34
176	SLD 7	683	56	2101	-36.01	33.52	0.23
176	SLD 8	683	56	2101	-36.01	33.52	0.23
176	SLD 9	482	81	3546	-61.27	23.12	0.32
176	SLD 10	482	81	3546	-61.27	23.12	0.32
176	SLD 11	257	51	3012	-32.29	13.42	0.21
176	SLD 12	257	51	3012	-32.29	13.42	0.21
176	SLD 13	-95	65	4421	-46.79	-3.73	0.26
176	SLD 14	-95	65	4421	-46.79	-3.73	0.26
176	SLD 15	-162	56	4261	-38.1	-6.63	0.23
176	SLD 16	-162	56	4261	-38.1	-6.63	0.23
176	SLV 1	2326	100	-526	-74	110.16	0.4
176	SLV 2	2326	100	-526	-74	110.16	0.4
176	SLV 3	2163	78	-928	-52.43	103.2	0.32
176	SLV 4	2163	78	-928	-52.43	103.2	0.32
176	SLV 5	1352	111	2429	-88.98	63.42	0.43
176	SLV 6	1352	111	2429	-88.98	63.42	0.43
176	SLV 7	810	39	1088	-17.05	40.23	0.17
176	SLV 8	810	39	1088	-17.05	40.23	0.17
176	SLV 9	355	99	4560	-80.23	16.41	0.38
176	SLV 10	355	99	4560	-80.23	16.41	0.38
176	SLV 11	-188	26	3218	-8.31	-6.79	0.12
176	SLV 12	-188	26	3218	-8.31	-6.79	0.12
176	SLV 13	-999	59	6576	-44.86	-46.57	0.24
176	SLV 14	-999	59	6576	-44.86	-46.57	0.24
176	SLV 15	-1162	38	6173	-23.28	-53.52	0.16
176	SLV 16	-1162	38	6173	-23.28	-53.52	0.16
177	SLU 1	11	18	858	-21.86	5.05	-3.11
177	SLU 2	5	18	855	-21.7	4.8	-3.09
177	SLU 3	38	19	803	-22.81	6.01	-3.25
177	SLU 4	35	19	801	-22.71	5.86	-3.23
177	SLU 5	28	19	805	-22.35	5.58	-3.18
177	SLU 6	61	19	754	-23.46	6.79	-3.34
177	SLU 7	58	20	752	-23.36	6.64	-3.33
177	SLU 8	56	19	759	-23.16	6.61	-3.3
177	SLU 9	53	19	757	-23.07	6.46	-3.29
177	SLU 10	8	22	1018	-25.17	5.85	-3.59
177	SLU 11	42	22	967	-26.28	7.07	-3.74
177	SLU 12	38	22	965	-26.18	6.92	-3.73
177	SLU 13	31	22	969	-25.82	6.63	-3.68
177	SLU 14	65	23	917	-26.93	7.85	-3.84
177	SLU 15	61	23	915	-26.83	7.7	-3.83
177	SLU 16	60	23	923	-26.63	7.67	-3.8
177	SLU 17	56	23	921	-26.54	7.52	-3.78
177	SLU 18	15	23	1092	-26.82	6.56	-3.82
177	SLU 19	12	23	1090	-26.72	6.41	-3.81
177	SLU 20	38	23	1042	-27.47	7.34	-3.91
177	SLU 21	35	24	1040	-27.37	7.19	-3.9
177	SLU 22	31	21	952	-25.36	6.48	-3.61
177	SLU 23	25	22	949	-25.2	6.23	-3.59
177	SLU 24	58	22	897	-26.3	7.45	-3.75
177	SLU 25	55	22	895	-26.21	7.29	-3.74
177	SLU 26	48	22	899	-25.85	7.01	-3.69
177	SLU 27	81	23	848	-26.95	8.23	-3.84
177	SLU 28	78	23	846	-26.86	8.07	-3.83
177	SLU 29	77	23	853	-26.66	8.04	-3.8
177	SLU 30	73	23	851	-26.56	7.89	-3.79
177	SLU 31	28	25	1112	-28.67	7.29	-4.09
177	SLU 32	62	26	1061	-29.77	8.5	-4.25
177	SLU 33	58	26	1059	-29.68	8.35	-4.24
177	SLU 34	51	26	1063	-29.32	8.07	-4.19
177	SLU 35	85	27	1011	-30.42	9.28	-4.34
177	SLU 36	81	27	1009	-30.33	9.13	-4.33

Nodo	Cont.	Reazione a traslazione			Reazione a rotazione		
Ind.	N.br.	x	y	z	x	y	z
177	SLU 37	80	26	1017	-30.13	9.1	-4.3
177	SLU 38	77	27	1015	-30.03	8.95	-4.29
177	SLU 39	35	26	1186	-30.31	7.99	-4.32
177	SLU 40	32	26	1184	-30.22	7.84	-4.31
177	SLU 41	58	27	1136	-30.96	8.77	-4.42
177	SLU 42	55	27	1134	-30.87	8.62	-4.41
177	SLU 43	7	22	1083	-27.22	6.07	-3.87
177	SLU 44	1	22	1080	-27.06	5.82	-3.85
177	SLU 45	34	23	1028	-28.17	7.03	-4.01
177	SLU 46	31	23	1026	-28.07	6.88	-3.99
177	SLU 47	24	23	1031	-27.71	6.6	-3.94
177	SLU 48	57	23	979	-28.82	7.81	-4.1
177	SLU 49	54	24	977	-28.72	7.66	-4.09
177	SLU 50	53	23	985	-28.52	7.63	-4.06
177	SLU 51	49	23	983	-28.43	7.48	-4.05
177	SLU 52	5	26	1244	-30.53	6.88	-4.35
177	SLU 53	38	26	1192	-31.64	8.09	-4.5
177	SLU 54	34	27	1190	-31.54	7.94	-4.49
177	SLU 55	27	26	1194	-31.18	7.66	-4.44
177	SLU 56	61	27	1142	-32.29	8.87	-4.6
177	SLU 57	57	27	1140	-32.19	8.72	-4.59
177	SLU 58	56	27	1148	-31.99	8.69	-4.56
177	SLU 59	53	27	1146	-31.9	8.54	-4.54
177	SLU 60	12	27	1317	-32.18	7.58	-4.58
177	SLU 61	8	27	1315	-32.08	7.43	-4.57
177	SLU 62	35	27	1267	-32.83	8.36	-4.68
177	SLU 63	31	28	1266	-32.73	8.21	-4.66
177	SLU 64	27	25	1177	-30.72	7.51	-4.37
177	SLU 65	21	26	1174	-30.56	7.25	-4.35
177	SLU 66	55	26	1122	-31.66	8.47	-4.51
177	SLU 67	51	27	1120	-31.57	8.32	-4.5
177	SLU 68	44	26	1125	-31.21	8.03	-4.45
177	SLU 69	78	27	1073	-32.31	9.25	-4.6
177	SLU 70	74	27	1071	-32.22	9.1	-4.59
177	SLU 71	73	27	1079	-32.02	9.07	-4.56
177	SLU 72	70	27	1077	-31.92	8.92	-4.55
177	SLU 73	25	29	1337	-34.03	8.31	-4.85
177	SLU 74	58	30	1286	-35.13	9.52	-5.01
177	SLU 75	55	30	1284	-35.04	9.37	-5
177	SLU 76	48	30	1288	-34.68	9.09	-4.95
177	SLU 77	81	31	1236	-35.78	10.31	-5.1
177	SLU 78	78	31	1234	-35.69	10.15	-5.09
177	SLU 79	76	30	1242	-35.49	10.12	-5.06
177	SLU 80	73	31	1240	-35.39	9.97	-5.05
177	SLU 81	32	30	1411	-35.67	9.02	-5.08
177	SLU 82	28	31	1409	-35.58	8.86	-5.07
177	SLU 83	55	31	1361	-36.32	9.8	-5.18
177	SLU 84	51	31	1359	-36.23	9.64	-5.17
177	SLE RA 1	16	19	885	-22.86	5.46	-3.25
177	SLE RA 2	13	19	883	-22.76	5.29	-3.24
177	SLE RA 3	35	19	848	-23.49	6.1	-3.34
177	SLE RA 4	33	19	847	-23.43	6	-3.34
177	SLE RA 5	28	19	850	-23.19	5.81	-3.3
177	SLE RA 6	50	20	815	-23.92	6.62	-3.41
177	SLE RA 7	48	20	814	-23.86	6.52	-3.4
177	SLE RA 8	47	20	819	-23.73	6.5	-3.38
177	SLE RA 9	45	20	818	-23.66	6.4	-3.37
177	SLE RA 10	15	21	992	-25.07	5.99	-3.57
177	SLE RA 11	37	22	957	-25.8	6.8	-3.68
177	SLE RA 12	35	22	956	-25.74	6.7	-3.67
177	SLE RA 13	30	22	959	-25.5	6.51	-3.63
177	SLE RA 14	52	22	924	-26.24	7.32	-3.74
177	SLE RA 15	50	22	923	-26.17	7.22	-3.73
177	SLE RA 16	49	22	928	-26.04	7.2	-3.71
177	SLE RA 17	47	22	927	-25.98	7.1	-3.7
177	SLE RA 18	19	22	1041	-26.16	6.47	-3.73
177	SLE RA 19	17	22	1039	-26.1	6.36	-3.72
177	SLE RA 20	35	22	1008	-26.6	6.99	-3.79
177	SLE RA 21	33	23	1006	-26.53	6.88	-3.78
177	SLE FR 1	16	19	885	-22.86	5.46	-3.25
177	SLE FR 2	16	19	885	-22.84	5.42	-3.25
177	SLE FR 3	22	19	872	-23.03	5.67	-3.28
177	SLE FR 4	17	20	931	-23.83	5.73	-3.39
177	SLE FR 5	23	20	918	-24.02	5.97	-3.42
177	SLE FR 6	18	20	963	-24.51	5.96	-3.49
177	SLE QP 1	16	19	885	-22.86	5.46	-3.25
177	SLE QP 2	17	20	932	-23.85	5.76	-3.39
177	SLD 1	563	6	-497	-28.5	22.53	-4.14
177	SLD 2	563	6	-497	-28.5	22.53	-4.14
177	SLD 3	525	44	-623	-25	21.29	-3.47
177	SLD 4	525	44	-623	-25	21.29	-3.47
177	SLD 5	238	-41	695	-30.56	12.66	-4.64
177	SLD 6	238	-41	695	-30.56	12.66	-4.64
177	SLD 7	112	84	273	-18.89	8.55	-2.39
177	SLD 8	112	84	273	-18.89	8.55	-2.39
177	SLD 9	-78	-44	1590	-28.81	2.97	-4.39
177	SLD 10	-78	-44	1590	-28.81	2.97	-4.39
177	SLD 11	-204	80	1168	-17.15	-1.14	-2.15
177	SLD 12	-204	80	1168	-17.15	-1.14	-2.15
177	SLD 13	-490	-5	2486	-22.7	-9.77	-3.32

Nodo	Cont.	Reazione a traslazione			Reazione a rotazione		
Ind.	N.br.	x	y	z	x	y	z
177	SLD 14	-490	-5	2486	-22.7	-9.77	-3.32
177	SLD 15	-528	33	2360	-19.2	-11.01	-2.64
177	SLD 16	-528	33	2360	-19.2	-11.01	-2.64
177	SLV 1	1294	-15	-2401	-34.88	45.01	-5.2
177	SLV 2	1294	-15	-2401	-34.88	45.01	-5.2
177	SLV 3	1203	81	-2714	-26.41	42.07	-3.52
177	SLV 4	1203	81	-2714	-26.41	42.07	-3.52
177	SLV 5	537	-135	408	-40	21.99	-6.47
177	SLV 6	537	-135	408	-40	21.99	-6.47
177	SLV 7	236	183	-638	-11.78	12.2	-0.9
177	SLV 8	236	183	-638	-11.78	12.2	-0.9
177	SLV 9	-201	-143	2501	-35.93	-0.68	-5.89
177	SLV 10	-201	-143	2501	-35.93	-0.68	-5.89
177	SLV 11	-503	175	1456	-7.7	-10.47	-0.32
177	SLV 12	-503	175	1456	-7.7	-10.47	-0.32
177	SLV 13	-1169	-41	4578	-21.29	-30.55	-3.26
177	SLV 14	-1169	-41	4578	-21.29	-30.55	-3.26
177	SLV 15	-1259	54	4264	-12.82	-33.49	-1.59
177	SLV 16	-1259	54	4264	-12.82	-33.49	-1.59
178	SLU 1	1440	-529	6417	8.04	-324.9	-74.66
178	SLU 2	1371	-382	5913	2.79	-284.43	-52.63
178	SLU 3	1510	-544	6677	8.11	-335.66	-76.66
178	SLU 4	1468	-455	6375	4.95	-311.38	-63.44
178	SLU 5	1425	-391	6105	2.78	-291.74	-53.85
178	SLU 6	1564	-553	6869	8.1	-342.97	-77.87
178	SLU 7	1522	-464	6567	4.95	-318.69	-64.65
178	SLU 8	1548	-547	6800	8.03	-339.51	-77.09
178	SLU 9	1507	-459	6498	4.88	-315.23	-63.87
178	SLU 10	1650	-461	7074	3.72	-338.84	-63.71
178	SLU 11	1788	-623	7838	9.03	-390.07	-87.73
178	SLU 12	1747	-534	7536	5.88	-365.79	-74.51
178	SLU 13	1704	-470	7266	3.71	-346.15	-64.92
178	SLU 14	1842	-632	8030	9.03	-397.38	-88.94
178	SLU 15	1801	-543	7728	5.87	-373.1	-75.73
178	SLU 16	1827	-626	7961	8.95	-393.92	-88.16
178	SLU 17	1785	-538	7659	5.8	-369.64	-74.95
178	SLU 18	1838	-642	8075	9.37	-402.62	-90.48
178	SLU 19	1797	-554	7773	6.21	-378.34	-77.27
178	SLU 20	1892	-651	8267	9.36	-409.93	-91.7
178	SLU 21	1851	-563	7965	6.21	-385.65	-78.48
178	SLU 22	1694	-603	7481	8.85	-375.17	-84.89
178	SLU 23	1625	-455	6977	3.59	-334.7	-62.87
178	SLU 24	1763	-617	7741	8.91	-385.93	-86.89
178	SLU 25	1722	-529	7439	5.76	-361.65	-73.67
178	SLU 26	1679	-464	7169	3.59	-342.01	-64.08
178	SLU 27	1817	-626	7933	8.9	-393.24	-88.1
178	SLU 28	1776	-538	7631	5.75	-368.96	-74.88
178	SLU 29	1801	-620	7865	8.83	-389.79	-87.32
178	SLU 30	1760	-532	7562	5.68	-365.51	-74.1
178	SLU 31	1903	-534	8138	4.52	-389.11	-73.94
178	SLU 32	2041	-696	8902	9.84	-440.34	-97.96
178	SLU 33	2000	-608	8600	6.68	-416.06	-84.74
178	SLU 34	1957	-543	8330	4.51	-396.42	-75.15
178	SLU 35	2095	-705	9094	9.83	-447.65	-99.17
178	SLU 36	2054	-616	8792	6.68	-423.37	-85.96
178	SLU 37	2080	-699	9026	9.76	-444.2	-98.4
178	SLU 38	2039	-611	8723	6.6	-419.91	-85.18
178	SLU 39	2091	-715	9139	10.17	-452.89	-100.71
178	SLU 40	2050	-627	8837	7.02	-428.61	-87.5
178	SLU 41	2145	-724	9331	10.16	-460.2	-101.93
178	SLU 42	2104	-636	9029	7.01	-435.92	-88.71
178	SLU 43	1786	-663	7977	10.18	-405.13	-93.56
178	SLU 44	1717	-516	7473	4.93	-364.66	-71.53
178	SLU 45	1855	-678	8237	10.25	-415.89	-95.55
178	SLU 46	1814	-589	7935	7.09	-391.61	-82.33
178	SLU 47	1771	-525	7665	4.92	-371.97	-72.74
178	SLU 48	1909	-686	8429	10.24	-423.2	-96.76
178	SLU 49	1868	-598	8127	7.09	-398.92	-83.54
178	SLU 50	1894	-681	8361	10.17	-419.75	-95.98
178	SLU 51	1852	-592	8058	7.01	-395.47	-82.76
178	SLU 52	1995	-595	8634	5.85	-419.07	-82.6
178	SLU 53	2134	-757	9398	11.17	-470.3	-106.62
178	SLU 54	2092	-668	9096	8.02	-446.02	-93.4
178	SLU 55	2049	-604	8826	5.85	-426.38	-83.81
178	SLU 56	2187	-765	9590	11.16	-477.61	-107.84
178	SLU 57	2146	-677	9288	8.01	-453.33	-94.62
178	SLU 58	2172	-760	9522	11.09	-474.16	-107.06
178	SLU 59	2131	-671	9219	7.94	-449.87	-93.84
178	SLU 60	2184	-776	9635	11.51	-482.86	-109.38
178	SLU 61	2142	-687	9333	8.35	-458.57	-96.16
178	SLU 62	2238	-785	9827	11.5	-490.16	-110.59
178	SLU 63	2196	-696	9525	8.35	-465.88	-97.37
178	SLU 64	2039	-736	9041	10.98	-455.4	-103.79
178	SLU 65	1970	-589	8537	5.73	-414.93	-81.76
178	SLU 66	2108	-751	9301	11.05	-466.16	-105.78
178	SLU 67	2067	-662	8999	7.9	-441.88	-92.56
178	SLU 68	2024	-598	8729	5.72	-422.24	-82.97
178	SLU 69	2162	-760	9493	11.04	-473.47	-106.99
178	SLU 70	2121	-671	9191	7.89	-449.19	-93.77
178	SLU 71	2147	-754	9425	10.97	-470.02	-106.21

Nodo	Cont.	Reazione a traslazione			Reazione a rotazione		
Ind.	N.br.	x	y	z	x	y	z
178	SLU 72	2105	-666	9123	7.82	-445.74	-93
178	SLU 73	2249	-668	9698	6.66	-469.34	-92.83
178	SLU 74	2387	-830	10462	11.97	-520.57	-116.85
178	SLU 75	2345	-741	10160	8.82	-496.29	-103.64
178	SLU 76	2302	-677	9890	6.65	-476.65	-94.04
178	SLU 77	2441	-839	10654	11.97	-527.88	-118.07
178	SLU 78	2399	-750	10352	8.81	-503.6	-104.85
178	SLU 79	2425	-833	10586	11.9	-524.43	-117.29
178	SLU 80	2384	-745	10284	8.74	-500.15	-104.07
178	SLU 81	2437	-849	10700	12.31	-533.13	-119.61
178	SLU 82	2395	-761	10397	9.16	-508.85	-106.39
178	SLU 83	2491	-858	10891	12.3	-540.44	-120.82
178	SLU 84	2449	-770	10589	9.15	-516.16	-107.6
178	SLE RA 1	1513	-550	6721	8.27	-339.26	-77.59
178	SLE RA 2	1467	-452	6385	4.77	-312.28	-62.9
178	SLE RA 3	1559	-560	6894	8.32	-346.44	-78.92
178	SLE RA 4	1531	-501	6693	6.21	-330.25	-70.1
178	SLE RA 5	1503	-458	6513	4.77	-317.15	-63.71
178	SLE RA 6	1595	-566	7022	8.31	-351.31	-79.72
178	SLE RA 7	1567	-507	6821	6.21	-335.12	-70.91
178	SLE RA 8	1585	-562	6977	8.26	-349	-79.2
178	SLE RA 9	1557	-503	6775	6.16	-332.82	-70.39
178	SLE RA 10	1652	-505	7159	5.39	-348.55	-70.28
178	SLE RA 11	1745	-613	7668	8.93	-382.71	-86.3
178	SLE RA 12	1717	-554	7467	6.83	-366.52	-77.49
178	SLE RA 13	1688	-511	7287	5.38	-353.43	-71.09
178	SLE RA 14	1781	-618	7796	8.93	-387.58	-87.11
178	SLE RA 15	1753	-560	7595	6.83	-371.39	-78.3
178	SLE RA 16	1770	-615	7751	8.88	-385.28	-86.59
178	SLE RA 17	1743	-556	7549	6.78	-369.09	-77.78
178	SLE RA 18	1778	-625	7826	9.16	-391.08	-88.13
178	SLE RA 19	1750	-567	7625	7.05	-374.89	-79.32
178	SLE RA 20	1814	-631	7954	9.15	-395.95	-88.94
178	SLE RA 21	1786	-572	7753	7.05	-379.76	-80.13
178	SLE FR 1	1513	-550	6721	8.27	-339.26	-77.59
178	SLE FR 2	1504	-531	6654	7.57	-333.86	-74.65
178	SLE FR 3	1527	-553	6772	8.27	-341.21	-77.91
178	SLE FR 4	1583	-553	6985	7.84	-349.41	-77.81
178	SLE FR 5	1607	-575	7104	8.54	-356.75	-81.07
178	SLE FR 6	1645	-588	7274	8.71	-365.17	-82.86
178	SLE QP 1	1513	-550	6721	8.27	-339.26	-77.59
178	SLE QP 2	1592	-573	7052	8.54	-354.8	-80.75
178	SLD 1	2514	-571	9244	8.22	-378.35	-80.19
178	SLD 2	2514	-571	9244	8.22	-378.35	-80.19
178	SLD 3	2644	-794	10008	16.31	-437.24	-114.1
178	SLD 4	2644	-794	10008	16.31	-437.24	-114.1
178	SLD 5	1671	-235	6551	-3.82	-272.56	-29.15
178	SLD 6	1671	-235	6551	-3.82	-272.56	-29.15
178	SLD 7	2105	-977	9098	23.13	-468.84	-142.19
178	SLD 8	2105	-977	9098	23.13	-468.84	-142.19
178	SLD 9	1079	-169	5007	-6.06	-240.77	-19.31
178	SLD 10	1079	-169	5007	-6.06	-240.77	-19.31
178	SLD 11	1513	-911	7554	20.9	-437.05	-132.35
178	SLD 12	1513	-911	7554	20.9	-437.05	-132.35
178	SLD 13	540	-352	4097	0.77	-272.37	-47.4
178	SLD 14	540	-352	4097	0.77	-272.37	-47.4
178	SLD 15	670	-575	4861	8.85	-331.26	-81.32
178	SLD 16	670	-575	4861	8.85	-331.26	-81.32
178	SLV 1	3744	-565	12151	7.69	-408.33	-78.8
178	SLV 2	3744	-565	12151	7.69	-408.33	-78.8
178	SLV 3	4060	-1104	14008	27.2	-551.4	-160.93
178	SLV 4	4060	-1104	14008	27.2	-551.4	-160.93
178	SLV 5	1758	247	5764	-21.31	-153.86	44.4
178	SLV 6	1758	247	5764	-21.31	-153.86	44.4
178	SLV 7	2812	-1549	11957	43.73	-630.79	-229.36
178	SLV 8	2812	-1549	11957	43.73	-630.79	-229.36
178	SLV 9	373	403	2148	-26.66	-78.82	67.86
178	SLV 10	373	403	2148	-26.66	-78.82	67.86
178	SLV 11	1426	-1392	8341	38.39	-555.75	-205.9
178	SLV 12	1426	-1392	8341	38.39	-555.75	-205.9
178	SLV 13	-875	-42	97	-10.12	-158.2	-0.58
178	SLV 14	-875	-42	97	-10.12	-158.2	-0.58
178	SLV 15	-559	-581	1954	9.39	-301.28	-82.7
178	SLV 16	-559	-581	1954	9.39	-301.28	-82.7
180	SLU 1	438	3	6188	-2.96	49.44	-0.18
180	SLU 2	504	5	5836	-3.75	44.63	-0.3
180	SLU 3	468	3	6412	-3.11	52.24	-0.19
180	SLU 4	507	4	6201	-3.58	49.36	-0.27
180	SLU 5	530	5	5997	-3.85	46.91	-0.31
180	SLU 6	493	3	6573	-3.21	54.52	-0.2
180	SLU 7	533	4	6362	-3.69	51.64	-0.27
180	SLU 8	490	3	6509	-3.17	53.99	-0.19
180	SLU 9	529	4	6298	-3.64	51.11	-0.27
180	SLU 10	612	5	6960	-4.3	54.36	-0.34
180	SLU 11	575	3	7537	-3.66	61.97	-0.22
180	SLU 12	615	5	7325	-4.14	59.09	-0.3
180	SLU 13	637	6	7121	-4.4	56.64	-0.35
180	SLU 14	601	3	7697	-3.77	64.24	-0.23
180	SLU 15	641	5	7486	-4.24	61.36	-0.31
180	SLU 16	597	3	7634	-3.72	63.72	-0.23

Nodo	Cont.	Reazione a traslazione			Reazione a rotazione		
Ind.	N.br.	x	y	z	x	y	z
180	SLU 17	637	5	7422	-4.19	60.84	-0.3
180	SLU 18	592	3	7794	-3.75	63.33	-0.23
180	SLU 19	631	5	7583	-4.22	60.45	-0.3
180	SLU 20	617	3	7955	-3.85	65.61	-0.23
180	SLU 21	657	5	7744	-4.33	62.73	-0.31
180	SLU 22	530	3	7210	-3.51	58.2	-0.22
180	SLU 23	596	5	6858	-4.29	53.4	-0.34
180	SLU 24	560	3	7434	-3.66	61.01	-0.23
180	SLU 25	600	5	7223	-4.13	58.13	-0.3
180	SLU 26	622	6	7019	-4.4	55.68	-0.35
180	SLU 27	586	3	7595	-3.76	63.29	-0.24
180	SLU 28	625	5	7384	-4.23	60.4	-0.31
180	SLU 29	582	3	7531	-3.71	62.76	-0.23
180	SLU 30	621	5	7320	-4.18	59.88	-0.31
180	SLU 31	704	6	7982	-4.85	63.13	-0.38
180	SLU 32	667	4	8558	-4.21	70.73	-0.26
180	SLU 33	707	5	8347	-4.68	67.85	-0.34
180	SLU 34	730	6	8143	-4.95	65.41	-0.38
180	SLU 35	693	4	8719	-4.31	73.01	-0.27
180	SLU 36	733	5	8508	-4.78	70.13	-0.35
180	SLU 37	689	4	8655	-4.26	72.49	-0.27
180	SLU 38	729	5	8444	-4.74	69.61	-0.34
180	SLU 39	684	4	8816	-4.3	72.1	-0.26
180	SLU 40	724	5	8605	-4.77	69.22	-0.34
180	SLU 41	710	4	8976	-4.4	74.38	-0.27
180	SLU 42	749	5	8765	-4.87	71.5	-0.35
180	SLU 43	538	3	7694	-3.66	61.26	-0.22
180	SLU 44	604	5	7343	-4.45	56.46	-0.34
180	SLU 45	567	3	7919	-3.81	64.06	-0.23
180	SLU 46	607	5	7707	-4.29	61.18	-0.31
180	SLU 47	630	6	7503	-4.55	58.74	-0.35
180	SLU 48	593	3	8079	-3.92	66.34	-0.24
180	SLU 49	633	5	7868	-4.39	63.46	-0.31
180	SLU 50	589	3	8016	-3.87	65.82	-0.23
180	SLU 51	629	5	7804	-4.34	62.94	-0.31
180	SLU 52	712	6	8467	-5	66.19	-0.38
180	SLU 53	675	4	9043	-4.37	73.79	-0.27
180	SLU 54	715	5	8832	-4.84	70.91	-0.34
180	SLU 55	737	6	8627	-5.11	68.47	-0.39
180	SLU 56	701	4	9203	-4.47	76.07	-0.27
180	SLU 57	740	5	8992	-4.94	73.19	-0.35
180	SLU 58	697	4	9140	-4.42	75.54	-0.27
180	SLU 59	737	5	8929	-4.89	72.66	-0.34
180	SLU 60	692	4	9300	-4.45	75.16	-0.27
180	SLU 61	731	5	9089	-4.93	72.28	-0.34
180	SLU 62	717	4	9461	-4.56	77.43	-0.28
180	SLU 63	757	5	9250	-5.03	74.55	-0.35
180	SLU 64	630	4	8716	-4.21	70.03	-0.26
180	SLU 65	696	6	8364	-5	65.23	-0.38
180	SLU 66	660	4	8940	-4.36	72.83	-0.27
180	SLU 67	699	5	8729	-4.83	69.95	-0.34
180	SLU 68	722	6	8525	-5.1	67.51	-0.39
180	SLU 69	685	4	9101	-4.46	75.11	-0.28
180	SLU 70	725	5	8890	-4.93	72.23	-0.35
180	SLU 71	682	4	9037	-4.41	74.58	-0.27
180	SLU 72	721	5	8826	-4.89	71.7	-0.35
180	SLU 73	804	7	9488	-5.55	74.96	-0.42
180	SLU 74	767	4	10064	-4.91	82.56	-0.3
180	SLU 75	807	6	9853	-5.38	79.68	-0.38
180	SLU 76	829	7	9649	-5.65	77.23	-0.42
180	SLU 77	793	5	10225	-5.01	84.84	-0.31
180	SLU 78	833	6	10014	-5.49	81.96	-0.39
180	SLU 79	789	4	10161	-4.97	84.31	-0.31
180	SLU 80	829	6	9950	-5.44	81.43	-0.38
180	SLU 81	784	4	10322	-5	83.93	-0.31
180	SLU 82	823	6	10111	-5.47	81.04	-0.38
180	SLU 83	809	5	10483	-5.1	86.2	-0.31
180	SLU 84	849	6	10271	-5.57	83.32	-0.39
180	SLE RA 1	464	3	6480	-3.12	51.94	-0.19
180	SLE RA 2	508	4	6246	-3.64	48.74	-0.27
180	SLE RA 3	484	3	6630	-3.22	53.81	-0.2
180	SLE RA 4	511	4	6489	-3.53	51.89	-0.25
180	SLE RA 5	526	4	6353	-3.71	50.26	-0.28
180	SLE RA 6	501	3	6737	-3.29	55.33	-0.2
180	SLE RA 7	528	4	6596	-3.6	53.41	-0.25
180	SLE RA 8	499	3	6694	-3.25	54.98	-0.2
180	SLE RA 9	525	4	6553	-3.57	53.06	-0.25
180	SLE RA 10	580	5	6995	-4.01	55.23	-0.3
180	SLE RA 11	556	3	7379	-3.59	60.29	-0.22
180	SLE RA 12	582	4	7238	-3.9	58.37	-0.27
180	SLE RA 13	597	5	7102	-4.08	56.74	-0.3
180	SLE RA 14	573	3	7486	-3.65	61.81	-0.23
180	SLE RA 15	599	4	7345	-3.97	59.89	-0.28
180	SLE RA 16	570	3	7444	-3.62	61.46	-0.22
180	SLE RA 17	597	4	7303	-3.94	59.54	-0.27
180	SLE RA 18	567	3	7551	-3.64	61.21	-0.22
180	SLE RA 19	593	4	7410	-3.96	59.29	-0.27
180	SLE RA 20	584	3	7658	-3.71	62.72	-0.23
180	SLE RA 21	610	4	7517	-4.03	60.8	-0.28
180	SLE FR 1	464	3	6480	-3.12	51.94	-0.19

Nodo	Cont.	Reazione a traslazione			Reazione a rotazione		
Ind.	N.br.	x	y	z	x	y	z
180	SLE FR 2	473	3	6433	-3.22	51.3	-0.21
180	SLE FR 3	471	3	6523	-3.15	52.55	-0.19
180	SLE FR 4	504	3	6754	-3.38	54.08	-0.22
180	SLE FR 5	502	3	6844	-3.3	55.33	-0.2
180	SLE FR 6	516	3	7015	-3.38	56.57	-0.21
180	SLE QP 1	464	3	6480	-3.12	51.94	-0.19
180	SLE QP 2	495	3	6801	-3.28	54.72	-0.2
180	SLD 1	1251	0	8086	-3.69	104.19	-0.3
180	SLD 2	1251	0	8086	-3.69	104.19	-0.3
180	SLD 3	1142	-6	8597	-0.75	114.25	0.27
180	SLD 4	1142	-6	8597	-0.75	114.25	0.27
180	SLD 5	886	11	6412	-7.85	54.31	-1.09
180	SLD 6	886	11	6412	-7.85	54.31	-1.09
180	SLD 7	525	-9	8115	1.93	87.83	0.81
180	SLD 8	525	-9	8115	1.93	87.83	0.81
180	SLD 9	466	14	5488	-8.48	21.61	-1.2
180	SLD 10	466	14	5488	-8.48	21.61	-1.2
180	SLD 11	104	-5	7190	1.3	55.13	0.69
180	SLD 12	104	-5	7190	1.3	55.13	0.69
180	SLD 13	-152	12	5005	-5.8	-4.81	-0.67
180	SLD 14	-152	12	5005	-5.8	-4.81	-0.67
180	SLD 15	-261	6	5516	-2.87	5.25	-0.1
180	SLD 16	-261	6	5516	-2.87	5.25	-0.1
180	SLV 1	2267	-4	9788	-4.27	170.12	-0.43
180	SLV 2	2267	-4	9788	-4.27	170.12	-0.43
180	SLV 3	2006	-18	11033	2.7	194.39	0.92
180	SLV 4	2006	-18	11033	2.7	194.39	0.92
180	SLV 5	1422	22	5809	-14.14	52.53	-2.31
180	SLV 6	1422	22	5809	-14.14	52.53	-2.31
180	SLV 7	553	-25	9959	9.08	133.43	2.18
180	SLV 8	553	-25	9959	9.08	133.43	2.18
180	SLV 9	437	30	3644	-15.63	-23.99	-2.58
180	SLV 10	437	30	3644	-15.63	-23.99	-2.58
180	SLV 11	-431	-16	7793	7.58	56.91	1.92
180	SLV 12	-431	-16	7793	7.58	56.91	1.92
180	SLV 13	-1016	24	2570	-9.25	-84.95	-1.32
180	SLV 14	-1016	24	2570	-9.25	-84.95	-1.32
180	SLV 15	-1276	10	3814	-2.28	-60.68	0.03
180	SLV 16	-1276	10	3814	-2.28	-60.68	0.03
181	SLU 1	111	15	5721	-14.87	18.42	1.21
181	SLU 2	211	15	5497	-15.23	24.27	1.2
181	SLU 3	137	15	5912	-15.5	20.58	1.26
181	SLU 4	196	15	5777	-15.71	24.09	1.26
181	SLU 5	236	15	5631	-15.64	26.24	1.24
181	SLU 6	162	15	6046	-15.91	22.55	1.3
181	SLU 7	222	16	5911	-16.13	26.06	1.3
181	SLU 8	162	15	5990	-15.7	22.37	1.28
181	SLU 9	221	15	5855	-15.92	25.88	1.28
181	SLU 10	267	17	6547	-17.75	29.67	1.41
181	SLU 11	193	18	6962	-18.02	25.99	1.47
181	SLU 12	253	18	6827	-18.24	29.49	1.46
181	SLU 13	292	18	6681	-18.17	31.65	1.44
181	SLU 14	218	18	7096	-18.43	27.96	1.5
181	SLU 15	278	18	6961	-18.65	31.47	1.5
181	SLU 16	218	18	7040	-18.22	27.78	1.48
181	SLU 17	278	18	6905	-18.44	31.29	1.48
181	SLU 18	192	18	7222	-18.47	26.15	1.5
181	SLU 19	251	18	7087	-18.69	29.65	1.5
181	SLU 20	217	18	7356	-18.89	28.12	1.54
181	SLU 21	276	19	7221	-19.1	31.63	1.53
181	SLU 22	155	17	6665	-17.34	23.09	1.41
181	SLU 23	255	17	6441	-17.7	28.93	1.41
181	SLU 24	181	17	6856	-17.96	25.24	1.46
181	SLU 25	240	18	6721	-18.18	28.75	1.46
181	SLU 26	280	18	6575	-18.11	30.91	1.44
181	SLU 27	206	18	6990	-18.38	27.22	1.5
181	SLU 28	266	18	6855	-18.6	30.73	1.5
181	SLU 29	206	18	6933	-18.17	27.04	1.48
181	SLU 30	265	18	6799	-18.38	30.55	1.48
181	SLU 31	311	20	7491	-20.22	34.34	1.61
181	SLU 32	237	20	7906	-20.49	30.65	1.67
181	SLU 33	297	20	7771	-20.7	34.16	1.67
181	SLU 34	336	20	7625	-20.63	36.32	1.65
181	SLU 35	262	20	8040	-20.9	32.63	1.7
181	SLU 36	322	21	7905	-21.12	36.14	1.7
181	SLU 37	262	20	7984	-20.69	32.45	1.69
181	SLU 38	322	20	7849	-20.91	35.96	1.69
181	SLU 39	236	20	8166	-20.94	30.81	1.7
181	SLU 40	295	21	8031	-21.16	34.32	1.7
181	SLU 41	261	21	8300	-21.35	32.79	1.74
181	SLU 42	320	21	8165	-21.57	36.3	1.74
181	SLU 43	129	18	7114	-18.48	22.34	1.5
181	SLU 44	229	18	6890	-18.84	28.19	1.5
181	SLU 45	155	19	7305	-19.11	24.5	1.55
181	SLU 46	215	19	7170	-19.33	28.01	1.55
181	SLU 47	254	19	7024	-19.26	30.17	1.53
181	SLU 48	180	19	7439	-19.53	26.48	1.59
181	SLU 49	240	19	7304	-19.74	29.99	1.59
181	SLU 50	180	19	7382	-19.31	26.3	1.57
181	SLU 51	240	19	7248	-19.53	29.81	1.57

Nodo	Cont.	Reazione a traslazione			Reazione a rotazione		
Ind.	N.br.	x	y	z	x	y	z
181	SLU 52	285	21	7940	-21.36	33.6	1.7
181	SLU 53	211	21	8355	-21.63	29.91	1.76
181	SLU 54	271	21	8220	-21.85	33.42	1.76
181	SLU 55	310	21	8074	-21.78	35.58	1.74
181	SLU 56	236	21	8489	-22.05	31.89	1.79
181	SLU 57	296	22	8354	-22.27	35.4	1.79
181	SLU 58	236	21	8433	-21.84	31.71	1.78
181	SLU 59	296	21	8298	-22.05	35.22	1.78
181	SLU 60	210	22	8615	-22.08	30.07	1.79
181	SLU 61	270	22	8480	-22.3	33.58	1.79
181	SLU 62	235	22	8749	-22.5	32.05	1.83
181	SLU 63	295	22	8614	-22.72	35.56	1.83
181	SLU 64	173	20	8058	-20.95	27.01	1.7
181	SLU 65	273	21	7833	-21.31	32.86	1.7
181	SLU 66	199	21	8249	-21.58	29.17	1.76
181	SLU 67	259	21	8114	-21.8	32.68	1.75
181	SLU 68	298	21	7968	-21.73	34.84	1.74
181	SLU 69	224	21	8383	-21.99	31.15	1.79
181	SLU 70	284	22	8248	-22.21	34.66	1.79
181	SLU 71	224	21	8326	-21.78	30.97	1.77
181	SLU 72	284	21	8191	-22	34.47	1.77
181	SLU 73	329	23	8884	-23.83	38.27	1.9
181	SLU 74	255	24	9299	-24.1	34.58	1.96
181	SLU 75	315	24	9164	-24.32	38.09	1.96
181	SLU 76	354	24	9018	-24.25	40.24	1.94
181	SLU 77	280	24	9433	-24.52	36.56	2
181	SLU 78	340	24	9298	-24.73	40.06	2
181	SLU 79	280	24	9377	-24.3	36.38	1.98
181	SLU 80	340	24	9242	-24.52	39.88	1.98
181	SLU 81	254	24	9559	-24.55	34.74	1.99
181	SLU 82	314	24	9424	-24.77	38.25	1.99
181	SLU 83	279	24	9693	-24.97	36.72	2.03
181	SLU 84	339	25	9558	-25.18	40.22	2.03
181	SLE RA 1	124	15	5991	-15.57	19.75	1.26
181	SLE RA 2	190	15	5841	-15.81	23.65	1.26
181	SLE RA 3	141	16	6118	-15.99	21.19	1.3
181	SLE RA 4	181	16	6028	-16.14	23.53	1.3
181	SLE RA 5	207	16	5931	-16.09	24.97	1.29
181	SLE RA 6	158	16	6207	-16.27	22.51	1.32
181	SLE RA 7	197	16	6118	-16.41	24.85	1.32
181	SLE RA 8	157	16	6170	-16.13	22.39	1.31
181	SLE RA 9	197	16	6080	-16.27	24.73	1.31
181	SLE RA 10	228	17	6542	-17.49	27.26	1.4
181	SLE RA 11	178	17	6818	-17.67	24.8	1.44
181	SLE RA 12	218	17	6728	-17.82	27.14	1.44
181	SLE RA 13	244	17	6631	-17.77	28.57	1.42
181	SLE RA 14	195	17	6908	-17.95	26.12	1.46
181	SLE RA 15	235	18	6818	-18.1	28.45	1.46
181	SLE RA 16	195	17	6870	-17.81	26	1.45
181	SLE RA 17	235	17	6780	-17.95	28.33	1.45
181	SLE RA 18	177	18	6992	-17.97	24.9	1.46
181	SLE RA 19	217	18	6902	-18.12	27.24	1.46
181	SLE RA 20	194	18	7081	-18.25	26.22	1.48
181	SLE RA 21	234	18	6991	-18.4	28.56	1.48
181	SLE FR 1	124	15	5991	-15.57	19.75	1.26
181	SLE FR 2	137	15	5961	-15.62	20.53	1.26
181	SLE FR 3	130	15	6027	-15.68	20.28	1.27
181	SLE FR 4	153	16	6261	-16.34	22.08	1.32
181	SLE FR 5	147	16	6327	-16.4	21.83	1.33
181	SLE FR 6	151	16	6491	-16.77	22.33	1.36
181	SLE QP 1	124	15	5991	-15.57	19.75	1.26
181	SLE QP 2	140	16	6291	-16.29	21.3	1.32
181	SLD 1	1181	13	7089	-18.22	89.06	1.75
181	SLD 2	1181	13	7089	-18.22	89.06	1.75
181	SLD 3	1022	6	7411	-9.77	80.15	1.13
181	SLD 4	1022	6	7411	-9.77	80.15	1.13
181	SLD 5	693	25	6043	-29.68	55.13	2.38
181	SLD 6	693	25	6043	-29.68	55.13	2.38
181	SLD 7	163	2	7115	-1.53	25.45	0.33
181	SLD 8	163	2	7115	-1.53	25.45	0.33
181	SLD 9	116	29	5468	-31.06	17.15	2.31
181	SLD 10	116	29	5468	-31.06	17.15	2.31
181	SLD 11	-414	7	6540	-2.91	-12.54	0.26
181	SLD 12	-414	7	6540	-2.91	-12.54	0.26
181	SLD 13	-742	26	5172	-22.81	-37.56	1.51
181	SLD 14	-742	26	5172	-22.81	-37.56	1.51
181	SLD 15	-901	19	5493	-14.37	-46.46	0.9
181	SLD 16	-901	19	5493	-14.37	-46.46	0.9
181	SLV 1	2580	8	8143	-20.79	180.14	2.32
181	SLV 2	2580	8	8143	-20.79	180.14	2.32
181	SLV 3	2199	-8	8932	-0.96	158.69	0.88
181	SLV 4	2199	-8	8932	-0.96	158.69	0.88
181	SLV 5	1450	38	5651	-47.72	101.49	3.81
181	SLV 6	1450	38	5651	-47.72	101.49	3.81
181	SLV 7	180	-16	8279	18.38	29.98	-1
181	SLV 8	180	-16	8279	18.38	29.98	-1
181	SLV 9	100	48	4303	-50.97	12.62	3.65
181	SLV 10	100	48	4303	-50.97	12.62	3.65
181	SLV 11	-1171	-6	6932	15.13	-58.89	-1.16
181	SLV 12	-1171	-6	6932	15.13	-58.89	-1.16

Nodo	Cont.	Reazione a traslazione			Reazione a rotazione		
Ind.	N.br.	x	y	z	x	y	z
181	SLV 13	-1920	40	3651	-31.62	-116.09	1.77
181	SLV 14	-1920	40	3651	-31.62	-116.09	1.77
181	SLV 15	-2301	24	4439	-11.79	-137.54	0.33
181	SLV 16	-2301	24	4439	-11.79	-137.54	0.33
182	SLU 1	33	27	5441	-22.87	10.07	0.99
182	SLU 2	101	27	5275	-23.03	12.53	1
182	SLU 3	60	28	5609	-23.85	11.81	1.04
182	SLU 4	101	28	5509	-23.94	13.29	1.04
182	SLU 5	128	28	5391	-23.68	14.15	1.03
182	SLU 6	87	29	5725	-24.49	13.43	1.07
182	SLU 7	128	29	5625	-24.59	14.91	1.07
182	SLU 8	87	28	5673	-24.17	13.31	1.05
182	SLU 9	128	28	5573	-24.26	14.79	1.06
182	SLU 10	138	31	6284	-26.89	15.82	1.17
182	SLU 11	96	32	6618	-27.71	15.11	1.21
182	SLU 12	137	33	6518	-27.81	16.58	1.21
182	SLU 13	164	32	6400	-27.54	17.44	1.2
182	SLU 14	123	33	6734	-28.36	16.73	1.24
182	SLU 15	164	33	6634	-28.45	18.2	1.24
182	SLU 16	123	33	6682	-28.03	16.61	1.22
182	SLU 17	164	33	6582	-28.13	18.08	1.22
182	SLU 18	85	33	6883	-28.39	14.78	1.23
182	SLU 19	126	33	6783	-28.49	16.25	1.24
182	SLU 20	112	34	6999	-29.04	16.4	1.26
182	SLU 21	153	34	6899	-29.13	17.87	1.27
182	SLU 22	61	31	6339	-26.66	12.93	1.16
182	SLU 23	130	31	6172	-26.82	15.39	1.16
182	SLU 24	88	32	6506	-27.63	14.67	1.2
182	SLU 25	129	32	6406	-27.73	16.14	1.21
182	SLU 26	156	32	6288	-27.47	17.01	1.19
182	SLU 27	115	33	6622	-28.28	16.29	1.23
182	SLU 28	156	33	6522	-28.38	17.76	1.24
182	SLU 29	115	33	6570	-27.95	16.17	1.22
182	SLU 30	156	33	6470	-28.05	17.65	1.22
182	SLU 31	166	36	7181	-30.68	18.68	1.33
182	SLU 32	125	37	7515	-31.5	17.96	1.37
182	SLU 33	166	37	7416	-31.59	19.44	1.37
182	SLU 34	193	37	7297	-31.33	20.3	1.36
182	SLU 35	151	38	7631	-32.14	19.58	1.4
182	SLU 36	192	38	7531	-32.24	21.06	1.4
182	SLU 37	151	37	7580	-31.82	19.47	1.39
182	SLU 38	192	37	7480	-31.91	20.94	1.39
182	SLU 39	113	38	7780	-32.18	17.64	1.4
182	SLU 40	154	38	7681	-32.27	19.11	1.4
182	SLU 41	140	39	7896	-32.82	19.26	1.43
182	SLU 42	181	39	7796	-32.92	20.73	1.43
182	SLU 43	33	33	6766	-28.43	12.11	1.24
182	SLU 44	101	33	6600	-28.59	14.57	1.24
182	SLU 45	60	34	6934	-29.41	13.85	1.28
182	SLU 46	101	34	6834	-29.51	15.33	1.28
182	SLU 47	128	34	6716	-29.24	16.19	1.27
182	SLU 48	87	35	7049	-30.06	15.47	1.31
182	SLU 49	128	35	6950	-30.15	16.95	1.31
182	SLU 50	87	35	6998	-29.73	15.36	1.3
182	SLU 51	128	35	6898	-29.83	16.83	1.3
182	SLU 52	138	38	7609	-32.46	17.87	1.41
182	SLU 53	96	39	7943	-33.27	17.15	1.45
182	SLU 54	137	39	7843	-33.37	18.62	1.45
182	SLU 55	165	39	7725	-33.11	19.49	1.44
182	SLU 56	123	40	8059	-33.92	18.77	1.48
182	SLU 57	164	40	7959	-34.02	20.24	1.48
182	SLU 58	123	39	8007	-33.59	18.65	1.46
182	SLU 59	164	39	7907	-33.69	20.12	1.47
182	SLU 60	85	40	8208	-33.95	16.82	1.48
182	SLU 61	126	40	8108	-34.05	18.29	1.48
182	SLU 62	112	41	8324	-34.6	18.44	1.51
182	SLU 63	153	41	8224	-34.7	19.92	1.51
182	SLU 64	61	38	7663	-32.22	14.97	1.4
182	SLU 65	130	38	7497	-32.38	17.43	1.41
182	SLU 66	89	39	7831	-33.2	16.71	1.45
182	SLU 67	130	39	7731	-33.29	18.19	1.45
182	SLU 68	157	39	7613	-33.03	19.05	1.43
182	SLU 69	115	40	7947	-33.84	18.33	1.48
182	SLU 70	156	40	7847	-33.94	19.81	1.48
182	SLU 71	115	39	7895	-33.52	18.21	1.46
182	SLU 72	156	39	7795	-33.61	19.69	1.46
182	SLU 73	166	42	8506	-36.24	20.72	1.57
182	SLU 74	125	43	8840	-37.06	20.01	1.61
182	SLU 75	166	44	8740	-37.16	21.48	1.62
182	SLU 76	193	43	8622	-36.89	22.34	1.6
182	SLU 77	152	44	8956	-37.71	21.63	1.64
182	SLU 78	193	44	8856	-37.8	23.1	1.65
182	SLU 79	151	44	8904	-37.38	21.51	1.63
182	SLU 80	192	44	8804	-37.48	22.98	1.63
182	SLU 81	113	44	9105	-37.74	19.68	1.64
182	SLU 82	154	44	9005	-37.84	21.15	1.64
182	SLU 83	140	45	9221	-38.39	21.3	1.67
182	SLU 84	181	45	9121	-38.48	22.77	1.67
182	SLE RA 1	41	28	5698	-23.95	10.89	1.04
182	SLE RA 2	87	28	5587	-24.06	12.53	1.04

Nodo	Cont.	Reazione a traslazione			Reazione a rotazione		
Ind.	N.br.	x	y	z	x	y	z
182	SLE RA 3	59	29	5809	-24.6	12.05	1.07
182	SLE RA 4	86	29	5743	-24.67	13.03	1.07
182	SLE RA 5	105	29	5664	-24.49	13.61	1.06
182	SLE RA 6	77	29	5887	-25.03	13.13	1.09
182	SLE RA 7	104	29	5820	-25.1	14.11	1.09
182	SLE RA 8	77	29	5852	-24.82	13.05	1.08
182	SLE RA 9	104	29	5786	-24.88	14.03	1.08
182	SLE RA 10	111	31	6260	-26.64	14.72	1.16
182	SLE RA 11	83	32	6482	-27.18	14.24	1.18
182	SLE RA 12	111	32	6416	-27.24	15.23	1.18
182	SLE RA 13	129	32	6337	-27.07	15.8	1.18
182	SLE RA 14	101	32	6559	-27.61	15.32	1.2
182	SLE RA 15	129	32	6493	-27.67	16.31	1.2
182	SLE RA 16	101	32	6525	-27.39	15.25	1.19
182	SLE RA 17	128	32	6458	-27.46	16.23	1.19
182	SLE RA 18	76	32	6659	-27.63	14.03	1.2
182	SLE RA 19	103	32	6592	-27.7	15.01	1.2
182	SLE RA 20	93	33	6736	-28.06	15.11	1.22
182	SLE RA 21	121	33	6670	-28.13	16.09	1.22
182	SLE FR 1	41	28	5698	-23.95	10.89	1.04
182	SLE FR 2	50	28	5676	-23.97	11.22	1.04
182	SLE FR 3	48	28	5729	-24.12	11.32	1.05
182	SLE FR 4	60	29	5964	-25.08	12.16	1.09
182	SLE FR 5	59	30	6017	-25.23	12.26	1.1
182	SLE FR 6	58	30	6178	-25.79	12.46	1.12
182	SLE QP 1	41	28	5698	-23.95	10.89	1.04
182	SLE QP 2	51	29	5986	-25.06	11.83	1.09
182	SLD 1	1182	39	6418	-33.62	70.75	1.42
182	SLD 2	1182	39	6418	-33.62	70.75	1.42
182	SLD 3	1049	28	6681	-21.42	65.35	0.93
182	SLD 4	1049	28	6681	-21.42	65.35	0.93
182	SLD 5	592	49	5716	-46.14	37.69	1.93
182	SLD 6	592	49	5716	-46.14	37.69	1.93
182	SLD 7	149	12	6594	-5.45	19.7	0.3
182	SLD 8	149	12	6594	-5.45	19.7	0.3
182	SLD 9	-46	47	5378	-44.66	3.96	1.88
182	SLD 10	-46	47	5378	-44.66	3.96	1.88
182	SLD 11	-489	10	6256	-3.97	-14.03	0.25
182	SLD 12	-489	10	6256	-3.97	-14.03	0.25
182	SLD 13	-946	31	5291	-28.7	-41.69	1.25
182	SLD 14	-946	31	5291	-28.7	-41.69	1.25
182	SLD 15	-1079	20	5554	-16.49	-47.09	0.76
182	SLD 16	-1079	20	5554	-16.49	-47.09	0.76
182	SLV 1	2698	52	6985	-45.18	149.78	1.87
182	SLV 2	2698	52	6985	-45.18	149.78	1.87
182	SLV 3	2382	26	7629	-16.55	136.93	0.72
182	SLV 4	2382	26	7629	-16.55	136.93	0.72
182	SLV 5	1324	76	5308	-74.51	72.7	3.06
182	SLV 6	1324	76	5308	-74.51	72.7	3.06
182	SLV 7	272	-11	7457	20.91	29.88	-0.76
182	SLV 8	272	-11	7457	20.91	29.88	-0.76
182	SLV 9	-169	70	4516	-71.03	-6.22	2.94
182	SLV 10	-169	70	4516	-71.03	-6.22	2.94
182	SLV 11	-1221	-17	6664	24.4	-49.04	-0.88
182	SLV 12	-1221	-17	6664	24.4	-49.04	-0.88
182	SLV 13	-2280	33	4343	-33.56	-113.27	1.46
182	SLV 14	-2280	33	4343	-33.56	-113.27	1.46
182	SLV 15	-2595	7	4987	-4.93	-126.11	0.31
182	SLV 16	-2595	7	4987	-4.93	-126.11	0.31
183	SLU 1	52	36	5150	-31.66	4.53	0.34
183	SLU 2	112	36	5029	-31.67	6.91	0.34
183	SLU 3	83	37	5297	-33.03	5.99	0.36
183	SLU 4	119	37	5224	-33.03	7.41	0.36
183	SLU 5	142	37	5129	-32.58	8.28	0.35
183	SLU 6	113	38	5396	-33.94	7.37	0.37
183	SLU 7	149	38	5324	-33.94	8.79	0.37
183	SLU 8	112	38	5349	-33.48	7.29	0.36
183	SLU 9	148	38	5277	-33.49	8.72	0.36
183	SLU 10	149	42	5996	-37	8.86	0.4
183	SLU 11	119	43	6263	-38.36	7.95	0.42
183	SLU 12	155	43	6191	-38.36	9.37	0.42
183	SLU 13	178	43	6095	-37.91	10.24	0.41
183	SLU 14	149	44	6363	-39.27	9.33	0.43
183	SLU 15	185	44	6290	-39.27	10.75	0.43
183	SLU 16	148	44	6315	-38.81	9.25	0.42
183	SLU 17	184	44	6243	-38.82	10.67	0.42
183	SLU 18	104	45	6531	-39.27	7.33	0.43
183	SLU 19	140	44	6458	-39.28	8.76	0.43
183	SLU 20	134	46	6630	-40.19	8.71	0.44
183	SLU 21	170	45	6558	-40.19	10.13	0.44
183	SLU 22	83	42	6000	-36.9	6.27	0.4
183	SLU 23	143	42	5879	-36.91	8.64	0.4
183	SLU 24	114	43	6147	-38.27	7.73	0.41
183	SLU 25	150	43	6074	-38.28	9.15	0.41
183	SLU 26	173	43	5979	-37.82	10.02	0.41
183	SLU 27	144	44	6246	-39.18	9.1	0.42
183	SLU 28	180	44	6174	-39.19	10.53	0.42
183	SLU 29	143	44	6199	-38.73	9.03	0.42
183	SLU 30	179	44	6127	-38.73	10.45	0.42
183	SLU 31	180	48	6846	-42.24	10.6	0.46

Nodo	Cont.	Reazione a traslazione			Reazione a rotazione		
Ind.	N.br.	x	y	z	x	y	z
183	SLU 32	150	49	7113	-43.6	9.68	0.47
183	SLU 33	187	49	7041	-43.61	11.11	0.47
183	SLU 34	209	49	6945	-43.15	11.98	0.47
183	SLU 35	180	50	7213	-44.51	11.06	0.48
183	SLU 36	216	50	7140	-44.52	12.49	0.48
183	SLU 37	179	50	7165	-44.06	10.98	0.48
183	SLU 38	215	50	7093	-44.06	12.41	0.48
183	SLU 39	135	50	7381	-44.52	9.07	0.48
183	SLU 40	171	50	7308	-44.52	10.49	0.48
183	SLU 41	165	52	7480	-45.43	10.45	0.49
183	SLU 42	201	51	7408	-45.43	11.87	0.49
183	SLU 43	57	45	6403	-39.36	5.3	0.43
183	SLU 44	117	44	6283	-39.37	7.67	0.43
183	SLU 45	88	46	6550	-40.73	6.76	0.44
183	SLU 46	124	46	6478	-40.73	8.18	0.44
183	SLU 47	147	45	6383	-40.28	9.05	0.44
183	SLU 48	118	47	6650	-41.64	8.14	0.45
183	SLU 49	154	47	6577	-41.64	9.56	0.45
183	SLU 50	117	47	6603	-41.18	8.06	0.45
183	SLU 51	153	47	6530	-41.19	9.48	0.45
183	SLU 52	154	51	7250	-44.7	9.63	0.48
183	SLU 53	124	52	7517	-46.06	8.72	0.5
183	SLU 54	160	52	7444	-46.06	10.14	0.5
183	SLU 55	183	52	7349	-45.61	11.01	0.49
183	SLU 56	154	53	7616	-46.97	10.1	0.51
183	SLU 57	190	53	7544	-46.97	11.52	0.51
183	SLU 58	153	53	7569	-46.51	10.02	0.5
183	SLU 59	189	53	7497	-46.52	11.44	0.5
183	SLU 60	109	53	7784	-46.97	8.1	0.51
183	SLU 61	145	53	7712	-46.98	9.52	0.51
183	SLU 62	139	54	7884	-47.89	9.48	0.52
183	SLU 63	175	54	7811	-47.89	10.9	0.52
183	SLU 64	88	51	7253	-44.6	7.03	0.48
183	SLU 65	148	50	7133	-44.61	9.41	0.48
183	SLU 66	119	52	7400	-45.97	8.49	0.5
183	SLU 67	155	52	7328	-45.98	9.91	0.5
183	SLU 68	178	51	7232	-45.52	10.78	0.49
183	SLU 69	149	53	7500	-46.88	9.87	0.51
183	SLU 70	185	53	7427	-46.89	11.29	0.51
183	SLU 71	148	53	7452	-46.43	9.79	0.5
183	SLU 72	184	52	7380	-46.43	11.22	0.5
183	SLU 73	185	56	8099	-49.94	11.36	0.54
183	SLU 74	155	58	8367	-51.3	10.45	0.56
183	SLU 75	192	58	8294	-51.31	11.87	0.56
183	SLU 76	214	58	8199	-50.85	12.74	0.55
183	SLU 77	185	59	8466	-52.21	11.83	0.57
183	SLU 78	221	59	8394	-52.22	13.25	0.57
183	SLU 79	184	59	8419	-51.76	11.75	0.56
183	SLU 80	220	59	8347	-51.76	13.17	0.56
183	SLU 81	140	59	8634	-52.22	9.83	0.57
183	SLU 82	176	59	8562	-52.22	11.25	0.57
183	SLU 83	170	60	8734	-53.13	11.21	0.58
183	SLU 84	206	60	8661	-53.13	12.63	0.58
183	SLE RA 1	61	38	5393	-33.16	5.03	0.36
183	SLE RA 2	101	37	5312	-33.16	6.61	0.36
183	SLE RA 3	82	39	5491	-34.07	6	0.37
183	SLE RA 4	106	39	5442	-34.07	6.95	0.37
183	SLE RA 5	121	38	5379	-33.77	7.53	0.37
183	SLE RA 6	101	39	5557	-34.68	6.92	0.38
183	SLE RA 7	126	39	5509	-34.68	7.87	0.38
183	SLE RA 8	101	39	5525	-34.37	6.87	0.37
183	SLE RA 9	125	39	5477	-34.38	7.82	0.37
183	SLE RA 10	125	42	5957	-36.72	7.92	0.4
183	SLE RA 11	106	43	6135	-37.62	7.31	0.41
183	SLE RA 12	130	43	6087	-37.63	8.26	0.41
183	SLE RA 13	145	42	6023	-37.32	8.84	0.4
183	SLE RA 14	126	43	6201	-38.23	8.23	0.41
183	SLE RA 15	150	43	6153	-38.23	9.18	0.41
183	SLE RA 16	125	43	6170	-37.93	8.17	0.41
183	SLE RA 17	149	43	6122	-37.93	9.12	0.41
183	SLE RA 18	96	43	6313	-38.23	6.9	0.41
183	SLE RA 19	120	43	6265	-38.24	7.84	0.41
183	SLE RA 20	115	44	6380	-38.84	7.81	0.42
183	SLE RA 21	140	44	6331	-38.84	8.76	0.42
183	SLE FR 1	61	38	5393	-33.16	5.03	0.36
183	SLE FR 2	69	38	5377	-33.16	5.35	0.36
183	SLE FR 3	69	38	5419	-33.4	5.4	0.36
183	SLE FR 4	79	39	5653	-34.68	5.91	0.38
183	SLE FR 5	79	40	5695	-34.92	5.96	0.38
183	SLE FR 6	78	40	5853	-35.7	5.96	0.39
183	SLE QP 1	61	38	5393	-33.16	5.03	0.36
183	SLE QP 2	71	39	5669	-34.68	5.59	0.38
183	SLD 1	1240	51	5790	-46.02	57.49	0.5
183	SLD 2	1240	51	5790	-46.02	57.49	0.5
183	SLD 3	1124	34	6054	-29.13	52.87	0.31
183	SLD 4	1124	34	6054	-29.13	52.87	0.31
183	SLD 5	597	68	5306	-63.7	28.17	0.7
183	SLD 6	597	68	5306	-63.7	28.17	0.7
183	SLD 7	213	13	6184	-7.4	12.76	0.07
183	SLD 8	213	13	6184	-7.4	12.76	0.07

Nodo	Cont.	Reazione a traslazione			Reazione a rotazione		
Ind.	N.br.	x	y	z	x	y	z
183	SLD 9	-70	66	5154	-61.96	-1.58	0.68
183	SLD 10	-70	66	5154	-61.96	-1.58	0.68
183	SLD 11	-454	11	6032	-5.66	-17	0.06
183	SLD 12	-454	11	6032	-5.66	-17	0.06
183	SLD 13	-982	44	5284	-40.23	-41.69	0.44
183	SLD 14	-982	44	5284	-40.23	-41.69	0.44
183	SLD 15	-1097	28	5548	-23.34	-46.32	0.25
183	SLD 16	-1097	28	5548	-23.34	-46.32	0.25
183	SLV 1	2807	66	5944	-61.3	127.12	0.67
183	SLV 2	2807	66	5944	-61.3	127.12	0.67
183	SLV 3	2533	28	6581	-21.71	116.11	0.23
183	SLV 4	2533	28	6581	-21.71	116.11	0.23
183	SLV 5	1308	106	4786	-102.72	58.74	1.13
183	SLV 6	1308	106	4786	-102.72	58.74	1.13
183	SLV 7	394	-22	6908	29.26	22.05	-0.33
183	SLV 8	394	-22	6908	29.26	22.05	-0.33
183	SLV 9	-251	101	4430	-98.62	-10.88	1.08
183	SLV 10	-251	101	4430	-98.62	-10.88	1.08
183	SLV 11	-1165	-27	6552	33.35	-47.56	-0.37
183	SLV 12	-1165	-27	6552	33.35	-47.56	-0.37
183	SLV 13	-2390	51	4757	-47.65	-104.94	0.52
183	SLV 14	-2390	51	4757	-47.65	-104.94	0.52
183	SLV 15	-2664	13	5393	-8.06	-115.94	0.08
183	SLV 16	-2664	13	5393	-8.06	-115.94	0.08
184	SLU 1	62	51	4987	-40.16	4.61	-2.27
184	SLU 2	121	51	4898	-40.04	7.13	-2.25
184	SLU 3	92	53	5119	-41.92	6.35	-2.37
184	SLU 4	128	53	5066	-41.85	7.86	-2.36
184	SLU 5	150	52	4986	-41.22	8.76	-2.32
184	SLU 6	121	55	5207	-43.1	7.98	-2.43
184	SLU 7	157	54	5154	-43.03	9.49	-2.43
184	SLU 8	120	54	5163	-42.51	7.87	-2.4
184	SLU 9	155	54	5110	-42.44	9.38	-2.39
184	SLU 10	159	59	5842	-46.78	9.02	-2.63
184	SLU 11	131	62	6063	-48.66	8.25	-2.75
184	SLU 12	166	62	6010	-48.59	9.76	-2.74
184	SLU 13	188	61	5930	-47.96	10.65	-2.7
184	SLU 14	160	63	6151	-49.84	9.88	-2.82
184	SLU 15	195	63	6098	-49.77	11.39	-2.81
184	SLU 16	159	62	6106	-49.25	9.76	-2.78
184	SLU 17	194	62	6053	-49.18	11.27	-2.77
184	SLU 18	117	63	6334	-49.79	7.32	-2.81
184	SLU 19	152	63	6281	-49.72	8.83	-2.8
184	SLU 20	146	65	6422	-50.97	8.95	-2.88
184	SLU 21	181	64	6369	-50.9	10.46	-2.87
184	SLU 22	95	59	5809	-46.82	6.39	-2.64
184	SLU 23	154	59	5721	-46.7	8.91	-2.63
184	SLU 24	125	62	5942	-48.58	8.14	-2.74
184	SLU 25	161	61	5889	-48.51	9.65	-2.74
184	SLU 26	183	61	5809	-47.88	10.54	-2.7
184	SLU 27	155	63	6030	-49.76	9.77	-2.81
184	SLU 28	190	63	5977	-49.69	11.28	-2.8
184	SLU 29	153	62	5985	-49.17	9.65	-2.78
184	SLU 30	188	62	5932	-49.1	11.16	-2.77
184	SLU 31	192	68	6664	-53.44	10.81	-3.01
184	SLU 32	164	70	6885	-55.32	10.03	-3.13
184	SLU 33	199	70	6832	-55.25	11.55	-3.12
184	SLU 34	221	69	6752	-54.62	12.44	-3.08
184	SLU 35	193	72	6973	-56.5	11.66	-3.19
184	SLU 36	229	71	6920	-56.42	13.17	-3.18
184	SLU 37	192	71	6928	-55.91	11.55	-3.16
184	SLU 38	227	71	6876	-55.84	13.06	-3.15
184	SLU 39	150	72	7157	-56.45	9.1	-3.19
184	SLU 40	185	71	7104	-56.38	10.61	-3.18
184	SLU 41	179	73	7245	-57.63	10.73	-3.25
184	SLU 42	214	73	7192	-57.55	12.24	-3.25
184	SLU 43	69	63	6201	-49.93	5.38	-2.82
184	SLU 44	128	63	6112	-49.81	7.9	-2.8
184	SLU 45	99	65	6333	-51.69	7.13	-2.92
184	SLU 46	135	65	6280	-51.62	8.64	-2.91
184	SLU 47	157	64	6200	-50.99	9.53	-2.87
184	SLU 48	129	67	6421	-52.86	8.75	-2.99
184	SLU 49	164	67	6368	-52.79	10.26	-2.98
184	SLU 50	127	66	6377	-52.28	8.64	-2.95
184	SLU 51	162	66	6324	-52.21	10.15	-2.94
184	SLU 52	166	72	7056	-56.55	9.8	-3.18
184	SLU 53	138	74	7277	-58.43	9.02	-3.3
184	SLU 54	173	74	7224	-58.36	10.53	-3.29
184	SLU 55	195	73	7144	-57.73	11.42	-3.25
184	SLU 56	167	76	7365	-59.6	10.65	-3.37
184	SLU 57	203	75	7312	-59.53	12.16	-3.36
184	SLU 58	166	75	7320	-59.02	10.54	-3.33
184	SLU 59	201	75	7267	-58.95	12.05	-3.32
184	SLU 60	124	76	7548	-59.56	8.09	-3.36
184	SLU 61	159	75	7495	-59.49	9.6	-3.35
184	SLU 62	153	77	7636	-60.73	9.72	-3.43
184	SLU 63	188	77	7583	-60.66	11.23	-3.42
184	SLU 64	102	72	7023	-56.59	7.16	-3.19
184	SLU 65	161	71	6935	-56.47	9.68	-3.18
184	SLU 66	133	74	7156	-58.35	8.91	-3.3

Nodo	Cont.	Reazione a traslazione			Reazione a rotazione		
Ind.	N.br.	x	y	z	x	y	z
184	SLU 67	168	74	7103	-58.28	10.42	-3.29
184	SLU 68	190	73	7023	-57.64	11.31	-3.25
184	SLU 69	162	75	7244	-59.52	10.54	-3.36
184	SLU 70	197	75	7191	-59.45	12.05	-3.35
184	SLU 71	160	75	7199	-58.94	10.42	-3.33
184	SLU 72	196	74	7146	-58.87	11.93	-3.32
184	SLU 73	199	80	7878	-63.21	11.58	-3.56
184	SLU 74	171	82	8099	-65.09	10.81	-3.68
184	SLU 75	207	82	8046	-65.02	12.32	-3.67
184	SLU 76	229	81	7966	-64.38	13.21	-3.63
184	SLU 77	200	84	8187	-66.26	12.43	-3.74
184	SLU 78	236	84	8134	-66.19	13.95	-3.74
184	SLU 79	199	83	8142	-65.68	12.32	-3.71
184	SLU 80	234	83	8090	-65.61	13.83	-3.7
184	SLU 81	157	84	8371	-66.22	9.87	-3.74
184	SLU 82	192	84	8318	-66.15	11.39	-3.73
184	SLU 83	186	85	8459	-67.39	11.5	-3.81
184	SLU 84	222	85	8406	-67.32	13.01	-3.8
184	SLE RA 1	71	53	5222	-42.07	5.12	-2.37
184	SLE RA 2	110	53	5163	-41.99	6.8	-2.37
184	SLE RA 3	92	55	5310	-43.24	6.28	-2.44
184	SLE RA 4	115	55	5275	-43.19	7.29	-2.44
184	SLE RA 5	130	54	5221	-42.77	7.88	-2.41
184	SLE RA 6	111	56	5369	-44.02	7.37	-2.49
184	SLE RA 7	135	56	5333	-43.97	8.37	-2.48
184	SLE RA 8	110	55	5339	-43.63	7.29	-2.46
184	SLE RA 9	134	55	5304	-43.59	8.3	-2.46
184	SLE RA 10	136	59	5792	-46.48	8.06	-2.62
184	SLE RA 11	117	60	5939	-47.73	7.55	-2.7
184	SLE RA 12	141	60	5904	-47.68	8.55	-2.69
184	SLE RA 13	156	60	5850	-47.26	9.15	-2.66
184	SLE RA 14	137	61	5998	-48.52	8.63	-2.74
184	SLE RA 15	160	61	5962	-48.47	9.64	-2.73
184	SLE RA 16	136	61	5968	-48.13	8.56	-2.72
184	SLE RA 17	159	61	5933	-48.08	9.56	-2.71
184	SLE RA 18	108	61	6120	-48.49	6.93	-2.74
184	SLE RA 19	131	61	6085	-48.44	7.93	-2.73
184	SLE RA 20	127	62	6179	-49.27	8.01	-2.78
184	SLE RA 21	151	62	6143	-49.22	9.02	-2.78
184	SLE FR 1	71	53	5222	-42.07	5.12	-2.37
184	SLE FR 2	79	53	5210	-42.05	5.45	-2.37
184	SLE FR 3	79	54	5245	-42.38	5.55	-2.39
184	SLE FR 4	90	56	5479	-43.98	6	-2.48
184	SLE FR 5	90	56	5515	-44.31	6.1	-2.5
184	SLE FR 6	89	57	5671	-45.28	6.02	-2.56
184	SLE QP 1	71	53	5222	-42.07	5.12	-2.37
184	SLE QP 2	82	56	5491	-43.99	5.66	-2.48
184	SLD 1	1197	71	5175	-58.28	60.18	-3.09
184	SLD 2	1197	71	5175	-58.28	60.18	-3.09
184	SLD 3	1086	48	5470	-37.26	64.82	-2.28
184	SLD 4	1086	48	5470	-37.26	64.82	-2.28
184	SLD 5	585	96	4949	-80.16	14.98	-3.89
184	SLD 6	585	96	4949	-80.16	14.98	-3.89
184	SLD 7	215	18	5932	-10.09	30.44	-1.2
184	SLD 8	215	18	5932	-10.09	30.44	-1.2
184	SLD 9	-51	93	5050	-77.9	-19.12	-3.77
184	SLD 10	-51	93	5050	-77.9	-19.12	-3.77
184	SLD 11	-421	16	6034	-7.82	-3.66	-1.07
184	SLD 12	-421	16	6034	-7.82	-3.66	-1.07
184	SLD 13	-922	63	5513	-50.73	-53.5	-2.69
184	SLD 14	-922	63	5513	-50.73	-53.5	-2.69
184	SLD 15	-1033	40	5808	-29.7	-48.86	-1.88
184	SLD 16	-1033	40	5808	-29.7	-48.86	-1.88
184	SLV 1	2693	93	4742	-77.51	133.11	-3.91
184	SLV 2	2693	93	4742	-77.51	133.11	-3.91
184	SLV 3	2429	38	5446	-28.24	144.17	-2.01
184	SLV 4	2429	38	5446	-28.24	144.17	-2.01
184	SLV 5	1265	149	4198	-128.77	27.12	-5.78
184	SLV 6	1265	149	4198	-128.77	27.12	-5.78
184	SLV 7	386	-32	6546	35.45	63.99	0.53
184	SLV 8	386	-32	6546	35.45	63.99	0.53
184	SLV 9	-222	143	4436	-123.44	-52.66	-5.5
184	SLV 10	-222	143	4436	-123.44	-52.66	-5.5
184	SLV 11	-1101	-38	6784	40.78	-15.8	0.82
184	SLV 12	-1101	-38	6784	40.78	-15.8	0.82
184	SLV 13	-2265	73	5536	-59.74	-132.85	-2.96
184	SLV 14	-2265	73	5536	-59.74	-132.85	-2.96
184	SLV 15	-2529	19	6240	-10.48	-121.79	-1.06
184	SLV 16	-2529	19	6240	-10.48	-121.79	-1.06
185	SLU 1	8	54	4867	-44.23	-1.65	1.86
185	SLU 2	55	54	4808	-44.05	0.91	1.85
185	SLU 3	37	56	4983	-46.19	0.08	1.94
185	SLU 4	66	56	4948	-46.08	1.61	1.94
185	SLU 5	83	55	4882	-45.36	2.56	1.9
185	SLU 6	65	58	5057	-47.49	1.72	2
185	SLU 7	93	58	5022	-47.38	3.26	1.99
185	SLU 8	63	57	5014	-46.85	1.64	1.97
185	SLU 9	91	57	4979	-46.74	3.18	1.96
185	SLU 10	73	63	5737	-51.46	1.6	2.16
185	SLU 11	55	66	5912	-53.59	0.76	2.25

Nodo	Cont.	Reazione a traslazione			Reazione a rotazione		
Ind.	N.br.	x	y	z	x	y	z
185	SLU 12	84	65	5877	-53.48	2.3	2.25
185	SLU 13	101	64	5810	-52.76	3.25	2.22
185	SLU 14	83	67	5985	-54.9	2.41	2.31
185	SLU 15	111	67	5950	-54.79	3.95	2.3
185	SLU 16	81	66	5943	-54.25	2.33	2.28
185	SLU 17	109	66	5907	-54.14	3.87	2.28
185	SLU 18	33	67	6193	-54.82	-0.67	2.3
185	SLU 19	62	67	6158	-54.7	0.87	2.3
185	SLU 20	61	69	6267	-56.12	0.98	2.36
185	SLU 21	89	69	6232	-56.01	2.52	2.35
185	SLU 22	26	63	5669	-51.57	-0.85	2.17
185	SLU 23	74	63	5610	-51.39	1.71	2.16
185	SLU 24	56	65	5785	-53.53	0.87	2.25
185	SLU 25	85	65	5750	-53.42	2.41	2.25
185	SLU 26	102	64	5684	-52.7	3.35	2.21
185	SLU 27	83	67	5859	-54.83	2.52	2.31
185	SLU 28	112	67	5824	-54.72	4.05	2.3
185	SLU 29	81	66	5816	-54.19	2.44	2.28
185	SLU 30	110	66	5781	-54.08	3.97	2.27
185	SLU 31	92	72	6539	-58.8	2.4	2.47
185	SLU 32	74	75	6714	-60.93	1.56	2.56
185	SLU 33	103	74	6679	-60.82	3.1	2.56
185	SLU 34	120	73	6613	-60.1	4.04	2.53
185	SLU 35	101	76	6787	-62.24	3.2	2.62
185	SLU 36	130	76	6752	-62.13	4.74	2.61
185	SLU 37	99	75	6745	-61.59	3.13	2.59
185	SLU 38	128	75	6710	-61.48	4.66	2.59
185	SLU 39	52	76	6995	-62.15	0.13	2.61
185	SLU 40	81	76	6960	-62.04	1.67	2.61
185	SLU 41	79	78	7069	-63.46	1.78	2.67
185	SLU 42	108	77	7034	-63.35	3.31	2.66
185	SLU 43	3	67	6052	-54.99	-2.42	2.31
185	SLU 44	51	67	5993	-54.8	0.15	2.3
185	SLU 45	33	70	6168	-56.94	-0.69	2.39
185	SLU 46	62	69	6133	-56.83	0.85	2.39
185	SLU 47	79	68	6067	-56.11	1.79	2.36
185	SLU 48	60	71	6242	-58.25	0.95	2.45
185	SLU 49	89	71	6207	-58.14	2.49	2.44
185	SLU 50	58	70	6199	-57.6	0.88	2.42
185	SLU 51	87	70	6164	-57.49	2.41	2.42
185	SLU 52	69	76	6922	-62.21	0.83	2.61
185	SLU 53	51	79	7097	-64.35	0	2.71
185	SLU 54	80	79	7062	-64.24	1.53	2.7
185	SLU 55	97	78	6995	-63.52	2.48	2.67
185	SLU 56	78	80	7170	-65.65	1.64	2.76
185	SLU 57	107	80	7135	-65.54	3.18	2.75
185	SLU 58	76	80	7127	-65.01	1.56	2.73
185	SLU 59	105	79	7092	-64.9	3.1	2.73
185	SLU 60	29	80	7378	-65.57	-1.43	2.76
185	SLU 61	58	80	7343	-65.46	0.1	2.75
185	SLU 62	56	82	7452	-66.88	0.21	2.81
185	SLU 63	85	82	7417	-66.77	1.75	2.8
185	SLU 64	22	76	6854	-62.33	-1.62	2.62
185	SLU 65	70	76	6795	-62.14	0.94	2.61
185	SLU 66	52	79	6970	-64.28	0.1	2.7
185	SLU 67	80	78	6935	-64.17	1.64	2.7
185	SLU 68	98	77	6869	-63.45	2.59	2.67
185	SLU 69	79	80	7044	-65.59	1.75	2.76
185	SLU 70	108	80	7009	-65.48	3.29	2.75
185	SLU 71	77	79	7001	-64.94	1.67	2.73
185	SLU 72	106	79	6966	-64.83	3.21	2.73
185	SLU 73	88	85	7724	-69.55	1.63	2.92
185	SLU 74	70	88	7899	-71.69	0.79	3.02
185	SLU 75	98	88	7864	-71.58	2.33	3.01
185	SLU 76	116	87	7798	-70.86	3.27	2.98
185	SLU 77	97	89	7972	-72.99	2.44	3.07
185	SLU 78	126	89	7937	-72.88	3.97	3.06
185	SLU 79	95	89	7930	-72.35	2.36	3.04
185	SLU 80	124	88	7895	-72.24	3.89	3.04
185	SLU 81	48	89	8180	-72.91	-0.64	3.07
185	SLU 82	76	89	8145	-72.8	0.9	3.06
185	SLU 83	75	91	8254	-74.21	1.01	3.12
185	SLU 84	104	91	8219	-74.1	2.54	3.11
185	SLE RA 1	13	57	5096	-46.33	-1.42	1.95
185	SLE RA 2	45	56	5057	-46.21	0.29	1.94
185	SLE RA 3	33	58	5173	-47.63	-0.27	2
185	SLE RA 4	52	58	5150	-47.56	0.75	2
185	SLE RA 5	63	57	5106	-47.08	1.38	1.98
185	SLE RA 6	51	59	5223	-48.5	0.83	2.04
185	SLE RA 7	70	59	5199	-48.43	1.85	2.04
185	SLE RA 8	50	59	5194	-48.07	0.77	2.02
185	SLE RA 9	69	59	5171	-48	1.8	2.02
185	SLE RA 10	57	63	5676	-51.15	0.74	2.15
185	SLE RA 11	45	64	5793	-52.57	0.19	2.21
185	SLE RA 12	64	64	5769	-52.5	1.21	2.21
185	SLE RA 13	75	64	5725	-52.02	1.84	2.19
185	SLE RA 14	63	65	5842	-53.44	1.28	2.25
185	SLE RA 15	82	65	5818	-53.37	2.31	2.24
185	SLE RA 16	62	65	5813	-53.01	1.23	2.23
185	SLE RA 17	81	65	5790	-52.94	2.26	2.23

Nodo	Cont.	Reazione a traslazione			Reazione a rotazione		
Ind.	N.br.	x	y	z	x	y	z
185	SLE RA 18	30	65	5980	-53.38	-0.77	2.24
185	SLE RA 19	49	65	5957	-53.31	0.26	2.24
185	SLE RA 20	48	66	6029	-54.26	0.33	2.28
185	SLE RA 21	68	66	6006	-54.18	1.36	2.28
185	SLE FR 1	13	57	5096	-46.33	-1.42	1.95
185	SLE FR 2	19	57	5088	-46.31	-1.08	1.95
185	SLE FR 3	20	57	5115	-46.68	-0.98	1.96
185	SLE FR 4	24	59	5353	-48.42	-0.88	2.04
185	SLE FR 5	25	60	5381	-48.8	-0.79	2.05
185	SLE FR 6	21	61	5538	-49.86	-1.09	2.1
185	SLE QP 1	13	57	5096	-46.33	-1.42	1.95
185	SLE QP 2	18	59	5361	-48.45	-1.22	2.04
185	SLD 1	944	77	4955	-64.05	57.27	2.5
185	SLD 2	944	77	4955	-64.05	57.27	2.5
185	SLD 3	1018	52	4634	-41.63	61.79	1.93
185	SLD 4	1018	52	4634	-41.63	61.79	1.93
185	SLD 5	183	102	5726	-87.14	9.47	3.05
185	SLD 6	183	102	5726	-87.14	9.47	3.05
185	SLD 7	431	19	4656	-12.39	24.54	1.13
185	SLD 8	431	19	4656	-12.39	24.54	1.13
185	SLD 9	-395	99	6066	-84.5	-26.99	2.94
185	SLD 10	-395	99	6066	-84.5	-26.99	2.94
185	SLD 11	-147	16	4996	-9.76	-11.92	1.03
185	SLD 12	-147	16	4996	-9.76	-11.92	1.03
185	SLD 13	-982	67	6089	-55.27	-64.24	2.14
185	SLD 14	-982	67	6089	-55.27	-64.24	2.14
185	SLD 15	-908	42	5767	-32.84	-59.72	1.57
185	SLD 16	-908	42	5767	-32.84	-59.72	1.57
185	SLV 1	2182	100	4415	-85.04	135.53	3.13
185	SLV 2	2182	100	4415	-85.04	135.53	3.13
185	SLV 3	2360	41	3653	-32.49	146.32	1.79
185	SLV 4	2360	41	3653	-32.49	146.32	1.79
185	SLV 5	397	160	6233	-139.12	23.44	4.4
185	SLV 6	397	160	6233	-139.12	23.44	4.4
185	SLV 7	991	-35	3693	36.03	59.4	-0.08
185	SLV 8	991	-35	3693	36.03	59.4	-0.08
185	SLV 9	-955	153	7029	-132.93	-61.85	4.15
185	SLV 10	-955	153	7029	-132.93	-61.85	4.15
185	SLV 11	-361	-42	4489	42.23	-25.89	-0.33
185	SLV 12	-361	-42	4489	42.23	-25.89	-0.33
185	SLV 13	-2324	77	7069	-64.4	-148.77	2.29
185	SLV 14	-2324	77	7069	-64.4	-148.77	2.29
185	SLV 15	-2146	19	6307	-11.85	-137.98	0.94
185	SLV 16	-2146	19	6307	-11.85	-137.98	0.94
186	SLU 1	-48	56	4758	-47.62	-2.58	0.38
186	SLU 2	-10	56	4714	-47.36	-0.87	0.37
186	SLU 3	-25	59	4860	-49.74	-1.3	0.4
186	SLU 4	-2	58	4833	-49.58	-0.28	0.4
186	SLU 5	12	57	4774	-48.78	0.35	0.39
186	SLU 6	-3	60	4920	-51.16	-0.09	0.41
186	SLU 7	20	60	4894	-51.01	0.94	0.41
186	SLU 8	-4	59	4878	-50.46	-0.15	0.41
186	SLU 9	19	59	4852	-50.31	0.88	0.4
186	SLU 10	-7	65	5627	-55.3	-0.72	0.43
186	SLU 11	-22	68	5773	-57.68	-1.15	0.46
186	SLU 12	1	68	5746	-57.53	-0.12	0.45
186	SLU 13	15	67	5687	-56.73	0.5	0.44
186	SLU 14	0	70	5833	-59.11	0.07	0.47
186	SLU 15	23	69	5807	-58.95	1.1	0.47
186	SLU 16	-1	69	5791	-58.41	0.01	0.47
186	SLU 17	22	69	5765	-58.25	1.04	0.46
186	SLU 18	-44	70	6062	-58.96	-2.36	0.46
186	SLU 19	-21	69	6036	-58.81	-1.33	0.46
186	SLU 20	-22	71	6122	-60.39	-1.14	0.48
186	SLU 21	1	71	6096	-60.23	-0.12	0.47
186	SLU 22	-42	65	5542	-55.52	-2.24	0.44
186	SLU 23	-4	65	5498	-55.26	-0.53	0.44
186	SLU 24	-19	68	5643	-57.65	-0.96	0.46
186	SLU 25	4	68	5617	-57.49	0.07	0.46
186	SLU 26	18	67	5558	-56.69	0.69	0.45
186	SLU 27	3	70	5704	-59.07	0.26	0.48
186	SLU 28	26	69	5677	-58.92	1.29	0.47
186	SLU 29	2	69	5662	-58.37	0.19	0.47
186	SLU 30	25	69	5636	-58.21	1.22	0.47
186	SLU 31	0	75	6410	-63.21	-0.37	0.5
186	SLU 32	-16	77	6556	-65.59	-0.81	0.52
186	SLU 33	8	77	6530	-65.44	0.22	0.52
186	SLU 34	22	76	6471	-64.63	0.85	0.51
186	SLU 35	6	79	6616	-67.02	0.41	0.54
186	SLU 36	30	79	6590	-66.86	1.44	0.53
186	SLU 37	5	78	6575	-66.31	0.35	0.53
186	SLU 38	28	78	6548	-66.16	1.38	0.53
186	SLU 39	-38	79	6846	-66.87	-2.02	0.53
186	SLU 40	-14	79	6819	-66.72	-0.99	0.52
186	SLU 41	-16	81	6906	-68.3	-0.8	0.54
186	SLU 42	8	80	6879	-68.14	0.23	0.54
186	SLU 43	-65	70	5917	-59.19	-3.48	0.47
186	SLU 44	-26	69	5873	-58.93	-1.76	0.46
186	SLU 45	-42	72	6019	-61.31	-2.2	0.49
186	SLU 46	-19	72	5992	-61.16	-1.17	0.49

Nodo	Cont.	Reazione a traslazione			Reazione a rotazione		
Ind.	N.br.	x	y	z	x	y	z
186	SLU 47	-4	71	5933	-60.35	-0.54	0.48
186	SLU 48	-20	74	6079	-62.74	-0.98	0.51
186	SLU 49	3	74	6053	-62.58	0.05	0.5
186	SLU 50	-21	73	6037	-62.04	-1.04	0.5
186	SLU 51	2	73	6011	-61.88	-0.01	0.49
186	SLU 52	-23	79	6786	-66.87	-1.61	0.52
186	SLU 53	-38	82	6932	-69.26	-2.04	0.55
186	SLU 54	-15	81	6905	-69.1	-1.01	0.55
186	SLU 55	-1	81	6846	-68.3	-0.39	0.54
186	SLU 56	-17	83	6992	-70.68	-0.82	0.56
186	SLU 57	7	83	6965	-70.53	0.21	0.56
186	SLU 58	-18	83	6950	-69.98	-0.88	0.56
186	SLU 59	5	82	6924	-69.83	0.14	0.55
186	SLU 60	-60	83	7221	-70.54	-3.26	0.56
186	SLU 61	-37	83	7195	-70.38	-2.23	0.55
186	SLU 62	-38	85	7281	-71.96	-2.04	0.57
186	SLU 63	-15	85	7255	-71.81	-1.01	0.56
186	SLU 64	-59	79	6700	-67.1	-3.14	0.54
186	SLU 65	-20	79	6656	-66.84	-1.42	0.53
186	SLU 66	-35	82	6802	-69.22	-1.85	0.56
186	SLU 67	-12	81	6776	-69.07	-0.83	0.55
186	SLU 68	2	80	6717	-68.26	-0.2	0.54
186	SLU 69	-14	83	6862	-70.64	-0.64	0.57
186	SLU 70	10	83	6836	-70.49	0.39	0.57
186	SLU 71	-15	82	6821	-69.94	-0.7	0.56
186	SLU 72	8	82	6794	-69.79	0.33	0.56
186	SLU 73	-17	88	7569	-74.78	-1.27	0.59
186	SLU 74	-32	91	7715	-77.17	-1.7	0.62
186	SLU 75	-9	91	7689	-77.01	-0.67	0.61
186	SLU 76	5	90	7629	-76.21	-0.05	0.6
186	SLU 77	-10	93	7775	-78.59	-0.48	0.63
186	SLU 78	13	92	7749	-78.43	0.55	0.62
186	SLU 79	-12	92	7734	-77.89	-0.54	0.62
186	SLU 80	12	92	7707	-77.73	0.49	0.62
186	SLU 81	-54	93	8004	-78.45	-2.91	0.62
186	SLU 82	-31	92	7978	-78.29	-1.88	0.62
186	SLU 83	-32	94	8065	-79.87	-1.69	0.63
186	SLU 84	-9	94	8038	-79.71	-0.67	0.63
186	SLE RA 1	-47	59	4982	-49.87	-2.49	0.4
186	SLE RA 2	-21	59	4953	-49.7	-1.34	0.39
186	SLE RA 3	-31	60	5050	-51.29	-1.63	0.41
186	SLE RA 4	-16	60	5032	-51.19	-0.95	0.41
186	SLE RA 5	-6	60	4993	-50.65	-0.53	0.4
186	SLE RA 6	-16	62	5090	-52.24	-0.82	0.42
186	SLE RA 7	-1	61	5072	-52.14	-0.14	0.42
186	SLE RA 8	-17	61	5062	-51.77	-0.86	0.42
186	SLE RA 9	-2	61	5045	-51.67	-0.18	0.41
186	SLE RA 10	-19	65	5561	-55	-1.24	0.43
186	SLE RA 11	-29	67	5658	-56.59	-1.53	0.45
186	SLE RA 12	-13	67	5641	-56.48	-0.84	0.45
186	SLE RA 13	-4	66	5601	-55.95	-0.43	0.44
186	SLE RA 14	-14	68	5698	-57.54	-0.72	0.46
186	SLE RA 15	1	68	5681	-57.43	-0.03	0.46
186	SLE RA 16	-15	67	5671	-57.07	-0.76	0.46
186	SLE RA 17	0	67	5653	-56.97	-0.07	0.45
186	SLE RA 18	-44	68	5851	-57.44	-2.34	0.45
186	SLE RA 19	-28	68	5834	-57.34	-1.65	0.45
186	SLE RA 20	-29	69	5891	-58.39	-1.53	0.46
186	SLE RA 21	-13	69	5874	-58.29	-0.84	0.46
186	SLE FR 1	-47	59	4982	-49.87	-2.49	0.4
186	SLE FR 2	-41	59	4976	-49.84	-2.26	0.4
186	SLE FR 3	-41	59	4998	-50.25	-2.16	0.4
186	SLE FR 4	-41	61	5237	-52.11	-2.21	0.41
186	SLE FR 5	-40	62	5259	-52.52	-2.12	0.42
186	SLE FR 6	-45	63	5417	-53.66	-2.41	0.43
186	SLE QP 1	-47	59	4982	-49.87	-2.49	0.4
186	SLE QP 2	-46	61	5243	-52.14	-2.44	0.42
186	SLD 1	711	80	4386	-68.69	40.93	0.61
186	SLD 2	711	80	4386	-68.69	40.93	0.61
186	SLD 3	769	54	4066	-45.91	43.97	0.48
186	SLD 4	769	54	4066	-45.91	43.97	0.48
186	SLD 5	93	106	5471	-91.67	5.95	0.66
186	SLD 6	93	106	5471	-91.67	5.95	0.66
186	SLD 7	287	20	4404	-15.71	16.1	0.24
186	SLD 8	287	20	4404	-15.71	16.1	0.24
186	SLD 9	-378	102	6081	-88.57	-20.99	0.59
186	SLD 10	-378	102	6081	-88.57	-20.99	0.59
186	SLD 11	-185	17	5014	-12.62	-10.83	0.17
186	SLD 12	-185	17	5014	-12.62	-10.83	0.17
186	SLD 13	-861	69	6420	-58.38	-48.86	0.35
186	SLD 14	-861	69	6420	-58.38	-48.86	0.35
186	SLD 15	-803	43	6100	-35.59	-45.81	0.22
186	SLD 16	-803	43	6100	-35.59	-45.81	0.22
186	SLV 1	1724	104	3241	-90.94	98.95	0.87
186	SLV 2	1724	104	3241	-90.94	98.95	0.87
186	SLV 3	1863	44	2483	-37.55	106.23	0.57
186	SLV 4	1863	44	2483	-37.55	106.23	0.57
186	SLV 5	274	165	5792	-144.76	16.94	1
186	SLV 6	274	165	5792	-144.76	16.94	1
186	SLV 7	738	-35	3265	33.21	41.19	0.01

Nodo	Cont.	Reazione a traslazione			Reazione a rotazione		
Ind.	N.br.	x	y	z	x	y	z
186	SLV 8	738	-35	3265	33.21	41.19	0.01
186	SLV 9	-830	157	7221	-137.5	-46.08	0.82
186	SLV 10	-830	157	7221	-137.5	-46.08	0.82
186	SLV 11	-365	-42	4693	40.47	-21.83	-0.17
186	SLV 12	-365	-42	4693	40.47	-21.83	-0.17
186	SLV 13	-1954	79	8003	-66.73	-111.11	0.26
186	SLV 14	-1954	79	8003	-66.73	-111.11	0.26
186	SLV 15	-1815	19	7244	-13.34	-103.84	-0.03
186	SLV 16	-1815	19	7244	-13.34	-103.84	-0.03
187	SLU 1	-302	59	4935	-48.47	-12.88	-0.12
187	SLU 2	-266	58	4895	-48.14	-11.36	-0.11
187	SLU 3	-278	62	5017	-50.67	-11.92	-0.13
187	SLU 4	-256	61	4992	-50.46	-11.01	-0.12
187	SLU 5	-241	60	4933	-49.61	-10.38	-0.11
187	SLU 6	-253	63	5056	-52.14	-10.94	-0.13
187	SLU 7	-231	63	5031	-51.94	-10.03	-0.13
187	SLU 8	-252	62	5013	-51.42	-10.91	-0.13
187	SLU 9	-231	62	4988	-51.22	-10	-0.13
187	SLU 10	-315	68	5848	-56.18	-13.47	-0.12
187	SLU 11	-327	71	5971	-58.71	-14.02	-0.14
187	SLU 12	-306	71	5946	-58.5	-13.12	-0.14
187	SLU 13	-291	70	5887	-57.65	-12.48	-0.13
187	SLU 14	-302	73	6009	-60.18	-13.04	-0.15
187	SLU 15	-281	73	5985	-59.98	-12.13	-0.14
187	SLU 16	-302	72	5967	-59.46	-13.01	-0.14
187	SLU 17	-280	72	5942	-59.26	-12.1	-0.14
187	SLU 18	-372	73	6298	-59.96	-15.88	-0.14
187	SLU 19	-351	73	6274	-59.76	-14.97	-0.13
187	SLU 20	-347	75	6337	-61.43	-14.9	-0.14
187	SLU 21	-326	74	6312	-61.23	-13.99	-0.14
187	SLU 22	-338	69	5747	-56.54	-14.44	-0.14
187	SLU 23	-302	68	5706	-56.2	-12.93	-0.13
187	SLU 24	-314	71	5828	-58.73	-13.48	-0.15
187	SLU 25	-292	71	5803	-58.53	-12.58	-0.14
187	SLU 26	-278	70	5744	-57.67	-11.94	-0.14
187	SLU 27	-289	73	5867	-60.2	-12.5	-0.16
187	SLU 28	-268	73	5842	-60	-11.59	-0.15
187	SLU 29	-289	72	5824	-59.48	-12.47	-0.15
187	SLU 30	-267	72	5800	-59.28	-11.56	-0.15
187	SLU 31	-352	78	6660	-64.24	-15.03	-0.14
187	SLU 32	-363	81	6782	-66.77	-15.59	-0.16
187	SLU 33	-342	81	6757	-66.57	-14.68	-0.16
187	SLU 34	-327	80	6698	-65.71	-14.04	-0.15
187	SLU 35	-339	83	6821	-68.24	-14.6	-0.17
187	SLU 36	-317	83	6796	-68.04	-13.69	-0.16
187	SLU 37	-338	82	6778	-67.52	-14.57	-0.17
187	SLU 38	-317	82	6753	-67.32	-13.66	-0.16
187	SLU 39	-408	83	7109	-68.02	-17.44	-0.16
187	SLU 40	-387	82	7085	-67.82	-16.54	-0.15
187	SLU 41	-384	85	7148	-69.49	-16.46	-0.17
187	SLU 42	-362	84	7124	-69.29	-15.55	-0.16
187	SLU 43	-380	73	6138	-60.25	-16.2	-0.15
187	SLU 44	-344	73	6097	-59.91	-14.69	-0.14
187	SLU 45	-356	76	6219	-62.44	-15.25	-0.16
187	SLU 46	-334	76	6195	-62.24	-14.34	-0.15
187	SLU 47	-319	75	6136	-61.39	-13.71	-0.14
187	SLU 48	-331	78	6258	-63.91	-14.26	-0.16
187	SLU 49	-309	77	6233	-63.71	-13.35	-0.16
187	SLU 50	-330	77	6215	-63.19	-14.23	-0.16
187	SLU 51	-309	77	6191	-62.99	-13.33	-0.15
187	SLU 52	-393	83	7051	-67.95	-16.79	-0.15
187	SLU 53	-405	86	7173	-70.48	-17.35	-0.17
187	SLU 54	-384	85	7149	-70.28	-16.44	-0.16
187	SLU 55	-369	84	7090	-69.43	-15.81	-0.16
187	SLU 56	-380	87	7212	-71.95	-16.36	-0.18
187	SLU 57	-359	87	7187	-71.75	-15.46	-0.17
187	SLU 58	-380	87	7169	-71.23	-16.34	-0.17
187	SLU 59	-358	86	7145	-71.03	-15.43	-0.17
187	SLU 60	-450	87	7501	-71.73	-19.21	-0.17
187	SLU 61	-429	87	7476	-71.53	-18.3	-0.16
187	SLU 62	-426	89	7539	-73.21	-18.22	-0.17
187	SLU 63	-404	89	7515	-73.01	-17.31	-0.17
187	SLU 64	-416	83	6949	-68.31	-17.77	-0.17
187	SLU 65	-380	83	6908	-67.98	-16.25	-0.16
187	SLU 66	-392	86	7031	-70.51	-16.81	-0.18
187	SLU 67	-370	85	7006	-70.3	-15.9	-0.17
187	SLU 68	-356	84	6947	-69.45	-15.27	-0.16
187	SLU 69	-367	87	7069	-71.98	-15.83	-0.18
187	SLU 70	-346	87	7045	-71.78	-14.92	-0.18
187	SLU 71	-367	87	7027	-71.26	-15.8	-0.18
187	SLU 72	-345	86	7002	-71.06	-14.89	-0.17
187	SLU 73	-430	92	7862	-76.02	-18.36	-0.17
187	SLU 74	-441	95	7984	-78.55	-18.91	-0.19
187	SLU 75	-420	95	7960	-78.34	-18.01	-0.18
187	SLU 76	-405	94	7901	-77.49	-17.37	-0.18
187	SLU 77	-417	97	8023	-80.02	-17.93	-0.2
187	SLU 78	-395	97	7999	-79.82	-17.02	-0.19
187	SLU 79	-416	96	7980	-79.3	-17.9	-0.19
187	SLU 80	-395	96	7956	-79.1	-16.99	-0.19
187	SLU 81	-486	97	8312	-79.8	-20.77	-0.19

Nodo	Cont.	Reazione a traslazione			Reazione a rotazione		
Ind.	N.br.	x	y	z	x	y	z
187	SLU 82	-465	97	8287	-79.6	-19.86	-0.18
187	SLU 83	-462	99	8351	-81.27	-19.79	-0.19
187	SLU 84	-440	99	8326	-81.07	-18.88	-0.19
187	SLE RA 1	-312	62	5167	-50.78	-13.32	-0.12
187	SLE RA 2	-288	61	5140	-50.55	-12.31	-0.12
187	SLE RA 3	-296	63	5221	-52.24	-12.69	-0.13
187	SLE RA 4	-282	63	5205	-52.1	-12.08	-0.13
187	SLE RA 5	-272	63	5166	-51.53	-11.66	-0.12
187	SLE RA 6	-279	65	5247	-53.22	-12.03	-0.13
187	SLE RA 7	-265	64	5231	-53.09	-11.42	-0.13
187	SLE RA 8	-279	64	5219	-52.74	-12.01	-0.13
187	SLE RA 9	-265	64	5202	-52.6	-11.4	-0.13
187	SLE RA 10	-321	68	5776	-55.91	-13.72	-0.13
187	SLE RA 11	-329	70	5857	-57.6	-14.09	-0.14
187	SLE RA 12	-315	70	5841	-57.46	-13.48	-0.14
187	SLE RA 13	-305	69	5802	-56.89	-13.06	-0.13
187	SLE RA 14	-312	71	5883	-58.58	-13.43	-0.14
187	SLE RA 15	-298	71	5867	-58.45	-12.83	-0.14
187	SLE RA 16	-312	71	5855	-58.1	-13.41	-0.14
187	SLE RA 17	-298	70	5838	-57.96	-12.81	-0.14
187	SLE RA 18	-359	71	6076	-58.43	-15.33	-0.14
187	SLE RA 19	-345	71	6059	-58.3	-14.72	-0.13
187	SLE RA 20	-343	72	6101	-59.41	-14.67	-0.14
187	SLE RA 21	-328	72	6085	-59.28	-14.06	-0.14
187	SLE FR 1	-312	62	5167	-50.78	-13.32	-0.12
187	SLE FR 2	-307	62	5162	-50.73	-13.12	-0.12
187	SLE FR 3	-305	62	5178	-51.17	-13.06	-0.13
187	SLE FR 4	-321	64	5434	-53.03	-13.72	-0.13
187	SLE FR 5	-319	65	5450	-53.47	-13.66	-0.13
187	SLE FR 6	-335	66	5621	-54.6	-14.32	-0.13
187	SLE QP 1	-312	62	5167	-50.78	-13.32	-0.12
187	SLE QP 2	-326	64	5440	-53.07	-13.92	-0.13
187	SLD 1	708	81	3604	-68.95	27.64	-0.04
187	SLD 2	708	81	3604	-68.95	27.64	-0.04
187	SLD 3	778	61	3281	-48.86	30.55	-0.48
187	SLD 4	778	61	3281	-48.86	30.55	-0.48
187	SLD 5	-123	99	5379	-88.31	-5.88	0.56
187	SLD 6	-123	99	5379	-88.31	-5.88	0.56
187	SLD 7	112	34	4302	-21.33	3.84	-0.89
187	SLD 8	112	34	4302	-21.33	3.84	-0.89
187	SLD 9	-765	95	6577	-84.82	-31.69	0.64
187	SLD 10	-765	95	6577	-84.82	-31.69	0.64
187	SLD 11	-529	30	5501	-17.83	-21.97	-0.82
187	SLD 12	-529	30	5501	-17.83	-21.97	-0.82
187	SLD 13	-1430	68	7599	-57.29	-58.4	0.22
187	SLD 14	-1430	68	7599	-57.29	-58.4	0.22
187	SLD 15	-1360	48	7276	-37.19	-55.48	-0.22
187	SLD 16	-1360	48	7276	-37.19	-55.48	-0.22
187	SLV 1	2091	103	1147	-90.3	83.25	0.08
187	SLV 2	2091	103	1147	-90.3	83.25	0.08
187	SLV 3	2259	57	383	-43.21	90.19	-0.94
187	SLV 4	2259	57	383	-43.21	90.19	-0.94
187	SLV 5	144	145	5312	-135.65	4.7	1.49
187	SLV 6	144	145	5312	-135.65	4.7	1.49
187	SLV 7	705	-7	2763	21.29	27.84	-1.93
187	SLV 8	705	-7	2763	21.29	27.84	-1.93
187	SLV 9	-1357	136	8117	-127.44	-55.69	1.67
187	SLV 10	-1357	136	8117	-127.44	-55.69	1.67
187	SLV 11	-796	-16	5568	29.5	-32.55	-1.74
187	SLV 12	-796	-16	5568	29.5	-32.55	-1.74
187	SLV 13	-2911	72	10497	-62.93	-118.04	0.69
187	SLV 14	-2911	72	10497	-62.93	-118.04	0.69
187	SLV 15	-2743	26	9732	-15.85	-111.1	-0.34
187	SLV 16	-2743	26	9732	-15.85	-111.1	-0.34
188	SLU 1	-869	24	2663	-23.97	-18.76	-5.59
188	SLU 2	-850	23	2615	-23.75	-17.8	-5.56
188	SLU 3	-875	25	2670	-25.08	-18.31	-5.84
188	SLU 4	-864	25	2642	-24.95	-17.73	-5.82
188	SLU 5	-849	24	2602	-24.5	-17.23	-5.73
188	SLU 6	-874	26	2657	-25.82	-17.74	-6.01
188	SLU 7	-863	26	2628	-25.69	-17.16	-5.99
188	SLU 8	-867	26	2636	-25.46	-17.63	-5.93
188	SLU 9	-856	25	2607	-25.33	-17.05	-5.91
188	SLU 10	-1016	27	3124	-27.7	-21.31	-6.49
188	SLU 11	-1041	29	3179	-29.03	-21.82	-6.77
188	SLU 12	-1030	29	3150	-28.9	-21.24	-6.75
188	SLU 13	-1015	28	3110	-28.45	-20.74	-6.66
188	SLU 14	-1040	30	3165	-29.77	-21.25	-6.94
188	SLU 15	-1029	29	3137	-29.64	-20.68	-6.92
188	SLU 16	-1033	29	3144	-29.41	-21.14	-6.86
188	SLU 17	-1022	29	3116	-29.28	-20.56	-6.84
188	SLU 18	-1105	29	3389	-29.62	-23.78	-6.92
188	SLU 19	-1094	29	3361	-29.48	-23.2	-6.9
188	SLU 20	-1105	30	3376	-30.36	-23.21	-7.09
188	SLU 21	-1094	30	3347	-30.23	-22.64	-7.07
188	SLU 22	-1008	28	3087	-27.98	-21.59	-6.52
188	SLU 23	-990	28	3039	-27.75	-20.63	-6.49
188	SLU 24	-1014	29	3094	-29.08	-21.14	-6.77
188	SLU 25	-1003	29	3066	-28.95	-20.56	-6.75
188	SLU 26	-989	28	3026	-28.5	-20.06	-6.66

Nodo	Cont.	Reazione a traslazione			Reazione a rotazione		
Ind.	N.br.	x	y	z	x	y	z
188	SLU 27	-1014	30	3081	-29.83	-20.57	-6.94
188	SLU 28	-1003	30	3052	-29.69	-19.99	-6.92
188	SLU 29	-1007	30	3060	-29.46	-20.45	-6.86
188	SLU 30	-996	29	3031	-29.33	-19.87	-6.84
188	SLU 31	-1155	31	3548	-31.7	-24.14	-7.42
188	SLU 32	-1180	33	3603	-33.03	-24.65	-7.7
188	SLU 33	-1169	33	3574	-32.9	-24.07	-7.68
188	SLU 34	-1155	32	3534	-32.45	-23.57	-7.59
188	SLU 35	-1180	34	3589	-33.77	-24.08	-7.87
188	SLU 36	-1168	34	3560	-33.64	-23.5	-7.85
188	SLU 37	-1173	33	3568	-33.41	-23.96	-7.79
188	SLU 38	-1162	33	3539	-33.28	-23.39	-7.77
188	SLU 39	-1245	33	3813	-33.62	-26.61	-7.85
188	SLU 40	-1234	33	3785	-33.48	-26.03	-7.83
188	SLU 41	-1244	34	3800	-34.36	-26.04	-8.02
188	SLU 42	-1233	34	3771	-34.23	-25.46	-8
188	SLU 43	-1081	30	3317	-29.79	-23.42	-6.95
188	SLU 44	-1063	29	3269	-29.57	-22.46	-6.92
188	SLU 45	-1088	31	3324	-30.9	-22.97	-7.2
188	SLU 46	-1077	31	3295	-30.77	-22.39	-7.18
188	SLU 47	-1062	30	3255	-30.32	-21.89	-7.09
188	SLU 48	-1087	32	3310	-31.64	-22.4	-7.37
188	SLU 49	-1076	31	3282	-31.51	-21.82	-7.35
188	SLU 50	-1080	31	3289	-31.28	-22.28	-7.29
188	SLU 51	-1069	31	3261	-31.15	-21.71	-7.27
188	SLU 52	-1228	33	3777	-33.52	-25.97	-7.85
188	SLU 53	-1253	35	3832	-34.85	-26.48	-8.13
188	SLU 54	-1242	34	3804	-34.72	-25.9	-8.11
188	SLU 55	-1228	34	3764	-34.27	-25.4	-8.02
188	SLU 56	-1253	36	3819	-35.59	-25.91	-8.3
188	SLU 57	-1242	35	3790	-35.46	-25.34	-8.28
188	SLU 58	-1246	35	3798	-35.23	-25.8	-8.22
188	SLU 59	-1235	35	3769	-35.1	-25.22	-8.2
188	SLU 60	-1318	35	4043	-35.44	-28.44	-8.28
188	SLU 61	-1307	35	4014	-35.3	-27.86	-8.26
188	SLU 62	-1317	36	4029	-36.18	-27.87	-8.45
188	SLU 63	-1306	36	4001	-36.05	-27.29	-8.43
188	SLU 64	-1221	34	3741	-33.8	-26.25	-7.88
188	SLU 65	-1202	33	3693	-33.57	-25.29	-7.85
188	SLU 66	-1227	35	3748	-34.9	-25.79	-8.13
188	SLU 67	-1216	35	3719	-34.77	-25.22	-8.11
188	SLU 68	-1202	34	3679	-34.32	-24.72	-8.02
188	SLU 69	-1227	36	3734	-35.65	-25.23	-8.3
188	SLU 70	-1215	35	3706	-35.51	-24.65	-8.28
188	SLU 71	-1220	35	3713	-35.28	-25.11	-8.22
188	SLU 72	-1209	35	3685	-35.15	-24.53	-8.2
188	SLU 73	-1368	37	4201	-37.52	-28.8	-8.78
188	SLU 74	-1393	39	4256	-38.85	-29.31	-9.06
188	SLU 75	-1382	39	4228	-38.72	-28.73	-9.04
188	SLU 76	-1367	38	4188	-38.27	-28.23	-8.94
188	SLU 77	-1392	40	4243	-39.6	-28.74	-9.23
188	SLU 78	-1381	39	4214	-39.46	-28.16	-9.21
188	SLU 79	-1385	39	4222	-39.23	-28.62	-9.15
188	SLU 80	-1374	39	4193	-39.1	-28.05	-9.13
188	SLU 81	-1458	39	4467	-39.44	-31.27	-9.21
188	SLU 82	-1446	39	4438	-39.3	-30.69	-9.19
188	SLU 83	-1457	40	4453	-40.18	-30.7	-9.38
188	SLU 84	-1446	40	4425	-40.05	-30.12	-9.36
188	SLE RA 1	-908	25	2784	-25.12	-19.57	-5.86
188	SLE RA 2	-896	25	2752	-24.97	-18.93	-5.84
188	SLE RA 3	-913	26	2789	-25.85	-19.27	-6.03
188	SLE RA 4	-905	26	2770	-25.77	-18.88	-6.01
188	SLE RA 5	-896	25	2743	-25.47	-18.55	-5.95
188	SLE RA 6	-912	26	2780	-26.35	-18.89	-6.14
188	SLE RA 7	-905	26	2761	-26.26	-18.5	-6.12
188	SLE RA 8	-908	26	2766	-26.11	-18.81	-6.08
188	SLE RA 9	-900	26	2747	-26.02	-18.43	-6.07
188	SLE RA 10	-1007	27	3091	-27.6	-21.27	-6.45
188	SLE RA 11	-1023	28	3128	-28.49	-21.61	-6.65
188	SLE RA 12	-1016	28	3109	-28.4	-21.22	-6.63
188	SLE RA 13	-1006	28	3082	-28.1	-20.89	-6.57
188	SLE RA 14	-1023	29	3119	-28.98	-21.23	-6.76
188	SLE RA 15	-1015	29	3100	-28.89	-20.85	-6.74
188	SLE RA 16	-1018	29	3105	-28.74	-21.15	-6.7
188	SLE RA 17	-1011	29	3086	-28.65	-20.77	-6.69
188	SLE RA 18	-1066	29	3268	-28.88	-22.92	-6.74
188	SLE RA 19	-1059	29	3249	-28.79	-22.53	-6.73
188	SLE RA 20	-1066	29	3259	-29.38	-22.54	-6.86
188	SLE RA 21	-1058	29	3240	-29.29	-22.15	-6.84
188	SLE FR 1	-908	25	2784	-25.12	-19.57	-5.86
188	SLE FR 2	-906	25	2778	-25.09	-19.44	-5.85
188	SLE FR 3	-908	25	2781	-25.32	-19.42	-5.9
188	SLE FR 4	-953	26	2923	-26.22	-20.44	-6.12
188	SLE FR 5	-956	26	2926	-26.44	-20.42	-6.17
188	SLE FR 6	-987	27	3026	-27	-21.24	-6.3
188	SLE QP 1	-908	25	2784	-25.12	-19.57	-5.86
188	SLE QP 2	-956	26	2929	-26.25	-20.57	-6.12
188	SLD 1	-383	35	693	-32.8	11.4	-8.08
188	SLD 2	-383	35	693	-32.8	11.4	-8.08
188	SLD 3	-317	27	500	-26.1	13.64	-5.5

Nodo	Cont.	Reazione a traslazione			Reazione a rotazione		
Ind.	N.br.	x	y	z	x	y	z
188	SLD 4	-317	27	500	-26.1	13.64	-5.5
188	SLD 5	-885	41	2551	-38.37	-14.39	-10.63
188	SLD 6	-885	41	2551	-38.37	-14.39	-10.63
188	SLD 7	-663	15	1908	-16.04	-6.9	-2.02
188	SLD 8	-663	15	1908	-16.04	-6.9	-2.02
188	SLD 9	-1248	38	3951	-36.45	-34.25	-10.22
188	SLD 10	-1248	38	3951	-36.45	-34.25	-10.22
188	SLD 11	-1027	12	3308	-14.12	-26.75	-1.62
188	SLD 12	-1027	12	3308	-14.12	-26.75	-1.62
188	SLD 13	-1594	25	5358	-26.39	-54.79	-6.75
188	SLD 14	-1594	25	5358	-26.39	-54.79	-6.75
188	SLD 15	-1528	17	5165	-19.7	-52.54	-4.17
188	SLD 16	-1528	17	5165	-19.7	-52.54	-4.17
188	SLV 1	382	47	-2300	-41.6	54.19	-10.71
188	SLV 2	382	47	-2300	-41.6	54.19	-10.71
188	SLV 3	540	28	-2757	-25.9	59.53	-4.67
188	SLV 4	540	28	-2757	-25.9	59.53	-4.67
188	SLV 5	-793	60	2053	-54.66	-6.23	-16.67
188	SLV 6	-793	60	2053	-54.66	-6.23	-16.67
188	SLV 7	-268	-1	531	-2.34	11.54	3.48
188	SLV 8	-268	-1	531	-2.34	11.54	3.48
188	SLV 9	-1643	54	5328	-50.15	-52.69	-15.73
188	SLV 10	-1643	54	5328	-50.15	-52.69	-15.73
188	SLV 11	-1118	-8	3806	2.16	-34.92	4.42
188	SLV 12	-1118	-8	3806	2.16	-34.92	4.42
188	SLV 13	-2451	24	8616	-26.59	-100.67	-7.58
188	SLV 14	-2451	24	8616	-26.59	-100.67	-7.58
188	SLV 15	-2294	6	8159	-10.89	-95.34	-1.53
188	SLV 16	-2294	6	8159	-10.89	-95.34	-1.53
189	SLU 1	1353	-4	4497	1.53	16.64	-0.1
189	SLU 2	1398	-5	4620	1.75	17.49	-0.12
189	SLU 3	1421	-4	4695	1.52	17.75	-0.09
189	SLU 4	1448	-5	4770	1.65	18.26	-0.1
189	SLU 5	1450	-5	4765	1.74	18.39	-0.12
189	SLU 6	1473	-4	4840	1.51	18.65	-0.08
189	SLU 7	1500	-5	4914	1.64	19.16	-0.1
189	SLU 8	1457	-4	4787	1.51	18.44	-0.08
189	SLU 9	1484	-5	4861	1.64	18.95	-0.1
189	SLU 10	1623	-9	5388	2.52	20.03	-0.25
189	SLU 11	1647	-8	5462	2.3	20.29	-0.21
189	SLU 12	1674	-8	5537	2.43	20.8	-0.23
189	SLU 13	1675	-9	5533	2.51	20.93	-0.25
189	SLU 14	1699	-8	5607	2.29	21.19	-0.21
189	SLU 15	1726	-8	5682	2.42	21.7	-0.23
189	SLU 16	1682	-8	5554	2.28	20.98	-0.21
189	SLU 17	1709	-8	5628	2.42	21.49	-0.23
189	SLU 18	1675	-10	5593	2.64	20.27	-0.28
189	SLU 19	1702	-10	5667	2.77	20.78	-0.3
189	SLU 20	1727	-9	5738	2.63	21.17	-0.27
189	SLU 21	1754	-10	5812	2.76	21.68	-0.29
189	SLU 22	1561	-5	5196	1.78	19.07	-0.12
189	SLU 23	1606	-6	5320	2	19.92	-0.15
189	SLU 24	1629	-5	5395	1.78	20.18	-0.11
189	SLU 25	1656	-6	5469	1.91	20.69	-0.13
189	SLU 26	1658	-6	5465	1.99	20.82	-0.14
189	SLU 27	1681	-5	5540	1.77	21.08	-0.1
189	SLU 28	1708	-5	5614	1.9	21.59	-0.12
189	SLU 29	1665	-5	5486	1.76	20.87	-0.1
189	SLU 30	1692	-5	5560	1.89	21.38	-0.12
189	SLU 31	1831	-10	6087	2.78	22.46	-0.28
189	SLU 32	1855	-9	6162	2.56	22.72	-0.24
189	SLU 33	1882	-9	6236	2.69	23.23	-0.25
189	SLU 34	1883	-9	6232	2.77	23.36	-0.27
189	SLU 35	1906	-9	6307	2.55	23.62	-0.23
189	SLU 36	1934	-9	6381	2.68	24.13	-0.25
189	SLU 37	1890	-9	6253	2.54	23.41	-0.23
189	SLU 38	1917	-9	6327	2.67	23.92	-0.25
189	SLU 39	1883	-10	6292	2.9	22.69	-0.3
189	SLU 40	1910	-11	6366	3.03	23.2	-0.32
189	SLU 41	1935	-10	6437	2.89	23.6	-0.29
189	SLU 42	1962	-11	6511	3.02	24.11	-0.31
189	SLU 43	1688	-6	5606	1.9	20.8	-0.12
189	SLU 44	1733	-6	5730	2.12	21.65	-0.15
189	SLU 45	1756	-5	5804	1.89	21.91	-0.11
189	SLU 46	1783	-6	5879	2.02	22.42	-0.12
189	SLU 47	1785	-6	5875	2.11	22.55	-0.14
189	SLU 48	1808	-5	5949	1.88	22.81	-0.1
189	SLU 49	1835	-6	6024	2.01	23.32	-0.12
189	SLU 50	1791	-5	5896	1.88	22.6	-0.1
189	SLU 51	1818	-6	5970	2.01	23.11	-0.12
189	SLU 52	1958	-10	6497	2.89	24.19	-0.27
189	SLU 53	1981	-9	6572	2.67	24.45	-0.24
189	SLU 54	2008	-9	6646	2.8	24.96	-0.25
189	SLU 55	2010	-10	6642	2.88	25.09	-0.27
189	SLU 56	2033	-9	6717	2.66	25.35	-0.23
189	SLU 57	2060	-9	6791	2.79	25.86	-0.25
189	SLU 58	2017	-9	6663	2.66	25.14	-0.23
189	SLU 59	2044	-9	6737	2.79	25.65	-0.25
189	SLU 60	2010	-11	6702	3.01	24.43	-0.3
189	SLU 61	2037	-11	6776	3.14	24.94	-0.32

Nodo	Cont.	Reazione a traslazione			Reazione a rotazione		
Ind.	N.br.	x	y	z	x	y	z
189	SLU 62	2062	-11	6847	3	25.33	-0.29
189	SLU 63	2089	-11	6921	3.13	25.84	-0.31
189	SLU 64	1896	-6	6305	2.15	23.23	-0.14
189	SLU 65	1941	-7	6429	2.37	24.08	-0.17
189	SLU 66	1964	-6	6504	2.15	24.34	-0.13
189	SLU 67	1991	-7	6578	2.28	24.85	-0.15
189	SLU 68	1993	-7	6574	2.36	24.98	-0.16
189	SLU 69	2016	-6	6649	2.14	25.24	-0.12
189	SLU 70	2043	-7	6723	2.27	25.75	-0.14
189	SLU 71	1999	-6	6595	2.13	25.03	-0.12
189	SLU 72	2026	-7	6669	2.27	25.54	-0.14
189	SLU 73	2166	-11	7196	3.15	26.62	-0.3
189	SLU 74	2189	-10	7271	2.93	26.88	-0.26
189	SLU 75	2216	-10	7345	3.06	27.39	-0.28
189	SLU 76	2218	-10	7341	3.14	27.52	-0.29
189	SLU 77	2241	-10	7416	2.92	27.78	-0.25
189	SLU 78	2268	-10	7490	3.05	28.29	-0.27
189	SLU 79	2225	-10	7362	2.91	27.57	-0.25
189	SLU 80	2252	-10	7437	3.04	28.08	-0.27
189	SLU 81	2218	-12	7401	3.27	26.86	-0.32
189	SLU 82	2245	-12	7476	3.4	27.37	-0.34
189	SLU 83	2269	-11	7546	3.26	27.76	-0.32
189	SLU 84	2296	-12	7621	3.39	28.27	-0.33
189	SLE RA 1	1412	-5	4696	1.6	17.33	-0.1
189	SLE RA 2	1442	-5	4779	1.75	17.9	-0.12
189	SLE RA 3	1458	-5	4829	1.6	18.07	-0.1
189	SLE RA 4	1476	-5	4878	1.68	18.41	-0.11
189	SLE RA 5	1477	-5	4876	1.74	18.5	-0.12
189	SLE RA 6	1493	-5	4926	1.59	18.68	-0.09
189	SLE RA 7	1511	-5	4975	1.68	19.01	-0.1
189	SLE RA 8	1482	-5	4890	1.59	18.54	-0.09
189	SLE RA 9	1500	-5	4939	1.67	18.88	-0.1
189	SLE RA 10	1593	-8	5290	2.26	19.59	-0.21
189	SLE RA 11	1608	-7	5340	2.12	19.77	-0.18
189	SLE RA 12	1626	-7	5390	2.2	20.11	-0.19
189	SLE RA 13	1627	-7	5387	2.26	20.19	-0.2
189	SLE RA 14	1643	-7	5437	2.11	20.37	-0.18
189	SLE RA 15	1661	-7	5487	2.2	20.71	-0.19
189	SLE RA 16	1632	-7	5401	2.11	20.23	-0.18
189	SLE RA 17	1650	-7	5451	2.19	20.57	-0.19
189	SLE RA 18	1627	-8	5427	2.34	19.75	-0.22
189	SLE RA 19	1645	-8	5477	2.43	20.09	-0.24
189	SLE RA 20	1662	-8	5524	2.33	20.35	-0.22
189	SLE RA 21	1680	-8	5573	2.42	20.69	-0.23
189	SLE FR 1	1412	-5	4696	1.6	17.33	-0.1
189	SLE FR 2	1418	-5	4713	1.63	17.45	-0.11
189	SLE FR 3	1426	-5	4735	1.6	17.57	-0.1
189	SLE FR 4	1483	-6	4932	1.85	18.17	-0.14
189	SLE FR 5	1491	-6	4954	1.82	18.3	-0.14
189	SLE FR 6	1520	-6	5062	1.97	18.54	-0.16
189	SLE QP 1	1412	-5	4696	1.6	17.33	-0.1
189	SLE QP 2	1477	-6	4916	1.82	18.06	-0.14
189	SLD 1	2140	20	6137	-3.14	35.71	0.92
189	SLD 2	2140	20	6137	-3.14	35.71	0.92
189	SLD 3	2305	13	6605	-1.58	38.65	0.61
189	SLD 4	2305	13	6605	-1.58	38.65	0.61
189	SLD 5	1427	13	4573	-2.03	18.89	0.64
189	SLD 6	1427	13	4573	-2.03	18.89	0.64
189	SLD 7	1974	-11	6132	3.17	28.71	-0.38
189	SLD 8	1974	-11	6132	3.17	28.71	-0.38
189	SLD 9	979	0	3700	0.48	7.41	0.1
189	SLD 10	979	0	3700	0.48	7.41	0.1
189	SLD 11	1527	-24	5258	5.68	17.23	-0.92
189	SLD 12	1527	-24	5258	5.68	17.23	-0.92
189	SLD 13	649	-24	3227	5.23	-2.53	-0.89
189	SLD 14	649	-24	3227	5.23	-2.53	-0.89
189	SLD 15	813	-31	3694	6.79	0.41	-1.2
189	SLD 16	813	-31	3694	6.79	0.41	-1.2
189	SLV 1	3026	54	7764	-9.84	59.31	2.34
189	SLV 2	3026	54	7764	-9.84	59.31	2.34
189	SLV 3	3416	37	8876	-6.13	66.28	1.62
189	SLV 4	3416	37	8876	-6.13	66.28	1.62
189	SLV 5	1350	38	4084	-7.29	19.85	1.71
189	SLV 6	1350	38	4084	-7.29	19.85	1.71
189	SLV 7	2650	-18	7790	5.05	43.11	-0.71
189	SLV 8	2650	-18	7790	5.05	43.11	-0.71
189	SLV 9	304	7	2042	-1.41	-6.99	0.43
189	SLV 10	304	7	2042	-1.41	-6.99	0.43
189	SLV 11	1603	-49	5747	10.94	16.27	-1.98
189	SLV 12	1603	-49	5747	10.94	16.27	-1.98
189	SLV 13	-463	-49	956	9.78	-30.16	-1.89
189	SLV 14	-463	-49	956	9.78	-30.16	-1.89
189	SLV 15	-73	-66	2067	13.48	-23.19	-2.62
189	SLV 16	-73	-66	2067	13.48	-23.19	-2.62
190	SLU 1	-579	-1719	11185	33.21	-0.02	0.22
190	SLU 2	-585	-1821	11521	36.52	0.55	0.26
190	SLU 3	-604	-1776	11538	34.3	0.78	0.22
190	SLU 4	-608	-1837	11740	36.28	1.12	0.24
190	SLU 5	-604	-1858	11743	37.24	1.32	0.26
190	SLU 6	-623	-1813	11760	35.02	1.55	0.22

Nodo	Cont.	Reazione a traslazione			Reazione a rotazione		
Ind.	N.br.	x	y	z	x	y	z
190	SLU 7	-627	-1874	11961	37	1.9	0.24
190	SLU 8	-617	-1793	11628	34.65	1.54	0.22
190	SLU 9	-620	-1854	11830	36.64	1.88	0.24
190	SLU 10	-694	-2111	13462	41.74	-0.07	0.38
190	SLU 11	-713	-2066	13479	39.52	0.16	0.34
190	SLU 12	-717	-2127	13681	41.5	0.5	0.36
190	SLU 13	-713	-2148	13684	42.46	0.71	0.38
190	SLU 14	-732	-2103	13701	40.23	0.94	0.34
190	SLU 15	-736	-2164	13903	42.22	1.28	0.36
190	SLU 16	-725	-2083	13570	39.87	0.92	0.34
190	SLU 17	-729	-2144	13772	41.86	1.26	0.36
190	SLU 18	-734	-2133	13958	40.67	-0.9	0.39
190	SLU 19	-738	-2195	14160	42.65	-0.56	0.42
190	SLU 20	-753	-2170	14180	41.39	-0.12	0.39
190	SLU 21	-757	-2232	14382	43.37	0.22	0.42
190	SLU 22	-676	-1974	12916	37.77	-0.35	0.26
190	SLU 23	-682	-2077	13253	41.08	0.22	0.29
190	SLU 24	-701	-2031	13269	38.85	0.45	0.26
190	SLU 25	-705	-2092	13471	40.84	0.79	0.28
190	SLU 26	-701	-2114	13475	41.8	1	0.29
190	SLU 27	-720	-2068	13491	39.57	1.23	0.26
190	SLU 28	-724	-2129	13693	41.56	1.57	0.28
190	SLU 29	-713	-2048	13360	39.21	1.21	0.26
190	SLU 30	-717	-2110	13562	41.2	1.55	0.28
190	SLU 31	-791	-2367	15194	46.3	-0.39	0.42
190	SLU 32	-810	-2321	15211	44.07	-0.16	0.38
190	SLU 33	-814	-2382	15413	46.06	0.18	0.4
190	SLU 34	-810	-2404	15416	47.02	0.39	0.42
190	SLU 35	-829	-2358	15433	44.79	0.62	0.38
190	SLU 36	-833	-2419	15635	46.78	0.96	0.4
190	SLU 37	-822	-2338	15301	44.43	0.6	0.38
190	SLU 38	-826	-2400	15503	46.42	0.94	0.4
190	SLU 39	-831	-2389	15690	45.23	-1.22	0.43
190	SLU 40	-835	-2450	15892	47.21	-0.88	0.45
190	SLU 41	-850	-2425	15912	45.95	-0.44	0.43
190	SLU 42	-854	-2487	16114	47.93	-0.1	0.45
190	SLU 43	-719	-2147	13946	41.61	0.08	0.27
190	SLU 44	-725	-2250	14283	44.92	0.65	0.31
190	SLU 45	-745	-2204	14299	42.7	0.88	0.27
190	SLU 46	-748	-2265	14501	44.68	1.22	0.3
190	SLU 47	-744	-2286	14505	45.64	1.43	0.31
190	SLU 48	-764	-2241	14521	43.42	1.66	0.27
190	SLU 49	-767	-2302	14723	45.4	2	0.3
190	SLU 50	-757	-2221	14390	43.05	1.64	0.27
190	SLU 51	-761	-2282	14592	45.04	1.98	0.3
190	SLU 52	-834	-2539	16224	50.14	0.04	0.43
190	SLU 53	-854	-2494	16241	47.92	0.27	0.4
190	SLU 54	-857	-2555	16443	49.9	0.61	0.42
190	SLU 55	-853	-2576	16446	50.86	0.82	0.43
190	SLU 56	-872	-2531	16463	48.64	1.05	0.4
190	SLU 57	-876	-2592	16665	50.62	1.39	0.42
190	SLU 58	-866	-2511	16331	48.27	1.03	0.39
190	SLU 59	-870	-2572	16533	50.26	1.37	0.42
190	SLU 60	-875	-2561	16720	49.07	-0.79	0.45
190	SLU 61	-878	-2623	16922	51.06	-0.45	0.47
190	SLU 62	-894	-2598	16942	49.79	-0.01	0.45
190	SLU 63	-897	-2660	17144	51.77	0.33	0.47
190	SLU 64	-816	-2402	15678	46.17	-0.24	0.31
190	SLU 65	-822	-2505	16014	49.48	0.33	0.35
190	SLU 66	-842	-2459	16031	47.26	0.56	0.31
190	SLU 67	-845	-2521	16233	49.24	0.9	0.33
190	SLU 68	-841	-2542	16236	50.2	1.11	0.35
190	SLU 69	-860	-2496	16253	47.98	1.34	0.31
190	SLU 70	-864	-2557	16455	49.96	1.68	0.33
190	SLU 71	-854	-2476	16122	47.61	1.32	0.31
190	SLU 72	-858	-2538	16324	49.6	1.66	0.33
190	SLU 73	-931	-2795	17956	54.7	-0.29	0.47
190	SLU 74	-950	-2749	17972	52.47	-0.06	0.43
190	SLU 75	-954	-2810	18174	54.46	0.28	0.45
190	SLU 76	-950	-2832	18178	55.42	0.49	0.47
190	SLU 77	-969	-2786	18194	53.19	0.72	0.43
190	SLU 78	-973	-2847	18396	55.18	1.06	0.45
190	SLU 79	-963	-2766	18063	52.83	0.7	0.43
190	SLU 80	-966	-2828	18265	54.82	1.05	0.45
190	SLU 81	-972	-2817	18451	53.63	-1.12	0.49
190	SLU 82	-975	-2878	18653	55.61	-0.78	0.51
190	SLU 83	-991	-2854	18673	54.35	-0.34	0.48
190	SLU 84	-994	-2915	18875	56.33	0	0.51
190	SLE RA 1	-606	-1792	11679	34.52	-0.12	0.23
190	SLE RA 2	-611	-1860	11904	36.72	0.26	0.26
190	SLE RA 3	-623	-1830	11915	35.24	0.42	0.23
190	SLE RA 4	-626	-1871	12049	36.56	0.64	0.25
190	SLE RA 5	-623	-1885	12052	37.2	0.78	0.26
190	SLE RA 6	-636	-1854	12063	35.72	0.94	0.23
190	SLE RA 7	-639	-1895	12197	37.04	1.16	0.25
190	SLE RA 8	-632	-1841	11975	35.48	0.92	0.23
190	SLE RA 9	-634	-1882	12110	36.8	1.15	0.25
190	SLE RA 10	-683	-2053	13198	40.2	-0.14	0.34
190	SLE RA 11	-696	-2023	13209	38.72	0.01	0.31
190	SLE RA 12	-699	-2064	13344	40.04	0.24	0.33

Nodo	Cont.	Reazione a traslazione			Reazione a rotazione		
Ind.	N.br.	x	y	z	x	y	z
190	SLE RA 13	-696	-2078	13346	40.68	0.38	0.34
190	SLE RA 14	-709	-2048	13357	39.2	0.53	0.31
190	SLE RA 15	-711	-2089	13492	40.52	0.76	0.33
190	SLE RA 16	-704	-2035	13270	38.95	0.52	0.31
190	SLE RA 17	-707	-2075	13404	40.28	0.74	0.33
190	SLE RA 18	-710	-2068	13528	39.49	-0.7	0.35
190	SLE RA 19	-713	-2109	13663	40.81	-0.47	0.36
190	SLE RA 20	-723	-2093	13676	39.97	-0.18	0.35
190	SLE RA 21	-725	-2134	13811	41.29	0.05	0.36
190	SLE FR 1	-606	-1792	11679	34.52	-0.12	0.23
190	SLE FR 2	-607	-1806	11724	34.96	-0.04	0.24
190	SLE FR 3	-611	-1802	11739	34.71	0.09	0.23
190	SLE FR 4	-638	-1888	12279	36.45	-0.21	0.27
190	SLE FR 5	-643	-1885	12293	36.2	-0.08	0.27
190	SLE FR 6	-658	-1930	12604	37	-0.41	0.29
190	SLE QP 1	-606	-1792	11679	34.52	-0.12	0.23
190	SLE QP 2	-638	-1875	12234	36.01	-0.29	0.27
190	SLD 1	-843	-1542	9746	26.9	28.22	0.87
190	SLD 2	-843	-1542	9746	26.9	28.22	0.87
190	SLD 3	-885	-1927	11122	38.96	30.66	1.15
190	SLD 4	-885	-1927	11122	38.96	30.66	1.15
190	SLD 5	-636	-1191	9401	14.98	4.56	0.03
190	SLD 6	-636	-1191	9401	14.98	4.56	0.03
190	SLD 7	-775	-2474	13987	55.19	12.69	0.95
190	SLD 8	-775	-2474	13987	55.19	12.69	0.95
190	SLD 9	-500	-1276	10481	16.82	-13.28	-0.42
190	SLD 10	-500	-1276	10481	16.82	-13.28	-0.42
190	SLD 11	-639	-2558	15067	57.04	-5.14	0.5
190	SLD 12	-639	-2558	15067	57.04	-5.14	0.5
190	SLD 13	-390	-1823	13346	33.05	-31.24	-0.62
190	SLD 14	-390	-1823	13346	33.05	-31.24	-0.62
190	SLD 15	-432	-2208	14722	45.11	-28.8	-0.34
190	SLD 16	-432	-2208	14722	45.11	-28.8	-0.34
190	SLV 1	-1118	-1091	6390	14.54	66.4	1.69
190	SLV 2	-1118	-1091	6390	14.54	66.4	1.69
190	SLV 3	-1218	-1998	9643	42.92	72.14	2.35
190	SLV 4	-1218	-1998	9643	42.92	72.14	2.35
190	SLV 5	-630	-265	5548	-13.47	11.01	-0.3
190	SLV 6	-630	-265	5548	-13.47	11.01	-0.3
190	SLV 7	-963	-3287	16389	81.12	30.15	1.89
190	SLV 8	-963	-3287	16389	81.12	30.15	1.89
190	SLV 9	-312	-463	8079	-9.11	-30.73	-1.35
190	SLV 10	-312	-463	8079	-9.11	-30.73	-1.35
190	SLV 11	-645	-3485	18920	85.49	-11.59	0.84
190	SLV 12	-645	-3485	18920	85.49	-11.59	0.84
190	SLV 13	-57	-1752	14825	29.09	-72.72	-1.81
190	SLV 14	-57	-1752	14825	29.09	-72.72	-1.81
190	SLV 15	-157	-2658	18078	57.47	-66.98	-1.16
190	SLV 16	-157	-2658	18078	57.47	-66.98	-1.16
191	SLU 1	-763	-3	2978	1.3	-8.76	0.24
191	SLU 2	-781	-3	3045	1.4	-8.93	0.25
191	SLU 3	-782	-4	3058	1.36	-8.85	0.25
191	SLU 4	-793	-4	3099	1.42	-8.96	0.26
191	SLU 5	-791	-3	3091	1.44	-8.93	0.26
191	SLU 6	-792	-4	3104	1.41	-8.86	0.26
191	SLU 7	-803	-4	3145	1.47	-8.96	0.27
191	SLU 8	-783	-4	3069	1.39	-8.76	0.26
191	SLU 9	-794	-4	3110	1.45	-8.87	0.27
191	SLU 10	-919	-1	3574	1.37	-10.61	0.23
191	SLU 11	-920	-2	3587	1.34	-10.53	0.23
191	SLU 12	-931	-2	3628	1.4	-10.63	0.24
191	SLU 13	-929	-1	3620	1.42	-10.61	0.24
191	SLU 14	-930	-2	3633	1.38	-10.53	0.24
191	SLU 15	-941	-2	3674	1.45	-10.64	0.25
191	SLU 16	-921	-2	3598	1.36	-10.43	0.23
191	SLU 17	-932	-2	3639	1.43	-10.54	0.24
191	SLU 18	-960	0	3733	1.26	-11.15	0.2
191	SLU 19	-971	0	3774	1.32	-11.26	0.21
191	SLU 20	-970	-1	3779	1.31	-11.15	0.21
191	SLU 21	-981	-1	3820	1.37	-11.26	0.22
191	SLU 22	-884	-3	3447	1.45	-10.18	0.27
191	SLU 23	-902	-3	3514	1.56	-10.36	0.28
191	SLU 24	-903	-4	3527	1.52	-10.28	0.28
191	SLU 25	-914	-4	3568	1.58	-10.38	0.29
191	SLU 26	-912	-4	3560	1.6	-10.36	0.29
191	SLU 27	-913	-4	3573	1.56	-10.28	0.29
191	SLU 28	-924	-4	3614	1.63	-10.39	0.3
191	SLU 29	-904	-4	3538	1.55	-10.18	0.29
191	SLU 30	-915	-4	3579	1.61	-10.29	0.29
191	SLU 31	-1040	-1	4043	1.53	-12.03	0.26
191	SLU 32	-1041	-2	4056	1.5	-11.95	0.26
191	SLU 33	-1052	-2	4097	1.56	-12.06	0.27
191	SLU 34	-1050	-2	4089	1.58	-12.03	0.27
191	SLU 35	-1051	-2	4102	1.54	-11.95	0.27
191	SLU 36	-1062	-2	4143	1.6	-12.06	0.28
191	SLU 37	-1042	-2	4067	1.52	-11.86	0.26
191	SLU 38	-1053	-2	4108	1.58	-11.96	0.27
191	SLU 39	-1081	-1	4202	1.42	-12.57	0.23
191	SLU 40	-1092	-1	4243	1.48	-12.68	0.24
191	SLU 41	-1091	-1	4248	1.47	-12.57	0.24

Nodo	Cont.	Reazione a traslazione			Reazione a rotazione		
Ind.	N.br.	x	y	z	x	y	z
191	SLU 42	-1102	-1	4289	1.53	-12.68	0.25
191	SLU 43	-950	-4	3710	1.63	-10.9	0.3
191	SLU 44	-968	-4	3777	1.73	-11.07	0.32
191	SLU 45	-969	-4	3791	1.7	-10.99	0.31
191	SLU 46	-980	-4	3831	1.76	-11.1	0.32
191	SLU 47	-979	-4	3823	1.78	-11.07	0.33
191	SLU 48	-980	-5	3837	1.74	-10.99	0.32
191	SLU 49	-990	-5	3877	1.8	-11.1	0.33
191	SLU 50	-971	-5	3802	1.72	-10.9	0.32
191	SLU 51	-982	-5	3842	1.78	-11	0.33
191	SLU 52	-1106	-2	4306	1.71	-12.75	0.29
191	SLU 53	-1107	-2	4320	1.67	-12.67	0.29
191	SLU 54	-1118	-2	4360	1.73	-12.77	0.3
191	SLU 55	-1116	-2	4352	1.76	-12.75	0.3
191	SLU 56	-1117	-3	4366	1.72	-12.67	0.3
191	SLU 57	-1128	-3	4406	1.78	-12.77	0.31
191	SLU 58	-1109	-3	4331	1.7	-12.57	0.3
191	SLU 59	-1119	-3	4371	1.76	-12.68	0.31
191	SLU 60	-1147	-1	4466	1.6	-13.29	0.27
191	SLU 61	-1158	-1	4506	1.66	-13.39	0.28
191	SLU 62	-1158	-2	4511	1.64	-13.29	0.28
191	SLU 63	-1168	-2	4552	1.7	-13.4	0.29
191	SLU 64	-1072	-4	4179	1.79	-12.32	0.33
191	SLU 65	-1089	-4	4247	1.89	-12.5	0.34
191	SLU 66	-1091	-5	4260	1.85	-12.42	0.34
191	SLU 67	-1101	-5	4300	1.91	-12.52	0.35
191	SLU 68	-1100	-5	4292	1.94	-12.5	0.35
191	SLU 69	-1101	-5	4306	1.9	-12.42	0.35
191	SLU 70	-1111	-5	4346	1.96	-12.52	0.36
191	SLU 71	-1092	-5	4271	1.88	-12.32	0.35
191	SLU 72	-1103	-5	4311	1.94	-12.43	0.36
191	SLU 73	-1227	-2	4776	1.87	-14.17	0.32
191	SLU 74	-1228	-3	4789	1.83	-14.09	0.32
191	SLU 75	-1239	-3	4829	1.89	-14.2	0.33
191	SLU 76	-1237	-3	4821	1.91	-14.17	0.33
191	SLU 77	-1239	-3	4835	1.88	-14.09	0.33
191	SLU 78	-1249	-3	4875	1.94	-14.2	0.34
191	SLU 79	-1230	-3	4800	1.86	-14	0.32
191	SLU 80	-1240	-3	4840	1.92	-14.1	0.33
191	SLU 81	-1268	-1	4935	1.75	-14.71	0.29
191	SLU 82	-1279	-1	4975	1.82	-14.82	0.3
191	SLU 83	-1279	-2	4981	1.8	-14.71	0.3
191	SLU 84	-1289	-2	5021	1.86	-14.82	0.31
191	SLE RA 1	-798	-3	3112	1.34	-9.16	0.25
191	SLE RA 2	-810	-3	3157	1.41	-9.28	0.26
191	SLE RA 3	-810	-4	3165	1.38	-9.23	0.25
191	SLE RA 4	-817	-4	3192	1.43	-9.3	0.26
191	SLE RA 5	-816	-3	3187	1.44	-9.28	0.26
191	SLE RA 6	-817	-4	3196	1.41	-9.23	0.26
191	SLE RA 7	-824	-4	3223	1.46	-9.3	0.27
191	SLE RA 8	-811	-4	3173	1.4	-9.17	0.26
191	SLE RA 9	-818	-4	3200	1.44	-9.24	0.27
191	SLE RA 10	-901	-2	3509	1.39	-10.4	0.24
191	SLE RA 11	-902	-2	3518	1.37	-10.34	0.24
191	SLE RA 12	-909	-2	3545	1.41	-10.42	0.25
191	SLE RA 13	-908	-2	3540	1.42	-10.4	0.25
191	SLE RA 14	-909	-2	3549	1.4	-10.35	0.25
191	SLE RA 15	-916	-2	3576	1.44	-10.42	0.25
191	SLE RA 16	-903	-2	3525	1.39	-10.28	0.24
191	SLE RA 17	-910	-2	3552	1.43	-10.35	0.25
191	SLE RA 18	-929	-1	3615	1.32	-10.76	0.22
191	SLE RA 19	-936	-1	3642	1.36	-10.83	0.23
191	SLE RA 20	-936	-2	3646	1.35	-10.76	0.23
191	SLE RA 21	-943	-2	3673	1.39	-10.83	0.24
191	SLE FR 1	-798	-3	3112	1.34	-9.16	0.25
191	SLE FR 2	-800	-3	3121	1.35	-9.19	0.25
191	SLE FR 3	-800	-3	3124	1.35	-9.16	0.25
191	SLE FR 4	-839	-3	3272	1.35	-9.67	0.24
191	SLE FR 5	-840	-3	3275	1.35	-9.64	0.24
191	SLE FR 6	-863	-2	3363	1.33	-9.96	0.23
191	SLE QP 1	-798	-3	3112	1.34	-9.16	0.25
191	SLE QP 2	-837	-3	3263	1.33	-9.64	0.24
191	SLD 1	-486	-25	2104	2.76	-1.39	0.63
191	SLD 2	-486	-25	2104	2.76	-1.39	0.63
191	SLD 3	-570	-19	2418	3.35	-2.5	0.77
191	SLD 4	-570	-19	2418	3.35	-2.5	0.77
191	SLD 5	-603	-18	2440	0.87	-5.48	0.14
191	SLD 6	-603	-18	2440	0.87	-5.48	0.14
191	SLD 7	-885	1	3485	2.83	-9.18	0.62
191	SLD 8	-885	1	3485	2.83	-9.18	0.62
191	SLD 9	-789	-7	3041	-0.16	-10.1	-0.14
191	SLD 10	-789	-7	3041	-0.16	-10.1	-0.14
191	SLD 11	-1071	12	4086	1.8	-13.8	0.34
191	SLD 12	-1071	12	4086	1.8	-13.8	0.34
191	SLD 13	-1104	13	4108	-0.68	-16.79	-0.3
191	SLD 14	-1104	13	4108	-0.68	-16.79	-0.3
191	SLD 15	-1188	19	4421	-0.09	-17.9	-0.15
191	SLD 16	-1188	19	4421	-0.09	-17.9	-0.15
191	SLV 1	-14	-54	547	4.67	9.69	1.16
191	SLV 2	-14	-54	547	4.67	9.69	1.16

Nodo	Cont.	Reazione a traslazione			Reazione a rotazione		
Ind.	N.br.	x	y	z	x	y	z
191	SLV 3	-213	-41	1288	6.05	7.07	1.49
191	SLV 4	-213	-41	1288	6.05	7.07	1.49
191	SLV 5	-287	-38	1324	0.26	0.12	0.01
191	SLV 6	-287	-38	1324	0.26	0.12	0.01
191	SLV 7	-953	6	3794	4.83	-8.59	1.12
191	SLV 8	-953	6	3794	4.83	-8.59	1.12
191	SLV 9	-721	-12	2732	-2.16	-10.69	-0.64
191	SLV 10	-721	-12	2732	-2.16	-10.69	-0.64
191	SLV 11	-1387	33	5201	2.41	-19.4	0.47
191	SLV 12	-1387	33	5201	2.41	-19.4	0.47
191	SLV 13	-1461	35	5238	-3.38	-26.36	-1.02
191	SLV 14	-1461	35	5238	-3.38	-26.36	-1.02
191	SLV 15	-1661	49	5978	-2.01	-28.97	-0.68
191	SLV 16	-1661	49	5978	-2.01	-28.97	-0.68
192	SLU 1	342	-4	2026	0.29	-0.28	-0.09
192	SLU 2	344	-4	2040	0.29	-0.23	-0.09
192	SLU 3	354	-4	2099	0.3	-0.2	-0.09
192	SLU 4	356	-4	2108	0.3	-0.17	-0.09
192	SLU 5	353	-4	2094	0.3	-0.13	-0.09
192	SLU 6	363	-4	2152	0.31	-0.09	-0.1
192	SLU 7	365	-4	2161	0.31	-0.07	-0.09
192	SLU 8	360	-4	2132	0.31	-0.07	-0.1
192	SLU 9	361	-4	2141	0.31	-0.04	-0.09
192	SLU 10	401	-4	2375	0.31	-0.34	-0.1
192	SLU 11	411	-4	2434	0.32	-0.31	-0.1
192	SLU 12	412	-4	2443	0.32	-0.28	-0.1
192	SLU 13	410	-4	2428	0.31	-0.24	-0.1
192	SLU 14	420	-4	2487	0.33	-0.2	-0.1
192	SLU 15	421	-4	2496	0.32	-0.18	-0.1
192	SLU 16	416	-4	2467	0.32	-0.18	-0.1
192	SLU 17	418	-4	2476	0.32	-0.15	-0.1
192	SLU 18	422	-4	2504	0.31	-0.43	-0.1
192	SLU 19	424	-4	2513	0.31	-0.41	-0.1
192	SLU 20	431	-4	2557	0.32	-0.33	-0.1
192	SLU 21	433	-4	2566	0.32	-0.3	-0.1
192	SLU 22	393	-4	2327	0.32	-0.35	-0.1
192	SLU 23	395	-4	2341	0.32	-0.31	-0.1
192	SLU 24	405	-4	2400	0.33	-0.27	-0.1
192	SLU 25	406	-4	2409	0.33	-0.24	-0.1
192	SLU 26	404	-4	2394	0.33	-0.2	-0.1
192	SLU 27	414	-5	2453	0.34	-0.17	-0.11
192	SLU 28	415	-4	2462	0.34	-0.14	-0.11
192	SLU 29	410	-4	2433	0.34	-0.14	-0.11
192	SLU 30	412	-4	2442	0.34	-0.11	-0.11
192	SLU 31	451	-5	2676	0.33	-0.41	-0.11
192	SLU 32	461	-5	2735	0.34	-0.38	-0.11
192	SLU 33	463	-5	2744	0.34	-0.35	-0.11
192	SLU 34	460	-5	2729	0.34	-0.31	-0.11
192	SLU 35	470	-5	2788	0.35	-0.27	-0.12
192	SLU 36	472	-5	2797	0.35	-0.25	-0.11
192	SLU 37	467	-5	2768	0.35	-0.25	-0.11
192	SLU 38	468	-5	2777	0.35	-0.22	-0.11
192	SLU 39	473	-5	2805	0.34	-0.5	-0.11
192	SLU 40	475	-5	2814	0.34	-0.48	-0.11
192	SLU 41	482	-5	2858	0.35	-0.4	-0.12
192	SLU 42	484	-5	2867	0.35	-0.37	-0.11
192	SLU 43	427	-5	2530	0.37	-0.34	-0.11
192	SLU 44	429	-4	2545	0.37	-0.29	-0.11
192	SLU 45	439	-5	2603	0.38	-0.26	-0.12
192	SLU 46	441	-5	2612	0.38	-0.23	-0.11
192	SLU 47	438	-5	2598	0.38	-0.19	-0.11
192	SLU 48	448	-5	2656	0.39	-0.15	-0.12
192	SLU 49	450	-5	2665	0.39	-0.13	-0.12
192	SLU 50	445	-5	2636	0.39	-0.13	-0.12
192	SLU 51	446	-5	2645	0.39	-0.1	-0.12
192	SLU 52	486	-5	2880	0.39	-0.4	-0.12
192	SLU 53	496	-5	2938	0.4	-0.37	-0.12
192	SLU 54	497	-5	2947	0.4	-0.34	-0.12
192	SLU 55	495	-5	2933	0.39	-0.3	-0.12
192	SLU 56	505	-5	2991	0.4	-0.26	-0.13
192	SLU 57	506	-5	3000	0.4	-0.23	-0.13
192	SLU 58	501	-5	2971	0.4	-0.24	-0.13
192	SLU 59	503	-5	2980	0.4	-0.21	-0.13
192	SLU 60	508	-5	3009	0.39	-0.49	-0.12
192	SLU 61	509	-5	3018	0.39	-0.46	-0.12
192	SLU 62	516	-5	3062	0.4	-0.39	-0.13
192	SLU 63	518	-5	3071	0.4	-0.36	-0.13
192	SLU 64	478	-5	2831	0.4	-0.41	-0.12
192	SLU 65	480	-5	2846	0.4	-0.36	-0.12
192	SLU 66	490	-5	2904	0.41	-0.33	-0.13
192	SLU 67	492	-5	2913	0.41	-0.3	-0.13
192	SLU 68	489	-5	2899	0.41	-0.26	-0.12
192	SLU 69	499	-5	2957	0.42	-0.22	-0.13
192	SLU 70	501	-5	2966	0.42	-0.2	-0.13
192	SLU 71	496	-5	2937	0.42	-0.2	-0.13
192	SLU 72	497	-5	2946	0.41	-0.17	-0.13
192	SLU 73	537	-5	3181	0.41	-0.47	-0.13
192	SLU 74	546	-6	3239	0.42	-0.44	-0.14
192	SLU 75	548	-6	3248	0.42	-0.41	-0.13
192	SLU 76	546	-6	3234	0.42	-0.37	-0.13

Nodo	Cont.	Reazione a traslazione			Reazione a rotazione		
Ind.	N.br.	x	y	z	x	y	z
192	SLU 77	555	-6	3292	0.43	-0.33	-0.14
192	SLU 78	557	-6	3301	0.43	-0.31	-0.14
192	SLU 79	552	-6	3272	0.43	-0.31	-0.14
192	SLU 80	554	-6	3281	0.43	-0.28	-0.14
192	SLU 81	558	-6	3310	0.42	-0.56	-0.13
192	SLU 82	560	-6	3319	0.42	-0.54	-0.13
192	SLU 83	567	-6	3363	0.43	-0.46	-0.14
192	SLU 84	569	-6	3372	0.43	-0.43	-0.14
192	SLE RA 1	356	-4	2112	0.3	-0.3	-0.09
192	SLE RA 2	358	-4	2122	0.3	-0.27	-0.09
192	SLE RA 3	365	-4	2161	0.31	-0.25	-0.09
192	SLE RA 4	366	-4	2166	0.31	-0.23	-0.09
192	SLE RA 5	364	-4	2157	0.31	-0.2	-0.09
192	SLE RA 6	371	-4	2196	0.31	-0.18	-0.1
192	SLE RA 7	372	-4	2202	0.31	-0.16	-0.1
192	SLE RA 8	368	-4	2182	0.31	-0.16	-0.1
192	SLE RA 9	369	-4	2188	0.31	-0.14	-0.1
192	SLE RA 10	396	-4	2345	0.31	-0.34	-0.1
192	SLE RA 11	402	-4	2384	0.32	-0.32	-0.1
192	SLE RA 12	403	-4	2390	0.32	-0.3	-0.1
192	SLE RA 13	402	-4	2380	0.32	-0.27	-0.1
192	SLE RA 14	408	-4	2419	0.32	-0.25	-0.1
192	SLE RA 15	409	-4	2425	0.32	-0.23	-0.1
192	SLE RA 16	406	-4	2406	0.32	-0.23	-0.1
192	SLE RA 17	407	-4	2412	0.32	-0.21	-0.1
192	SLE RA 18	410	-4	2431	0.32	-0.4	-0.1
192	SLE RA 19	411	-4	2437	0.31	-0.38	-0.1
192	SLE RA 20	416	-4	2466	0.32	-0.33	-0.1
192	SLE RA 21	417	-4	2472	0.32	-0.31	-0.1
192	SLE FR 1	356	-4	2112	0.3	-0.3	-0.09
192	SLE FR 2	357	-4	2114	0.3	-0.29	-0.09
192	SLE FR 3	359	-4	2126	0.3	-0.27	-0.09
192	SLE FR 4	373	-4	2209	0.31	-0.32	-0.09
192	SLE FR 5	375	-4	2222	0.31	-0.3	-0.1
192	SLE FR 6	383	-4	2271	0.31	-0.35	-0.1
192	SLE QP 1	356	-4	2112	0.3	-0.3	-0.09
192	SLE QP 2	372	-4	2207	0.31	-0.33	-0.09
192	SLD 1	426	-21	2539	1.04	5.62	-0.4
192	SLD 2	426	-21	2539	1.04	5.62	-0.4
192	SLD 3	445	-18	2641	0.87	5.23	-0.35
192	SLD 4	445	-18	2641	0.87	5.23	-0.35
192	SLD 5	360	-13	2151	0.79	2.06	-0.27
192	SLD 6	360	-13	2151	0.79	2.06	-0.27
192	SLD 7	422	-4	2493	0.21	0.74	-0.09
192	SLD 8	422	-4	2493	0.21	0.74	-0.09
192	SLD 9	323	-4	1922	0.4	-1.4	-0.1
192	SLD 10	323	-4	1922	0.4	-1.4	-0.1
192	SLD 11	385	6	2264	-0.18	-2.71	0.08
192	SLD 12	385	6	2264	-0.18	-2.71	0.08
192	SLD 13	300	10	1774	-0.26	-5.89	0.16
192	SLD 14	300	10	1774	-0.26	-5.89	0.16
192	SLD 15	319	13	1876	-0.43	-6.28	0.22
192	SLD 16	319	13	1876	-0.43	-6.28	0.22
192	SLV 1	498	-44	2979	2.03	13.61	-0.82
192	SLV 2	498	-44	2979	2.03	13.61	-0.82
192	SLV 3	542	-37	3227	1.62	12.68	-0.69
192	SLV 4	542	-37	3227	1.62	12.68	-0.69
192	SLV 5	342	-26	2064	1.44	5.26	-0.51
192	SLV 6	342	-26	2064	1.44	5.26	-0.51
192	SLV 7	491	-4	2889	0.08	2.16	-0.08
192	SLV 8	491	-4	2889	0.08	2.16	-0.08
192	SLV 9	254	-4	1526	0.53	-2.82	-0.11
192	SLV 10	254	-4	1526	0.53	-2.82	-0.11
192	SLV 11	403	18	2351	-0.83	-5.92	0.32
192	SLV 12	403	18	2351	-0.83	-5.92	0.32
192	SLV 13	203	29	1188	-1.01	-13.34	0.5
192	SLV 14	203	29	1188	-1.01	-13.34	0.5
192	SLV 15	247	36	1436	-1.42	-14.27	0.63
192	SLV 16	247	36	1436	-1.42	-14.27	0.63
194	SLU 1	-372	-440	3897	2.7	257.1	66.03
194	SLU 2	-374	-443	3918	2.74	258.76	66.47
194	SLU 3	-384	-453	4020	2.74	265.62	68.06
194	SLU 4	-385	-455	4033	2.75	266.62	68.33
194	SLU 5	-381	-452	4000	2.76	264.69	67.88
194	SLU 6	-391	-462	4103	2.75	271.55	69.47
194	SLU 7	-392	-464	4116	2.77	272.55	69.73
194	SLU 8	-387	-458	4061	2.74	268.96	68.84
194	SLU 9	-388	-460	4074	2.76	269.96	69.1
194	SLU 10	-435	-502	4546	2.65	298.89	75.39
194	SLU 11	-445	-512	4648	2.65	305.74	76.98
194	SLU 12	-446	-514	4661	2.66	306.74	77.24
194	SLU 13	-443	-511	4628	2.67	304.82	76.79
194	SLU 14	-452	-522	4730	2.66	311.67	78.38
194	SLU 15	-454	-523	4743	2.68	312.67	78.65
194	SLU 16	-448	-517	4689	2.65	309.08	77.75
194	SLU 17	-449	-519	4702	2.67	310.08	78.02
194	SLU 18	-460	-524	4793	2.58	314.42	78.77
194	SLU 19	-461	-526	4806	2.59	315.42	79.03
194	SLU 20	-467	-534	4876	2.59	320.35	80.17
194	SLU 21	-468	-535	4889	2.61	321.34	80.43

Nodo	Cont.	Reazione a traslazione			Reazione a rotazione		
Ind.	N.br.	x	y	z	x	y	z
194	SLU 22	-427	-498	4465	2.79	293.92	74.72
194	SLU 23	-429	-501	4486	2.82	295.58	75.16
194	SLU 24	-439	-511	4588	2.82	302.43	76.75
194	SLU 25	-440	-513	4601	2.84	303.43	77.01
194	SLU 26	-436	-510	4569	2.84	301.51	76.56
194	SLU 27	-446	-520	4671	2.84	308.36	78.15
194	SLU 28	-447	-522	4684	2.86	309.36	78.42
194	SLU 29	-442	-516	4630	2.83	305.77	77.52
194	SLU 30	-443	-518	4643	2.85	306.77	77.79
194	SLU 31	-490	-560	5114	2.73	335.7	84.07
194	SLU 32	-500	-570	5216	2.73	342.55	85.66
194	SLU 33	-501	-572	5229	2.75	343.55	85.93
194	SLU 34	-498	-569	5196	2.75	341.63	85.48
194	SLU 35	-508	-579	5299	2.75	348.48	87.07
194	SLU 36	-509	-581	5311	2.77	349.48	87.33
194	SLU 37	-503	-575	5257	2.74	345.9	86.44
194	SLU 38	-505	-577	5270	2.76	346.89	86.7
194	SLU 39	-515	-582	5361	2.66	351.23	87.45
194	SLU 40	-516	-584	5374	2.68	352.23	87.72
194	SLU 41	-522	-591	5444	2.68	357.16	88.85
194	SLU 42	-523	-593	5457	2.7	358.16	89.12
194	SLU 43	-465	-552	4871	3.48	321.61	82.86
194	SLU 44	-467	-555	4892	3.52	323.27	83.31
194	SLU 45	-476	-565	4994	3.52	330.13	84.9
194	SLU 46	-477	-567	5007	3.54	331.12	85.16
194	SLU 47	-474	-564	4975	3.54	329.2	84.71
194	SLU 48	-484	-575	5077	3.54	336.05	86.3
194	SLU 49	-485	-577	5090	3.55	337.05	86.56
194	SLU 50	-480	-570	5036	3.52	333.47	85.67
194	SLU 51	-481	-572	5048	3.54	334.47	85.93
194	SLU 52	-528	-614	5520	3.43	363.39	92.22
194	SLU 53	-538	-625	5622	3.43	370.25	93.81
194	SLU 54	-539	-626	5635	3.45	371.25	94.08
194	SLU 55	-535	-624	5602	3.45	369.32	93.62
194	SLU 56	-545	-634	5704	3.45	376.18	95.21
194	SLU 57	-546	-636	5717	3.46	377.17	95.48
194	SLU 58	-541	-630	5663	3.43	373.59	94.58
194	SLU 59	-542	-631	5676	3.45	374.59	94.85
194	SLU 60	-552	-637	5767	3.36	378.92	95.6
194	SLU 61	-553	-638	5780	3.38	379.92	95.86
194	SLU 62	-560	-646	5850	3.38	384.85	97
194	SLU 63	-561	-648	5863	3.39	385.85	97.27
194	SLU 64	-520	-610	5439	3.57	358.42	91.55
194	SLU 65	-522	-613	5460	3.61	360.09	91.99
194	SLU 66	-531	-623	5563	3.6	366.94	93.58
194	SLU 67	-533	-625	5575	3.62	367.94	93.85
194	SLU 68	-529	-622	5543	3.62	366.02	93.39
194	SLU 69	-539	-632	5645	3.62	372.87	94.98
194	SLU 70	-540	-634	5658	3.64	373.87	95.25
194	SLU 71	-535	-628	5604	3.61	370.28	94.35
194	SLU 72	-536	-630	5617	3.63	371.28	94.62
194	SLU 73	-583	-672	6088	3.52	400.21	100.91
194	SLU 74	-593	-682	6190	3.51	407.06	102.5
194	SLU 75	-594	-684	6203	3.53	408.06	102.76
194	SLU 76	-591	-681	6171	3.53	406.14	102.31
194	SLU 77	-600	-691	6273	3.53	412.99	103.9
194	SLU 78	-601	-693	6286	3.55	413.99	104.16
194	SLU 79	-596	-687	6231	3.52	410.4	103.27
194	SLU 80	-597	-689	6244	3.54	411.4	103.53
194	SLU 81	-608	-694	6336	3.44	415.74	104.28
194	SLU 82	-609	-696	6348	3.46	416.74	104.55
194	SLU 83	-615	-703	6418	3.46	421.67	105.69
194	SLU 84	-616	-705	6431	3.48	422.67	105.95
194	SLE RA 1	-388	-456	4059	2.73	267.62	68.51
194	SLE RA 2	-389	-458	4073	2.75	268.73	68.81
194	SLE RA 3	-395	-465	4141	2.75	273.3	69.87
194	SLE RA 4	-396	-467	4150	2.76	273.96	70.05
194	SLE RA 5	-394	-465	4128	2.76	272.68	69.74
194	SLE RA 6	-400	-471	4196	2.76	277.25	70.8
194	SLE RA 7	-401	-473	4205	2.78	277.92	70.98
194	SLE RA 8	-398	-469	4169	2.75	275.52	70.38
194	SLE RA 9	-398	-470	4177	2.77	276.19	70.56
194	SLE RA 10	-430	-498	4492	2.69	295.48	74.75
194	SLE RA 11	-436	-505	4560	2.69	300.04	75.81
194	SLE RA 12	-437	-506	4568	2.7	300.71	75.99
194	SLE RA 13	-435	-504	4547	2.7	299.43	75.69
194	SLE RA 14	-441	-511	4615	2.7	304	76.75
194	SLE RA 15	-442	-512	4623	2.72	304.66	76.92
194	SLE RA 16	-439	-508	4587	2.69	302.27	76.33
194	SLE RA 17	-439	-509	4596	2.71	302.94	76.5
194	SLE RA 18	-446	-513	4657	2.64	305.83	77
194	SLE RA 19	-447	-514	4665	2.66	306.5	77.18
194	SLE RA 20	-451	-519	4712	2.66	309.78	77.94
194	SLE RA 21	-452	-520	4720	2.67	310.45	78.12
194	SLE FR 1	-388	-456	4059	2.73	267.62	68.51
194	SLE FR 2	-388	-457	4062	2.73	267.84	68.57
194	SLE FR 3	-390	-459	4081	2.73	269.2	68.89
194	SLE FR 4	-406	-474	4241	2.71	279.3	71.12
194	SLE FR 5	-407	-476	4260	2.71	280.66	71.43
194	SLE FR 6	-417	-485	4358	2.69	286.72	72.76

Nodo	Cont.	Reazione a traslazione			Reazione a rotazione		
Ind.	N.br.	x	y	z	x	y	z
194	SLE QP 1	-388	-456	4059	2.73	267.62	68.51
194	SLE QP 2	-405	-473	4238	2.7	279.08	71.06
194	SLD 1	-350	-456	3910	0.62	285.25	68.78
194	SLD 2	-350	-456	3910	0.62	285.25	68.78
194	SLD 3	-372	-526	4171	2.67	305.79	79.15
194	SLD 4	-372	-526	4171	2.67	305.79	79.15
194	SLD 5	-355	-362	3744	-1.04	249.77	54.65
194	SLD 6	-355	-362	3744	-1.04	249.77	54.65
194	SLD 7	-429	-596	4614	5.81	318.25	89.22
194	SLD 8	-429	-596	4614	5.81	318.25	89.22
194	SLD 9	-381	-351	3862	-0.41	239.91	52.9
194	SLD 10	-381	-351	3862	-0.41	239.91	52.9
194	SLD 11	-456	-585	4733	6.45	308.39	87.47
194	SLD 12	-456	-585	4733	6.45	308.39	87.47
194	SLD 13	-438	-420	4305	2.73	252.37	62.97
194	SLD 14	-438	-420	4305	2.73	252.37	62.97
194	SLD 15	-461	-490	4566	4.79	272.92	73.34
194	SLD 16	-461	-490	4566	4.79	272.92	73.34
194	SLV 1	-275	-433	3464	-2.19	293.2	65.67
194	SLV 2	-275	-433	3464	-2.19	293.2	65.67
194	SLV 3	-329	-598	4085	2.64	341.89	90.05
194	SLV 4	-329	-598	4085	2.64	341.89	90.05
194	SLV 5	-286	-210	3065	-6.09	209.48	32.47
194	SLV 6	-286	-210	3065	-6.09	209.48	32.47
194	SLV 7	-463	-761	5134	10.01	371.77	113.73
194	SLV 8	-463	-761	5134	10.01	371.77	113.73
194	SLV 9	-348	-185	3343	-4.6	186.4	28.39
194	SLV 10	-348	-185	3343	-4.6	186.4	28.39
194	SLV 11	-525	-736	5412	11.5	348.69	109.65
194	SLV 12	-525	-736	5412	11.5	348.69	109.65
194	SLV 13	-482	-349	4391	2.77	216.27	52.07
194	SLV 14	-482	-349	4391	2.77	216.27	52.07
194	SLV 15	-535	-514	5012	7.6	264.96	76.45
194	SLV 16	-535	-514	5012	7.6	264.96	76.45
196	SLU 1	849	-1032	6976	17.63	771.54	6.9
196	SLU 2	862	-1121	7251	20.66	789.46	7.14
196	SLU 3	882	-1064	7235	17.95	801.85	7.21
196	SLU 4	890	-1118	7400	19.77	812.6	7.36
196	SLU 5	890	-1143	7445	20.84	813.46	7.35
196	SLU 6	910	-1086	7430	18.13	825.85	7.42
196	SLU 7	918	-1139	7595	19.95	836.6	7.57
196	SLU 8	905	-1075	7365	17.99	819.54	7.32
196	SLU 9	913	-1129	7530	19.81	830.3	7.46
196	SLU 10	1018	-1285	8449	23.12	926.11	7.72
196	SLU 11	1038	-1228	8434	20.41	938.49	7.79
196	SLU 12	1046	-1282	8599	22.23	949.25	7.94
196	SLU 13	1046	-1307	8644	23.3	950.11	7.93
196	SLU 14	1066	-1250	8628	20.59	962.5	8
196	SLU 15	1075	-1303	8793	22.41	973.25	8.15
196	SLU 16	1061	-1239	8563	20.45	956.19	7.9
196	SLU 17	1069	-1293	8728	22.27	966.94	8.04
196	SLU 18	1072	-1266	8688	21.15	966.75	7.73
196	SLU 19	1080	-1320	8853	22.96	977.5	7.87
196	SLU 20	1100	-1288	8882	21.33	990.75	7.94
196	SLU 21	1108	-1342	9047	23.14	1001.5	8.08
196	SLU 22	987	-1166	8022	19.3	893.33	7.88
196	SLU 23	1001	-1255	8297	22.33	911.26	8.12
196	SLU 24	1021	-1199	8282	19.62	923.64	8.19
196	SLU 25	1029	-1252	8447	21.44	934.4	8.33
196	SLU 26	1029	-1277	8492	22.51	935.26	8.33
196	SLU 27	1049	-1220	8476	19.8	947.64	8.4
196	SLU 28	1057	-1274	8641	21.62	958.4	8.54
196	SLU 29	1043	-1210	8411	19.66	941.34	8.3
196	SLU 30	1051	-1263	8576	21.48	952.09	8.44
196	SLU 31	1157	-1419	9496	24.79	1047.9	8.7
196	SLU 32	1177	-1363	9480	22.08	1060.29	8.77
196	SLU 33	1185	-1416	9645	23.9	1071.04	8.91
196	SLU 34	1185	-1441	9690	24.97	1071.91	8.91
196	SLU 35	1205	-1384	9674	22.26	1084.29	8.98
196	SLU 36	1213	-1438	9839	24.08	1095.04	9.12
196	SLU 37	1200	-1374	9609	22.12	1077.99	8.88
196	SLU 38	1208	-1427	9774	23.94	1088.74	9.02
196	SLU 39	1211	-1401	9734	22.81	1088.54	8.71
196	SLU 40	1219	-1454	9899	24.63	1099.3	8.85
196	SLU 41	1239	-1422	9928	22.99	1112.55	8.92
196	SLU 42	1247	-1476	10093	24.81	1123.3	9.06
196	SLU 43	1056	-1296	8710	22.35	961.24	8.64
196	SLU 44	1069	-1385	8985	25.38	979.17	8.88
196	SLU 45	1089	-1328	8970	22.67	991.55	8.95
196	SLU 46	1097	-1381	9135	24.49	1002.3	9.09
196	SLU 47	1097	-1406	9180	25.56	1003.17	9.09
196	SLU 48	1117	-1350	9164	22.85	1015.55	9.16
196	SLU 49	1125	-1403	9329	24.67	1026.31	9.3
196	SLU 50	1112	-1339	9099	22.71	1009.25	9.06
196	SLU 51	1120	-1392	9264	24.53	1020	9.2
196	SLU 52	1225	-1549	10184	27.84	1115.81	9.46
196	SLU 53	1245	-1492	10168	25.13	1128.2	9.53
196	SLU 54	1254	-1545	10333	26.95	1138.95	9.67
196	SLU 55	1253	-1570	10378	28.02	1139.81	9.67
196	SLU 56	1273	-1514	10362	25.31	1152.2	9.74

Nodo	Cont.	Reazione a traslazione			Reazione a rotazione		
Ind.	N.br.	x	y	z	x	y	z
196	SLU 57	1282	-1567	10527	27.13	1162.95	9.88
196	SLU 58	1268	-1503	10297	25.17	1145.89	9.64
196	SLU 59	1276	-1556	10462	26.99	1156.65	9.78
196	SLU 60	1279	-1530	10422	25.86	1156.45	9.47
196	SLU 61	1287	-1583	10587	27.68	1167.21	9.61
196	SLU 62	1307	-1552	10616	26.04	1180.45	9.67
196	SLU 63	1315	-1605	10781	27.86	1191.21	9.82
196	SLU 64	1194	-1430	9757	24.02	1083.04	9.62
196	SLU 65	1208	-1519	10031	27.05	1100.96	9.85
196	SLU 66	1228	-1462	10016	24.34	1113.35	9.93
196	SLU 67	1236	-1516	10181	26.16	1124.1	10.07
196	SLU 68	1236	-1541	10226	27.23	1124.96	10.06
196	SLU 69	1256	-1484	10210	24.52	1137.35	10.14
196	SLU 70	1264	-1537	10375	26.34	1148.1	10.28
196	SLU 71	1250	-1473	10145	24.38	1131.04	10.03
196	SLU 72	1258	-1527	10310	26.19	1141.8	10.18
196	SLU 73	1364	-1683	11230	29.51	1237.61	10.43
196	SLU 74	1384	-1626	11214	26.8	1249.99	10.51
196	SLU 75	1392	-1680	11379	28.62	1260.75	10.65
196	SLU 76	1392	-1705	11424	29.69	1261.61	10.64
196	SLU 77	1412	-1648	11408	26.98	1273.99	10.71
196	SLU 78	1420	-1701	11573	28.8	1284.75	10.86
196	SLU 79	1407	-1637	11343	26.84	1267.69	10.61
196	SLU 80	1415	-1691	11508	28.65	1278.44	10.76
196	SLU 81	1418	-1664	11468	27.53	1278.25	10.44
196	SLU 82	1426	-1718	11633	29.35	1289	10.59
196	SLU 83	1446	-1686	11663	27.71	1302.25	10.65
196	SLU 84	1454	-1739	11827	29.53	1313	10.79
196	SLE RA 1	888	-1070	7275	18.11	806.34	7.18
196	SLE RA 2	897	-1130	7458	20.13	818.29	7.34
196	SLE RA 3	910	-1092	7448	18.32	826.54	7.39
196	SLE RA 4	916	-1128	7558	19.53	833.71	7.48
196	SLE RA 5	916	-1144	7588	20.25	834.29	7.48
196	SLE RA 6	929	-1106	7577	18.44	842.55	7.53
196	SLE RA 7	935	-1142	7687	19.65	849.71	7.62
196	SLE RA 8	925	-1099	7534	18.35	838.34	7.46
196	SLE RA 9	931	-1135	7644	19.56	845.51	7.56
196	SLE RA 10	1001	-1239	8257	21.77	909.38	7.73
196	SLE RA 11	1015	-1201	8247	19.96	917.64	7.77
196	SLE RA 12	1020	-1237	8357	21.17	924.81	7.87
196	SLE RA 13	1020	-1254	8387	21.89	925.39	7.87
196	SLE RA 14	1033	-1216	8376	20.08	933.64	7.91
196	SLE RA 15	1039	-1251	8486	21.29	940.81	8.01
196	SLE RA 16	1030	-1209	8333	19.99	929.44	7.85
196	SLE RA 17	1035	-1244	8443	21.2	936.61	7.94
196	SLE RA 18	1037	-1227	8416	20.45	936.48	7.73
196	SLE RA 19	1042	-1262	8526	21.66	943.65	7.83
196	SLE RA 20	1056	-1241	8546	20.57	952.48	7.87
196	SLE RA 21	1061	-1277	8656	21.78	959.65	7.97
196	SLE FR 1	888	-1070	7275	18.11	806.34	7.18
196	SLE FR 2	890	-1082	7312	18.51	808.73	7.21
196	SLE FR 3	896	-1076	7327	18.16	812.74	7.24
196	SLE FR 4	935	-1129	7654	19.21	847.77	7.38
196	SLE FR 5	940	-1123	7669	18.86	851.78	7.4
196	SLE FR 6	963	-1149	7846	19.28	871.41	7.46
196	SLE QP 1	888	-1070	7275	18.11	806.34	7.18
196	SLE QP 2	933	-1117	7617	18.81	845.38	7.35
196	SLD 1	1540	-1085	9479	9.81	1224.56	2.28
196	SLD 2	1540	-1085	9479	9.81	1224.56	2.28
196	SLD 3	1584	-1381	10333	20	1276.76	3.22
196	SLD 4	1584	-1381	10333	20	1276.76	3.22
196	SLD 5	1050	-658	6880	0.66	879.95	4.39
196	SLD 6	1050	-658	6880	0.66	879.95	4.39
196	SLD 7	1193	-1646	9728	34.61	1053.97	7.55
196	SLD 8	1193	-1646	9728	34.61	1053.97	7.55
196	SLD 9	672	-588	5507	3.01	636.79	7.15
196	SLD 10	672	-588	5507	3.01	636.79	7.15
196	SLD 11	816	-1577	8354	36.96	810.81	10.31
196	SLD 12	816	-1577	8354	36.96	810.81	10.31
196	SLD 13	282	-853	4902	17.62	414	11.47
196	SLD 14	282	-853	4902	17.62	414	11.47
196	SLD 15	325	-1150	5756	27.81	466.2	12.42
196	SLD 16	325	-1150	5756	27.81	466.2	12.42
196	SLV 1	2353	-1041	11965	-2.41	1731.53	-4.57
196	SLV 2	2353	-1041	11965	-2.41	1731.53	-4.57
196	SLV 3	2457	-1742	13994	21.59	1856.9	-2.26
196	SLV 4	2457	-1742	13994	21.59	1856.9	-2.26
196	SLV 5	1201	-33	5846	-23.96	921.08	0.26
196	SLV 6	1201	-33	5846	-23.96	921.08	0.26
196	SLV 7	1548	-2367	12607	56.05	1338.98	7.97
196	SLV 8	1548	-2367	12607	56.05	1338.98	7.97
196	SLV 9	318	132	2628	-18.43	351.78	6.72
196	SLV 10	318	132	2628	-18.43	351.78	6.72
196	SLV 11	665	-2202	9389	61.58	769.68	14.43
196	SLV 12	665	-2202	9389	61.58	769.68	14.43
196	SLV 13	-592	-493	1241	16.03	-166.14	16.96
196	SLV 14	-592	-493	1241	16.03	-166.14	16.96
196	SLV 15	-488	-1193	3270	40.03	-40.77	19.27
196	SLV 16	-488	-1193	3270	40.03	-40.77	19.27
197	SLU 1	391	-16	5569	1.2	11.42	-0.35

Nodo	Cont.	Reazione a traslazione			Reazione a rotazione		
Ind.	N.br.	x	y	z	x	y	z
197	SLU 2	367	-17	5688	1.49	9.75	-0.35
197	SLU 3	407	-17	5780	1.22	12.08	-0.36
197	SLU 4	393	-17	5851	1.39	11.08	-0.37
197	SLU 5	384	-17	5848	1.49	10.55	-0.36
197	SLU 6	424	-17	5940	1.23	12.88	-0.38
197	SLU 7	410	-18	6012	1.4	11.88	-0.38
197	SLU 8	425	-17	5890	1.22	13.02	-0.37
197	SLU 9	411	-18	5961	1.39	12.01	-0.37
197	SLU 10	451	-21	6668	1.71	12.51	-0.41
197	SLU 11	491	-21	6760	1.44	14.84	-0.43
197	SLU 12	477	-21	6831	1.61	13.84	-0.43
197	SLU 13	468	-21	6828	1.71	13.31	-0.42
197	SLU 14	508	-21	6920	1.45	15.64	-0.44
197	SLU 15	493	-21	6991	1.62	14.64	-0.44
197	SLU 16	509	-21	6870	1.44	15.77	-0.43
197	SLU 17	494	-21	6941	1.61	14.77	-0.44
197	SLU 18	511	-21	6969	1.52	15.36	-0.44
197	SLU 19	496	-22	7040	1.69	14.36	-0.44
197	SLU 20	528	-22	7129	1.53	16.16	-0.45
197	SLU 21	513	-22	7201	1.7	15.16	-0.45
197	SLU 22	468	-19	6441	1.31	14.13	-0.41
197	SLU 23	444	-20	6559	1.6	12.46	-0.41
197	SLU 24	484	-20	6651	1.33	14.8	-0.42
197	SLU 25	469	-20	6723	1.5	13.79	-0.42
197	SLU 26	461	-20	6720	1.61	13.26	-0.42
197	SLU 27	501	-20	6812	1.34	15.59	-0.43
197	SLU 28	486	-20	6883	1.51	14.59	-0.44
197	SLU 29	502	-20	6762	1.33	15.73	-0.43
197	SLU 30	487	-20	6833	1.5	14.73	-0.43
197	SLU 31	528	-23	7539	1.82	15.22	-0.47
197	SLU 32	568	-23	7631	1.55	17.55	-0.49
197	SLU 33	553	-24	7702	1.72	16.55	-0.49
197	SLU 34	544	-24	7700	1.83	16.02	-0.48
197	SLU 35	585	-24	7792	1.56	18.35	-0.5
197	SLU 36	570	-24	7863	1.73	17.35	-0.5
197	SLU 37	585	-23	7741	1.55	18.49	-0.49
197	SLU 38	571	-24	7813	1.72	17.48	-0.5
197	SLU 39	587	-24	7840	1.63	18.07	-0.5
197	SLU 40	573	-25	7912	1.8	17.07	-0.5
197	SLU 41	604	-25	8001	1.64	18.87	-0.51
197	SLU 42	590	-25	8072	1.81	17.87	-0.51
197	SLU 43	482	-20	6941	1.52	13.92	-0.43
197	SLU 44	458	-21	7060	1.81	12.25	-0.43
197	SLU 45	498	-21	7152	1.54	14.58	-0.45
197	SLU 46	484	-21	7223	1.71	13.58	-0.45
197	SLU 47	475	-21	7220	1.82	13.05	-0.45
197	SLU 48	515	-21	7312	1.55	15.38	-0.46
197	SLU 49	501	-22	7384	1.72	14.38	-0.46
197	SLU 50	516	-21	7262	1.54	15.51	-0.45
197	SLU 51	502	-22	7333	1.71	14.51	-0.46
197	SLU 52	542	-25	8040	2.03	15.01	-0.5
197	SLU 53	582	-25	8132	1.76	17.34	-0.51
197	SLU 54	568	-25	8203	1.93	16.34	-0.51
197	SLU 55	559	-25	8200	2.04	15.8	-0.51
197	SLU 56	599	-25	8292	1.77	18.14	-0.52
197	SLU 57	585	-25	8363	1.94	17.13	-0.52
197	SLU 58	600	-25	8242	1.76	18.27	-0.52
197	SLU 59	585	-25	8313	1.93	17.27	-0.52
197	SLU 60	602	-25	8341	1.84	17.86	-0.52
197	SLU 61	587	-26	8412	2.01	16.85	-0.52
197	SLU 62	619	-26	8501	1.85	18.65	-0.53
197	SLU 63	604	-26	8572	2.02	17.65	-0.54
197	SLU 64	559	-23	7812	1.64	16.63	-0.49
197	SLU 65	535	-24	7931	1.92	14.96	-0.49
197	SLU 66	575	-24	8023	1.65	17.29	-0.51
197	SLU 67	560	-24	8095	1.82	16.29	-0.51
197	SLU 68	552	-24	8092	1.93	15.76	-0.5
197	SLU 69	592	-24	8184	1.66	18.09	-0.52
197	SLU 70	577	-24	8255	1.83	17.09	-0.52
197	SLU 71	593	-24	8133	1.65	18.23	-0.51
197	SLU 72	578	-24	8205	1.82	17.22	-0.52
197	SLU 73	619	-27	8911	2.14	17.72	-0.56
197	SLU 74	659	-27	9003	1.87	20.05	-0.57
197	SLU 75	644	-28	9074	2.04	19.05	-0.57
197	SLU 76	635	-28	9072	2.15	18.51	-0.57
197	SLU 77	676	-28	9164	1.88	20.85	-0.58
197	SLU 78	661	-28	9235	2.05	19.85	-0.58
197	SLU 79	676	-27	9113	1.87	20.98	-0.58
197	SLU 80	662	-28	9185	2.04	19.98	-0.58
197	SLU 81	678	-28	9212	1.95	20.57	-0.58
197	SLU 82	664	-29	9283	2.12	19.57	-0.58
197	SLU 83	695	-29	9373	1.96	21.37	-0.59
197	SLU 84	681	-29	9444	2.13	20.36	-0.59
197	SLE RA 1	413	-17	5818	1.23	12.2	-0.36
197	SLE RA 2	397	-18	5897	1.42	11.08	-0.37
197	SLE RA 3	424	-18	5959	1.25	12.64	-0.38
197	SLE RA 4	414	-18	6006	1.36	11.97	-0.38
197	SLE RA 5	408	-18	6004	1.43	11.62	-0.37
197	SLE RA 6	435	-18	6066	1.25	13.17	-0.38
197	SLE RA 7	425	-18	6113	1.36	12.5	-0.38

Nodo	Cont.	Reazione a traslazione			Reazione a rotazione		
Ind.	N.br.	x	y	z	x	y	z
197	SLE RA 8	436	-18	6032	1.25	13.26	-0.38
197	SLE RA 9	426	-18	6080	1.36	12.59	-0.38
197	SLE RA 10	453	-20	6550	1.57	12.92	-0.41
197	SLE RA 11	480	-20	6612	1.39	14.48	-0.42
197	SLE RA 12	470	-20	6659	1.51	13.81	-0.42
197	SLE RA 13	464	-20	6657	1.58	13.45	-0.42
197	SLE RA 14	491	-20	6719	1.4	15.01	-0.43
197	SLE RA 15	481	-20	6766	1.51	14.34	-0.43
197	SLE RA 16	491	-20	6685	1.39	15.1	-0.42
197	SLE RA 17	482	-20	6733	1.51	14.43	-0.42
197	SLE RA 18	493	-21	6751	1.44	14.82	-0.43
197	SLE RA 19	483	-21	6799	1.56	14.15	-0.43
197	SLE RA 20	504	-21	6858	1.45	15.35	-0.43
197	SLE RA 21	494	-21	6906	1.56	14.69	-0.43
197	SLE FR 1	413	-17	5818	1.23	12.2	-0.36
197	SLE FR 2	410	-17	5834	1.27	11.97	-0.37
197	SLE FR 3	417	-17	5861	1.24	12.41	-0.37
197	SLE FR 4	434	-18	6114	1.33	12.76	-0.38
197	SLE FR 5	441	-18	6141	1.3	13.2	-0.39
197	SLE FR 6	453	-19	6285	1.34	13.51	-0.4
197	SLE QP 1	413	-17	5818	1.23	12.2	-0.36
197	SLE QP 2	437	-18	6098	1.3	12.98	-0.38
197	SLD 1	1188	-23	7899	1.3	57.16	-0.39
197	SLD 2	1188	-23	7899	1.3	57.16	-0.39
197	SLD 3	1097	-25	8265	2.4	50.32	-0.33
197	SLD 4	1097	-25	8265	2.4	50.32	-0.33
197	SLD 5	801	-17	6082	-0.36	36.62	-0.47
197	SLD 6	801	-17	6082	-0.36	36.62	-0.47
197	SLD 7	496	-23	7304	3.29	13.8	-0.28
197	SLD 8	496	-23	7304	3.29	13.8	-0.28
197	SLD 9	378	-13	4892	-0.69	12.16	-0.48
197	SLD 10	378	-13	4892	-0.69	12.16	-0.48
197	SLD 11	72	-19	6114	2.96	-10.65	-0.3
197	SLD 12	72	-19	6114	2.96	-10.65	-0.3
197	SLD 13	-223	-11	3931	0.19	-24.35	-0.43
197	SLD 14	-223	-11	3931	0.19	-24.35	-0.43
197	SLD 15	-315	-13	4297	1.29	-31.19	-0.38
197	SLD 16	-315	-13	4297	1.29	-31.19	-0.38
197	SLV 1	2196	-30	10304	1.32	116.37	-0.4
197	SLV 2	2196	-30	10304	1.32	116.37	-0.4
197	SLV 3	1980	-35	11184	3.88	100.27	-0.27
197	SLV 4	1980	-35	11184	3.88	100.27	-0.27
197	SLV 5	1292	-15	6024	-2.58	68.42	-0.59
197	SLV 6	1292	-15	6024	-2.58	68.42	-0.59
197	SLV 7	573	-30	8959	5.95	14.75	-0.15
197	SLV 8	573	-30	8959	5.95	14.75	-0.15
197	SLV 9	301	-7	3237	-3.36	11.22	-0.62
197	SLV 10	301	-7	3237	-3.36	11.22	-0.62
197	SLV 11	-418	-21	6172	5.17	-42.45	-0.18
197	SLV 12	-418	-21	6172	5.17	-42.45	-0.18
197	SLV 13	-1106	-2	1012	-1.28	-74.3	-0.5
197	SLV 14	-1106	-2	1012	-1.28	-74.3	-0.5
197	SLV 15	-1322	-6	1892	1.27	-90.41	-0.37
197	SLV 16	-1322	-6	1892	1.27	-90.41	-0.37
198	SLU 1	127	3	5119	-8.18	5.08	0.04
198	SLU 2	99	3	5186	-8.01	4.35	0.03
198	SLU 3	135	3	5302	-8.6	5.37	0.04
198	SLU 4	117	3	5343	-8.5	4.93	0.04
198	SLU 5	111	3	5321	-8.3	4.8	0.04
198	SLU 6	147	3	5438	-8.89	5.81	0.04
198	SLU 7	130	3	5478	-8.79	5.37	0.04
198	SLU 8	152	3	5390	-8.76	5.97	0.04
198	SLU 9	135	3	5430	-8.66	5.53	0.04
198	SLU 10	136	2	6097	-9.15	5.71	0.03
198	SLU 11	172	3	6214	-9.74	6.73	0.04
198	SLU 12	155	3	6254	-9.64	6.29	0.03
198	SLU 13	149	2	6233	-9.45	6.15	0.03
198	SLU 14	185	3	6349	-10.04	7.17	0.04
198	SLU 15	168	3	6390	-9.94	6.73	0.04
198	SLU 16	190	3	6301	-9.91	7.33	0.04
198	SLU 17	173	3	6341	-9.81	6.89	0.04
198	SLU 18	181	2	6421	-9.81	7.03	0.03
198	SLU 19	164	2	6461	-9.71	6.59	0.03
198	SLU 20	194	2	6556	-10.11	7.47	0.04
198	SLU 21	176	2	6597	-10	7.03	0.03
198	SLU 22	164	3	5928	-9.58	6.36	0.05
198	SLU 23	135	3	5995	-9.41	5.63	0.04
198	SLU 24	171	4	6111	-10	6.65	0.05
198	SLU 25	154	4	6152	-9.9	6.21	0.05
198	SLU 26	147	3	6130	-9.7	6.07	0.04
198	SLU 27	183	4	6247	-10.29	7.09	0.05
198	SLU 28	166	4	6287	-10.19	6.65	0.05
198	SLU 29	188	4	6199	-10.17	7.25	0.05
198	SLU 30	171	4	6239	-10.07	6.81	0.05
198	SLU 31	173	3	6906	-10.55	6.99	0.04
198	SLU 32	209	3	7023	-11.15	8.01	0.04
198	SLU 33	191	3	7063	-11.04	7.57	0.04
198	SLU 34	185	3	7042	-10.85	7.43	0.04
198	SLU 35	221	3	7158	-11.44	8.45	0.05
198	SLU 36	204	3	7199	-11.34	8.01	0.04

Nodo	Cont.	Reazione a traslazione			Reazione a rotazione		
Ind.	N.br.	x	y	z	x	y	z
198	SLU 37	226	3	7110	-11.31	8.61	0.05
198	SLU 38	209	3	7150	-11.21	8.17	0.04
198	SLU 39	217	3	7230	-11.21	8.31	0.04
198	SLU 40	200	2	7270	-11.11	7.87	0.04
198	SLU 41	230	3	7365	-11.51	8.75	0.04
198	SLU 42	213	3	7406	-11.41	8.31	0.04
198	SLU 43	153	4	6377	-10.15	6.17	0.05
198	SLU 44	124	4	6444	-9.98	5.44	0.04
198	SLU 45	160	4	6561	-10.57	6.46	0.05
198	SLU 46	143	4	6601	-10.47	6.02	0.05
198	SLU 47	137	4	6580	-10.27	5.88	0.05
198	SLU 48	173	4	6696	-10.86	6.9	0.05
198	SLU 49	156	4	6736	-10.76	6.46	0.05
198	SLU 50	178	4	6648	-10.74	7.06	0.05
198	SLU 51	161	4	6688	-10.64	6.62	0.05
198	SLU 52	162	3	7356	-11.12	6.8	0.04
198	SLU 53	198	3	7472	-11.71	7.82	0.05
198	SLU 54	181	3	7512	-11.61	7.38	0.04
198	SLU 55	175	3	7491	-11.42	7.24	0.04
198	SLU 56	211	4	7607	-12.01	8.26	0.05
198	SLU 57	193	4	7648	-11.91	7.82	0.05
198	SLU 58	216	4	7559	-11.88	8.42	0.05
198	SLU 59	199	3	7600	-11.78	7.98	0.05
198	SLU 60	207	3	7679	-11.78	8.11	0.04
198	SLU 61	190	3	7719	-11.68	7.67	0.04
198	SLU 62	220	3	7814	-12.08	8.56	0.04
198	SLU 63	202	3	7855	-11.98	8.12	0.04
198	SLU 64	189	4	7186	-11.55	7.45	0.05
198	SLU 65	161	4	7253	-11.38	6.72	0.05
198	SLU 66	197	4	7370	-11.97	7.73	0.06
198	SLU 67	179	4	7410	-11.87	7.3	0.05
198	SLU 68	173	4	7389	-11.68	7.16	0.05
198	SLU 69	209	5	7505	-12.27	8.18	0.06
198	SLU 70	192	5	7545	-12.16	7.74	0.06
198	SLU 71	214	5	7457	-12.14	8.34	0.06
198	SLU 72	197	4	7497	-12.04	7.9	0.06
198	SLU 73	198	4	8165	-12.53	8.08	0.05
198	SLU 74	234	4	8281	-13.12	9.09	0.05
198	SLU 75	217	4	8321	-13.02	8.66	0.05
198	SLU 76	211	4	8300	-12.82	8.52	0.05
198	SLU 77	247	4	8416	-13.41	9.54	0.06
198	SLU 78	230	4	8457	-13.31	9.1	0.05
198	SLU 79	252	4	8368	-13.28	9.69	0.06
198	SLU 80	235	4	8409	-13.18	9.26	0.05
198	SLU 81	243	3	8488	-13.19	9.39	0.05
198	SLU 82	226	3	8528	-13.08	8.95	0.05
198	SLU 83	256	3	8623	-13.48	9.84	0.05
198	SLU 84	238	3	8664	-13.38	9.4	0.05
198	SLE RA 1	138	3	5350	-8.58	5.45	0.04
198	SLE RA 2	119	3	5395	-8.46	4.96	0.04
198	SLE RA 3	143	3	5472	-8.86	5.64	0.04
198	SLE RA 4	131	3	5499	-8.79	5.35	0.04
198	SLE RA 5	127	3	5485	-8.66	5.26	0.04
198	SLE RA 6	151	3	5563	-9.05	5.93	0.04
198	SLE RA 7	139	3	5590	-8.99	5.64	0.04
198	SLE RA 8	154	3	5530	-8.97	6.04	0.04
198	SLE RA 9	143	3	5557	-8.9	5.75	0.04
198	SLE RA 10	144	3	6002	-9.23	5.87	0.03
198	SLE RA 11	168	3	6080	-9.62	6.55	0.04
198	SLE RA 12	156	3	6107	-9.55	6.25	0.04
198	SLE RA 13	152	3	6093	-9.42	6.16	0.04
198	SLE RA 14	176	3	6170	-9.82	6.84	0.04
198	SLE RA 15	165	3	6197	-9.75	6.55	0.04
198	SLE RA 16	179	3	6138	-9.73	6.95	0.04
198	SLE RA 17	168	3	6165	-9.67	6.65	0.04
198	SLE RA 18	174	3	6218	-9.67	6.74	0.04
198	SLE RA 19	162	3	6245	-9.6	6.45	0.03
198	SLE RA 20	182	3	6308	-9.86	7.04	0.04
198	SLE RA 21	170	3	6335	-9.8	6.75	0.04
198	SLE FR 1	138	3	5350	-8.58	5.45	0.04
198	SLE FR 2	134	3	5359	-8.55	5.35	0.04
198	SLE FR 3	141	3	5386	-8.65	5.57	0.04
198	SLE FR 4	145	3	5619	-8.88	5.74	0.04
198	SLE FR 5	152	3	5646	-8.98	5.96	0.04
198	SLE FR 6	156	3	5784	-9.12	6.1	0.04
198	SLE QP 1	138	3	5350	-8.58	5.45	0.04
198	SLE QP 2	148	3	5610	-8.9	5.84	0.04
198	SLD 1	1122	-5	6595	-7.07	38.01	-0.04
198	SLD 2	1122	-5	6595	-7.07	38.01	-0.04
198	SLD 3	1017	-8	6844	-5.3	35.13	-0.07
198	SLD 4	1017	-8	6844	-5.3	35.13	-0.07
198	SLD 5	600	4	5528	-11.05	19.86	0.07
198	SLD 6	600	4	5528	-11.05	19.86	0.07
198	SLD 7	250	-4	6358	-5.13	10.26	-0.04
198	SLD 8	250	-4	6358	-5.13	10.26	-0.04
198	SLD 9	47	10	4863	-12.68	1.42	0.12
198	SLD 10	47	10	4863	-12.68	1.42	0.12
198	SLD 11	-303	2	5692	-6.76	-8.18	0.01
198	SLD 12	-303	2	5692	-6.76	-8.18	0.01
198	SLD 13	-720	14	4377	-12.51	-23.45	0.15

Nodo	Cont.	Reazione a traslazione			Reazione a rotazione		
Ind.	N.br.	x	y	z	x	y	z
198	SLD 14	-720	14	4377	-12.51	-23.45	0.15
198	SLD 15	-825	11	4625	-10.73	-26.33	0.12
198	SLD 16	-825	11	4625	-10.73	-26.33	0.12
198	SLV 1	2427	-17	7907	-4.6	81.12	-0.15
198	SLV 2	2427	-17	7907	-4.6	81.12	-0.15
198	SLV 3	2179	-23	8509	-0.47	74.33	-0.22
198	SLV 4	2179	-23	8509	-0.47	74.33	-0.22
198	SLV 5	1208	6	5386	-13.88	38.73	0.1
198	SLV 6	1208	6	5386	-13.88	38.73	0.1
198	SLV 7	382	-14	7394	-0.1	16.08	-0.15
198	SLV 8	382	-14	7394	-0.1	16.08	-0.15
198	SLV 9	-85	20	3827	-17.7	-4.41	0.23
198	SLV 10	-85	20	3827	-17.7	-4.41	0.23
198	SLV 11	-911	0	5835	-3.92	-27.05	-0.02
198	SLV 12	-911	0	5835	-3.92	-27.05	-0.02
198	SLV 13	-1882	29	2711	-17.34	-62.65	0.3
198	SLV 14	-1882	29	2711	-17.34	-62.65	0.3
198	SLV 15	-2130	23	3313	-13.2	-69.45	0.23
198	SLV 16	-2130	23	3313	-13.2	-69.45	0.23
199	SLU 1	-84	20	4961	-17.96	-2.51	0.18
199	SLU 2	-113	19	4999	-17.81	-3.34	0.18
199	SLU 3	-84	21	5130	-18.84	-2.49	0.19
199	SLU 4	-101	21	5153	-18.76	-2.99	0.19
199	SLU 5	-106	20	5122	-18.43	-3.11	0.18
199	SLU 6	-76	21	5253	-19.46	-2.26	0.19
199	SLU 7	-94	21	5275	-19.38	-2.76	0.19
199	SLU 8	-68	21	5206	-19.2	-2.05	0.19
199	SLU 9	-86	21	5229	-19.11	-2.54	0.19
199	SLU 10	-115	22	5895	-20.7	-3.45	0.2
199	SLU 11	-86	23	6027	-21.74	-2.6	0.21
199	SLU 12	-104	23	6049	-21.65	-3.1	0.21
199	SLU 13	-108	23	6018	-21.32	-3.22	0.21
199	SLU 14	-78	24	6149	-22.35	-2.37	0.22
199	SLU 15	-96	24	6172	-22.27	-2.87	0.22
199	SLU 16	-70	24	6102	-22.09	-2.16	0.22
199	SLU 17	-88	24	6125	-22	-2.66	0.22
199	SLU 18	-87	24	6242	-22.09	-2.67	0.22
199	SLU 19	-105	24	6264	-22	-3.17	0.21
199	SLU 20	-79	24	6364	-22.71	-2.44	0.22
199	SLU 21	-97	24	6387	-22.62	-2.94	0.22
199	SLU 22	-83	23	5753	-21.04	-2.51	0.21
199	SLU 23	-113	23	5791	-20.89	-3.34	0.21
199	SLU 24	-83	24	5922	-21.92	-2.49	0.22
199	SLU 25	-101	24	5945	-21.83	-2.99	0.22
199	SLU 26	-105	23	5914	-21.51	-3.11	0.21
199	SLU 27	-75	25	6045	-22.54	-2.26	0.22
199	SLU 28	-93	24	6067	-22.45	-2.75	0.22
199	SLU 29	-68	24	5998	-22.28	-2.05	0.22
199	SLU 30	-85	24	6021	-22.19	-2.54	0.22
199	SLU 31	-115	26	6687	-23.78	-3.45	0.23
199	SLU 32	-85	27	6819	-24.81	-2.6	0.24
199	SLU 33	-103	27	6841	-24.73	-3.1	0.24
199	SLU 34	-107	26	6810	-24.4	-3.22	0.24
199	SLU 35	-77	27	6941	-25.43	-2.37	0.25
199	SLU 36	-95	27	6964	-25.35	-2.87	0.25
199	SLU 37	-70	27	6894	-25.17	-2.16	0.25
199	SLU 38	-87	27	6917	-25.08	-2.65	0.25
199	SLU 39	-86	27	7034	-25.17	-2.67	0.25
199	SLU 40	-104	27	7056	-25.08	-3.17	0.24
199	SLU 41	-78	28	7156	-25.79	-2.44	0.25
199	SLU 42	-96	28	7179	-25.7	-2.94	0.25
199	SLU 43	-109	24	6178	-22.29	-3.27	0.22
199	SLU 44	-139	24	6216	-22.14	-4.09	0.22
199	SLU 45	-109	25	6347	-23.17	-3.25	0.23
199	SLU 46	-127	25	6370	-23.09	-3.74	0.23
199	SLU 47	-131	25	6338	-22.76	-3.86	0.23
199	SLU 48	-101	26	6470	-23.79	-3.01	0.24
199	SLU 49	-119	26	6492	-23.71	-3.51	0.24
199	SLU 50	-94	26	6423	-23.53	-2.8	0.23
199	SLU 51	-112	26	6446	-23.44	-3.3	0.23
199	SLU 52	-141	27	7112	-25.04	-4.21	0.25
199	SLU 53	-111	28	7243	-26.07	-3.36	0.26
199	SLU 54	-129	28	7266	-25.98	-3.86	0.26
199	SLU 55	-133	28	7235	-25.66	-3.97	0.25
199	SLU 56	-104	29	7366	-26.69	-3.12	0.26
199	SLU 57	-121	29	7388	-26.6	-3.62	0.26
199	SLU 58	-96	29	7319	-26.42	-2.91	0.26
199	SLU 59	-114	28	7342	-26.33	-3.41	0.26
199	SLU 60	-112	28	7458	-26.42	-3.43	0.26
199	SLU 61	-130	28	7481	-26.33	-3.92	0.26
199	SLU 62	-104	29	7581	-27.04	-3.19	0.26
199	SLU 63	-122	29	7604	-26.95	-3.69	0.26
199	SLU 64	-108	28	6970	-25.37	-3.27	0.25
199	SLU 65	-138	28	7008	-25.22	-4.09	0.25
199	SLU 66	-108	29	7139	-26.25	-3.24	0.26
199	SLU 67	-126	29	7162	-26.17	-3.74	0.26
199	SLU 68	-130	28	7130	-25.84	-3.86	0.26
199	SLU 69	-101	29	7262	-26.87	-3.01	0.27
199	SLU 70	-118	29	7284	-26.79	-3.51	0.27
199	SLU 71	-93	29	7215	-26.61	-2.8	0.26

Nodo	Cont.	Reazione a traslazione			Reazione a rotazione		
Ind.	N.br.	x	y	z	x	y	z
199	SLU 72	-111	29	7238	-26.52	-3.3	0.26
199	SLU 73	-140	30	7904	-28.11	-4.21	0.28
199	SLU 74	-110	31	8035	-29.15	-3.36	0.29
199	SLU 75	-128	31	8058	-29.06	-3.85	0.29
199	SLU 76	-132	31	8027	-28.73	-3.97	0.28
199	SLU 77	-103	32	8158	-29.77	-3.12	0.29
199	SLU 78	-121	32	8180	-29.68	-3.62	0.29
199	SLU 79	-95	32	8111	-29.5	-2.91	0.29
199	SLU 80	-113	32	8134	-29.41	-3.41	0.29
199	SLU 81	-111	32	8250	-29.5	-3.43	0.29
199	SLU 82	-129	32	8273	-29.41	-3.92	0.29
199	SLU 83	-104	32	8373	-30.12	-3.19	0.29
199	SLU 84	-121	32	8396	-30.03	-3.69	0.29
199	SLE RA 1	-83	21	5188	-18.84	-2.51	0.19
199	SLE RA 2	-103	20	5213	-18.74	-3.06	0.19
199	SLE RA 3	-83	21	5300	-19.43	-2.5	0.19
199	SLE RA 4	-95	21	5315	-19.37	-2.83	0.19
199	SLE RA 5	-98	21	5294	-19.15	-2.91	0.19
199	SLE RA 6	-78	22	5382	-19.84	-2.34	0.2
199	SLE RA 7	-90	22	5397	-19.78	-2.67	0.2
199	SLE RA 8	-73	21	5351	-19.66	-2.2	0.2
199	SLE RA 9	-85	21	5366	-19.61	-2.53	0.19
199	SLE RA 10	-105	22	5810	-20.67	-3.14	0.2
199	SLE RA 11	-85	23	5898	-21.36	-2.57	0.21
199	SLE RA 12	-97	23	5913	-21.3	-2.9	0.21
199	SLE RA 13	-100	23	5892	-21.08	-2.98	0.21
199	SLE RA 14	-80	24	5979	-21.77	-2.42	0.21
199	SLE RA 15	-92	23	5994	-21.71	-2.75	0.21
199	SLE RA 16	-75	23	5948	-21.59	-2.28	0.21
199	SLE RA 17	-87	23	5963	-21.53	-2.61	0.21
199	SLE RA 18	-85	23	6041	-21.59	-2.62	0.21
199	SLE RA 19	-97	23	6056	-21.53	-2.95	0.21
199	SLE RA 20	-80	24	6123	-22	-2.46	0.22
199	SLE RA 21	-92	24	6138	-21.95	-2.8	0.22
199	SLE FR 1	-83	21	5188	-18.84	-2.51	0.19
199	SLE FR 2	-87	21	5193	-18.82	-2.62	0.19
199	SLE FR 3	-81	21	5220	-19	-2.45	0.19
199	SLE FR 4	-88	21	5449	-19.64	-2.65	0.19
199	SLE FR 5	-82	22	5476	-19.83	-2.48	0.2
199	SLE FR 6	-84	22	5614	-20.21	-2.57	0.2
199	SLE QP 1	-83	21	5188	-18.84	-2.51	0.19
199	SLE QP 2	-84	21	5444	-19.66	-2.54	0.19
199	SLD 1	927	29	6052	-23.92	26.26	0.26
199	SLD 2	927	29	6052	-23.92	26.26	0.26
199	SLD 3	830	26	6249	-20.78	23.39	0.23
199	SLD 4	830	26	6249	-20.78	23.39	0.23
199	SLD 5	365	28	5327	-25.7	10.44	0.26
199	SLD 6	365	28	5327	-25.7	10.44	0.26
199	SLD 7	44	18	5985	-15.24	0.89	0.16
199	SLD 8	44	18	5985	-15.24	0.89	0.16
199	SLD 9	-212	25	4903	-24.09	-5.98	0.23
199	SLD 10	-212	25	4903	-24.09	-5.98	0.23
199	SLD 11	-533	14	5561	-13.62	-15.53	0.13
199	SLD 12	-533	14	5561	-13.62	-15.53	0.13
199	SLD 13	-998	17	4638	-18.54	-28.48	0.16
199	SLD 14	-998	17	4638	-18.54	-28.48	0.16
199	SLD 15	-1095	14	4836	-15.4	-31.35	0.13
199	SLD 16	-1095	14	4836	-15.4	-31.35	0.13
199	SLV 1	2281	39	6859	-29.64	64.87	0.35
199	SLV 2	2281	39	6859	-29.64	64.87	0.35
199	SLV 3	2054	31	7339	-22.29	58.1	0.28
199	SLV 4	2054	31	7339	-22.29	58.1	0.28
199	SLV 5	971	38	5139	-33.81	27.95	0.34
199	SLV 6	971	38	5139	-33.81	27.95	0.34
199	SLV 7	212	13	6741	-9.29	5.38	0.12
199	SLV 8	212	13	6741	-9.29	5.38	0.12
199	SLV 9	-380	30	4146	-30.03	-10.47	0.27
199	SLV 10	-380	30	4146	-30.03	-10.47	0.27
199	SLV 11	-1139	5	5748	-5.51	-33.04	0.05
199	SLV 12	-1139	5	5748	-5.51	-33.04	0.05
199	SLV 13	-2222	11	3548	-17.04	-63.19	0.1
199	SLV 14	-2222	11	3548	-17.04	-63.19	0.1
199	SLV 15	-2449	4	4029	-9.68	-69.96	0.04
199	SLV 16	-2449	4	4029	-9.68	-69.96	0.04
200	SLU 1	-193	33	4772	-26.32	-4.25	0.16
200	SLU 2	-223	32	4784	-26.17	-4.96	0.15
200	SLU 3	-196	34	4926	-27.61	-4.29	0.16
200	SLU 4	-214	34	4934	-27.52	-4.72	0.16
200	SLU 5	-218	33	4894	-27.08	-4.77	0.16
200	SLU 6	-190	35	5037	-28.51	-4.1	0.17
200	SLU 7	-209	35	5044	-28.42	-4.53	0.17
200	SLU 8	-181	35	4993	-28.13	-3.87	0.17
200	SLU 9	-200	35	5000	-28.04	-4.3	0.17
200	SLU 10	-248	38	5658	-30.63	-5.49	0.18
200	SLU 11	-221	40	5801	-32.06	-4.82	0.19
200	SLU 12	-239	39	5808	-31.97	-5.25	0.19
200	SLU 13	-243	39	5769	-31.53	-5.31	0.19
200	SLU 14	-215	41	5912	-32.96	-4.64	0.19
200	SLU 15	-234	41	5919	-32.88	-5.06	0.19
200	SLU 16	-206	40	5867	-32.58	-4.41	0.19

Nodo	Cont.	Reazione a traslazione			Reazione a rotazione		
Ind.	N.br.	x	y	z	x	y	z
200	SLU 17	-225	40	5875	-32.49	-4.84	0.19
200	SLU 18	-228	40	6021	-32.69	-5.01	0.19
200	SLU 19	-247	40	6028	-32.6	-5.44	0.19
200	SLU 20	-223	41	6132	-33.59	-4.82	0.2
200	SLU 21	-241	41	6139	-33.5	-5.25	0.2
200	SLU 22	-212	38	5541	-30.86	-4.65	0.18
200	SLU 23	-243	38	5553	-30.71	-5.36	0.18
200	SLU 24	-215	40	5696	-32.14	-4.69	0.19
200	SLU 25	-234	40	5703	-32.06	-5.12	0.19
200	SLU 26	-237	39	5664	-31.61	-5.17	0.19
200	SLU 27	-210	41	5807	-33.05	-4.51	0.2
200	SLU 28	-228	41	5814	-32.96	-4.93	0.19
200	SLU 29	-201	40	5762	-32.66	-4.28	0.19
200	SLU 30	-219	40	5770	-32.57	-4.7	0.19
200	SLU 31	-268	43	6428	-35.17	-5.89	0.21
200	SLU 32	-240	45	6571	-36.6	-5.23	0.22
200	SLU 33	-259	45	6578	-36.51	-5.65	0.22
200	SLU 34	-262	44	6538	-36.07	-5.71	0.21
200	SLU 35	-235	46	6681	-37.5	-5.04	0.22
200	SLU 36	-253	46	6688	-37.41	-5.47	0.22
200	SLU 37	-226	46	6637	-37.12	-4.81	0.22
200	SLU 38	-244	46	6644	-37.03	-5.24	0.22
200	SLU 39	-248	46	6791	-37.22	-5.41	0.22
200	SLU 40	-266	46	6798	-37.13	-5.84	0.22
200	SLU 41	-242	47	6901	-38.12	-5.23	0.22
200	SLU 42	-260	47	6908	-38.04	-5.65	0.22
200	SLU 43	-244	40	5939	-32.66	-5.38	0.19
200	SLU 44	-275	40	5951	-32.52	-6.09	0.19
200	SLU 45	-247	42	6094	-33.95	-5.43	0.2
200	SLU 46	-266	42	6101	-33.86	-5.85	0.2
200	SLU 47	-269	41	6062	-33.42	-5.91	0.2
200	SLU 48	-242	43	6205	-34.85	-5.24	0.21
200	SLU 49	-260	43	6212	-34.76	-5.67	0.21
200	SLU 50	-233	43	6160	-34.47	-5.01	0.2
200	SLU 51	-251	42	6168	-34.38	-5.44	0.2
200	SLU 52	-299	46	6826	-36.97	-6.63	0.22
200	SLU 53	-272	47	6969	-38.4	-5.96	0.23
200	SLU 54	-291	47	6976	-38.32	-6.39	0.23
200	SLU 55	-294	47	6936	-37.87	-6.44	0.22
200	SLU 56	-266	48	7079	-39.31	-5.77	0.23
200	SLU 57	-285	48	7086	-39.22	-6.2	0.23
200	SLU 58	-257	48	7035	-38.92	-5.55	0.23
200	SLU 59	-276	48	7042	-38.83	-5.97	0.23
200	SLU 60	-279	48	7189	-39.03	-6.15	0.23
200	SLU 61	-298	48	7196	-38.94	-6.57	0.23
200	SLU 62	-274	49	7299	-39.93	-5.96	0.24
200	SLU 63	-292	49	7306	-39.84	-6.39	0.23
200	SLU 64	-263	46	6709	-37.2	-5.79	0.22
200	SLU 65	-294	46	6721	-37.05	-6.5	0.22
200	SLU 66	-267	48	6864	-38.49	-5.83	0.23
200	SLU 67	-285	47	6871	-38.4	-6.25	0.23
200	SLU 68	-288	47	6831	-37.95	-6.31	0.22
200	SLU 69	-261	49	6974	-39.39	-5.64	0.23
200	SLU 70	-279	49	6981	-39.3	-6.07	0.23
200	SLU 71	-252	48	6930	-39	-5.41	0.23
200	SLU 72	-270	48	6937	-38.91	-5.84	0.23
200	SLU 73	-319	51	7595	-41.51	-7.03	0.24
200	SLU 74	-291	53	7738	-42.94	-6.36	0.25
200	SLU 75	-310	53	7746	-42.85	-6.79	0.25
200	SLU 76	-313	52	7706	-42.41	-6.84	0.25
200	SLU 77	-286	54	7849	-43.84	-6.18	0.26
200	SLU 78	-304	54	7856	-43.75	-6.6	0.26
200	SLU 79	-277	54	7805	-43.46	-5.95	0.26
200	SLU 80	-295	53	7812	-43.37	-6.37	0.26
200	SLU 81	-299	54	7958	-43.56	-6.55	0.26
200	SLU 82	-317	54	7966	-43.47	-6.97	0.26
200	SLU 83	-293	55	8069	-44.46	-6.36	0.26
200	SLU 84	-311	55	8076	-44.38	-6.79	0.26
200	SLE RA 1	-198	34	4992	-27.62	-4.36	0.16
200	SLE RA 2	-219	34	4999	-27.52	-4.84	0.16
200	SLE RA 3	-200	35	5095	-28.48	-4.39	0.17
200	SLE RA 4	-213	35	5100	-28.42	-4.67	0.17
200	SLE RA 5	-215	35	5073	-28.12	-4.71	0.17
200	SLE RA 6	-197	36	5168	-29.08	-4.27	0.17
200	SLE RA 7	-209	36	5173	-29.02	-4.55	0.17
200	SLE RA 8	-191	36	5139	-28.82	-4.11	0.17
200	SLE RA 9	-203	36	5144	-28.76	-4.4	0.17
200	SLE RA 10	-235	38	5583	-30.49	-5.19	0.18
200	SLE RA 11	-217	39	5678	-31.45	-4.75	0.19
200	SLE RA 12	-229	39	5683	-31.39	-5.03	0.19
200	SLE RA 13	-231	38	5656	-31.09	-5.07	0.18
200	SLE RA 14	-213	40	5752	-32.05	-4.62	0.19
200	SLE RA 15	-226	39	5756	-31.99	-4.91	0.19
200	SLE RA 16	-207	39	5722	-31.79	-4.47	0.19
200	SLE RA 17	-219	39	5727	-31.73	-4.75	0.19
200	SLE RA 18	-222	39	5825	-31.86	-4.87	0.19
200	SLE RA 19	-234	39	5829	-31.8	-5.15	0.19
200	SLE RA 20	-218	40	5898	-32.46	-4.75	0.19
200	SLE RA 21	-230	40	5903	-32.4	-5.03	0.19
200	SLE FR 1	-198	34	4992	-27.62	-4.36	0.16

Nodo	Cont.	Reazione a traslazione			Reazione a rotazione		
Ind.	N.br.	x	y	z	x	y	z
200	SLE FR 2	-202	34	4993	-27.6	-4.46	0.16
200	SLE FR 3	-197	34	5021	-27.86	-4.31	0.16
200	SLE FR 4	-209	36	5243	-28.87	-4.61	0.17
200	SLE FR 5	-204	36	5271	-29.13	-4.47	0.17
200	SLE FR 6	-210	37	5408	-29.74	-4.62	0.18
200	SLE QP 1	-198	34	4992	-27.62	-4.36	0.16
200	SLE QP 2	-205	36	5241	-28.89	-4.51	0.17
200	SLD 1	856	41	5759	-33.45	23.99	0.2
200	SLD 2	856	41	5759	-33.45	23.99	0.2
200	SLD 3	774	37	5595	-28.43	21.97	0.18
200	SLD 4	774	37	5595	-28.43	21.97	0.18
200	SLD 5	237	44	5645	-37.88	7.1	0.21
200	SLD 6	237	44	5645	-37.88	7.1	0.21
200	SLD 7	-36	29	5099	-21.13	0.37	0.14
200	SLD 8	-36	29	5099	-21.13	0.37	0.14
200	SLD 9	-375	42	5384	-36.65	-9.4	0.2
200	SLD 10	-375	42	5384	-36.65	-9.4	0.2
200	SLD 11	-648	27	4838	-19.9	-16.13	0.13
200	SLD 12	-648	27	4838	-19.9	-16.13	0.13
200	SLD 13	-1185	34	4888	-29.35	-31	0.17
200	SLD 14	-1185	34	4888	-29.35	-31	0.17
200	SLD 15	-1267	30	4724	-24.33	-33.02	0.14
200	SLD 16	-1267	30	4724	-24.33	-33.02	0.14
200	SLV 1	2279	49	6462	-39.59	62.2	0.23
200	SLV 2	2279	49	6462	-39.59	62.2	0.23
200	SLV 3	2085	39	6061	-27.8	57.42	0.18
200	SLV 4	2085	39	6061	-27.8	57.42	0.18
200	SLV 5	835	55	6216	-49.98	22.75	0.27
200	SLV 6	835	55	6216	-49.98	22.75	0.27
200	SLV 7	187	21	4879	-10.68	6.82	0.09
200	SLV 8	187	21	4879	-10.68	6.82	0.09
200	SLV 9	-598	50	5604	-47.1	-15.85	0.25
200	SLV 10	-598	50	5604	-47.1	-15.85	0.25
200	SLV 11	-1245	16	4267	-7.8	-31.78	0.07
200	SLV 12	-1245	16	4267	-7.8	-31.78	0.07
200	SLV 13	-2496	32	4422	-29.98	-66.45	0.16
200	SLV 14	-2496	32	4422	-29.98	-66.45	0.16
200	SLV 15	-2690	22	4021	-18.19	-71.23	0.11
200	SLV 16	-2690	22	4021	-18.19	-71.23	0.11
201	SLU 1	-246	41	4603	-32.32	-6.18	0.1
201	SLU 2	-280	41	4592	-32.18	-6.95	0.1
201	SLU 3	-251	43	4746	-33.9	-6.27	0.11
201	SLU 4	-271	43	4739	-33.81	-6.73	0.11
201	SLU 5	-274	42	4692	-33.29	-6.8	0.11
201	SLU 6	-246	45	4847	-35	-6.12	0.11
201	SLU 7	-265	45	4840	-34.92	-6.58	0.11
201	SLU 8	-236	44	4805	-34.53	-5.88	0.11
201	SLU 9	-256	44	4798	-34.45	-6.34	0.11
201	SLU 10	-319	48	5447	-37.78	-7.96	0.12
201	SLU 11	-290	50	5601	-39.49	-7.28	0.13
201	SLU 12	-310	50	5594	-39.41	-7.75	0.13
201	SLU 13	-314	50	5548	-38.88	-7.81	0.12
201	SLU 14	-285	52	5702	-40.6	-7.14	0.13
201	SLU 15	-305	52	5695	-40.51	-7.6	0.13
201	SLU 16	-275	51	5660	-40.13	-6.9	0.13
201	SLU 17	-295	51	5653	-40.04	-7.36	0.13
201	SLU 18	-303	51	5825	-40.32	-7.62	0.13
201	SLU 19	-323	51	5818	-40.23	-8.09	0.13
201	SLU 20	-297	53	5926	-41.42	-7.48	0.13
201	SLU 21	-317	53	5919	-41.34	-7.94	0.13
201	SLU 22	-278	48	5353	-37.91	-6.97	0.12
201	SLU 23	-311	48	5341	-37.77	-7.74	0.12
201	SLU 24	-282	50	5495	-39.49	-7.07	0.13
201	SLU 25	-302	50	5488	-39.4	-7.53	0.13
201	SLU 26	-306	50	5442	-38.87	-7.6	0.12
201	SLU 27	-277	52	5596	-40.59	-6.92	0.13
201	SLU 28	-297	52	5589	-40.5	-7.38	0.13
201	SLU 29	-267	51	5554	-40.12	-6.68	0.13
201	SLU 30	-287	51	5547	-40.04	-7.14	0.13
201	SLU 31	-350	55	6196	-43.36	-8.76	0.14
201	SLU 32	-321	58	6351	-45.08	-8.08	0.14
201	SLU 33	-341	57	6344	-45	-8.54	0.14
201	SLU 34	-345	57	6297	-44.47	-8.61	0.14
201	SLU 35	-316	59	6451	-46.19	-7.93	0.15
201	SLU 36	-336	59	6445	-46.1	-8.4	0.15
201	SLU 37	-307	58	6409	-45.72	-7.69	0.15
201	SLU 38	-326	58	6403	-45.63	-8.16	0.15
201	SLU 39	-334	59	6574	-45.91	-8.42	0.15
201	SLU 40	-354	58	6568	-45.82	-8.88	0.15
201	SLU 41	-329	60	6675	-47.01	-8.28	0.15
201	SLU 42	-348	60	6668	-46.93	-8.74	0.15
201	SLU 43	-310	51	5727	-40.11	-7.75	0.13
201	SLU 44	-343	51	5716	-39.96	-8.53	0.13
201	SLU 45	-314	53	5870	-41.68	-7.85	0.13
201	SLU 46	-334	53	5863	-41.59	-8.31	0.13
201	SLU 47	-338	52	5816	-41.07	-8.38	0.13
201	SLU 48	-309	55	5971	-42.78	-7.7	0.14
201	SLU 49	-329	54	5964	-42.7	-8.16	0.14
201	SLU 50	-299	54	5929	-42.32	-7.46	0.13
201	SLU 51	-319	54	5922	-42.23	-7.92	0.13

Nodo	Cont.	Reazione a traslazione			Reazione a rotazione		
Ind.	N.br.	x	y	z	x	y	z
201	SLU 52	-382	58	6571	-45.56	-9.54	0.14
201	SLU 53	-353	60	6725	-47.28	-8.86	0.15
201	SLU 54	-373	60	6718	-47.19	-9.32	0.15
201	SLU 55	-377	59	6672	-46.66	-9.39	0.15
201	SLU 56	-348	62	6826	-48.38	-8.72	0.15
201	SLU 57	-368	62	6819	-48.29	-9.18	0.15
201	SLU 58	-339	61	6784	-47.91	-8.48	0.15
201	SLU 59	-358	61	6777	-47.83	-8.94	0.15
201	SLU 60	-366	61	6949	-48.1	-9.2	0.15
201	SLU 61	-386	61	6942	-48.01	-9.67	0.15
201	SLU 62	-361	63	7050	-49.21	-9.06	0.16
201	SLU 63	-381	63	7043	-49.12	-9.52	0.16
201	SLU 64	-341	58	6477	-45.69	-8.55	0.15
201	SLU 65	-374	58	6465	-45.55	-9.32	0.14
201	SLU 66	-345	60	6619	-47.27	-8.64	0.15
201	SLU 67	-365	60	6612	-47.18	-9.11	0.15
201	SLU 68	-369	59	6566	-46.65	-9.18	0.15
201	SLU 69	-340	62	6720	-48.37	-8.5	0.15
201	SLU 70	-360	62	6713	-48.29	-8.96	0.15
201	SLU 71	-330	61	6678	-47.9	-8.26	0.15
201	SLU 72	-350	61	6671	-47.82	-8.72	0.15
201	SLU 73	-413	65	7320	-51.15	-10.34	0.16
201	SLU 74	-385	67	7475	-52.86	-9.66	0.17
201	SLU 75	-404	67	7468	-52.78	-10.12	0.17
201	SLU 76	-408	67	7421	-52.25	-10.19	0.17
201	SLU 77	-379	69	7575	-53.97	-9.51	0.17
201	SLU 78	-399	69	7569	-53.88	-9.98	0.17
201	SLU 79	-370	68	7533	-53.5	-9.27	0.17
201	SLU 80	-390	68	7527	-53.41	-9.74	0.17
201	SLU 81	-397	69	7698	-53.69	-10	0.17
201	SLU 82	-417	68	7692	-53.6	-10.46	0.17
201	SLU 83	-392	70	7799	-54.79	-9.85	0.17
201	SLU 84	-412	70	7792	-54.71	-10.32	0.17
201	SLE RA 1	-255	43	4817	-33.92	-6.4	0.11
201	SLE RA 2	-277	43	4810	-33.82	-6.92	0.11
201	SLE RA 3	-258	45	4912	-34.97	-6.47	0.11
201	SLE RA 4	-272	45	4908	-34.91	-6.77	0.11
201	SLE RA 5	-274	44	4877	-34.56	-6.82	0.11
201	SLE RA 6	-255	46	4980	-35.71	-6.37	0.11
201	SLE RA 7	-268	45	4975	-35.65	-6.68	0.11
201	SLE RA 8	-248	45	4952	-35.39	-6.21	0.11
201	SLE RA 9	-262	45	4947	-35.34	-6.52	0.11
201	SLE RA 10	-304	48	5380	-37.56	-7.59	0.12
201	SLE RA 11	-284	49	5483	-38.7	-7.14	0.12
201	SLE RA 12	-298	49	5478	-38.64	-7.45	0.12
201	SLE RA 13	-300	49	5447	-38.29	-7.5	0.12
201	SLE RA 14	-281	50	5550	-39.44	-7.04	0.13
201	SLE RA 15	-294	50	5545	-39.38	-7.35	0.13
201	SLE RA 16	-275	50	5522	-39.13	-6.88	0.12
201	SLE RA 17	-288	50	5517	-39.07	-7.19	0.12
201	SLE RA 18	-293	50	5632	-39.25	-7.37	0.12
201	SLE RA 19	-306	50	5627	-39.19	-7.68	0.12
201	SLE RA 20	-289	51	5699	-39.99	-7.27	0.13
201	SLE RA 21	-303	51	5694	-39.93	-7.58	0.13
201	SLE FR 1	-255	43	4817	-33.92	-6.4	0.11
201	SLE FR 2	-260	43	4816	-33.9	-6.51	0.11
201	SLE FR 3	-254	44	4844	-34.22	-6.36	0.11
201	SLE FR 4	-271	45	5060	-35.5	-6.8	0.11
201	SLE FR 5	-265	46	5089	-35.81	-6.65	0.11
201	SLE FR 6	-274	47	5225	-36.59	-6.89	0.12
201	SLE QP 1	-255	43	4817	-33.92	-6.4	0.11
201	SLE QP 2	-267	45	5062	-35.52	-6.69	0.11
201	SLD 1	824	51	5391	-40.57	21.34	0.13
201	SLD 2	824	51	5391	-40.57	21.34	0.13
201	SLD 3	752	44	5239	-33.23	19.5	0.11
201	SLD 4	752	44	5239	-33.23	19.5	0.11
201	SLD 5	169	57	5391	-48.17	4.51	0.15
201	SLD 6	169	57	5391	-48.17	4.51	0.15
201	SLD 7	-70	34	4884	-23.7	-1.63	0.08
201	SLD 8	-70	34	4884	-23.7	-1.63	0.08
201	SLD 9	-464	56	5239	-47.34	-11.76	0.15
201	SLD 10	-464	56	5239	-47.34	-11.76	0.15
201	SLD 11	-702	33	4732	-22.87	-17.89	0.08
201	SLD 12	-702	33	4732	-22.87	-17.89	0.08
201	SLD 13	-1285	47	4885	-37.81	-32.88	0.12
201	SLD 14	-1285	47	4885	-37.81	-32.88	0.12
201	SLD 15	-1357	40	4733	-30.47	-34.72	0.1
201	SLD 16	-1357	40	4733	-30.47	-34.72	0.1
201	SLV 1	2285	58	5841	-47.38	58.92	0.15
201	SLV 2	2285	58	5841	-47.38	58.92	0.15
201	SLV 3	2115	42	5469	-30.16	54.55	0.1
201	SLV 4	2115	42	5469	-30.16	54.55	0.1
201	SLV 5	757	74	5859	-65.2	19.62	0.2
201	SLV 6	757	74	5859	-65.2	19.62	0.2
201	SLV 7	190	19	4620	-7.79	5.05	0.04
201	SLV 8	190	19	4620	-7.79	5.05	0.04
201	SLV 9	-723	71	5503	-63.25	-18.44	0.19
201	SLV 10	-723	71	5503	-63.25	-18.44	0.19
201	SLV 11	-1290	17	4264	-5.84	-33	0.03
201	SLV 12	-1290	17	4264	-5.84	-33	0.03

Nodo	Cont.	Reazione a traslazione			Reazione a rotazione		
Ind.	N.br.	x	y	z	x	y	z
201	SLV 13	-2648	49	4654	-40.88	-67.94	0.13
201	SLV 14	-2648	49	4654	-40.88	-67.94	0.13
201	SLV 15	-2818	33	4283	-23.66	-72.3	0.08
201	SLV 16	-2818	33	4283	-23.66	-72.3	0.08
202	SLU 1	-227	45	4488	-35.54	-5.1	0.07
202	SLU 2	-265	45	4451	-35.41	-5.99	0.07
202	SLU 3	-229	47	4622	-37.26	-5.12	0.07
202	SLU 4	-252	47	4600	-37.19	-5.66	0.07
202	SLU 5	-258	47	4545	-36.63	-5.8	0.07
202	SLU 6	-222	49	4715	-38.48	-4.93	0.07
202	SLU 7	-245	49	4693	-38.4	-5.47	0.07
202	SLU 8	-213	48	4675	-37.96	-4.71	0.07
202	SLU 9	-236	48	4653	-37.89	-5.25	0.07
202	SLU 10	-306	53	5294	-41.64	-6.92	0.08
202	SLU 11	-270	55	5465	-43.48	-6.05	0.08
202	SLU 12	-293	55	5443	-43.41	-6.59	0.08
202	SLU 13	-299	55	5388	-42.85	-6.73	0.08
202	SLU 14	-263	57	5559	-44.7	-5.85	0.09
202	SLU 15	-286	57	5537	-44.62	-6.39	0.09
202	SLU 16	-254	56	5518	-44.18	-5.64	0.09
202	SLU 17	-277	56	5496	-44.11	-6.17	0.09
202	SLU 18	-285	57	5692	-44.42	-6.42	0.09
202	SLU 19	-308	57	5670	-44.35	-6.96	0.09
202	SLU 20	-279	58	5786	-45.64	-6.23	0.09
202	SLU 21	-301	58	5764	-45.56	-6.76	0.09
202	SLU 22	-258	53	5224	-41.69	-5.78	0.08
202	SLU 23	-296	53	5188	-41.57	-6.68	0.08
202	SLU 24	-260	55	5359	-43.41	-5.81	0.08
202	SLU 25	-283	55	5337	-43.34	-6.34	0.08
202	SLU 26	-289	54	5281	-42.78	-6.49	0.08
202	SLU 27	-253	57	5452	-44.63	-5.61	0.09
202	SLU 28	-276	57	5430	-44.55	-6.15	0.09
202	SLU 29	-244	56	5412	-44.11	-5.4	0.09
202	SLU 30	-267	56	5390	-44.04	-5.93	0.09
202	SLU 31	-337	61	6031	-47.79	-7.6	0.09
202	SLU 32	-301	63	6202	-49.64	-6.73	0.1
202	SLU 33	-324	63	6180	-49.56	-7.27	0.1
202	SLU 34	-330	62	6125	-49	-7.41	0.09
202	SLU 35	-294	65	6296	-50.85	-6.54	0.1
202	SLU 36	-317	65	6274	-50.78	-7.08	0.1
202	SLU 37	-285	64	6255	-50.34	-6.32	0.1
202	SLU 38	-308	64	6233	-50.26	-6.86	0.1
202	SLU 39	-316	65	6429	-50.58	-7.1	0.1
202	SLU 40	-339	64	6407	-50.5	-7.64	0.1
202	SLU 41	-310	66	6523	-51.79	-6.91	0.1
202	SLU 42	-332	66	6501	-51.72	-7.45	0.1
202	SLU 43	-284	56	5581	-44.09	-6.39	0.09
202	SLU 44	-323	56	5544	-43.97	-7.29	0.08
202	SLU 45	-287	58	5715	-45.81	-6.42	0.09
202	SLU 46	-309	58	5693	-45.74	-6.95	0.09
202	SLU 47	-316	57	5638	-45.18	-7.1	0.09
202	SLU 48	-280	60	5809	-47.03	-6.22	0.09
202	SLU 49	-303	60	5787	-46.95	-6.76	0.09
202	SLU 50	-271	59	5769	-46.51	-6.01	0.09
202	SLU 51	-294	59	5747	-46.44	-6.54	0.09
202	SLU 52	-363	64	6388	-50.19	-8.21	0.1
202	SLU 53	-327	66	6559	-52.04	-7.34	0.1
202	SLU 54	-350	66	6537	-51.96	-7.88	0.1
202	SLU 55	-357	65	6482	-51.4	-8.02	0.1
202	SLU 56	-321	68	6652	-53.25	-7.15	0.1
202	SLU 57	-344	68	6630	-53.18	-7.69	0.1
202	SLU 58	-312	67	6612	-52.74	-6.93	0.1
202	SLU 59	-335	67	6590	-52.66	-7.47	0.1
202	SLU 60	-343	68	6786	-52.98	-7.71	0.1
202	SLU 61	-366	67	6764	-52.9	-8.25	0.1
202	SLU 62	-336	69	6880	-54.19	-7.52	0.1
202	SLU 63	-359	69	6858	-54.12	-8.06	0.1
202	SLU 64	-315	64	6318	-50.24	-7.08	0.1
202	SLU 65	-353	64	6281	-50.12	-7.97	0.1
202	SLU 66	-318	66	6452	-51.97	-7.1	0.1
202	SLU 67	-340	66	6430	-51.89	-7.64	0.1
202	SLU 68	-347	65	6375	-51.33	-7.78	0.1
202	SLU 69	-311	68	6546	-53.18	-6.91	0.1
202	SLU 70	-334	68	6524	-53.11	-7.45	0.1
202	SLU 71	-302	67	6506	-52.67	-6.69	0.1
202	SLU 72	-325	67	6484	-52.59	-7.23	0.1
202	SLU 73	-394	72	7125	-56.34	-8.9	0.11
202	SLU 74	-358	74	7296	-58.19	-8.03	0.11
202	SLU 75	-381	74	7274	-58.11	-8.56	0.11
202	SLU 76	-388	73	7218	-57.55	-8.71	0.11
202	SLU 77	-352	76	7389	-59.4	-7.83	0.11
202	SLU 78	-375	76	7367	-59.33	-8.37	0.11
202	SLU 79	-343	75	7349	-58.89	-7.62	0.11
202	SLU 80	-366	75	7327	-58.81	-8.15	0.11
202	SLU 81	-374	75	7523	-59.13	-8.4	0.11
202	SLU 82	-397	75	7501	-59.05	-8.94	0.11
202	SLU 83	-367	77	7617	-60.34	-8.21	0.12
202	SLU 84	-390	77	7595	-60.27	-8.74	0.12
202	SLE RA 1	-236	48	4698	-37.29	-5.29	0.07
202	SLE RA 2	-261	47	4674	-37.21	-5.89	0.07

Nodo	Cont.	Reazione a traslazione			Reazione a rotazione		
Ind.	N.br.	x	y	z	x	y	z
202	SLE RA 3	-237	49	4787	-38.44	-5.31	0.07
202	SLE RA 4	-252	49	4773	-38.4	-5.67	0.07
202	SLE RA 5	-257	48	4736	-38.02	-5.76	0.07
202	SLE RA 6	-233	50	4850	-39.25	-5.18	0.08
202	SLE RA 7	-248	50	4835	-39.2	-5.54	0.08
202	SLE RA 8	-227	50	4823	-38.91	-5.04	0.08
202	SLE RA 9	-242	50	4808	-38.86	-5.39	0.08
202	SLE RA 10	-288	53	5236	-41.36	-6.51	0.08
202	SLE RA 11	-264	54	5350	-42.59	-5.93	0.08
202	SLE RA 12	-280	54	5335	-42.54	-6.28	0.08
202	SLE RA 13	-284	54	5298	-42.17	-6.38	0.08
202	SLE RA 14	-260	55	5412	-43.4	-5.8	0.08
202	SLE RA 15	-275	55	5398	-43.35	-6.16	0.08
202	SLE RA 16	-254	55	5385	-43.06	-5.65	0.08
202	SLE RA 17	-269	55	5371	-43.01	-6.01	0.08
202	SLE RA 18	-275	55	5501	-43.22	-6.17	0.08
202	SLE RA 19	-290	55	5487	-43.17	-6.53	0.08
202	SLE RA 20	-270	56	5564	-44.03	-6.05	0.09
202	SLE RA 21	-285	56	5549	-43.98	-6.4	0.09
202	SLE FR 1	-236	48	4698	-37.29	-5.29	0.07
202	SLE FR 2	-241	48	4693	-37.28	-5.41	0.07
202	SLE FR 3	-234	48	4723	-37.62	-5.24	0.07
202	SLE FR 4	-252	50	4934	-39.05	-5.68	0.08
202	SLE FR 5	-246	50	4964	-39.39	-5.51	0.08
202	SLE FR 6	-255	51	5100	-40.26	-5.73	0.08
202	SLE QP 1	-236	48	4698	-37.29	-5.29	0.07
202	SLE QP 2	-247	50	4939	-39.07	-5.56	0.08
202	SLD 1	860	56	5144	-45.03	22.41	0.08
202	SLD 2	860	56	5144	-45.03	22.41	0.08
202	SLD 3	797	46	4987	-35.3	20.82	0.06
202	SLD 4	797	46	4987	-35.3	20.82	0.06
202	SLD 5	181	67	5239	-55.61	5.24	0.1
202	SLD 6	181	67	5239	-55.61	5.24	0.1
202	SLD 7	-31	33	4715	-23.19	-0.05	0.05
202	SLD 8	-31	33	4715	-23.19	-0.05	0.05
202	SLD 9	-464	67	5163	-54.95	-11.06	0.11
202	SLD 10	-464	67	5163	-54.95	-11.06	0.11
202	SLD 11	-676	32	4639	-22.53	-16.35	0.05
202	SLD 12	-676	32	4639	-22.53	-16.35	0.05
202	SLD 13	-1292	54	4891	-42.84	-31.93	0.09
202	SLD 14	-1292	54	4891	-42.84	-31.93	0.09
202	SLD 15	-1355	44	4734	-33.12	-33.52	0.07
202	SLD 16	-1355	44	4734	-33.12	-33.52	0.07
202	SLV 1	2346	65	5429	-53.08	59.91	0.09
202	SLV 2	2346	65	5429	-53.08	59.91	0.09
202	SLV 3	2195	40	5046	-30.27	56.13	0.05
202	SLV 4	2195	40	5046	-30.27	56.13	0.05
202	SLV 5	761	91	5666	-77.87	19.82	0.14
202	SLV 6	761	91	5666	-77.87	19.82	0.14
202	SLV 7	255	10	4391	-1.83	7.21	0
202	SLV 8	255	10	4391	-1.83	7.21	0
202	SLV 9	-750	89	5487	-76.31	-18.33	0.15
202	SLV 10	-750	89	5487	-76.31	-18.33	0.15
202	SLV 11	-1256	9	4212	-0.27	-30.93	0.01
202	SLV 12	-1256	9	4212	-0.27	-30.93	0.01
202	SLV 13	-2689	59	4832	-47.87	-67.24	0.1
202	SLV 14	-2689	59	4832	-47.87	-67.24	0.1
202	SLV 15	-2841	35	4449	-25.06	-71.02	0.06
202	SLV 16	-2841	35	4449	-25.06	-71.02	0.06
203	SLU 1	-189	46	4453	-35.95	-5.13	0.02
203	SLU 2	-232	46	4387	-35.87	-6.1	0.02
203	SLU 3	-188	48	4583	-37.69	-5.13	0.02
203	SLU 4	-214	48	4544	-37.64	-5.71	0.02
203	SLU 5	-224	47	4477	-37.1	-5.9	0.02
203	SLU 6	-179	50	4673	-38.92	-4.93	0.02
203	SLU 7	-205	50	4634	-38.87	-5.51	0.02
203	SLU 8	-171	49	4633	-38.4	-4.73	0.02
203	SLU 9	-197	49	4594	-38.36	-5.31	0.02
203	SLU 10	-273	54	5231	-42.2	-7.2	0.02
203	SLU 11	-228	56	5426	-44.02	-6.23	0.02
203	SLU 12	-255	56	5387	-43.97	-6.81	0.02
203	SLU 13	-264	56	5321	-43.42	-7	0.02
203	SLU 14	-220	58	5516	-45.24	-6.03	0.02
203	SLU 15	-246	58	5477	-45.2	-6.61	0.02
203	SLU 16	-211	57	5476	-44.73	-5.83	0.02
203	SLU 17	-238	57	5437	-44.68	-6.41	0.02
203	SLU 18	-246	58	5658	-44.98	-6.7	0.02
203	SLU 19	-273	58	5618	-44.94	-7.28	0.02
203	SLU 20	-238	59	5748	-46.21	-6.5	0.02
203	SLU 21	-264	59	5708	-46.17	-7.08	0.02
203	SLU 22	-217	54	5189	-42.17	-5.92	0.02
203	SLU 23	-261	54	5124	-42.1	-6.89	0.02
203	SLU 24	-216	56	5320	-43.91	-5.93	0.02
203	SLU 25	-242	56	5280	-43.87	-6.51	0.02
203	SLU 26	-252	55	5214	-43.32	-6.69	0.02
203	SLU 27	-207	58	5410	-45.14	-5.73	0.02
203	SLU 28	-234	58	5370	-45.1	-6.31	0.02
203	SLU 29	-199	57	5369	-44.63	-5.52	0.02
203	SLU 30	-226	57	5330	-44.58	-6.1	0.02
203	SLU 31	-301	62	5967	-48.42	-7.99	0.02

Nodo	Cont.	Reazione a traslazione			Reazione a rotazione		
Ind.	N.br.	x	y	z	x	y	z
203	SLU 32	-257	64	6163	-50.24	-7.03	0.02
203	SLU 33	-283	64	6124	-50.2	-7.61	0.02
203	SLU 34	-292	64	6057	-49.65	-7.79	0.02
203	SLU 35	-248	66	6253	-51.47	-6.83	0.02
203	SLU 36	-274	66	6214	-51.42	-7.41	0.02
203	SLU 37	-240	65	6213	-50.95	-6.62	0.02
203	SLU 38	-266	65	6173	-50.91	-7.2	0.02
203	SLU 39	-275	66	6394	-51.21	-7.5	0.02
203	SLU 40	-301	66	6355	-51.16	-8.08	0.02
203	SLU 41	-266	67	6484	-52.44	-7.29	0.02
203	SLU 42	-292	67	6445	-52.39	-7.88	0.02
203	SLU 43	-235	57	5536	-44.59	-6.39	0.02
203	SLU 44	-279	57	5471	-44.52	-7.36	0.02
203	SLU 45	-235	59	5666	-46.34	-6.4	0.02
203	SLU 46	-261	59	5627	-46.29	-6.98	0.02
203	SLU 47	-271	59	5561	-45.75	-7.16	0.02
203	SLU 48	-226	61	5757	-47.57	-6.2	0.02
203	SLU 49	-252	61	5717	-47.52	-6.78	0.02
203	SLU 50	-218	60	5716	-47.05	-5.99	0.02
203	SLU 51	-244	60	5677	-47.01	-6.57	0.02
203	SLU 52	-320	65	6314	-50.85	-8.46	0.02
203	SLU 53	-275	68	6510	-52.67	-7.5	0.02
203	SLU 54	-302	67	6470	-52.62	-8.08	0.02
203	SLU 55	-311	67	6404	-52.07	-8.26	0.02
203	SLU 56	-266	69	6600	-53.89	-7.3	0.02
203	SLU 57	-293	69	6561	-53.85	-7.88	0.02
203	SLU 58	-258	68	6560	-53.38	-7.09	0.02
203	SLU 59	-285	68	6520	-53.33	-7.67	0.02
203	SLU 60	-293	69	6741	-53.63	-7.97	0.02
203	SLU 61	-320	69	6702	-53.59	-8.55	0.02
203	SLU 62	-284	70	6831	-54.86	-7.76	0.02
203	SLU 63	-311	70	6792	-54.81	-8.35	0.02
203	SLU 64	-264	65	6273	-50.82	-7.19	0.02
203	SLU 65	-308	65	6207	-50.74	-8.16	0.02
203	SLU 66	-263	67	6403	-52.56	-7.19	0.02
203	SLU 67	-289	67	6364	-52.52	-7.77	0.02
203	SLU 68	-299	67	6297	-51.97	-7.96	0.02
203	SLU 69	-254	69	6493	-53.79	-6.99	0.02
203	SLU 70	-281	69	6454	-53.75	-7.57	0.02
203	SLU 71	-246	68	6453	-53.28	-6.79	0.02
203	SLU 72	-272	68	6414	-53.23	-7.37	0.02
203	SLU 73	-348	73	7051	-57.07	-9.26	0.03
203	SLU 74	-303	76	7246	-58.89	-8.29	0.03
203	SLU 75	-330	75	7207	-58.85	-8.87	0.03
203	SLU 76	-339	75	7141	-58.3	-9.06	0.03
203	SLU 77	-295	77	7336	-60.12	-8.09	0.03
203	SLU 78	-321	77	7297	-60.07	-8.67	0.03
203	SLU 79	-287	76	7296	-59.6	-7.89	0.03
203	SLU 80	-313	76	7257	-59.56	-8.47	0.03
203	SLU 81	-321	77	7478	-59.86	-8.76	0.03
203	SLU 82	-348	77	7438	-59.81	-9.34	0.03
203	SLU 83	-313	78	7568	-61.08	-8.56	0.03
203	SLU 84	-339	78	7528	-61.04	-9.14	0.03
203	SLE RA 1	-197	48	4663	-37.72	-5.36	0.02
203	SLE RA 2	-226	48	4620	-37.67	-6	0.02
203	SLE RA 3	-196	50	4750	-38.89	-5.36	0.02
203	SLE RA 4	-214	50	4724	-38.86	-5.75	0.02
203	SLE RA 5	-220	49	4680	-38.49	-5.87	0.02
203	SLE RA 6	-190	51	4810	-39.71	-5.22	0.02
203	SLE RA 7	-208	51	4784	-39.68	-5.61	0.02
203	SLE RA 8	-185	50	4783	-39.36	-5.09	0.02
203	SLE RA 9	-202	50	4757	-39.33	-5.47	0.02
203	SLE RA 10	-253	54	5182	-41.89	-6.73	0.02
203	SLE RA 11	-223	55	5312	-43.1	-6.09	0.02
203	SLE RA 12	-241	55	5286	-43.07	-6.48	0.02
203	SLE RA 13	-247	55	5242	-42.71	-6.6	0.02
203	SLE RA 14	-217	56	5372	-43.92	-5.96	0.02
203	SLE RA 15	-235	56	5346	-43.89	-6.34	0.02
203	SLE RA 16	-212	56	5346	-43.58	-5.82	0.02
203	SLE RA 17	-229	56	5319	-43.55	-6.21	0.02
203	SLE RA 18	-235	56	5467	-43.75	-6.4	0.02
203	SLE RA 19	-253	56	5440	-43.72	-6.79	0.02
203	SLE RA 20	-229	57	5527	-44.57	-6.27	0.02
203	SLE RA 21	-247	57	5500	-44.54	-6.66	0.02
203	SLE FR 1	-197	48	4663	-37.72	-5.36	0.02
203	SLE FR 2	-202	48	4655	-37.71	-5.49	0.02
203	SLE FR 3	-194	49	4687	-38.05	-5.3	0.02
203	SLE FR 4	-214	51	4896	-39.52	-5.8	0.02
203	SLE FR 5	-206	51	4928	-39.86	-5.62	0.02
203	SLE FR 6	-216	52	5065	-40.74	-5.88	0.02
203	SLE QP 1	-197	48	4663	-37.72	-5.36	0.02
203	SLE QP 2	-208	51	4904	-39.53	-5.67	0.02
203	SLD 1	905	59	4902	-46.68	21.58	0.02
203	SLD 2	905	59	4902	-46.68	21.58	0.02
203	SLD 3	845	45	4726	-35.02	20.12	0.01
203	SLD 4	845	45	4726	-35.02	20.12	0.01
203	SLD 5	216	74	5170	-59.35	4.73	0.03
203	SLD 6	216	74	5170	-59.35	4.73	0.03
203	SLD 7	17	28	4584	-20.5	-0.16	0
203	SLD 8	17	28	4584	-20.5	-0.16	0

Nodo	Cont.	Reazione a traslazione			Reazione a rotazione		
Ind.	N.br.	x	y	z	x	y	z
203	SLD 9	-433	73	5225	-58.56	-11.18	0.03
203	SLD 10	-433	73	5225	-58.56	-11.18	0.03
203	SLD 11	-633	28	4638	-19.71	-16.07	0.01
203	SLD 12	-633	28	4638	-19.71	-16.07	0.01
203	SLD 13	-1262	56	5083	-44.04	-31.46	0.02
203	SLD 14	-1262	56	5083	-44.04	-31.46	0.02
203	SLD 15	-1321	42	4907	-32.39	-32.92	0.02
203	SLD 16	-1321	42	4907	-32.39	-32.92	0.02
203	SLV 1	2399	70	4903	-56.36	58.15	0.02
203	SLV 2	2399	70	4903	-56.36	58.15	0.02
203	SLV 3	2255	38	4476	-29.04	54.62	0.01
203	SLV 4	2255	38	4476	-29.04	54.62	0.01
203	SLV 5	792	105	5552	-86.01	18.82	0.05
203	SLV 6	792	105	5552	-86.01	18.82	0.05
203	SLV 7	312	-1	4128	5.04	7.07	-0.01
203	SLV 8	312	-1	4128	5.04	7.07	-0.01
203	SLV 9	-729	103	5681	-84.1	-18.41	0.05
203	SLV 10	-729	103	5681	-84.1	-18.41	0.05
203	SLV 11	-1209	-4	4257	6.94	-30.16	-0.01
203	SLV 12	-1209	-4	4257	6.94	-30.16	-0.01
203	SLV 13	-2671	63	5333	-50.02	-65.96	0.03
203	SLV 14	-2671	63	5333	-50.02	-65.96	0.03
203	SLV 15	-2815	31	4905	-22.71	-69.49	0.01
203	SLV 16	-2815	31	4905	-22.71	-69.49	0.01
204	SLU 1	-100	43	4537	-33.6	-2.13	-0.06
204	SLU 2	-153	43	4436	-33.61	-3.35	-0.06
204	SLU 3	-94	45	4669	-35.24	-1.98	-0.07
204	SLU 4	-126	45	4608	-35.24	-2.71	-0.07
204	SLU 5	-141	44	4526	-34.76	-3.05	-0.07
204	SLU 6	-82	46	4760	-36.39	-1.67	-0.07
204	SLU 7	-114	46	4699	-36.39	-2.4	-0.07
204	SLU 8	-76	46	4718	-35.9	-1.52	-0.07
204	SLU 9	-107	46	4657	-35.91	-2.25	-0.07
204	SLU 10	-184	50	5297	-39.53	-4.04	-0.08
204	SLU 11	-125	53	5531	-41.16	-2.66	-0.08
204	SLU 12	-157	53	5470	-41.16	-3.39	-0.08
204	SLU 13	-171	52	5388	-40.68	-3.73	-0.08
204	SLU 14	-113	54	5622	-42.31	-2.35	-0.08
204	SLU 15	-144	54	5561	-42.31	-3.08	-0.08
204	SLU 16	-106	53	5580	-41.83	-2.2	-0.08
204	SLU 17	-138	53	5519	-41.83	-2.93	-0.08
204	SLU 18	-144	54	5768	-42.07	-3.11	-0.08
204	SLU 19	-176	54	5707	-42.07	-3.84	-0.08
204	SLU 20	-131	55	5859	-43.22	-2.8	-0.08
204	SLU 21	-163	55	5798	-43.22	-3.53	-0.08
204	SLU 22	-117	50	5292	-39.42	-2.48	-0.08
204	SLU 23	-170	50	5190	-39.42	-3.71	-0.08
204	SLU 24	-111	52	5424	-41.05	-2.33	-0.08
204	SLU 25	-143	52	5363	-41.05	-3.06	-0.08
204	SLU 26	-157	52	5281	-40.57	-3.4	-0.08
204	SLU 27	-98	54	5515	-42.2	-2.02	-0.08
204	SLU 28	-130	54	5454	-42.2	-2.75	-0.08
204	SLU 29	-92	53	5473	-41.72	-1.87	-0.08
204	SLU 30	-124	53	5412	-41.72	-2.6	-0.08
204	SLU 31	-200	58	6052	-45.35	-4.39	-0.09
204	SLU 32	-141	60	6286	-46.98	-3.01	-0.09
204	SLU 33	-173	60	6225	-46.98	-3.74	-0.09
204	SLU 34	-188	59	6143	-46.5	-4.08	-0.09
204	SLU 35	-129	61	6376	-48.13	-2.7	-0.09
204	SLU 36	-161	61	6315	-48.13	-3.44	-0.09
204	SLU 37	-123	61	6335	-47.65	-2.55	-0.09
204	SLU 38	-154	61	6274	-47.65	-3.29	-0.09
204	SLU 39	-160	61	6523	-47.89	-3.46	-0.09
204	SLU 40	-192	61	6462	-47.89	-4.19	-0.09
204	SLU 41	-148	63	6614	-49.04	-3.15	-0.09
204	SLU 42	-180	63	6553	-49.04	-3.89	-0.09
204	SLU 43	-124	53	5640	-41.69	-2.65	-0.08
204	SLU 44	-177	53	5538	-41.69	-3.87	-0.08
204	SLU 45	-119	55	5772	-43.32	-2.49	-0.08
204	SLU 46	-150	55	5711	-43.32	-3.23	-0.08
204	SLU 47	-165	55	5629	-42.84	-3.57	-0.08
204	SLU 48	-106	57	5862	-44.47	-2.19	-0.09
204	SLU 49	-138	57	5801	-44.47	-2.92	-0.08
204	SLU 50	-100	56	5821	-43.99	-2.04	-0.08
204	SLU 51	-132	56	5760	-43.99	-2.77	-0.08
204	SLU 52	-208	61	6400	-47.62	-4.56	-0.09
204	SLU 53	-149	63	6634	-49.25	-3.18	-0.09
204	SLU 54	-181	63	6573	-49.25	-3.91	-0.09
204	SLU 55	-196	62	6490	-48.77	-4.25	-0.09
204	SLU 56	-137	64	6724	-50.4	-2.87	-0.1
204	SLU 57	-169	64	6663	-50.4	-3.6	-0.1
204	SLU 58	-130	64	6682	-49.92	-2.72	-0.1
204	SLU 59	-162	64	6621	-49.92	-3.45	-0.1
204	SLU 60	-168	64	6871	-50.16	-3.63	-0.1
204	SLU 61	-200	64	6810	-50.16	-4.36	-0.1
204	SLU 62	-156	66	6961	-51.31	-3.32	-0.1
204	SLU 63	-188	65	6900	-51.31	-4.05	-0.1
204	SLU 64	-141	61	6394	-47.51	-3	-0.09
204	SLU 65	-194	61	6293	-47.51	-4.23	-0.09
204	SLU 66	-135	63	6526	-49.14	-2.85	-0.09

Nodo	Cont.	Reazione a traslazione			Reazione a rotazione		
Ind.	N.br.	x	y	z	x	y	z
204	SLU 67	-167	63	6466	-49.14	-3.58	-0.09
204	SLU 68	-182	62	6383	-48.66	-3.92	-0.09
204	SLU 69	-123	64	6617	-50.29	-2.54	-0.1
204	SLU 70	-155	64	6556	-50.29	-3.27	-0.1
204	SLU 71	-116	64	6575	-49.81	-2.39	-0.1
204	SLU 72	-148	64	6514	-49.81	-3.12	-0.1
204	SLU 73	-224	68	7155	-53.44	-4.91	-0.1
204	SLU 74	-166	70	7388	-55.07	-3.53	-0.11
204	SLU 75	-197	70	7327	-55.07	-4.26	-0.11
204	SLU 76	-212	70	7245	-54.59	-4.6	-0.1
204	SLU 77	-153	72	7479	-56.22	-3.22	-0.11
204	SLU 78	-185	72	7418	-56.22	-3.96	-0.11
204	SLU 79	-147	71	7437	-55.73	-3.07	-0.11
204	SLU 80	-179	71	7376	-55.74	-3.8	-0.11
204	SLU 81	-185	72	7626	-55.97	-3.98	-0.11
204	SLU 82	-216	71	7565	-55.97	-4.71	-0.11
204	SLU 83	-172	73	7716	-57.12	-3.67	-0.11
204	SLU 84	-204	73	7655	-57.12	-4.41	-0.11
204	SLE RA 1	-105	45	4753	-35.27	-2.23	-0.07
204	SLE RA 2	-140	45	4685	-35.27	-3.05	-0.07
204	SLE RA 3	-101	46	4841	-36.35	-2.13	-0.07
204	SLE RA 4	-122	46	4800	-36.35	-2.62	-0.07
204	SLE RA 5	-132	46	4745	-36.03	-2.84	-0.07
204	SLE RA 6	-93	47	4901	-37.12	-1.92	-0.07
204	SLE RA 7	-114	47	4861	-37.12	-2.41	-0.07
204	SLE RA 8	-88	47	4873	-36.8	-1.82	-0.07
204	SLE RA 9	-110	47	4833	-36.8	-2.31	-0.07
204	SLE RA 10	-160	50	5260	-39.22	-3.5	-0.07
204	SLE RA 11	-121	51	5415	-40.3	-2.58	-0.08
204	SLE RA 12	-142	51	5375	-40.31	-3.07	-0.08
204	SLE RA 13	-152	51	5320	-39.98	-3.3	-0.08
204	SLE RA 14	-113	52	5476	-41.07	-2.38	-0.08
204	SLE RA 15	-134	52	5435	-41.07	-2.87	-0.08
204	SLE RA 16	-109	52	5448	-40.75	-2.28	-0.08
204	SLE RA 17	-130	52	5407	-40.75	-2.77	-0.08
204	SLE RA 18	-134	52	5574	-40.91	-2.88	-0.08
204	SLE RA 19	-155	52	5533	-40.91	-3.37	-0.08
204	SLE RA 20	-126	53	5634	-41.68	-2.68	-0.08
204	SLE RA 21	-147	53	5593	-41.68	-3.17	-0.08
204	SLE FR 1	-105	45	4753	-35.27	-2.23	-0.07
204	SLE FR 2	-112	45	4739	-35.27	-2.4	-0.07
204	SLE FR 3	-102	45	4777	-35.57	-2.15	-0.07
204	SLE FR 4	-121	47	4986	-36.96	-2.59	-0.07
204	SLE FR 5	-110	48	5023	-37.27	-2.35	-0.07
204	SLE FR 6	-119	49	5163	-38.09	-2.56	-0.07
204	SLE QP 1	-105	45	4753	-35.27	-2.23	-0.07
204	SLE QP 2	-114	47	4999	-36.96	-2.43	-0.07
204	SLD 1	931	53	4725	-44.97	23	-0.08
204	SLD 2	931	53	4725	-44.97	23	-0.08
204	SLD 3	992	37	4929	-32.42	24.48	-0.06
204	SLD 4	992	37	4929	-32.42	24.48	-0.06
204	SLD 5	108	72	4607	-58.41	2.96	-0.11
204	SLD 6	108	72	4607	-58.41	2.96	-0.11
204	SLD 7	310	21	5287	-16.55	7.88	-0.04
204	SLD 8	310	21	5287	-16.55	7.88	-0.04
204	SLD 9	-537	73	4711	-57.37	-12.74	-0.1
204	SLD 10	-537	73	4711	-57.37	-12.74	-0.1
204	SLD 11	-335	22	5391	-15.51	-7.82	-0.04
204	SLD 12	-335	22	5391	-15.51	-7.82	-0.04
204	SLD 13	-1219	57	5069	-41.5	-29.33	-0.08
204	SLD 14	-1219	57	5069	-41.5	-29.33	-0.08
204	SLD 15	-1158	42	5274	-28.95	-27.86	-0.06
204	SLD 16	-1158	42	5274	-28.95	-27.86	-0.06
204	SLV 1	2328	60	4346	-55.84	57.01	-0.1
204	SLV 2	2328	60	4346	-55.84	57.01	-0.1
204	SLV 3	2477	24	4841	-26.42	60.6	-0.05
204	SLV 4	2477	24	4841	-26.42	60.6	-0.05
204	SLV 5	394	106	4051	-87.24	9.94	-0.15
204	SLV 6	394	106	4051	-87.24	9.94	-0.15
204	SLV 7	889	-14	5704	10.82	21.94	0.01
204	SLV 8	889	-14	5704	10.82	21.94	0.01
204	SLV 9	-1116	109	4295	-84.74	-26.8	-0.15
204	SLV 10	-1116	109	4295	-84.74	-26.8	-0.15
204	SLV 11	-621	-11	5947	13.32	-14.8	0.01
204	SLV 12	-621	-11	5947	13.32	-14.8	0.01
204	SLV 13	-2704	70	5157	-47.5	-65.46	-0.09
204	SLV 14	-2704	70	5157	-47.5	-65.46	-0.09
204	SLV 15	-2555	35	5653	-18.08	-61.86	-0.04
204	SLV 16	-2555	35	5653	-18.08	-61.86	-0.04
205	SLU 1	-64	36	4742	-28.7	-2.97	-0.14
205	SLU 2	-125	36	4595	-28.8	-4.33	-0.14
205	SLU 3	-55	38	4882	-30.09	-2.81	-0.15
205	SLU 4	-92	38	4794	-30.16	-3.62	-0.15
205	SLU 5	-111	37	4690	-29.79	-4.01	-0.15
205	SLU 6	-41	39	4977	-31.08	-2.49	-0.16
205	SLU 7	-77	39	4889	-31.14	-3.3	-0.16
205	SLU 8	-36	38	4932	-30.67	-2.33	-0.15
205	SLU 9	-72	38	4844	-30.73	-3.15	-0.15
205	SLU 10	-156	42	5494	-33.86	-5.37	-0.17
205	SLU 11	-86	44	5782	-35.15	-3.85	-0.18

Nodo	Cont.	Reazione a traslazione			Reazione a rotazione		
Ind.	N.br.	x	y	z	x	y	z
205	SLU 12	-122	44	5693	-35.22	-4.66	-0.18
205	SLU 13	-141	44	5589	-34.85	-5.05	-0.17
205	SLU 14	-72	45	5877	-36.14	-3.53	-0.18
205	SLU 15	-108	45	5788	-36.2	-4.34	-0.18
205	SLU 16	-67	45	5831	-35.73	-3.37	-0.18
205	SLU 17	-103	45	5743	-35.79	-4.19	-0.18
205	SLU 18	-108	45	6027	-35.93	-4.46	-0.18
205	SLU 19	-144	45	5938	-35.99	-5.27	-0.18
205	SLU 20	-94	46	6122	-36.91	-4.14	-0.18
205	SLU 21	-130	46	6033	-36.97	-4.95	-0.18
205	SLU 22	-78	42	5534	-33.66	-3.58	-0.17
205	SLU 23	-139	42	5387	-33.77	-4.94	-0.17
205	SLU 24	-69	44	5674	-35.06	-3.41	-0.18
205	SLU 25	-106	44	5586	-35.12	-4.23	-0.18
205	SLU 26	-125	43	5482	-34.76	-4.62	-0.17
205	SLU 27	-55	45	5769	-36.05	-3.1	-0.18
205	SLU 28	-92	45	5681	-36.11	-3.91	-0.18
205	SLU 29	-50	45	5724	-35.64	-2.94	-0.18
205	SLU 30	-86	45	5636	-35.7	-3.76	-0.18
205	SLU 31	-170	49	6286	-38.83	-5.98	-0.19
205	SLU 32	-100	50	6574	-40.12	-4.45	-0.2
205	SLU 33	-137	50	6485	-40.18	-5.27	-0.2
205	SLU 34	-156	50	6381	-39.81	-5.66	-0.2
205	SLU 35	-86	51	6669	-41.11	-4.13	-0.21
205	SLU 36	-122	51	6580	-41.17	-4.95	-0.21
205	SLU 37	-81	51	6623	-40.7	-3.98	-0.2
205	SLU 38	-117	51	6535	-40.76	-4.8	-0.2
205	SLU 39	-122	51	6819	-40.89	-5.06	-0.2
205	SLU 40	-159	51	6730	-40.95	-5.88	-0.2
205	SLU 41	-108	52	6914	-41.88	-4.74	-0.21
205	SLU 42	-145	52	6825	-41.94	-5.56	-0.21
205	SLU 43	-78	45	5893	-35.6	-3.66	-0.18
205	SLU 44	-139	45	5746	-35.71	-5.02	-0.18
205	SLU 45	-69	46	6033	-37	-3.49	-0.19
205	SLU 46	-106	46	5945	-37.06	-4.31	-0.19
205	SLU 47	-125	46	5841	-36.7	-4.7	-0.18
205	SLU 48	-55	48	6128	-37.99	-3.17	-0.19
205	SLU 49	-92	48	6040	-38.05	-3.99	-0.19
205	SLU 50	-50	47	6083	-37.58	-3.02	-0.19
205	SLU 51	-87	47	5995	-37.64	-3.83	-0.19
205	SLU 52	-170	51	6645	-40.77	-6.06	-0.2
205	SLU 53	-100	53	6933	-42.06	-4.53	-0.21
205	SLU 54	-137	53	6844	-42.12	-5.35	-0.21
205	SLU 55	-156	52	6740	-41.76	-5.74	-0.21
205	SLU 56	-86	54	7028	-43.05	-4.21	-0.22
205	SLU 57	-123	54	6939	-43.11	-5.03	-0.22
205	SLU 58	-81	53	6982	-42.64	-4.06	-0.21
205	SLU 59	-117	53	6894	-42.7	-4.87	-0.21
205	SLU 60	-122	54	7178	-42.83	-5.14	-0.21
205	SLU 61	-159	54	7089	-42.9	-5.96	-0.21
205	SLU 62	-108	55	7273	-43.82	-4.82	-0.22
205	SLU 63	-145	55	7184	-43.88	-5.64	-0.22
205	SLU 64	-92	51	6685	-40.57	-4.26	-0.2
205	SLU 65	-153	51	6538	-40.68	-5.62	-0.2
205	SLU 66	-84	53	6826	-41.97	-4.1	-0.21
205	SLU 67	-120	53	6737	-42.03	-4.91	-0.21
205	SLU 68	-139	52	6633	-41.66	-5.3	-0.21
205	SLU 69	-69	54	6921	-42.95	-3.78	-0.21
205	SLU 70	-106	54	6832	-43.02	-4.6	-0.21
205	SLU 71	-64	53	6875	-42.54	-3.62	-0.21
205	SLU 72	-101	53	6787	-42.61	-4.44	-0.21
205	SLU 73	-184	57	7437	-45.74	-6.66	-0.23
205	SLU 74	-114	59	7725	-47.03	-5.14	-0.24
205	SLU 75	-151	59	7636	-47.09	-5.95	-0.24
205	SLU 76	-170	58	7532	-46.72	-6.34	-0.23
205	SLU 77	-100	60	7820	-48.01	-4.82	-0.24
205	SLU 78	-137	60	7731	-48.07	-5.63	-0.24
205	SLU 79	-95	60	7774	-47.6	-4.66	-0.24
205	SLU 80	-132	60	7686	-47.67	-5.48	-0.24
205	SLU 81	-136	60	7970	-47.8	-5.75	-0.24
205	SLU 82	-173	60	7882	-47.86	-6.56	-0.24
205	SLU 83	-122	61	8065	-48.78	-5.43	-0.24
205	SLU 84	-159	61	7977	-48.85	-6.24	-0.24
205	SLE RA 1	-68	38	4968	-30.12	-3.15	-0.15
205	SLE RA 2	-109	38	4870	-30.19	-4.05	-0.15
205	SLE RA 3	-62	39	5062	-31.05	-3.04	-0.16
205	SLE RA 4	-86	39	5003	-31.09	-3.58	-0.16
205	SLE RA 5	-99	39	4934	-30.84	-3.84	-0.15
205	SLE RA 6	-53	40	5125	-31.7	-2.82	-0.16
205	SLE RA 7	-77	40	5066	-31.75	-3.37	-0.16
205	SLE RA 8	-49	39	5095	-31.43	-2.72	-0.16
205	SLE RA 9	-74	39	5036	-31.47	-3.26	-0.16
205	SLE RA 10	-129	42	5470	-33.56	-4.75	-0.17
205	SLE RA 11	-83	43	5661	-34.42	-3.73	-0.17
205	SLE RA 12	-107	43	5603	-34.46	-4.27	-0.17
205	SLE RA 13	-120	43	5533	-34.22	-4.53	-0.17
205	SLE RA 14	-73	44	5725	-35.08	-3.52	-0.18
205	SLE RA 15	-98	44	5666	-35.12	-4.06	-0.18
205	SLE RA 16	-70	44	5695	-34.8	-3.41	-0.17
205	SLE RA 17	-94	44	5636	-34.85	-3.96	-0.17

Nodo	Cont.	Reazione a traslazione			Reazione a rotazione		
Ind.	N.br.	x	y	z	x	y	z
205	SLE RA 18	-97	44	5825	-34.94	-4.13	-0.17
205	SLE RA 19	-122	44	5766	-34.98	-4.68	-0.17
205	SLE RA 20	-88	45	5888	-35.59	-3.92	-0.18
205	SLE RA 21	-112	45	5829	-35.63	-4.47	-0.18
205	SLE FR 1	-68	38	4968	-30.12	-3.15	-0.15
205	SLE FR 2	-76	38	4949	-30.13	-3.33	-0.15
205	SLE FR 3	-64	38	4994	-30.38	-3.06	-0.15
205	SLE FR 4	-85	40	5206	-31.58	-3.62	-0.16
205	SLE FR 5	-73	40	5251	-31.83	-3.36	-0.16
205	SLE FR 6	-83	41	5397	-32.53	-3.64	-0.16
205	SLE QP 1	-68	38	4968	-30.12	-3.15	-0.15
205	SLE QP 2	-77	40	5225	-31.56	-3.44	-0.16
205	SLD 1	950	44	4808	-39.71	22.95	-0.2
205	SLD 2	950	44	4808	-39.71	22.95	-0.2
205	SLD 3	1016	29	5051	-27.64	24.57	-0.14
205	SLD 4	1016	29	5051	-27.64	24.57	-0.14
205	SLD 5	131	63	4732	-52.3	2.02	-0.26
205	SLD 6	131	63	4732	-52.3	2.02	-0.26
205	SLD 7	351	14	5541	-12.09	7.42	-0.07
205	SLD 8	351	14	5541	-12.09	7.42	-0.07
205	SLD 9	-505	65	4910	-51.04	-14.31	-0.25
205	SLD 10	-505	65	4910	-51.04	-14.31	-0.25
205	SLD 11	-285	16	5719	-10.82	-8.9	-0.06
205	SLD 12	-285	16	5719	-10.82	-8.9	-0.06
205	SLD 13	-1170	50	5400	-35.48	-31.46	-0.17
205	SLD 14	-1170	50	5400	-35.48	-31.46	-0.17
205	SLD 15	-1104	35	5643	-23.42	-29.84	-0.12
205	SLD 16	-1104	35	5643	-23.42	-29.84	-0.12
205	SLV 1	2322	50	4235	-50.79	58.22	-0.25
205	SLV 2	2322	50	4235	-50.79	58.22	-0.25
205	SLV 3	2486	15	4827	-22.53	62.21	-0.12
205	SLV 4	2486	15	4827	-22.53	62.21	-0.12
205	SLV 5	396	95	4030	-80.19	9	-0.39
205	SLV 6	396	95	4030	-80.19	9	-0.39
205	SLV 7	939	-20	6004	14.01	22.3	0.05
205	SLV 8	939	-20	6004	14.01	22.3	0.05
205	SLV 9	-1093	99	4447	-77.13	-29.19	-0.37
205	SLV 10	-1093	99	4447	-77.13	-29.19	-0.37
205	SLV 11	-549	-16	6421	17.07	-15.89	0.07
205	SLV 12	-549	-16	6421	17.07	-15.89	0.07
205	SLV 13	-2639	64	5624	-40.6	-69.09	-0.2
205	SLV 14	-2639	64	5624	-40.6	-69.09	-0.2
205	SLV 15	-2476	29	6216	-12.34	-65.1	-0.06
205	SLV 16	-2476	29	6216	-12.34	-65.1	-0.06
206	SLU 1	-32	26	5076	-21.61	-0.98	-0.23
206	SLU 2	-102	26	4870	-21.84	-2.76	-0.23
206	SLU 3	-20	27	5231	-22.67	-0.67	-0.24
206	SLU 4	-62	27	5107	-22.81	-1.74	-0.24
206	SLU 5	-87	27	4973	-22.59	-2.34	-0.24
206	SLU 6	-5	28	5334	-23.42	-0.24	-0.25
206	SLU 7	-47	28	5210	-23.56	-1.32	-0.25
206	SLU 8	-1	28	5283	-23.11	-0.13	-0.25
206	SLU 9	-43	28	5159	-23.25	-1.2	-0.25
206	SLU 10	-133	31	5827	-25.65	-3.61	-0.27
206	SLU 11	-51	32	6188	-26.47	-1.52	-0.28
206	SLU 12	-93	32	6064	-26.61	-2.59	-0.28
206	SLU 13	-117	32	5931	-26.4	-3.19	-0.28
206	SLU 14	-35	33	6291	-27.22	-1.09	-0.29
206	SLU 15	-78	33	6168	-27.36	-2.17	-0.29
206	SLU 16	-31	32	6240	-26.92	-0.98	-0.29
206	SLU 17	-74	33	6116	-27.06	-2.05	-0.29
206	SLU 18	-76	33	6444	-27.05	-2.19	-0.29
206	SLU 19	-118	33	6320	-27.19	-3.26	-0.29
206	SLU 20	-60	34	6547	-27.8	-1.77	-0.3
206	SLU 21	-102	34	6423	-27.94	-2.84	-0.3
206	SLU 22	-44	31	5926	-25.35	-1.32	-0.27
206	SLU 23	-114	31	5720	-25.58	-3.1	-0.27
206	SLU 24	-32	32	6081	-26.41	-1.01	-0.28
206	SLU 25	-74	32	5957	-26.55	-2.08	-0.28
206	SLU 26	-98	32	5824	-26.33	-2.68	-0.28
206	SLU 27	-16	33	6184	-27.16	-0.58	-0.29
206	SLU 28	-58	33	6060	-27.3	-1.66	-0.29
206	SLU 29	-12	32	6133	-26.85	-0.47	-0.29
206	SLU 30	-54	32	6009	-26.99	-1.54	-0.29
206	SLU 31	-145	35	6678	-29.39	-3.95	-0.31
206	SLU 32	-63	36	7038	-30.21	-1.86	-0.32
206	SLU 33	-105	37	6914	-30.35	-2.93	-0.32
206	SLU 34	-129	36	6781	-30.14	-3.53	-0.32
206	SLU 35	-47	37	7141	-30.96	-1.43	-0.33
206	SLU 36	-89	37	7018	-31.1	-2.51	-0.33
206	SLU 37	-43	37	7090	-30.66	-1.32	-0.33
206	SLU 38	-85	37	6967	-30.79	-2.39	-0.33
206	SLU 39	-88	37	7294	-30.78	-2.53	-0.33
206	SLU 40	-130	37	7170	-30.92	-3.6	-0.33
206	SLU 41	-72	38	7397	-31.54	-2.11	-0.34
206	SLU 42	-114	38	7274	-31.67	-3.18	-0.34
206	SLU 43	-38	32	6307	-26.81	-1.15	-0.28
206	SLU 44	-108	33	6101	-27.04	-2.94	-0.29
206	SLU 45	-26	34	6462	-27.87	-0.84	-0.3
206	SLU 46	-68	34	6338	-28.01	-1.92	-0.3

Nodo	Cont.	Reazione a traslazione			Reazione a rotazione		
Ind.	N.br.	x	y	z	x	y	z
206	SLU 47	-92	33	6205	-27.79	-2.52	-0.29
206	SLU 48	-10	35	6565	-28.62	-0.42	-0.3
206	SLU 49	-52	35	6442	-28.76	-1.49	-0.31
206	SLU 50	-6	34	6514	-28.31	-0.31	-0.3
206	SLU 51	-48	34	6391	-28.45	-1.38	-0.3
206	SLU 52	-139	37	7059	-30.85	-3.79	-0.33
206	SLU 53	-57	38	7419	-31.67	-1.69	-0.34
206	SLU 54	-99	38	7296	-31.81	-2.77	-0.34
206	SLU 55	-123	38	7162	-31.6	-3.37	-0.34
206	SLU 56	-41	39	7523	-32.42	-1.27	-0.34
206	SLU 57	-83	39	7399	-32.56	-2.34	-0.35
206	SLU 58	-37	39	7471	-32.12	-1.15	-0.34
206	SLU 59	-79	39	7348	-32.26	-2.23	-0.34
206	SLU 60	-81	39	7675	-32.25	-2.37	-0.34
206	SLU 61	-124	39	7551	-32.39	-3.44	-0.34
206	SLU 62	-66	40	7778	-33	-1.94	-0.35
206	SLU 63	-108	40	7655	-33.14	-3.02	-0.35
206	SLU 64	-49	37	7158	-30.55	-1.49	-0.32
206	SLU 65	-119	37	6952	-30.78	-3.28	-0.33
206	SLU 66	-38	38	7312	-31.61	-1.18	-0.34
206	SLU 67	-80	38	7189	-31.75	-2.26	-0.34
206	SLU 68	-104	38	7055	-31.53	-2.86	-0.33
206	SLU 69	-22	39	7415	-32.36	-0.76	-0.34
206	SLU 70	-64	39	7292	-32.5	-1.83	-0.35
206	SLU 71	-18	39	7364	-32.05	-0.65	-0.34
206	SLU 72	-60	39	7241	-32.19	-1.72	-0.34
206	SLU 73	-150	42	7909	-34.59	-4.13	-0.37
206	SLU 74	-68	43	8269	-35.41	-2.03	-0.38
206	SLU 75	-110	43	8146	-35.55	-3.11	-0.38
206	SLU 76	-135	43	8012	-35.34	-3.71	-0.38
206	SLU 77	-53	44	8373	-36.16	-1.61	-0.38
206	SLU 78	-95	44	8249	-36.3	-2.68	-0.39
206	SLU 79	-49	43	8322	-35.86	-1.49	-0.38
206	SLU 80	-91	43	8198	-36	-2.57	-0.38
206	SLU 81	-93	43	8525	-35.99	-2.71	-0.38
206	SLU 82	-135	44	8402	-36.13	-3.78	-0.38
206	SLU 83	-77	44	8629	-36.74	-2.28	-0.39
206	SLU 84	-120	44	8505	-36.88	-3.36	-0.39
206	SLE RA 1	-35	27	5319	-22.68	-1.07	-0.24
206	SLE RA 2	-82	27	5182	-22.83	-2.27	-0.24
206	SLE RA 3	-28	28	5422	-23.38	-0.87	-0.25
206	SLE RA 4	-56	28	5340	-23.48	-1.58	-0.25
206	SLE RA 5	-72	28	5251	-23.33	-1.98	-0.25
206	SLE RA 6	-17	29	5491	-23.88	-0.58	-0.25
206	SLE RA 7	-45	29	5408	-23.98	-1.3	-0.25
206	SLE RA 8	-14	29	5457	-23.68	-0.51	-0.25
206	SLE RA 9	-42	29	5374	-23.77	-1.22	-0.25
206	SLE RA 10	-103	31	5820	-25.37	-2.83	-0.27
206	SLE RA 11	-48	31	6060	-25.92	-1.43	-0.28
206	SLE RA 12	-76	31	5978	-26.01	-2.15	-0.28
206	SLE RA 13	-92	31	5889	-25.87	-2.55	-0.27
206	SLE RA 14	-38	32	6129	-26.42	-1.15	-0.28
206	SLE RA 15	-66	32	6047	-26.51	-1.87	-0.28
206	SLE RA 16	-35	32	6095	-26.22	-1.07	-0.28
206	SLE RA 17	-63	32	6013	-26.31	-1.79	-0.28
206	SLE RA 18	-65	32	6231	-26.3	-1.88	-0.28
206	SLE RA 19	-93	32	6148	-26.4	-2.6	-0.28
206	SLE RA 20	-54	32	6300	-26.8	-1.6	-0.28
206	SLE RA 21	-82	32	6217	-26.9	-2.32	-0.29
206	SLE FR 1	-35	27	5319	-22.68	-1.07	-0.24
206	SLE FR 2	-45	27	5292	-22.71	-1.31	-0.24
206	SLE FR 3	-31	28	5347	-22.88	-0.96	-0.24
206	SLE FR 4	-53	29	5565	-23.8	-1.55	-0.25
206	SLE FR 5	-40	29	5620	-23.97	-1.2	-0.25
206	SLE FR 6	-50	30	5775	-24.49	-1.48	-0.26
206	SLE QP 1	-35	27	5319	-22.68	-1.07	-0.24
206	SLE QP 2	-44	29	5593	-23.77	-1.32	-0.25
206	SLD 1	945	39	4974	-31.2	25.85	-0.34
206	SLD 2	945	39	4974	-31.2	25.85	-0.34
206	SLD 3	1019	26	5275	-21.04	27.79	-0.23
206	SLD 4	1019	26	5275	-21.04	27.79	-0.23
206	SLD 5	141	50	4950	-41.41	3.88	-0.44
206	SLD 6	141	50	4950	-41.41	3.88	-0.44
206	SLD 7	387	9	5954	-7.53	10.36	-0.09
206	SLD 8	387	9	5954	-7.53	10.36	-0.09
206	SLD 9	-475	48	5231	-40	-13	-0.42
206	SLD 10	-475	48	5231	-40	-13	-0.42
206	SLD 11	-229	7	6235	-6.12	-6.52	-0.07
206	SLD 12	-229	7	6235	-6.12	-6.52	-0.07
206	SLD 13	-1107	31	5910	-26.49	-30.42	-0.27
206	SLD 14	-1107	31	5910	-26.49	-30.42	-0.27
206	SLD 15	-1033	19	6211	-16.33	-28.48	-0.17
206	SLD 16	-1033	19	6211	-16.33	-28.48	-0.17
206	SLV 1	2265	52	4126	-41.37	62.1	-0.45
206	SLV 2	2265	52	4126	-41.37	62.1	-0.45
206	SLV 3	2449	24	4864	-17.56	66.94	-0.21
206	SLV 4	2449	24	4864	-17.56	66.94	-0.21
206	SLV 5	370	79	4033	-65.16	10.37	-0.68
206	SLV 6	370	79	4033	-65.16	10.37	-0.68
206	SLV 7	983	-16	6494	14.2	26.5	0.13

Nodo	Cont.	Reazione a traslazione			Reazione a rotazione		
Ind.	N.br.	x	y	z	x	y	z
206	SLV 8	983	-16	6494	14.2	26.5	0.13
206	SLV 9	-1071	74	4691	-61.74	-29.13	-0.64
206	SLV 10	-1071	74	4691	-61.74	-29.13	-0.64
206	SLV 11	-458	-22	7152	17.62	-13	0.18
206	SLV 12	-458	-22	7152	17.62	-13	0.18
206	SLV 13	-2537	34	6321	-29.97	-69.57	-0.3
206	SLV 14	-2537	34	6321	-29.97	-69.57	-0.3
206	SLV 15	-2353	5	7059	-6.16	-64.73	-0.05
206	SLV 16	-2353	5	7059	-6.16	-64.73	-0.05
207	SLU 1	-157	14	5512	-12.9	-6.49	-0.22
207	SLU 2	-231	14	5227	-13.3	-8.64	-0.23
207	SLU 3	-149	14	5685	-13.54	-6.3	-0.23
207	SLU 4	-193	15	5514	-13.79	-7.59	-0.24
207	SLU 5	-218	15	5341	-13.77	-8.27	-0.24
207	SLU 6	-136	15	5799	-14.01	-5.93	-0.24
207	SLU 7	-181	15	5628	-14.25	-7.22	-0.25
207	SLU 8	-131	15	5740	-13.83	-5.75	-0.24
207	SLU 9	-176	15	5569	-14.07	-7.04	-0.25
207	SLU 10	-290	16	6259	-15.57	-10.83	-0.27
207	SLU 11	-208	17	6717	-15.82	-8.48	-0.27
207	SLU 12	-253	17	6546	-16.06	-9.77	-0.28
207	SLU 13	-278	17	6373	-16.04	-10.45	-0.28
207	SLU 14	-195	17	6831	-16.28	-8.11	-0.28
207	SLU 15	-240	18	6660	-16.53	-9.4	-0.29
207	SLU 16	-191	17	6772	-16.1	-7.93	-0.28
207	SLU 17	-235	17	6601	-16.34	-9.22	-0.29
207	SLU 18	-242	17	6986	-16.15	-9.61	-0.28
207	SLU 19	-286	17	6815	-16.39	-10.9	-0.29
207	SLU 20	-229	18	7100	-16.61	-9.24	-0.29
207	SLU 21	-273	18	6929	-16.85	-10.53	-0.29
207	SLU 22	-193	16	6437	-15.14	-7.92	-0.26
207	SLU 23	-267	16	6152	-15.54	-10.07	-0.27
207	SLU 24	-185	17	6610	-15.79	-7.73	-0.27
207	SLU 25	-229	17	6439	-16.03	-9.02	-0.28
207	SLU 26	-254	17	6266	-16.01	-9.7	-0.28
207	SLU 27	-172	17	6724	-16.25	-7.36	-0.28
207	SLU 28	-217	18	6553	-16.49	-8.65	-0.29
207	SLU 29	-167	17	6665	-16.07	-7.17	-0.28
207	SLU 30	-212	17	6494	-16.31	-8.47	-0.29
207	SLU 31	-327	19	7183	-17.82	-12.26	-0.31
207	SLU 32	-244	19	7641	-18.06	-9.91	-0.31
207	SLU 33	-289	19	7470	-18.3	-11.2	-0.32
207	SLU 34	-314	19	7297	-18.28	-11.88	-0.32
207	SLU 35	-231	20	7755	-18.52	-9.54	-0.32
207	SLU 36	-276	20	7584	-18.77	-10.83	-0.33
207	SLU 37	-227	19	7696	-18.34	-9.36	-0.32
207	SLU 38	-271	20	7525	-18.58	-10.65	-0.33
207	SLU 39	-278	20	7910	-18.39	-11.04	-0.32
207	SLU 40	-322	20	7739	-18.63	-12.33	-0.32
207	SLU 41	-265	20	8024	-18.85	-10.67	-0.33
207	SLU 42	-309	20	7853	-19.09	-11.96	-0.33
207	SLU 43	-191	17	6849	-16	-7.95	-0.27
207	SLU 44	-266	17	6564	-16.4	-10.1	-0.29
207	SLU 45	-183	18	7022	-16.64	-7.76	-0.29
207	SLU 46	-228	18	6851	-16.89	-9.05	-0.29
207	SLU 47	-253	18	6678	-16.87	-9.73	-0.3
207	SLU 48	-171	18	7136	-17.11	-7.38	-0.29
207	SLU 49	-215	18	6965	-17.35	-8.68	-0.3
207	SLU 50	-166	18	7077	-16.93	-7.2	-0.29
207	SLU 51	-211	18	6906	-17.17	-8.49	-0.3
207	SLU 52	-325	20	7596	-18.67	-12.28	-0.33
207	SLU 53	-243	20	8054	-18.92	-9.94	-0.33
207	SLU 54	-287	20	7883	-19.16	-11.23	-0.33
207	SLU 55	-312	20	7710	-19.14	-11.91	-0.34
207	SLU 56	-230	21	8168	-19.38	-9.57	-0.33
207	SLU 57	-275	21	7997	-19.63	-10.86	-0.34
207	SLU 58	-225	20	8109	-19.2	-9.39	-0.33
207	SLU 59	-270	21	7938	-19.44	-10.68	-0.34
207	SLU 60	-276	20	8323	-19.25	-11.07	-0.33
207	SLU 61	-321	21	8152	-19.49	-12.36	-0.34
207	SLU 62	-263	21	8437	-19.71	-10.7	-0.34
207	SLU 63	-308	21	8266	-19.95	-11.99	-0.35
207	SLU 64	-228	19	7774	-18.24	-9.38	-0.31
207	SLU 65	-302	20	7489	-18.64	-11.53	-0.33
207	SLU 66	-220	20	7947	-18.89	-9.19	-0.32
207	SLU 67	-264	20	7776	-19.13	-10.48	-0.33
207	SLU 68	-289	20	7603	-19.11	-11.16	-0.34
207	SLU 69	-207	21	8061	-19.35	-8.81	-0.33
207	SLU 70	-251	21	7890	-19.59	-10.1	-0.34
207	SLU 71	-202	20	8001	-19.17	-8.63	-0.33
207	SLU 72	-247	21	7830	-19.41	-9.92	-0.34
207	SLU 73	-361	22	8520	-20.92	-13.71	-0.37
207	SLU 74	-279	23	8978	-21.16	-11.37	-0.36
207	SLU 75	-323	23	8807	-21.4	-12.66	-0.37
207	SLU 76	-348	23	8634	-21.38	-13.34	-0.37
207	SLU 77	-266	23	9092	-21.63	-11	-0.37
207	SLU 78	-311	23	8921	-21.87	-12.29	-0.38
207	SLU 79	-261	23	9033	-21.44	-10.82	-0.37
207	SLU 80	-306	23	8862	-21.68	-12.11	-0.38
207	SLU 81	-312	23	9247	-21.49	-12.5	-0.37

Nodo	Cont.	Reazione a traslazione			Reazione a rotazione		
Ind.	N.br.	x	y	z	x	y	z
207	SLU 82	-357	23	9076	-21.73	-13.79	-0.38
207	SLU 83	-300	23	9361	-21.95	-12.13	-0.38
207	SLU 84	-344	24	9190	-22.19	-13.42	-0.39
207	SLE RA 1	-167	14	5777	-13.54	-6.9	-0.23
207	SLE RA 2	-217	15	5587	-13.81	-8.33	-0.24
207	SLE RA 3	-162	15	5892	-13.97	-6.77	-0.24
207	SLE RA 4	-191	15	5778	-14.13	-7.63	-0.25
207	SLE RA 5	-208	15	5662	-14.12	-8.09	-0.25
207	SLE RA 6	-153	15	5968	-14.28	-6.52	-0.25
207	SLE RA 7	-183	15	5854	-14.44	-7.38	-0.25
207	SLE RA 8	-150	15	5928	-14.16	-6.4	-0.24
207	SLE RA 9	-180	15	5814	-14.32	-7.26	-0.25
207	SLE RA 10	-256	16	6274	-15.32	-9.79	-0.27
207	SLE RA 11	-201	16	6580	-15.49	-8.23	-0.27
207	SLE RA 12	-231	17	6466	-15.65	-9.09	-0.27
207	SLE RA 13	-248	17	6350	-15.63	-9.54	-0.27
207	SLE RA 14	-193	17	6656	-15.79	-7.98	-0.27
207	SLE RA 15	-223	17	6542	-15.96	-8.84	-0.28
207	SLE RA 16	-190	17	6616	-15.67	-7.86	-0.27
207	SLE RA 17	-219	17	6502	-15.83	-8.72	-0.28
207	SLE RA 18	-224	17	6759	-15.7	-8.98	-0.27
207	SLE RA 19	-253	17	6645	-15.86	-9.84	-0.28
207	SLE RA 20	-215	17	6835	-16.01	-8.73	-0.28
207	SLE RA 21	-245	17	6721	-16.17	-9.59	-0.28
207	SLE FR 1	-167	14	5777	-13.54	-6.9	-0.23
207	SLE FR 2	-177	14	5739	-13.59	-7.19	-0.23
207	SLE FR 3	-164	15	5807	-13.66	-6.8	-0.23
207	SLE FR 4	-194	15	6033	-14.24	-7.81	-0.25
207	SLE FR 5	-181	15	6102	-14.31	-7.42	-0.25
207	SLE FR 6	-195	16	6268	-14.62	-7.94	-0.25
207	SLE QP 1	-167	14	5777	-13.54	-6.9	-0.23
207	SLE QP 2	-184	15	6071	-14.19	-7.52	-0.24
207	SLD 1	777	24	5158	-20.01	24.36	-0.39
207	SLD 2	777	24	5158	-20.01	24.36	-0.39
207	SLD 3	855	16	5552	-12.89	26.73	-0.24
207	SLD 4	855	16	5552	-12.89	26.73	-0.24
207	SLD 5	-14	30	5200	-26.73	-1.54	-0.5
207	SLD 6	-14	30	5200	-26.73	-1.54	-0.5
207	SLD 7	246	4	6513	-3	6.33	-0.03
207	SLD 8	246	4	6513	-3	6.33	-0.03
207	SLD 9	-614	27	5630	-25.37	-21.38	-0.46
207	SLD 10	-614	27	5630	-25.37	-21.38	-0.46
207	SLD 11	-354	1	6943	-1.64	-13.51	0.01
207	SLD 12	-354	1	6943	-1.64	-13.51	0.01
207	SLD 13	-1223	14	6591	-15.48	-41.77	-0.24
207	SLD 14	-1223	14	6591	-15.48	-41.77	-0.24
207	SLD 15	-1145	6	6985	-8.36	-39.41	-0.1
207	SLD 16	-1145	6	6985	-8.36	-39.41	-0.1
207	SLV 1	2058	36	3908	-28.02	66.91	-0.58
207	SLV 2	2058	36	3908	-28.02	66.91	-0.58
207	SLV 3	2253	18	4876	-11.33	72.8	-0.25
207	SLV 4	2253	18	4876	-11.33	72.8	-0.25
207	SLV 5	193	49	3954	-43.64	5.87	-0.85
207	SLV 6	193	49	3954	-43.64	5.87	-0.85
207	SLV 7	843	-12	7181	11.97	25.51	0.26
207	SLV 8	843	-12	7181	11.97	25.51	0.26
207	SLV 9	-1211	42	4962	-40.35	-40.56	-0.75
207	SLV 10	-1211	42	4962	-40.35	-40.56	-0.75
207	SLV 11	-561	-19	8188	15.26	-20.92	0.36
207	SLV 12	-561	-19	8188	15.26	-20.92	0.36
207	SLV 13	-2621	12	7266	-17.04	-87.85	-0.24
207	SLV 14	-2621	12	7266	-17.04	-87.85	-0.24
207	SLV 15	-2426	-6	8234	-0.36	-81.96	0.09
207	SLV 16	-2426	-6	8234	-0.36	-81.96	0.09
208	SLU 1	-338	-2	6182	-3.76	-18.56	0.32
208	SLU 2	-421	0	5760	-4.55	-20.44	0.31
208	SLU 3	-338	-2	6379	-4	-18.68	0.34
208	SLU 4	-387	-1	6126	-4.47	-19.81	0.33
208	SLU 5	-415	0	5885	-4.73	-20.23	0.32
208	SLU 6	-332	-2	6504	-4.18	-18.47	0.35
208	SLU 7	-381	-1	6251	-4.65	-19.6	0.34
208	SLU 8	-326	-2	6433	-4.13	-18.15	0.35
208	SLU 9	-376	-1	6179	-4.6	-19.28	0.34
208	SLU 10	-517	-1	6904	-5.25	-25.11	0.37
208	SLU 11	-434	-2	7523	-4.7	-23.35	0.4
208	SLU 12	-484	-1	7270	-5.18	-24.48	0.39
208	SLU 13	-511	-1	7029	-5.43	-24.91	0.38
208	SLU 14	-428	-2	7648	-4.89	-23.15	0.41
208	SLU 15	-478	-1	7395	-5.36	-24.28	0.4
208	SLU 16	-422	-2	7577	-4.83	-22.82	0.4
208	SLU 17	-472	-1	7324	-5.3	-23.95	0.4
208	SLU 18	-476	-3	7817	-4.77	-25.23	0.41
208	SLU 19	-525	-2	7563	-5.24	-26.36	0.4
208	SLU 20	-470	-3	7942	-4.95	-25.03	0.42
208	SLU 21	-519	-1	7689	-5.42	-26.16	0.41
208	SLU 22	-408	-2	7215	-4.47	-22.13	0.38
208	SLU 23	-491	-1	6793	-5.26	-24.02	0.37
208	SLU 24	-408	-2	7412	-4.71	-22.25	0.4
208	SLU 25	-457	-1	7159	-5.18	-23.38	0.39
208	SLU 26	-485	-1	6918	-5.44	-23.81	0.38

Nodo	Cont.	Reazione a traslazione			Reazione a rotazione		
Ind.	N.br.	x	y	z	x	y	z
208	SLU 27	-402	-2	7537	-4.89	-22.05	0.41
208	SLU 28	-451	-1	7284	-5.36	-23.18	0.4
208	SLU 29	-396	-2	7466	-4.84	-21.72	0.4
208	SLU 30	-446	-1	7212	-5.31	-22.85	0.4
208	SLU 31	-587	-1	7937	-5.96	-28.69	0.43
208	SLU 32	-504	-3	8556	-5.41	-26.93	0.45
208	SLU 33	-554	-2	8303	-5.89	-28.06	0.45
208	SLU 34	-581	-1	8062	-6.14	-28.49	0.44
208	SLU 35	-498	-3	8681	-5.6	-26.72	0.47
208	SLU 36	-548	-2	8428	-6.07	-27.85	0.46
208	SLU 37	-492	-3	8610	-5.54	-26.4	0.46
208	SLU 38	-542	-1	8357	-6.01	-27.53	0.45
208	SLU 39	-546	-3	8850	-5.48	-28.81	0.46
208	SLU 40	-595	-2	8596	-5.95	-29.94	0.46
208	SLU 41	-540	-3	8975	-5.66	-28.61	0.47
208	SLU 42	-589	-2	8722	-6.13	-29.74	0.47
208	SLU 43	-416	-3	7683	-4.65	-22.9	0.4
208	SLU 44	-498	-1	7261	-5.43	-24.78	0.39
208	SLU 45	-415	-3	7879	-4.89	-23.02	0.42
208	SLU 46	-465	-2	7626	-5.36	-24.15	0.41
208	SLU 47	-492	-1	7386	-5.62	-24.57	0.4
208	SLU 48	-409	-3	8005	-5.07	-22.81	0.43
208	SLU 49	-459	-2	7751	-5.54	-23.94	0.42
208	SLU 50	-404	-3	7933	-5.01	-22.49	0.42
208	SLU 51	-453	-2	7680	-5.48	-23.62	0.42
208	SLU 52	-595	-1	8405	-6.14	-29.45	0.45
208	SLU 53	-511	-3	9023	-5.59	-27.69	0.48
208	SLU 54	-561	-2	8770	-6.06	-28.82	0.47
208	SLU 55	-589	-1	8530	-6.32	-29.25	0.46
208	SLU 56	-505	-3	9149	-5.77	-27.49	0.49
208	SLU 57	-555	-2	8896	-6.24	-28.62	0.48
208	SLU 58	-500	-3	9077	-5.72	-27.16	0.48
208	SLU 59	-549	-2	8824	-6.19	-28.29	0.47
208	SLU 60	-553	-3	9317	-5.65	-29.57	0.49
208	SLU 61	-603	-2	9064	-6.12	-30.7	0.48
208	SLU 62	-547	-3	9442	-5.83	-29.37	0.5
208	SLU 63	-597	-2	9189	-6.31	-30.5	0.49
208	SLU 64	-486	-3	8716	-5.36	-26.47	0.46
208	SLU 65	-568	-1	8294	-6.14	-28.36	0.45
208	SLU 66	-485	-3	8912	-5.6	-26.59	0.48
208	SLU 67	-535	-2	8659	-6.07	-27.72	0.47
208	SLU 68	-562	-1	8419	-6.33	-28.15	0.46
208	SLU 69	-479	-3	9038	-5.78	-26.39	0.49
208	SLU 70	-529	-2	8784	-6.25	-27.52	0.48
208	SLU 71	-474	-3	8966	-5.72	-26.06	0.48
208	SLU 72	-523	-2	8713	-6.19	-27.19	0.47
208	SLU 73	-665	-1	9438	-6.85	-33.03	0.5
208	SLU 74	-581	-3	10056	-6.3	-31.27	0.53
208	SLU 75	-631	-2	9803	-6.77	-32.4	0.53
208	SLU 76	-659	-1	9563	-7.03	-32.83	0.52
208	SLU 77	-575	-3	10182	-6.48	-31.06	0.54
208	SLU 78	-625	-2	9928	-6.95	-32.19	0.54
208	SLU 79	-570	-3	10110	-6.43	-30.74	0.54
208	SLU 80	-619	-2	9857	-6.9	-31.87	0.53
208	SLU 81	-623	-3	10350	-6.36	-33.15	0.54
208	SLU 82	-673	-2	10097	-6.83	-34.28	0.53
208	SLU 83	-617	-3	10475	-6.55	-32.95	0.55
208	SLU 84	-667	-2	10222	-7.02	-34.08	0.55
208	SLE RA 1	-358	-2	6477	-3.97	-19.58	0.34
208	SLE RA 2	-413	-1	6196	-4.49	-20.83	0.33
208	SLE RA 3	-358	-2	6608	-4.13	-19.66	0.35
208	SLE RA 4	-391	-2	6440	-4.44	-20.41	0.35
208	SLE RA 5	-409	-1	6279	-4.61	-20.7	0.34
208	SLE RA 6	-354	-2	6692	-4.25	-19.52	0.36
208	SLE RA 7	-387	-1	6523	-4.56	-20.27	0.35
208	SLE RA 8	-350	-2	6644	-4.21	-19.3	0.36
208	SLE RA 9	-383	-1	6475	-4.52	-20.06	0.35
208	SLE RA 10	-478	-1	6959	-4.96	-23.95	0.37
208	SLE RA 11	-422	-2	7371	-4.59	-22.77	0.39
208	SLE RA 12	-455	-2	7202	-4.91	-23.53	0.38
208	SLE RA 13	-474	-1	7042	-5.08	-23.81	0.38
208	SLE RA 14	-418	-2	7455	-4.71	-22.64	0.4
208	SLE RA 15	-451	-2	7286	-5.03	-23.39	0.39
208	SLE RA 16	-414	-2	7407	-4.68	-22.42	0.39
208	SLE RA 17	-447	-2	7238	-4.99	-23.17	0.39
208	SLE RA 18	-450	-3	7567	-4.64	-24.03	0.4
208	SLE RA 19	-483	-2	7398	-4.95	-24.78	0.39
208	SLE RA 20	-446	-3	7650	-4.76	-23.89	0.4
208	SLE RA 21	-479	-2	7482	-5.07	-24.65	0.4
208	SLE FR 1	-358	-2	6477	-3.97	-19.58	0.34
208	SLE FR 2	-369	-2	6421	-4.07	-19.83	0.34
208	SLE FR 3	-357	-2	6511	-4.02	-19.52	0.34
208	SLE FR 4	-397	-2	6748	-4.27	-21.16	0.36
208	SLE FR 5	-384	-2	6838	-4.22	-20.86	0.36
208	SLE FR 6	-404	-2	7022	-4.3	-21.8	0.37
208	SLE QP 1	-358	-2	6477	-3.97	-19.58	0.34
208	SLE QP 2	-386	-2	6804	-4.17	-20.91	0.36
208	SLD 1	433	5	5310	-7.9	17.41	0.34
208	SLD 2	433	5	5310	-7.9	17.41	0.34
208	SLD 3	518	-1	5895	-3.69	19.98	0.26

Nodo	Cont.	Reazione a traslazione			Reazione a rotazione		
Ind.	N.br.	x	y	z	x	y	z
208	SLD 4	518	-1	5895	-3.69	19.98	0.26
208	SLD 5	-270	9	5469	-11.68	-13.32	0.46
208	SLD 6	-270	9	5469	-11.68	-13.32	0.46
208	SLD 7	15	-11	7418	2.36	-4.74	0.21
208	SLD 8	15	-11	7418	2.36	-4.74	0.21
208	SLD 9	-786	6	6190	-10.7	-37.08	0.5
208	SLD 10	-786	6	6190	-10.7	-37.08	0.5
208	SLD 11	-502	-14	8139	3.34	-28.51	0.25
208	SLD 12	-502	-14	8139	3.34	-28.51	0.25
208	SLD 13	-1290	-4	7714	-4.64	-61.81	0.45
208	SLD 14	-1290	-4	7714	-4.64	-61.81	0.45
208	SLD 15	-1204	-10	8298	-0.43	-59.23	0.38
208	SLD 16	-1204	-10	8298	-0.43	-59.23	0.38
208	SLV 1	1523	16	3273	-13.04	68.6	0.3
208	SLV 2	1523	16	3273	-13.04	68.6	0.3
208	SLV 3	1737	2	4706	-3.14	74.93	0.13
208	SLV 4	1737	2	4706	-3.14	74.93	0.13
208	SLV 5	-136	25	3572	-21.84	-3.65	0.61
208	SLV 6	-136	25	3572	-21.84	-3.65	0.61
208	SLV 7	575	-23	8348	11.15	17.43	0.02
208	SLV 8	575	-23	8348	11.15	17.43	0.02
208	SLV 9	-1346	18	5261	-19.49	-59.26	0.7
208	SLV 10	-1346	18	5261	-19.49	-59.26	0.7
208	SLV 11	-635	-30	10037	13.51	-38.17	0.11
208	SLV 12	-635	-30	10037	13.51	-38.17	0.11
208	SLV 13	-2508	-7	8903	-5.2	-116.75	0.59
208	SLV 14	-2508	-7	8903	-5.2	-116.75	0.59
208	SLV 15	-2295	-21	10336	4.7	-110.43	0.41
208	SLV 16	-2295	-21	10336	4.7	-110.43	0.41
209	SLU 1	-385	-990	7572	36.11	-25	-0.03
209	SLU 2	-414	-828	6935	30.14	-25.34	-0.03
209	SLU 3	-392	-1023	7812	37.43	-25.56	-0.03
209	SLU 4	-409	-926	7429	33.85	-25.76	-0.03
209	SLU 5	-415	-849	7081	30.98	-25.54	-0.03
209	SLU 6	-393	-1044	7958	38.27	-25.76	-0.03
209	SLU 7	-410	-947	7576	34.69	-25.96	-0.03
209	SLU 8	-388	-1031	7865	37.8	-25.4	-0.03
209	SLU 9	-405	-934	7483	34.21	-25.6	-0.03
209	SLU 10	-503	-988	8317	36	-30.76	-0.04
209	SLU 11	-482	-1184	9194	43.3	-30.98	-0.04
209	SLU 12	-499	-1086	8812	39.71	-31.18	-0.04
209	SLU 13	-505	-1009	8464	36.85	-30.96	-0.03
209	SLU 14	-483	-1204	9341	44.14	-31.18	-0.04
209	SLU 15	-500	-1107	8958	40.55	-31.38	-0.04
209	SLU 16	-477	-1192	9247	43.66	-30.82	-0.04
209	SLU 17	-494	-1094	8865	40.08	-31.02	-0.03
209	SLU 18	-513	-1219	9547	44.49	-32.74	-0.04
209	SLU 19	-530	-1122	9165	40.91	-32.95	-0.04
209	SLU 20	-515	-1240	9693	45.33	-32.94	-0.04
209	SLU 21	-532	-1142	9311	41.75	-33.15	-0.04
209	SLU 22	-457	-1142	8826	41.77	-29.53	-0.04
209	SLU 23	-486	-980	8189	35.79	-29.87	-0.03
209	SLU 24	-464	-1175	9066	43.09	-30.09	-0.04
209	SLU 25	-481	-1078	8684	39.5	-30.29	-0.03
209	SLU 26	-487	-1001	8336	36.64	-30.07	-0.03
209	SLU 27	-465	-1196	9212	43.93	-30.28	-0.03
209	SLU 28	-483	-1099	8830	40.34	-30.49	-0.03
209	SLU 29	-460	-1183	9119	43.45	-29.93	-0.03
209	SLU 30	-477	-1086	8737	39.87	-30.13	-0.03
209	SLU 31	-576	-1140	9572	41.66	-35.29	-0.04
209	SLU 32	-554	-1336	10448	48.95	-35.5	-0.04
209	SLU 33	-571	-1238	10066	45.37	-35.71	-0.04
209	SLU 34	-577	-1161	9718	42.5	-35.49	-0.04
209	SLU 35	-555	-1356	10595	49.79	-35.7	-0.04
209	SLU 36	-572	-1259	10212	46.21	-35.91	-0.04
209	SLU 37	-550	-1344	10501	49.32	-35.35	-0.04
209	SLU 38	-567	-1246	10119	45.73	-35.55	-0.04
209	SLU 39	-586	-1371	10801	50.15	-37.27	-0.05
209	SLU 40	-603	-1274	10419	46.56	-37.48	-0.04
209	SLU 41	-587	-1392	10948	50.99	-37.47	-0.05
209	SLU 42	-604	-1295	10565	47.4	-37.67	-0.04
209	SLU 43	-476	-1235	9414	45.01	-30.95	-0.04
209	SLU 44	-504	-1073	8777	39.03	-31.29	-0.04
209	SLU 45	-483	-1268	9653	46.33	-31.51	-0.04
209	SLU 46	-500	-1171	9271	42.74	-31.71	-0.04
209	SLU 47	-506	-1093	8923	39.87	-31.49	-0.04
209	SLU 48	-484	-1289	9800	47.17	-31.7	-0.04
209	SLU 49	-501	-1191	9417	43.58	-31.91	-0.04
209	SLU 50	-478	-1276	9706	46.69	-31.35	-0.04
209	SLU 51	-495	-1179	9324	43.11	-31.55	-0.04
209	SLU 52	-594	-1233	10159	44.9	-36.71	-0.04
209	SLU 53	-572	-1428	11036	52.19	-36.92	-0.05
209	SLU 54	-589	-1331	10653	48.61	-37.13	-0.04
209	SLU 55	-595	-1254	10305	45.74	-36.91	-0.04
209	SLU 56	-574	-1449	11182	53.03	-37.12	-0.05
209	SLU 57	-591	-1352	10800	49.45	-37.33	-0.04
209	SLU 58	-568	-1436	11089	52.56	-36.77	-0.04
209	SLU 59	-585	-1339	10707	48.97	-36.97	-0.04
209	SLU 60	-604	-1464	11389	53.39	-38.69	-0.05
209	SLU 61	-621	-1367	11006	49.8	-38.89	-0.05

Nodo	Cont.	Reazione a traslazione			Reazione a rotazione		
Ind.	N.br.	x	y	z	x	y	z
209	SLU 62	-605	-1484	11535	54.23	-38.89	-0.05
209	SLU 63	-622	-1387	11153	50.64	-39.09	-0.05
209	SLU 64	-548	-1387	10668	50.66	-35.48	-0.04
209	SLU 65	-577	-1225	10031	44.69	-35.82	-0.04
209	SLU 66	-555	-1420	10907	51.98	-36.03	-0.04
209	SLU 67	-572	-1323	10525	48.4	-36.24	-0.04
209	SLU 68	-578	-1246	10177	45.53	-36.02	-0.04
209	SLU 69	-556	-1441	11054	52.82	-36.23	-0.04
209	SLU 70	-573	-1344	10672	49.24	-36.44	-0.04
209	SLU 71	-551	-1428	10961	52.35	-35.88	-0.04
209	SLU 72	-568	-1331	10578	48.76	-36.08	-0.04
209	SLU 73	-667	-1385	11413	50.55	-41.24	-0.05
209	SLU 74	-645	-1581	12290	57.85	-41.45	-0.05
209	SLU 75	-662	-1483	11908	54.26	-41.66	-0.05
209	SLU 76	-668	-1406	11560	51.4	-41.44	-0.05
209	SLU 77	-646	-1601	12436	58.69	-41.65	-0.05
209	SLU 78	-663	-1504	12054	55.1	-41.86	-0.05
209	SLU 79	-640	-1589	12343	58.21	-41.3	-0.05
209	SLU 80	-658	-1491	11961	54.63	-41.5	-0.05
209	SLU 81	-676	-1616	12643	59.04	-43.22	-0.05
209	SLU 82	-694	-1519	12261	55.46	-43.42	-0.05
209	SLU 83	-678	-1637	12789	59.88	-43.42	-0.05
209	SLU 84	-695	-1539	12407	56.3	-43.62	-0.05
209	SLE RA 1	-406	-1034	7930	37.73	-26.3	-0.03
209	SLE RA 2	-425	-925	7506	33.75	-26.52	-0.03
209	SLE RA 3	-410	-1056	8090	38.61	-26.67	-0.03
209	SLE RA 4	-422	-991	7835	36.22	-26.8	-0.03
209	SLE RA 5	-426	-939	7603	34.31	-26.65	-0.03
209	SLE RA 6	-411	-1069	8188	39.17	-26.8	-0.03
209	SLE RA 7	-423	-1005	7933	36.78	-26.93	-0.03
209	SLE RA 8	-407	-1061	8126	38.85	-26.56	-0.03
209	SLE RA 9	-419	-996	7871	36.46	-26.7	-0.03
209	SLE RA 10	-485	-1032	8427	37.66	-30.13	-0.04
209	SLE RA 11	-470	-1163	9012	42.52	-30.28	-0.04
209	SLE RA 12	-481	-1098	8757	40.13	-30.41	-0.04
209	SLE RA 13	-485	-1046	8525	38.22	-30.27	-0.04
209	SLE RA 14	-471	-1176	9109	43.08	-30.41	-0.04
209	SLE RA 15	-482	-1111	8855	40.69	-30.55	-0.04
209	SLE RA 16	-467	-1168	9047	42.76	-30.17	-0.04
209	SLE RA 17	-479	-1103	8792	40.37	-30.31	-0.04
209	SLE RA 18	-491	-1186	9247	43.31	-31.46	-0.04
209	SLE RA 19	-503	-1121	8992	40.92	-31.59	-0.04
209	SLE RA 20	-492	-1200	9345	43.88	-31.59	-0.04
209	SLE RA 21	-503	-1135	9090	41.49	-31.73	-0.04
209	SLE FR 1	-406	-1034	7930	37.73	-26.3	-0.03
209	SLE FR 2	-410	-1012	7845	36.93	-26.34	-0.03
209	SLE FR 3	-406	-1039	7969	37.95	-26.35	-0.03
209	SLE FR 4	-435	-1058	8240	38.61	-27.89	-0.03
209	SLE FR 5	-432	-1085	8364	39.63	-27.9	-0.04
209	SLE FR 6	-449	-1110	8589	40.52	-28.88	-0.04
209	SLE QP 1	-406	-1034	7930	37.73	-26.3	-0.03
209	SLE QP 2	-431	-1079	8325	39.4	-27.84	-0.04
209	SLD 1	46	-853	5934	30.86	-3.32	0.04
209	SLD 2	46	-853	5934	30.86	-3.32	0.04
209	SLD 3	81	-1081	6833	39.73	-1.64	0.02
209	SLD 4	81	-1081	6833	39.73	-1.64	0.02
209	SLD 5	-341	-666	6245	23.38	-23.03	0.02
209	SLD 6	-341	-666	6245	23.38	-23.03	0.02
209	SLD 7	-225	-1425	9240	52.96	-17.43	-0.06
209	SLD 8	-225	-1425	9240	52.96	-17.43	-0.06
209	SLD 9	-638	-733	7410	25.85	-38.25	-0.01
209	SLD 10	-638	-733	7410	25.85	-38.25	-0.01
209	SLD 11	-522	-1493	10406	55.42	-32.65	-0.09
209	SLD 12	-522	-1493	10406	55.42	-32.65	-0.09
209	SLD 13	-944	-1078	9818	39.08	-54.05	-0.09
209	SLD 14	-944	-1078	9818	39.08	-54.05	-0.09
209	SLD 15	-909	-1306	10717	47.95	-52.37	-0.11
209	SLD 16	-909	-1306	10717	47.95	-52.37	-0.11
209	SLV 1	684	-534	2679	18.82	29.49	0.14
209	SLV 2	684	-534	2679	18.82	29.49	0.14
209	SLV 3	770	-1088	4875	40.36	33.53	0.08
209	SLV 4	770	-1088	4875	40.36	33.53	0.08
209	SLV 5	-227	-75	3301	0.55	-16.77	0.1
209	SLV 6	-227	-75	3301	0.55	-16.77	0.1
209	SLV 7	59	-1923	10621	72.37	-3.31	-0.09
209	SLV 8	59	-1923	10621	72.37	-3.31	-0.09
209	SLV 9	-922	-236	6030	6.44	-52.38	0.01
209	SLV 10	-922	-236	6030	6.44	-52.38	0.01
209	SLV 11	-636	-2083	13350	78.26	-38.92	-0.17
209	SLV 12	-636	-2083	13350	78.26	-38.92	-0.17
209	SLV 13	-1633	-1070	11776	38.45	-89.22	-0.15
209	SLV 14	-1633	-1070	11776	38.45	-89.22	-0.15
209	SLV 15	-1547	-1625	13972	59.99	-85.18	-0.21
209	SLV 16	-1547	-1625	13972	59.99	-85.18	-0.21
210	SLU 1	-710	-22	1613	1.98	-6.55	0.63
210	SLU 2	-660	-20	1493	1.71	-6.26	0.53
210	SLU 3	-731	-22	1662	2.06	-6.72	0.65
210	SLU 4	-701	-22	1589	1.89	-6.55	0.59
210	SLU 5	-672	-21	1521	1.76	-6.34	0.54
210	SLU 6	-743	-23	1690	2.1	-6.8	0.66

Nodo	Cont.	Reazione a traslazione			Reazione a rotazione		
Ind.	N.br.	x	y	z	x	y	z
210	SLU 7	-713	-22	1618	1.94	-6.63	0.61
210	SLU 8	-734	-23	1669	2.08	-6.71	0.66
210	SLU 9	-704	-22	1597	1.91	-6.54	0.6
210	SLU 10	-795	-24	1797	2.03	-7.57	0.63
210	SLU 11	-867	-26	1966	2.38	-8.03	0.75
210	SLU 12	-836	-25	1893	2.21	-7.86	0.69
210	SLU 13	-807	-24	1825	2.08	-7.65	0.64
210	SLU 14	-879	-27	1994	2.43	-8.11	0.77
210	SLU 15	-848	-26	1922	2.26	-7.94	0.71
210	SLU 16	-869	-26	1973	2.4	-8.02	0.76
210	SLU 17	-839	-26	1901	2.24	-7.85	0.7
210	SLU 18	-903	-27	2047	2.44	-8.42	0.77
210	SLU 19	-873	-26	1975	2.28	-8.25	0.71
210	SLU 20	-915	-27	2075	2.49	-8.5	0.79
210	SLU 21	-885	-27	2003	2.33	-8.33	0.73
210	SLU 22	-831	-25	1885	2.29	-7.68	0.72
210	SLU 23	-780	-24	1765	2.02	-7.39	0.63
210	SLU 24	-852	-26	1934	2.37	-7.85	0.75
210	SLU 25	-822	-25	1861	2.2	-7.68	0.69
210	SLU 26	-792	-24	1793	2.07	-7.47	0.64
210	SLU 27	-864	-27	1962	2.42	-7.93	0.76
210	SLU 28	-834	-26	1890	2.25	-7.76	0.7
210	SLU 29	-855	-26	1941	2.39	-7.84	0.75
210	SLU 30	-824	-26	1869	2.23	-7.67	0.69
210	SLU 31	-915	-27	2069	2.34	-8.7	0.73
210	SLU 32	-987	-30	2238	2.69	-9.16	0.85
210	SLU 33	-957	-29	2166	2.53	-8.99	0.79
210	SLU 34	-927	-28	2097	2.39	-8.78	0.74
210	SLU 35	-999	-30	2266	2.74	-9.24	0.86
210	SLU 36	-969	-29	2194	2.58	-9.07	0.8
210	SLU 37	-990	-30	2245	2.71	-9.15	0.85
210	SLU 38	-960	-29	2173	2.55	-8.98	0.79
210	SLU 39	-1024	-30	2319	2.75	-9.55	0.87
210	SLU 40	-993	-29	2247	2.59	-9.38	0.81
210	SLU 41	-1036	-31	2347	2.8	-9.63	0.88
210	SLU 42	-1005	-30	2275	2.64	-9.46	0.82
210	SLU 43	-882	-27	2003	2.47	-8.13	0.78
210	SLU 44	-831	-26	1883	2.2	-7.84	0.69
210	SLU 45	-903	-28	2052	2.54	-8.3	0.81
210	SLU 46	-873	-27	1980	2.38	-8.12	0.75
210	SLU 47	-843	-26	1911	2.24	-7.92	0.7
210	SLU 48	-915	-28	2080	2.59	-8.38	0.82
210	SLU 49	-885	-28	2008	2.43	-8.2	0.76
210	SLU 50	-906	-28	2060	2.57	-8.29	0.81
210	SLU 51	-876	-27	1987	2.4	-8.12	0.75
210	SLU 52	-967	-29	2187	2.52	-9.15	0.79
210	SLU 53	-1038	-31	2356	2.87	-9.61	0.91
210	SLU 54	-1008	-31	2284	2.7	-9.43	0.85
210	SLU 55	-979	-30	2215	2.57	-9.23	0.8
210	SLU 56	-1050	-32	2384	2.92	-9.69	0.92
210	SLU 57	-1020	-31	2312	2.75	-9.51	0.86
210	SLU 58	-1041	-32	2364	2.89	-9.6	0.91
210	SLU 59	-1011	-31	2291	2.72	-9.43	0.85
210	SLU 60	-1075	-32	2438	2.93	-10	0.93
210	SLU 61	-1045	-31	2365	2.77	-9.83	0.87
210	SLU 62	-1087	-33	2466	2.98	-10.08	0.94
210	SLU 63	-1057	-32	2394	2.81	-9.91	0.88
210	SLU 64	-1002	-30	2275	2.78	-9.26	0.88
210	SLU 65	-952	-29	2155	2.51	-8.97	0.78
210	SLU 66	-1024	-31	2324	2.85	-9.43	0.9
210	SLU 67	-993	-30	2252	2.69	-9.25	0.84
210	SLU 68	-964	-30	2183	2.56	-9.05	0.8
210	SLU 69	-1036	-32	2352	2.9	-9.51	0.92
210	SLU 70	-1005	-31	2280	2.74	-9.34	0.86
210	SLU 71	-1026	-32	2332	2.88	-9.42	0.91
210	SLU 72	-996	-31	2260	2.71	-9.25	0.85
210	SLU 73	-1087	-33	2459	2.83	-10.28	0.88
210	SLU 74	-1159	-35	2628	3.18	-10.74	1
210	SLU 75	-1128	-34	2556	3.01	-10.56	0.94
210	SLU 76	-1099	-33	2487	2.88	-10.36	0.9
210	SLU 77	-1171	-35	2656	3.23	-10.82	1.02
210	SLU 78	-1140	-35	2584	3.06	-10.64	0.96
210	SLU 79	-1162	-35	2636	3.2	-10.73	1.01
210	SLU 80	-1131	-34	2564	3.04	-10.56	0.95
210	SLU 81	-1195	-35	2710	3.24	-11.13	1.02
210	SLU 82	-1165	-35	2638	3.08	-10.96	0.96
210	SLU 83	-1207	-36	2738	3.29	-11.21	1.04
210	SLU 84	-1177	-35	2666	3.13	-11.04	0.98
210	SLE RA 1	-745	-23	1690	2.07	-6.87	0.66
210	SLE RA 2	-711	-22	1610	1.89	-6.68	0.59
210	SLE RA 3	-759	-23	1723	2.12	-6.99	0.67
210	SLE RA 4	-738	-23	1675	2.01	-6.87	0.63
210	SLE RA 5	-719	-22	1629	1.92	-6.74	0.6
210	SLE RA 6	-767	-24	1742	2.15	-7.04	0.68
210	SLE RA 7	-747	-23	1694	2.04	-6.92	0.64
210	SLE RA 8	-761	-23	1728	2.13	-6.98	0.67
210	SLE RA 9	-740	-23	1680	2.03	-6.87	0.64
210	SLE RA 10	-801	-24	1813	2.1	-7.55	0.66
210	SLE RA 11	-849	-26	1926	2.34	-7.86	0.74
210	SLE RA 12	-829	-25	1878	2.23	-7.74	0.7

Nodo	Cont.	Reazione a traslazione			Reazione a rotazione		
Ind.	N.br.	x	y	z	x	y	z
210	SLE RA 13	-809	-25	1832	2.14	-7.61	0.67
210	SLE RA 14	-857	-26	1944	2.37	-7.91	0.75
210	SLE RA 15	-837	-25	1896	2.26	-7.8	0.71
210	SLE RA 16	-851	-26	1931	2.35	-7.85	0.74
210	SLE RA 17	-831	-25	1883	2.24	-7.74	0.7
210	SLE RA 18	-873	-26	1980	2.38	-8.12	0.75
210	SLE RA 19	-853	-25	1932	2.27	-8.01	0.71
210	SLE RA 20	-881	-26	1999	2.41	-8.17	0.76
210	SLE RA 21	-861	-26	1951	2.3	-8.06	0.72
210	SLE FR 1	-745	-23	1690	2.07	-6.87	0.66
210	SLE FR 2	-738	-22	1674	2.03	-6.84	0.64
210	SLE FR 3	-748	-23	1698	2.08	-6.9	0.66
210	SLE FR 4	-776	-23	1761	2.13	-7.21	0.67
210	SLE FR 5	-786	-24	1785	2.18	-7.27	0.69
210	SLE FR 6	-809	-24	1835	2.22	-7.5	0.7
210	SLE QP 1	-745	-23	1690	2.07	-6.87	0.66
210	SLE QP 2	-783	-24	1777	2.16	-7.25	0.68
210	SLD 1	-446	-24	1053	1.73	-2.66	0.52
210	SLD 2	-446	-24	1053	1.73	-2.66	0.52
210	SLD 3	-526	-31	1238	2.08	-3.31	0.65
210	SLD 4	-526	-31	1238	2.08	-3.31	0.65
210	SLD 5	-561	-13	1280	1.49	-4.89	0.43
210	SLD 6	-561	-13	1280	1.49	-4.89	0.43
210	SLD 7	-827	-37	1896	2.68	-7.04	0.88
210	SLD 8	-827	-37	1896	2.68	-7.04	0.88
210	SLD 9	-739	-11	1659	1.64	-7.45	0.49
210	SLD 10	-739	-11	1659	1.64	-7.45	0.49
210	SLD 11	-1005	-34	2275	2.84	-9.6	0.93
210	SLD 12	-1005	-34	2275	2.84	-9.6	0.93
210	SLD 13	-1041	-16	2317	2.24	-11.19	0.71
210	SLD 14	-1041	-16	2317	2.24	-11.19	0.71
210	SLD 15	-1121	-23	2502	2.6	-11.83	0.85
210	SLD 16	-1121	-23	2502	2.6	-11.83	0.85
210	SLV 1	10	-26	73	1.1	3.5	0.29
210	SLV 2	10	-26	73	1.1	3.5	0.29
210	SLV 3	-184	-42	523	1.97	1.96	0.61
210	SLV 4	-184	-42	523	1.97	1.96	0.61
210	SLV 5	-251	1	584	0.52	-1.68	0.08
210	SLV 6	-251	1	584	0.52	-1.68	0.08
210	SLV 7	-897	-54	2084	3.43	-6.83	1.15
210	SLV 8	-897	-54	2084	3.43	-6.83	1.15
210	SLV 9	-669	7	1471	0.9	-7.66	0.22
210	SLV 10	-669	7	1471	0.9	-7.66	0.22
210	SLV 11	-1315	-48	2971	3.8	-12.82	1.29
210	SLV 12	-1315	-48	2971	3.8	-12.82	1.29
210	SLV 13	-1382	-5	3032	2.35	-16.45	0.76
210	SLV 14	-1382	-5	3032	2.35	-16.45	0.76
210	SLV 15	-1576	-22	3482	3.23	-18	1.08
210	SLV 16	-1576	-22	3482	3.23	-18	1.08
211	SLU 1	7	13	849	-16.33	-5.19	2.33
211	SLU 2	13	14	843	-16.25	-4.88	2.33
211	SLU 3	-3	14	847	-17.03	-5.66	2.43
211	SLU 4	1	14	843	-16.98	-5.47	2.43
211	SLU 5	10	14	852	-16.73	-5.09	2.4
211	SLU 6	-6	14	856	-17.5	-5.88	2.5
211	SLU 7	-3	15	852	-17.46	-5.69	2.5
211	SLU 8	0	14	866	-17.28	-5.62	2.47
211	SLU 9	4	14	863	-17.23	-5.43	2.47
211	SLU 10	1	17	960	-19.34	-6.27	2.78
211	SLU 11	-15	17	964	-20.12	-7.05	2.88
211	SLU 12	-11	17	961	-20.08	-6.86	2.88
211	SLU 13	-2	17	969	-19.82	-6.48	2.84
211	SLU 14	-18	17	973	-20.59	-7.27	2.95
211	SLU 15	-15	18	970	-20.55	-7.08	2.95
211	SLU 16	-12	17	984	-20.37	-7.01	2.92
211	SLU 17	-8	18	980	-20.32	-6.82	2.91
211	SLU 18	-10	18	1016	-20.75	-7.18	2.97
211	SLU 19	-7	18	1013	-20.7	-6.99	2.97
211	SLU 20	-14	18	1025	-21.22	-7.39	3.04
211	SLU 21	-10	19	1022	-21.17	-7.2	3.04
211	SLU 22	-12	16	931	-19.29	-6.68	2.76
211	SLU 23	-6	17	925	-19.21	-6.37	2.76
211	SLU 24	-22	17	929	-19.99	-7.15	2.86
211	SLU 25	-18	17	926	-19.95	-6.96	2.86
211	SLU 26	-9	17	934	-19.69	-6.58	2.82
211	SLU 27	-25	17	938	-20.46	-7.37	2.93
211	SLU 28	-22	18	935	-20.42	-7.18	2.93
211	SLU 29	-19	17	949	-20.24	-7.11	2.9
211	SLU 30	-15	17	945	-20.19	-6.92	2.89
211	SLU 31	-18	20	1043	-22.31	-7.76	3.2
211	SLU 32	-34	20	1047	-23.08	-8.54	3.31
211	SLU 33	-30	20	1043	-23.04	-8.35	3.31
211	SLU 34	-21	21	1052	-22.78	-7.97	3.27
211	SLU 35	-38	20	1056	-23.55	-8.76	3.38
211	SLU 36	-34	21	1052	-23.51	-8.57	3.38
211	SLU 37	-31	20	1066	-23.33	-8.5	3.35
211	SLU 38	-27	21	1063	-23.28	-8.31	3.34
211	SLU 39	-29	21	1099	-23.71	-8.67	3.4
211	SLU 40	-26	21	1095	-23.66	-8.48	3.4
211	SLU 41	-33	21	1108	-24.18	-8.88	3.47

Nodo	Cont.	Reazione a traslazione			Reazione a rotazione		
Ind.	N.br.	x	y	z	x	y	z
211	SLU 42	-29	22	1104	-24.13	-8.69	3.47
211	SLU 43	16	16	1075	-20.21	-6.24	2.89
211	SLU 44	22	17	1069	-20.14	-5.92	2.88
211	SLU 45	6	17	1073	-20.91	-6.71	2.99
211	SLU 46	9	17	1070	-20.87	-6.52	2.98
211	SLU 47	19	17	1078	-20.61	-6.14	2.95
211	SLU 48	2	17	1082	-21.39	-6.92	3.06
211	SLU 49	6	17	1078	-21.34	-6.74	3.05
211	SLU 50	9	17	1092	-21.16	-6.67	3.02
211	SLU 51	13	17	1089	-21.11	-6.48	3.02
211	SLU 52	10	20	1187	-23.23	-7.31	3.33
211	SLU 53	-6	20	1191	-24.01	-8.1	3.44
211	SLU 54	-3	20	1187	-23.96	-7.91	3.43
211	SLU 55	6	20	1195	-23.7	-7.53	3.4
211	SLU 56	-10	20	1199	-24.48	-8.31	3.5
211	SLU 57	-6	21	1196	-24.43	-8.13	3.5
211	SLU 58	-3	20	1210	-24.25	-8.06	3.47
211	SLU 59	1	20	1206	-24.21	-7.87	3.47
211	SLU 60	-1	21	1243	-24.63	-8.22	3.53
211	SLU 61	2	21	1239	-24.58	-8.03	3.52
211	SLU 62	-5	21	1252	-25.1	-8.44	3.6
211	SLU 63	-1	21	1248	-25.06	-8.25	3.59
211	SLU 64	-3	19	1157	-23.17	-7.73	3.32
211	SLU 65	3	20	1152	-23.1	-7.41	3.31
211	SLU 66	-13	20	1156	-23.87	-8.2	3.42
211	SLU 67	-10	20	1152	-23.83	-8.01	3.41
211	SLU 68	-1	20	1160	-23.57	-7.63	3.38
211	SLU 69	-17	20	1164	-24.35	-8.41	3.48
211	SLU 70	-13	20	1161	-24.3	-8.23	3.48
211	SLU 71	-10	20	1175	-24.12	-8.16	3.45
211	SLU 72	-6	20	1172	-24.07	-7.97	3.45
211	SLU 73	-9	23	1269	-26.19	-8.8	3.76
211	SLU 74	-25	23	1273	-26.97	-9.59	3.86
211	SLU 75	-22	23	1270	-26.92	-9.4	3.86
211	SLU 76	-13	23	1278	-26.66	-9.02	3.83
211	SLU 77	-29	23	1282	-27.44	-9.8	3.93
211	SLU 78	-25	24	1278	-27.39	-9.62	3.93
211	SLU 79	-22	23	1293	-27.21	-9.55	3.9
211	SLU 80	-19	24	1289	-27.17	-9.36	3.9
211	SLU 81	-21	24	1325	-27.59	-9.71	3.96
211	SLU 82	-17	24	1322	-27.54	-9.52	3.95
211	SLU 83	-24	24	1334	-28.06	-9.93	4.02
211	SLU 84	-20	25	1331	-28.02	-9.74	4.02
211	SLE RA 1	2	14	872	-17.18	-5.62	2.46
211	SLE RA 2	6	14	868	-17.13	-5.41	2.45
211	SLE RA 3	-5	14	871	-17.64	-5.93	2.52
211	SLE RA 4	-3	15	869	-17.61	-5.8	2.52
211	SLE RA 5	3	15	874	-17.44	-5.55	2.5
211	SLE RA 6	-7	15	877	-17.96	-6.07	2.57
211	SLE RA 7	-5	15	874	-17.93	-5.95	2.57
211	SLE RA 8	-3	14	884	-17.81	-5.9	2.55
211	SLE RA 9	0	15	882	-17.78	-5.78	2.54
211	SLE RA 10	-2	17	947	-19.19	-6.33	2.75
211	SLE RA 11	-13	17	949	-19.7	-6.86	2.82
211	SLE RA 12	-11	17	947	-19.67	-6.73	2.82
211	SLE RA 13	-5	17	952	-19.5	-6.48	2.8
211	SLE RA 14	-15	17	955	-20.02	-7	2.87
211	SLE RA 15	-13	17	953	-19.99	-6.88	2.86
211	SLE RA 16	-11	17	962	-19.87	-6.83	2.85
211	SLE RA 17	-9	17	960	-19.84	-6.7	2.84
211	SLE RA 18	-10	17	984	-20.12	-6.94	2.88
211	SLE RA 19	-7	17	982	-20.09	-6.81	2.88
211	SLE RA 20	-12	17	990	-20.43	-7.08	2.93
211	SLE RA 21	-10	18	988	-20.4	-6.96	2.93
211	SLE FR 1	2	14	872	-17.18	-5.62	2.46
211	SLE FR 2	3	14	871	-17.17	-5.57	2.46
211	SLE FR 3	1	14	875	-17.3	-5.67	2.47
211	SLE FR 4	-1	15	905	-18.05	-5.97	2.58
211	SLE FR 5	-3	15	908	-18.18	-6.07	2.6
211	SLE FR 6	-4	16	928	-18.65	-6.28	2.67
211	SLE QP 1	2	14	872	-17.18	-5.62	2.46
211	SLE QP 2	-2	15	906	-18.06	-6.01	2.58
211	SLD 1	526	-9	2388	-17.51	10.8	2.58
211	SLD 2	526	-9	2388	-17.51	10.8	2.58
211	SLD 3	494	28	2273	-14.04	9.72	1.9
211	SLD 4	494	28	2273	-14.04	9.72	1.9
211	SLD 5	205	-48	1523	-23.16	0.67	3.62
211	SLD 6	205	-48	1523	-23.16	0.67	3.62
211	SLD 7	99	75	1143	-11.59	-2.93	1.35
211	SLD 8	99	75	1143	-11.59	-2.93	1.35
211	SLD 9	-102	-45	669	-24.53	-9.1	3.82
211	SLD 10	-102	-45	669	-24.53	-9.1	3.82
211	SLD 11	-208	78	288	-12.96	-12.69	1.55
211	SLD 12	-208	78	288	-12.96	-12.69	1.55
211	SLD 13	-498	2	-462	-22.08	-21.74	3.27
211	SLD 14	-498	2	-462	-22.08	-21.74	3.27
211	SLD 15	-529	39	-576	-18.61	-22.82	2.59
211	SLD 16	-529	39	-576	-18.61	-22.82	2.59
211	SLV 1	1233	-46	4380	-16.93	33.33	2.62
211	SLV 2	1233	-46	4380	-16.93	33.33	2.62

Nodo	Cont.	Reazione a traslazione			Reazione a rotazione		
Ind.	N.br.	x	y	z	x	y	z
211	SLV 3	1158	48	4097	-8.49	30.76	0.93
211	SLV 4	1158	48	4097	-8.49	30.76	0.93
211	SLV 5	484	-147	2378	-30.53	9.7	5.17
211	SLV 6	484	-147	2378	-30.53	9.7	5.17
211	SLV 7	231	168	1433	-2.38	1.11	-0.48
211	SLV 8	231	168	1433	-2.38	1.11	-0.48
211	SLV 9	-235	-138	379	-33.74	-13.14	5.65
211	SLV 10	-235	-138	379	-33.74	-13.14	5.65
211	SLV 11	-487	176	-567	-5.59	-21.72	0
211	SLV 12	-487	176	-567	-5.59	-21.72	0
211	SLV 13	-1161	-18	-2285	-27.63	-42.79	4.24
211	SLV 14	-1161	-18	-2285	-27.63	-42.79	4.24
211	SLV 15	-1237	76	-2569	-19.19	-45.36	2.54
211	SLV 16	-1237	76	-2569	-19.19	-45.36	2.54
212	SLU 1	-424	47	2433	-33.47	-19.14	-0.29
212	SLU 2	-403	47	2394	-33.1	-18.28	-0.29
212	SLU 3	-451	49	2472	-34.88	-20.33	-0.3
212	SLU 4	-439	49	2449	-34.66	-19.81	-0.3
212	SLU 5	-418	48	2432	-34.07	-18.89	-0.3
212	SLU 6	-465	51	2510	-35.85	-20.94	-0.31
212	SLU 7	-453	51	2487	-35.63	-20.42	-0.31
212	SLU 8	-453	50	2508	-35.4	-20.36	-0.31
212	SLU 9	-440	50	2485	-35.18	-19.85	-0.31
212	SLU 10	-500	56	2798	-39.19	-22.61	-0.34
212	SLU 11	-548	58	2877	-40.97	-24.66	-0.36
212	SLU 12	-536	58	2853	-40.75	-24.14	-0.36
212	SLU 13	-515	57	2836	-40.16	-23.23	-0.35
212	SLU 14	-562	60	2915	-41.93	-25.27	-0.37
212	SLU 15	-550	59	2891	-41.71	-24.75	-0.37
212	SLU 16	-550	59	2913	-41.49	-24.7	-0.36
212	SLU 17	-537	59	2890	-41.27	-24.18	-0.36
212	SLU 18	-562	60	3010	-42.16	-25.34	-0.37
212	SLU 19	-550	60	2987	-41.94	-24.82	-0.37
212	SLU 20	-577	61	3048	-43.13	-25.95	-0.38
212	SLU 21	-564	61	3025	-42.91	-25.43	-0.38
212	SLU 22	-522	56	2766	-39.33	-23.5	-0.34
212	SLU 23	-501	55	2727	-38.97	-22.63	-0.34
212	SLU 24	-549	58	2805	-40.74	-24.68	-0.36
212	SLU 25	-537	58	2782	-40.52	-24.16	-0.36
212	SLU 26	-516	57	2765	-39.93	-23.24	-0.35
212	SLU 27	-564	59	2843	-41.71	-25.29	-0.37
212	SLU 28	-551	59	2820	-41.49	-24.77	-0.36
212	SLU 29	-551	59	2841	-41.26	-24.72	-0.36
212	SLU 30	-538	58	2818	-41.04	-24.2	-0.36
212	SLU 31	-598	64	3131	-45.05	-26.97	-0.4
212	SLU 32	-646	67	3210	-46.83	-29.01	-0.41
212	SLU 33	-634	66	3186	-46.61	-28.5	-0.41
212	SLU 34	-613	66	3169	-46.02	-27.58	-0.4
212	SLU 35	-661	68	3248	-47.79	-29.63	-0.42
212	SLU 36	-648	68	3224	-47.58	-29.11	-0.42
212	SLU 37	-648	67	3246	-47.35	-29.05	-0.42
212	SLU 38	-635	67	3223	-47.13	-28.53	-0.41
212	SLU 39	-660	68	3343	-48.02	-29.69	-0.42
212	SLU 40	-648	68	3320	-47.8	-29.17	-0.42
212	SLU 41	-675	70	3381	-48.99	-30.3	-0.43
212	SLU 42	-663	69	3358	-48.77	-29.78	-0.43
212	SLU 43	-517	59	3048	-41.5	-23.39	-0.36
212	SLU 44	-497	58	3009	-41.14	-22.53	-0.36
212	SLU 45	-545	61	3088	-42.91	-24.58	-0.37
212	SLU 46	-532	61	3065	-42.69	-24.06	-0.37
212	SLU 47	-511	60	3047	-42.1	-23.14	-0.37
212	SLU 48	-559	62	3126	-43.88	-25.19	-0.38
212	SLU 49	-547	62	3103	-43.66	-24.67	-0.38
212	SLU 50	-546	61	3124	-43.43	-24.61	-0.38
212	SLU 51	-534	61	3101	-43.21	-24.1	-0.38
212	SLU 52	-594	67	3414	-47.22	-26.86	-0.41
212	SLU 53	-642	69	3492	-49	-28.91	-0.43
212	SLU 54	-629	69	3469	-48.78	-28.39	-0.43
212	SLU 55	-608	68	3452	-48.19	-27.48	-0.42
212	SLU 56	-656	71	3530	-49.96	-29.52	-0.44
212	SLU 57	-644	71	3507	-49.75	-29	-0.44
212	SLU 58	-643	70	3529	-49.52	-28.95	-0.43
212	SLU 59	-631	70	3505	-49.3	-28.43	-0.43
212	SLU 60	-656	71	3626	-50.19	-29.59	-0.44
212	SLU 61	-644	71	3603	-49.98	-29.07	-0.44
212	SLU 62	-670	73	3664	-51.16	-30.2	-0.45
212	SLU 63	-658	72	3641	-50.94	-29.68	-0.45
212	SLU 64	-615	67	3381	-47.36	-27.75	-0.41
212	SLU 65	-595	67	3342	-47	-26.88	-0.41
212	SLU 66	-643	69	3421	-48.77	-28.93	-0.43
212	SLU 67	-630	69	3398	-48.56	-28.41	-0.43
212	SLU 68	-609	68	3380	-47.96	-27.49	-0.42
212	SLU 69	-657	71	3459	-49.74	-29.54	-0.44
212	SLU 70	-645	70	3436	-49.52	-29.02	-0.43
212	SLU 71	-644	70	3457	-49.29	-28.97	-0.43
212	SLU 72	-632	70	3434	-49.07	-28.45	-0.43
212	SLU 73	-692	76	3747	-53.08	-31.22	-0.47
212	SLU 74	-740	78	3825	-54.86	-33.27	-0.48
212	SLU 75	-727	78	3802	-54.64	-32.75	-0.48
212	SLU 76	-706	77	3785	-54.05	-31.83	-0.47

Nodo	Cont.	Reazione a traslazione			Reazione a rotazione		
Ind.	N.br.	x	y	z	x	y	z
212	SLU 77	-754	79	3863	-55.83	-33.88	-0.49
212	SLU 78	-742	79	3840	-55.61	-33.36	-0.49
212	SLU 79	-741	79	3862	-55.38	-33.3	-0.49
212	SLU 80	-729	78	3838	-55.16	-32.78	-0.48
212	SLU 81	-754	80	3959	-56.06	-33.94	-0.49
212	SLU 82	-742	79	3936	-55.84	-33.42	-0.49
212	SLU 83	-768	81	3997	-57.02	-34.55	-0.5
212	SLU 84	-756	81	3974	-56.8	-34.03	-0.5
212	SLE RA 1	-452	50	2528	-35.14	-20.39	-0.31
212	SLE RA 2	-438	50	2502	-34.9	-19.81	-0.31
212	SLE RA 3	-470	51	2554	-36.09	-21.18	-0.32
212	SLE RA 4	-462	51	2539	-35.94	-20.83	-0.31
212	SLE RA 5	-448	50	2527	-35.54	-20.22	-0.31
212	SLE RA 6	-480	52	2580	-36.73	-21.58	-0.32
212	SLE RA 7	-471	52	2564	-36.58	-21.24	-0.32
212	SLE RA 8	-471	52	2578	-36.43	-21.2	-0.32
212	SLE RA 9	-463	51	2563	-36.29	-20.85	-0.32
212	SLE RA 10	-503	55	2771	-38.96	-22.7	-0.34
212	SLE RA 11	-535	57	2824	-40.14	-24.07	-0.35
212	SLE RA 12	-527	57	2808	-40	-23.72	-0.35
212	SLE RA 13	-512	56	2797	-39.6	-23.11	-0.35
212	SLE RA 14	-544	58	2849	-40.79	-24.47	-0.36
212	SLE RA 15	-536	58	2834	-40.64	-24.13	-0.36
212	SLE RA 16	-536	57	2848	-40.49	-24.09	-0.35
212	SLE RA 17	-527	57	2832	-40.34	-23.75	-0.35
212	SLE RA 18	-544	58	2913	-40.94	-24.52	-0.36
212	SLE RA 19	-536	58	2897	-40.79	-24.17	-0.36
212	SLE RA 20	-554	59	2938	-41.58	-24.92	-0.36
212	SLE RA 21	-546	59	2923	-41.44	-24.58	-0.36
212	SLE FR 1	-452	50	2528	-35.14	-20.39	-0.31
212	SLE FR 2	-449	50	2523	-35.1	-20.27	-0.31
212	SLE FR 3	-456	50	2538	-35.4	-20.55	-0.31
212	SLE FR 4	-477	52	2638	-36.83	-21.51	-0.32
212	SLE FR 5	-483	53	2653	-37.14	-21.79	-0.33
212	SLE FR 6	-498	54	2720	-38.04	-22.45	-0.33
212	SLE QP 1	-452	50	2528	-35.14	-20.39	-0.31
212	SLE QP 2	-480	52	2643	-36.88	-21.62	-0.32
212	SLD 1	234	51	4163	-36.72	10.56	-0.31
212	SLD 2	234	51	4163	-36.72	10.56	-0.31
212	SLD 3	175	42	4008	-28.57	8.14	-0.26
212	SLD 4	175	42	4008	-28.57	8.14	-0.26
212	SLD 5	-176	64	3334	-49.19	-8.3	-0.39
212	SLD 6	-176	64	3334	-49.19	-8.3	-0.39
212	SLD 7	-372	37	2818	-22.03	-16.37	-0.23
212	SLD 8	-372	37	2818	-22.03	-16.37	-0.23
212	SLD 9	-587	68	2469	-51.74	-26.88	-0.42
212	SLD 10	-587	68	2469	-51.74	-26.88	-0.42
212	SLD 11	-783	40	1953	-24.57	-34.95	-0.25
212	SLD 12	-783	40	1953	-24.57	-34.95	-0.25
212	SLD 13	-1135	62	1279	-45.2	-51.39	-0.39
212	SLD 14	-1135	62	1279	-45.2	-51.39	-0.39
212	SLD 15	-1193	54	1124	-37.05	-53.81	-0.34
212	SLD 16	-1193	54	1124	-37.05	-53.81	-0.34
212	SLV 1	1193	49	6210	-37	53.73	-0.29
212	SLV 2	1193	49	6210	-37	53.73	-0.29
212	SLV 3	1050	29	5821	-16.88	47.92	-0.18
212	SLV 4	1050	29	5821	-16.88	47.92	-0.18
212	SLV 5	238	81	4303	-67.43	9.79	-0.49
212	SLV 6	238	81	4303	-67.43	9.79	-0.49
212	SLV 7	-236	15	3007	-0.37	-9.57	-0.1
212	SLV 8	-236	15	3007	-0.37	-9.57	-0.1
212	SLV 9	-723	89	2280	-73.4	-33.68	-0.54
212	SLV 10	-723	89	2280	-73.4	-33.68	-0.54
212	SLV 11	-1197	23	983	-6.34	-53.04	-0.15
212	SLV 12	-1197	23	983	-6.34	-53.04	-0.15
212	SLV 13	-2009	76	-535	-56.88	-91.17	-0.47
212	SLV 14	-2009	76	-535	-56.88	-91.17	-0.47
212	SLV 15	-2152	56	-924	-36.77	-96.98	-0.35
212	SLV 16	-2152	56	-924	-36.77	-96.98	-0.35
213	SLU 1	-814	35	2936	-31.35	-30.16	-0.25
213	SLU 2	-782	34	2887	-30.8	-29.02	-0.25
213	SLU 3	-856	36	2997	-32.65	-31.68	-0.26
213	SLU 4	-837	36	2968	-32.32	-30.99	-0.26
213	SLU 5	-805	35	2934	-31.7	-29.86	-0.25
213	SLU 6	-879	37	3045	-33.55	-32.51	-0.27
213	SLU 7	-860	37	3015	-33.22	-31.83	-0.27
213	SLU 8	-860	37	3030	-33.15	-31.83	-0.27
213	SLU 9	-841	36	3001	-32.82	-31.15	-0.26
213	SLU 10	-958	40	3402	-36.23	-35.55	-0.29
213	SLU 11	-1031	42	3513	-38.09	-38.2	-0.3
213	SLU 12	-1012	42	3483	-37.75	-37.52	-0.3
213	SLU 13	-981	41	3449	-37.13	-36.39	-0.3
213	SLU 14	-1054	43	3560	-38.99	-39.04	-0.31
213	SLU 15	-1035	43	3530	-38.65	-38.36	-0.31
213	SLU 16	-1036	43	3546	-38.58	-38.36	-0.31
213	SLU 17	-1017	42	3516	-38.25	-37.68	-0.31
213	SLU 18	-1065	43	3672	-39.12	-39.48	-0.31
213	SLU 19	-1045	43	3642	-38.79	-38.8	-0.31
213	SLU 20	-1088	44	3719	-40.02	-40.32	-0.32
213	SLU 21	-1069	44	3690	-39.68	-39.64	-0.32

Nodo	Cont.	Reazione a traslazione			Reazione a rotazione		
Ind.	N.br.	x	y	z	x	y	z
213	SLU 22	-983	41	3372	-36.62	-36.44	-0.29
213	SLU 23	-952	40	3323	-36.07	-35.3	-0.29
213	SLU 24	-1025	42	3434	-37.92	-37.96	-0.3
213	SLU 25	-1006	42	3404	-37.59	-37.28	-0.3
213	SLU 26	-975	41	3370	-36.97	-36.14	-0.3
213	SLU 27	-1048	43	3481	-38.82	-38.8	-0.31
213	SLU 28	-1029	43	3451	-38.49	-38.11	-0.31
213	SLU 29	-1030	43	3467	-38.42	-38.11	-0.31
213	SLU 30	-1011	42	3437	-38.09	-37.43	-0.3
213	SLU 31	-1127	46	3838	-41.51	-41.83	-0.33
213	SLU 32	-1200	48	3949	-43.36	-44.49	-0.35
213	SLU 33	-1181	48	3919	-43.03	-43.8	-0.34
213	SLU 34	-1150	47	3885	-42.4	-42.67	-0.34
213	SLU 35	-1224	49	3996	-44.26	-45.32	-0.35
213	SLU 36	-1204	49	3967	-43.92	-44.64	-0.35
213	SLU 37	-1205	49	3982	-43.86	-44.64	-0.35
213	SLU 38	-1186	48	3952	-43.52	-43.96	-0.35
213	SLU 39	-1234	49	4108	-44.39	-45.76	-0.35
213	SLU 40	-1215	49	4079	-44.06	-45.08	-0.35
213	SLU 41	-1257	50	4156	-45.29	-46.6	-0.36
213	SLU 42	-1238	50	4126	-44.96	-45.92	-0.36
213	SLU 43	-1000	43	3667	-38.95	-37.05	-0.31
213	SLU 44	-968	43	3618	-38.4	-35.91	-0.31
213	SLU 45	-1042	45	3728	-40.25	-38.57	-0.32
213	SLU 46	-1023	44	3699	-39.92	-37.89	-0.32
213	SLU 47	-992	44	3665	-39.29	-36.75	-0.31
213	SLU 48	-1065	46	3776	-41.15	-39.41	-0.33
213	SLU 49	-1046	45	3746	-40.81	-38.73	-0.33
213	SLU 50	-1047	45	3762	-40.75	-38.73	-0.33
213	SLU 51	-1028	45	3732	-40.41	-38.04	-0.32
213	SLU 52	-1144	49	4133	-43.83	-42.44	-0.35
213	SLU 53	-1217	51	4244	-45.69	-45.1	-0.37
213	SLU 54	-1198	50	4214	-45.35	-44.42	-0.36
213	SLU 55	-1167	50	4180	-44.73	-43.28	-0.36
213	SLU 56	-1240	52	4291	-46.58	-45.94	-0.37
213	SLU 57	-1221	51	4261	-46.25	-45.25	-0.37
213	SLU 58	-1222	51	4277	-46.18	-45.25	-0.37
213	SLU 59	-1203	51	4247	-45.85	-44.57	-0.37
213	SLU 60	-1251	52	4403	-46.72	-46.38	-0.37
213	SLU 61	-1232	51	4374	-46.38	-45.69	-0.37
213	SLU 62	-1274	53	4450	-47.61	-47.21	-0.38
213	SLU 63	-1255	52	4421	-47.28	-46.53	-0.38
213	SLU 64	-1170	49	4103	-44.22	-43.33	-0.35
213	SLU 65	-1138	48	4054	-43.67	-42.2	-0.35
213	SLU 66	-1211	50	4165	-45.52	-44.85	-0.36
213	SLU 67	-1192	50	4135	-45.19	-44.17	-0.36
213	SLU 68	-1161	49	4101	-44.57	-43.03	-0.36
213	SLU 69	-1234	51	4212	-46.42	-45.69	-0.37
213	SLU 70	-1215	51	4182	-46.09	-45.01	-0.37
213	SLU 71	-1216	51	4198	-46.02	-45.01	-0.37
213	SLU 72	-1197	51	4168	-45.69	-44.33	-0.37
213	SLU 73	-1313	54	4569	-49.1	-48.72	-0.39
213	SLU 74	-1387	56	4680	-50.96	-51.38	-0.41
213	SLU 75	-1367	56	4650	-50.62	-50.7	-0.4
213	SLU 76	-1336	55	4617	-50	-49.56	-0.4
213	SLU 77	-1410	57	4727	-51.86	-52.22	-0.41
213	SLU 78	-1391	57	4698	-51.52	-51.54	-0.41
213	SLU 79	-1391	57	4713	-51.45	-51.54	-0.41
213	SLU 80	-1372	57	4684	-51.12	-50.85	-0.41
213	SLU 81	-1420	58	4839	-51.99	-52.66	-0.42
213	SLU 82	-1401	57	4810	-51.66	-51.98	-0.41
213	SLU 83	-1443	59	4887	-52.89	-53.5	-0.42
213	SLU 84	-1424	58	4857	-52.55	-52.81	-0.42
213	SLE RA 1	-863	36	3061	-32.86	-31.95	-0.26
213	SLE RA 2	-841	36	3028	-32.49	-31.19	-0.26
213	SLE RA 3	-890	37	3101	-33.72	-32.97	-0.27
213	SLE RA 4	-877	37	3082	-33.5	-32.51	-0.27
213	SLE RA 5	-857	37	3059	-33.09	-31.75	-0.26
213	SLE RA 6	-906	38	3133	-34.32	-33.52	-0.27
213	SLE RA 7	-893	38	3113	-34.1	-33.07	-0.27
213	SLE RA 8	-893	38	3124	-34.06	-33.07	-0.27
213	SLE RA 9	-881	38	3104	-33.83	-32.61	-0.27
213	SLE RA 10	-958	40	3371	-36.11	-35.55	-0.29
213	SLE RA 11	-1007	41	3445	-37.35	-37.32	-0.3
213	SLE RA 12	-994	41	3425	-37.13	-36.86	-0.3
213	SLE RA 13	-974	41	3403	-36.71	-36.1	-0.29
213	SLE RA 14	-1023	42	3477	-37.95	-37.88	-0.3
213	SLE RA 15	-1010	42	3457	-37.73	-37.42	-0.3
213	SLE RA 16	-1010	42	3467	-37.68	-37.42	-0.3
213	SLE RA 17	-998	42	3447	-37.46	-36.97	-0.3
213	SLE RA 18	-1029	42	3551	-38.04	-38.17	-0.3
213	SLE RA 19	-1017	42	3532	-37.81	-37.71	-0.3
213	SLE RA 20	-1045	43	3583	-38.63	-38.73	-0.31
213	SLE RA 21	-1032	43	3563	-38.41	-38.27	-0.31
213	SLE FR 1	-863	36	3061	-32.86	-31.95	-0.26
213	SLE FR 2	-858	36	3054	-32.78	-31.8	-0.26
213	SLE FR 3	-869	37	3073	-33.1	-32.18	-0.26
213	SLE FR 4	-908	38	3201	-34.34	-33.67	-0.27
213	SLE FR 5	-919	38	3220	-34.65	-34.04	-0.28
213	SLE FR 6	-946	39	3306	-35.45	-35.06	-0.28

Nodo	Cont.	Reazione a traslazione			Reazione a rotazione		
Ind.	N.br.	x	y	z	x	y	z
213	SLE QP 1	-863	36	3061	-32.86	-31.95	-0.26
213	SLE QP 2	-913	38	3208	-34.41	-33.82	-0.28
213	SLD 1	-22	52	3929	-38.85	-0.09	-0.38
213	SLD 2	-22	52	3929	-38.85	-0.09	-0.38
213	SLD 3	-107	33	3816	-21.86	-3.1	-0.24
213	SLD 4	-107	33	3816	-21.86	-3.1	-0.24
213	SLD 5	-516	70	3595	-61.52	-19.15	-0.52
213	SLD 6	-516	70	3595	-61.52	-19.15	-0.52
213	SLD 7	-800	9	3220	-4.87	-29.16	-0.05
213	SLD 8	-800	9	3220	-4.87	-29.16	-0.05
213	SLD 9	-1025	68	3196	-63.95	-38.48	-0.5
213	SLD 10	-1025	68	3196	-63.95	-38.48	-0.5
213	SLD 11	-1309	6	2821	-7.31	-48.49	-0.03
213	SLD 12	-1309	6	2821	-7.31	-48.49	-0.03
213	SLD 13	-1718	43	2599	-46.96	-64.54	-0.32
213	SLD 14	-1718	43	2599	-46.96	-64.54	-0.32
213	SLD 15	-1803	25	2487	-29.97	-67.54	-0.17
213	SLD 16	-1803	25	2487	-29.97	-67.54	-0.17
213	SLV 1	1175	72	4901	-46.36	45.22	-0.53
213	SLV 2	1175	72	4901	-46.36	45.22	-0.53
213	SLV 3	967	25	4623	-3.18	37.91	-0.17
213	SLV 4	967	25	4623	-3.18	37.91	-0.17
213	SLV 5	29	120	4139	-103.49	0.98	-0.9
213	SLV 6	29	120	4139	-103.49	0.98	-0.9
213	SLV 7	-664	-37	3209	40.46	-23.39	0.31
213	SLV 8	-664	-37	3209	40.46	-23.39	0.31
213	SLV 9	-1161	113	3206	-109.28	-44.25	-0.86
213	SLV 10	-1161	113	3206	-109.28	-44.25	-0.86
213	SLV 11	-1854	-43	2277	34.67	-68.62	0.35
213	SLV 12	-1854	-43	2277	34.67	-68.62	0.35
213	SLV 13	-2792	52	1793	-65.65	-105.54	-0.38
213	SLV 14	-2792	52	1793	-65.65	-105.54	-0.38
213	SLV 15	-3000	5	1514	-22.46	-112.86	-0.02
213	SLV 16	-3000	5	1514	-22.46	-112.86	-0.02
214	SLU 1	-1016	33	3024	-29.38	-34.88	-0.27
214	SLU 2	-978	32	2980	-28.69	-33.62	-0.27
214	SLU 3	-1063	34	3087	-30.58	-36.52	-0.28
214	SLU 4	-1041	34	3060	-30.16	-35.77	-0.28
214	SLU 5	-1005	33	3026	-29.53	-34.54	-0.28
214	SLU 6	-1090	35	3133	-31.41	-37.43	-0.29
214	SLU 7	-1068	35	3106	-31	-36.68	-0.29
214	SLU 8	-1070	35	3116	-31.05	-36.71	-0.29
214	SLU 9	-1047	34	3089	-30.64	-35.95	-0.29
214	SLU 10	-1195	38	3519	-33.57	-41.07	-0.31
214	SLU 11	-1280	39	3626	-35.46	-43.96	-0.33
214	SLU 12	-1258	39	3599	-35.04	-43.21	-0.33
214	SLU 13	-1222	38	3564	-34.41	-41.98	-0.32
214	SLU 14	-1307	40	3672	-36.29	-44.88	-0.34
214	SLU 15	-1285	40	3645	-35.88	-44.13	-0.33
214	SLU 16	-1286	40	3655	-35.93	-44.15	-0.33
214	SLU 17	-1264	40	3628	-35.52	-43.4	-0.33
214	SLU 18	-1325	40	3794	-36.35	-45.51	-0.34
214	SLU 19	-1303	40	3767	-35.94	-44.76	-0.34
214	SLU 20	-1352	41	3840	-37.19	-46.43	-0.35
214	SLU 21	-1330	41	3813	-36.77	-45.67	-0.34
214	SLU 22	-1222	38	3480	-34.14	-41.95	-0.32
214	SLU 23	-1184	37	3435	-33.46	-40.7	-0.31
214	SLU 24	-1270	39	3543	-35.34	-43.59	-0.33
214	SLU 25	-1247	39	3516	-34.93	-42.84	-0.33
214	SLU 26	-1211	38	3481	-34.29	-41.61	-0.32
214	SLU 27	-1297	40	3589	-36.18	-44.51	-0.34
214	SLU 28	-1274	40	3562	-35.76	-43.76	-0.33
214	SLU 29	-1276	40	3572	-35.81	-43.78	-0.33
214	SLU 30	-1253	39	3545	-35.4	-43.03	-0.33
214	SLU 31	-1401	43	3974	-38.34	-48.14	-0.36
214	SLU 32	-1486	45	4082	-40.22	-51.04	-0.37
214	SLU 33	-1464	44	4055	-39.81	-50.28	-0.37
214	SLU 34	-1428	44	4020	-39.17	-49.06	-0.37
214	SLU 35	-1513	46	4128	-41.06	-51.95	-0.38
214	SLU 36	-1491	45	4101	-40.64	-51.2	-0.38
214	SLU 37	-1493	45	4110	-40.69	-51.23	-0.38
214	SLU 38	-1470	45	4084	-40.28	-50.47	-0.38
214	SLU 39	-1531	46	4250	-41.12	-52.59	-0.38
214	SLU 40	-1509	45	4223	-40.7	-51.83	-0.38
214	SLU 41	-1558	47	4296	-41.95	-53.5	-0.39
214	SLU 42	-1536	46	4269	-41.54	-52.75	-0.39
214	SLU 43	-1250	41	3775	-36.56	-42.92	-0.34
214	SLU 44	-1212	40	3731	-35.87	-41.66	-0.33
214	SLU 45	-1297	42	3838	-37.76	-44.56	-0.35
214	SLU 46	-1275	42	3812	-37.34	-43.8	-0.35
214	SLU 47	-1239	41	3777	-36.71	-42.57	-0.34
214	SLU 48	-1324	43	3884	-38.59	-45.47	-0.36
214	SLU 49	-1302	43	3857	-38.18	-44.72	-0.36
214	SLU 50	-1303	43	3867	-38.23	-44.75	-0.36
214	SLU 51	-1281	42	3840	-37.82	-43.99	-0.35
214	SLU 52	-1429	46	4270	-40.75	-49.1	-0.38
214	SLU 53	-1514	47	4377	-42.64	-52	-0.4
214	SLU 54	-1492	47	4350	-42.22	-51.25	-0.39
214	SLU 55	-1456	46	4315	-41.59	-50.02	-0.39
214	SLU 56	-1541	48	4423	-43.47	-52.92	-0.4

Nodo	Cont.	Reazione a traslazione			Reazione a rotazione		
Ind.	N.br.	x	y	z	x	y	z
214	SLU 57	-1519	48	4396	-43.06	-52.16	-0.4
214	SLU 58	-1520	48	4406	-43.11	-52.19	-0.4
214	SLU 59	-1498	48	4379	-42.7	-51.44	-0.4
214	SLU 60	-1559	48	4545	-43.53	-53.55	-0.41
214	SLU 61	-1537	48	4519	-43.12	-52.8	-0.4
214	SLU 62	-1586	49	4591	-44.37	-54.47	-0.41
214	SLU 63	-1564	49	4564	-43.95	-53.71	-0.41
214	SLU 64	-1456	46	4231	-41.32	-49.99	-0.38
214	SLU 65	-1418	45	4187	-40.64	-48.73	-0.38
214	SLU 66	-1504	47	4294	-42.52	-51.63	-0.4
214	SLU 67	-1481	47	4267	-42.11	-50.88	-0.39
214	SLU 68	-1445	46	4232	-41.47	-49.65	-0.39
214	SLU 69	-1531	48	4340	-43.36	-52.55	-0.4
214	SLU 70	-1508	48	4313	-42.94	-51.79	-0.4
214	SLU 71	-1510	48	4323	-42.99	-51.82	-0.4
214	SLU 72	-1487	47	4296	-42.58	-51.07	-0.4
214	SLU 73	-1635	51	4725	-45.52	-56.18	-0.42
214	SLU 74	-1720	53	4833	-47.4	-59.08	-0.44
214	SLU 75	-1698	52	4806	-46.99	-58.32	-0.44
214	SLU 76	-1662	52	4771	-46.35	-57.09	-0.43
214	SLU 77	-1747	54	4879	-48.24	-59.99	-0.45
214	SLU 78	-1725	53	4852	-47.82	-59.24	-0.45
214	SLU 79	-1727	53	4862	-47.87	-59.26	-0.45
214	SLU 80	-1704	53	4835	-47.46	-58.51	-0.44
214	SLU 81	-1765	54	5001	-48.3	-60.62	-0.45
214	SLU 82	-1743	53	4974	-47.88	-59.87	-0.45
214	SLU 83	-1792	55	5047	-49.13	-61.54	-0.46
214	SLU 84	-1770	54	5020	-48.72	-60.79	-0.45
214	SLE RA 1	-1074	34	3155	-30.74	-36.9	-0.29
214	SLE RA 2	-1050	34	3125	-30.28	-36.06	-0.28
214	SLE RA 3	-1106	35	3196	-31.54	-37.99	-0.29
214	SLE RA 4	-1091	35	3179	-31.26	-37.49	-0.29
214	SLE RA 5	-1068	34	3155	-30.84	-36.67	-0.29
214	SLE RA 6	-1124	36	3227	-32.09	-38.6	-0.3
214	SLE RA 7	-1109	35	3209	-31.82	-38.1	-0.3
214	SLE RA 8	-1110	35	3216	-31.85	-38.12	-0.3
214	SLE RA 9	-1096	35	3198	-31.58	-37.62	-0.29
214	SLE RA 10	-1194	37	3484	-33.54	-41.02	-0.31
214	SLE RA 11	-1251	39	3556	-34.79	-42.96	-0.32
214	SLE RA 12	-1236	38	3538	-34.52	-42.45	-0.32
214	SLE RA 13	-1212	38	3515	-34.09	-41.63	-0.32
214	SLE RA 14	-1269	39	3586	-35.35	-43.57	-0.33
214	SLE RA 15	-1254	39	3568	-35.07	-43.06	-0.33
214	SLE RA 16	-1255	39	3575	-35.11	-43.08	-0.33
214	SLE RA 17	-1240	39	3557	-34.83	-42.58	-0.32
214	SLE RA 18	-1281	39	3668	-35.39	-43.99	-0.33
214	SLE RA 19	-1266	39	3650	-35.11	-43.49	-0.33
214	SLE RA 20	-1299	40	3698	-35.94	-44.6	-0.33
214	SLE RA 21	-1284	40	3680	-35.67	-44.1	-0.33
214	SLE FR 1	-1074	34	3155	-30.74	-36.9	-0.29
214	SLE FR 2	-1069	34	3149	-30.65	-36.73	-0.29
214	SLE FR 3	-1082	34	3167	-30.96	-37.14	-0.29
214	SLE FR 4	-1131	36	3303	-32.04	-38.86	-0.3
214	SLE FR 5	-1144	36	3321	-32.36	-39.27	-0.3
214	SLE FR 6	-1178	37	3411	-33.06	-40.44	-0.31
214	SLE QP 1	-1074	34	3155	-30.74	-36.9	-0.29
214	SLE QP 2	-1136	36	3309	-32.13	-39.03	-0.3
214	SLD 1	-150	53	3714	-48.25	-4.19	-0.43
214	SLD 2	-150	53	3714	-48.25	-4.19	-0.43
214	SLD 3	-249	28	3603	-24.59	-7.45	-0.24
214	SLD 4	-249	28	3603	-24.59	-7.45	-0.24
214	SLD 5	-692	79	3598	-72.86	-23.62	-0.64
214	SLD 6	-692	79	3598	-72.86	-23.62	-0.64
214	SLD 7	-1019	-4	3229	6.02	-34.5	0.01
214	SLD 8	-1019	-4	3229	6.02	-34.5	0.01
214	SLD 9	-1254	76	3388	-70.29	-43.55	-0.61
214	SLD 10	-1254	76	3388	-70.29	-43.55	-0.61
214	SLD 11	-1581	-7	3019	8.59	-54.43	0.04
214	SLD 12	-1581	-7	3019	8.59	-54.43	0.04
214	SLD 13	-2024	44	3014	-39.68	-70.6	-0.36
214	SLD 14	-2024	44	3014	-39.68	-70.6	-0.36
214	SLD 15	-2122	19	2903	-16.01	-73.86	-0.16
214	SLD 16	-2122	19	2903	-16.01	-73.86	-0.16
214	SLV 1	1175	79	4263	-72.66	42.63	-0.64
214	SLV 2	1175	79	4263	-72.66	42.63	-0.64
214	SLV 3	935	15	3990	-12.29	34.68	-0.14
214	SLV 4	935	15	3990	-12.29	34.68	-0.14
214	SLV 5	-79	145	4009	-135.86	-2.47	-1.15
214	SLV 6	-79	145	4009	-135.86	-2.47	-1.15
214	SLV 7	-879	-67	3099	65.39	-28.97	0.5
214	SLV 8	-879	-67	3099	65.39	-28.97	0.5
214	SLV 9	-1393	138	3518	-129.65	-49.08	-1.1
214	SLV 10	-1393	138	3518	-129.65	-49.08	-1.1
214	SLV 11	-2194	-73	2608	71.59	-75.58	0.56
214	SLV 12	-2194	-73	2608	71.59	-75.58	0.56
214	SLV 13	-3208	56	2627	-51.98	-112.73	-0.46
214	SLV 14	-3208	56	2627	-51.98	-112.73	-0.46
214	SLV 15	-3448	-7	2354	8.39	-120.69	0.04
214	SLV 16	-3448	-7	2354	8.39	-120.69	0.04
215	SLU 1	-1088	32	2972	-27.9	-36.91	-0.2

Nodo	Cont.	Reazione a traslazione			Reazione a rotazione		
Ind.	N.br.	x	y	z	x	y	z
215	SLU 2	-1050	31	2937	-27.1	-35.65	-0.19
215	SLU 3	-1138	33	3031	-29.02	-38.57	-0.2
215	SLU 4	-1115	33	3010	-28.54	-37.81	-0.2
215	SLU 5	-1077	32	2978	-27.88	-36.57	-0.2
215	SLU 6	-1165	34	3073	-29.8	-39.49	-0.21
215	SLU 7	-1142	34	3051	-29.33	-38.73	-0.21
215	SLU 8	-1143	34	3055	-29.47	-38.76	-0.21
215	SLU 9	-1120	33	3034	-28.99	-38	-0.21
215	SLU 10	-1286	36	3469	-31.56	-43.7	-0.22
215	SLU 11	-1374	38	3563	-33.47	-46.62	-0.24
215	SLU 12	-1351	38	3542	-33	-45.86	-0.23
215	SLU 13	-1314	37	3511	-32.34	-44.62	-0.23
215	SLU 14	-1402	39	3605	-34.26	-47.54	-0.24
215	SLU 15	-1379	39	3583	-33.78	-46.78	-0.24
215	SLU 16	-1380	39	3587	-33.93	-46.81	-0.24
215	SLU 17	-1357	38	3566	-33.45	-46.05	-0.24
215	SLU 18	-1426	39	3733	-34.26	-48.41	-0.24
215	SLU 19	-1403	39	3711	-33.79	-47.65	-0.24
215	SLU 20	-1454	40	3774	-35.05	-49.33	-0.25
215	SLU 21	-1431	40	3753	-34.57	-48.58	-0.25
215	SLU 22	-1310	37	3420	-32.28	-44.45	-0.23
215	SLU 23	-1272	36	3384	-31.48	-43.18	-0.22
215	SLU 24	-1359	38	3478	-33.4	-46.11	-0.24
215	SLU 25	-1336	38	3457	-32.92	-45.35	-0.23
215	SLU 26	-1299	37	3426	-32.27	-44.11	-0.23
215	SLU 27	-1387	39	3520	-34.19	-47.03	-0.24
215	SLU 28	-1364	39	3498	-33.71	-46.27	-0.24
215	SLU 29	-1365	39	3502	-33.85	-46.29	-0.24
215	SLU 30	-1342	38	3481	-33.37	-45.54	-0.24
215	SLU 31	-1508	41	3916	-35.94	-51.23	-0.26
215	SLU 32	-1596	43	4010	-37.86	-54.16	-0.27
215	SLU 33	-1573	43	3989	-37.38	-53.4	-0.26
215	SLU 34	-1536	42	3958	-36.72	-52.16	-0.26
215	SLU 35	-1623	44	4052	-38.64	-55.08	-0.27
215	SLU 36	-1600	44	4031	-38.17	-54.32	-0.27
215	SLU 37	-1602	44	4035	-38.31	-54.34	-0.27
215	SLU 38	-1579	43	4013	-37.83	-53.59	-0.27
215	SLU 39	-1648	44	4180	-38.65	-55.95	-0.27
215	SLU 40	-1625	44	4159	-38.17	-55.19	-0.27
215	SLU 41	-1676	45	4221	-39.43	-56.87	-0.28
215	SLU 42	-1653	45	4200	-38.95	-56.11	-0.28
215	SLU 43	-1339	40	3711	-34.76	-45.4	-0.25
215	SLU 44	-1300	39	3675	-33.96	-44.14	-0.24
215	SLU 45	-1388	41	3770	-35.88	-47.06	-0.25
215	SLU 46	-1365	41	3748	-35.41	-46.3	-0.25
215	SLU 47	-1328	40	3717	-34.75	-45.06	-0.25
215	SLU 48	-1416	42	3811	-36.67	-47.98	-0.26
215	SLU 49	-1393	42	3790	-36.19	-47.22	-0.26
215	SLU 50	-1394	42	3794	-36.34	-47.25	-0.26
215	SLU 51	-1371	41	3772	-35.86	-46.49	-0.25
215	SLU 52	-1537	44	4208	-38.42	-52.19	-0.27
215	SLU 53	-1624	46	4302	-40.34	-55.11	-0.29
215	SLU 54	-1601	46	4280	-39.86	-54.35	-0.28
215	SLU 55	-1564	45	4249	-39.21	-53.11	-0.28
215	SLU 56	-1652	47	4343	-41.13	-56.03	-0.29
215	SLU 57	-1629	47	4322	-40.65	-55.27	-0.29
215	SLU 58	-1630	47	4326	-40.79	-55.3	-0.29
215	SLU 59	-1607	46	4305	-40.31	-54.54	-0.29
215	SLU 60	-1677	47	4471	-41.13	-56.9	-0.29
215	SLU 61	-1653	47	4450	-40.65	-56.14	-0.29
215	SLU 62	-1704	48	4512	-41.92	-57.82	-0.3
215	SLU 63	-1681	48	4491	-41.44	-57.07	-0.29
215	SLU 64	-1561	45	4158	-39.15	-52.94	-0.28
215	SLU 65	-1522	44	4123	-38.35	-51.67	-0.27
215	SLU 66	-1610	46	4217	-40.27	-54.6	-0.28
215	SLU 67	-1587	46	4195	-39.79	-53.84	-0.28
215	SLU 68	-1550	45	4164	-39.13	-52.6	-0.28
215	SLU 69	-1637	47	4258	-41.05	-55.52	-0.29
215	SLU 70	-1614	47	4237	-40.57	-54.76	-0.29
215	SLU 71	-1616	47	4241	-40.72	-54.78	-0.29
215	SLU 72	-1593	46	4220	-40.24	-54.03	-0.28
215	SLU 73	-1759	49	4655	-42.8	-59.72	-0.3
215	SLU 74	-1846	51	4749	-44.72	-62.65	-0.32
215	SLU 75	-1823	51	4728	-44.25	-61.89	-0.31
215	SLU 76	-1786	50	4696	-43.59	-60.65	-0.31
215	SLU 77	-1874	52	4790	-45.51	-63.57	-0.32
215	SLU 78	-1851	52	4769	-45.03	-62.81	-0.32
215	SLU 79	-1852	52	4773	-45.17	-62.83	-0.32
215	SLU 80	-1829	51	4752	-44.7	-62.07	-0.32
215	SLU 81	-1898	52	4918	-45.51	-64.44	-0.32
215	SLU 82	-1875	52	4897	-45.03	-63.68	-0.32
215	SLU 83	-1926	53	4960	-46.3	-65.36	-0.33
215	SLU 84	-1903	53	4938	-45.82	-64.6	-0.32
215	SLE RA 1	-1152	33	3100	-29.15	-39.06	-0.21
215	SLE RA 2	-1126	33	3077	-28.62	-38.22	-0.2
215	SLE RA 3	-1185	34	3139	-29.9	-40.17	-0.21
215	SLE RA 4	-1169	34	3125	-29.58	-39.66	-0.21
215	SLE RA 5	-1144	33	3104	-29.14	-38.84	-0.21
215	SLE RA 6	-1203	35	3167	-30.42	-40.79	-0.21
215	SLE RA 7	-1188	35	3153	-30.1	-40.28	-0.21

Nodo	Cont.	Reazione a traslazione			Reazione a rotazione		
Ind.	N.br.	x	y	z	x	y	z
215	SLE RA 8	-1188	35	3155	-30.2	-40.3	-0.21
215	SLE RA 9	-1173	34	3141	-29.88	-39.79	-0.21
215	SLE RA 10	-1284	36	3431	-31.59	-43.59	-0.22
215	SLE RA 11	-1342	38	3494	-32.87	-45.54	-0.23
215	SLE RA 12	-1327	37	3480	-32.55	-45.03	-0.23
215	SLE RA 13	-1302	37	3459	-32.11	-44.2	-0.23
215	SLE RA 14	-1361	38	3522	-33.39	-46.15	-0.24
215	SLE RA 15	-1345	38	3507	-33.07	-45.65	-0.23
215	SLE RA 16	-1346	38	3510	-33.17	-45.66	-0.23
215	SLE RA 17	-1331	38	3496	-32.85	-45.16	-0.23
215	SLE RA 18	-1377	38	3607	-33.39	-46.73	-0.24
215	SLE RA 19	-1362	38	3593	-33.07	-46.23	-0.23
215	SLE RA 20	-1395	39	3635	-33.92	-47.35	-0.24
215	SLE RA 21	-1380	39	3620	-33.6	-46.84	-0.24
215	SLE FR 1	-1152	33	3100	-29.15	-39.06	-0.21
215	SLE FR 2	-1147	33	3096	-29.04	-38.9	-0.21
215	SLE FR 3	-1159	34	3111	-29.36	-39.31	-0.21
215	SLE FR 4	-1214	35	3248	-30.32	-41.2	-0.21
215	SLE FR 5	-1227	35	3263	-30.63	-41.61	-0.22
215	SLE FR 6	-1264	36	3354	-31.27	-42.9	-0.22
215	SLE QP 1	-1152	33	3100	-29.15	-39.06	-0.21
215	SLE QP 2	-1219	35	3252	-30.42	-41.36	-0.22
215	SLD 1	-185	55	3510	-49.31	-5.89	-0.34
215	SLD 2	-185	55	3510	-49.31	-5.89	-0.34
215	SLD 3	-289	25	3372	-20.86	-9.3	-0.16
215	SLD 4	-289	25	3372	-20.86	-9.3	-0.16
215	SLD 5	-750	86	3539	-79.24	-25.55	-0.52
215	SLD 6	-750	86	3539	-79.24	-25.55	-0.52
215	SLD 7	-1099	-13	3079	15.6	-36.92	0.07
215	SLD 8	-1099	-13	3079	15.6	-36.92	0.07
215	SLD 9	-1340	83	3425	-76.44	-45.81	-0.5
215	SLD 10	-1340	83	3425	-76.44	-45.81	-0.5
215	SLD 11	-1688	-16	2966	18.4	-57.18	0.09
215	SLD 12	-1688	-16	2966	18.4	-57.18	0.09
215	SLD 13	-2149	44	3132	-39.98	-73.43	-0.27
215	SLD 14	-2149	44	3132	-39.98	-73.43	-0.27
215	SLD 15	-2254	15	2994	-11.53	-76.84	-0.09
215	SLD 16	-2254	15	2994	-11.53	-76.84	-0.09
215	SLV 1	1207	85	3867	-78.1	41.82	-0.52
215	SLV 2	1207	85	3867	-78.1	41.82	-0.52
215	SLV 3	951	10	3522	-5.43	33.46	-0.06
215	SLV 4	951	10	3522	-5.43	33.46	-0.06
215	SLV 5	-102	164	3959	-154.95	-3.74	-1
215	SLV 6	-102	164	3959	-154.95	-3.74	-1
215	SLV 7	-958	-87	2811	87.3	-31.59	0.52
215	SLV 8	-958	-87	2811	87.3	-31.59	0.52
215	SLV 9	-1481	157	3694	-148.14	-51.14	-0.95
215	SLV 10	-1481	157	3694	-148.14	-51.14	-0.95
215	SLV 11	-2337	-95	2545	94.11	-78.99	0.57
215	SLV 12	-2337	-95	2545	94.11	-78.99	0.57
215	SLV 13	-3389	60	2982	-55.41	-116.19	-0.37
215	SLV 14	-3389	60	2982	-55.41	-116.19	-0.37
215	SLV 15	-3646	-15	2638	17.26	-124.54	0.09
215	SLV 16	-3646	-15	2638	17.26	-124.54	0.09
216	SLU 1	-1059	32	2919	-26.5	-34.22	-0.15
216	SLU 2	-1022	31	2892	-25.6	-33.05	-0.15
216	SLU 3	-1105	33	2973	-27.55	-35.72	-0.16
216	SLU 4	-1083	32	2958	-27.01	-35.02	-0.16
216	SLU 5	-1048	32	2930	-26.34	-33.87	-0.15
216	SLU 6	-1131	34	3011	-28.29	-36.55	-0.16
216	SLU 7	-1109	33	2995	-27.75	-35.84	-0.16
216	SLU 8	-1110	33	2994	-27.98	-35.86	-0.16
216	SLU 9	-1088	33	2978	-27.44	-35.16	-0.16
216	SLU 10	-1259	36	3414	-29.69	-40.67	-0.17
216	SLU 11	-1342	38	3495	-31.64	-43.35	-0.18
216	SLU 12	-1320	37	3479	-31.1	-42.65	-0.18
216	SLU 13	-1285	37	3452	-30.43	-41.5	-0.18
216	SLU 14	-1368	39	3533	-32.38	-44.17	-0.19
216	SLU 15	-1346	38	3517	-31.84	-43.47	-0.18
216	SLU 16	-1347	38	3516	-32.07	-43.49	-0.18
216	SLU 17	-1325	38	3500	-31.53	-42.79	-0.18
216	SLU 18	-1397	39	3664	-32.34	-45.11	-0.19
216	SLU 19	-1375	38	3648	-31.8	-44.41	-0.18
216	SLU 20	-1423	40	3702	-33.08	-45.93	-0.19
216	SLU 21	-1401	39	3686	-32.54	-45.23	-0.19
216	SLU 22	-1278	36	3355	-30.54	-41.3	-0.18
216	SLU 23	-1242	36	3329	-29.65	-40.13	-0.17
216	SLU 24	-1325	38	3410	-31.6	-42.8	-0.18
216	SLU 25	-1303	37	3394	-31.06	-42.1	-0.18
216	SLU 26	-1267	37	3366	-30.39	-40.95	-0.18
216	SLU 27	-1351	39	3447	-32.34	-43.63	-0.19
216	SLU 28	-1329	38	3431	-31.8	-42.92	-0.18
216	SLU 29	-1330	38	3430	-32.02	-42.94	-0.18
216	SLU 30	-1308	38	3414	-31.49	-42.24	-0.18
216	SLU 31	-1478	41	3850	-33.74	-47.75	-0.2
216	SLU 32	-1562	43	3931	-35.69	-50.43	-0.21
216	SLU 33	-1540	42	3915	-35.15	-49.73	-0.2
216	SLU 34	-1504	41	3888	-34.48	-48.58	-0.2
216	SLU 35	-1587	44	3969	-36.43	-51.25	-0.21
216	SLU 36	-1565	43	3953	-35.89	-50.55	-0.21

Nodo	Cont.	Reazione a traslazione			Reazione a rotazione		
Ind.	N.br.	x	y	z	x	y	z
216	SLU 37	-1566	43	3952	-36.11	-50.57	-0.21
216	SLU 38	-1544	43	3936	-35.58	-49.87	-0.21
216	SLU 39	-1617	44	4100	-36.39	-52.19	-0.21
216	SLU 40	-1595	43	4084	-35.85	-51.49	-0.21
216	SLU 41	-1642	44	4138	-37.13	-53.01	-0.21
216	SLU 42	-1620	44	4122	-36.59	-52.31	-0.21
216	SLU 43	-1301	39	3645	-33.06	-42.05	-0.19
216	SLU 44	-1264	39	3618	-32.16	-40.88	-0.19
216	SLU 45	-1348	41	3699	-34.11	-43.56	-0.2
216	SLU 46	-1326	40	3684	-33.57	-42.86	-0.19
216	SLU 47	-1290	39	3656	-32.9	-41.71	-0.19
216	SLU 48	-1373	42	3737	-34.85	-44.38	-0.2
216	SLU 49	-1351	41	3721	-34.32	-43.68	-0.2
216	SLU 50	-1352	41	3720	-34.54	-43.7	-0.2
216	SLU 51	-1330	41	3704	-34	-43	-0.2
216	SLU 52	-1501	44	4140	-36.25	-48.51	-0.21
216	SLU 53	-1584	46	4221	-38.2	-51.18	-0.22
216	SLU 54	-1562	45	4205	-37.66	-50.48	-0.22
216	SLU 55	-1527	44	4178	-36.99	-49.33	-0.21
216	SLU 56	-1610	46	4259	-38.94	-52.01	-0.22
216	SLU 57	-1588	46	4243	-38.4	-51.31	-0.22
216	SLU 58	-1589	46	4242	-38.63	-51.33	-0.22
216	SLU 59	-1567	46	4226	-38.09	-50.63	-0.22
216	SLU 60	-1639	46	4390	-38.9	-52.95	-0.22
216	SLU 61	-1617	46	4374	-38.36	-52.25	-0.22
216	SLU 62	-1665	47	4428	-39.64	-53.77	-0.23
216	SLU 63	-1643	47	4412	-39.1	-53.07	-0.23
216	SLU 64	-1521	44	4081	-37.1	-49.13	-0.21
216	SLU 65	-1484	43	4055	-36.21	-47.96	-0.21
216	SLU 66	-1567	46	4136	-38.16	-50.64	-0.22
216	SLU 67	-1545	45	4120	-37.62	-49.94	-0.22
216	SLU 68	-1510	44	4092	-36.95	-48.79	-0.21
216	SLU 69	-1593	46	4173	-38.9	-51.46	-0.22
216	SLU 70	-1571	46	4157	-38.36	-50.76	-0.22
216	SLU 71	-1572	46	4156	-38.59	-50.78	-0.22
216	SLU 72	-1550	46	4140	-38.05	-50.08	-0.22
216	SLU 73	-1721	48	4576	-40.3	-55.59	-0.23
216	SLU 74	-1804	50	4657	-42.25	-58.26	-0.24
216	SLU 75	-1782	50	4641	-41.71	-57.56	-0.24
216	SLU 76	-1746	49	4614	-41.04	-56.41	-0.24
216	SLU 77	-1830	51	4695	-42.99	-59.09	-0.25
216	SLU 78	-1808	51	4679	-42.45	-58.39	-0.25
216	SLU 79	-1809	51	4678	-42.67	-58.41	-0.25
216	SLU 80	-1787	50	4662	-42.14	-57.71	-0.24
216	SLU 81	-1859	51	4826	-42.95	-60.03	-0.25
216	SLU 82	-1837	51	4810	-42.41	-59.33	-0.25
216	SLU 83	-1885	52	4864	-43.69	-60.85	-0.25
216	SLU 84	-1863	52	4848	-43.15	-60.15	-0.25
216	SLE RA 1	-1122	33	3043	-27.65	-36.24	-0.16
216	SLE RA 2	-1097	32	3026	-27.06	-35.46	-0.16
216	SLE RA 3	-1153	34	3080	-28.36	-37.24	-0.16
216	SLE RA 4	-1138	34	3069	-28	-36.77	-0.16
216	SLE RA 5	-1114	33	3051	-27.55	-36.01	-0.16
216	SLE RA 6	-1170	34	3105	-28.85	-37.79	-0.17
216	SLE RA 7	-1155	34	3094	-28.49	-37.32	-0.16
216	SLE RA 8	-1156	34	3094	-28.64	-37.34	-0.16
216	SLE RA 9	-1141	34	3083	-28.28	-36.87	-0.16
216	SLE RA 10	-1255	36	3374	-29.78	-40.54	-0.17
216	SLE RA 11	-1310	37	3428	-31.08	-42.33	-0.18
216	SLE RA 12	-1296	37	3417	-30.72	-41.86	-0.18
216	SLE RA 13	-1272	36	3399	-30.28	-41.09	-0.18
216	SLE RA 14	-1328	38	3453	-31.57	-42.88	-0.18
216	SLE RA 15	-1313	37	3442	-31.22	-42.41	-0.18
216	SLE RA 16	-1314	37	3441	-31.37	-42.42	-0.18
216	SLE RA 17	-1299	37	3431	-31.01	-41.95	-0.18
216	SLE RA 18	-1347	38	3540	-31.55	-43.5	-0.18
216	SLE RA 19	-1332	37	3530	-31.19	-43.03	-0.18
216	SLE RA 20	-1364	38	3565	-32.04	-44.05	-0.18
216	SLE RA 21	-1349	38	3555	-31.68	-43.58	-0.18
216	SLE FR 1	-1122	33	3043	-27.65	-36.24	-0.16
216	SLE FR 2	-1117	33	3040	-27.53	-36.08	-0.16
216	SLE FR 3	-1128	33	3053	-27.85	-36.46	-0.16
216	SLE FR 4	-1184	34	3189	-28.7	-38.26	-0.17
216	SLE FR 5	-1196	35	3202	-29.02	-38.64	-0.17
216	SLE FR 6	-1234	35	3292	-29.6	-39.87	-0.17
216	SLE QP 1	-1122	33	3043	-27.65	-36.24	-0.16
216	SLE QP 2	-1189	34	3192	-28.82	-38.42	-0.17
216	SLD 1	-148	56	3169	-49.46	-4.11	-0.27
216	SLD 2	-148	56	3169	-49.46	-4.11	-0.27
216	SLD 3	-253	24	2997	-18.19	-7.45	-0.12
216	SLD 4	-253	24	2997	-18.19	-7.45	-0.12
216	SLD 5	-718	90	3445	-82.45	-23.07	-0.43
216	SLD 6	-718	90	3445	-82.45	-23.07	-0.43
216	SLD 7	-1067	-18	2874	21.8	-34.19	0.08
216	SLD 8	-1067	-18	2874	21.8	-34.19	0.08
216	SLD 9	-1311	87	3511	-79.44	-42.65	-0.41
216	SLD 10	-1311	87	3511	-79.44	-42.65	-0.41
216	SLD 11	-1661	-21	2939	24.81	-53.77	0.09
216	SLD 12	-1661	-21	2939	24.81	-53.77	0.09
216	SLD 13	-2125	45	3388	-39.45	-69.39	-0.22

Nodo	Cont.	Reazione a traslazione			Reazione a rotazione		
Ind.	N.br.	x	y	z	x	y	z
216	SLD 14	-2125	45	3388	-39.45	-69.39	-0.22
216	SLD 15	-2230	13	3216	-8.18	-72.72	-0.06
216	SLD 16	-2230	13	3216	-8.18	-72.72	-0.06
216	SLV 1	1253	89	3151	-80.99	42.02	-0.42
216	SLV 2	1253	89	3151	-80.99	42.02	-0.42
216	SLV 3	995	6	2718	-1.07	33.83	-0.04
216	SLV 4	995	6	2718	-1.07	33.83	-0.04
216	SLV 5	-65	177	3835	-165.69	-1.86	-0.83
216	SLV 6	-65	177	3835	-165.69	-1.86	-0.83
216	SLV 7	-925	-100	2395	100.72	-29.16	0.46
216	SLV 8	-925	-100	2395	100.72	-29.16	0.46
216	SLV 9	-1453	169	3990	-158.36	-47.67	-0.79
216	SLV 10	-1453	169	3990	-158.36	-47.67	-0.79
216	SLV 11	-2313	-108	2550	108.05	-74.97	0.5
216	SLV 12	-2313	-108	2550	108.05	-74.97	0.5
216	SLV 13	-3373	62	3666	-56.57	-110.67	-0.3
216	SLV 14	-3373	62	3666	-56.57	-110.67	-0.3
216	SLV 15	-3631	-21	3234	23.35	-118.86	0.09
216	SLV 16	-3631	-21	3234	23.35	-118.86	0.09
217	SLU 1	-1000	31	2920	-24.91	-32.7	-0.12
217	SLU 2	-967	30	2900	-23.94	-31.64	-0.12
217	SLU 3	-1043	32	2973	-25.9	-34.09	-0.13
217	SLU 4	-1023	31	2962	-25.32	-33.45	-0.13
217	SLU 5	-990	31	2936	-24.63	-32.38	-0.12
217	SLU 6	-1066	33	3009	-26.59	-34.84	-0.13
217	SLU 7	-1046	32	2998	-26.01	-34.2	-0.13
217	SLU 8	-1046	32	2992	-26.29	-34.2	-0.13
217	SLU 9	-1026	32	2980	-25.71	-33.56	-0.13
217	SLU 10	-1201	34	3418	-27.67	-39.27	-0.14
217	SLU 11	-1278	37	3490	-29.63	-41.73	-0.15
217	SLU 12	-1258	36	3479	-29.05	-41.09	-0.15
217	SLU 13	-1224	35	3454	-28.36	-40.02	-0.14
217	SLU 14	-1301	37	3526	-30.32	-42.48	-0.15
217	SLU 15	-1281	37	3515	-29.74	-41.84	-0.15
217	SLU 16	-1281	37	3509	-30.03	-41.84	-0.15
217	SLU 17	-1261	37	3497	-29.44	-41.2	-0.15
217	SLU 18	-1336	37	3658	-30.25	-43.61	-0.15
217	SLU 19	-1316	37	3647	-29.66	-42.97	-0.15
217	SLU 20	-1359	38	3695	-30.94	-44.36	-0.16
217	SLU 21	-1339	38	3683	-30.35	-43.72	-0.15
217	SLU 22	-1215	35	3352	-28.63	-39.68	-0.14
217	SLU 23	-1181	34	3333	-27.66	-38.61	-0.14
217	SLU 24	-1257	37	3405	-29.62	-41.07	-0.15
217	SLU 25	-1237	36	3394	-29.04	-40.43	-0.15
217	SLU 26	-1204	35	3369	-28.35	-39.36	-0.14
217	SLU 27	-1281	37	3441	-30.31	-41.82	-0.15
217	SLU 28	-1260	37	3430	-29.73	-41.18	-0.15
217	SLU 29	-1261	37	3424	-30.01	-41.18	-0.15
217	SLU 30	-1241	37	3412	-29.43	-40.54	-0.15
217	SLU 31	-1416	39	3850	-31.39	-46.25	-0.16
217	SLU 32	-1492	41	3922	-33.35	-48.71	-0.17
217	SLU 33	-1472	41	3911	-32.77	-48.07	-0.17
217	SLU 34	-1439	40	3886	-32.08	-47	-0.16
217	SLU 35	-1515	42	3958	-34.04	-49.45	-0.17
217	SLU 36	-1495	42	3947	-33.46	-48.81	-0.17
217	SLU 37	-1496	42	3941	-33.75	-48.82	-0.17
217	SLU 38	-1476	41	3930	-33.16	-48.18	-0.17
217	SLU 39	-1550	42	4091	-33.97	-50.59	-0.17
217	SLU 40	-1530	42	4079	-33.38	-49.95	-0.17
217	SLU 41	-1573	43	4127	-34.66	-51.34	-0.17
217	SLU 42	-1553	42	4115	-34.07	-50.7	-0.17
217	SLU 43	-1227	38	3647	-31.11	-40.12	-0.16
217	SLU 44	-1193	37	3628	-30.14	-39.05	-0.15
217	SLU 45	-1269	40	3701	-32.1	-41.51	-0.16
217	SLU 46	-1249	39	3689	-31.51	-40.87	-0.16
217	SLU 47	-1216	38	3664	-30.83	-39.8	-0.16
217	SLU 48	-1292	40	3737	-32.79	-42.26	-0.16
217	SLU 49	-1272	40	3725	-32.2	-41.62	-0.16
217	SLU 50	-1273	40	3719	-32.49	-41.62	-0.16
217	SLU 51	-1253	39	3708	-31.91	-40.98	-0.16
217	SLU 52	-1428	42	4145	-33.87	-46.69	-0.17
217	SLU 53	-1504	44	4218	-35.83	-49.15	-0.18
217	SLU 54	-1484	44	4207	-35.25	-48.51	-0.18
217	SLU 55	-1451	43	4181	-34.56	-47.44	-0.17
217	SLU 56	-1527	45	4254	-36.52	-49.9	-0.18
217	SLU 57	-1507	45	4243	-35.94	-49.26	-0.18
217	SLU 58	-1508	45	4237	-36.23	-49.26	-0.18
217	SLU 59	-1488	44	4225	-35.64	-48.62	-0.18
217	SLU 60	-1562	45	4386	-36.44	-51.03	-0.18
217	SLU 61	-1542	44	4375	-35.86	-50.39	-0.18
217	SLU 62	-1585	46	4422	-37.13	-51.78	-0.19
217	SLU 63	-1565	45	4411	-36.55	-51.14	-0.18
217	SLU 64	-1441	43	4080	-34.83	-47.1	-0.17
217	SLU 65	-1408	42	4060	-33.86	-46.03	-0.17
217	SLU 66	-1484	44	4133	-35.82	-48.48	-0.18
217	SLU 67	-1464	44	4121	-35.23	-47.85	-0.18
217	SLU 68	-1431	43	4096	-34.55	-46.78	-0.17
217	SLU 69	-1507	45	4169	-36.51	-49.23	-0.18
217	SLU 70	-1487	45	4158	-35.92	-48.59	-0.18
217	SLU 71	-1487	45	4152	-36.21	-48.6	-0.18

Nodo	Cont.	Reazione a traslazione			Reazione a rotazione		
Ind.	N.br.	x	y	z	x	y	z
217	SLU 72	-1467	44	4140	-35.63	-47.96	-0.18
217	SLU 73	-1643	47	4577	-37.59	-53.67	-0.19
217	SLU 74	-1719	49	4650	-39.55	-56.12	-0.2
217	SLU 75	-1699	48	4639	-38.97	-55.48	-0.2
217	SLU 76	-1666	48	4614	-38.28	-54.42	-0.19
217	SLU 77	-1742	50	4686	-40.24	-56.87	-0.2
217	SLU 78	-1722	49	4675	-39.66	-56.23	-0.2
217	SLU 79	-1722	49	4669	-39.95	-56.23	-0.2
217	SLU 80	-1702	49	4657	-39.36	-55.6	-0.2
217	SLU 81	-1777	50	4818	-40.16	-58.01	-0.2
217	SLU 82	-1757	49	4807	-39.58	-57.37	-0.2
217	SLU 83	-1800	51	4854	-40.85	-58.76	-0.21
217	SLU 84	-1780	50	4843	-40.27	-58.12	-0.2
217	SLE RA 1	-1062	32	3043	-25.98	-34.7	-0.13
217	SLE RA 2	-1039	31	3030	-25.33	-33.98	-0.13
217	SLE RA 3	-1090	33	3079	-26.63	-35.62	-0.13
217	SLE RA 4	-1077	33	3071	-26.24	-35.19	-0.13
217	SLE RA 5	-1054	32	3054	-25.79	-34.48	-0.13
217	SLE RA 6	-1105	33	3103	-27.09	-36.12	-0.14
217	SLE RA 7	-1092	33	3095	-26.7	-35.69	-0.13
217	SLE RA 8	-1092	33	3091	-26.9	-35.69	-0.13
217	SLE RA 9	-1079	33	3083	-26.51	-35.27	-0.13
217	SLE RA 10	-1196	35	3375	-27.82	-39.08	-0.14
217	SLE RA 11	-1247	36	3424	-29.12	-40.71	-0.15
217	SLE RA 12	-1233	36	3416	-28.73	-40.29	-0.14
217	SLE RA 13	-1211	35	3399	-28.28	-39.58	-0.14
217	SLE RA 14	-1262	37	3448	-29.58	-41.21	-0.15
217	SLE RA 15	-1248	36	3440	-29.19	-40.79	-0.15
217	SLE RA 16	-1249	36	3436	-29.39	-40.79	-0.15
217	SLE RA 17	-1235	36	3428	-29	-40.36	-0.15
217	SLE RA 18	-1285	37	3536	-29.53	-41.97	-0.15
217	SLE RA 19	-1272	36	3528	-29.14	-41.54	-0.15
217	SLE RA 20	-1301	37	3560	-29.99	-42.47	-0.15
217	SLE RA 21	-1287	37	3552	-29.6	-42.04	-0.15
217	SLE FR 1	-1062	32	3043	-25.98	-34.7	-0.13
217	SLE FR 2	-1057	32	3041	-25.85	-34.55	-0.13
217	SLE FR 3	-1068	32	3053	-26.16	-34.9	-0.13
217	SLE FR 4	-1124	33	3188	-26.91	-36.74	-0.14
217	SLE FR 5	-1135	34	3200	-27.23	-37.08	-0.14
217	SLE FR 6	-1173	34	3289	-27.75	-38.33	-0.14
217	SLE QP 1	-1062	32	3043	-25.98	-34.7	-0.13
217	SLE QP 2	-1129	33	3191	-27.04	-36.88	-0.14
217	SLD 1	-105	56	3181	-48.27	-3.77	-0.22
217	SLD 2	-105	56	3181	-48.27	-3.77	-0.22
217	SLD 3	-207	23	2985	-16.32	-6.97	-0.09
217	SLD 4	-207	23	2985	-16.32	-6.97	-0.09
217	SLD 5	-667	90	3485	-81.86	-22.08	-0.36
217	SLD 6	-667	90	3485	-81.86	-22.08	-0.36
217	SLD 7	-1007	-20	2832	24.62	-32.77	0.08
217	SLD 8	-1007	-20	2832	24.62	-32.77	0.08
217	SLD 9	-1251	86	3550	-78.71	-40.98	-0.35
217	SLD 10	-1251	86	3550	-78.71	-40.98	-0.35
217	SLD 11	-1590	-23	2897	27.77	-51.68	0.09
217	SLD 12	-1590	-23	2897	27.77	-51.68	0.09
217	SLD 13	-2050	44	3396	-37.76	-66.78	-0.18
217	SLD 14	-2050	44	3396	-37.76	-66.78	-0.18
217	SLD 15	-2152	11	3201	-5.82	-69.99	-0.05
217	SLD 16	-2152	11	3201	-5.82	-69.99	-0.05
217	SLV 1	1272	90	3184	-80.66	40.77	-0.36
217	SLV 2	1272	90	3184	-80.66	40.77	-0.36
217	SLV 3	1021	6	2689	0.98	32.86	-0.03
217	SLV 4	1021	6	2689	0.98	32.86	-0.03
217	SLV 5	-28	178	3940	-166.96	-1.59	-0.71
217	SLV 6	-28	178	3940	-166.96	-1.59	-0.71
217	SLV 7	-865	-102	2289	105.2	-27.95	0.4
217	SLV 8	-865	-102	2289	105.2	-27.95	0.4
217	SLV 9	-1393	169	4093	-159.28	-45.81	-0.68
217	SLV 10	-1393	169	4093	-159.28	-45.81	-0.68
217	SLV 11	-2230	-111	2442	112.87	-72.17	0.44
217	SLV 12	-2230	-111	2442	112.87	-72.17	0.44
217	SLV 13	-3278	61	3693	-55.07	-106.62	-0.25
217	SLV 14	-3278	61	3693	-55.07	-106.62	-0.25
217	SLV 15	-3529	-23	3198	26.58	-114.53	0.09
217	SLV 16	-3529	-23	3198	26.58	-114.53	0.09
218	SLU 1	-894	29	3017	-22.9	-27.79	-0.12
218	SLU 2	-864	28	3002	-21.87	-26.88	-0.11
218	SLU 3	-931	30	3074	-23.8	-28.94	-0.12
218	SLU 4	-913	30	3064	-23.18	-28.39	-0.12
218	SLU 5	-883	29	3039	-22.5	-27.48	-0.12
218	SLU 6	-950	31	3111	-24.43	-29.54	-0.13
218	SLU 7	-932	31	3102	-23.81	-28.99	-0.12
218	SLU 8	-932	31	3092	-24.15	-28.99	-0.12
218	SLU 9	-914	30	3082	-23.54	-28.44	-0.12
218	SLU 10	-1088	33	3526	-25.22	-33.79	-0.13
218	SLU 11	-1155	35	3598	-27.15	-35.86	-0.14
218	SLU 12	-1137	34	3589	-26.53	-35.31	-0.14
218	SLU 13	-1107	33	3564	-25.84	-34.39	-0.13
218	SLU 14	-1174	36	3636	-27.77	-36.46	-0.14
218	SLU 15	-1156	35	3627	-27.16	-35.91	-0.14
218	SLU 16	-1157	35	3616	-27.5	-35.9	-0.14

Nodo	Cont.	Reazione a traslazione			Reazione a rotazione		
Ind.	N.br.	x	y	z	x	y	z
218	SLU 17	-1139	35	3607	-26.88	-35.35	-0.14
218	SLU 18	-1214	35	3767	-27.68	-37.67	-0.14
218	SLU 19	-1196	35	3757	-27.06	-37.12	-0.14
218	SLU 20	-1233	36	3804	-28.31	-38.27	-0.15
218	SLU 21	-1216	36	3795	-27.69	-37.72	-0.14
218	SLU 22	-1095	34	3458	-26.25	-34.01	-0.14
218	SLU 23	-1065	33	3443	-25.22	-33.1	-0.13
218	SLU 24	-1132	35	3515	-27.15	-35.16	-0.14
218	SLU 25	-1114	34	3505	-26.54	-34.61	-0.14
218	SLU 26	-1084	33	3480	-25.85	-33.69	-0.13
218	SLU 27	-1151	36	3552	-27.78	-35.76	-0.14
218	SLU 28	-1133	35	3543	-27.17	-35.21	-0.14
218	SLU 29	-1134	35	3533	-27.51	-35.21	-0.14
218	SLU 30	-1116	35	3524	-26.89	-34.66	-0.14
218	SLU 31	-1290	37	3967	-28.57	-40.01	-0.15
218	SLU 32	-1356	39	4039	-30.5	-42.08	-0.16
218	SLU 33	-1338	39	4030	-29.88	-41.53	-0.16
218	SLU 34	-1309	38	4005	-29.2	-40.61	-0.15
218	SLU 35	-1376	40	4077	-31.13	-42.67	-0.16
218	SLU 36	-1358	39	4068	-30.51	-42.13	-0.16
218	SLU 37	-1358	40	4058	-30.86	-42.12	-0.16
218	SLU 38	-1340	39	4048	-30.24	-41.57	-0.16
218	SLU 39	-1415	40	4208	-31.03	-43.89	-0.16
218	SLU 40	-1398	39	4198	-30.42	-43.34	-0.16
218	SLU 41	-1435	41	4245	-31.66	-44.49	-0.16
218	SLU 42	-1417	40	4236	-31.04	-43.94	-0.16
218	SLU 43	-1093	37	3771	-28.62	-34	-0.15
218	SLU 44	-1063	36	3755	-27.59	-33.08	-0.14
218	SLU 45	-1130	38	3827	-29.52	-35.15	-0.15
218	SLU 46	-1112	37	3818	-28.9	-34.6	-0.15
218	SLU 47	-1082	36	3793	-28.22	-33.68	-0.15
218	SLU 48	-1149	38	3865	-30.15	-35.75	-0.15
218	SLU 49	-1131	38	3856	-29.53	-35.2	-0.15
218	SLU 50	-1131	38	3846	-29.87	-35.2	-0.15
218	SLU 51	-1113	38	3836	-29.26	-34.65	-0.15
218	SLU 52	-1287	40	4280	-30.94	-40	-0.16
218	SLU 53	-1354	42	4352	-32.86	-42.06	-0.17
218	SLU 54	-1336	41	4343	-32.25	-41.51	-0.17
218	SLU 55	-1306	41	4318	-31.56	-40.59	-0.16
218	SLU 56	-1373	43	4390	-33.49	-42.66	-0.17
218	SLU 57	-1355	42	4380	-32.88	-42.11	-0.17
218	SLU 58	-1356	42	4370	-33.22	-42.11	-0.17
218	SLU 59	-1338	42	4361	-32.6	-41.56	-0.17
218	SLU 60	-1413	43	4520	-33.4	-43.87	-0.17
218	SLU 61	-1395	42	4511	-32.78	-43.33	-0.17
218	SLU 62	-1432	44	4558	-34.03	-44.47	-0.18
218	SLU 63	-1415	43	4549	-33.41	-43.92	-0.17
218	SLU 64	-1294	41	4212	-31.97	-40.22	-0.16
218	SLU 65	-1264	40	4196	-30.94	-39.3	-0.16
218	SLU 66	-1331	42	4269	-32.87	-41.37	-0.17
218	SLU 67	-1313	41	4259	-32.26	-40.82	-0.17
218	SLU 68	-1284	41	4234	-31.57	-39.9	-0.16
218	SLU 69	-1350	43	4306	-33.5	-41.97	-0.17
218	SLU 70	-1332	42	4297	-32.88	-41.42	-0.17
218	SLU 71	-1333	42	4287	-33.23	-41.41	-0.17
218	SLU 72	-1315	42	4277	-32.61	-40.87	-0.17
218	SLU 73	-1489	44	4721	-34.29	-46.22	-0.18
218	SLU 74	-1555	46	4793	-36.22	-48.28	-0.19
218	SLU 75	-1537	46	4784	-35.6	-47.73	-0.18
218	SLU 76	-1508	45	4759	-34.92	-46.81	-0.18
218	SLU 77	-1575	47	4831	-36.85	-48.88	-0.19
218	SLU 78	-1557	47	4821	-36.23	-48.33	-0.19
218	SLU 79	-1557	47	4811	-36.57	-48.33	-0.19
218	SLU 80	-1539	46	4802	-35.96	-47.78	-0.19
218	SLU 81	-1615	47	4962	-36.75	-50.09	-0.19
218	SLU 82	-1597	47	4952	-36.14	-49.54	-0.19
218	SLU 83	-1634	48	4999	-37.38	-50.69	-0.19
218	SLU 84	-1616	47	4990	-36.76	-50.14	-0.19
218	SLE RA 1	-951	31	3143	-23.86	-29.57	-0.12
218	SLE RA 2	-931	30	3133	-23.17	-28.96	-0.12
218	SLE RA 3	-976	31	3181	-24.46	-30.34	-0.13
218	SLE RA 4	-964	31	3175	-24.05	-29.97	-0.12
218	SLE RA 5	-944	30	3158	-23.59	-29.36	-0.12
218	SLE RA 6	-989	32	3206	-24.88	-30.74	-0.13
218	SLE RA 7	-977	31	3199	-24.46	-30.37	-0.13
218	SLE RA 8	-977	32	3193	-24.69	-30.37	-0.13
218	SLE RA 9	-965	31	3187	-24.28	-30	-0.13
218	SLE RA 10	-1081	33	3483	-25.4	-33.57	-0.13
218	SLE RA 11	-1125	34	3531	-26.69	-34.95	-0.14
218	SLE RA 12	-1113	34	3524	-26.28	-34.58	-0.14
218	SLE RA 13	-1094	33	3507	-25.82	-33.97	-0.13
218	SLE RA 14	-1138	35	3555	-27.11	-35.34	-0.14
218	SLE RA 15	-1126	34	3549	-26.7	-34.98	-0.14
218	SLE RA 16	-1126	34	3543	-26.92	-34.98	-0.14
218	SLE RA 17	-1115	34	3537	-26.51	-34.61	-0.14
218	SLE RA 18	-1165	35	3643	-27.04	-36.15	-0.14
218	SLE RA 19	-1153	34	3637	-26.63	-35.79	-0.14
218	SLE RA 20	-1178	35	3668	-27.46	-36.55	-0.14
218	SLE RA 21	-1166	35	3662	-27.05	-36.19	-0.14
218	SLE FR 1	-951	31	3143	-23.86	-29.57	-0.12

Nodo	Cont.	Reazione a traslazione			Reazione a rotazione		
Ind.	N.br.	x	y	z	x	y	z
218	SLE FR 2	-947	30	3141	-23.72	-29.45	-0.12
218	SLE FR 3	-956	31	3153	-24.02	-29.73	-0.12
218	SLE FR 4	-1011	32	3291	-24.67	-31.42	-0.13
218	SLE FR 5	-1020	32	3303	-24.98	-31.7	-0.13
218	SLE FR 6	-1058	33	3393	-25.45	-32.86	-0.13
218	SLE QP 1	-951	31	3143	-23.86	-29.57	-0.12
218	SLE QP 2	-1015	32	3293	-24.81	-31.54	-0.13
218	SLD 1	-30	53	3209	-45.37	-0.54	-0.21
218	SLD 2	-30	53	3209	-45.37	-0.54	-0.21
218	SLD 3	-127	23	3006	-14.95	-3.54	-0.09
218	SLD 4	-127	23	3006	-14.95	-3.54	-0.09
218	SLD 5	-573	85	3575	-77.1	-17.69	-0.34
218	SLD 6	-573	85	3575	-77.1	-17.69	-0.34
218	SLD 7	-895	-18	2899	24.27	-27.7	0.07
218	SLD 8	-895	-18	2899	24.27	-27.7	0.07
218	SLD 9	-1135	81	3687	-73.89	-35.39	-0.32
218	SLD 10	-1135	81	3687	-73.89	-35.39	-0.32
218	SLD 11	-1457	-21	3011	27.48	-45.4	0.08
218	SLD 12	-1457	-21	3011	27.48	-45.4	0.08
218	SLD 13	-1904	41	3580	-34.67	-59.55	-0.16
218	SLD 14	-1904	41	3580	-34.67	-59.55	-0.16
218	SLD 15	-2000	10	3377	-4.26	-62.55	-0.04
218	SLD 16	-2000	10	3377	-4.26	-62.55	-0.04
218	SLV 1	1295	86	3113	-76.65	41.17	-0.34
218	SLV 2	1295	86	3113	-76.65	41.17	-0.34
218	SLV 3	1057	8	2599	1.07	33.76	-0.03
218	SLV 4	1057	8	2599	1.07	33.76	-0.03
218	SLV 5	39	167	4018	-158.24	1.52	-0.67
218	SLV 6	39	167	4018	-158.24	1.52	-0.67
218	SLV 7	-755	-95	2306	100.83	-23.2	0.38
218	SLV 8	-755	-95	2306	100.83	-23.2	0.38
218	SLV 9	-1275	158	4280	-150.46	-39.89	-0.63
218	SLV 10	-1275	158	4280	-150.46	-39.89	-0.63
218	SLV 11	-2069	-104	2568	108.62	-64.61	0.41
218	SLV 12	-2069	-104	2568	108.62	-64.61	0.41
218	SLV 13	-3087	56	3986	-50.7	-96.84	-0.23
218	SLV 14	-3087	56	3986	-50.7	-96.84	-0.23
218	SLV 15	-3325	-23	3473	27.03	-104.26	0.09
218	SLV 16	-3325	-23	3473	27.03	-104.26	0.09
219	SLU 1	-821	26	3214	-20.17	-26.78	-0.14
219	SLU 2	-795	25	3200	-19.12	-25.97	-0.14
219	SLU 3	-853	27	3279	-20.96	-27.84	-0.15
219	SLU 4	-837	27	3270	-20.33	-27.35	-0.14
219	SLU 5	-811	26	3241	-19.67	-26.51	-0.14
219	SLU 6	-870	28	3321	-21.51	-28.38	-0.15
219	SLU 7	-854	28	3312	-20.88	-27.89	-0.15
219	SLU 8	-854	28	3298	-21.27	-27.87	-0.15
219	SLU 9	-838	27	3289	-20.64	-27.38	-0.15
219	SLU 10	-1017	29	3743	-22.01	-33.02	-0.16
219	SLU 11	-1075	31	3823	-23.85	-34.89	-0.17
219	SLU 12	-1060	31	3814	-23.22	-34.4	-0.17
219	SLU 13	-1033	30	3785	-22.56	-33.56	-0.16
219	SLU 14	-1092	32	3865	-24.4	-35.43	-0.17
219	SLU 15	-1076	31	3856	-23.77	-34.94	-0.17
219	SLU 16	-1076	32	3842	-24.15	-34.92	-0.17
219	SLU 17	-1060	31	3833	-23.52	-34.43	-0.17
219	SLU 18	-1138	32	3992	-24.29	-36.86	-0.17
219	SLU 19	-1122	31	3983	-23.66	-36.37	-0.17
219	SLU 20	-1154	33	4033	-24.84	-37.4	-0.18
219	SLU 21	-1139	32	4024	-24.21	-36.91	-0.17
219	SLU 22	-1016	30	3678	-23.08	-33.02	-0.16
219	SLU 23	-990	29	3663	-22.03	-32.2	-0.16
219	SLU 24	-1049	31	3742	-23.87	-34.07	-0.17
219	SLU 25	-1033	31	3733	-23.24	-33.58	-0.17
219	SLU 26	-1006	30	3704	-22.58	-32.74	-0.16
219	SLU 27	-1065	32	3784	-24.42	-34.62	-0.17
219	SLU 28	-1049	31	3775	-23.79	-34.12	-0.17
219	SLU 29	-1049	32	3761	-24.18	-34.1	-0.17
219	SLU 30	-1033	31	3752	-23.55	-33.61	-0.17
219	SLU 31	-1212	33	4207	-24.91	-39.25	-0.18
219	SLU 32	-1271	35	4286	-26.76	-41.13	-0.19
219	SLU 33	-1255	35	4277	-26.13	-40.64	-0.19
219	SLU 34	-1229	34	4248	-25.46	-39.79	-0.18
219	SLU 35	-1287	36	4328	-27.3	-41.67	-0.19
219	SLU 36	-1271	35	4319	-26.68	-41.18	-0.19
219	SLU 37	-1271	36	4305	-27.06	-41.15	-0.19
219	SLU 38	-1255	35	4296	-26.43	-40.66	-0.19
219	SLU 39	-1334	36	4455	-27.2	-43.09	-0.19
219	SLU 40	-1318	35	4446	-26.57	-42.6	-0.19
219	SLU 41	-1350	37	4496	-27.75	-43.63	-0.2
219	SLU 42	-1334	36	4487	-27.12	-43.14	-0.19
219	SLU 43	-1000	33	4020	-25.22	-32.68	-0.18
219	SLU 44	-974	32	4005	-24.18	-31.86	-0.17
219	SLU 45	-1032	34	4084	-26.02	-33.74	-0.18
219	SLU 46	-1017	33	4075	-25.39	-33.25	-0.18
219	SLU 47	-990	33	4047	-24.72	-32.41	-0.18
219	SLU 48	-1049	35	4126	-26.57	-34.28	-0.19
219	SLU 49	-1033	34	4117	-25.94	-33.79	-0.18
219	SLU 50	-1033	34	4104	-26.32	-33.77	-0.19
219	SLU 51	-1017	34	4095	-25.69	-33.28	-0.18

Nodo	Cont.	Reazione a traslazione			Reazione a rotazione		
Ind.	N.br.	x	y	z	x	y	z
219	SLU 52	-1196	36	4549	-27.06	-38.92	-0.19
219	SLU 53	-1254	38	4628	-28.9	-40.79	-0.2
219	SLU 54	-1239	37	4619	-28.27	-40.3	-0.2
219	SLU 55	-1212	37	4591	-27.61	-39.46	-0.2
219	SLU 56	-1271	39	4670	-29.45	-41.33	-0.21
219	SLU 57	-1255	38	4661	-28.82	-40.84	-0.21
219	SLU 58	-1255	38	4648	-29.21	-40.82	-0.21
219	SLU 59	-1239	38	4639	-28.58	-40.33	-0.2
219	SLU 60	-1317	39	4797	-29.35	-42.76	-0.21
219	SLU 61	-1302	38	4788	-28.72	-42.27	-0.2
219	SLU 62	-1334	39	4839	-29.9	-43.3	-0.21
219	SLU 63	-1318	39	4830	-29.27	-42.81	-0.21
219	SLU 64	-1195	37	4483	-28.13	-38.91	-0.2
219	SLU 65	-1169	36	4468	-27.08	-38.1	-0.19
219	SLU 66	-1228	38	4548	-28.92	-39.97	-0.2
219	SLU 67	-1212	37	4539	-28.29	-39.48	-0.2
219	SLU 68	-1186	37	4510	-27.63	-38.64	-0.2
219	SLU 69	-1244	39	4589	-29.47	-40.51	-0.21
219	SLU 70	-1229	38	4580	-28.84	-40.02	-0.21
219	SLU 71	-1228	38	4567	-29.23	-40	-0.21
219	SLU 72	-1213	38	4558	-28.6	-39.51	-0.2
219	SLU 73	-1391	40	5012	-29.97	-45.15	-0.21
219	SLU 74	-1450	42	5091	-31.81	-47.02	-0.23
219	SLU 75	-1434	41	5083	-31.18	-46.53	-0.22
219	SLU 76	-1408	40	5054	-30.52	-45.69	-0.22
219	SLU 77	-1466	43	5133	-32.36	-47.57	-0.23
219	SLU 78	-1451	42	5124	-31.73	-47.08	-0.23
219	SLU 79	-1450	42	5111	-32.12	-47.05	-0.23
219	SLU 80	-1435	42	5102	-31.49	-46.56	-0.22
219	SLU 81	-1513	42	5260	-32.26	-48.99	-0.23
219	SLU 82	-1497	42	5251	-31.63	-48.5	-0.23
219	SLU 83	-1529	43	5302	-32.8	-49.53	-0.23
219	SLU 84	-1513	43	5293	-32.17	-49.04	-0.23
219	SLE RA 1	-877	28	3347	-21	-28.56	-0.15
219	SLE RA 2	-859	27	3337	-20.3	-28.02	-0.14
219	SLE RA 3	-898	28	3390	-21.53	-29.27	-0.15
219	SLE RA 4	-888	28	3384	-21.11	-28.94	-0.15
219	SLE RA 5	-870	27	3365	-20.67	-28.38	-0.15
219	SLE RA 6	-909	29	3418	-21.89	-29.63	-0.15
219	SLE RA 7	-899	28	3412	-21.48	-29.3	-0.15
219	SLE RA 8	-898	29	3402	-21.73	-29.29	-0.15
219	SLE RA 9	-888	28	3396	-21.31	-28.96	-0.15
219	SLE RA 10	-1007	29	3699	-22.23	-32.72	-0.16
219	SLE RA 11	-1046	31	3752	-23.45	-33.97	-0.17
219	SLE RA 12	-1036	30	3746	-23.03	-33.64	-0.16
219	SLE RA 13	-1018	30	3727	-22.59	-33.08	-0.16
219	SLE RA 14	-1057	31	3780	-23.82	-34.33	-0.17
219	SLE RA 15	-1047	31	3774	-23.4	-34	-0.17
219	SLE RA 16	-1047	31	3765	-23.66	-33.99	-0.17
219	SLE RA 17	-1036	31	3759	-23.24	-33.66	-0.17
219	SLE RA 18	-1088	31	3865	-23.75	-35.28	-0.17
219	SLE RA 19	-1078	31	3859	-23.33	-34.95	-0.17
219	SLE RA 20	-1099	32	3893	-24.12	-35.64	-0.17
219	SLE RA 21	-1089	31	3887	-23.7	-35.32	-0.17
219	SLE FR 1	-877	28	3347	-21	-28.56	-0.15
219	SLE FR 2	-873	27	3345	-20.86	-28.46	-0.15
219	SLE FR 3	-881	28	3358	-21.15	-28.71	-0.15
219	SLE FR 4	-937	29	3500	-21.69	-30.47	-0.15
219	SLE FR 5	-944	29	3513	-21.97	-30.72	-0.16
219	SLE FR 6	-982	29	3606	-22.38	-31.92	-0.16
219	SLE QP 1	-877	28	3347	-21	-28.56	-0.15
219	SLE QP 2	-940	29	3502	-21.83	-30.58	-0.15
219	SLD 1	-85	35	3281	-40.42	-3.75	-0.26
219	SLD 2	-85	35	3281	-40.42	-3.75	-0.26
219	SLD 3	6	9	3093	-13.59	-0.89	-0.12
219	SLD 4	6	9	3093	-13.59	-0.89	-0.12
219	SLD 5	-823	70	3720	-68.08	-26.87	-0.4
219	SLD 6	-823	70	3720	-68.08	-26.87	-0.4
219	SLD 7	-517	-17	3095	21.32	-17.34	0.07
219	SLD 8	-517	-17	3095	21.32	-17.34	0.07
219	SLD 9	-1363	74	3909	-64.97	-43.82	-0.38
219	SLD 10	-1363	74	3909	-64.97	-43.82	-0.38
219	SLD 11	-1057	-13	3284	24.43	-34.29	0.09
219	SLD 12	-1057	-13	3284	24.43	-34.29	0.09
219	SLD 13	-1886	48	3911	-30.06	-60.27	-0.19
219	SLD 14	-1886	48	3911	-30.06	-60.27	-0.19
219	SLD 15	-1795	22	3723	-3.24	-57.41	-0.05
219	SLD 16	-1795	22	3723	-3.24	-57.41	-0.05
219	SLV 1	1053	47	3001	-68.6	31.97	-0.42
219	SLV 2	1053	47	3001	-68.6	31.97	-0.42
219	SLV 3	1279	-20	2526	-0.07	39.04	-0.05
219	SLV 4	1279	-20	2526	-0.07	39.04	-0.05
219	SLV 5	-685	135	4072	-139.8	-22.54	-0.78
219	SLV 6	-685	135	4072	-139.8	-22.54	-0.78
219	SLV 7	69	-87	2489	88.64	1.03	0.42
219	SLV 8	69	-87	2489	88.64	1.03	0.42
219	SLV 9	-1949	145	4515	-132.29	-62.18	-0.73
219	SLV 10	-1949	145	4515	-132.29	-62.18	-0.73
219	SLV 11	-1195	-78	2932	96.15	-38.62	0.47
219	SLV 12	-1195	-78	2932	96.15	-38.62	0.47

Nodo	Cont.	Reazione a traslazione			Reazione a rotazione		
Ind.	N.br.	x	y	z	x	y	z
219	SLV 13	-3159	77	4478	-43.58	-100.19	-0.25
219	SLV 14	-3159	77	4478	-43.58	-100.19	-0.25
219	SLV 15	-2933	11	4003	24.95	-93.13	0.11
219	SLV 16	-2933	11	4003	24.95	-93.13	0.11
220	SLU 1	-730	22	3533	-16.52	-23.32	-0.19
220	SLU 2	-707	21	3515	-15.5	-22.61	-0.18
220	SLU 3	-757	23	3611	-17.17	-24.19	-0.19
220	SLU 4	-743	22	3600	-16.56	-23.77	-0.19
220	SLU 5	-720	21	3564	-15.95	-23.04	-0.18
220	SLU 6	-770	23	3660	-17.62	-24.62	-0.2
220	SLU 7	-756	23	3649	-17	-24.19	-0.19
220	SLU 8	-756	23	3632	-17.42	-24.16	-0.2
220	SLU 9	-742	22	3621	-16.8	-23.74	-0.19
220	SLU 10	-923	24	4092	-17.82	-29.34	-0.2
220	SLU 11	-972	26	4188	-19.49	-30.92	-0.22
220	SLU 12	-959	25	4177	-18.88	-30.5	-0.21
220	SLU 13	-936	24	4142	-18.27	-29.76	-0.21
220	SLU 14	-985	26	4238	-19.93	-31.34	-0.23
220	SLU 15	-972	26	4227	-19.32	-30.92	-0.22
220	SLU 16	-971	26	4210	-19.73	-30.89	-0.22
220	SLU 17	-958	25	4199	-19.12	-30.47	-0.22
220	SLU 18	-1037	26	4358	-19.83	-32.93	-0.23
220	SLU 19	-1024	26	4347	-19.22	-32.51	-0.22
220	SLU 20	-1050	27	4408	-20.28	-33.35	-0.23
220	SLU 21	-1037	26	4396	-19.67	-32.93	-0.22
220	SLU 22	-915	25	4034	-18.87	-29.14	-0.21
220	SLU 23	-893	24	4015	-17.85	-28.43	-0.2
220	SLU 24	-942	26	4111	-19.52	-30.01	-0.22
220	SLU 25	-929	25	4100	-18.9	-29.59	-0.22
220	SLU 26	-906	24	4065	-18.3	-28.85	-0.21
220	SLU 27	-955	26	4161	-19.96	-30.43	-0.23
220	SLU 28	-942	26	4150	-19.35	-30.01	-0.22
220	SLU 29	-941	26	4133	-19.76	-29.98	-0.22
220	SLU 30	-928	25	4122	-19.15	-29.56	-0.22
220	SLU 31	-1108	27	4593	-20.17	-35.16	-0.23
220	SLU 32	-1157	29	4689	-21.83	-36.74	-0.25
220	SLU 33	-1144	28	4678	-21.22	-36.31	-0.24
220	SLU 34	-1121	28	4642	-20.61	-35.58	-0.24
220	SLU 35	-1171	30	4738	-22.28	-37.16	-0.25
220	SLU 36	-1157	29	4727	-21.67	-36.73	-0.25
220	SLU 37	-1156	29	4710	-22.08	-36.71	-0.25
220	SLU 38	-1143	29	4699	-21.47	-36.28	-0.24
220	SLU 39	-1223	29	4858	-22.18	-38.75	-0.25
220	SLU 40	-1209	29	4847	-21.57	-38.32	-0.25
220	SLU 41	-1236	30	4908	-22.63	-39.17	-0.26
220	SLU 42	-1222	29	4897	-22.01	-38.74	-0.25
220	SLU 43	-885	27	4422	-20.68	-28.32	-0.23
220	SLU 44	-863	26	4403	-19.66	-27.62	-0.22
220	SLU 45	-912	28	4499	-21.32	-29.2	-0.24
220	SLU 46	-899	27	4488	-20.71	-28.77	-0.23
220	SLU 47	-876	27	4453	-20.1	-28.04	-0.23
220	SLU 48	-925	29	4549	-21.77	-29.62	-0.25
220	SLU 49	-912	28	4538	-21.16	-29.19	-0.24
220	SLU 50	-911	28	4521	-21.57	-29.17	-0.24
220	SLU 51	-898	28	4510	-20.96	-28.74	-0.24
220	SLU 52	-1078	29	4980	-21.97	-34.34	-0.25
220	SLU 53	-1127	31	5076	-23.64	-35.92	-0.27
220	SLU 54	-1114	31	5065	-23.03	-35.5	-0.26
220	SLU 55	-1091	30	5030	-22.42	-34.76	-0.26
220	SLU 56	-1140	32	5126	-24.09	-36.34	-0.27
220	SLU 57	-1127	31	5115	-23.47	-35.92	-0.27
220	SLU 58	-1126	32	5098	-23.89	-35.89	-0.27
220	SLU 59	-1113	31	5087	-23.27	-35.47	-0.26
220	SLU 60	-1192	32	5246	-23.99	-37.93	-0.27
220	SLU 61	-1179	31	5235	-23.37	-37.51	-0.27
220	SLU 62	-1206	32	5296	-24.43	-38.35	-0.28
220	SLU 63	-1192	32	5285	-23.82	-37.93	-0.27
220	SLU 64	-1070	30	4922	-23.02	-34.14	-0.26
220	SLU 65	-1048	29	4904	-22	-33.43	-0.25
220	SLU 66	-1097	31	5000	-23.67	-35.01	-0.27
220	SLU 67	-1084	31	4989	-23.06	-34.59	-0.26
220	SLU 68	-1061	30	4953	-22.45	-33.85	-0.26
220	SLU 69	-1110	32	5049	-24.11	-35.43	-0.27
220	SLU 70	-1097	31	5038	-23.5	-35.01	-0.27
220	SLU 71	-1096	32	5021	-23.91	-34.98	-0.27
220	SLU 72	-1083	31	5010	-23.3	-34.56	-0.26
220	SLU 73	-1263	32	5481	-24.32	-40.16	-0.28
220	SLU 74	-1313	34	5577	-25.99	-41.74	-0.29
220	SLU 75	-1299	34	5566	-25.37	-41.31	-0.29
220	SLU 76	-1276	33	5531	-24.77	-40.58	-0.28
220	SLU 77	-1326	35	5627	-26.43	-42.16	-0.3
220	SLU 78	-1312	34	5615	-25.82	-41.74	-0.29
220	SLU 79	-1312	35	5599	-26.23	-41.71	-0.3
220	SLU 80	-1298	34	5587	-25.62	-41.28	-0.29
220	SLU 81	-1378	35	5747	-26.33	-43.75	-0.3
220	SLU 82	-1365	34	5736	-25.72	-43.32	-0.29
220	SLU 83	-1391	35	5796	-26.78	-44.17	-0.3
220	SLU 84	-1378	35	5785	-26.17	-43.75	-0.3
220	SLE RA 1	-783	23	3676	-17.19	-24.98	-0.19
220	SLE RA 2	-768	22	3664	-16.51	-24.51	-0.19

Nodo	Cont.	Reazione a traslazione			Reazione a rotazione		
Ind.	N.br.	x	y	z	x	y	z
220	SLE RA 3	-801	23	3728	-17.62	-25.57	-0.2
220	SLE RA 4	-792	23	3721	-17.22	-25.28	-0.2
220	SLE RA 5	-776	22	3697	-16.81	-24.79	-0.19
220	SLE RA 6	-809	24	3761	-17.92	-25.85	-0.2
220	SLE RA 7	-800	23	3754	-17.51	-25.56	-0.2
220	SLE RA 8	-800	23	3742	-17.79	-25.55	-0.2
220	SLE RA 9	-791	23	3735	-17.38	-25.26	-0.2
220	SLE RA 10	-911	24	4049	-18.06	-29	-0.21
220	SLE RA 11	-944	25	4113	-19.17	-30.05	-0.22
220	SLE RA 12	-935	25	4105	-18.76	-29.77	-0.21
220	SLE RA 13	-920	24	4082	-18.36	-29.28	-0.21
220	SLE RA 14	-953	26	4146	-19.47	-30.33	-0.22
220	SLE RA 15	-944	25	4138	-19.06	-30.05	-0.22
220	SLE RA 16	-944	26	4127	-19.33	-30.03	-0.22
220	SLE RA 17	-935	25	4120	-18.93	-29.75	-0.21
220	SLE RA 18	-988	26	4226	-19.4	-31.39	-0.22
220	SLE RA 19	-979	25	4219	-18.99	-31.11	-0.22
220	SLE RA 20	-996	26	4259	-19.7	-31.67	-0.22
220	SLE RA 21	-987	26	4252	-19.29	-31.39	-0.22
220	SLE FR 1	-783	23	3676	-17.19	-24.98	-0.19
220	SLE FR 2	-780	23	3674	-17.06	-24.89	-0.19
220	SLE FR 3	-786	23	3689	-17.31	-25.1	-0.2
220	SLE FR 4	-841	23	3839	-17.72	-26.81	-0.2
220	SLE FR 5	-848	24	3854	-17.97	-27.02	-0.2
220	SLE FR 6	-885	24	3951	-18.3	-28.19	-0.21
220	SLE QP 1	-783	23	3676	-17.19	-24.98	-0.19
220	SLE QP 2	-844	24	3841	-17.86	-26.91	-0.2
220	SLD 1	-30	27	3422	-33.25	-0.97	-0.24
220	SLD 2	-30	27	3422	-33.25	-0.97	-0.24
220	SLD 3	58	8	3271	-11.73	1.88	-0.07
220	SLD 4	58	8	3271	-11.73	1.88	-0.07
220	SLD 5	-734	54	3944	-55.11	-23.45	-0.47
220	SLD 6	-734	54	3944	-55.11	-23.45	-0.47
220	SLD 7	-439	-11	3442	16.62	-13.95	0.09
220	SLD 8	-439	-11	3442	16.62	-13.95	0.09
220	SLD 9	-1249	58	4241	-52.33	-39.86	-0.5
220	SLD 10	-1249	58	4241	-52.33	-39.86	-0.5
220	SLD 11	-954	-7	3739	19.4	-30.36	0.06
220	SLD 12	-954	-7	3739	19.4	-30.36	0.06
220	SLD 13	-1746	39	4411	-23.98	-55.69	-0.34
220	SLD 14	-1746	39	4411	-23.98	-55.69	-0.34
220	SLD 15	-1658	20	4260	-2.46	-52.84	-0.17
220	SLD 16	-1658	20	4260	-2.46	-52.84	-0.17
220	SLV 1	1053	34	2873	-56.5	33.56	-0.3
220	SLV 2	1053	34	2873	-56.5	33.56	-0.3
220	SLV 3	1271	-15	2492	-1.54	40.6	0.13
220	SLV 4	1271	-15	2492	-1.54	40.6	0.13
220	SLV 5	-606	102	4129	-112.79	-19.45	-0.88
220	SLV 6	-606	102	4129	-112.79	-19.45	-0.88
220	SLV 7	121	-63	2859	70.38	4.03	0.55
220	SLV 8	121	-63	2859	70.38	4.03	0.55
220	SLV 9	-1809	110	4824	-106.09	-57.84	-0.95
220	SLV 10	-1809	110	4824	-106.09	-57.84	-0.95
220	SLV 11	-1083	-55	3554	77.08	-34.36	0.48
220	SLV 12	-1083	-55	3554	77.08	-34.36	0.48
220	SLV 13	-2960	62	5190	-34.17	-94.41	-0.53
220	SLV 14	-2960	62	5190	-34.17	-94.41	-0.53
220	SLV 15	-2742	13	4809	20.78	-87.37	-0.1
220	SLV 16	-2742	13	4809	20.78	-87.37	-0.1
221	SLU 1	-727	15	3960	-11.9	-26.43	-0.21
221	SLU 2	-708	14	3934	-10.99	-25.75	-0.2
221	SLU 3	-752	16	4055	-12.36	-27.36	-0.22
221	SLU 4	-740	15	4040	-11.82	-26.95	-0.21
221	SLU 5	-719	14	3994	-11.31	-26.21	-0.2
221	SLU 6	-764	16	4116	-12.68	-27.81	-0.22
221	SLU 7	-752	15	4100	-12.14	-27.41	-0.22
221	SLU 8	-751	16	4081	-12.54	-27.34	-0.22
221	SLU 9	-739	15	4065	-11.99	-26.93	-0.21
221	SLU 10	-930	16	4558	-12.63	-33.45	-0.23
221	SLU 11	-974	18	4679	-14	-35.06	-0.25
221	SLU 12	-963	17	4663	-13.45	-34.65	-0.24
221	SLU 13	-942	16	4618	-12.95	-33.9	-0.23
221	SLU 14	-986	18	4739	-14.32	-35.51	-0.26
221	SLU 15	-975	17	4724	-13.77	-35.1	-0.25
221	SLU 16	-973	18	4704	-14.17	-35.03	-0.25
221	SLU 17	-961	17	4689	-13.63	-34.63	-0.24
221	SLU 18	-1045	18	4851	-14.23	-37.42	-0.25
221	SLU 19	-1033	17	4835	-13.69	-37.02	-0.25
221	SLU 20	-1056	18	4911	-14.55	-37.88	-0.26
221	SLU 21	-1045	18	4896	-14.01	-37.47	-0.25
221	SLU 22	-916	17	4512	-13.56	-33.02	-0.24
221	SLU 23	-896	16	4486	-12.66	-32.34	-0.23
221	SLU 24	-941	18	4607	-14.02	-33.95	-0.25
221	SLU 25	-929	17	4592	-13.48	-33.55	-0.24
221	SLU 26	-908	16	4547	-12.98	-32.8	-0.23
221	SLU 27	-953	18	4668	-14.34	-34.4	-0.26
221	SLU 28	-941	17	4652	-13.8	-34	-0.25
221	SLU 29	-939	18	4633	-14.2	-33.93	-0.25
221	SLU 30	-928	17	4617	-13.66	-33.52	-0.24
221	SLU 31	-1119	18	5110	-14.29	-40.04	-0.26

Nodo	Cont.	Reazione a traslazione			Reazione a rotazione		
Ind.	N.br.	x	y	z	x	y	z
221	SLU 32	-1163	20	5231	-15.66	-41.65	-0.28
221	SLU 33	-1151	19	5216	-15.12	-41.24	-0.27
221	SLU 34	-1130	18	5170	-14.61	-40.49	-0.26
221	SLU 35	-1175	20	5292	-15.98	-42.1	-0.29
221	SLU 36	-1163	19	5276	-15.44	-41.69	-0.28
221	SLU 37	-1162	20	5257	-15.83	-41.62	-0.28
221	SLU 38	-1150	19	5241	-15.29	-41.22	-0.27
221	SLU 39	-1233	20	5403	-15.9	-44.01	-0.28
221	SLU 40	-1222	19	5388	-15.35	-43.61	-0.28
221	SLU 41	-1245	20	5464	-16.21	-44.47	-0.29
221	SLU 42	-1233	20	5448	-15.67	-44.06	-0.28
221	SLU 43	-880	19	4958	-14.9	-32.1	-0.26
221	SLU 44	-861	17	4933	-13.99	-31.42	-0.25
221	SLU 45	-906	19	5054	-15.36	-33.03	-0.27
221	SLU 46	-894	19	5038	-14.82	-32.62	-0.26
221	SLU 47	-873	18	4993	-14.31	-31.88	-0.25
221	SLU 48	-917	20	5114	-15.68	-33.48	-0.28
221	SLU 49	-906	19	5099	-15.14	-33.08	-0.27
221	SLU 50	-904	19	5079	-15.54	-33.01	-0.28
221	SLU 51	-892	19	5064	-14.99	-32.6	-0.27
221	SLU 52	-1083	20	5556	-15.63	-39.12	-0.28
221	SLU 53	-1128	21	5678	-17	-40.73	-0.3
221	SLU 54	-1116	21	5662	-16.45	-40.32	-0.29
221	SLU 55	-1095	20	5617	-15.95	-39.57	-0.28
221	SLU 56	-1140	22	5738	-17.32	-41.18	-0.31
221	SLU 57	-1128	21	5722	-16.77	-40.77	-0.3
221	SLU 58	-1126	22	5703	-17.17	-40.7	-0.31
221	SLU 59	-1115	21	5687	-16.63	-40.3	-0.3
221	SLU 60	-1198	22	5849	-17.23	-43.09	-0.31
221	SLU 61	-1186	21	5834	-16.69	-42.69	-0.3
221	SLU 62	-1210	22	5910	-17.55	-43.55	-0.31
221	SLU 63	-1198	21	5894	-17.01	-43.14	-0.3
221	SLU 64	-1069	21	5511	-16.56	-38.69	-0.29
221	SLU 65	-1050	20	5485	-15.66	-38.01	-0.28
221	SLU 66	-1094	21	5606	-17.02	-39.62	-0.3
221	SLU 67	-1083	21	5591	-16.48	-39.22	-0.29
221	SLU 68	-1062	20	5545	-15.97	-38.47	-0.28
221	SLU 69	-1106	22	5666	-17.34	-40.07	-0.31
221	SLU 70	-1094	21	5651	-16.8	-39.67	-0.3
221	SLU 71	-1093	22	5631	-17.2	-39.6	-0.31
221	SLU 72	-1081	21	5616	-16.66	-39.19	-0.3
221	SLU 73	-1272	22	6109	-17.29	-45.71	-0.31
221	SLU 74	-1317	23	6230	-18.66	-47.32	-0.33
221	SLU 75	-1305	23	6214	-18.12	-46.91	-0.32
221	SLU 76	-1284	22	6169	-17.61	-46.16	-0.31
221	SLU 77	-1328	24	6290	-18.98	-47.77	-0.34
221	SLU 78	-1317	23	6275	-18.44	-47.36	-0.33
221	SLU 79	-1315	24	6255	-18.83	-47.29	-0.34
221	SLU 80	-1303	23	6240	-18.29	-46.89	-0.33
221	SLU 81	-1387	24	6402	-18.89	-49.68	-0.34
221	SLU 82	-1375	23	6386	-18.35	-49.28	-0.33
221	SLU 83	-1398	24	6462	-19.21	-50.14	-0.34
221	SLU 84	-1387	23	6447	-18.67	-49.73	-0.33
221	SLE RA 1	-781	16	4118	-12.37	-28.31	-0.22
221	SLE RA 2	-768	15	4100	-11.77	-27.86	-0.21
221	SLE RA 3	-798	16	4181	-12.68	-28.93	-0.23
221	SLE RA 4	-790	15	4171	-12.32	-28.66	-0.22
221	SLE RA 5	-776	15	4141	-11.98	-28.16	-0.21
221	SLE RA 6	-806	16	4221	-12.9	-29.24	-0.23
221	SLE RA 7	-798	16	4211	-12.53	-28.96	-0.22
221	SLE RA 8	-797	16	4198	-12.8	-28.92	-0.23
221	SLE RA 9	-789	16	4188	-12.44	-28.65	-0.22
221	SLE RA 10	-916	16	4516	-12.86	-32.99	-0.23
221	SLE RA 11	-946	17	4597	-13.77	-34.06	-0.25
221	SLE RA 12	-938	17	4587	-13.41	-33.79	-0.24
221	SLE RA 13	-924	16	4556	-13.07	-33.3	-0.23
221	SLE RA 14	-954	18	4637	-13.98	-34.37	-0.25
221	SLE RA 15	-946	17	4627	-13.62	-34.1	-0.24
221	SLE RA 16	-945	17	4614	-13.89	-34.05	-0.25
221	SLE RA 17	-937	17	4604	-13.53	-33.78	-0.24
221	SLE RA 18	-993	18	4712	-13.93	-35.64	-0.25
221	SLE RA 19	-985	17	4701	-13.57	-35.37	-0.24
221	SLE RA 20	-1001	18	4752	-14.14	-35.94	-0.25
221	SLE RA 21	-993	17	4742	-13.78	-35.67	-0.25
221	SLE FR 1	-781	16	4118	-12.37	-28.31	-0.22
221	SLE FR 2	-778	15	4114	-12.25	-28.22	-0.22
221	SLE FR 3	-784	16	4134	-12.46	-28.43	-0.22
221	SLE FR 4	-842	16	4292	-12.72	-30.42	-0.23
221	SLE FR 5	-848	16	4312	-12.92	-30.63	-0.23
221	SLE FR 6	-887	17	4415	-13.15	-31.98	-0.23
221	SLE QP 1	-781	16	4118	-12.37	-28.31	-0.22
221	SLE QP 2	-844	16	4296	-12.84	-30.51	-0.23
221	SLD 1	-58	17	3617	-24.05	-3.69	-0.24
221	SLD 2	-58	17	3617	-24.05	-3.69	-0.24
221	SLD 3	29	6	3518	-9	-0.68	-0.08
221	SLD 4	29	6	3518	-9	-0.68	-0.08
221	SLD 5	-742	33	4241	-39.02	-27.03	-0.48
221	SLD 6	-742	33	4241	-39.02	-27.03	-0.48
221	SLD 7	-449	-4	3913	11.13	-17	0.06
221	SLD 8	-449	-4	3913	11.13	-17	0.06

Nodo	Cont.	Reazione a traslazione			Reazione a rotazione		
Ind.	N.br.	x	y	z	x	y	z
221	SLD 9	-1240	36	4678	-36.81	-44.02	-0.51
221	SLD 10	-1240	36	4678	-36.81	-44.02	-0.51
221	SLD 11	-947	-1	4351	13.34	-34	0.02
221	SLD 12	-947	-1	4351	13.34	-34	0.02
221	SLD 13	-1718	26	5073	-16.68	-60.34	-0.37
221	SLD 14	-1718	26	5073	-16.68	-60.34	-0.37
221	SLD 15	-1630	15	4975	-1.63	-57.34	-0.21
221	SLD 16	-1630	15	4975	-1.63	-57.34	-0.21
221	SLV 1	988	19	2714	-40.93	32.01	-0.28
221	SLV 2	988	19	2714	-40.93	32.01	-0.28
221	SLV 3	1204	-9	2466	-2.52	39.44	0.13
221	SLV 4	1204	-9	2466	-2.52	39.44	0.13
221	SLV 5	-623	60	4197	-79.51	-23.02	-0.86
221	SLV 6	-623	60	4197	-79.51	-23.02	-0.86
221	SLV 7	98	-34	3372	48.5	1.74	0.5
221	SLV 8	98	-34	3372	48.5	1.74	0.5
221	SLV 9	-1787	67	5220	-74.17	-62.77	-0.95
221	SLV 10	-1787	67	5220	-74.17	-62.77	-0.95
221	SLV 11	-1066	-28	4395	53.83	-38	0.4
221	SLV 12	-1066	-28	4395	53.83	-38	0.4
221	SLV 13	-2893	42	6125	-23.15	-100.47	-0.58
221	SLV 14	-2893	42	6125	-23.15	-100.47	-0.58
221	SLV 15	-2677	13	5878	15.25	-93.04	-0.18
221	SLV 16	-2677	13	5878	15.25	-93.04	-0.18
222	SLU 1	-790	5	4522	-6.63	-31.03	-0.16
222	SLU 2	-772	4	4484	-5.99	-30.31	-0.14
222	SLU 3	-815	6	4641	-6.89	-32.03	-0.16
222	SLU 4	-804	5	4618	-6.51	-31.6	-0.15
222	SLU 5	-784	4	4559	-6.17	-30.78	-0.14
222	SLU 6	-826	6	4716	-7.07	-32.51	-0.17
222	SLU 7	-816	5	4693	-6.68	-32.07	-0.16
222	SLU 8	-813	6	4671	-6.99	-31.97	-0.17
222	SLU 9	-802	5	4649	-6.6	-31.54	-0.16
222	SLU 10	-1008	5	5172	-6.88	-39.52	-0.16
222	SLU 11	-1051	6	5329	-7.78	-41.24	-0.19
222	SLU 12	-1041	6	5306	-7.39	-40.81	-0.18
222	SLU 13	-1020	5	5247	-7.05	-39.99	-0.17
222	SLU 14	-1063	6	5404	-7.96	-41.72	-0.19
222	SLU 15	-1052	6	5381	-7.57	-41.28	-0.18
222	SLU 16	-1050	6	5359	-7.88	-41.18	-0.19
222	SLU 17	-1039	6	5337	-7.49	-40.75	-0.18
222	SLU 18	-1127	6	5505	-7.9	-44.18	-0.19
222	SLU 19	-1117	6	5482	-7.51	-43.75	-0.18
222	SLU 20	-1139	6	5579	-8.08	-44.66	-0.19
222	SLU 21	-1129	6	5557	-7.69	-44.23	-0.18
222	SLU 22	-989	6	5145	-7.54	-38.81	-0.18
222	SLU 23	-971	5	5107	-6.9	-38.09	-0.16
222	SLU 24	-1014	6	5264	-7.8	-39.82	-0.19
222	SLU 25	-1003	6	5241	-7.41	-39.39	-0.18
222	SLU 26	-983	5	5182	-7.07	-38.56	-0.17
222	SLU 27	-1026	6	5338	-7.98	-40.29	-0.19
222	SLU 28	-1015	6	5316	-7.59	-39.86	-0.18
222	SLU 29	-1012	6	5294	-7.9	-39.76	-0.19
222	SLU 30	-1002	6	5272	-7.51	-39.33	-0.18
222	SLU 31	-1208	6	5795	-7.78	-47.3	-0.18
222	SLU 32	-1250	7	5952	-8.68	-49.03	-0.21
222	SLU 33	-1240	6	5929	-8.3	-48.6	-0.2
222	SLU 34	-1219	6	5870	-7.96	-47.78	-0.19
222	SLU 35	-1262	7	6027	-8.86	-49.5	-0.21
222	SLU 36	-1252	6	6004	-8.48	-49.07	-0.2
222	SLU 37	-1249	7	5982	-8.78	-48.97	-0.21
222	SLU 38	-1238	6	5960	-8.4	-48.54	-0.2
222	SLU 39	-1327	7	6127	-8.81	-51.97	-0.21
222	SLU 40	-1316	6	6105	-8.42	-51.54	-0.2
222	SLU 41	-1339	7	6202	-8.98	-52.44	-0.22
222	SLU 42	-1328	7	6180	-8.6	-52.01	-0.21
222	SLU 43	-958	7	5665	-8.31	-37.66	-0.2
222	SLU 44	-940	6	5627	-7.67	-36.94	-0.18
222	SLU 45	-983	7	5784	-8.57	-38.67	-0.2
222	SLU 46	-973	6	5761	-8.19	-38.24	-0.19
222	SLU 47	-952	6	5702	-7.85	-37.42	-0.18
222	SLU 48	-995	7	5859	-8.75	-39.14	-0.21
222	SLU 49	-984	6	5836	-8.36	-38.71	-0.2
222	SLU 50	-982	7	5814	-8.67	-38.61	-0.21
222	SLU 51	-971	6	5792	-8.28	-38.18	-0.2
222	SLU 52	-1177	6	6315	-8.55	-46.15	-0.2
222	SLU 53	-1220	8	6472	-9.46	-47.88	-0.23
222	SLU 54	-1209	7	6449	-9.07	-47.45	-0.22
222	SLU 55	-1189	6	6390	-8.73	-46.63	-0.21
222	SLU 56	-1232	8	6547	-9.64	-48.36	-0.23
222	SLU 57	-1221	7	6524	-9.25	-47.92	-0.22
222	SLU 58	-1218	8	6502	-9.56	-47.82	-0.23
222	SLU 59	-1208	7	6480	-9.17	-47.39	-0.22
222	SLU 60	-1296	8	6648	-9.58	-50.82	-0.23
222	SLU 61	-1285	7	6625	-9.19	-50.39	-0.22
222	SLU 62	-1308	8	6722	-9.76	-51.3	-0.23
222	SLU 63	-1297	7	6700	-9.37	-50.86	-0.22
222	SLU 64	-1157	7	6288	-9.22	-45.45	-0.22
222	SLU 65	-1140	6	6250	-8.58	-44.73	-0.2
222	SLU 66	-1182	8	6407	-9.48	-46.46	-0.23

Nodo	Cont.	Reazione a traslazione			Reazione a rotazione		
Ind.	N.br.	x	y	z	x	y	z
222	SLU 67	-1172	7	6384	-9.09	-46.02	-0.22
222	SLU 68	-1151	7	6325	-8.75	-45.2	-0.21
222	SLU 69	-1194	8	6481	-9.66	-46.93	-0.23
222	SLU 70	-1184	7	6459	-9.27	-46.5	-0.22
222	SLU 71	-1181	8	6437	-9.58	-46.4	-0.23
222	SLU 72	-1170	7	6415	-9.19	-45.97	-0.22
222	SLU 73	-1376	7	6938	-9.46	-53.94	-0.22
222	SLU 74	-1419	8	7095	-10.36	-55.67	-0.25
222	SLU 75	-1408	8	7072	-9.98	-55.24	-0.24
222	SLU 76	-1388	7	7013	-9.64	-54.41	-0.23
222	SLU 77	-1431	8	7170	-10.54	-56.14	-0.25
222	SLU 78	-1420	8	7147	-10.16	-55.71	-0.24
222	SLU 79	-1417	8	7125	-10.46	-55.61	-0.25
222	SLU 80	-1407	8	7103	-10.08	-55.18	-0.24
222	SLU 81	-1495	8	7270	-10.48	-58.61	-0.25
222	SLU 82	-1485	8	7248	-10.1	-58.18	-0.24
222	SLU 83	-1507	8	7345	-10.66	-59.08	-0.26
222	SLU 84	-1496	8	7323	-10.28	-58.65	-0.25
222	SLE RA 1	-846	6	4700	-6.89	-33.25	-0.16
222	SLE RA 2	-835	5	4675	-6.46	-32.77	-0.15
222	SLE RA 3	-863	6	4779	-7.07	-33.92	-0.17
222	SLE RA 4	-856	5	4764	-6.81	-33.63	-0.16
222	SLE RA 5	-842	5	4725	-6.58	-33.09	-0.16
222	SLE RA 6	-871	6	4829	-7.18	-34.24	-0.17
222	SLE RA 7	-864	5	4814	-6.93	-33.95	-0.16
222	SLE RA 8	-862	6	4799	-7.13	-33.88	-0.17
222	SLE RA 9	-855	5	4784	-6.87	-33.59	-0.16
222	SLE RA 10	-992	5	5133	-7.05	-38.91	-0.17
222	SLE RA 11	-1021	6	5238	-7.66	-40.06	-0.18
222	SLE RA 12	-1014	6	5223	-7.4	-39.77	-0.18
222	SLE RA 13	-1000	5	5183	-7.17	-39.23	-0.17
222	SLE RA 14	-1029	6	5288	-7.77	-40.38	-0.19
222	SLE RA 15	-1022	6	5273	-7.52	-40.09	-0.18
222	SLE RA 16	-1020	6	5258	-7.72	-40.02	-0.18
222	SLE RA 17	-1013	6	5243	-7.46	-39.73	-0.18
222	SLE RA 18	-1072	6	5355	-7.74	-42.02	-0.19
222	SLE RA 19	-1065	6	5340	-7.48	-41.73	-0.18
222	SLE RA 20	-1080	6	5405	-7.86	-42.34	-0.19
222	SLE RA 21	-1073	6	5390	-7.6	-42.05	-0.18
222	SLE FR 1	-846	6	4700	-6.89	-33.25	-0.16
222	SLE FR 2	-844	5	4695	-6.81	-33.15	-0.16
222	SLE FR 3	-850	6	4720	-6.94	-33.38	-0.17
222	SLE FR 4	-912	6	4891	-7.06	-35.79	-0.17
222	SLE FR 5	-917	6	4916	-7.19	-36.01	-0.17
222	SLE FR 6	-959	6	5027	-7.31	-37.64	-0.17
222	SLE QP 1	-846	6	4700	-6.89	-33.25	-0.16
222	SLE QP 2	-914	6	4896	-7.15	-35.88	-0.17
222	SLD 1	-131	1	3898	-13.68	-4.71	-0.14
222	SLD 2	-131	1	3898	-13.68	-4.71	-0.14
222	SLD 3	-39	4	3836	-5.43	-1.04	-0.06
222	SLD 4	-39	4	3836	-5.43	-1.04	-0.06
222	SLD 5	-818	1	4691	-21.61	-32.09	-0.28
222	SLD 6	-818	1	4691	-21.61	-32.09	-0.28
222	SLD 7	-513	9	4484	5.87	-19.87	-0.02
222	SLD 8	-513	9	4484	5.87	-19.87	-0.02
222	SLD 9	-1315	3	5308	-20.16	-51.9	-0.32
222	SLD 10	-1315	3	5308	-20.16	-51.9	-0.32
222	SLD 11	-1011	11	5102	7.32	-39.67	-0.06
222	SLD 12	-1011	11	5102	7.32	-39.67	-0.06
222	SLD 13	-1789	8	5956	-8.86	-70.72	-0.28
222	SLD 14	-1789	8	5956	-8.86	-70.72	-0.28
222	SLD 15	-1697	10	5894	-0.62	-67.05	-0.2
222	SLD 16	-1697	10	5894	-0.62	-67.05	-0.2
222	SLV 1	912	-5	2565	-23.5	36.76	-0.1
222	SLV 2	912	-5	2565	-23.5	36.76	-0.1
222	SLV 3	1137	1	2410	-2.49	45.83	0.09
222	SLV 4	1137	1	2410	-2.49	45.83	0.09
222	SLV 5	-708	-6	4432	-43.92	-27.85	-0.44
222	SLV 6	-708	-6	4432	-43.92	-27.85	-0.44
222	SLV 7	43	13	3916	26.12	2.39	0.2
222	SLV 8	43	13	3916	26.12	2.39	0.2
222	SLV 9	-1871	-2	5877	-40.41	-74.16	-0.54
222	SLV 10	-1871	-2	5877	-40.41	-74.16	-0.54
222	SLV 11	-1120	18	5361	29.62	-43.92	0.1
222	SLV 12	-1120	18	5361	29.62	-43.92	0.1
222	SLV 13	-2965	11	7382	-11.8	-117.6	-0.43
222	SLV 14	-2965	11	7382	-11.8	-117.6	-0.43
222	SLV 15	-2740	16	7227	9.2	-108.53	-0.24
222	SLV 16	-2740	16	7227	9.2	-108.53	-0.24
223	SLU 1	-985	-2	5273	-2.58	-60.13	0.23
223	SLU 2	-969	-2	5219	-2.32	-59.09	0.22
223	SLU 3	-1015	-2	5423	-2.68	-62.04	0.24
223	SLU 4	-1005	-2	5390	-2.53	-61.42	0.23
223	SLU 5	-984	-2	5312	-2.39	-60.1	0.23
223	SLU 6	-1029	-2	5516	-2.76	-63.05	0.24
223	SLU 7	-1019	-2	5484	-2.6	-62.43	0.24
223	SLU 8	-1015	-2	5460	-2.73	-62.15	0.24
223	SLU 9	-1005	-2	5427	-2.57	-61.53	0.24
223	SLU 10	-1228	-3	6009	-2.65	-73.78	0.26
223	SLU 11	-1274	-2	6213	-3.01	-76.74	0.27

Nodo	Cont.	Reazione a traslazione			Reazione a rotazione		
Ind.	N.br.	x	y	z	x	y	z
223	SLU 12	-1264	-3	6180	-2.86	-76.11	0.27
223	SLU 13	-1243	-3	6102	-2.72	-74.79	0.26
223	SLU 14	-1289	-2	6306	-3.09	-77.75	0.27
223	SLU 15	-1279	-3	6273	-2.93	-77.12	0.27
223	SLU 16	-1274	-2	6250	-3.06	-76.84	0.27
223	SLU 17	-1264	-3	6217	-2.9	-76.22	0.27
223	SLU 18	-1356	-3	6402	-3.05	-81.12	0.27
223	SLU 19	-1346	-3	6369	-2.9	-80.49	0.27
223	SLU 20	-1371	-3	6495	-3.12	-82.13	0.28
223	SLU 21	-1361	-3	6462	-2.97	-81.51	0.28
223	SLU 22	-1206	-2	6001	-2.92	-72.85	0.26
223	SLU 23	-1189	-3	5946	-2.66	-71.81	0.26
223	SLU 24	-1235	-2	6151	-3.03	-74.76	0.27
223	SLU 25	-1225	-3	6118	-2.87	-74.14	0.27
223	SLU 26	-1204	-3	6040	-2.74	-72.82	0.26
223	SLU 27	-1250	-2	6244	-3.1	-75.78	0.27
223	SLU 28	-1240	-3	6211	-2.94	-75.15	0.27
223	SLU 29	-1235	-2	6187	-3.07	-74.87	0.27
223	SLU 30	-1225	-3	6155	-2.91	-74.25	0.27
223	SLU 31	-1449	-3	6736	-2.99	-86.5	0.29
223	SLU 32	-1494	-3	6941	-3.36	-89.46	0.3
223	SLU 33	-1484	-3	6908	-3.2	-88.84	0.3
223	SLU 34	-1463	-3	6829	-3.07	-87.52	0.29
223	SLU 35	-1509	-3	7034	-3.43	-90.47	0.3
223	SLU 36	-1499	-3	7001	-3.27	-89.85	0.3
223	SLU 37	-1495	-3	6977	-3.4	-89.56	0.3
223	SLU 38	-1485	-3	6944	-3.24	-88.94	0.3
223	SLU 39	-1576	-3	7129	-3.39	-93.84	0.3
223	SLU 40	-1566	-3	7097	-3.24	-93.22	0.3
223	SLU 41	-1591	-3	7222	-3.47	-94.85	0.31
223	SLU 42	-1581	-3	7190	-3.31	-94.23	0.31
223	SLU 43	-1205	-3	6606	-3.24	-73.8	0.28
223	SLU 44	-1189	-3	6551	-2.98	-72.76	0.28
223	SLU 45	-1235	-3	6756	-3.34	-75.72	0.29
223	SLU 46	-1225	-3	6723	-3.19	-75.09	0.29
223	SLU 47	-1204	-3	6644	-3.05	-73.77	0.29
223	SLU 48	-1249	-3	6849	-3.41	-76.73	0.3
223	SLU 49	-1239	-3	6816	-3.26	-76.11	0.3
223	SLU 50	-1235	-3	6792	-3.38	-75.82	0.3
223	SLU 51	-1225	-3	6759	-3.23	-75.2	0.29
223	SLU 52	-1448	-3	7341	-3.31	-87.46	0.31
223	SLU 53	-1494	-3	7545	-3.67	-90.41	0.32
223	SLU 54	-1484	-3	7513	-3.52	-89.79	0.32
223	SLU 55	-1463	-3	7434	-3.38	-88.47	0.32
223	SLU 56	-1509	-3	7639	-3.74	-91.42	0.33
223	SLU 57	-1499	-3	7606	-3.59	-90.8	0.33
223	SLU 58	-1494	-3	7582	-3.71	-90.52	0.33
223	SLU 59	-1485	-3	7549	-3.56	-89.9	0.33
223	SLU 60	-1576	-3	7734	-3.71	-94.79	0.33
223	SLU 61	-1566	-3	7701	-3.55	-94.17	0.33
223	SLU 62	-1591	-3	7827	-3.78	-95.8	0.33
223	SLU 63	-1581	-3	7795	-3.63	-95.18	0.33
223	SLU 64	-1426	-3	7333	-3.58	-86.52	0.32
223	SLU 65	-1409	-3	7279	-3.32	-85.49	0.31
223	SLU 66	-1455	-3	7483	-3.68	-88.44	0.32
223	SLU 67	-1445	-3	7450	-3.53	-87.82	0.32
223	SLU 68	-1424	-3	7372	-3.39	-86.5	0.32
223	SLU 69	-1470	-3	7576	-3.76	-89.45	0.33
223	SLU 70	-1460	-3	7544	-3.6	-88.83	0.33
223	SLU 71	-1455	-3	7520	-3.73	-88.55	0.33
223	SLU 72	-1445	-3	7487	-3.57	-87.92	0.33
223	SLU 73	-1669	-3	8069	-3.65	-100.18	0.34
223	SLU 74	-1714	-3	8273	-4.01	-103.13	0.36
223	SLU 75	-1705	-3	8240	-3.86	-102.51	0.35
223	SLU 76	-1683	-3	8162	-3.72	-101.19	0.35
223	SLU 77	-1729	-3	8366	-4.09	-104.15	0.36
223	SLU 78	-1719	-3	8334	-3.93	-103.52	0.36
223	SLU 79	-1715	-3	8310	-4.06	-103.24	0.36
223	SLU 80	-1705	-3	8277	-3.9	-102.62	0.36
223	SLU 81	-1796	-3	8462	-4.05	-107.52	0.36
223	SLU 82	-1786	-3	8429	-3.9	-106.89	0.36
223	SLU 83	-1811	-3	8555	-4.12	-108.53	0.37
223	SLU 84	-1801	-4	8522	-3.97	-107.9	0.36
223	SLE RA 1	-1048	-2	5481	-2.68	-63.76	0.24
223	SLE RA 2	-1037	-2	5445	-2.51	-63.07	0.23
223	SLE RA 3	-1068	-2	5581	-2.75	-65.04	0.24
223	SLE RA 4	-1061	-2	5559	-2.64	-64.62	0.24
223	SLE RA 5	-1047	-2	5507	-2.55	-63.74	0.24
223	SLE RA 6	-1078	-2	5643	-2.8	-65.71	0.25
223	SLE RA 7	-1071	-2	5621	-2.69	-65.3	0.24
223	SLE RA 8	-1068	-2	5605	-2.78	-65.11	0.24
223	SLE RA 9	-1061	-2	5584	-2.67	-64.69	0.24
223	SLE RA 10	-1210	-3	5971	-2.73	-72.86	0.25
223	SLE RA 11	-1241	-2	6108	-2.97	-74.83	0.26
223	SLE RA 12	-1234	-2	6086	-2.86	-74.42	0.26
223	SLE RA 13	-1220	-3	6034	-2.77	-73.54	0.26
223	SLE RA 14	-1251	-2	6170	-3.02	-75.51	0.27
223	SLE RA 15	-1244	-3	6148	-2.91	-75.09	0.27
223	SLE RA 16	-1241	-2	6132	-3	-74.9	0.26
223	SLE RA 17	-1234	-2	6110	-2.89	-74.49	0.26

Nodo	Cont.	Reazione a traslazione			Reazione a rotazione		
Ind.	N.br.	x	y	z	x	y	z
223	SLE RA 18	-1295	-2	6233	-2.99	-77.75	0.27
223	SLE RA 19	-1289	-3	6212	-2.89	-77.34	0.26
223	SLE RA 20	-1305	-2	6296	-3.04	-78.43	0.27
223	SLE RA 21	-1299	-3	6274	-2.94	-78.01	0.27
223	SLE FR 1	-1048	-2	5481	-2.68	-63.76	0.24
223	SLE FR 2	-1046	-2	5474	-2.64	-63.62	0.24
223	SLE FR 3	-1052	-2	5506	-2.7	-64.03	0.24
223	SLE FR 4	-1120	-2	5700	-2.74	-67.82	0.24
223	SLE FR 5	-1126	-2	5732	-2.79	-68.23	0.25
223	SLE FR 6	-1172	-2	5857	-2.84	-70.76	0.25
223	SLE QP 1	-1048	-2	5481	-2.68	-63.76	0.24
223	SLE QP 2	-1122	-2	5707	-2.77	-67.96	0.24
223	SLD 1	-389	2	4291	-5.68	-25.36	0.49
223	SLD 2	-389	2	4291	-5.68	-25.36	0.49
223	SLD 3	-304	-2	4176	-2.3	-20.38	0.14
223	SLD 4	-304	-2	4176	-2.3	-20.38	0.14
223	SLD 5	-1032	4	5458	-8.76	-62.73	0.85
223	SLD 6	-1032	4	5458	-8.76	-62.73	0.85
223	SLD 7	-747	-8	5072	2.49	-46.13	-0.32
223	SLD 8	-747	-8	5072	2.49	-46.13	-0.32
223	SLD 9	-1497	3	6342	-8.03	-89.78	0.81
223	SLD 10	-1497	3	6342	-8.03	-89.78	0.81
223	SLD 11	-1213	-9	5956	3.22	-73.19	-0.36
223	SLD 12	-1213	-9	5956	3.22	-73.19	-0.36
223	SLD 13	-1941	-2	7238	-3.25	-115.54	0.35
223	SLD 14	-1941	-2	7238	-3.25	-115.54	0.35
223	SLD 15	-1856	-6	7122	0.13	-110.56	0
223	SLD 16	-1856	-6	7122	0.13	-110.56	0
223	SLV 1	588	7	2404	-10.04	31.3	0.86
223	SLV 2	588	7	2404	-10.04	31.3	0.86
223	SLV 3	798	-2	2112	-1.46	43.71	-0.04
223	SLV 4	798	-2	2112	-1.46	43.71	-0.04
223	SLV 5	-929	15	5160	-17.96	-57	1.79
223	SLV 6	-929	15	5160	-17.96	-57	1.79
223	SLV 7	-227	-16	4184	10.62	-15.64	-1.2
223	SLV 8	-227	-16	4184	10.62	-15.64	-1.2
223	SLV 9	-2018	12	7229	-16.17	-120.28	1.69
223	SLV 10	-2018	12	7229	-16.17	-120.28	1.69
223	SLV 11	-1316	-19	6254	12.41	-78.92	-1.3
223	SLV 12	-1316	-19	6254	12.41	-78.92	-1.3
223	SLV 13	-3043	-3	9302	-4.08	-179.63	0.53
223	SLV 14	-3043	-3	9302	-4.08	-179.63	0.53
223	SLV 15	-2832	-12	9009	4.49	-167.22	-0.37
223	SLV 16	-2832	-12	9009	4.49	-167.22	-0.37
224	SLU 1	-1139	12	10125	-5.2	-40.85	-0.05
224	SLU 2	-1123	97	10007	-9.18	-40.2	-0.06
224	SLU 3	-1174	17	10428	-5.58	-42.1	-0.05
224	SLU 4	-1164	67	10357	-7.97	-41.71	-0.06
224	SLU 5	-1142	101	10194	-9.5	-40.87	-0.06
224	SLU 6	-1193	21	10616	-5.9	-42.77	-0.05
224	SLU 7	-1183	72	10545	-8.29	-42.38	-0.06
224	SLU 8	-1178	21	10501	-5.84	-42.2	-0.05
224	SLU 9	-1168	72	10429	-8.23	-41.81	-0.06
224	SLU 10	-1353	99	11519	-10.04	-49.45	-0.07
224	SLU 11	-1404	19	11941	-6.43	-51.35	-0.06
224	SLU 12	-1394	70	11870	-8.83	-50.96	-0.06
224	SLU 13	-1373	104	11707	-10.36	-50.12	-0.07
224	SLU 14	-1423	23	12129	-6.75	-52.02	-0.06
224	SLU 15	-1413	74	12057	-9.15	-51.63	-0.07
224	SLU 16	-1408	24	12013	-6.69	-51.44	-0.06
224	SLU 17	-1398	74	11942	-9.09	-51.06	-0.07
224	SLU 18	-1468	16	12286	-6.42	-54.06	-0.06
224	SLU 19	-1458	67	12215	-8.81	-53.67	-0.07
224	SLU 20	-1487	20	12474	-6.74	-54.74	-0.06
224	SLU 21	-1478	71	12402	-9.13	-54.35	-0.07
224	SLU 22	-1343	16	11534	-6.12	-48.89	-0.05
224	SLU 23	-1326	101	11415	-10.11	-48.25	-0.07
224	SLU 24	-1377	21	11837	-6.5	-50.14	-0.06
224	SLU 25	-1367	71	11766	-8.89	-49.75	-0.06
224	SLU 26	-1346	105	11603	-10.43	-48.92	-0.07
224	SLU 27	-1396	25	12025	-6.82	-50.81	-0.06
224	SLU 28	-1386	76	11953	-9.22	-50.42	-0.07
224	SLU 29	-1381	25	11909	-6.76	-50.24	-0.06
224	SLU 30	-1372	76	11838	-9.15	-49.85	-0.07
224	SLU 31	-1556	104	12927	-10.96	-57.49	-0.08
224	SLU 32	-1607	23	13349	-7.36	-59.39	-0.06
224	SLU 33	-1597	74	13278	-9.75	-59	-0.07
224	SLU 34	-1576	108	13115	-11.29	-58.17	-0.08
224	SLU 35	-1626	28	13537	-7.68	-60.06	-0.07
224	SLU 36	-1617	78	13466	-10.07	-59.67	-0.07
224	SLU 37	-1611	28	13422	-7.62	-59.49	-0.07
224	SLU 38	-1602	78	13350	-10.01	-59.1	-0.07
224	SLU 39	-1671	20	13694	-7.34	-62.11	-0.07
224	SLU 40	-1662	71	13623	-9.74	-61.72	-0.07
224	SLU 41	-1691	24	13882	-7.66	-62.78	-0.07
224	SLU 42	-1681	75	13811	-10.06	-62.39	-0.08
224	SLU 43	-1411	15	12680	-6.44	-50.35	-0.06
224	SLU 44	-1395	99	12561	-10.43	-49.7	-0.07
224	SLU 45	-1446	19	12983	-6.82	-51.59	-0.06
224	SLU 46	-1436	70	12912	-9.21	-51.2	-0.07

Nodo	Cont.	Reazione a traslazione			Reazione a rotazione		
Ind.	N.br.	x	y	z	x	y	z
224	SLU 47	-1415	104	12749	-10.75	-50.37	-0.07
224	SLU 48	-1465	23	13171	-7.14	-52.27	-0.06
224	SLU 49	-1455	74	13100	-9.53	-51.88	-0.07
224	SLU 50	-1450	23	13055	-7.08	-51.69	-0.06
224	SLU 51	-1440	74	12984	-9.47	-51.3	-0.07
224	SLU 52	-1625	102	14074	-11.28	-58.95	-0.08
224	SLU 53	-1676	21	14496	-7.68	-60.84	-0.07
224	SLU 54	-1666	72	14424	-10.07	-60.45	-0.08
224	SLU 55	-1645	106	14261	-11.6	-59.62	-0.08
224	SLU 56	-1695	26	14683	-8	-61.52	-0.07
224	SLU 57	-1685	76	14612	-10.39	-61.13	-0.08
224	SLU 58	-1680	26	14568	-7.94	-60.94	-0.07
224	SLU 59	-1671	77	14497	-10.33	-60.55	-0.08
224	SLU 60	-1740	18	14841	-7.66	-63.56	-0.07
224	SLU 61	-1730	69	14769	-10.05	-63.17	-0.08
224	SLU 62	-1760	23	15028	-7.98	-64.23	-0.07
224	SLU 63	-1750	73	14957	-10.38	-63.84	-0.08
224	SLU 64	-1615	19	14088	-7.36	-58.39	-0.07
224	SLU 65	-1598	103	13970	-11.35	-57.74	-0.08
224	SLU 66	-1649	23	14392	-7.74	-59.64	-0.07
224	SLU 67	-1639	74	14320	-10.14	-59.25	-0.08
224	SLU 68	-1618	108	14157	-11.67	-58.42	-0.08
224	SLU 69	-1668	27	14579	-8.06	-60.31	-0.07
224	SLU 70	-1658	78	14508	-10.46	-59.92	-0.08
224	SLU 71	-1653	27	14464	-8	-59.74	-0.07
224	SLU 72	-1644	78	14393	-10.4	-59.35	-0.08
224	SLU 73	-1828	106	15482	-12.21	-66.99	-0.09
224	SLU 74	-1879	25	15904	-8.6	-68.89	-0.08
224	SLU 75	-1869	76	15833	-10.99	-68.5	-0.08
224	SLU 76	-1848	110	15670	-12.53	-67.66	-0.09
224	SLU 77	-1898	30	16092	-8.92	-69.56	-0.08
224	SLU 78	-1889	81	16021	-11.31	-69.17	-0.09
224	SLU 79	-1884	30	15976	-8.86	-68.99	-0.08
224	SLU 80	-1874	81	15905	-11.25	-68.6	-0.09
224	SLU 81	-1943	22	16249	-8.59	-71.6	-0.08
224	SLU 82	-1934	73	16178	-10.98	-71.22	-0.08
224	SLU 83	-1963	27	16437	-8.91	-72.28	-0.08
224	SLU 84	-1953	77	16366	-11.3	-71.89	-0.09
224	SLE RA 1	-1197	14	10528	-5.46	-43.15	-0.05
224	SLE RA 2	-1187	70	10449	-8.12	-42.72	-0.06
224	SLE RA 3	-1220	16	10730	-5.71	-43.98	-0.05
224	SLE RA 4	-1214	50	10682	-7.31	-43.72	-0.06
224	SLE RA 5	-1199	73	10574	-8.33	-43.16	-0.06
224	SLE RA 6	-1233	19	10855	-5.93	-44.43	-0.05
224	SLE RA 7	-1227	53	10807	-7.52	-44.17	-0.06
224	SLE RA 8	-1223	19	10778	-5.89	-44.05	-0.05
224	SLE RA 9	-1217	53	10730	-7.48	-43.79	-0.06
224	SLE RA 10	-1340	72	11457	-8.69	-48.88	-0.06
224	SLE RA 11	-1374	18	11738	-6.29	-50.15	-0.06
224	SLE RA 12	-1367	52	11691	-7.88	-49.89	-0.06
224	SLE RA 13	-1353	74	11582	-8.9	-49.33	-0.06
224	SLE RA 14	-1387	21	11863	-6.5	-50.59	-0.06
224	SLE RA 15	-1380	55	11816	-8.09	-50.33	-0.06
224	SLE RA 16	-1377	21	11786	-6.46	-50.21	-0.06
224	SLE RA 17	-1370	55	11739	-8.05	-49.95	-0.06
224	SLE RA 18	-1417	16	11968	-6.28	-51.96	-0.06
224	SLE RA 19	-1410	50	11921	-7.87	-51.7	-0.06
224	SLE RA 20	-1429	19	12093	-6.49	-52.41	-0.06
224	SLE RA 21	-1423	53	12046	-8.08	-52.15	-0.06
224	SLE FR 1	-1197	14	10528	-5.46	-43.15	-0.05
224	SLE FR 2	-1195	25	10512	-5.99	-43.06	-0.05
224	SLE FR 3	-1203	15	10578	-5.55	-43.33	-0.05
224	SLE FR 4	-1261	26	10944	-6.24	-45.7	-0.05
224	SLE FR 5	-1268	15	11010	-5.79	-45.97	-0.05
224	SLE FR 6	-1307	15	11248	-5.87	-47.55	-0.05
224	SLE QP 1	-1197	14	10528	-5.46	-43.15	-0.05
224	SLE QP 2	-1263	14	10960	-5.71	-45.79	-0.05
224	SLD 1	-687	154	7862	-11.98	-20.18	-0.08
224	SLD 2	-687	154	7862	-11.98	-20.18	-0.08
224	SLD 3	-624	-237	7557	7.05	-17.19	0.02
224	SLD 4	-624	-237	7557	7.05	-17.19	0.02
224	SLD 5	-1186	648	10493	-36.44	-42.64	-0.2
224	SLD 6	-1186	648	10493	-36.44	-42.64	-0.2
224	SLD 7	-976	-653	9477	26.97	-32.68	0.11
224	SLD 8	-976	-653	9477	26.97	-32.68	0.11
224	SLD 9	-1551	682	12443	-38.38	-58.9	-0.21
224	SLD 10	-1551	682	12443	-38.38	-58.9	-0.21
224	SLD 11	-1340	-620	11427	25.03	-48.94	0.1
224	SLD 12	-1340	-620	11427	25.03	-48.94	0.1
224	SLD 13	-1902	265	14362	-18.46	-74.39	-0.12
224	SLD 14	-1902	265	14362	-18.46	-74.39	-0.12
224	SLD 15	-1839	-125	14057	0.57	-71.41	-0.03
224	SLD 16	-1839	-125	14057	0.57	-71.41	-0.03
224	SLV 1	79	337	3740	-20.24	13.88	-0.11
224	SLV 2	79	337	3740	-20.24	13.88	-0.11
224	SLV 3	237	-575	2966	24.16	21.36	0.11
224	SLV 4	237	-575	2966	24.16	21.36	0.11
224	SLV 5	-1101	1493	9967	-77.4	-39.23	-0.41
224	SLV 6	-1101	1493	9967	-77.4	-39.23	-0.41
224	SLV 7	-572	-1544	7389	70.59	-14.31	0.33

Nodo	Cont.	Reazione a traslazione			Reazione a rotazione		
Ind.	N.br.	x	y	z	x	y	z
224	SLV 8	-572	-1544	7389	70.59	-14.31	0.33
224	SLV 9	-1954	1573	14531	-82	-77.28	-0.44
224	SLV 10	-1954	1573	14531	-82	-77.28	-0.44
224	SLV 11	-1425	-1464	11953	65.99	-52.36	0.3
224	SLV 12	-1425	-1464	11953	65.99	-52.36	0.3
224	SLV 13	-2764	603	18954	-35.57	-112.94	-0.21
224	SLV 14	-2764	603	18954	-35.57	-112.94	-0.21
224	SLV 15	-2605	-308	18180	8.83	-105.47	0.01
224	SLV 16	-2605	-308	18180	8.83	-105.47	0.01
225	SLU 1	-6	-407	7265	16.48	4.22	0.04
225	SLU 2	-5	-293	7161	12.55	4.52	0.04
225	SLU 3	-6	-424	7507	17.2	4.46	0.04
225	SLU 4	-6	-356	7445	14.84	4.63	0.04
225	SLU 5	-5	-305	7330	13.08	4.71	0.04
225	SLU 6	-6	-436	7676	17.73	4.65	0.04
225	SLU 7	-5	-368	7614	15.37	4.82	0.04
225	SLU 8	-6	-431	7602	17.54	4.61	0.04
225	SLU 9	-5	-363	7540	15.18	4.78	0.04
225	SLU 10	-5	-373	8117	15.39	5.36	0.05
225	SLU 11	-6	-505	8463	20.04	5.3	0.05
225	SLU 12	-6	-436	8401	17.68	5.48	0.05
225	SLU 13	-5	-385	8286	15.92	5.55	0.05
225	SLU 14	-6	-517	8632	20.57	5.49	0.05
225	SLU 15	-6	-448	8570	18.21	5.67	0.05
225	SLU 16	-6	-512	8558	20.38	5.45	0.05
225	SLU 17	-5	-443	8496	18.02	5.63	0.05
225	SLU 18	-6	-522	8630	20.54	5.43	0.05
225	SLU 19	-5	-454	8568	18.18	5.61	0.05
225	SLU 20	-6	-534	8799	21.06	5.62	0.05
225	SLU 21	-5	-466	8737	18.7	5.8	0.05
225	SLU 22	-6	-482	8194	19.22	5.01	0.05
225	SLU 23	-5	-368	8091	15.28	5.31	0.05
225	SLU 24	-6	-499	8436	19.94	5.25	0.05
225	SLU 25	-6	-431	8374	17.58	5.42	0.05
225	SLU 26	-5	-380	8259	15.81	5.5	0.05
225	SLU 27	-6	-511	8605	20.47	5.44	0.05
225	SLU 28	-6	-443	8543	18.11	5.61	0.05
225	SLU 29	-6	-506	8532	20.27	5.4	0.05
225	SLU 30	-6	-438	8470	17.91	5.57	0.05
225	SLU 31	-5	-448	9047	18.12	6.15	0.06
225	SLU 32	-6	-580	9392	22.78	6.09	0.06
225	SLU 33	-6	-511	9330	20.42	6.27	0.06
225	SLU 34	-5	-460	9215	18.65	6.34	0.06
225	SLU 35	-6	-592	9561	23.31	6.28	0.06
225	SLU 36	-6	-523	9499	20.95	6.46	0.06
225	SLU 37	-6	-587	9487	23.11	6.24	0.06
225	SLU 38	-6	-518	9425	20.75	6.42	0.06
225	SLU 39	-6	-597	9560	23.27	6.22	0.06
225	SLU 40	-6	-529	9498	20.91	6.4	0.06
225	SLU 41	-6	-609	9728	23.8	6.41	0.06
225	SLU 42	-6	-541	9666	21.44	6.59	0.06
225	SLU 43	-8	-503	9126	20.49	5.22	0.05
225	SLU 44	-7	-389	9022	16.55	5.52	0.05
225	SLU 45	-8	-521	9368	21.21	5.45	0.05
225	SLU 46	-7	-452	9306	18.85	5.63	0.05
225	SLU 47	-7	-401	9191	17.08	5.71	0.05
225	SLU 48	-8	-533	9536	21.74	5.64	0.05
225	SLU 49	-7	-464	9475	19.38	5.82	0.05
225	SLU 50	-7	-527	9463	21.54	5.6	0.05
225	SLU 51	-7	-459	9401	19.18	5.78	0.05
225	SLU 52	-7	-470	9978	19.39	6.36	0.06
225	SLU 53	-8	-601	10324	24.05	6.29	0.06
225	SLU 54	-7	-533	10262	21.69	6.47	0.06
225	SLU 55	-7	-482	10147	19.92	6.55	0.06
225	SLU 56	-8	-613	10492	24.58	6.49	0.06
225	SLU 57	-7	-545	10430	22.22	6.66	0.06
225	SLU 58	-8	-608	10419	24.38	6.44	0.06
225	SLU 59	-7	-540	10357	22.02	6.62	0.06
225	SLU 60	-8	-619	10491	24.54	6.43	0.06
225	SLU 61	-7	-550	10429	22.18	6.6	0.06
225	SLU 62	-8	-631	10660	25.07	6.62	0.06
225	SLU 63	-7	-562	10598	22.71	6.79	0.06
225	SLU 64	-8	-578	10055	23.22	6.01	0.06
225	SLU 65	-7	-464	9951	19.29	6.31	0.06
225	SLU 66	-8	-596	10297	23.95	6.24	0.06
225	SLU 67	-7	-527	10235	21.59	6.42	0.06
225	SLU 68	-7	-476	10120	19.82	6.5	0.06
225	SLU 69	-8	-608	10466	24.47	6.43	0.06
225	SLU 70	-7	-539	10404	22.11	6.61	0.06
225	SLU 71	-8	-602	10392	24.28	6.39	0.06
225	SLU 72	-7	-534	10330	21.92	6.57	0.06
225	SLU 73	-7	-545	10907	22.13	7.15	0.07
225	SLU 74	-8	-676	11253	26.78	7.08	0.07
225	SLU 75	-7	-608	11191	24.43	7.26	0.07
225	SLU 76	-7	-557	11076	22.66	7.34	0.07
225	SLU 77	-8	-688	11422	27.31	7.27	0.07
225	SLU 78	-7	-620	11360	24.95	7.45	0.07
225	SLU 79	-8	-683	11348	27.12	7.23	0.07
225	SLU 80	-7	-615	11286	24.76	7.41	0.07
225	SLU 81	-8	-694	11420	27.28	7.21	0.07

Nodo	Cont.	Reazione a traslazione			Reazione a rotazione		
Ind.	N.br.	x	y	z	x	y	z
225	SLU 82	-7	-625	11358	24.92	7.39	0.07
225	SLU 83	-8	-706	11589	27.81	7.41	0.07
225	SLU 84	-7	-637	11527	25.45	7.58	0.07
225	SLE RA 1	-6	-428	7530	17.26	4.45	0.04
225	SLE RA 2	-5	-352	7461	14.64	4.65	0.04
225	SLE RA 3	-6	-440	7692	17.74	4.6	0.04
225	SLE RA 4	-6	-394	7650	16.17	4.72	0.04
225	SLE RA 5	-5	-360	7574	14.99	4.77	0.04
225	SLE RA 6	-6	-448	7804	18.1	4.73	0.04
225	SLE RA 7	-6	-402	7763	16.52	4.85	0.04
225	SLE RA 8	-6	-444	7755	17.97	4.7	0.04
225	SLE RA 9	-6	-399	7714	16.39	4.82	0.04
225	SLE RA 10	-5	-406	8099	16.53	5.21	0.05
225	SLE RA 11	-6	-494	8329	19.64	5.17	0.05
225	SLE RA 12	-6	-448	8288	18.06	5.28	0.05
225	SLE RA 13	-5	-414	8211	16.89	5.34	0.05
225	SLE RA 14	-6	-502	8441	19.99	5.29	0.05
225	SLE RA 15	-6	-456	8400	18.42	5.41	0.05
225	SLE RA 16	-6	-498	8393	19.86	5.27	0.05
225	SLE RA 17	-6	-453	8351	18.29	5.38	0.05
225	SLE RA 18	-6	-505	8441	19.97	5.25	0.05
225	SLE RA 19	-6	-460	8399	18.39	5.37	0.05
225	SLE RA 20	-6	-513	8553	20.32	5.38	0.05
225	SLE RA 21	-6	-468	8512	18.75	5.5	0.05
225	SLE FR 1	-6	-428	7530	17.26	4.45	0.04
225	SLE FR 2	-6	-413	7516	16.74	4.49	0.04
225	SLE FR 3	-6	-432	7575	17.4	4.5	0.04
225	SLE FR 4	-6	-436	7790	17.55	4.73	0.04
225	SLE FR 5	-6	-455	7848	18.21	4.74	0.04
225	SLE FR 6	-6	-467	7985	18.61	4.85	0.05
225	SLE QP 1	-6	-428	7530	17.26	4.45	0.04
225	SLE QP 2	-6	-451	7803	18.07	4.69	0.04
225	SLD 1	3	-466	9800	18.11	6.24	0.08
225	SLD 2	3	-466	9800	18.11	6.24	0.08
225	SLD 3	9	-844	9645	31.28	8.92	0.07
225	SLD 4	9	-844	9645	31.28	8.92	0.07
225	SLD 5	-13	118	8638	-1.89	1.09	0.07
225	SLD 6	-13	118	8638	-1.89	1.09	0.07
225	SLD 7	8	-1143	8121	42	10.03	0.04
225	SLD 8	8	-1143	8121	42	10.03	0.04
225	SLD 9	-20	240	7486	-5.86	-0.65	0.05
225	SLD 10	-20	240	7486	-5.86	-0.65	0.05
225	SLD 11	1	-1021	6969	38.03	8.3	0.02
225	SLD 12	1	-1021	6969	38.03	8.3	0.02
225	SLD 13	-21	-59	5962	4.87	0.46	0.02
225	SLD 14	-21	-59	5962	4.87	0.46	0.02
225	SLD 15	-14	-437	5806	18.04	3.14	0.01
225	SLD 16	-14	-437	5806	18.04	3.14	0.01
225	SLV 1	13	-488	12494	18.24	8.14	0.13
225	SLV 2	13	-488	12494	18.24	8.14	0.13
225	SLV 3	30	-1370	12099	48.98	14.87	0.11
225	SLV 4	30	-1370	12099	48.98	14.87	0.11
225	SLV 5	-25	875	9810	-28.49	-4.49	0.11
225	SLV 6	-25	875	9810	-28.49	-4.49	0.11
225	SLV 7	30	-2065	8492	73.96	17.96	0.03
225	SLV 8	30	-2065	8492	73.96	17.96	0.03
225	SLV 9	-41	1162	7115	-37.82	-8.58	0.06
225	SLV 10	-41	1162	7115	-37.82	-8.58	0.06
225	SLV 11	13	-1778	5796	64.64	13.87	-0.02
225	SLV 12	13	-1778	5796	64.64	13.87	-0.02
225	SLV 13	-41	467	3508	-12.83	-5.49	-0.02
225	SLV 14	-41	467	3508	-12.83	-5.49	-0.02
225	SLV 15	-25	-415	3112	17.91	1.24	-0.05
225	SLV 16	-25	-415	3112	17.91	1.24	-0.05
226	SLU 1	-5	-235	6588	13.79	-1.24	-0.03
226	SLU 2	-5	-145	6504	9.36	-1.63	-0.03
226	SLU 3	-5	-240	6790	14.16	-1.27	-0.03
226	SLU 4	-5	-186	6740	11.51	-1.5	-0.03
226	SLU 5	-5	-145	6633	9.51	-1.63	-0.03
226	SLU 6	-5	-240	6920	14.3	-1.28	-0.03
226	SLU 7	-5	-186	6869	11.65	-1.51	-0.03
226	SLU 8	-5	-236	6847	14.07	-1.26	-0.03
226	SLU 9	-5	-181	6797	11.42	-1.48	-0.03
226	SLU 10	-6	-206	7417	12.39	-2.09	-0.04
226	SLU 11	-6	-301	7703	17.18	-1.74	-0.04
226	SLU 12	-6	-246	7653	14.53	-1.97	-0.04
226	SLU 13	-6	-206	7547	12.53	-2.1	-0.04
226	SLU 14	-6	-301	7833	17.33	-1.74	-0.04
226	SLU 15	-6	-247	7782	14.67	-1.97	-0.04
226	SLU 16	-6	-296	7760	17.09	-1.72	-0.04
226	SLU 17	-6	-242	7710	14.44	-1.95	-0.04
226	SLU 18	-6	-322	7892	18.1	-1.91	-0.04
226	SLU 19	-7	-268	7842	15.45	-2.14	-0.04
226	SLU 20	-6	-322	8022	18.24	-1.91	-0.04
226	SLU 21	-7	-268	7971	15.59	-2.14	-0.04
226	SLU 22	-6	-287	7453	16.47	-1.62	-0.04
226	SLU 23	-6	-197	7369	12.05	-2	-0.04
226	SLU 24	-6	-291	7656	16.85	-1.65	-0.04
226	SLU 25	-6	-237	7605	14.2	-1.88	-0.04
226	SLU 26	-6	-197	7499	12.2	-2.01	-0.04

Nodo	Cont.	Reazione a traslazione			Reazione a rotazione		
Ind.	N.br.	x	y	z	x	y	z
226	SLU 27	-6	-292	7786	16.99	-1.65	-0.04
226	SLU 28	-6	-237	7735	14.34	-1.88	-0.04
226	SLU 29	-6	-287	7713	16.76	-1.63	-0.04
226	SLU 30	-6	-233	7663	14.11	-1.86	-0.04
226	SLU 31	-7	-257	8282	15.08	-2.46	-0.04
226	SLU 32	-7	-352	8569	19.87	-2.11	-0.04
226	SLU 33	-7	-298	8518	17.22	-2.34	-0.04
226	SLU 34	-7	-258	8412	15.22	-2.47	-0.04
226	SLU 35	-7	-352	8699	20.01	-2.12	-0.05
226	SLU 36	-7	-298	8648	17.36	-2.35	-0.04
226	SLU 37	-7	-348	8626	19.78	-2.09	-0.04
226	SLU 38	-7	-294	8576	17.13	-2.32	-0.04
226	SLU 39	-7	-374	8758	20.79	-2.28	-0.05
226	SLU 40	-8	-320	8707	18.14	-2.51	-0.05
226	SLU 41	-7	-374	8888	20.93	-2.29	-0.05
226	SLU 42	-8	-320	8837	18.28	-2.52	-0.05
226	SLU 43	-6	-288	8267	17	-1.49	-0.04
226	SLU 44	-6	-198	8183	12.58	-1.87	-0.04
226	SLU 45	-6	-293	8469	17.37	-1.52	-0.04
226	SLU 46	-6	-238	8419	14.72	-1.75	-0.04
226	SLU 47	-6	-198	8313	12.72	-1.88	-0.04
226	SLU 48	-6	-293	8599	17.52	-1.52	-0.04
226	SLU 49	-6	-239	8549	14.86	-1.75	-0.04
226	SLU 50	-6	-288	8527	17.28	-1.5	-0.04
226	SLU 51	-6	-234	8476	14.63	-1.73	-0.04
226	SLU 52	-7	-259	9096	15.6	-2.33	-0.04
226	SLU 53	-7	-353	9383	20.4	-1.98	-0.05
226	SLU 54	-7	-299	9332	17.74	-2.21	-0.05
226	SLU 55	-7	-259	9226	15.74	-2.34	-0.05
226	SLU 56	-7	-354	9512	20.54	-1.99	-0.05
226	SLU 57	-7	-299	9462	17.89	-2.22	-0.05
226	SLU 58	-7	-349	9440	20.31	-1.96	-0.05
226	SLU 59	-7	-295	9390	17.65	-2.19	-0.05
226	SLU 60	-7	-375	9571	21.32	-2.15	-0.05
226	SLU 61	-8	-321	9521	18.66	-2.38	-0.05
226	SLU 62	-7	-375	9701	21.46	-2.16	-0.05
226	SLU 63	-8	-321	9651	18.81	-2.39	-0.05
226	SLU 64	-7	-340	9133	19.69	-1.86	-0.04
226	SLU 65	-7	-249	9049	15.27	-2.25	-0.04
226	SLU 66	-7	-344	9335	20.06	-1.89	-0.05
226	SLU 67	-7	-290	9285	17.41	-2.12	-0.05
226	SLU 68	-7	-250	9179	15.41	-2.25	-0.04
226	SLU 69	-7	-344	9465	20.21	-1.9	-0.05
226	SLU 70	-7	-290	9415	17.55	-2.13	-0.05
226	SLU 71	-7	-340	9393	19.97	-1.88	-0.05
226	SLU 72	-7	-286	9342	17.32	-2.1	-0.05
226	SLU 73	-8	-310	9962	18.29	-2.71	-0.05
226	SLU 74	-8	-405	10248	23.09	-2.36	-0.05
226	SLU 75	-8	-351	10198	20.43	-2.59	-0.05
226	SLU 76	-8	-310	10092	18.43	-2.71	-0.05
226	SLU 77	-8	-405	10378	23.23	-2.36	-0.05
226	SLU 78	-8	-351	10328	20.58	-2.59	-0.05
226	SLU 79	-8	-401	10306	23	-2.34	-0.05
226	SLU 80	-8	-347	10255	20.34	-2.57	-0.05
226	SLU 81	-8	-427	10437	24.01	-2.53	-0.05
226	SLU 82	-9	-372	10387	21.35	-2.76	-0.05
226	SLU 83	-8	-427	10567	24.15	-2.53	-0.05
226	SLU 84	-9	-373	10517	21.5	-2.76	-0.05
226	SLE RA 1	-5	-250	6835	14.55	-1.35	-0.03
226	SLE RA 2	-5	-190	6779	11.61	-1.61	-0.03
226	SLE RA 3	-5	-253	6970	14.8	-1.37	-0.03
226	SLE RA 4	-5	-217	6936	13.04	-1.52	-0.03
226	SLE RA 5	-5	-190	6866	11.7	-1.61	-0.03
226	SLE RA 6	-5	-253	7057	14.9	-1.38	-0.03
226	SLE RA 7	-5	-217	7023	13.13	-1.53	-0.03
226	SLE RA 8	-5	-250	7008	14.74	-1.36	-0.03
226	SLE RA 9	-5	-214	6975	12.98	-1.51	-0.03
226	SLE RA 10	-6	-230	7388	13.62	-1.92	-0.04
226	SLE RA 11	-6	-294	7579	16.82	-1.68	-0.04
226	SLE RA 12	-6	-257	7545	15.05	-1.83	-0.04
226	SLE RA 13	-6	-230	7474	13.72	-1.92	-0.04
226	SLE RA 14	-6	-294	7665	16.91	-1.68	-0.04
226	SLE RA 15	-6	-258	7632	15.15	-1.84	-0.04
226	SLE RA 16	-6	-291	7617	16.76	-1.67	-0.04
226	SLE RA 17	-6	-255	7583	14.99	-1.82	-0.04
226	SLE RA 18	-6	-308	7705	17.43	-1.79	-0.04
226	SLE RA 19	-6	-272	7671	15.66	-1.95	-0.04
226	SLE RA 20	-6	-308	7791	17.53	-1.8	-0.04
226	SLE RA 21	-6	-272	7758	15.76	-1.95	-0.04
226	SLE FR 1	-5	-250	6835	14.55	-1.35	-0.03
226	SLE FR 2	-5	-238	6824	13.96	-1.4	-0.03
226	SLE FR 3	-5	-250	6870	14.59	-1.35	-0.03
226	SLE FR 4	-5	-255	7085	14.83	-1.54	-0.04
226	SLE FR 5	-5	-267	7131	15.46	-1.49	-0.04
226	SLE FR 6	-5	-279	7270	15.99	-1.57	-0.04
226	SLE QP 1	-5	-250	6835	14.55	-1.35	-0.03
226	SLE QP 2	-5	-267	7096	15.42	-1.48	-0.04
226	SLD 1	5	86	5254	-1.38	2.44	-0.02
226	SLD 2	5	86	5254	-1.38	2.44	-0.02
226	SLD 3	-2	-309	5107	17.64	-0.34	-0.01

Nodo	Cont.	Reazione a traslazione			Reazione a rotazione		
Ind.	N.br.	x	y	z	x	y	z
226	SLD 4	-2	-309	5107	17.64	-0.34	-0.01
226	SLD 5	9	438	6767	-18.47	3.91	-0.05
226	SLD 6	9	438	6767	-18.47	3.91	-0.05
226	SLD 7	-15	-879	6276	44.93	-5.36	-0.01
226	SLD 8	-15	-879	6276	44.93	-5.36	-0.01
226	SLD 9	4	344	7916	-14.09	2.39	-0.06
226	SLD 10	4	344	7916	-14.09	2.39	-0.06
226	SLD 11	-19	-973	7425	49.3	-6.88	-0.03
226	SLD 12	-19	-973	7425	49.3	-6.88	-0.03
226	SLD 13	-9	-226	9085	13.19	-2.63	-0.06
226	SLD 14	-9	-226	9085	13.19	-2.63	-0.06
226	SLD 15	-16	-621	8938	32.21	-5.41	-0.05
226	SLD 16	-16	-621	8938	32.21	-5.41	-0.05
226	SLV 1	21	561	2800	-23.9	8.11	0.01
226	SLV 2	21	561	2800	-23.9	8.11	0.01
226	SLV 3	3	-361	2425	20.49	1.06	0.03
226	SLV 4	3	-361	2425	20.49	1.06	0.03
226	SLV 5	30	1379	6375	-63.71	12.08	-0.06
226	SLV 6	30	1379	6375	-63.71	12.08	-0.06
226	SLV 7	-30	-1694	5127	84.27	-11.41	0.02
226	SLV 8	-30	-1694	5127	84.27	-11.41	0.02
226	SLV 9	19	1159	9065	-53.43	8.44	-0.09
226	SLV 10	19	1159	9065	-53.43	8.44	-0.09
226	SLV 11	-40	-1914	7817	94.54	-15.05	-0.01
226	SLV 12	-40	-1914	7817	94.54	-15.05	-0.01
226	SLV 13	-13	-173	11767	10.35	-4.03	-0.1
226	SLV 14	-13	-173	11767	10.35	-4.03	-0.1
226	SLV 15	-31	-1095	11392	54.74	-11.07	-0.08
226	SLV 16	-31	-1095	11392	54.74	-11.07	-0.08
227	SLU 1	-5	-356	6887	5.02	8.29	-0.07
227	SLU 2	-4	-245	6787	1.4	8.79	-0.06
227	SLU 3	-5	-370	7112	5.17	8.68	-0.07
227	SLU 4	-4	-303	7053	3	8.98	-0.07
227	SLU 5	-4	-254	6945	1.46	9.09	-0.07
227	SLU 6	-5	-379	7270	5.23	8.98	-0.07
227	SLU 7	-4	-312	7210	3.06	9.28	-0.07
227	SLU 8	-5	-374	7202	5.14	8.9	-0.07
227	SLU 9	-4	-307	7142	2.97	9.2	-0.07
227	SLU 10	-4	-317	7647	2.82	10.05	-0.07
227	SLU 11	-5	-443	7971	6.59	9.94	-0.08
227	SLU 12	-5	-375	7912	4.42	10.24	-0.08
227	SLU 13	-4	-326	7804	2.88	10.36	-0.07
227	SLU 14	-5	-452	8129	6.65	10.25	-0.08
227	SLU 15	-5	-384	8069	4.48	10.55	-0.08
227	SLU 16	-5	-447	8061	6.55	10.17	-0.08
227	SLU 17	-4	-379	8001	4.38	10.47	-0.08
227	SLU 18	-5	-460	8114	7.04	10.1	-0.08
227	SLU 19	-5	-392	8055	4.87	10.4	-0.08
227	SLU 20	-5	-469	8272	7.1	10.4	-0.08
227	SLU 21	-5	-401	8212	4.93	10.7	-0.08
227	SLU 22	-5	-423	7731	6.24	9.54	-0.08
227	SLU 23	-4	-311	7631	2.62	10.04	-0.07
227	SLU 24	-5	-437	7956	6.39	9.93	-0.08
227	SLU 25	-5	-370	7896	4.22	10.23	-0.08
227	SLU 26	-4	-320	7789	2.68	10.34	-0.07
227	SLU 27	-5	-446	8114	6.45	10.24	-0.08
227	SLU 28	-5	-379	8054	4.28	10.53	-0.08
227	SLU 29	-5	-441	8046	6.36	10.15	-0.08
227	SLU 30	-4	-374	7986	4.19	10.45	-0.08
227	SLU 31	-5	-383	8490	4.04	11.3	-0.08
227	SLU 32	-5	-509	8815	7.81	11.19	-0.09
227	SLU 33	-5	-442	8756	5.64	11.49	-0.09
227	SLU 34	-5	-392	8648	4.1	11.61	-0.08
227	SLU 35	-5	-518	8973	7.87	11.5	-0.09
227	SLU 36	-5	-451	8913	5.7	11.8	-0.09
227	SLU 37	-5	-513	8905	7.77	11.42	-0.09
227	SLU 38	-5	-446	8845	5.6	11.72	-0.09
227	SLU 39	-6	-526	8958	8.26	11.35	-0.09
227	SLU 40	-5	-459	8899	6.09	11.65	-0.09
227	SLU 41	-6	-535	9116	8.32	11.66	-0.09
227	SLU 42	-5	-468	9056	6.15	11.95	-0.09
227	SLU 43	-6	-441	8663	6.11	10.34	-0.09
227	SLU 44	-5	-329	8564	2.49	10.84	-0.08
227	SLU 45	-6	-454	8889	6.26	10.73	-0.09
227	SLU 46	-5	-387	8829	4.09	11.03	-0.09
227	SLU 47	-5	-338	8722	2.55	11.15	-0.08
227	SLU 48	-6	-463	9046	6.32	11.04	-0.09
227	SLU 49	-5	-396	8987	4.15	11.34	-0.09
227	SLU 50	-6	-458	8979	6.23	10.96	-0.09
227	SLU 51	-5	-391	8919	4.06	11.26	-0.09
227	SLU 52	-5	-401	9423	3.9	12.11	-0.09
227	SLU 53	-6	-527	9748	7.67	12	-0.1
227	SLU 54	-6	-460	9688	5.5	12.3	-0.09
227	SLU 55	-5	-410	9581	3.97	12.42	-0.09
227	SLU 56	-6	-536	9906	7.73	12.31	-0.1
227	SLU 57	-6	-469	9846	5.57	12.61	-0.1
227	SLU 58	-6	-531	9838	7.64	12.22	-0.1
227	SLU 59	-6	-464	9778	5.47	12.52	-0.1
227	SLU 60	-6	-544	9891	8.13	12.15	-0.1
227	SLU 61	-6	-477	9831	5.96	12.45	-0.1

Nodo	Cont.	Reazione a traslazione			Reazione a rotazione		
Ind.	N.br.	x	y	z	x	y	z
227	SLU 62	-6	-553	10049	8.19	12.46	-0.1
227	SLU 63	-6	-486	9989	6.02	12.76	-0.1
227	SLU 64	-6	-507	9507	7.33	11.6	-0.1
227	SLU 65	-5	-395	9408	3.71	12.09	-0.09
227	SLU 66	-6	-521	9733	7.48	11.98	-0.1
227	SLU 67	-6	-454	9673	5.31	12.28	-0.09
227	SLU 68	-5	-404	9565	3.77	12.4	-0.09
227	SLU 69	-6	-530	9890	7.54	12.29	-0.1
227	SLU 70	-6	-463	9831	5.37	12.59	-0.1
227	SLU 71	-6	-525	9822	7.45	12.21	-0.1
227	SLU 72	-6	-458	9763	5.28	12.51	-0.09
227	SLU 73	-6	-467	10267	5.12	13.36	-0.1
227	SLU 74	-7	-593	10592	8.89	13.25	-0.11
227	SLU 75	-6	-526	10532	6.72	13.55	-0.1
227	SLU 76	-6	-476	10425	5.18	13.67	-0.1
227	SLU 77	-7	-602	10750	8.95	13.56	-0.11
227	SLU 78	-6	-535	10690	6.78	13.86	-0.1
227	SLU 79	-7	-597	10682	8.86	13.48	-0.11
227	SLU 80	-6	-530	10622	6.69	13.78	-0.1
227	SLU 81	-7	-610	10735	9.34	13.4	-0.11
227	SLU 82	-6	-543	10675	7.18	13.7	-0.11
227	SLU 83	-7	-619	10892	9.41	13.71	-0.11
227	SLU 84	-6	-552	10833	7.24	14.01	-0.11
227	SLE RA 1	-5	-375	7128	5.37	8.64	-0.07
227	SLE RA 2	-4	-301	7062	2.96	8.98	-0.07
227	SLE RA 3	-5	-385	7278	5.47	8.9	-0.07
227	SLE RA 4	-4	-340	7238	4.02	9.1	-0.07
227	SLE RA 5	-4	-307	7167	3	9.18	-0.07
227	SLE RA 6	-5	-391	7383	5.51	9.11	-0.07
227	SLE RA 7	-4	-346	7343	4.06	9.31	-0.07
227	SLE RA 8	-5	-387	7338	5.45	9.05	-0.07
227	SLE RA 9	-4	-343	7298	4	9.25	-0.07
227	SLE RA 10	-4	-349	7634	3.9	9.82	-0.07
227	SLE RA 11	-5	-433	7851	6.41	9.75	-0.08
227	SLE RA 12	-5	-388	7811	4.97	9.95	-0.08
227	SLE RA 13	-4	-355	7739	3.94	10.03	-0.08
227	SLE RA 14	-5	-439	7956	6.45	9.95	-0.08
227	SLE RA 15	-5	-394	7916	5.01	10.15	-0.08
227	SLE RA 16	-5	-436	7911	6.39	9.9	-0.08
227	SLE RA 17	-5	-391	7871	4.94	10.1	-0.08
227	SLE RA 18	-5	-444	7946	6.71	9.85	-0.08
227	SLE RA 19	-5	-399	7906	5.27	10.05	-0.08
227	SLE RA 20	-5	-450	8051	6.75	10.06	-0.08
227	SLE RA 21	-5	-405	8011	5.31	10.25	-0.08
227	SLE FR 1	-5	-375	7128	5.37	8.64	-0.07
227	SLE FR 2	-5	-361	7115	4.88	8.71	-0.07
227	SLE FR 3	-5	-378	7170	5.38	8.73	-0.07
227	SLE FR 4	-5	-381	7360	5.29	9.07	-0.07
227	SLE FR 5	-5	-398	7415	5.79	9.09	-0.07
227	SLE FR 6	-5	-410	7537	6.04	9.25	-0.08
227	SLE QP 1	-5	-375	7128	5.37	8.64	-0.07
227	SLE QP 2	-5	-396	7373	5.77	9.01	-0.07
227	SLD 1	-14	-396	9004	4.17	14.81	-0.14
227	SLD 2	-14	-396	9004	4.17	14.81	-0.14
227	SLD 3	-5	-768	9136	16.52	19.59	-0.1
227	SLD 4	-5	-768	9136	16.52	19.59	-0.1
227	SLD 5	-21	169	7661	-13.44	3.5	-0.16
227	SLD 6	-21	169	7661	-13.44	3.5	-0.16
227	SLD 7	8	-1073	8104	27.73	19.43	-0.01
227	SLD 8	8	-1073	8104	27.73	19.43	-0.01
227	SLD 9	-18	281	6643	-16.19	-1.42	-0.13
227	SLD 10	-18	281	6643	-16.19	-1.42	-0.13
227	SLD 11	11	-962	7086	24.98	14.52	0.01
227	SLD 12	11	-962	7086	24.98	14.52	0.01
227	SLD 13	-5	-24	5610	-4.98	-1.57	-0.05
227	SLD 14	-5	-24	5610	-4.98	-1.57	-0.05
227	SLD 15	4	-397	5743	7.37	3.21	-0.01
227	SLD 16	4	-397	5743	7.37	3.21	-0.01
227	SLV 1	-26	-398	11178	2.13	22.38	-0.23
227	SLV 2	-26	-398	11178	2.13	22.38	-0.23
227	SLV 3	-4	-1266	11513	30.9	34.17	-0.12
227	SLV 4	-4	-1266	11513	30.9	34.17	-0.12
227	SLV 5	-45	920	8006	-38.95	-4.86	-0.29
227	SLV 6	-45	920	8006	-38.95	-4.86	-0.29
227	SLV 7	29	-1974	9124	56.94	34.43	0.08
227	SLV 8	29	-1974	9124	56.94	34.43	0.08
227	SLV 9	-38	1182	5623	-45.39	-16.42	-0.23
227	SLV 10	-38	1182	5623	-45.39	-16.42	-0.23
227	SLV 11	35	-1712	6741	50.49	22.87	0.14
227	SLV 12	35	-1712	6741	50.49	22.87	0.14
227	SLV 13	-5	474	3234	-19.36	-16.16	-0.03
227	SLV 14	-5	474	3234	-19.36	-16.16	-0.03
227	SLV 15	17	-394	3569	9.41	-4.37	0.08
227	SLV 16	17	-394	3569	9.41	-4.37	0.08
228	SLU 1	3	-173	6364	2.74	1.33	0.01
228	SLU 2	2	-84	6276	-1.42	0.61	0.01
228	SLU 3	3	-175	6563	2.62	1.38	0.01
228	SLU 4	3	-122	6511	0.13	0.95	0.01
228	SLU 5	3	-83	6408	-1.62	0.66	0.01
228	SLU 6	4	-173	6696	2.42	1.43	0.01

Nodo	Cont.	Reazione a traslazione			Reazione a rotazione		
Ind.	N.br.	x	y	z	x	y	z
228	SLU 7	3	-120	6643	-0.08	1	0.01
228	SLU 8	4	-169	6628	2.33	1.43	0.01
228	SLU 9	3	-116	6576	-0.16	1	0.01
228	SLU 10	3	-133	7113	-0.16	0.55	0.01
228	SLU 11	4	-224	7400	3.89	1.32	0.01
228	SLU 12	3	-171	7347	1.39	0.89	0.01
228	SLU 13	3	-131	7245	-0.36	0.6	0.01
228	SLU 14	4	-222	7532	3.68	1.37	0.01
228	SLU 15	3	-169	7480	1.19	0.94	0.01
228	SLU 16	4	-218	7465	3.6	1.36	0.01
228	SLU 17	3	-165	7412	1.1	0.93	0.01
228	SLU 18	4	-243	7559	4.54	1.24	0.01
228	SLU 19	3	-190	7506	2.04	0.81	0.01
228	SLU 20	4	-241	7691	4.34	1.29	0.01
228	SLU 21	3	-188	7638	1.84	0.86	0.01
228	SLU 22	4	-214	7167	3.68	1.33	0.01
228	SLU 23	3	-125	7080	-0.48	0.61	0.01
228	SLU 24	4	-216	7367	3.57	1.38	0.01
228	SLU 25	3	-162	7315	1.07	0.95	0.01
228	SLU 26	3	-123	7212	-0.68	0.66	0.01
228	SLU 27	4	-214	7499	3.36	1.43	0.01
228	SLU 28	3	-160	7447	0.87	1	0.01
228	SLU 29	4	-210	7432	3.28	1.43	0.01
228	SLU 30	3	-157	7379	0.78	1	0.01
228	SLU 31	3	-174	7916	0.78	0.55	0.02
228	SLU 32	4	-264	8204	4.83	1.32	0.02
228	SLU 33	3	-211	8151	2.33	0.89	0.02
228	SLU 34	3	-172	8049	0.58	0.6	0.02
228	SLU 35	4	-262	8336	4.63	1.37	0.02
228	SLU 36	4	-209	8283	2.13	0.94	0.02
228	SLU 37	4	-259	8268	4.54	1.36	0.02
228	SLU 38	4	-206	8216	2.04	0.93	0.02
228	SLU 39	4	-284	8362	5.48	1.24	0.02
228	SLU 40	3	-230	8310	2.99	0.81	0.02
228	SLU 41	4	-282	8495	5.28	1.29	0.02
228	SLU 42	4	-228	8442	2.79	0.86	0.02
228	SLU 43	4	-211	7997	3.24	1.72	0.01
228	SLU 44	3	-122	7910	-0.93	1.01	0.01
228	SLU 45	4	-213	8197	3.12	1.78	0.01
228	SLU 46	4	-160	8145	0.62	1.35	0.01
228	SLU 47	3	-121	8042	-1.13	1.06	0.01
228	SLU 48	4	-211	8329	2.92	1.83	0.01
228	SLU 49	4	-158	8277	0.42	1.4	0.01
228	SLU 50	4	-207	8262	2.83	1.82	0.01
228	SLU 51	4	-154	8209	0.33	1.39	0.01
228	SLU 52	4	-171	8746	0.34	0.95	0.02
228	SLU 53	5	-262	9034	4.38	1.72	0.02
228	SLU 54	4	-209	8981	1.89	1.29	0.02
228	SLU 55	4	-169	8879	0.14	0.99	0.02
228	SLU 56	5	-260	9166	4.18	1.77	0.02
228	SLU 57	4	-207	9113	1.68	1.34	0.02
228	SLU 58	5	-256	9098	4.09	1.76	0.02
228	SLU 59	4	-203	9046	1.6	1.33	0.02
228	SLU 60	5	-281	9192	5.04	1.64	0.02
228	SLU 61	4	-228	9140	2.54	1.21	0.02
228	SLU 62	5	-279	9324	4.84	1.69	0.02
228	SLU 63	4	-226	9272	2.34	1.26	0.02
228	SLU 64	5	-252	8801	4.18	1.73	0.02
228	SLU 65	4	-163	8714	0.02	1.01	0.02
228	SLU 66	5	-254	9001	4.06	1.78	0.02
228	SLU 67	4	-200	8948	1.57	1.35	0.02
228	SLU 68	4	-161	8846	-0.18	1.06	0.02
228	SLU 69	5	-252	9133	3.86	1.83	0.02
228	SLU 70	4	-198	9080	1.37	1.4	0.02
228	SLU 71	5	-248	9065	3.77	1.82	0.02
228	SLU 72	4	-195	9013	1.28	1.39	0.02
228	SLU 73	4	-212	9550	1.28	0.95	0.02
228	SLU 74	5	-302	9837	5.33	1.72	0.02
228	SLU 75	4	-249	9785	2.83	1.29	0.02
228	SLU 76	4	-210	9682	1.08	1	0.02
228	SLU 77	5	-300	9969	5.12	1.77	0.02
228	SLU 78	4	-247	9917	2.63	1.34	0.02
228	SLU 79	5	-297	9902	5.04	1.76	0.02
228	SLU 80	4	-244	9849	2.54	1.33	0.02
228	SLU 81	5	-322	9996	5.98	1.64	0.02
228	SLU 82	4	-268	9944	3.49	1.21	0.02
228	SLU 83	5	-320	10128	5.78	1.69	0.02
228	SLU 84	4	-266	10076	3.28	1.26	0.02
228	SLE RA 1	3	-185	6593	3.01	1.33	0.01
228	SLE RA 2	3	-126	6535	0.23	0.85	0.01
228	SLE RA 3	4	-186	6727	2.93	1.36	0.01
228	SLE RA 4	3	-150	6692	1.27	1.08	0.01
228	SLE RA 5	3	-124	6623	0.1	0.88	0.01
228	SLE RA 6	4	-185	6815	2.8	1.4	0.01
228	SLE RA 7	3	-149	6780	1.13	1.11	0.01
228	SLE RA 8	4	-182	6770	2.74	1.39	0.01
228	SLE RA 9	3	-147	6735	1.07	1.11	0.01
228	SLE RA 10	3	-158	7093	1.08	0.81	0.01
228	SLE RA 11	4	-218	7284	3.77	1.32	0.01
228	SLE RA 12	3	-183	7249	2.11	1.04	0.01

Nodo	Cont.	Reazione a traslazione			Reazione a rotazione		
Ind.	N.br.	x	y	z	x	y	z
228	SLE RA 13	3	-157	7181	0.94	0.84	0.01
228	SLE RA 14	4	-217	7372	3.64	1.36	0.01
228	SLE RA 15	3	-182	7337	1.97	1.07	0.01
228	SLE RA 16	4	-215	7327	3.58	1.35	0.01
228	SLE RA 17	3	-179	7292	1.91	1.06	0.01
228	SLE RA 18	4	-231	7390	4.21	1.27	0.01
228	SLE RA 19	3	-196	7355	2.55	0.98	0.01
228	SLE RA 20	4	-230	7478	4.07	1.3	0.01
228	SLE RA 21	3	-195	7443	2.41	1.01	0.01
228	SLE FR 1	3	-185	6593	3.01	1.33	0.01
228	SLE FR 2	3	-173	6582	2.45	1.23	0.01
228	SLE FR 3	3	-184	6629	2.95	1.34	0.01
228	SLE FR 4	3	-187	6821	2.81	1.21	0.01
228	SLE FR 5	4	-198	6868	3.31	1.32	0.01
228	SLE FR 6	4	-208	6992	3.61	1.3	0.01
228	SLE QP 1	3	-185	6593	3.01	1.33	0.01
228	SLE QP 2	3	-199	6832	3.37	1.31	0.01
228	SLD 1	3	110	5037	-9.51	8.68	-0.01
228	SLD 2	3	110	5037	-9.51	8.68	-0.01
228	SLD 3	-6	-284	5167	9.32	4.3	-0.01
228	SLD 4	-6	-284	5167	9.32	4.3	-0.01
228	SLD 5	17	491	6096	-29.07	10.16	0.01
228	SLD 6	17	491	6096	-29.07	10.16	0.01
228	SLD 7	-13	-821	6530	33.72	-4.44	0
228	SLD 8	-13	-821	6530	33.72	-4.44	0
228	SLD 9	20	424	7135	-26.99	7.05	0.02
228	SLD 10	20	424	7135	-26.99	7.05	0.02
228	SLD 11	-10	-888	7568	35.8	-7.54	0.01
228	SLD 12	-10	-888	7568	35.8	-7.54	0.01
228	SLD 13	13	-113	8498	-2.59	-1.68	0.03
228	SLD 14	13	-113	8498	-2.59	-1.68	0.03
228	SLD 15	4	-507	8628	16.25	-6.06	0.03
228	SLD 16	4	-507	8628	16.25	-6.06	0.03
228	SLV 1	3	523	2622	-26.81	19.31	-0.03
228	SLV 2	3	523	2622	-26.81	19.31	-0.03
228	SLV 3	-21	-396	2943	17.14	8.26	-0.04
228	SLV 4	-21	-396	2943	17.14	8.26	-0.04
228	SLV 5	39	1411	5083	-72.35	23.47	0.01
228	SLV 6	39	1411	5083	-72.35	23.47	0.01
228	SLV 7	-40	-1651	6152	74.16	-13.36	-0.01
228	SLV 8	-40	-1651	6152	74.16	-13.36	-0.01
228	SLV 9	46	1254	7513	-67.43	15.98	0.04
228	SLV 10	46	1254	7513	-67.43	15.98	0.04
228	SLV 11	-32	-1809	8582	79.08	-20.85	0.01
228	SLV 12	-32	-1809	8582	79.08	-20.85	0.01
228	SLV 13	28	-2	10722	-10.41	-5.65	0.06
228	SLV 14	28	-2	10722	-10.41	-5.65	0.06
228	SLV 15	4	-920	11042	33.54	-16.69	0.05
228	SLV 16	4	-920	11042	33.54	-16.69	0.05
229	SLU 1	33	220	1322	5.79	21.37	-3.4
229	SLU 2	32	213	1293	5.83	21.11	-3.36
229	SLU 3	34	223	1357	6.22	22.29	-3.55
229	SLU 4	34	219	1340	6.25	22.14	-3.53
229	SLU 5	33	215	1316	6.15	21.75	-3.47
229	SLU 6	35	225	1380	6.54	22.93	-3.65
229	SLU 7	35	221	1363	6.57	22.78	-3.63
229	SLU 8	35	223	1367	6.42	22.65	-3.61
229	SLU 9	34	219	1350	6.45	22.5	-3.58
229	SLU 10	38	231	1437	7.24	24.77	-3.95
229	SLU 11	40	240	1501	7.62	25.95	-4.13
229	SLU 12	39	237	1484	7.65	25.8	-4.11
229	SLU 13	39	233	1460	7.56	25.41	-4.05
229	SLU 14	41	242	1524	7.94	26.59	-4.24
229	SLU 15	40	239	1506	7.97	26.44	-4.21
229	SLU 16	40	241	1511	7.83	26.3	-4.19
229	SLU 17	40	237	1494	7.86	26.15	-4.17
229	SLU 18	41	245	1528	7.8	26.59	-4.24
229	SLU 19	40	241	1510	7.82	26.44	-4.21
229	SLU 20	42	246	1550	8.11	27.23	-4.34
229	SLU 21	41	243	1533	8.14	27.08	-4.31
229	SLU 22	38	237	1466	7.2	24.97	-3.98
229	SLU 23	38	231	1437	7.24	24.71	-3.94
229	SLU 24	40	240	1501	7.63	25.89	-4.13
229	SLU 25	39	237	1484	7.66	25.74	-4.1
229	SLU 26	39	232	1460	7.56	25.35	-4.04
229	SLU 27	41	242	1524	7.95	26.53	-4.23
229	SLU 28	40	238	1506	7.97	26.38	-4.2
229	SLU 29	40	241	1511	7.83	26.25	-4.18
229	SLU 30	40	237	1494	7.86	26.09	-4.16
229	SLU 31	43	248	1581	8.65	28.37	-4.52
229	SLU 32	45	258	1645	9.03	29.55	-4.71
229	SLU 33	45	254	1627	9.06	29.39	-4.68
229	SLU 34	44	250	1604	8.97	29.01	-4.62
229	SLU 35	46	260	1667	9.35	30.19	-4.81
229	SLU 36	46	256	1650	9.38	30.04	-4.79
229	SLU 37	46	258	1655	9.24	29.9	-4.77
229	SLU 38	46	254	1638	9.27	29.75	-4.74
229	SLU 39	46	262	1671	9.21	30.19	-4.81
229	SLU 40	46	258	1654	9.23	30.03	-4.79
229	SLU 41	47	264	1694	9.52	30.83	-4.91

Nodo	Cont.	Reazione a traslazione			Reazione a rotazione		
Ind.	N.br.	x	y	z	x	y	z
229	SLU 42	47	260	1677	9.55	30.67	-4.89
229	SLU 43	40	279	1669	7.04	26.54	-4.23
229	SLU 44	40	273	1641	7.09	26.29	-4.19
229	SLU 45	42	283	1704	7.47	27.47	-4.38
229	SLU 46	42	279	1687	7.5	27.32	-4.35
229	SLU 47	41	275	1663	7.41	26.93	-4.29
229	SLU 48	43	285	1727	7.79	28.11	-4.48
229	SLU 49	43	281	1710	7.82	27.96	-4.45
229	SLU 50	42	283	1715	7.68	27.83	-4.43
229	SLU 51	42	279	1698	7.7	27.67	-4.41
229	SLU 52	46	291	1784	8.49	29.94	-4.77
229	SLU 53	48	300	1848	8.88	31.12	-4.96
229	SLU 54	47	297	1831	8.91	30.97	-4.93
229	SLU 55	47	292	1807	8.81	30.58	-4.87
229	SLU 56	49	302	1871	9.2	31.77	-5.06
229	SLU 57	48	298	1854	9.22	31.61	-5.04
229	SLU 58	48	301	1859	9.08	31.48	-5.02
229	SLU 59	48	297	1841	9.11	31.33	-4.99
229	SLU 60	49	304	1875	9.05	31.76	-5.06
229	SLU 61	48	301	1858	9.08	31.61	-5.04
229	SLU 62	50	306	1898	9.37	32.41	-5.16
229	SLU 63	49	303	1880	9.39	32.25	-5.14
229	SLU 64	46	297	1813	8.45	30.14	-4.8
229	SLU 65	46	291	1784	8.5	29.89	-4.76
229	SLU 66	48	300	1848	8.88	31.07	-4.95
229	SLU 67	47	296	1831	8.91	30.92	-4.93
229	SLU 68	47	292	1807	8.81	30.53	-4.86
229	SLU 69	48	302	1871	9.2	31.71	-5.05
229	SLU 70	48	298	1854	9.23	31.56	-5.03
229	SLU 71	48	301	1859	9.09	31.42	-5.01
229	SLU 72	48	297	1841	9.11	31.27	-4.98
229	SLU 73	51	308	1928	9.9	33.54	-5.34
229	SLU 74	53	318	1992	10.29	34.72	-5.53
229	SLU 75	53	314	1975	10.32	34.57	-5.51
229	SLU 76	52	310	1951	10.22	34.18	-5.45
229	SLU 77	54	320	2015	10.61	35.36	-5.64
229	SLU 78	54	316	1998	10.63	35.21	-5.61
229	SLU 79	54	318	2002	10.49	35.08	-5.59
229	SLU 80	53	314	1985	10.52	34.93	-5.57
229	SLU 81	54	322	2019	10.46	35.36	-5.64
229	SLU 82	54	318	2001	10.49	35.21	-5.61
229	SLU 83	55	324	2041	10.78	36	-5.74
229	SLU 84	55	320	2024	10.8	35.85	-5.71
229	SLE RA 1	34	225	1363	6.19	22.4	-3.57
229	SLE RA 2	34	220	1344	6.22	22.23	-3.54
229	SLE RA 3	35	227	1386	6.48	23.01	-3.67
229	SLE RA 4	35	224	1375	6.5	22.91	-3.65
229	SLE RA 5	35	222	1359	6.43	22.65	-3.61
229	SLE RA 6	36	228	1402	6.69	23.44	-3.73
229	SLE RA 7	36	226	1390	6.71	23.34	-3.72
229	SLE RA 8	36	227	1393	6.61	23.25	-3.7
229	SLE RA 9	35	224	1382	6.63	23.15	-3.69
229	SLE RA 10	38	232	1440	7.16	24.66	-3.93
229	SLE RA 11	39	238	1482	7.42	25.45	-4.06
229	SLE RA 12	39	236	1471	7.43	25.35	-4.04
229	SLE RA 13	38	233	1455	7.37	25.09	-4
229	SLE RA 14	40	240	1498	7.63	25.88	-4.12
229	SLE RA 15	39	237	1486	7.65	25.77	-4.11
229	SLE RA 16	39	239	1489	7.55	25.69	-4.09
229	SLE RA 17	39	236	1478	7.57	25.58	-4.08
229	SLE RA 18	40	241	1500	7.53	25.88	-4.12
229	SLE RA 19	39	239	1489	7.55	25.77	-4.11
229	SLE RA 20	40	242	1515	7.74	26.3	-4.19
229	SLE RA 21	40	240	1504	7.76	26.2	-4.18
229	SLE FR 1	34	225	1363	6.19	22.4	-3.57
229	SLE FR 2	34	224	1359	6.2	22.36	-3.56
229	SLE FR 3	34	225	1369	6.27	22.57	-3.6
229	SLE FR 4	36	229	1400	6.6	23.41	-3.73
229	SLE FR 5	36	230	1410	6.68	23.61	-3.76
229	SLE FR 6	37	233	1432	6.86	24.14	-3.85
229	SLE QP 1	34	225	1363	6.19	22.4	-3.57
229	SLE QP 2	36	230	1404	6.59	23.44	-3.73
229	SLD 1	49	279	2390	6.41	30.38	-4.83
229	SLD 2	49	279	2390	6.41	30.38	-4.83
229	SLD 3	55	-93	1224	18.38	33.17	-5.28
229	SLD 4	55	-93	1224	18.38	33.17	-5.28
229	SLD 5	32	808	3469	-11.61	21.29	-3.39
229	SLD 6	32	808	3469	-11.61	21.29	-3.39
229	SLD 7	49	-431	-419	28.28	30.59	-4.87
229	SLD 8	49	-431	-419	28.28	30.59	-4.87
229	SLD 9	23	890	3227	-15.1	16.29	-2.6
229	SLD 10	23	890	3227	-15.1	16.29	-2.6
229	SLD 11	39	-349	-660	24.8	25.59	-4.08
229	SLD 12	39	-349	-660	24.8	25.59	-4.08
229	SLD 13	17	552	1584	-5.2	13.71	-2.19
229	SLD 14	17	552	1584	-5.2	13.71	-2.19
229	SLD 15	22	180	418	6.77	16.5	-2.64
229	SLD 16	22	180	418	6.77	16.5	-2.64
229	SLV 1	68	348	3772	6.03	39.64	-6.29
229	SLV 2	68	348	3772	6.03	39.64	-6.29

Nodo	Cont.	Reazione a traslazione			Reazione a rotazione		
Ind.	N.br.	x	y	z	x	y	z
229	SLV 3	80	-543	979	34.68	46.26	-7.35
229	SLV 4	80	-543	979	34.68	46.26	-7.35
229	SLV 5	27	1616	6350	-37.03	18.25	-2.9
229	SLV 6	27	1616	6350	-37.03	18.25	-2.9
229	SLV 7	67	-1353	-2959	58.47	40.33	-6.42
229	SLV 8	67	-1353	-2959	58.47	40.33	-6.42
229	SLV 9	4	1812	5768	-45.29	6.55	-1.05
229	SLV 10	4	1812	5768	-45.29	6.55	-1.05
229	SLV 11	44	-1157	-3542	50.21	28.63	-4.57
229	SLV 12	44	-1157	-3542	50.21	28.63	-4.57
229	SLV 13	-8	1002	1829	-21.5	0.62	-0.12
229	SLV 14	-8	1002	1829	-21.5	0.62	-0.12
229	SLV 15	4	111	-963	7.15	7.24	-1.18
229	SLV 16	4	111	-963	7.15	7.24	-1.18
230	SLU 1	2	688	2649	-14.02	0.51	-0.11
230	SLU 2	2	688	2645	-14.03	0.5	-0.11
230	SLU 3	2	714	2750	-14.49	0.54	-0.12
230	SLU 4	2	713	2747	-14.5	0.53	-0.12
230	SLU 5	2	705	2713	-14.34	0.52	-0.11
230	SLU 6	2	731	2818	-14.8	0.56	-0.12
230	SLU 7	2	730	2815	-14.81	0.56	-0.12
230	SLU 8	2	722	2785	-14.64	0.55	-0.12
230	SLU 9	2	722	2783	-14.64	0.55	-0.12
230	SLU 10	3	798	3074	-16.18	0.61	-0.13
230	SLU 11	3	824	3179	-16.65	0.65	-0.14
230	SLU 12	3	824	3177	-16.65	0.64	-0.14
230	SLU 13	3	815	3143	-16.49	0.63	-0.14
230	SLU 14	3	841	3248	-16.96	0.67	-0.14
230	SLU 15	3	841	3245	-16.96	0.67	-0.14
230	SLU 16	3	833	3215	-16.8	0.66	-0.14
230	SLU 17	3	832	3212	-16.8	0.66	-0.14
230	SLU 18	3	846	3263	-17.1	0.67	-0.14
230	SLU 19	3	846	3260	-17.11	0.66	-0.14
230	SLU 20	3	863	3331	-17.41	0.69	-0.15
230	SLU 21	3	862	3328	-17.42	0.68	-0.15
230	SLU 22	3	794	3060	-16.08	0.61	-0.13
230	SLU 23	3	793	3056	-16.09	0.61	-0.13
230	SLU 24	3	819	3161	-16.56	0.64	-0.14
230	SLU 25	3	819	3158	-16.56	0.64	-0.14
230	SLU 26	3	810	3124	-16.4	0.63	-0.14
230	SLU 27	3	836	3229	-16.87	0.67	-0.14
230	SLU 28	3	836	3226	-16.87	0.66	-0.14
230	SLU 29	3	828	3196	-16.7	0.66	-0.14
230	SLU 30	3	827	3194	-16.71	0.66	-0.14
230	SLU 31	3	903	3485	-18.25	0.72	-0.16
230	SLU 32	3	929	3590	-18.71	0.76	-0.16
230	SLU 33	3	929	3588	-18.72	0.75	-0.16
230	SLU 34	3	920	3554	-18.56	0.74	-0.16
230	SLU 35	3	946	3659	-19.02	0.78	-0.17
230	SLU 36	3	946	3656	-19.03	0.77	-0.17
230	SLU 37	3	938	3626	-18.86	0.77	-0.17
230	SLU 38	3	938	3623	-18.86	0.77	-0.16
230	SLU 39	3	951	3674	-19.17	0.77	-0.17
230	SLU 40	3	951	3671	-19.17	0.77	-0.17
230	SLU 41	4	968	3742	-19.48	0.79	-0.17
230	SLU 42	3	968	3739	-19.48	0.79	-0.17
230	SLU 43	3	859	3302	-17.52	0.62	-0.14
230	SLU 44	3	858	3298	-17.53	0.62	-0.13
230	SLU 45	3	884	3403	-17.99	0.65	-0.14
230	SLU 46	3	884	3401	-18	0.65	-0.14
230	SLU 47	3	875	3366	-17.84	0.64	-0.14
230	SLU 48	3	901	3471	-18.3	0.68	-0.15
230	SLU 49	3	901	3469	-18.31	0.67	-0.15
230	SLU 50	3	893	3439	-18.14	0.67	-0.14
230	SLU 51	3	892	3436	-18.14	0.66	-0.14
230	SLU 52	3	968	3728	-19.68	0.73	-0.16
230	SLU 53	3	994	3833	-20.15	0.76	-0.16
230	SLU 54	3	994	3831	-20.15	0.76	-0.16
230	SLU 55	3	985	3796	-19.99	0.75	-0.16
230	SLU 56	3	1011	3901	-20.46	0.79	-0.17
230	SLU 57	3	1011	3899	-20.46	0.78	-0.17
230	SLU 58	3	1003	3869	-20.3	0.78	-0.17
230	SLU 59	3	1003	3866	-20.3	0.78	-0.17
230	SLU 60	3	1016	3916	-20.6	0.78	-0.17
230	SLU 61	3	1016	3914	-20.61	0.78	-0.17
230	SLU 62	4	1033	3985	-20.91	0.8	-0.17
230	SLU 63	4	1033	3982	-20.92	0.8	-0.17
230	SLU 64	3	964	3714	-19.58	0.73	-0.16
230	SLU 65	3	963	3709	-19.59	0.72	-0.16
230	SLU 66	3	989	3814	-20.06	0.76	-0.16
230	SLU 67	3	989	3812	-20.06	0.76	-0.16
230	SLU 68	3	980	3778	-19.9	0.75	-0.16
230	SLU 69	3	1006	3883	-20.37	0.78	-0.17
230	SLU 70	3	1006	3880	-20.37	0.78	-0.17
230	SLU 71	3	998	3850	-20.2	0.77	-0.17
230	SLU 72	3	998	3847	-20.21	0.77	-0.17
230	SLU 73	4	1074	4139	-21.75	0.83	-0.18
230	SLU 74	4	1100	4244	-22.21	0.87	-0.19
230	SLU 75	4	1099	4242	-22.22	0.87	-0.19
230	SLU 76	4	1091	4207	-22.06	0.86	-0.18

Nodo	Cont.	Reazione a traslazione			Reazione a rotazione		
Ind.	N.br.	x	y	z	x	y	z
230	SLU 77	4	1117	4312	-22.52	0.89	-0.19
230	SLU 78	4	1116	4310	-22.53	0.89	-0.19
230	SLU 79	4	1108	4280	-22.36	0.89	-0.19
230	SLU 80	4	1108	4277	-22.36	0.88	-0.19
230	SLU 81	4	1122	4327	-22.67	0.89	-0.19
230	SLU 82	4	1121	4325	-22.67	0.88	-0.19
230	SLU 83	4	1139	4396	-22.98	0.91	-0.2
230	SLU 84	4	1138	4393	-22.98	0.91	-0.2
230	SLE RA 1	2	719	2766	-14.61	0.54	-0.12
230	SLE RA 2	2	718	2763	-14.61	0.53	-0.12
230	SLE RA 3	2	735	2833	-14.93	0.56	-0.12
230	SLE RA 4	2	735	2832	-14.93	0.56	-0.12
230	SLE RA 5	2	729	2809	-14.82	0.55	-0.12
230	SLE RA 6	3	747	2879	-15.13	0.57	-0.12
230	SLE RA 7	3	746	2877	-15.13	0.57	-0.12
230	SLE RA 8	3	741	2857	-15.02	0.57	-0.12
230	SLE RA 9	3	741	2855	-15.03	0.57	-0.12
230	SLE RA 10	3	792	3050	-16.05	0.61	-0.13
230	SLE RA 11	3	809	3120	-16.36	0.63	-0.14
230	SLE RA 12	3	809	3118	-16.37	0.63	-0.14
230	SLE RA 13	3	803	3095	-16.26	0.62	-0.13
230	SLE RA 14	3	820	3165	-16.57	0.65	-0.14
230	SLE RA 15	3	820	3164	-16.57	0.64	-0.14
230	SLE RA 16	3	815	3144	-16.46	0.64	-0.14
230	SLE RA 17	3	814	3142	-16.46	0.64	-0.14
230	SLE RA 18	3	824	3175	-16.67	0.64	-0.14
230	SLE RA 19	3	823	3174	-16.67	0.64	-0.14
230	SLE RA 20	3	835	3221	-16.87	0.66	-0.14
230	SLE RA 21	3	835	3219	-16.87	0.66	-0.14
230	SLE FR 1	2	719	2766	-14.61	0.54	-0.12
230	SLE FR 2	2	718	2766	-14.61	0.54	-0.12
230	SLE FR 3	2	723	2784	-14.69	0.54	-0.12
230	SLE FR 4	3	750	2888	-15.23	0.57	-0.12
230	SLE FR 5	3	755	2907	-15.31	0.58	-0.12
230	SLE FR 6	3	771	2971	-15.64	0.59	-0.13
230	SLE QP 1	2	719	2766	-14.61	0.54	-0.12
230	SLE QP 2	3	750	2889	-15.23	0.57	-0.12
230	SLD 1	10	776	2985	-16.23	2.65	-0.55
230	SLD 2	10	776	2985	-16.23	2.65	-0.55
230	SLD 3	17	490	2121	-6.7	5.13	-1.02
230	SLD 4	17	490	2121	-6.7	5.13	-1.02
230	SLD 5	-6	1192	4227	-29.98	-2.55	0.47
230	SLD 6	-6	1192	4227	-29.98	-2.55	0.47
230	SLD 7	17	238	1349	1.78	5.69	-1.11
230	SLD 8	17	238	1349	1.78	5.69	-1.11
230	SLD 9	-12	1262	4429	-32.24	-4.55	0.86
230	SLD 10	-12	1262	4429	-32.24	-4.55	0.86
230	SLD 11	11	308	1551	-0.48	3.69	-0.71
230	SLD 12	11	308	1551	-0.48	3.69	-0.71
230	SLD 13	-12	1010	3657	-23.75	-3.99	0.77
230	SLD 14	-12	1010	3657	-23.75	-3.99	0.77
230	SLD 15	-5	724	2793	-14.23	-1.52	0.3
230	SLD 16	-5	724	2793	-14.23	-1.52	0.3
230	SLV 1	20	820	3136	-17.83	5.23	-1.07
230	SLV 2	20	820	3136	-17.83	5.23	-1.07
230	SLV 3	37	133	1062	5.03	11.49	-2.27
230	SLV 4	37	133	1062	5.03	11.49	-2.27
230	SLV 5	-19	1812	6109	-50.68	-7.53	1.41
230	SLV 6	-19	1812	6109	-50.68	-7.53	1.41
230	SLV 7	39	-476	-805	25.52	13.34	-2.58
230	SLV 8	39	-476	-805	25.52	13.34	-2.58
230	SLV 9	-34	1976	6583	-55.98	-12.2	2.34
230	SLV 10	-34	1976	6583	-55.98	-12.2	2.34
230	SLV 11	24	-312	-331	20.22	8.67	-1.65
230	SLV 12	24	-312	-331	20.22	8.67	-1.65
230	SLV 13	-32	1367	4716	-35.49	-10.35	2.02
230	SLV 14	-32	1367	4716	-35.49	-10.35	2.02
230	SLV 15	-15	680	2642	-12.63	-4.09	0.83
230	SLV 16	-15	680	2642	-12.63	-4.09	0.83
231	SLU 1	15	-607	6604	25.47	16.98	0.06
231	SLU 2	16	-495	6507	21.69	17.5	0.06
231	SLU 3	16	-632	6819	26.54	17.7	0.06
231	SLU 4	16	-564	6761	24.27	18.01	0.06
231	SLU 5	16	-512	6659	22.46	18.04	0.06
231	SLU 6	16	-648	6971	27.31	18.24	0.06
231	SLU 7	17	-581	6913	25.04	18.55	0.07
231	SLU 8	16	-641	6908	27.01	18.06	0.06
231	SLU 9	16	-573	6850	24.74	18.38	0.06
231	SLU 10	18	-596	7303	25.61	19.87	0.07
231	SLU 11	18	-733	7615	30.46	20.06	0.07
231	SLU 12	18	-665	7557	28.19	20.37	0.07
231	SLU 13	18	-613	7455	26.38	20.41	0.07
231	SLU 14	18	-750	7767	31.23	20.6	0.07
231	SLU 15	19	-682	7709	28.96	20.92	0.07
231	SLU 16	18	-742	7703	30.93	20.42	0.07
231	SLU 17	19	-675	7646	28.66	20.74	0.07
231	SLU 18	18	-752	7741	31.07	20.36	0.07
231	SLU 19	18	-684	7683	28.81	20.67	0.07
231	SLU 20	18	-768	7893	31.85	20.9	0.07
231	SLU 21	19	-701	7835	29.58	21.21	0.07

Nodo	Cont.	Reazione a traslazione			Reazione a rotazione		
Ind.	N.br.	x	y	z	x	y	z
231	SLU 22	17	-705	7391	29.33	19.35	0.07
231	SLU 23	18	-592	7295	25.55	19.87	0.07
231	SLU 24	18	-729	7606	30.4	20.06	0.07
231	SLU 25	18	-662	7549	28.13	20.38	0.07
231	SLU 26	18	-609	7447	26.32	20.41	0.07
231	SLU 27	18	-746	7758	31.17	20.61	0.07
231	SLU 28	19	-678	7701	28.9	20.92	0.07
231	SLU 29	18	-738	7695	30.87	20.43	0.07
231	SLU 30	19	-671	7637	28.61	20.74	0.07
231	SLU 31	20	-693	8091	29.47	22.24	0.08
231	SLU 32	20	-830	8402	34.32	22.43	0.08
231	SLU 33	20	-763	8345	32.05	22.74	0.08
231	SLU 34	20	-710	8243	30.24	22.78	0.08
231	SLU 35	20	-847	8554	35.09	22.97	0.08
231	SLU 36	21	-780	8496	32.82	23.28	0.08
231	SLU 37	20	-839	8491	34.8	22.79	0.08
231	SLU 38	21	-772	8433	32.53	23.11	0.08
231	SLU 39	20	-849	8528	34.94	22.73	0.08
231	SLU 40	20	-782	8470	32.67	23.04	0.08
231	SLU 41	21	-866	8680	35.71	23.27	0.08
231	SLU 42	21	-798	8622	33.44	23.58	0.08
231	SLU 43	19	-756	8315	31.79	21.26	0.07
231	SLU 44	19	-644	8219	28.01	21.79	0.08
231	SLU 45	19	-780	8530	32.86	21.98	0.08
231	SLU 46	20	-713	8472	30.59	22.29	0.08
231	SLU 47	20	-660	8370	28.78	22.33	0.08
231	SLU 48	20	-797	8682	33.63	22.52	0.08
231	SLU 49	20	-730	8624	31.36	22.83	0.08
231	SLU 50	20	-790	8619	33.33	22.34	0.08
231	SLU 51	20	-722	8561	31.06	22.66	0.08
231	SLU 52	22	-745	9014	31.93	24.15	0.08
231	SLU 53	22	-881	9326	36.78	24.34	0.08
231	SLU 54	22	-814	9268	34.51	24.66	0.09
231	SLU 55	22	-761	9166	32.7	24.69	0.09
231	SLU 56	22	-898	9478	37.55	24.88	0.09
231	SLU 57	22	-831	9420	35.28	25.2	0.09
231	SLU 58	22	-891	9415	37.25	24.71	0.09
231	SLU 59	22	-823	9357	34.98	25.02	0.09
231	SLU 60	22	-900	9452	37.39	24.64	0.08
231	SLU 61	22	-833	9394	35.12	24.95	0.09
231	SLU 62	22	-917	9604	38.16	25.18	0.09
231	SLU 63	23	-850	9546	35.89	25.49	0.09
231	SLU 64	21	-853	9102	35.65	23.63	0.08
231	SLU 65	22	-741	9006	31.87	24.15	0.08
231	SLU 66	22	-878	9318	36.72	24.35	0.08
231	SLU 67	22	-810	9260	34.45	24.66	0.09
231	SLU 68	22	-758	9158	32.64	24.7	0.09
231	SLU 69	22	-895	9470	37.49	24.89	0.09
231	SLU 70	22	-827	9412	35.22	25.2	0.09
231	SLU 71	22	-887	9406	37.19	24.71	0.09
231	SLU 72	22	-820	9348	34.92	25.03	0.09
231	SLU 73	24	-842	9802	35.79	26.52	0.09
231	SLU 74	24	-979	10114	40.64	26.71	0.09
231	SLU 75	24	-911	10056	38.37	27.03	0.09
231	SLU 76	24	-859	9954	36.56	27.06	0.1
231	SLU 77	24	-996	10265	41.41	27.25	0.09
231	SLU 78	25	-928	10208	39.14	27.57	0.1
231	SLU 79	24	-988	10202	41.11	27.08	0.09
231	SLU 80	24	-921	10144	38.84	27.39	0.1
231	SLU 81	24	-998	10239	41.25	27.01	0.09
231	SLU 82	24	-930	10181	38.98	27.32	0.09
231	SLU 83	24	-1015	10391	42.02	27.55	0.09
231	SLU 84	25	-947	10333	39.75	27.86	0.1
231	SLE RA 1	16	-635	6829	26.58	17.66	0.06
231	SLE RA 2	16	-560	6764	24.05	18.01	0.06
231	SLE RA 3	16	-651	6972	27.29	18.13	0.06
231	SLE RA 4	16	-606	6934	25.77	18.34	0.06
231	SLE RA 5	16	-571	6866	24.57	18.37	0.06
231	SLE RA 6	16	-663	7074	27.8	18.49	0.06
231	SLE RA 7	17	-618	7035	26.29	18.7	0.07
231	SLE RA 8	16	-657	7031	27.6	18.38	0.06
231	SLE RA 9	17	-613	6993	26.09	18.59	0.06
231	SLE RA 10	17	-627	7295	26.67	19.58	0.07
231	SLE RA 11	17	-719	7503	29.9	19.71	0.07
231	SLE RA 12	18	-674	7464	28.39	19.92	0.07
231	SLE RA 13	18	-639	7396	27.18	19.94	0.07
231	SLE RA 14	18	-730	7604	30.42	20.07	0.07
231	SLE RA 15	18	-685	7566	28.9	20.28	0.07
231	SLE RA 16	18	-725	7562	30.22	19.95	0.07
231	SLE RA 17	18	-680	7523	28.7	20.16	0.07
231	SLE RA 18	18	-731	7587	30.31	19.91	0.07
231	SLE RA 19	18	-686	7548	28.8	20.12	0.07
231	SLE RA 20	18	-742	7688	30.82	20.27	0.07
231	SLE RA 21	18	-698	7649	29.31	20.48	0.07
231	SLE FR 1	16	-635	6829	26.58	17.66	0.06
231	SLE FR 2	16	-620	6816	26.07	17.73	0.06
231	SLE FR 3	16	-639	6869	26.78	17.8	0.06
231	SLE FR 4	16	-649	7043	27.19	18.4	0.06
231	SLE FR 5	16	-668	7097	27.9	18.48	0.06
231	SLE FR 6	17	-683	7208	28.44	18.78	0.06

Nodo	Cont.	Reazione a traslazione			Reazione a rotazione		
Ind.	N.br.	x	y	z	x	y	z
231	SLE QP 1	16	-635	6829	26.58	17.66	0.06
231	SLE QP 2	16	-664	7056	27.7	18.33	0.06
231	SLD 1	26	-697	8566	29.47	32.59	0.1
231	SLD 2	26	-697	8566	29.47	32.59	0.1
231	SLD 3	35	-1072	8720	42.04	38.97	0.14
231	SLD 4	35	-1072	8720	42.04	38.97	0.14
231	SLD 5	6	-106	7275	9.17	12.94	0
231	SLD 6	6	-106	7275	9.17	12.94	0
231	SLD 7	35	-1354	7790	51.06	34.19	0.16
231	SLD 8	35	-1354	7790	51.06	34.19	0.16
231	SLD 9	-3	27	6322	4.33	2.47	-0.03
231	SLD 10	-3	27	6322	4.33	2.47	-0.03
231	SLD 11	26	-1222	6837	46.22	23.72	0.12
231	SLD 12	26	-1222	6837	46.22	23.72	0.12
231	SLD 13	-2	-256	5392	13.35	-2.3	-0.02
231	SLD 14	-2	-256	5392	13.35	-2.3	-0.02
231	SLD 15	6	-630	5546	25.92	4.07	0.03
231	SLD 16	6	-630	5546	25.92	4.07	0.03
231	SLV 1	39	-745	10582	31.93	51.62	0.14
231	SLV 2	39	-745	10582	31.93	51.62	0.14
231	SLV 3	60	-1618	10961	61.27	67	0.25
231	SLV 4	60	-1618	10961	61.27	67	0.25
231	SLV 5	-10	636	7539	-15.52	5	-0.09
231	SLV 6	-10	636	7539	-15.52	5	-0.09
231	SLV 7	62	-2274	8803	82.26	56.25	0.3
231	SLV 8	62	-2274	8803	82.26	56.25	0.3
231	SLV 9	-30	946	5309	-26.87	-19.58	-0.17
231	SLV 10	-30	946	5309	-26.87	-19.58	-0.17
231	SLV 11	42	-1964	6573	70.92	31.66	0.22
231	SLV 12	42	-1964	6573	70.92	31.66	0.22
231	SLV 13	-28	290	3151	-5.88	-30.33	-0.13
231	SLV 14	-28	290	3151	-5.88	-30.33	-0.13
231	SLV 15	-6	-583	3530	23.46	-14.96	-0.01
231	SLV 16	-6	-583	3530	23.46	-14.96	-0.01
232	SLU 1	5	-321	6263	19.26	2.7	0
232	SLU 2	4	-230	6171	14.8	1.79	0
232	SLU 3	5	-328	6465	19.8	2.8	0
232	SLU 4	4	-274	6409	17.13	2.25	0
232	SLU 5	4	-232	6307	15.03	1.87	0
232	SLU 6	5	-330	6601	20.03	2.88	0
232	SLU 7	4	-276	6545	17.36	2.33	0
232	SLU 8	5	-324	6536	19.72	2.86	0
232	SLU 9	4	-270	6481	17.04	2.31	0
232	SLU 10	4	-299	6966	18.58	1.92	0
232	SLU 11	5	-397	7260	23.59	2.93	0
232	SLU 12	5	-343	7205	20.92	2.39	0
232	SLU 13	4	-301	7103	18.81	2	0
232	SLU 14	5	-399	7397	23.82	3.01	0
232	SLU 15	5	-345	7341	21.14	2.46	0
232	SLU 16	5	-393	7332	23.5	2.99	0
232	SLU 17	5	-339	7277	20.83	2.45	0
232	SLU 18	5	-419	7401	24.66	2.89	0
232	SLU 19	5	-365	7345	21.99	2.34	0
232	SLU 20	5	-421	7537	24.89	2.97	0
232	SLU 21	5	-367	7481	22.22	2.42	0
232	SLU 22	5	-382	7035	22.71	2.88	0
232	SLU 23	4	-292	6942	18.25	1.97	0
232	SLU 24	5	-390	7237	23.26	2.98	0
232	SLU 25	5	-335	7181	20.58	2.43	0
232	SLU 26	4	-293	7079	18.48	2.05	0
232	SLU 27	5	-391	7373	23.49	3.06	0
232	SLU 28	5	-337	7317	20.81	2.51	0
232	SLU 29	5	-385	7308	23.17	3.04	0
232	SLU 30	5	-331	7253	20.49	2.5	0
232	SLU 31	5	-361	7738	22.04	2.1	0
232	SLU 32	6	-458	8032	27.04	3.11	0
232	SLU 33	5	-404	7977	24.37	2.57	0
232	SLU 34	5	-362	7875	22.27	2.18	0
232	SLU 35	6	-460	8169	27.27	3.19	0
232	SLU 36	5	-406	8113	24.6	2.65	0
232	SLU 37	6	-454	8104	26.95	3.17	0
232	SLU 38	5	-400	8049	24.28	2.63	0
232	SLU 39	6	-481	8172	28.11	3.07	0
232	SLU 40	5	-426	8117	25.44	2.52	0
232	SLU 41	6	-482	8309	28.34	3.15	0
232	SLU 42	5	-428	8253	25.67	2.6	0
232	SLU 43	6	-396	7878	23.85	3.45	0
232	SLU 44	5	-306	7785	19.39	2.54	0
232	SLU 45	6	-404	8079	24.4	3.55	0
232	SLU 46	5	-349	8023	21.72	3	0
232	SLU 47	5	-307	7921	19.62	2.62	0
232	SLU 48	6	-405	8215	24.63	3.63	0
232	SLU 49	6	-351	8160	21.95	3.08	0
232	SLU 50	6	-400	8151	24.31	3.61	0
232	SLU 51	6	-345	8095	21.64	3.06	0
232	SLU 52	5	-375	8581	23.18	2.67	0
232	SLU 53	6	-473	8875	28.18	3.68	0
232	SLU 54	6	-418	8819	25.51	3.13	0
232	SLU 55	5	-376	8717	23.41	2.75	0
232	SLU 56	7	-474	9011	28.41	3.76	0

Nodo	Cont.	Reazione a traslazione			Reazione a rotazione		
Ind.	N.br.	x	y	z	x	y	z
232	SLU 57	6	-420	8956	25.74	3.21	0
232	SLU 58	7	-468	8947	28.09	3.74	0
232	SLU 59	6	-414	8891	25.42	3.19	0
232	SLU 60	6	-495	9015	29.26	3.64	0
232	SLU 61	6	-440	8959	26.58	3.09	0
232	SLU 62	7	-496	9151	29.49	3.72	0
232	SLU 63	6	-442	9096	26.81	3.17	0
232	SLU 64	6	-458	8650	27.3	3.63	0
232	SLU 65	5	-367	8557	22.85	2.72	0
232	SLU 66	7	-465	8851	27.85	3.73	0
232	SLU 67	6	-411	8795	25.18	3.18	0
232	SLU 68	5	-369	8693	23.08	2.8	0
232	SLU 69	7	-466	8987	28.08	3.81	0
232	SLU 70	6	-412	8932	25.41	3.26	0
232	SLU 71	7	-461	8923	27.76	3.79	0
232	SLU 72	6	-406	8867	25.09	3.24	0
232	SLU 73	6	-436	9353	26.63	2.85	0
232	SLU 74	7	-534	9647	31.63	3.86	0
232	SLU 75	6	-479	9591	28.96	3.32	0
232	SLU 76	6	-437	9489	26.86	2.93	0
232	SLU 77	7	-535	9783	31.86	3.94	0
232	SLU 78	6	-481	9728	29.19	3.39	0
232	SLU 79	7	-530	9719	31.55	3.92	0
232	SLU 80	6	-475	9663	28.87	3.38	0
232	SLU 81	7	-556	9787	32.71	3.82	0
232	SLU 82	6	-502	9731	30.03	3.27	0
232	SLU 83	7	-558	9923	32.94	3.9	0
232	SLU 84	6	-503	9868	30.26	3.35	0
232	SLE RA 1	5	-339	6484	20.24	2.75	0
232	SLE RA 2	4	-278	6422	17.27	2.15	0
232	SLE RA 3	5	-343	6618	20.61	2.82	0
232	SLE RA 4	4	-307	6581	18.83	2.45	0
232	SLE RA 5	4	-279	6513	17.43	2.2	0
232	SLE RA 6	5	-344	6709	20.76	2.87	0
232	SLE RA 7	5	-308	6672	18.98	2.51	0
232	SLE RA 8	5	-341	6666	20.55	2.86	0
232	SLE RA 9	5	-304	6629	18.77	2.5	0
232	SLE RA 10	4	-324	6953	19.79	2.23	0
232	SLE RA 11	5	-389	7149	23.13	2.91	0
232	SLE RA 12	5	-353	7112	21.35	2.54	0
232	SLE RA 13	4	-325	7044	19.95	2.29	0
232	SLE RA 14	5	-390	7240	23.28	2.96	0
232	SLE RA 15	5	-354	7203	21.5	2.6	0
232	SLE RA 16	5	-387	7197	23.07	2.95	0
232	SLE RA 17	5	-350	7159	21.29	2.58	0
232	SLE RA 18	5	-404	7242	23.85	2.88	0
232	SLE RA 19	5	-368	7205	22.06	2.51	0
232	SLE RA 20	5	-405	7333	24	2.93	0
232	SLE RA 21	5	-369	7296	22.22	2.57	0
232	SLE FR 1	5	-339	6484	20.24	2.75	0
232	SLE FR 2	5	-326	6472	19.65	2.63	0
232	SLE FR 3	5	-339	6520	20.3	2.78	0
232	SLE FR 4	5	-346	6699	20.73	2.67	0
232	SLE FR 5	5	-359	6748	21.38	2.81	0
232	SLE FR 6	5	-371	6863	22.04	2.82	0
232	SLE QP 1	5	-339	6484	20.24	2.75	0
232	SLE QP 2	5	-358	6711	21.32	2.79	0
232	SLD 1	3	-34	4963	4.72	15.37	-0.02
232	SLD 2	3	-34	4963	4.72	15.37	-0.02
232	SLD 3	-5	-426	5142	23.6	10.71	-0.02
232	SLD 4	-5	-426	5142	23.6	10.71	-0.02
232	SLD 5	16	334	5914	-12.29	13.64	0
232	SLD 6	16	334	5914	-12.29	13.64	0
232	SLD 7	-10	-973	6513	50.64	-1.91	-0.01
232	SLD 8	-10	-973	6513	50.64	-1.91	-0.01
232	SLD 9	20	257	6910	-7.99	7.49	0.01
232	SLD 10	20	257	6910	-7.99	7.49	0.01
232	SLD 11	-7	-1050	7508	54.94	-8.06	0
232	SLD 12	-7	-1050	7508	54.94	-8.06	0
232	SLD 13	15	-290	8281	19.05	-5.12	0.02
232	SLD 14	15	-290	8281	19.05	-5.12	0.02
232	SLD 15	7	-682	8460	37.93	-9.79	0.02
232	SLD 16	7	-682	8460	37.93	-9.79	0.02
232	SLV 1	0	400	2613	-17.55	33.24	-0.04
232	SLV 2	0	400	2613	-17.55	33.24	-0.04
232	SLV 3	-20	-515	3043	26.53	21.61	-0.05
232	SLV 4	-20	-515	3043	26.53	21.61	-0.05
232	SLV 5	34	1258	4830	-57.2	29.57	0
232	SLV 6	34	1258	4830	-57.2	29.57	0
232	SLV 7	-33	-1794	6263	89.75	-9.21	-0.03
232	SLV 8	-33	-1794	6263	89.75	-9.21	-0.03
232	SLV 9	43	1077	7160	-47.1	14.79	0.03
232	SLV 10	43	1077	7160	-47.1	14.79	0.03
232	SLV 11	-24	-1974	8593	99.84	-23.99	0
232	SLV 12	-24	-1974	8593	99.84	-23.99	0
232	SLV 13	30	-201	10380	16.11	-16.02	0.05
232	SLV 14	30	-201	10380	16.11	-16.02	0.05
232	SLV 15	10	-1117	10809	60.2	-27.66	0.04
232	SLV 16	10	-1117	10809	60.2	-27.66	0.04
233	SLU 1	0	846	3407	-11.73	-0.33	0.05

Nodo	Cont.	Reazione a traslazione			Reazione a rotazione		
Ind.	N.br.	x	y	z	x	y	z
233	SLU 2	0	834	3360	-11.5	-0.31	0.05
233	SLU 3	0	875	3530	-12.01	-0.34	0.06
233	SLU 4	0	868	3501	-11.87	-0.33	0.05
233	SLU 5	0	852	3439	-11.64	-0.32	0.05
233	SLU 6	0	893	3609	-12.15	-0.35	0.06
233	SLU 7	0	886	3580	-12.01	-0.34	0.06
233	SLU 8	0	882	3565	-12.01	-0.35	0.06
233	SLU 9	0	875	3537	-11.88	-0.34	0.06
233	SLU 10	0	960	3885	-12.77	-0.36	0.06
233	SLU 11	0	1001	4055	-13.28	-0.39	0.07
233	SLU 12	0	994	4027	-13.14	-0.38	0.06
233	SLU 13	0	978	3964	-12.91	-0.37	0.06
233	SLU 14	0	1019	4134	-13.42	-0.4	0.07
233	SLU 15	0	1012	4106	-13.28	-0.39	0.07
233	SLU 16	0	1008	4090	-13.28	-0.4	0.07
233	SLU 17	0	1001	4062	-13.15	-0.39	0.06
233	SLU 18	0	1026	4158	-13.54	-0.4	0.07
233	SLU 19	0	1019	4129	-13.4	-0.39	0.07
233	SLU 20	0	1044	4237	-13.68	-0.41	0.07
233	SLU 21	0	1037	4208	-13.55	-0.4	0.07
233	SLU 22	0	970	3922	-13.03	-0.38	0.06
233	SLU 23	0	958	3875	-12.8	-0.36	0.06
233	SLU 24	0	999	4045	-13.31	-0.39	0.07
233	SLU 25	0	991	4016	-13.17	-0.38	0.06
233	SLU 26	0	976	3954	-12.95	-0.37	0.06
233	SLU 27	0	1017	4124	-13.45	-0.4	0.07
233	SLU 28	0	1009	4095	-13.32	-0.39	0.07
233	SLU 29	0	1006	4080	-13.32	-0.4	0.07
233	SLU 30	0	999	4052	-13.18	-0.39	0.06
233	SLU 31	0	1084	4400	-14.07	-0.42	0.07
233	SLU 32	0	1125	4570	-14.58	-0.45	0.07
233	SLU 33	0	1117	4542	-14.44	-0.44	0.07
233	SLU 34	0	1102	4479	-14.22	-0.42	0.07
233	SLU 35	0	1143	4649	-14.72	-0.46	0.08
233	SLU 36	0	1135	4621	-14.59	-0.45	0.07
233	SLU 37	0	1132	4605	-14.58	-0.45	0.07
233	SLU 38	0	1125	4577	-14.45	-0.44	0.07
233	SLU 39	0	1150	4673	-14.84	-0.45	0.08
233	SLU 40	0	1143	4644	-14.71	-0.44	0.07
233	SLU 41	0	1168	4752	-14.98	-0.46	0.08
233	SLU 42	0	1161	4723	-14.85	-0.45	0.08
233	SLU 43	0	1058	4253	-14.8	-0.41	0.07
233	SLU 44	0	1046	4205	-14.57	-0.39	0.06
233	SLU 45	0	1086	4375	-15.08	-0.42	0.07
233	SLU 46	0	1079	4347	-14.94	-0.41	0.07
233	SLU 47	0	1064	4284	-14.72	-0.4	0.07
233	SLU 48	0	1104	4454	-15.22	-0.43	0.07
233	SLU 49	0	1097	4426	-15.09	-0.42	0.07
233	SLU 50	0	1094	4411	-15.08	-0.42	0.07
233	SLU 51	0	1086	4382	-14.95	-0.42	0.07
233	SLU 52	0	1172	4731	-15.84	-0.44	0.07
233	SLU 53	0	1212	4901	-16.35	-0.47	0.08
233	SLU 54	0	1205	4872	-16.21	-0.46	0.08
233	SLU 55	0	1190	4810	-15.98	-0.45	0.08
233	SLU 56	0	1230	4980	-16.49	-0.48	0.08
233	SLU 57	0	1223	4951	-16.35	-0.47	0.08
233	SLU 58	0	1220	4936	-16.35	-0.48	0.08
233	SLU 59	0	1212	4908	-16.22	-0.47	0.08
233	SLU 60	0	1238	5003	-16.61	-0.48	0.08
233	SLU 61	0	1231	4975	-16.48	-0.47	0.08
233	SLU 62	0	1256	5082	-16.75	-0.49	0.08
233	SLU 63	0	1248	5054	-16.62	-0.48	0.08
233	SLU 64	0	1182	4768	-16.1	-0.46	0.08
233	SLU 65	0	1169	4720	-15.88	-0.44	0.07
233	SLU 66	0	1210	4890	-16.38	-0.47	0.08
233	SLU 67	0	1203	4862	-16.25	-0.46	0.08
233	SLU 68	0	1187	4799	-16.02	-0.45	0.08
233	SLU 69	0	1228	4969	-16.52	-0.48	0.08
233	SLU 70	0	1221	4941	-16.39	-0.47	0.08
233	SLU 71	0	1217	4926	-16.39	-0.48	0.08
233	SLU 72	0	1210	4897	-16.25	-0.47	0.08
233	SLU 73	0	1295	5246	-17.14	-0.5	0.08
233	SLU 74	0	1336	5416	-17.65	-0.53	0.09
233	SLU 75	0	1329	5387	-17.51	-0.52	0.09
233	SLU 76	0	1313	5325	-17.29	-0.5	0.08
233	SLU 77	0	1354	5495	-17.79	-0.54	0.09
233	SLU 78	0	1347	5466	-17.66	-0.53	0.09
233	SLU 79	0	1343	5451	-17.65	-0.53	0.09
233	SLU 80	0	1336	5423	-17.52	-0.52	0.09
233	SLU 81	0	1362	5518	-17.91	-0.53	0.09
233	SLU 82	0	1354	5490	-17.78	-0.52	0.09
233	SLU 83	0	1379	5597	-18.06	-0.54	0.09
233	SLU 84	0	1372	5569	-17.92	-0.53	0.09
233	SLE RA 1	0	882	3554	-12.1	-0.34	0.06
233	SLE RA 2	0	874	3523	-11.95	-0.33	0.05
233	SLE RA 3	0	901	3636	-12.29	-0.35	0.06
233	SLE RA 4	0	896	3617	-12.2	-0.34	0.06
233	SLE RA 5	0	886	3575	-12.04	-0.34	0.06
233	SLE RA 6	0	913	3689	-12.38	-0.36	0.06
233	SLE RA 7	0	908	3670	-12.29	-0.35	0.06

Nodo	Cont.	Reazione a traslazione			Reazione a rotazione		
Ind.	N.br.	x	y	z	x	y	z
233	SLE RA 8	0	905	3660	-12.29	-0.35	0.06
233	SLE RA 9	0	901	3641	-12.2	-0.35	0.06
233	SLE RA 10	0	958	3873	-12.79	-0.37	0.06
233	SLE RA 11	0	985	3986	-13.13	-0.39	0.06
233	SLE RA 12	0	980	3967	-13.04	-0.38	0.06
233	SLE RA 13	0	970	3926	-12.89	-0.37	0.06
233	SLE RA 14	0	997	4039	-13.23	-0.39	0.07
233	SLE RA 15	0	992	4020	-13.14	-0.39	0.06
233	SLE RA 16	0	989	4010	-13.14	-0.39	0.06
233	SLE RA 17	0	985	3991	-13.04	-0.38	0.06
233	SLE RA 18	0	1002	4055	-13.31	-0.39	0.07
233	SLE RA 19	0	997	4036	-13.22	-0.38	0.06
233	SLE RA 20	0	1014	4107	-13.4	-0.4	0.07
233	SLE RA 21	0	1009	4088	-13.31	-0.39	0.07
233	SLE FR 1	0	882	3554	-12.1	-0.34	0.06
233	SLE FR 2	0	880	3548	-12.07	-0.34	0.06
233	SLE FR 3	0	886	3575	-12.14	-0.34	0.06
233	SLE FR 4	0	916	3698	-12.43	-0.35	0.06
233	SLE FR 5	0	922	3726	-12.5	-0.36	0.06
233	SLE FR 6	0	942	3805	-12.7	-0.37	0.06
233	SLE QP 1	0	882	3554	-12.1	-0.34	0.06
233	SLE QP 2	0	918	3705	-12.46	-0.36	0.06
233	SLD 1	-7	960	3805	-21.22	6.07	-1.01
233	SLD 2	-7	960	3805	-21.22	6.07	-1.01
233	SLD 3	-4	670	2919	-11.61	7.67	-1.29
233	SLD 4	-4	670	2919	-11.61	7.67	-1.29
233	SLD 5	-6	1369	5078	-29.67	-0.87	0.16
233	SLD 6	-6	1369	5078	-29.67	-0.87	0.16
233	SLD 7	3	404	2125	2.37	4.49	-0.76
233	SLD 8	3	404	2125	2.37	4.49	-0.76
233	SLD 9	-3	1431	5284	-27.29	-5.2	0.88
233	SLD 10	-3	1431	5284	-27.29	-5.2	0.88
233	SLD 11	6	466	2331	4.74	0.16	-0.04
233	SLD 12	6	466	2331	4.74	0.16	-0.04
233	SLD 13	4	1165	4490	-13.31	-8.39	1.4
233	SLD 14	4	1165	4490	-13.31	-8.39	1.4
233	SLD 15	7	876	3604	-3.7	-6.78	1.13
233	SLD 16	7	876	3604	-3.7	-6.78	1.13
233	SLV 1	-17	1018	3945	-33.32	16.14	-2.69
233	SLV 2	-17	1018	3945	-33.32	16.14	-2.69
233	SLV 3	-10	326	1828	-10.39	20.18	-3.38
233	SLV 4	-10	326	1828	-10.39	20.18	-3.38
233	SLV 5	-15	1997	6988	-53.51	-1.53	0.28
233	SLV 6	-15	1997	6988	-53.51	-1.53	0.28
233	SLV 7	8	-309	-69	22.95	11.92	-2.02
233	SLV 8	8	-309	-69	22.95	11.92	-2.02
233	SLV 9	-7	2144	7478	-47.87	-12.64	2.14
233	SLV 10	-7	2144	7478	-47.87	-12.64	2.14
233	SLV 11	16	-161	421	28.58	0.81	-0.17
233	SLV 12	16	-161	421	28.58	0.81	-0.17
233	SLV 13	10	1509	5581	-14.54	-20.89	3.5
233	SLV 14	10	1509	5581	-14.54	-20.89	3.5
233	SLV 15	17	817	3464	8.4	-16.85	2.81
233	SLV 16	17	817	3464	8.4	-16.85	2.81
234	SLU 1	4	657	2165	-19.34	1.34	-0.28
234	SLU 2	4	656	2162	-19.33	1.34	-0.27
234	SLU 3	4	678	2235	-19.97	1.39	-0.29
234	SLU 4	4	678	2233	-19.97	1.39	-0.29
234	SLU 5	4	669	2205	-19.73	1.36	-0.28
234	SLU 6	4	691	2277	-20.37	1.42	-0.29
234	SLU 7	4	691	2275	-20.36	1.42	-0.29
234	SLU 8	4	683	2250	-20.13	1.4	-0.29
234	SLU 9	4	683	2248	-20.13	1.39	-0.29
234	SLU 10	4	757	2495	-22.23	1.6	-0.33
234	SLU 11	4	779	2568	-22.86	1.65	-0.34
234	SLU 12	4	779	2566	-22.86	1.65	-0.34
234	SLU 13	4	770	2538	-22.62	1.62	-0.33
234	SLU 14	4	792	2610	-23.26	1.68	-0.35
234	SLU 15	4	792	2608	-23.26	1.68	-0.34
234	SLU 16	4	784	2583	-23.03	1.66	-0.34
234	SLU 17	4	783	2581	-23.02	1.65	-0.34
234	SLU 18	4	801	2641	-23.47	1.71	-0.35
234	SLU 19	4	801	2639	-23.47	1.71	-0.35
234	SLU 20	5	814	2683	-23.87	1.74	-0.36
234	SLU 21	5	814	2682	-23.87	1.74	-0.36
234	SLU 22	4	753	2482	-22.12	1.58	-0.33
234	SLU 23	4	752	2479	-22.11	1.58	-0.33
234	SLU 24	4	774	2551	-22.75	1.64	-0.34
234	SLU 25	4	774	2550	-22.75	1.63	-0.34
234	SLU 26	4	765	2522	-22.51	1.61	-0.33
234	SLU 27	4	787	2594	-23.15	1.66	-0.34
234	SLU 28	4	787	2592	-23.14	1.66	-0.34
234	SLU 29	4	779	2567	-22.91	1.64	-0.34
234	SLU 30	4	779	2565	-22.91	1.64	-0.34
234	SLU 31	5	853	2812	-25.01	1.84	-0.38
234	SLU 32	5	875	2884	-25.64	1.89	-0.39
234	SLU 33	5	875	2883	-25.64	1.89	-0.39
234	SLU 34	5	866	2855	-25.4	1.87	-0.38
234	SLU 35	5	888	2927	-26.04	1.92	-0.4
234	SLU 36	5	888	2925	-26.04	1.92	-0.39

Nodo	Cont.	Reazione a traslazione			Reazione a rotazione		
Ind.	N.br.	x	y	z	x	y	z
234	SLU 37	5	880	2900	-25.81	1.9	-0.39
234	SLU 38	5	879	2898	-25.8	1.9	-0.39
234	SLU 39	5	897	2958	-26.25	1.95	-0.4
234	SLU 40	5	897	2956	-26.25	1.95	-0.4
234	SLU 41	5	910	3000	-26.65	1.98	-0.41
234	SLU 42	5	910	2998	-26.65	1.98	-0.41
234	SLU 43	4	821	2706	-24.19	1.66	-0.34
234	SLU 44	4	821	2703	-24.18	1.65	-0.34
234	SLU 45	5	842	2776	-24.82	1.71	-0.35
234	SLU 46	5	842	2774	-24.81	1.71	-0.35
234	SLU 47	4	834	2746	-24.58	1.68	-0.35
234	SLU 48	5	855	2818	-25.22	1.74	-0.36
234	SLU 49	5	855	2816	-25.21	1.73	-0.36
234	SLU 50	5	847	2791	-24.98	1.71	-0.35
234	SLU 51	5	847	2789	-24.98	1.71	-0.35
234	SLU 52	5	921	3036	-27.07	1.91	-0.39
234	SLU 53	5	943	3109	-27.71	1.97	-0.4
234	SLU 54	5	943	3107	-27.71	1.96	-0.4
234	SLU 55	5	934	3079	-27.47	1.94	-0.4
234	SLU 56	5	956	3151	-28.11	2	-0.41
234	SLU 57	5	956	3149	-28.11	1.99	-0.41
234	SLU 58	5	948	3124	-27.88	1.97	-0.41
234	SLU 59	5	948	3122	-27.87	1.97	-0.41
234	SLU 60	5	965	3182	-28.32	2.03	-0.42
234	SLU 61	5	965	3180	-28.32	2.02	-0.42
234	SLU 62	5	978	3224	-28.72	2.06	-0.42
234	SLU 63	5	978	3223	-28.71	2.05	-0.42
234	SLU 64	5	917	3023	-26.97	1.9	-0.39
234	SLU 65	5	917	3020	-26.96	1.9	-0.39
234	SLU 66	5	938	3092	-27.6	1.95	-0.4
234	SLU 67	5	938	3091	-27.59	1.95	-0.4
234	SLU 68	5	930	3063	-27.36	1.93	-0.4
234	SLU 69	5	951	3135	-28	1.98	-0.41
234	SLU 70	5	951	3133	-27.99	1.98	-0.41
234	SLU 71	5	943	3108	-27.76	1.96	-0.4
234	SLU 72	5	943	3106	-27.76	1.96	-0.4
234	SLU 73	6	1017	3353	-29.85	2.16	-0.44
234	SLU 74	6	1039	3425	-30.49	2.21	-0.45
234	SLU 75	6	1039	3424	-30.49	2.21	-0.45
234	SLU 76	6	1030	3396	-30.25	2.19	-0.45
234	SLU 77	6	1052	3468	-30.89	2.24	-0.46
234	SLU 78	6	1052	3466	-30.89	2.24	-0.46
234	SLU 79	6	1044	3441	-30.66	2.22	-0.46
234	SLU 80	6	1044	3439	-30.65	2.22	-0.46
234	SLU 81	6	1061	3499	-31.1	2.27	-0.47
234	SLU 82	6	1061	3497	-31.1	2.27	-0.47
234	SLU 83	6	1074	3541	-31.5	2.3	-0.47
234	SLU 84	6	1074	3539	-31.49	2.3	-0.47
234	SLE RA 1	4	684	2256	-20.13	1.41	-0.29
234	SLE RA 2	4	684	2254	-20.13	1.41	-0.29
234	SLE RA 3	4	699	2302	-20.55	1.44	-0.3
234	SLE RA 4	4	698	2301	-20.55	1.44	-0.3
234	SLE RA 5	4	693	2282	-20.39	1.43	-0.29
234	SLE RA 6	4	707	2330	-20.82	1.46	-0.3
234	SLE RA 7	4	707	2329	-20.82	1.46	-0.3
234	SLE RA 8	4	702	2312	-20.66	1.45	-0.3
234	SLE RA 9	4	701	2311	-20.66	1.45	-0.3
234	SLE RA 10	4	751	2476	-22.06	1.58	-0.32
234	SLE RA 11	4	766	2524	-22.48	1.62	-0.33
234	SLE RA 12	4	766	2523	-22.48	1.61	-0.33
234	SLE RA 13	4	760	2504	-22.32	1.6	-0.33
234	SLE RA 14	4	774	2552	-22.75	1.64	-0.34
234	SLE RA 15	4	774	2551	-22.75	1.63	-0.34
234	SLE RA 16	4	769	2534	-22.59	1.62	-0.33
234	SLE RA 17	4	769	2533	-22.59	1.62	-0.33
234	SLE RA 18	4	781	2573	-22.89	1.66	-0.34
234	SLE RA 19	4	780	2572	-22.88	1.65	-0.34
234	SLE RA 20	4	789	2601	-23.15	1.68	-0.34
234	SLE RA 21	4	789	2600	-23.15	1.67	-0.34
234	SLE FR 1	4	684	2256	-20.13	1.41	-0.29
234	SLE FR 2	4	684	2255	-20.13	1.41	-0.29
234	SLE FR 3	4	688	2267	-20.24	1.42	-0.29
234	SLE FR 4	4	713	2351	-20.96	1.48	-0.3
234	SLE FR 5	4	717	2362	-21.06	1.49	-0.31
234	SLE FR 6	4	733	2414	-21.51	1.53	-0.32
234	SLE QP 1	4	684	2256	-20.13	1.41	-0.29
234	SLE QP 2	4	713	2351	-20.96	1.48	-0.31
234	SLD 1	21	945	3089	-27.33	6.55	-1.35
234	SLD 2	21	945	3089	-27.33	6.55	-1.35
234	SLD 3	12	667	2236	-19.44	3.88	-0.81
234	SLD 4	12	667	2236	-19.44	3.88	-0.81
234	SLD 5	22	1204	3866	-34.84	7.05	-1.45
234	SLD 6	22	1204	3866	-34.84	7.05	-1.45
234	SLD 7	-7	278	1023	-8.54	-1.85	0.38
234	SLD 8	-7	278	1023	-8.54	-1.85	0.38
234	SLD 9	14	1149	3679	-33.38	4.81	-0.99
234	SLD 10	14	1149	3679	-33.38	4.81	-0.99
234	SLD 11	-14	223	836	-7.08	-4.09	0.84
234	SLD 12	-14	223	836	-7.08	-4.09	0.84
234	SLD 13	-4	760	2466	-22.47	-0.92	0.2

Nodo	Cont.	Reazione a traslazione			Reazione a rotazione		
Ind.	N.br.	x	y	z	x	y	z
234	SLD 14	-4	760	2466	-22.47	-0.92	0.2
234	SLD 15	-13	482	1613	-14.58	-3.59	0.74
234	SLD 16	-13	482	1613	-14.58	-3.59	0.74
234	SLV 1	44	1267	4114	-36.19	13.51	-2.79
234	SLV 2	44	1267	4114	-36.19	13.51	-2.79
234	SLV 3	23	597	2058	-17.22	6.96	-1.45
234	SLV 4	23	597	2058	-17.22	6.96	-1.45
234	SLV 5	48	1894	5997	-54.3	15.03	-3.09
234	SLV 6	48	1894	5997	-54.3	15.03	-3.09
234	SLV 7	-22	-336	-854	8.94	-6.81	1.4
234	SLV 8	-22	-336	-854	8.94	-6.81	1.4
234	SLV 9	30	1763	5556	-50.85	9.78	-2.01
234	SLV 10	30	1763	5556	-50.85	9.78	-2.01
234	SLV 11	-40	-468	-1295	12.39	-12.06	2.48
234	SLV 12	-40	-468	-1295	12.39	-12.06	2.48
234	SLV 13	-15	829	2644	-24.7	-3.99	0.84
234	SLV 14	-15	829	2644	-24.7	-3.99	0.84
234	SLV 15	-36	160	588	-5.73	-10.54	2.18
234	SLV 16	-36	160	588	-5.73	-10.54	2.18
235	SLU 1	53	277	2521	-29.01	38.72	0.19
235	SLU 2	53	270	2477	-28.43	38.26	0.18
235	SLU 3	56	284	2593	-30.08	40.39	0.2
235	SLU 4	55	281	2567	-29.73	40.12	0.19
235	SLU 5	54	275	2526	-29.15	39.42	0.19
235	SLU 6	57	289	2641	-30.79	41.55	0.2
235	SLU 7	57	285	2615	-30.45	41.27	0.2
235	SLU 8	57	286	2617	-30.44	41.03	0.2
235	SLU 9	56	282	2591	-30.09	40.76	0.2
235	SLU 10	62	303	2768	-32.5	44.86	0.22
235	SLU 11	65	317	2883	-34.14	46.99	0.23
235	SLU 12	64	313	2857	-33.8	46.71	0.23
235	SLU 13	63	307	2816	-33.21	46.01	0.22
235	SLU 14	66	321	2932	-34.86	48.14	0.23
235	SLU 15	66	318	2906	-34.51	47.86	0.23
235	SLU 16	66	319	2907	-34.5	47.63	0.23
235	SLU 17	65	315	2882	-34.15	47.35	0.23
235	SLU 18	66	323	2935	-34.81	48.14	0.23
235	SLU 19	66	319	2909	-34.47	47.87	0.23
235	SLU 20	68	328	2984	-35.53	49.3	0.24
235	SLU 21	68	324	2958	-35.18	49.02	0.24
235	SLU 22	62	309	2810	-33.09	45.21	0.22
235	SLU 23	62	303	2766	-32.51	44.75	0.22
235	SLU 24	65	317	2882	-34.16	46.88	0.23
235	SLU 25	64	313	2856	-33.82	46.61	0.23
235	SLU 26	63	307	2815	-33.23	45.91	0.22
235	SLU 27	66	321	2930	-34.87	48.04	0.23
235	SLU 28	66	318	2904	-34.53	47.76	0.23
235	SLU 29	65	319	2906	-34.52	47.52	0.23
235	SLU 30	65	315	2880	-34.17	47.25	0.23
235	SLU 31	71	335	3057	-36.58	51.34	0.25
235	SLU 32	74	349	3172	-38.23	53.47	0.26
235	SLU 33	73	345	3146	-37.88	53.2	0.26
235	SLU 34	72	340	3105	-37.29	52.5	0.25
235	SLU 35	75	354	3221	-38.94	54.63	0.26
235	SLU 36	75	350	3195	-38.59	54.35	0.26
235	SLU 37	75	351	3196	-38.58	54.11	0.26
235	SLU 38	74	347	3170	-38.23	53.84	0.26
235	SLU 39	75	355	3224	-38.9	54.63	0.26
235	SLU 40	75	351	3198	-38.55	54.35	0.26
235	SLU 41	77	360	3273	-39.61	55.78	0.27
235	SLU 42	76	356	3247	-39.26	55.51	0.27
235	SLU 43	66	349	3178	-36.31	48.12	0.23
235	SLU 44	66	342	3135	-35.74	47.66	0.23
235	SLU 45	69	356	3250	-37.38	49.79	0.24
235	SLU 46	68	352	3224	-37.04	49.51	0.24
235	SLU 47	67	347	3183	-36.45	48.81	0.24
235	SLU 48	70	361	3299	-38.1	50.94	0.25
235	SLU 49	70	357	3273	-37.75	50.66	0.24
235	SLU 50	69	358	3274	-37.74	50.43	0.24
235	SLU 51	69	354	3248	-37.39	50.15	0.24
235	SLU 52	75	374	3425	-39.8	54.25	0.26
235	SLU 53	78	389	3541	-41.45	56.38	0.27
235	SLU 54	77	385	3515	-41.1	56.1	0.27
235	SLU 55	76	379	3473	-40.51	55.4	0.27
235	SLU 56	79	393	3589	-42.16	57.53	0.28
235	SLU 57	79	390	3563	-41.81	57.26	0.28
235	SLU 58	79	390	3565	-41.8	57.02	0.28
235	SLU 59	78	387	3539	-41.46	56.74	0.27
235	SLU 60	79	395	3592	-42.12	57.53	0.28
235	SLU 61	79	391	3567	-41.77	57.26	0.28
235	SLU 62	81	400	3641	-42.83	58.69	0.28
235	SLU 63	80	396	3615	-42.49	58.41	0.28
235	SLU 64	75	381	3467	-40.39	54.61	0.26
235	SLU 65	75	375	3424	-39.82	54.15	0.26
235	SLU 66	78	389	3539	-41.46	56.27	0.27
235	SLU 67	77	385	3513	-41.12	56	0.27
235	SLU 68	76	379	3472	-40.53	55.3	0.27
235	SLU 69	79	393	3587	-42.18	57.43	0.28
235	SLU 70	79	390	3562	-41.83	57.15	0.28
235	SLU 71	78	391	3563	-41.82	56.91	0.27

Nodo	Cont.	Reazione a traslazione			Reazione a rotazione		
Ind.	N.br.	x	y	z	x	y	z
235	SLU 72	78	387	3537	-41.47	56.64	0.27
235	SLU 73	84	407	3714	-43.88	60.74	0.29
235	SLU 74	87	421	3829	-45.53	62.87	0.3
235	SLU 75	86	417	3804	-45.18	62.59	0.3
235	SLU 76	85	412	3762	-44.59	61.89	0.3
235	SLU 77	88	426	3878	-46.24	64.02	0.31
235	SLU 78	88	422	3852	-45.9	63.74	0.31
235	SLU 79	87	423	3854	-45.88	63.51	0.31
235	SLU 80	87	419	3828	-45.54	63.23	0.31
235	SLU 81	88	427	3881	-46.2	64.02	0.31
235	SLU 82	88	423	3855	-45.85	63.75	0.31
235	SLU 83	90	432	3930	-46.91	65.18	0.32
235	SLU 84	89	428	3904	-46.57	64.9	0.31
235	SLE RA 1	56	286	2603	-30.18	40.58	0.2
235	SLE RA 2	55	282	2574	-29.79	40.27	0.19
235	SLE RA 3	57	291	2652	-30.89	41.69	0.2
235	SLE RA 4	57	289	2634	-30.66	41.51	0.2
235	SLE RA 5	57	285	2607	-30.27	41.04	0.2
235	SLE RA 6	59	294	2684	-31.36	42.46	0.21
235	SLE RA 7	58	292	2666	-31.13	42.28	0.2
235	SLE RA 8	58	292	2668	-31.13	42.12	0.2
235	SLE RA 9	58	290	2650	-30.9	41.93	0.2
235	SLE RA 10	62	303	2768	-32.5	44.67	0.22
235	SLE RA 11	63	313	2845	-33.6	46.09	0.22
235	SLE RA 12	63	310	2828	-33.37	45.9	0.22
235	SLE RA 13	63	306	2800	-32.98	45.44	0.22
235	SLE RA 14	65	316	2877	-34.07	46.86	0.23
235	SLE RA 15	64	313	2860	-33.84	46.67	0.23
235	SLE RA 16	64	314	2861	-33.84	46.51	0.22
235	SLE RA 17	64	311	2844	-33.6	46.33	0.22
235	SLE RA 18	65	317	2880	-34.05	46.86	0.23
235	SLE RA 19	64	314	2862	-33.82	46.67	0.23
235	SLE RA 20	66	320	2912	-34.52	47.63	0.23
235	SLE RA 21	65	317	2895	-34.29	47.44	0.23
235	SLE FR 1	56	286	2603	-30.18	40.58	0.2
235	SLE FR 2	56	285	2597	-30.1	40.52	0.2
235	SLE FR 3	56	287	2616	-30.37	40.89	0.2
235	SLE FR 4	58	294	2680	-31.26	42.4	0.2
235	SLE FR 5	59	296	2699	-31.53	42.77	0.21
235	SLE FR 6	60	301	2741	-32.11	43.72	0.21
235	SLE QP 1	56	286	2603	-30.18	40.58	0.2
235	SLE QP 2	59	295	2686	-31.34	42.46	0.21
235	SLD 1	76	356	3881	-49.93	55.9	0.27
235	SLD 2	76	356	3881	-49.93	55.9	0.27
235	SLD 3	83	-38	2510	-26.37	60.97	0.29
235	SLD 4	83	-38	2510	-26.37	60.97	0.29
235	SLD 5	54	911	5123	-72.64	38.8	0.19
235	SLD 6	54	911	5123	-72.64	38.8	0.19
235	SLD 7	76	-402	555	5.88	55.71	0.27
235	SLD 8	76	-402	555	5.88	55.71	0.27
235	SLD 9	41	992	4817	-68.55	29.21	0.14
235	SLD 10	41	992	4817	-68.55	29.21	0.14
235	SLD 11	63	-320	249	9.97	46.13	0.22
235	SLD 12	63	-320	249	9.97	46.13	0.22
235	SLD 13	34	628	2862	-36.3	23.95	0.12
235	SLD 14	34	628	2862	-36.3	23.95	0.12
235	SLD 15	41	235	1492	-12.74	29.03	0.14
235	SLD 16	41	235	1492	-12.74	29.03	0.14
235	SLV 1	100	440	5554	-76.07	73.85	0.35
235	SLV 2	100	440	5554	-76.07	73.85	0.35
235	SLV 3	117	-504	2271	-19.59	85.95	0.41
235	SLV 4	117	-504	2271	-19.59	85.95	0.41
235	SLV 5	46	1771	8526	-130.42	33.53	0.16
235	SLV 6	46	1771	8526	-130.42	33.53	0.16
235	SLV 7	101	-1376	-2418	57.85	73.86	0.35
235	SLV 8	101	-1376	-2418	57.85	73.86	0.35
235	SLV 9	16	1967	7790	-120.53	11.06	0.06
235	SLV 10	16	1967	7790	-120.53	11.06	0.06
235	SLV 11	71	-1180	-3153	67.75	51.4	0.25
235	SLV 12	71	-1180	-3153	67.75	51.4	0.25
235	SLV 13	0	1094	3101	-43.08	-1.03	0
235	SLV 14	0	1094	3101	-43.08	-1.03	0
235	SLV 15	17	150	-182	13.4	11.07	0.06
235	SLV 16	17	150	-182	13.4	11.07	0.06
236	SLU 1	0	388	4451	-24.88	0.37	0
236	SLU 2	0	388	4443	-24.89	0.36	0
236	SLU 3	0	400	4620	-25.74	0.4	0
236	SLU 4	0	400	4615	-25.74	0.39	0
236	SLU 5	0	396	4557	-25.46	0.39	0
236	SLU 6	0	408	4733	-26.3	0.42	0
236	SLU 7	0	408	4729	-26.31	0.42	0
236	SLU 8	0	404	4679	-26.02	0.41	0
236	SLU 9	0	404	4674	-26.02	0.41	0
236	SLU 10	0	447	5167	-28.74	0.45	0
236	SLU 11	0	458	5343	-29.58	0.49	0
236	SLU 12	0	459	5338	-29.59	0.48	0
236	SLU 13	0	455	5280	-29.31	0.48	0
236	SLU 14	0	466	5457	-30.15	0.51	0
236	SLU 15	0	467	5452	-30.16	0.51	0
236	SLU 16	0	462	5402	-29.86	0.5	0

Nodo	Cont.	Reazione a traslazione			Reazione a rotazione		
Ind.	N.br.	x	y	z	x	y	z
236	SLU 17	0	462	5397	-29.87	0.5	0
236	SLU 18	0	471	5484	-30.38	0.5	0
236	SLU 19	0	472	5480	-30.38	0.49	0
236	SLU 20	0	479	5598	-30.95	0.52	0
236	SLU 21	0	480	5594	-30.95	0.52	0
236	SLU 22	0	443	5141	-28.56	0.46	0
236	SLU 23	0	444	5134	-28.57	0.45	0
236	SLU 24	0	455	5310	-29.41	0.49	0
236	SLU 25	0	456	5305	-29.42	0.48	0
236	SLU 26	0	452	5247	-29.14	0.47	0
236	SLU 27	0	463	5424	-29.98	0.51	0
236	SLU 28	0	464	5419	-29.99	0.51	0
236	SLU 29	0	459	5369	-29.7	0.5	0
236	SLU 30	0	459	5364	-29.7	0.5	0
236	SLU 31	0	502	5857	-32.42	0.54	0
236	SLU 32	0	514	6034	-33.26	0.58	0
236	SLU 33	0	514	6029	-33.26	0.57	0
236	SLU 34	0	510	5971	-32.98	0.56	0
236	SLU 35	0	522	6147	-33.83	0.6	0
236	SLU 36	0	522	6143	-33.83	0.6	0
236	SLU 37	0	517	6093	-33.54	0.59	0
236	SLU 38	0	518	6088	-33.55	0.59	0
236	SLU 39	0	527	6175	-34.05	0.59	0
236	SLU 40	0	527	6170	-34.06	0.58	0
236	SLU 41	0	535	6289	-34.62	0.61	0
236	SLU 42	0	535	6284	-34.63	0.61	0
236	SLU 43	0	485	5549	-31.09	0.45	0
236	SLU 44	0	486	5542	-31.1	0.44	0
236	SLU 45	0	497	5718	-31.94	0.48	0
236	SLU 46	0	498	5713	-31.95	0.47	0
236	SLU 47	0	494	5655	-31.67	0.47	0
236	SLU 48	0	505	5832	-32.51	0.5	0
236	SLU 49	0	506	5827	-32.51	0.5	0
236	SLU 50	0	501	5777	-32.22	0.5	0
236	SLU 51	0	501	5772	-32.23	0.49	0
236	SLU 52	0	544	6265	-34.94	0.53	0
236	SLU 53	0	556	6442	-35.79	0.57	0
236	SLU 54	0	556	6437	-35.79	0.56	0
236	SLU 55	0	552	6379	-35.51	0.56	0
236	SLU 56	0	564	6555	-36.36	0.59	0
236	SLU 57	0	564	6551	-36.36	0.59	0
236	SLU 58	0	559	6501	-36.07	0.58	0
236	SLU 59	0	560	6496	-36.07	0.58	0
236	SLU 60	0	569	6583	-36.58	0.58	0
236	SLU 61	0	569	6578	-36.59	0.57	0
236	SLU 62	0	577	6697	-37.15	0.6	0
236	SLU 63	0	577	6692	-37.16	0.6	0
236	SLU 64	0	541	6240	-34.77	0.54	0
236	SLU 65	0	541	6232	-34.77	0.53	0
236	SLU 66	0	553	6409	-35.62	0.57	0
236	SLU 67	0	553	6404	-35.62	0.56	0
236	SLU 68	0	549	6346	-35.34	0.55	0
236	SLU 69	0	561	6522	-36.19	0.59	0
236	SLU 70	0	561	6518	-36.19	0.59	0
236	SLU 71	0	556	6468	-35.9	0.58	0
236	SLU 72	0	557	6463	-35.91	0.58	0
236	SLU 73	0	600	6956	-38.62	0.62	0
236	SLU 74	0	611	7132	-39.46	0.66	0.01
236	SLU 75	0	612	7127	-39.47	0.65	0.01
236	SLU 76	0	607	7069	-39.19	0.64	0.01
236	SLU 77	0	619	7246	-40.03	0.68	0.01
236	SLU 78	0	619	7241	-40.04	0.68	0.01
236	SLU 79	0	615	7191	-39.75	0.67	0.01
236	SLU 80	0	615	7186	-39.75	0.67	0.01
236	SLU 81	0	624	7273	-40.26	0.67	0.01
236	SLU 82	0	624	7269	-40.26	0.66	0.01
236	SLU 83	0	632	7387	-40.83	0.69	0.01
236	SLU 84	0	632	7383	-40.83	0.69	0.01
236	SLE RA 1	0	404	4648	-25.93	0.4	0
236	SLE RA 2	0	404	4643	-25.94	0.39	0
236	SLE RA 3	0	412	4761	-26.5	0.41	0
236	SLE RA 4	0	412	4757	-26.51	0.41	0
236	SLE RA 5	0	409	4719	-26.32	0.41	0
236	SLE RA 6	0	417	4837	-26.88	0.43	0
236	SLE RA 7	0	417	4833	-26.89	0.43	0
236	SLE RA 8	0	414	4800	-26.69	0.43	0
236	SLE RA 9	0	414	4797	-26.69	0.42	0
236	SLE RA 10	0	443	5125	-28.5	0.45	0
236	SLE RA 11	0	451	5243	-29.07	0.47	0
236	SLE RA 12	0	451	5240	-29.07	0.47	0
236	SLE RA 13	0	448	5201	-28.88	0.47	0
236	SLE RA 14	0	456	5319	-29.45	0.49	0
236	SLE RA 15	0	456	5316	-29.45	0.49	0
236	SLE RA 16	0	453	5282	-29.25	0.49	0
236	SLE RA 17	0	453	5279	-29.26	0.48	0
236	SLE RA 18	0	459	5337	-29.6	0.48	0
236	SLE RA 19	0	460	5334	-29.6	0.48	0
236	SLE RA 20	0	465	5413	-29.98	0.5	0
236	SLE RA 21	0	465	5410	-29.98	0.49	0
236	SLE FR 1	0	404	4648	-25.93	0.4	0

Nodo	Cont.	Reazione a traslazione			Reazione a rotazione		
Ind.	N.br.	x	y	z	x	y	z
236	SLE FR 2	0	404	4647	-25.94	0.39	0
236	SLE FR 3	0	406	4678	-26.09	0.4	0
236	SLE FR 4	0	421	4854	-27.03	0.42	0
236	SLE FR 5	0	423	4885	-27.18	0.43	0
236	SLE FR 6	0	432	4993	-27.77	0.44	0
236	SLE QP 1	0	404	4648	-25.93	0.4	0
236	SLE QP 2	0	421	4855	-27.03	0.42	0
236	SLD 1	1	432	4840	-29.63	2.8	0.02
236	SLD 2	1	432	4840	-29.63	2.8	0.02
236	SLD 3	7	157	3805	-12.04	6.44	0.04
236	SLD 4	7	157	3805	-12.04	6.44	0.04
236	SLD 5	-9	840	6421	-54.49	-4.39	-0.01
236	SLD 6	-9	840	6421	-54.49	-4.39	-0.01
236	SLD 7	11	-74	2969	4.14	7.74	0.04
236	SLD 8	11	-74	2969	4.14	7.74	0.04
236	SLD 9	-11	915	6740	-58.21	-6.9	-0.03
236	SLD 10	-11	915	6740	-58.21	-6.9	-0.03
236	SLD 11	8	1	3289	0.42	5.23	0.02
236	SLD 12	8	1	3289	0.42	5.23	0.02
236	SLD 13	-7	684	5905	-42.03	-5.59	-0.03
236	SLD 14	-7	684	5905	-42.03	-5.59	-0.03
236	SLD 15	-1	410	4870	-24.44	-1.95	-0.02
236	SLD 16	-1	410	4870	-24.44	-1.95	-0.02
236	SLV 1	2	453	4851	-33.54	5.64	0.05
236	SLV 2	2	453	4851	-33.54	5.64	0.05
236	SLV 3	18	-204	2361	8.61	14.88	0.09
236	SLV 4	18	-204	2361	8.61	14.88	0.09
236	SLV 5	-22	1427	8629	-92.91	-12.03	-0.04
236	SLV 6	-22	1427	8629	-92.91	-12.03	-0.04
236	SLV 7	28	-763	331	47.58	18.78	0.09
236	SLV 8	28	-763	331	47.58	18.78	0.09
236	SLV 9	-29	1604	9379	-101.65	-17.94	-0.08
236	SLV 10	-29	1604	9379	-101.65	-17.94	-0.08
236	SLV 11	22	-586	1080	38.85	12.87	0.05
236	SLV 12	22	-586	1080	38.85	12.87	0.05
236	SLV 13	-18	1045	7348	-62.67	-14.04	-0.08
236	SLV 14	-18	1045	7348	-62.67	-14.04	-0.08
236	SLV 15	-3	388	4859	-20.52	-4.8	-0.04
236	SLV 16	-3	388	4859	-20.52	-4.8	-0.04
237	SLU 1	0	432	3600	-17.81	1.88	0.01
237	SLU 2	0	431	3595	-17.78	1.87	0.01
237	SLU 3	0	445	3715	-18.32	1.94	0.02
237	SLU 4	0	445	3712	-18.3	1.94	0.02
237	SLU 5	0	439	3665	-18.08	1.91	0.02
237	SLU 6	0	453	3786	-18.61	1.98	0.02
237	SLU 7	0	453	3782	-18.6	1.98	0.02
237	SLU 8	0	448	3741	-18.4	1.95	0.02
237	SLU 9	0	448	3738	-18.38	1.95	0.02
237	SLU 10	1	499	4149	-20.65	2.25	0.02
237	SLU 11	1	512	4270	-21.18	2.33	0.02
237	SLU 12	1	512	4267	-21.17	2.32	0.02
237	SLU 13	1	507	4220	-20.94	2.29	0.02
237	SLU 14	1	520	4340	-21.48	2.36	0.02
237	SLU 15	1	520	4337	-21.46	2.36	0.02
237	SLU 16	1	515	4296	-21.26	2.33	0.02
237	SLU 17	1	515	4293	-21.25	2.33	0.02
237	SLU 18	1	528	4393	-21.9	2.42	0.02
237	SLU 19	1	527	4389	-21.89	2.42	0.02
237	SLU 20	1	536	4463	-22.2	2.46	0.02
237	SLU 21	1	536	4460	-22.18	2.46	0.02
237	SLU 22	1	495	4127	-20.46	2.23	0.02
237	SLU 23	1	495	4121	-20.44	2.23	0.02
237	SLU 24	1	508	4242	-20.97	2.3	0.02
237	SLU 25	1	508	4239	-20.95	2.3	0.02
237	SLU 26	1	503	4192	-20.73	2.26	0.02
237	SLU 27	1	516	4312	-21.26	2.34	0.02
237	SLU 28	1	516	4309	-21.25	2.33	0.02
237	SLU 29	1	511	4268	-21.05	2.31	0.02
237	SLU 30	1	511	4265	-21.04	2.3	0.02
237	SLU 31	1	562	4676	-23.3	2.61	0.02
237	SLU 32	1	575	4797	-23.83	2.68	0.02
237	SLU 33	1	575	4793	-23.82	2.68	0.02
237	SLU 34	1	570	4747	-23.59	2.65	0.02
237	SLU 35	1	583	4867	-24.13	2.72	0.02
237	SLU 36	1	583	4864	-24.11	2.72	0.02
237	SLU 37	1	578	4823	-23.91	2.69	0.02
237	SLU 38	1	578	4819	-23.9	2.69	0.02
237	SLU 39	1	591	4919	-24.55	2.77	0.02
237	SLU 40	1	591	4916	-24.54	2.77	0.02
237	SLU 41	1	599	4990	-24.85	2.81	0.02
237	SLU 42	1	599	4987	-24.83	2.81	0.02
237	SLU 43	1	540	4499	-22.24	2.32	0.02
237	SLU 44	0	539	4494	-22.22	2.31	0.02
237	SLU 45	1	553	4614	-22.75	2.39	0.02
237	SLU 46	1	553	4611	-22.74	2.38	0.02
237	SLU 47	0	547	4564	-22.51	2.35	0.02
237	SLU 48	1	561	4685	-23.05	2.42	0.02
237	SLU 49	1	561	4682	-23.03	2.42	0.02
237	SLU 50	0	556	4640	-22.83	2.39	0.02
237	SLU 51	0	555	4637	-22.82	2.39	0.02

Nodo	Cont.	Reazione a traslazione			Reazione a rotazione		
Ind.	N.br.	x	y	z	x	y	z
237	SLU 52	1	606	5049	-25.08	2.69	0.02
237	SLU 53	1	620	5169	-25.62	2.77	0.02
237	SLU 54	1	620	5166	-25.6	2.76	0.02
237	SLU 55	1	614	5119	-25.38	2.73	0.02
237	SLU 56	1	628	5240	-25.91	2.81	0.02
237	SLU 57	1	628	5236	-25.9	2.8	0.02
237	SLU 58	1	623	5195	-25.7	2.78	0.02
237	SLU 59	1	623	5192	-25.68	2.77	0.02
237	SLU 60	1	635	5292	-26.34	2.86	0.02
237	SLU 61	1	635	5289	-26.32	2.86	0.02
237	SLU 62	1	644	5362	-26.63	2.9	0.02
237	SLU 63	1	643	5359	-26.61	2.9	0.02
237	SLU 64	1	603	5026	-24.9	2.67	0.02
237	SLU 65	1	602	5021	-24.87	2.67	0.02
237	SLU 66	1	616	5141	-25.4	2.74	0.02
237	SLU 67	1	616	5138	-25.39	2.74	0.02
237	SLU 68	1	610	5091	-25.16	2.7	0.02
237	SLU 69	1	624	5212	-25.7	2.78	0.02
237	SLU 70	1	624	5208	-25.68	2.78	0.02
237	SLU 71	1	619	5167	-25.48	2.75	0.02
237	SLU 72	1	619	5164	-25.47	2.74	0.02
237	SLU 73	1	670	5576	-27.73	3.05	0.02
237	SLU 74	1	683	5696	-28.27	3.12	0.02
237	SLU 75	1	683	5693	-28.25	3.12	0.02
237	SLU 76	1	678	5646	-28.03	3.09	0.02
237	SLU 77	1	691	5766	-28.56	3.16	0.02
237	SLU 78	1	691	5763	-28.55	3.16	0.02
237	SLU 79	1	686	5722	-28.35	3.13	0.02
237	SLU 80	1	686	5719	-28.33	3.13	0.02
237	SLU 81	1	699	5819	-28.99	3.22	0.02
237	SLU 82	1	698	5815	-28.97	3.21	0.02
237	SLU 83	1	707	5889	-29.28	3.25	0.03
237	SLU 84	1	707	5886	-29.27	3.25	0.03
237	SLE RA 1	0	450	3750	-18.57	1.98	0.02
237	SLE RA 2	0	449	3747	-18.55	1.97	0.02
237	SLE RA 3	0	459	3827	-18.91	2.02	0.02
237	SLE RA 4	0	458	3825	-18.9	2.02	0.02
237	SLE RA 5	0	455	3794	-18.75	2	0.02
237	SLE RA 6	0	464	3874	-19.1	2.05	0.02
237	SLE RA 7	0	464	3872	-19.09	2.05	0.02
237	SLE RA 8	0	460	3844	-18.96	2.03	0.02
237	SLE RA 9	0	460	3842	-18.95	2.03	0.02
237	SLE RA 10	1	494	4117	-20.46	2.23	0.02
237	SLE RA 11	1	503	4197	-20.82	2.28	0.02
237	SLE RA 12	1	503	4195	-20.81	2.28	0.02
237	SLE RA 13	1	500	4164	-20.66	2.25	0.02
237	SLE RA 14	1	509	4244	-21.01	2.3	0.02
237	SLE RA 15	1	509	4242	-21	2.3	0.02
237	SLE RA 16	1	505	4214	-20.87	2.28	0.02
237	SLE RA 17	1	505	4212	-20.86	2.28	0.02
237	SLE RA 18	1	514	4279	-21.3	2.34	0.02
237	SLE RA 19	1	514	4277	-21.28	2.34	0.02
237	SLE RA 20	1	519	4326	-21.49	2.37	0.02
237	SLE RA 21	1	519	4324	-21.48	2.36	0.02
237	SLE FR 1	0	450	3750	-18.57	1.98	0.02
237	SLE FR 2	0	450	3750	-18.56	1.98	0.02
237	SLE FR 3	0	452	3769	-18.65	1.99	0.02
237	SLE FR 4	1	469	3908	-19.38	2.09	0.02
237	SLE FR 5	1	471	3928	-19.46	2.1	0.02
237	SLE FR 6	1	482	4015	-19.93	2.16	0.02
237	SLE QP 1	0	450	3750	-18.57	1.98	0.02
237	SLE QP 2	1	469	3909	-19.39	2.09	0.02
237	SLD 1	10	668	4957	-32.21	9.01	0.05
237	SLD 2	10	668	4957	-32.21	9.01	0.05
237	SLD 3	4	406	3863	-14.51	5.26	0.03
237	SLD 4	4	406	3863	-14.51	5.26	0.03
237	SLD 5	12	926	5882	-50.09	9.85	0.05
237	SLD 6	12	926	5882	-50.09	9.85	0.05
237	SLD 7	-7	53	2236	8.94	-2.65	0
237	SLD 8	-7	53	2236	8.94	-2.65	0
237	SLD 9	8	885	5582	-47.71	6.82	0.03
237	SLD 10	8	885	5582	-47.71	6.82	0.03
237	SLD 11	-11	12	1936	11.32	-5.68	-0.02
237	SLD 12	-11	12	1936	11.32	-5.68	-0.02
237	SLD 13	-3	532	3955	-24.27	-1.09	0
237	SLD 14	-3	532	3955	-24.27	-1.09	0
237	SLD 15	-9	270	2861	-6.56	-4.84	-0.02
237	SLD 16	-9	270	2861	-6.56	-4.84	-0.02
237	SLV 1	23	946	6406	-50.24	18.51	0.09
237	SLV 2	23	946	6406	-50.24	18.51	0.09
237	SLV 3	9	314	3770	-7.52	9.3	0.06
237	SLV 4	9	314	3770	-7.52	9.3	0.06
237	SLV 5	28	1569	8656	-93.42	20.98	0.09
237	SLV 6	28	1569	8656	-93.42	20.98	0.09
237	SLV 7	-18	-535	-131	48.96	-9.72	-0.02
237	SLV 8	-18	-535	-131	48.96	-9.72	-0.02
237	SLV 9	19	1472	7949	-87.73	13.89	0.06
237	SLV 10	19	1472	7949	-87.73	13.89	0.06
237	SLV 11	-27	-631	-839	54.65	-16.81	-0.06
237	SLV 12	-27	-631	-839	54.65	-16.81	-0.06

Nodo	Cont.	Reazione a traslazione			Reazione a rotazione		
Ind.	N.br.	x	y	z	x	y	z
237	SLV 13	-8	623	4048	-31.25	-5.13	-0.03
237	SLV 14	-8	623	4048	-31.25	-5.13	-0.03
237	SLV 15	-22	-8	1411	11.46	-14.34	-0.06
237	SLV 16	-22	-8	1411	11.46	-14.34	-0.06
238	SLU 1	30	-483	6412	7.38	25.21	0.11
238	SLU 2	31	-378	6315	4.18	25.66	0.11
238	SLU 3	31	-501	6622	7.61	26.23	0.12
238	SLU 4	32	-438	6564	5.69	26.5	0.12
238	SLU 5	32	-390	6466	4.29	26.42	0.12
238	SLU 6	32	-513	6772	7.72	26.99	0.12
238	SLU 7	33	-450	6714	5.8	27.26	0.12
238	SLU 8	32	-506	6712	7.6	26.73	0.12
238	SLU 9	32	-444	6654	5.67	27	0.12
238	SLU 10	35	-461	7066	5.75	29.06	0.13
238	SLU 11	35	-583	7373	9.19	29.63	0.13
238	SLU 12	36	-520	7315	7.26	29.91	0.13
238	SLU 13	36	-472	7217	5.86	29.82	0.13
238	SLU 14	36	-595	7523	9.29	30.39	0.13
238	SLU 15	37	-532	7465	7.37	30.67	0.13
238	SLU 16	36	-588	7463	9.17	30.13	0.13
238	SLU 17	36	-526	7405	7.25	30.4	0.13
238	SLU 18	36	-600	7485	9.63	30.07	0.13
238	SLU 19	36	-537	7427	7.7	30.34	0.13
238	SLU 20	37	-612	7635	9.73	30.83	0.14
238	SLU 21	37	-549	7577	7.81	31.1	0.14
238	SLU 22	34	-561	7160	8.8	28.63	0.13
238	SLU 23	35	-457	7064	5.6	29.08	0.13
238	SLU 24	36	-579	7370	9.04	29.65	0.13
238	SLU 25	36	-517	7312	7.12	29.92	0.13
238	SLU 26	36	-468	7214	5.71	29.84	0.13
238	SLU 27	36	-591	7520	9.14	30.41	0.13
238	SLU 28	37	-528	7463	7.22	30.68	0.14
238	SLU 29	36	-584	7460	9.02	30.15	0.13
238	SLU 30	36	-522	7403	7.1	30.42	0.13
238	SLU 31	39	-539	7815	7.17	32.49	0.14
238	SLU 32	40	-661	8121	10.61	33.06	0.15
238	SLU 33	40	-599	8063	8.69	33.33	0.15
238	SLU 34	40	-550	7965	7.28	33.25	0.15
238	SLU 35	40	-673	8271	10.72	33.82	0.15
238	SLU 36	41	-610	8214	8.79	34.09	0.15
238	SLU 37	40	-667	8211	10.59	33.56	0.15
238	SLU 38	40	-604	8154	8.67	33.83	0.15
238	SLU 39	40	-678	8233	11.05	33.49	0.15
238	SLU 40	40	-616	8175	9.13	33.77	0.15
238	SLU 41	41	-690	8383	11.16	34.25	0.15
238	SLU 42	41	-627	8325	9.24	34.53	0.15
238	SLU 43	38	-601	8079	9.11	31.59	0.14
238	SLU 44	38	-496	7982	5.9	32.05	0.14
238	SLU 45	39	-619	8289	9.34	32.62	0.14
238	SLU 46	39	-556	8231	7.42	32.89	0.14
238	SLU 47	39	-508	8133	6.01	32.81	0.14
238	SLU 48	40	-631	8439	9.45	33.38	0.15
238	SLU 49	40	-568	8381	7.53	33.65	0.15
238	SLU 50	40	-624	8379	9.32	33.11	0.15
238	SLU 51	40	-562	8321	7.4	33.39	0.15
238	SLU 52	42	-579	8733	7.48	35.45	0.16
238	SLU 53	43	-701	9040	10.91	36.02	0.16
238	SLU 54	43	-638	8982	8.99	36.29	0.16
238	SLU 55	43	-590	8884	7.58	36.21	0.16
238	SLU 56	44	-713	9190	11.02	36.78	0.16
238	SLU 57	44	-650	9132	9.1	37.05	0.16
238	SLU 58	44	-706	9130	10.89	36.52	0.16
238	SLU 59	44	-644	9072	8.97	36.79	0.16
238	SLU 60	44	-718	9151	11.35	36.46	0.16
238	SLU 61	44	-655	9094	9.43	36.73	0.16
238	SLU 62	45	-730	9302	11.46	37.22	0.16
238	SLU 63	45	-667	9244	9.54	37.49	0.16
238	SLU 64	42	-679	8827	10.53	35.02	0.15
238	SLU 65	42	-575	8730	7.33	35.47	0.16
238	SLU 66	43	-697	9037	10.76	36.04	0.16
238	SLU 67	43	-635	8979	8.84	36.31	0.16
238	SLU 68	43	-586	8881	7.44	36.23	0.16
238	SLU 69	44	-709	9187	10.87	36.8	0.16
238	SLU 70	44	-646	9130	8.95	37.07	0.16
238	SLU 71	44	-702	9127	10.75	36.54	0.16
238	SLU 72	44	-640	9070	8.82	36.81	0.16
238	SLU 73	46	-657	9482	8.9	38.87	0.17
238	SLU 74	47	-779	9788	12.34	39.45	0.17
238	SLU 75	47	-717	9730	10.41	39.72	0.17
238	SLU 76	47	-668	9632	9.01	39.64	0.17
238	SLU 77	48	-791	9938	12.44	40.21	0.18
238	SLU 78	48	-728	9881	10.52	40.48	0.18
238	SLU 79	48	-785	9878	12.32	39.94	0.18
238	SLU 80	48	-722	9821	10.4	40.21	0.18
238	SLU 81	48	-796	9900	12.78	39.88	0.18
238	SLU 82	48	-734	9842	10.85	40.15	0.18
238	SLU 83	49	-808	10050	12.88	40.64	0.18
238	SLU 84	49	-745	9992	10.96	40.91	0.18
238	SLE RA 1	31	-505	6625	7.79	26.18	0.12
238	SLE RA 2	32	-436	6561	5.65	26.49	0.12

Nodo	Cont.	Reazione a traslazione			Reazione a rotazione		
Ind.	N.br.	x	y	z	x	y	z
238	SLE RA 3	32	-517	6766	7.94	26.87	0.12
238	SLE RA 4	32	-476	6727	6.66	27.05	0.12
238	SLE RA 5	32	-443	6661	5.72	26.99	0.12
238	SLE RA 6	33	-525	6866	8.01	27.37	0.12
238	SLE RA 7	33	-483	6827	6.73	27.55	0.12
238	SLE RA 8	33	-521	6826	7.93	27.2	0.12
238	SLE RA 9	33	-479	6787	6.65	27.38	0.12
238	SLE RA 10	34	-490	7062	6.7	28.76	0.13
238	SLE RA 11	35	-572	7266	8.99	29.14	0.13
238	SLE RA 12	35	-530	7228	7.71	29.32	0.13
238	SLE RA 13	35	-498	7162	6.77	29.26	0.13
238	SLE RA 14	35	-580	7366	9.06	29.64	0.13
238	SLE RA 15	36	-538	7328	7.78	29.82	0.13
238	SLE RA 16	35	-575	7326	8.98	29.47	0.13
238	SLE RA 17	35	-534	7288	7.7	29.65	0.13
238	SLE RA 18	35	-583	7341	9.28	29.43	0.13
238	SLE RA 19	35	-542	7302	8	29.61	0.13
238	SLE RA 20	36	-591	7441	9.36	29.93	0.13
238	SLE RA 21	36	-549	7402	8.08	30.11	0.13
238	SLE FR 1	31	-505	6625	7.79	26.18	0.12
238	SLE FR 2	31	-491	6613	7.36	26.24	0.12
238	SLE FR 3	32	-508	6665	7.82	26.39	0.12
238	SLE FR 4	33	-515	6827	7.81	27.22	0.12
238	SLE FR 5	33	-532	6880	8.27	27.36	0.12
238	SLE FR 6	33	-544	6983	8.54	27.81	0.12
238	SLE QP 1	31	-505	6625	7.79	26.18	0.12
238	SLE QP 2	33	-529	6840	8.24	27.16	0.12
238	SLD 1	58	-520	8274	6.54	49.95	0.21
238	SLD 2	58	-520	8274	6.54	49.95	0.21
238	SLD 3	68	-885	8486	18.2	57.92	0.25
238	SLD 4	68	-885	8486	18.2	57.92	0.25
238	SLD 5	26	27	6948	-9.95	21.92	0.09
238	SLD 6	26	27	6948	-9.95	21.92	0.09
238	SLD 7	57	-1188	7656	28.9	48.46	0.21
238	SLD 8	57	-1188	7656	28.9	48.46	0.21
238	SLD 9	8	131	6024	-12.43	5.85	0.03
238	SLD 10	8	131	6024	-12.43	5.85	0.03
238	SLD 11	39	-1084	6732	26.42	32.39	0.15
238	SLD 12	39	-1084	6732	26.42	32.39	0.15
238	SLD 13	-2	-173	5194	-1.72	-3.6	-0.01
238	SLD 14	-2	-173	5194	-1.72	-3.6	-0.01
238	SLD 15	7	-537	5406	9.93	4.36	0.03
238	SLD 16	7	-537	5406	9.93	4.36	0.03
238	SLV 1	92	-512	10189	4.4	80.54	0.33
238	SLV 2	92	-512	10189	4.4	80.54	0.33
238	SLV 3	115	-1361	10701	31.52	99.51	0.42
238	SLV 4	115	-1361	10701	31.52	99.51	0.42
238	SLV 5	16	764	7069	-34.05	14.42	0.05
238	SLV 6	16	764	7069	-34.05	14.42	0.05
238	SLV 7	92	-2066	8774	56.36	77.62	0.34
238	SLV 8	92	-2066	8774	56.36	77.62	0.34
238	SLV 9	-27	1009	4906	-39.89	-23.31	-0.1
238	SLV 10	-27	1009	4906	-39.89	-23.31	-0.1
238	SLV 11	49	-1822	6611	50.53	39.9	0.19
238	SLV 12	49	-1822	6611	50.53	39.9	0.19
238	SLV 13	-50	303	2979	-15.05	-45.19	-0.18
238	SLV 14	-50	303	2979	-15.05	-45.19	-0.18
238	SLV 15	-27	-546	3491	12.08	-26.23	-0.09
238	SLV 16	-27	-546	3491	12.08	-26.23	-0.09
239	SLU 1	5	-319	6169	10.53	3.56	-0.01
239	SLU 2	4	-230	6070	6.34	2.57	0
239	SLU 3	6	-326	6371	10.68	3.69	-0.01
239	SLU 4	5	-272	6312	8.17	3.09	-0.01
239	SLU 5	5	-231	6211	6.29	2.66	0
239	SLU 6	6	-327	6512	10.63	3.78	-0.01
239	SLU 7	5	-273	6453	8.12	3.19	-0.01
239	SLU 8	6	-321	6451	10.43	3.76	-0.01
239	SLU 9	5	-267	6391	7.91	3.16	-0.01
239	SLU 10	5	-294	6832	8.58	2.82	-0.01
239	SLU 11	6	-390	7134	12.93	3.94	-0.01
239	SLU 12	6	-337	7074	10.41	3.34	-0.01
239	SLU 13	5	-295	6973	8.53	2.92	-0.01
239	SLU 14	6	-391	7275	12.88	4.04	-0.01
239	SLU 15	6	-338	7215	10.36	3.44	-0.01
239	SLU 16	6	-385	7213	12.67	4.01	-0.01
239	SLU 17	6	-332	7154	10.16	3.41	-0.01
239	SLU 18	6	-411	7258	13.74	3.92	-0.01
239	SLU 19	6	-358	7198	11.22	3.33	-0.01
239	SLU 20	6	-412	7399	13.69	4.02	-0.01
239	SLU 21	6	-358	7339	11.17	3.42	-0.01
239	SLU 22	6	-377	6914	12.49	3.86	-0.01
239	SLU 23	5	-288	6815	8.3	2.86	-0.01
239	SLU 24	6	-383	7117	12.65	3.98	-0.01
239	SLU 25	6	-330	7058	10.13	3.38	-0.01
239	SLU 26	5	-288	6956	8.25	2.96	-0.01
239	SLU 27	6	-384	7258	12.6	4.08	-0.01
239	SLU 28	6	-331	7198	10.08	3.48	-0.01
239	SLU 29	6	-378	7196	12.39	4.05	-0.01
239	SLU 30	6	-325	7137	9.88	3.45	-0.01
239	SLU 31	6	-352	7578	10.55	3.11	-0.01

Nodo	Cont.	Reazione a traslazione			Reazione a rotazione		
Ind.	N.br.	x	y	z	x	y	z
239	SLU 32	7	-447	7879	14.89	4.23	-0.01
239	SLU 33	6	-394	7820	12.38	3.64	-0.01
239	SLU 34	6	-353	7719	10.5	3.21	-0.01
239	SLU 35	7	-448	8020	14.84	4.33	-0.01
239	SLU 36	6	-395	7961	12.33	3.73	-0.01
239	SLU 37	7	-443	7958	14.64	4.3	-0.01
239	SLU 38	6	-389	7899	12.12	3.71	-0.01
239	SLU 39	7	-468	8003	15.7	4.22	-0.01
239	SLU 40	6	-415	7944	13.19	3.62	-0.01
239	SLU 41	7	-469	8144	15.65	4.32	-0.01
239	SLU 42	6	-416	8085	13.14	3.72	-0.01
239	SLU 43	7	-395	7764	13.01	4.53	-0.01
239	SLU 44	6	-306	7665	8.82	3.53	-0.01
239	SLU 45	7	-402	7966	13.17	4.65	-0.01
239	SLU 46	6	-348	7907	10.65	4.06	-0.01
239	SLU 47	6	-307	7806	8.77	3.63	-0.01
239	SLU 48	7	-403	8107	13.12	4.75	-0.01
239	SLU 49	7	-349	8048	10.6	4.15	-0.01
239	SLU 50	7	-397	8046	12.91	4.72	-0.01
239	SLU 51	7	-343	7986	10.4	4.13	-0.01
239	SLU 52	6	-370	8427	11.07	3.79	-0.01
239	SLU 53	8	-466	8729	15.42	4.91	-0.01
239	SLU 54	7	-413	8669	12.9	4.31	-0.01
239	SLU 55	7	-371	8568	11.02	3.89	-0.01
239	SLU 56	8	-467	8870	15.36	5.01	-0.01
239	SLU 57	7	-414	8810	12.85	4.41	-0.01
239	SLU 58	8	-461	8808	15.16	4.98	-0.01
239	SLU 59	7	-408	8749	12.65	4.38	-0.01
239	SLU 60	8	-487	8853	16.22	4.89	-0.01
239	SLU 61	7	-434	8793	13.71	4.29	-0.01
239	SLU 62	8	-488	8994	16.17	4.99	-0.01
239	SLU 63	7	-434	8934	13.66	4.39	-0.01
239	SLU 64	7	-453	8509	14.98	4.82	-0.01
239	SLU 65	6	-364	8410	10.79	3.83	-0.01
239	SLU 66	8	-459	8712	15.13	4.95	-0.01
239	SLU 67	7	-406	8653	12.62	4.35	-0.01
239	SLU 68	7	-364	8551	10.74	3.93	-0.01
239	SLU 69	8	-460	8853	15.08	5.05	-0.01
239	SLU 70	7	-407	8794	12.57	4.45	-0.01
239	SLU 71	8	-454	8791	14.88	5.02	-0.01
239	SLU 72	7	-401	8732	12.36	4.42	-0.01
239	SLU 73	7	-428	9173	13.03	4.08	-0.01
239	SLU 74	8	-523	9474	17.38	5.2	-0.01
239	SLU 75	8	-470	9415	14.86	4.6	-0.01
239	SLU 76	7	-429	9314	12.98	4.18	-0.01
239	SLU 77	8	-524	9615	17.33	5.3	-0.01
239	SLU 78	8	-471	9556	14.81	4.7	-0.01
239	SLU 79	8	-519	9553	17.12	5.27	-0.01
239	SLU 80	8	-465	9494	14.61	4.67	-0.01
239	SLU 81	8	-544	9598	18.19	5.19	-0.01
239	SLU 82	8	-491	9539	15.67	4.59	-0.01
239	SLU 83	8	-545	9739	18.14	5.28	-0.01
239	SLU 84	8	-492	9680	15.62	4.69	-0.01
239	SLE RA 1	6	-335	6382	11.09	3.65	-0.01
239	SLE RA 2	5	-276	6316	8.3	2.98	-0.01
239	SLE RA 3	6	-340	6517	11.19	3.73	-0.01
239	SLE RA 4	5	-304	6477	9.52	3.33	-0.01
239	SLE RA 5	5	-277	6410	8.26	3.05	-0.01
239	SLE RA 6	6	-340	6611	11.16	3.79	-0.01
239	SLE RA 7	5	-305	6571	9.48	3.4	-0.01
239	SLE RA 8	6	-337	6570	11.02	3.78	-0.01
239	SLE RA 9	5	-301	6530	9.35	3.38	-0.01
239	SLE RA 10	5	-319	6824	9.79	3.15	-0.01
239	SLE RA 11	6	-383	7025	12.69	3.9	-0.01
239	SLE RA 12	6	-347	6985	11.01	3.5	-0.01
239	SLE RA 13	5	-320	6918	9.76	3.22	-0.01
239	SLE RA 14	6	-383	7119	12.66	3.96	-0.01
239	SLE RA 15	6	-348	7079	10.98	3.56	-0.01
239	SLE RA 16	6	-379	7078	12.52	3.94	-0.01
239	SLE RA 17	6	-344	7038	10.84	3.55	-0.01
239	SLE RA 18	6	-397	7108	13.23	3.89	-0.01
239	SLE RA 19	6	-361	7068	11.55	3.49	-0.01
239	SLE RA 20	6	-397	7202	13.2	3.95	-0.01
239	SLE RA 21	6	-362	7162	11.52	3.55	-0.01
239	SLE FR 1	6	-335	6382	11.09	3.65	-0.01
239	SLE FR 2	5	-324	6368	10.53	3.51	-0.01
239	SLE FR 3	6	-336	6419	11.08	3.67	-0.01
239	SLE FR 4	6	-342	6586	11.17	3.59	-0.01
239	SLE FR 5	6	-354	6637	11.72	3.74	-0.01
239	SLE FR 6	6	-366	6745	12.16	3.77	-0.01
239	SLE QP 1	6	-335	6382	11.09	3.65	-0.01
239	SLE QP 2	6	-354	6599	11.73	3.72	-0.01
239	SLD 1	23	-56	4852	-1.33	17.15	-0.03
239	SLD 2	23	-56	4852	-1.33	17.15	-0.03
239	SLD 3	17	-444	5107	17.28	21.61	-0.03
239	SLD 4	17	-444	5107	17.28	21.61	-0.03
239	SLD 5	20	324	5689	-20.42	0.99	0
239	SLD 6	20	324	5689	-20.42	0.99	0
239	SLD 7	0	-970	6538	41.62	15.84	-0.02
239	SLD 8	0	-970	6538	41.62	15.84	-0.02

Nodo	Cont.	Reazione a traslazione			Reazione a rotazione		
Ind.	N.br.	x	y	z	x	y	z
239	SLD 9	11	262	6661	-18.16	-8.41	0.01
239	SLD 10	11	262	6661	-18.16	-8.41	0.01
239	SLD 11	-9	-1032	7510	43.88	6.45	-0.01
239	SLD 12	-9	-1032	7510	43.88	6.45	-0.01
239	SLD 13	-6	-264	8092	6.18	-14.17	0.02
239	SLD 14	-6	-264	8092	6.18	-14.17	0.02
239	SLD 15	-12	-652	8347	24.8	-9.72	0.01
239	SLD 16	-12	-652	8347	24.8	-9.72	0.01
239	SLV 1	47	344	2505	-18.87	35.89	-0.05
239	SLV 2	47	344	2505	-18.87	35.89	-0.05
239	SLV 3	32	-562	3111	24.58	46.8	-0.07
239	SLV 4	32	-562	3111	24.58	46.8	-0.07
239	SLV 5	41	1230	4453	-63.35	-3.18	0
239	SLV 6	41	1230	4453	-63.35	-3.18	0
239	SLV 7	-9	-1791	6471	81.49	33.19	-0.04
239	SLV 8	-9	-1791	6471	81.49	33.19	-0.04
239	SLV 9	20	1084	6728	-58.02	-25.75	0.03
239	SLV 10	20	1084	6728	-58.02	-25.75	0.03
239	SLV 11	-29	-1938	8746	86.81	10.61	-0.01
239	SLV 12	-29	-1938	8746	86.81	10.61	-0.01
239	SLV 13	-21	-145	10088	-1.12	-39.36	0.05
239	SLV 14	-21	-145	10088	-1.12	-39.36	0.05
239	SLV 15	-36	-1052	10694	42.33	-28.45	0.04
239	SLV 16	-36	-1052	10694	42.33	-28.45	0.04
240	SLU 1	-1	696	5612	-55.07	-0.72	0
240	SLU 2	-1	687	5540	-54.35	-0.68	0
240	SLU 3	-1	717	5814	-56.98	-0.75	0
240	SLU 4	-1	712	5771	-56.55	-0.73	0
240	SLU 5	-1	699	5671	-55.52	-0.71	0
240	SLU 6	-1	730	5946	-58.16	-0.77	0
240	SLU 7	-1	724	5903	-57.73	-0.75	0
240	SLU 8	-1	720	5874	-57.41	-0.76	0
240	SLU 9	-1	715	5831	-56.98	-0.74	0
240	SLU 10	-1	792	6405	-63.37	-0.79	0
240	SLU 11	-1	823	6679	-66.01	-0.86	0
240	SLU 12	-1	817	6636	-65.58	-0.84	0
240	SLU 13	-1	805	6536	-64.55	-0.81	0
240	SLU 14	-1	835	6811	-67.19	-0.88	0
240	SLU 15	-1	830	6768	-66.75	-0.86	0
240	SLU 16	-1	826	6739	-66.44	-0.87	0
240	SLU 17	-1	821	6696	-66.01	-0.85	0
240	SLU 18	-1	846	6847	-67.96	-0.88	0
240	SLU 19	-1	841	6804	-67.53	-0.85	0
240	SLU 20	-1	859	6979	-69.14	-0.9	0
240	SLU 21	-1	853	6936	-68.71	-0.88	0
240	SLU 22	-1	797	6459	-63.75	-0.83	0
240	SLU 23	-1	789	6388	-63.03	-0.79	0
240	SLU 24	-1	819	6662	-65.67	-0.86	0
240	SLU 25	-1	814	6619	-65.24	-0.84	0
240	SLU 26	-1	801	6519	-64.21	-0.82	0
240	SLU 27	-1	831	6793	-66.84	-0.88	0
240	SLU 28	-1	826	6750	-66.41	-0.86	0
240	SLU 29	-1	822	6722	-66.1	-0.87	0
240	SLU 30	-1	817	6679	-65.67	-0.85	0
240	SLU 31	-1	894	7252	-72.06	-0.9	0
240	SLU 32	-1	924	7527	-74.7	-0.97	0
240	SLU 33	-1	919	7484	-74.27	-0.95	0
240	SLU 34	-1	906	7384	-73.23	-0.93	0
240	SLU 35	-1	937	7658	-75.87	-0.99	0
240	SLU 36	-1	932	7615	-75.44	-0.97	0
240	SLU 37	-1	928	7587	-75.13	-0.98	0
240	SLU 38	-1	922	7544	-74.7	-0.96	0
240	SLU 39	-1	948	7695	-76.65	-0.99	0
240	SLU 40	-1	943	7652	-76.22	-0.96	0
240	SLU 41	-1	961	7826	-77.82	-1.01	0
240	SLU 42	-1	955	7783	-77.39	-0.99	0
240	SLU 43	-1	869	7005	-68.61	-0.9	0
240	SLU 44	-1	860	6933	-67.89	-0.86	0
240	SLU 45	-1	891	7207	-70.53	-0.93	0
240	SLU 46	-1	886	7164	-70.09	-0.91	0
240	SLU 47	-1	873	7064	-69.06	-0.88	0
240	SLU 48	-1	903	7339	-71.7	-0.95	0
240	SLU 49	-1	898	7296	-71.27	-0.93	0
240	SLU 50	-1	894	7267	-70.96	-0.94	0
240	SLU 51	-1	889	7224	-70.52	-0.92	0
240	SLU 52	-1	966	7798	-76.92	-0.97	0
240	SLU 53	-1	996	8072	-79.55	-1.04	0
240	SLU 54	-1	991	8029	-79.12	-1.02	0
240	SLU 55	-1	978	7929	-78.09	-0.99	0
240	SLU 56	-1	1009	8204	-80.73	-1.06	0
240	SLU 57	-1	1003	8161	-80.3	-1.04	0
240	SLU 58	-1	1000	8132	-79.98	-1.05	0
240	SLU 59	-1	994	8089	-79.55	-1.03	0
240	SLU 60	-1	1020	8240	-81.51	-1.05	0
240	SLU 61	-1	1015	8197	-81.07	-1.03	0
240	SLU 62	-1	1032	8372	-82.68	-1.08	0
240	SLU 63	-1	1027	8329	-82.25	-1.05	0
240	SLU 64	-1	971	7852	-77.29	-1.01	0
240	SLU 65	-1	962	7781	-76.57	-0.97	0
240	SLU 66	-1	993	8055	-79.21	-1.04	0

Nodo	Cont.	Reazione a traslazione			Reazione a rotazione		
Ind.	N.br.	x	y	z	x	y	z
240	SLU 67	-1	987	8012	-78.78	-1.02	0
240	SLU 68	-1	975	7912	-77.75	-0.99	0
240	SLU 69	-1	1005	8186	-80.39	-1.06	0
240	SLU 70	-1	1000	8143	-79.95	-1.04	0
240	SLU 71	-1	996	8115	-79.64	-1.05	0
240	SLU 72	-1	991	8072	-79.21	-1.03	0
240	SLU 73	-1	1068	8645	-85.6	-1.08	0
240	SLU 74	-1	1098	8920	-88.24	-1.15	0
240	SLU 75	-1	1093	8877	-87.81	-1.13	0
240	SLU 76	-1	1080	8777	-86.78	-1.1	0
240	SLU 77	-1	1111	9051	-89.41	-1.17	0
240	SLU 78	-1	1105	9008	-88.98	-1.15	0
240	SLU 79	-1	1102	8980	-88.67	-1.16	0
240	SLU 80	-1	1096	8937	-88.24	-1.14	0
240	SLU 81	-1	1122	9088	-90.19	-1.16	0
240	SLU 82	-1	1117	9045	-89.76	-1.14	0
240	SLU 83	-1	1134	9219	-91.37	-1.19	0
240	SLU 84	-1	1129	9176	-90.93	-1.16	0
240	SLE RA 1	-1	725	5854	-57.55	-0.75	0
240	SLE RA 2	-1	719	5806	-57.07	-0.73	0
240	SLE RA 3	-1	739	5989	-58.83	-0.77	0
240	SLE RA 4	-1	735	5960	-58.54	-0.76	0
240	SLE RA 5	-1	727	5894	-57.85	-0.74	0
240	SLE RA 6	-1	747	6077	-59.61	-0.79	0
240	SLE RA 7	-1	744	6048	-59.32	-0.77	0
240	SLE RA 8	-1	741	6029	-59.11	-0.78	0
240	SLE RA 9	-1	738	6000	-58.83	-0.77	0
240	SLE RA 10	-1	789	6383	-63.09	-0.8	0
240	SLE RA 11	-1	809	6566	-64.85	-0.85	0
240	SLE RA 12	-1	806	6537	-64.56	-0.83	0
240	SLE RA 13	-1	797	6470	-63.87	-0.81	0
240	SLE RA 14	-1	818	6653	-65.63	-0.86	0
240	SLE RA 15	-1	814	6624	-65.34	-0.85	0
240	SLE RA 16	-1	812	6606	-65.13	-0.85	0
240	SLE RA 17	-1	808	6577	-64.84	-0.84	0
240	SLE RA 18	-1	825	6678	-66.15	-0.86	0
240	SLE RA 19	-1	822	6649	-65.86	-0.84	0
240	SLE RA 20	-1	833	6765	-66.93	-0.87	0
240	SLE RA 21	-1	830	6736	-66.64	-0.86	0
240	SLE FR 1	-1	725	5854	-57.55	-0.75	0
240	SLE FR 2	-1	723	5844	-57.45	-0.75	0
240	SLE FR 3	-1	728	5889	-57.86	-0.76	0
240	SLE FR 4	-1	754	6091	-60.03	-0.78	0
240	SLE FR 5	-1	758	6136	-60.44	-0.79	0
240	SLE FR 6	-1	775	6266	-61.85	-0.8	0
240	SLE QP 1	-1	725	5854	-57.55	-0.75	0
240	SLE QP 2	-1	755	6101	-60.13	-0.78	0
240	SLD 1	19	809	6185	-63.09	16.36	0.06
240	SLD 2	19	809	6185	-63.09	16.36	0.06
240	SLD 3	15	517	5129	-44.36	13.11	0.04
240	SLD 4	15	517	5129	-44.36	13.11	0.04
240	SLD 5	11	1213	7727	-89.42	9.29	0.03
240	SLD 6	11	1213	7727	-89.42	9.29	0.03
240	SLD 7	-2	241	4208	-27	-1.54	-0.01
240	SLD 8	-2	241	4208	-27	-1.54	-0.01
240	SLD 9	0	1268	7994	-93.26	-0.02	0
240	SLD 10	0	1268	7994	-93.26	-0.02	0
240	SLD 11	-12	296	4475	-30.84	-10.85	-0.04
240	SLD 12	-12	296	4475	-30.84	-10.85	-0.04
240	SLD 13	-16	993	7073	-75.9	-14.67	-0.05
240	SLD 14	-16	993	7073	-75.9	-14.67	-0.05
240	SLD 15	-20	701	6017	-57.17	-17.92	-0.06
240	SLD 16	-20	701	6017	-57.17	-17.92	-0.06
240	SLV 1	49	883	6305	-67.2	43.07	0.15
240	SLV 2	49	883	6305	-67.2	43.07	0.15
240	SLV 3	40	186	3780	-22.42	34.88	0.12
240	SLV 4	40	186	3780	-22.42	34.88	0.12
240	SLV 5	28	1850	9993	-130.15	24.8	0.09
240	SLV 6	28	1850	9993	-130.15	24.8	0.09
240	SLV 7	-3	-473	1574	19.09	-2.51	-0.01
240	SLV 8	-3	-473	1574	19.09	-2.51	-0.01
240	SLV 9	1	1983	10628	-139.34	0.95	0
240	SLV 10	1	1983	10628	-139.34	0.95	0
240	SLV 11	-30	-341	2209	9.9	-26.37	-0.09
240	SLV 12	-30	-341	2209	9.9	-26.37	-0.09
240	SLV 13	-41	1324	8422	-97.83	-36.44	-0.13
240	SLV 14	-41	1324	8422	-97.83	-36.44	-0.13
240	SLV 15	-50	627	5897	-53.06	-44.64	-0.16
240	SLV 16	-50	627	5897	-53.06	-44.64	-0.16
241	SLU 1	31	-197	2657	24.69	31.55	0
241	SLU 2	30	-198	2623	24.59	31.18	0
241	SLU 3	32	-209	2737	25.96	32.9	0
241	SLU 4	32	-210	2717	25.9	32.67	0
241	SLU 5	31	-207	2677	25.5	32.11	0
241	SLU 6	33	-218	2791	26.88	33.83	0
241	SLU 7	33	-219	2771	26.82	33.61	0
241	SLU 8	32	-215	2765	26.52	33.41	0
241	SLU 9	32	-216	2745	26.46	33.19	0
241	SLU 10	35	-238	2941	28.99	36.5	0
241	SLU 11	37	-249	3055	30.36	38.22	0

Nodo	Cont.	Reazione a traslazione			Reazione a rotazione		
Ind.	N.br.	x	y	z	x	y	z
241	SLU 12	37	-250	3035	30.3	38	0
241	SLU 13	36	-247	2996	29.9	37.44	0
241	SLU 14	38	-258	3110	31.28	39.15	0
241	SLU 15	38	-259	3089	31.22	38.93	0
241	SLU 16	38	-255	3084	30.92	38.74	0
241	SLU 17	37	-256	3063	30.86	38.52	0
241	SLU 18	38	-254	3111	30.97	39.16	0
241	SLU 19	38	-255	3091	30.91	38.94	0
241	SLU 20	39	-263	3166	31.89	40.09	0
241	SLU 21	39	-264	3145	31.83	39.87	0
241	SLU 22	36	-237	2972	29.09	36.79	0
241	SLU 23	35	-238	2939	28.99	36.42	0
241	SLU 24	37	-249	3053	30.36	38.14	0
241	SLU 25	37	-250	3032	30.3	37.92	0
241	SLU 26	36	-247	2993	29.9	37.35	0
241	SLU 27	38	-258	3107	31.28	39.07	0
241	SLU 28	38	-259	3087	31.22	38.85	0
241	SLU 29	38	-255	3081	30.92	38.66	0
241	SLU 30	37	-256	3061	30.86	38.43	0
241	SLU 31	41	-278	3257	33.39	41.75	0
241	SLU 32	42	-289	3371	34.76	43.47	0
241	SLU 33	42	-290	3351	34.7	43.24	0
241	SLU 34	41	-287	3311	34.3	42.68	0
241	SLU 35	43	-298	3425	35.68	44.4	0
241	SLU 36	43	-299	3405	35.62	44.17	0
241	SLU 37	43	-295	3399	35.32	43.98	0
241	SLU 38	42	-296	3379	35.26	43.76	0
241	SLU 39	43	-294	3427	35.37	44.4	0
241	SLU 40	43	-295	3407	35.31	44.18	0
241	SLU 41	44	-303	3481	36.29	45.33	0
241	SLU 42	44	-304	3461	36.23	45.11	0
241	SLU 43	38	-242	3346	30.58	39.22	0
241	SLU 44	38	-243	3312	30.48	38.85	0
241	SLU 45	39	-254	3426	31.86	40.56	0
241	SLU 46	39	-255	3406	31.8	40.34	0
241	SLU 47	39	-252	3366	31.4	39.78	0
241	SLU 48	40	-263	3480	32.77	41.5	0
241	SLU 49	40	-264	3460	32.71	41.27	0
241	SLU 50	40	-260	3454	32.42	41.08	0
241	SLU 51	40	-261	3434	32.36	40.86	0
241	SLU 52	43	-283	3630	34.89	44.17	0
241	SLU 53	45	-294	3744	36.26	45.89	0
241	SLU 54	44	-295	3724	36.2	45.67	0
241	SLU 55	44	-292	3684	35.8	45.1	0
241	SLU 56	45	-304	3798	37.17	46.82	0
241	SLU 57	45	-304	3778	37.11	46.6	0
241	SLU 58	45	-300	3772	36.82	46.41	0
241	SLU 59	45	-301	3752	36.76	46.18	0
241	SLU 60	45	-299	3800	36.87	46.83	0
241	SLU 61	45	-300	3780	36.81	46.6	0
241	SLU 62	46	-309	3855	37.79	47.76	0
241	SLU 63	46	-309	3834	37.73	47.53	0
241	SLU 64	43	-282	3661	34.98	44.46	0
241	SLU 65	43	-283	3628	34.88	44.09	0
241	SLU 66	45	-294	3741	36.26	45.81	0
241	SLU 67	44	-295	3721	36.2	45.58	0
241	SLU 68	44	-292	3682	35.8	45.02	0
241	SLU 69	45	-304	3796	37.17	46.74	0
241	SLU 70	45	-304	3776	37.11	46.52	0
241	SLU 71	45	-300	3770	36.82	46.32	0
241	SLU 72	45	-301	3750	36.76	46.1	0
241	SLU 73	48	-323	3946	39.29	49.41	0
241	SLU 74	50	-335	4060	40.66	51.13	0
241	SLU 75	49	-335	4039	40.6	50.91	0
241	SLU 76	49	-332	4000	40.2	50.35	0
241	SLU 77	51	-344	4114	41.57	52.06	0
241	SLU 78	50	-344	4094	41.51	51.84	0
241	SLU 79	50	-341	4088	41.22	51.65	0
241	SLU 80	50	-341	4068	41.16	51.43	0
241	SLU 81	51	-340	4116	41.27	52.07	0
241	SLU 82	50	-340	4096	41.21	51.85	0
241	SLU 83	51	-349	4170	42.19	53	0
241	SLU 84	51	-349	4150	42.13	52.78	0
241	SLE RA 1	32	-208	2747	25.94	33.05	0
241	SLE RA 2	32	-209	2725	25.88	32.8	0
241	SLE RA 3	33	-216	2800	26.79	33.95	0
241	SLE RA 4	33	-217	2787	26.75	33.8	0
241	SLE RA 5	32	-215	2761	26.49	33.42	0
241	SLE RA 6	34	-222	2837	27.4	34.57	0
241	SLE RA 7	33	-223	2823	27.36	34.42	0
241	SLE RA 8	33	-220	2819	27.17	34.29	0
241	SLE RA 9	33	-221	2806	27.13	34.14	0
241	SLE RA 10	35	-236	2937	28.81	36.35	0
241	SLE RA 11	36	-243	3013	29.73	37.5	0
241	SLE RA 12	36	-244	2999	29.69	37.35	0
241	SLE RA 13	36	-242	2973	29.42	36.97	0
241	SLE RA 14	37	-249	3049	30.34	38.12	0
241	SLE RA 15	37	-250	3035	30.3	37.97	0
241	SLE RA 16	37	-247	3032	30.1	37.84	0
241	SLE RA 17	37	-248	3018	30.06	37.69	0

Nodo	Cont.	Reazione a traslazione			Reazione a rotazione		
Ind.	N.br.	x	y	z	x	y	z
241	SLE RA 18	37	-246	3050	30.14	38.12	0
241	SLE RA 19	37	-247	3037	30.1	37.97	0
241	SLE RA 20	38	-253	3086	30.75	38.74	0
241	SLE RA 21	37	-253	3073	30.71	38.59	0
241	SLE FR 1	32	-208	2747	25.94	33.05	0
241	SLE FR 2	32	-208	2742	25.93	33	0
241	SLE FR 3	32	-211	2761	26.19	33.3	0
241	SLE FR 4	34	-220	2833	27.19	34.52	0
241	SLE FR 5	34	-222	2852	27.45	34.82	0
241	SLE FR 6	35	-227	2899	28.04	35.58	0
241	SLE QP 1	32	-208	2747	25.94	33.05	0
241	SLE QP 2	34	-220	2838	27.2	34.57	0
241	SLD 1	47	-218	3592	28.78	47	0
241	SLD 2	47	-218	3592	28.78	47	0
241	SLD 3	51	-657	2847	50.53	51.25	0
241	SLD 4	51	-657	2847	50.53	51.25	0
241	SLD 5	31	447	4194	-5.31	31.85	0
241	SLD 6	31	447	4194	-5.31	31.85	0
241	SLD 7	45	-1017	1711	67.19	46.02	0
241	SLD 8	45	-1017	1711	67.19	46.02	0
241	SLD 9	22	578	3965	-12.78	23.12	-0.01
241	SLD 10	22	578	3965	-12.78	23.12	-0.01
241	SLD 11	36	-886	1482	59.71	37.28	0
241	SLD 12	36	-886	1482	59.71	37.28	0
241	SLD 13	17	218	2829	3.87	17.88	-0.01
241	SLD 14	17	218	2829	3.87	17.88	-0.01
241	SLD 15	21	-221	2084	25.62	22.13	-0.01
241	SLD 16	21	-221	2084	25.62	22.13	-0.01
241	SLV 1	64	-210	4641	30.58	63.67	0.01
241	SLV 2	64	-210	4641	30.58	63.67	0.01
241	SLV 3	74	-1262	2854	82.66	73.88	0.01
241	SLV 4	74	-1262	2854	82.66	73.88	0.01
241	SLV 5	28	1379	6089	-50.76	27.81	0
241	SLV 6	28	1379	6089	-50.76	27.81	0
241	SLV 7	61	-2129	132	122.82	61.85	0.01
241	SLV 8	61	-2129	132	122.82	61.85	0.01
241	SLV 9	7	1689	5543	-68.41	7.29	-0.01
241	SLV 10	7	1689	5543	-68.41	7.29	-0.01
241	SLV 11	39	-1819	-413	105.17	41.32	0
241	SLV 12	39	-1819	-413	105.17	41.32	0
241	SLV 13	-7	823	2822	-28.25	-4.74	-0.02
241	SLV 14	-7	823	2822	-28.25	-4.74	-0.02
241	SLV 15	3	-229	1035	23.82	5.47	-0.01
241	SLV 16	3	-229	1035	23.82	5.47	-0.01
242	SLU 1	-3	181	4178	-8.39	-0.44	0.01
242	SLU 2	-3	182	4171	-8.45	-0.44	0.01
242	SLU 3	-3	184	4332	-8.54	-0.44	0.01
242	SLU 4	-3	185	4328	-8.57	-0.45	0.01
242	SLU 5	-3	184	4274	-8.53	-0.44	0.01
242	SLU 6	-3	185	4435	-8.61	-0.45	0.01
242	SLU 7	-3	186	4431	-8.65	-0.45	0.01
242	SLU 8	-3	184	4384	-8.54	-0.44	0.01
242	SLU 9	-3	184	4380	-8.58	-0.44	0.01
242	SLU 10	-4	205	4851	-9.46	-0.51	0.01
242	SLU 11	-4	206	5012	-9.54	-0.52	0.01
242	SLU 12	-4	207	5008	-9.58	-0.52	0.01
242	SLU 13	-4	206	4954	-9.53	-0.52	0.01
242	SLU 14	-4	208	5115	-9.61	-0.52	0.01
242	SLU 15	-4	208	5111	-9.65	-0.52	0.01
242	SLU 16	-4	206	5064	-9.55	-0.52	0.01
242	SLU 17	-4	207	5060	-9.58	-0.52	0.01
242	SLU 18	-4	213	5149	-9.82	-0.54	0.01
242	SLU 19	-4	214	5145	-9.86	-0.54	0.01
242	SLU 20	-4	214	5252	-9.9	-0.55	0.01
242	SLU 21	-4	215	5248	-9.94	-0.55	0.01
242	SLU 22	-3	202	4823	-9.35	-0.5	0.01
242	SLU 23	-3	203	4816	-9.41	-0.5	0.01
242	SLU 24	-4	205	4977	-9.49	-0.51	0.01
242	SLU 25	-4	205	4973	-9.53	-0.51	0.01
242	SLU 26	-4	204	4919	-9.48	-0.51	0.01
242	SLU 27	-4	206	5080	-9.57	-0.51	0.01
242	SLU 28	-4	207	5076	-9.6	-0.51	0.01
242	SLU 29	-4	205	5029	-9.5	-0.51	0.01
242	SLU 30	-4	205	5025	-9.54	-0.51	0.01
242	SLU 31	-4	225	5496	-10.41	-0.58	0.01
242	SLU 32	-4	227	5657	-10.49	-0.58	0.01
242	SLU 33	-4	228	5652	-10.53	-0.58	0.01
242	SLU 34	-4	227	5599	-10.49	-0.58	0.01
242	SLU 35	-4	228	5760	-10.57	-0.59	0.01
242	SLU 36	-4	229	5756	-10.61	-0.59	0.01
242	SLU 37	-4	227	5709	-10.5	-0.58	0.01
242	SLU 38	-4	228	5705	-10.54	-0.58	0.01
242	SLU 39	-4	234	5794	-10.78	-0.61	0.01
242	SLU 40	-4	235	5790	-10.81	-0.61	0.01
242	SLU 41	-4	235	5897	-10.85	-0.61	0.01
242	SLU 42	-4	236	5893	-10.89	-0.61	0.01
242	SLU 43	-4	228	5210	-10.58	-0.54	0.01
242	SLU 44	-4	229	5203	-10.64	-0.55	0.01
242	SLU 45	-4	231	5365	-10.73	-0.55	0.01
242	SLU 46	-4	232	5360	-10.76	-0.55	0.01

Nodo	Cont.	Reazione a traslazione			Reazione a rotazione		
Ind.	N.br.	x	y	z	x	y	z
242	SLU 47	-4	231	5306	-10.72	-0.55	0.01
242	SLU 48	-4	232	5468	-10.8	-0.56	0.01
242	SLU 49	-4	233	5463	-10.84	-0.56	0.01
242	SLU 50	-4	231	5417	-10.73	-0.55	0.01
242	SLU 51	-4	232	5412	-10.77	-0.55	0.01
242	SLU 52	-4	252	5883	-11.65	-0.62	0.01
242	SLU 53	-4	253	6044	-11.73	-0.63	0.01
242	SLU 54	-4	254	6040	-11.77	-0.63	0.01
242	SLU 55	-4	253	5986	-11.72	-0.63	0.01
242	SLU 56	-4	255	6147	-11.81	-0.63	0.01
242	SLU 57	-4	256	6143	-11.84	-0.63	0.01
242	SLU 58	-4	253	6096	-11.74	-0.63	0.01
242	SLU 59	-4	254	6092	-11.77	-0.63	0.01
242	SLU 60	-4	260	6181	-12.01	-0.65	0.01
242	SLU 61	-4	261	6177	-12.05	-0.65	0.01
242	SLU 62	-5	262	6285	-12.09	-0.66	0.01
242	SLU 63	-5	262	6280	-12.13	-0.66	0.01
242	SLU 64	-4	249	5855	-11.54	-0.61	0.01
242	SLU 65	-4	250	5848	-11.6	-0.61	0.01
242	SLU 66	-4	252	6009	-11.68	-0.62	0.01
242	SLU 67	-4	253	6005	-11.72	-0.62	0.01
242	SLU 68	-4	252	5951	-11.68	-0.61	0.01
242	SLU 69	-4	253	6112	-11.76	-0.62	0.01
242	SLU 70	-4	254	6108	-11.79	-0.62	0.01
242	SLU 71	-4	252	6061	-11.69	-0.62	0.01
242	SLU 72	-4	252	6057	-11.73	-0.62	0.01
242	SLU 73	-5	273	6528	-12.6	-0.69	0.01
242	SLU 74	-5	274	6689	-12.68	-0.69	0.01
242	SLU 75	-5	275	6685	-12.72	-0.69	0.01
242	SLU 76	-5	274	6631	-12.68	-0.69	0.01
242	SLU 77	-5	276	6792	-12.76	-0.7	0.01
242	SLU 78	-5	276	6788	-12.8	-0.7	0.01
242	SLU 79	-5	274	6741	-12.69	-0.69	0.01
242	SLU 80	-5	275	6737	-12.73	-0.69	0.01
242	SLU 81	-5	281	6826	-12.97	-0.72	0.01
242	SLU 82	-5	282	6822	-13	-0.72	0.01
242	SLU 83	-5	282	6929	-13.04	-0.72	0.01
242	SLU 84	-5	283	6925	-13.08	-0.72	0.01
242	SLE RA 1	-3	187	4362	-8.66	-0.45	0.01
242	SLE RA 2	-3	188	4358	-8.71	-0.46	0.01
242	SLE RA 3	-3	189	4465	-8.76	-0.46	0.01
242	SLE RA 4	-3	189	4462	-8.79	-0.46	0.01
242	SLE RA 5	-3	189	4426	-8.76	-0.46	0.01
242	SLE RA 6	-3	190	4534	-8.81	-0.46	0.01
242	SLE RA 7	-3	190	4531	-8.84	-0.46	0.01
242	SLE RA 8	-3	189	4500	-8.77	-0.46	0.01
242	SLE RA 9	-3	189	4497	-8.79	-0.46	0.01
242	SLE RA 10	-3	203	4811	-9.37	-0.51	0.01
242	SLE RA 11	-4	204	4918	-9.43	-0.51	0.01
242	SLE RA 12	-4	204	4915	-9.45	-0.51	0.01
242	SLE RA 13	-4	204	4879	-9.42	-0.51	0.01
242	SLE RA 14	-4	205	4987	-9.48	-0.51	0.01
242	SLE RA 15	-4	205	4984	-9.5	-0.51	0.01
242	SLE RA 16	-4	204	4953	-9.43	-0.51	0.01
242	SLE RA 17	-4	204	4950	-9.46	-0.51	0.01
242	SLE RA 18	-4	208	5010	-9.62	-0.53	0.01
242	SLE RA 19	-4	209	5007	-9.64	-0.53	0.01
242	SLE RA 20	-4	209	5078	-9.67	-0.53	0.01
242	SLE RA 21	-4	210	5076	-9.69	-0.53	0.01
242	SLE FR 1	-3	187	4362	-8.66	-0.45	0.01
242	SLE FR 2	-3	187	4361	-8.67	-0.45	0.01
242	SLE FR 3	-3	187	4390	-8.68	-0.46	0.01
242	SLE FR 4	-3	193	4556	-8.96	-0.48	0.01
242	SLE FR 5	-3	194	4584	-8.97	-0.48	0.01
242	SLE FR 6	-3	198	4686	-9.14	-0.49	0.01
242	SLE QP 1	-3	187	4362	-8.66	-0.45	0.01
242	SLE QP 2	-3	193	4557	-8.95	-0.48	0.01
242	SLD 1	-2	203	4232	-11.25	0.26	0
242	SLD 2	-2	203	4232	-11.25	0.26	0
242	SLD 3	0	-125	3655	6.96	2.02	0
242	SLD 4	0	-125	3655	6.96	2.02	0
242	SLD 5	-6	695	5333	-37.25	-2.93	0
242	SLD 6	-6	695	5333	-37.25	-2.93	0
242	SLD 7	1	-400	3412	23.44	2.95	0.01
242	SLD 8	1	-400	3412	23.44	2.95	0.01
242	SLD 9	-7	787	5701	-41.34	-3.9	0.01
242	SLD 10	-7	787	5701	-41.34	-3.9	0.01
242	SLD 11	0	-308	3780	19.35	1.98	0.01
242	SLD 12	0	-308	3780	19.35	1.98	0.01
242	SLD 13	-6	512	5458	-24.86	-2.97	0.01
242	SLD 14	-6	512	5458	-24.86	-2.97	0.01
242	SLD 15	-4	183	4881	-6.65	-1.21	0.02
242	SLD 16	-4	183	4881	-6.65	-1.21	0.02
242	SLV 1	-1	226	3816	-14.79	1.08	-0.02
242	SLV 2	-1	226	3816	-14.79	1.08	-0.02
242	SLV 3	4	-561	2428	28.83	5.57	-0.01
242	SLV 4	4	-561	2428	28.83	5.57	-0.01
242	SLV 5	-11	1396	6440	-76.87	-6.83	-0.01
242	SLV 6	-11	1396	6440	-76.87	-6.83	-0.01
242	SLV 7	7	-1226	1813	68.55	8.15	0.01

Nodo	Cont.	Reazione a traslazione			Reazione a rotazione		
Ind.	N.br.	x	y	z	x	y	z
242	SLV 8	7	-1226	1813	68.55	8.15	0.01
242	SLV 9	-13	1613	7300	-86.45	-9.1	0.01
242	SLV 10	-13	1613	7300	-86.45	-9.1	0.01
242	SLV 11	4	-1010	2673	58.96	5.87	0.02
242	SLV 12	4	-1010	2673	58.96	5.87	0.02
242	SLV 13	-11	948	6685	-46.73	-6.52	0.03
242	SLV 14	-11	948	6685	-46.73	-6.52	0.03
242	SLV 15	-5	161	5297	-3.11	-2.03	0.03
242	SLV 16	-5	161	5297	-3.11	-2.03	0.03
243	SLU 1	-1	431	3603	-26.21	1.45	-0.01
243	SLU 2	-1	432	3598	-26.23	1.45	-0.01
243	SLU 3	-1	445	3719	-27.07	1.5	-0.01
243	SLU 4	-1	445	3715	-27.08	1.5	-0.01
243	SLU 5	-1	440	3669	-26.78	1.47	-0.01
243	SLU 6	-1	453	3790	-27.61	1.53	-0.01
243	SLU 7	-1	453	3786	-27.63	1.53	-0.01
243	SLU 8	-1	448	3745	-27.31	1.51	-0.01
243	SLU 9	-1	448	3742	-27.32	1.5	-0.01
243	SLU 10	-1	498	4160	-30.07	1.75	-0.01
243	SLU 11	-1	511	4281	-30.9	1.8	-0.01
243	SLU 12	-1	511	4278	-30.92	1.8	-0.01
243	SLU 13	-1	506	4231	-30.62	1.78	-0.01
243	SLU 14	-1	519	4352	-31.45	1.83	-0.01
243	SLU 15	-1	520	4349	-31.46	1.83	-0.01
243	SLU 16	-1	514	4308	-31.15	1.81	-0.01
243	SLU 17	-1	515	4304	-31.16	1.81	-0.01
243	SLU 18	-1	526	4407	-31.69	1.88	-0.01
243	SLU 19	-1	526	4404	-31.7	1.88	-0.01
243	SLU 20	-1	534	4478	-32.24	1.91	-0.01
243	SLU 21	-1	534	4475	-32.25	1.91	-0.01
243	SLU 22	-1	494	4135	-29.91	1.72	-0.01
243	SLU 23	-1	494	4130	-29.93	1.72	-0.01
243	SLU 24	-1	507	4251	-30.77	1.77	-0.01
243	SLU 25	-1	508	4247	-30.78	1.77	-0.01
243	SLU 26	-1	503	4201	-30.48	1.75	-0.01
243	SLU 27	-1	516	4322	-31.32	1.8	-0.01
243	SLU 28	-1	516	4318	-31.33	1.8	-0.01
243	SLU 29	-1	511	4277	-31.01	1.78	-0.01
243	SLU 30	-1	511	4274	-31.02	1.78	-0.01
243	SLU 31	-1	560	4692	-33.77	2.02	-0.01
243	SLU 32	-1	574	4813	-34.61	2.08	-0.01
243	SLU 33	-1	574	4810	-34.62	2.07	-0.01
243	SLU 34	-1	569	4763	-34.32	2.05	-0.01
243	SLU 35	-1	582	4884	-35.16	2.1	-0.01
243	SLU 36	-1	582	4881	-35.17	2.1	-0.01
243	SLU 37	-1	577	4840	-34.85	2.08	-0.01
243	SLU 38	-1	577	4836	-34.86	2.08	-0.01
243	SLU 39	-1	589	4939	-35.4	2.16	-0.01
243	SLU 40	-1	589	4936	-35.41	2.15	-0.01
243	SLU 41	-1	597	5010	-35.95	2.18	-0.01
243	SLU 42	-1	597	5007	-35.96	2.18	-0.01
243	SLU 43	-1	539	4502	-32.8	1.79	-0.01
243	SLU 44	-1	540	4496	-32.82	1.79	-0.01
243	SLU 45	-1	553	4617	-33.66	1.84	-0.01
243	SLU 46	-1	553	4614	-33.67	1.84	-0.01
243	SLU 47	-1	548	4567	-33.37	1.82	-0.01
243	SLU 48	-1	561	4688	-34.21	1.87	-0.01
243	SLU 49	-1	561	4685	-34.22	1.87	-0.01
243	SLU 50	-1	556	4644	-33.9	1.85	-0.01
243	SLU 51	-1	556	4640	-33.91	1.85	-0.01
243	SLU 52	-1	606	5059	-36.66	2.09	-0.01
243	SLU 53	-1	619	5180	-37.5	2.14	-0.01
243	SLU 54	-1	619	5176	-37.51	2.14	-0.01
243	SLU 55	-1	614	5130	-37.21	2.12	-0.01
243	SLU 56	-1	627	5251	-38.04	2.17	-0.01
243	SLU 57	-1	628	5247	-38.06	2.17	-0.01
243	SLU 58	-1	622	5206	-37.74	2.15	-0.01
243	SLU 59	-1	623	5203	-37.75	2.15	-0.01
243	SLU 60	-1	634	5306	-38.28	2.22	-0.01
243	SLU 61	-1	634	5302	-38.3	2.22	-0.01
243	SLU 62	-1	642	5377	-38.83	2.25	-0.01
243	SLU 63	-1	642	5373	-38.84	2.25	-0.01
243	SLU 64	-1	602	5034	-36.51	2.06	-0.01
243	SLU 65	-1	602	5028	-36.53	2.06	-0.01
243	SLU 66	-1	615	5149	-37.36	2.11	-0.01
243	SLU 67	-1	616	5146	-37.37	2.11	-0.01
243	SLU 68	-1	611	5099	-37.07	2.09	-0.01
243	SLU 69	-1	624	5220	-37.91	2.14	-0.01
243	SLU 70	-1	624	5217	-37.92	2.14	-0.01
243	SLU 71	-1	619	5176	-37.6	2.12	-0.01
243	SLU 72	-1	619	5172	-37.62	2.12	-0.01
243	SLU 73	-1	668	5591	-40.36	2.36	-0.01
243	SLU 74	-1	682	5712	-41.2	2.42	-0.01
243	SLU 75	-1	682	5708	-41.21	2.42	-0.01
243	SLU 76	-1	677	5662	-40.91	2.39	-0.01
243	SLU 77	-1	690	5783	-41.75	2.45	-0.01
243	SLU 78	-1	690	5779	-41.76	2.44	-0.01
243	SLU 79	-1	685	5738	-41.44	2.42	-0.01
243	SLU 80	-1	685	5735	-41.45	2.42	-0.01
243	SLU 81	-1	697	5838	-41.99	2.5	-0.01

Nodo	Cont.	Reazione a traslazione			Reazione a rotazione		
Ind.	N.br.	x	y	z	x	y	z
243	SLU 82	-1	697	5834	-42	2.5	-0.01
243	SLU 83	-1	705	5909	-42.54	2.53	-0.01
243	SLU 84	-1	705	5905	-42.55	2.52	-0.01
243	SLE RA 1	-1	449	3755	-27.27	1.53	-0.01
243	SLE RA 2	-1	449	3751	-27.28	1.53	-0.01
243	SLE RA 3	-1	458	3832	-27.84	1.56	-0.01
243	SLE RA 4	-1	458	3830	-27.85	1.56	-0.01
243	SLE RA 5	-1	455	3799	-27.65	1.54	-0.01
243	SLE RA 6	-1	464	3879	-28.2	1.58	-0.01
243	SLE RA 7	-1	464	3877	-28.21	1.58	-0.01
243	SLE RA 8	-1	461	3850	-28	1.57	-0.01
243	SLE RA 9	-1	461	3848	-28.01	1.56	-0.01
243	SLE RA 10	-1	494	4127	-29.84	1.73	-0.01
243	SLE RA 11	-1	502	4207	-30.4	1.76	-0.01
243	SLE RA 12	-1	502	4205	-30.41	1.76	-0.01
243	SLE RA 13	-1	499	4174	-30.21	1.75	-0.01
243	SLE RA 14	-1	508	4255	-30.76	1.78	-0.01
243	SLE RA 15	-1	508	4252	-30.77	1.78	-0.01
243	SLE RA 16	-1	505	4225	-30.56	1.77	-0.01
243	SLE RA 17	-1	505	4223	-30.57	1.77	-0.01
243	SLE RA 18	-1	512	4291	-30.92	1.82	-0.01
243	SLE RA 19	-1	512	4289	-30.93	1.81	-0.01
243	SLE RA 20	-1	518	4338	-31.29	1.84	-0.01
243	SLE RA 21	-1	518	4336	-31.3	1.83	-0.01
243	SLE FR 1	-1	449	3755	-27.27	1.53	-0.01
243	SLE FR 2	-1	449	3754	-27.27	1.53	-0.01
243	SLE FR 3	-1	452	3774	-27.41	1.54	-0.01
243	SLE FR 4	-1	468	3915	-28.37	1.61	-0.01
243	SLE FR 5	-1	470	3935	-28.51	1.62	-0.01
243	SLE FR 6	-1	481	4023	-29.1	1.67	-0.01
243	SLE QP 1	-1	449	3755	-27.27	1.53	-0.01
243	SLE QP 2	-1	468	3916	-28.36	1.61	-0.01
243	SLD 1	3	678	4782	-38.96	4.76	-0.02
243	SLD 2	3	678	4782	-38.96	4.76	-0.02
243	SLD 3	1	392	4070	-24.32	3.01	-0.01
243	SLD 4	1	392	4070	-24.32	3.01	-0.01
243	SLD 5	3	964	5256	-53.74	5.21	-0.02
243	SLD 6	3	964	5256	-53.74	5.21	-0.02
243	SLD 7	-3	13	2883	-4.95	-0.61	0
243	SLD 8	-3	13	2883	-4.95	-0.61	0
243	SLD 9	2	924	4949	-51.78	3.84	-0.02
243	SLD 10	2	924	4949	-51.78	3.84	-0.02
243	SLD 11	-4	-27	2576	-2.99	-1.98	0.01
243	SLD 12	-4	-27	2576	-2.99	-1.98	0.01
243	SLD 13	-2	544	3762	-32.41	0.21	0
243	SLD 14	-2	544	3762	-32.41	0.21	0
243	SLD 15	-4	259	3050	-17.77	-1.53	0.01
243	SLD 16	-4	259	3050	-17.77	-1.53	0.01
243	SLV 1	7	970	5972	-53.74	9.08	-0.04
243	SLV 2	7	970	5972	-53.74	9.08	-0.04
243	SLV 3	3	284	4255	-18.59	4.79	-0.02
243	SLV 4	3	284	4255	-18.59	4.79	-0.02
243	SLV 5	8	1660	7136	-89.29	10.36	-0.04
243	SLV 6	8	1660	7136	-89.29	10.36	-0.04
243	SLV 7	-6	-628	1414	27.89	-3.94	0.02
243	SLV 8	-6	-628	1414	27.89	-3.94	0.02
243	SLV 9	5	1564	6418	-84.61	7.17	-0.03
243	SLV 10	5	1564	6418	-84.61	7.17	-0.03
243	SLV 11	-9	-723	696	32.56	-7.13	0.03
243	SLV 12	-9	-723	696	32.56	-7.13	0.03
243	SLV 13	-4	653	3577	-38.14	-1.56	0
243	SLV 14	-4	653	3577	-38.14	-1.56	0
243	SLV 15	-8	-34	1860	-2.99	-5.85	0.02
243	SLV 16	-8	-34	1860	-2.99	-5.85	0.02
244	SLU 1	-1	192	5169	4.01	-0.7	0
244	SLU 2	0	188	5113	4.12	-0.66	0
244	SLU 3	-1	192	5352	4.53	-0.73	0
244	SLU 4	-1	190	5318	4.6	-0.71	0
244	SLU 5	0	186	5231	4.57	-0.68	0
244	SLU 6	-1	190	5470	4.98	-0.75	0
244	SLU 7	-1	187	5436	5.05	-0.73	0
244	SLU 8	-1	187	5405	4.91	-0.74	0
244	SLU 9	-1	185	5371	4.97	-0.72	0
244	SLU 10	-1	203	5902	5.92	-0.76	0
244	SLU 11	-1	207	6142	6.33	-0.83	0
244	SLU 12	-1	205	6108	6.4	-0.81	0
244	SLU 13	-1	201	6020	6.37	-0.78	0
244	SLU 14	-1	205	6260	6.78	-0.85	0
244	SLU 15	-1	202	6226	6.85	-0.83	0
244	SLU 16	-1	202	6195	6.71	-0.84	0
244	SLU 17	-1	200	6161	6.77	-0.82	0
244	SLU 18	-1	213	6297	6.58	-0.84	0
244	SLU 19	-1	211	6263	6.65	-0.82	0
244	SLU 20	-1	211	6415	7.03	-0.86	0
244	SLU 21	-1	209	6381	7.09	-0.84	0
244	SLU 22	-1	206	5941	5.69	-0.8	0
244	SLU 23	-1	203	5885	5.8	-0.76	0
244	SLU 24	-1	206	6125	6.21	-0.83	0
244	SLU 25	-1	204	6091	6.27	-0.81	0
244	SLU 26	-1	200	6003	6.24	-0.78	0

Nodo	Cont.	Reazione a traslazione			Reazione a rotazione		
Ind.	N.br.	x	y	z	x	y	z
244	SLU 27	-1	204	6243	6.66	-0.85	0
244	SLU 28	-1	202	6209	6.72	-0.83	0
244	SLU 29	-1	202	6178	6.58	-0.84	0
244	SLU 30	-1	200	6144	6.65	-0.82	0
244	SLU 31	-1	218	6674	7.59	-0.86	0
244	SLU 32	-1	222	6914	8.01	-0.93	0
244	SLU 33	-1	219	6880	8.07	-0.91	0
244	SLU 34	-1	215	6792	8.04	-0.88	0
244	SLU 35	-1	219	7032	8.46	-0.95	0
244	SLU 36	-1	217	6998	8.52	-0.93	0
244	SLU 37	-1	217	6967	8.38	-0.94	0
244	SLU 38	-1	215	6933	8.45	-0.92	0
244	SLU 39	-1	228	7069	8.26	-0.94	0
244	SLU 40	-1	226	7035	8.32	-0.92	0
244	SLU 41	-1	226	7187	8.7	-0.96	0
244	SLU 42	-1	223	7153	8.77	-0.94	0
244	SLU 43	-1	244	6455	4.64	-0.87	0
244	SLU 44	-1	240	6398	4.75	-0.83	0
244	SLU 45	-1	244	6638	5.16	-0.9	0
244	SLU 46	-1	242	6604	5.23	-0.88	0
244	SLU 47	-1	238	6517	5.2	-0.86	0
244	SLU 48	-1	242	6756	5.61	-0.92	0
244	SLU 49	-1	240	6722	5.68	-0.9	0
244	SLU 50	-1	240	6691	5.54	-0.91	0
244	SLU 51	-1	238	6657	5.6	-0.89	0
244	SLU 52	-1	256	7188	6.55	-0.93	0
244	SLU 53	-1	259	7428	6.96	-1	0
244	SLU 54	-1	257	7394	7.03	-0.98	0
244	SLU 55	-1	253	7306	7	-0.96	0
244	SLU 56	-1	257	7546	7.41	-1.02	0
244	SLU 57	-1	255	7512	7.48	-1	0
244	SLU 58	-1	255	7481	7.34	-1.01	0
244	SLU 59	-1	253	7447	7.4	-0.99	0
244	SLU 60	-1	266	7583	7.21	-1.01	0
244	SLU 61	-1	263	7549	7.28	-0.99	0
244	SLU 62	-1	264	7701	7.66	-1.03	0
244	SLU 63	-1	261	7667	7.72	-1.01	0
244	SLU 64	-1	259	7227	6.32	-0.97	0
244	SLU 65	-1	255	7171	6.42	-0.94	0
244	SLU 66	-1	259	7411	6.84	-1	0
244	SLU 67	-1	257	7377	6.9	-0.98	0
244	SLU 68	-1	253	7289	6.87	-0.96	0
244	SLU 69	-1	257	7529	7.29	-1.02	0
244	SLU 70	-1	255	7495	7.35	-1	0
244	SLU 71	-1	254	7464	7.21	-1.02	0
244	SLU 72	-1	252	7430	7.28	-0.99	0
244	SLU 73	-1	270	7960	8.22	-1.04	0
244	SLU 74	-1	274	8200	8.64	-1.1	0
244	SLU 75	-1	272	8166	8.7	-1.08	0
244	SLU 76	-1	268	8078	8.67	-1.06	0
244	SLU 77	-1	272	8318	9.08	-1.12	0
244	SLU 78	-1	270	8284	9.15	-1.1	0
244	SLU 79	-1	269	8253	9.01	-1.11	0
244	SLU 80	-1	267	8219	9.08	-1.09	0
244	SLU 81	-1	280	8355	8.88	-1.11	0
244	SLU 82	-1	278	8321	8.95	-1.09	0
244	SLU 83	-1	278	8473	9.33	-1.14	0
244	SLU 84	-1	276	8439	9.4	-1.11	0
244	SLE RA 1	-1	196	5390	4.49	-0.72	0
244	SLE RA 2	-1	193	5352	4.56	-0.7	0
244	SLE RA 3	-1	196	5512	4.84	-0.75	0
244	SLE RA 4	-1	194	5489	4.88	-0.73	0
244	SLE RA 5	-1	192	5431	4.86	-0.72	0
244	SLE RA 6	-1	195	5591	5.14	-0.76	0
244	SLE RA 7	-1	193	5568	5.18	-0.75	0
244	SLE RA 8	-1	193	5547	5.09	-0.75	0
244	SLE RA 9	-1	191	5525	5.13	-0.74	0
244	SLE RA 10	-1	203	5878	5.76	-0.77	0
244	SLE RA 11	-1	206	6038	6.04	-0.81	0
244	SLE RA 12	-1	205	6016	6.08	-0.8	0
244	SLE RA 13	-1	202	5957	6.06	-0.78	0
244	SLE RA 14	-1	205	6117	6.34	-0.83	0
244	SLE RA 15	-1	203	6094	6.38	-0.81	0
244	SLE RA 16	-1	203	6074	6.29	-0.82	0
244	SLE RA 17	-1	201	6051	6.33	-0.81	0
244	SLE RA 18	-1	210	6142	6.2	-0.82	0
244	SLE RA 19	-1	209	6119	6.25	-0.81	0
244	SLE RA 20	-1	209	6220	6.5	-0.83	0
244	SLE RA 21	-1	207	6198	6.55	-0.82	0
244	SLE FR 1	-1	196	5390	4.49	-0.72	0
244	SLE FR 2	-1	195	5382	4.5	-0.72	0
244	SLE FR 3	-1	195	5421	4.61	-0.73	0
244	SLE FR 4	-1	200	5608	5.02	-0.75	0
244	SLE FR 5	-1	200	5647	5.12	-0.76	0
244	SLE FR 6	-1	203	5766	5.35	-0.77	0
244	SLE QP 1	-1	196	5390	4.49	-0.72	0
244	SLE QP 2	-1	200	5615	5	-0.75	0
244	SLD 1	14	501	5603	-12.61	15.8	-0.01
244	SLD 2	14	501	5603	-12.61	15.8	-0.01
244	SLD 3	11	162	5008	5.52	12.76	-0.01

Nodo	Cont.	Reazione a traslazione			Reazione a rotazione		
Ind.	N.br.	x	y	z	x	y	z
244	SLD 4	11	162	5008	5.52	12.76	-0.01
244	SLD 5	8	804	6514	-27.77	8.81	0
244	SLD 6	8	804	6514	-27.77	8.81	0
244	SLD 7	-1	-325	4531	32.65	-1.3	0
244	SLD 8	-1	-325	4531	32.65	-1.3	0
244	SLD 9	0	725	6700	-22.64	-0.21	0
244	SLD 10	0	725	6700	-22.64	-0.21	0
244	SLD 11	-9	-404	4717	37.78	-10.32	0
244	SLD 12	-9	-404	4717	37.78	-10.32	0
244	SLD 13	-12	238	6223	4.49	-14.27	0.01
244	SLD 14	-12	238	6223	4.49	-14.27	0.01
244	SLD 15	-15	-100	5628	22.62	-17.3	0.01
244	SLD 16	-15	-100	5628	22.62	-17.3	0.01
244	SLV 1	36	917	5594	-36.85	41.55	-0.01
244	SLV 2	36	917	5594	-36.85	41.55	-0.01
244	SLV 3	30	108	4165	6.42	33.86	-0.02
244	SLV 4	30	108	4165	6.42	33.86	-0.02
244	SLV 5	20	1642	7776	-73.18	23.61	0
244	SLV 6	20	1642	7776	-73.18	23.61	0
244	SLV 7	-1	-1055	3013	71.05	-2.04	-0.01
244	SLV 8	-1	-1055	3013	71.05	-2.04	-0.01
244	SLV 9	0	1455	8218	-61.04	0.53	0.01
244	SLV 10	0	1455	8218	-61.04	0.53	0.01
244	SLV 11	-21	-1242	3455	83.18	-25.12	0
244	SLV 12	-21	-1242	3455	83.18	-25.12	0
244	SLV 13	-31	293	7066	3.59	-35.37	0.02
244	SLV 14	-31	293	7066	3.59	-35.37	0.02
244	SLV 15	-37	-516	5637	46.86	-43.06	0.02
244	SLV 16	-37	-516	5637	46.86	-43.06	0.02
245	SLU 1	39	-730	6206	30.6	30.85	0.11
245	SLU 2	39	-626	6109	27.16	31.17	0.11
245	SLU 3	41	-759	6411	31.87	32.08	0.12
245	SLU 4	41	-697	6353	29.8	32.28	0.12
245	SLU 5	40	-646	6258	28.07	32.09	0.12
245	SLU 6	42	-778	6560	32.78	33	0.12
245	SLU 7	42	-716	6502	30.71	33.19	0.12
245	SLU 8	41	-770	6503	32.43	32.67	0.12
245	SLU 9	41	-707	6445	30.36	32.87	0.12
245	SLU 10	44	-734	6819	31.44	35.27	0.13
245	SLU 11	46	-866	7122	36.14	36.18	0.13
245	SLU 12	46	-804	7063	34.08	36.38	0.13
245	SLU 13	46	-754	6968	32.35	36.19	0.13
245	SLU 14	47	-886	7270	37.06	37.09	0.14
245	SLU 15	47	-824	7212	34.99	37.29	0.14
245	SLU 16	47	-877	7214	36.71	36.77	0.13
245	SLU 17	47	-815	7156	34.64	36.97	0.14
245	SLU 18	46	-884	7221	36.72	36.7	0.13
245	SLU 19	47	-822	7163	34.65	36.9	0.13
245	SLU 20	48	-904	7370	37.63	37.62	0.14
245	SLU 21	48	-842	7311	35.56	37.81	0.14
245	SLU 22	44	-836	6918	34.91	34.98	0.13
245	SLU 23	44	-733	6821	31.46	35.3	0.13
245	SLU 24	46	-865	7123	36.17	36.21	0.13
245	SLU 25	46	-803	7065	34.1	36.41	0.13
245	SLU 26	46	-753	6970	32.38	36.22	0.13
245	SLU 27	47	-885	7272	37.08	37.12	0.14
245	SLU 28	47	-823	7214	35.01	37.32	0.14
245	SLU 29	47	-876	7215	36.73	36.8	0.13
245	SLU 30	47	-814	7157	34.66	37	0.14
245	SLU 31	50	-841	7531	35.74	39.4	0.14
245	SLU 32	51	-973	7834	40.45	40.31	0.15
245	SLU 33	51	-911	7775	38.38	40.51	0.15
245	SLU 34	51	-861	7680	36.65	40.32	0.15
245	SLU 35	52	-993	7982	41.36	41.22	0.15
245	SLU 36	52	-931	7924	39.29	41.42	0.15
245	SLU 37	52	-984	7926	41.01	40.9	0.15
245	SLU 38	52	-922	7868	38.94	41.1	0.15
245	SLU 39	52	-990	7933	41.02	40.83	0.15
245	SLU 40	52	-928	7875	38.95	41.03	0.15
245	SLU 41	53	-1010	8082	41.93	41.75	0.15
245	SLU 42	53	-948	8023	39.86	41.94	0.15
245	SLU 43	49	-912	7824	38.31	38.69	0.14
245	SLU 44	49	-809	7726	34.87	39.01	0.14
245	SLU 45	51	-941	8029	39.57	39.92	0.15
245	SLU 46	51	-879	7971	37.51	40.12	0.15
245	SLU 47	50	-829	7875	35.78	39.93	0.15
245	SLU 48	52	-961	8178	40.48	40.83	0.15
245	SLU 49	52	-899	8119	38.42	41.03	0.15
245	SLU 50	51	-952	8121	40.13	40.51	0.15
245	SLU 51	51	-890	8063	38.07	40.71	0.15
245	SLU 52	54	-917	8437	39.15	43.11	0.16
245	SLU 53	56	-1049	8739	43.85	44.02	0.16
245	SLU 54	56	-987	8681	41.78	44.21	0.16
245	SLU 55	55	-936	8586	40.06	44.02	0.16
245	SLU 56	57	-1069	8888	44.76	44.93	0.16
245	SLU 57	57	-1007	8830	42.7	45.13	0.17
245	SLU 58	56	-1060	8832	44.41	44.61	0.16
245	SLU 59	57	-998	8773	42.35	44.81	0.16
245	SLU 60	56	-1066	8839	44.42	44.54	0.16
245	SLU 61	56	-1004	8780	42.36	44.74	0.16

Nodo	Cont.	Reazione a traslazione			Reazione a rotazione		
Ind.	N.br.	x	y	z	x	y	z
245	SLU 62	58	-1086	8987	45.33	45.45	0.17
245	SLU 63	58	-1024	8929	43.27	45.65	0.17
245	SLU 64	54	-1019	8536	42.61	42.81	0.16
245	SLU 65	54	-915	8438	39.17	43.14	0.16
245	SLU 66	56	-1048	8741	43.87	44.05	0.16
245	SLU 67	56	-986	8683	41.81	44.25	0.16
245	SLU 68	56	-935	8587	40.08	44.06	0.16
245	SLU 69	57	-1067	8890	44.79	44.96	0.16
245	SLU 70	57	-1005	8831	42.72	45.16	0.17
245	SLU 71	57	-1058	8833	44.44	44.64	0.16
245	SLU 72	57	-996	8775	42.37	44.84	0.16
245	SLU 73	60	-1023	9149	43.45	47.24	0.17
245	SLU 74	61	-1155	9451	48.15	48.15	0.18
245	SLU 75	61	-1093	9393	46.09	48.34	0.18
245	SLU 76	61	-1043	9298	44.36	48.15	0.18
245	SLU 77	62	-1175	9600	49.06	49.06	0.18
245	SLU 78	62	-1113	9542	47	49.26	0.18
245	SLU 79	62	-1166	9544	48.72	48.74	0.18
245	SLU 80	62	-1104	9485	46.65	48.94	0.18
245	SLU 81	62	-1173	9551	48.73	48.67	0.18
245	SLU 82	62	-1111	9492	46.66	48.87	0.18
245	SLU 83	63	-1193	9699	49.64	49.58	0.18
245	SLU 84	63	-1131	9641	47.57	49.78	0.18
245	SLE RA 1	41	-760	6409	31.83	32.03	0.12
245	SLE RA 2	41	-691	6345	29.54	32.25	0.12
245	SLE RA 3	42	-780	6546	32.67	32.85	0.12
245	SLE RA 4	42	-738	6507	31.3	32.98	0.12
245	SLE RA 5	41	-705	6444	30.15	32.85	0.12
245	SLE RA 6	42	-793	6645	33.28	33.46	0.12
245	SLE RA 7	42	-751	6606	31.9	33.59	0.12
245	SLE RA 8	42	-787	6608	33.05	33.25	0.12
245	SLE RA 9	42	-745	6569	31.67	33.38	0.12
245	SLE RA 10	44	-763	6818	32.39	34.98	0.13
245	SLE RA 11	45	-851	7020	35.53	35.58	0.13
245	SLE RA 12	45	-810	6981	34.15	35.71	0.13
245	SLE RA 13	45	-776	6917	33	35.59	0.13
245	SLE RA 14	46	-865	7119	36.13	36.19	0.13
245	SLE RA 15	46	-823	7080	34.76	36.32	0.13
245	SLE RA 16	46	-859	7081	35.9	35.98	0.13
245	SLE RA 17	46	-817	7043	34.52	36.11	0.13
245	SLE RA 18	45	-863	7086	35.91	35.93	0.13
245	SLE RA 19	46	-822	7047	34.53	36.06	0.13
245	SLE RA 20	46	-876	7185	36.52	36.54	0.13
245	SLE RA 21	46	-835	7146	35.14	36.67	0.13
245	SLE FR 1	41	-760	6409	31.83	32.03	0.12
245	SLE FR 2	41	-747	6396	31.38	32.07	0.12
245	SLE FR 3	41	-766	6449	32.08	32.27	0.12
245	SLE FR 4	42	-777	6599	32.6	33.24	0.12
245	SLE FR 5	42	-796	6652	33.3	33.44	0.12
245	SLE FR 6	43	-812	6748	33.87	33.98	0.12
245	SLE QP 1	41	-760	6409	31.83	32.03	0.12
245	SLE QP 2	42	-791	6612	33.06	33.2	0.12
245	SLD 1	78	-794	7989	34.58	62.36	0.22
245	SLD 2	78	-794	7989	34.58	62.36	0.22
245	SLD 3	89	-1159	8268	46.53	71.84	0.25
245	SLD 4	89	-1159	8268	46.53	71.84	0.25
245	SLD 5	36	-237	6601	15.4	27.58	0.1
245	SLD 6	36	-237	6601	15.4	27.58	0.1
245	SLD 7	73	-1456	7533	55.22	59.16	0.21
245	SLD 8	73	-1456	7533	55.22	59.16	0.21
245	SLD 9	11	-126	5692	10.9	7.23	0.03
245	SLD 10	11	-126	5692	10.9	7.23	0.03
245	SLD 11	48	-1345	6623	50.72	38.82	0.14
245	SLD 12	48	-1345	6623	50.72	38.82	0.14
245	SLD 13	-5	-423	4957	19.59	-5.44	-0.01
245	SLD 14	-5	-423	4957	19.59	-5.44	-0.01
245	SLD 15	6	-789	5236	31.53	4.03	0.02
245	SLD 16	6	-789	5236	31.53	4.03	0.02
245	SLV 1	127	-799	9828	36.69	101.52	0.35
245	SLV 2	127	-799	9828	36.69	101.52	0.35
245	SLV 3	153	-1652	10497	64.61	124.06	0.43
245	SLV 4	153	-1652	10497	64.61	124.06	0.43
245	SLV 5	28	500	6562	-8.19	19.5	0.08
245	SLV 6	28	500	6562	-8.19	19.5	0.08
245	SLV 7	115	-2343	8792	84.86	94.65	0.33
245	SLV 8	115	-2343	8792	84.86	94.65	0.33
245	SLV 9	-31	761	4433	-18.75	-28.25	-0.08
245	SLV 10	-31	761	4433	-18.75	-28.25	-0.08
245	SLV 11	56	-2082	6663	74.31	46.89	0.16
245	SLV 12	56	-2082	6663	74.31	46.89	0.16
245	SLV 13	-69	70	2728	1.5	-57.67	-0.19
245	SLV 14	-69	70	2728	1.5	-57.67	-0.19
245	SLV 15	-43	-783	3397	29.42	-35.12	-0.11
245	SLV 16	-43	-783	3397	29.42	-35.12	-0.11
246	SLU 1	6	-464	6089	25.59	4.11	-0.01
246	SLU 2	5	-374	5983	21.16	3.12	-0.01
246	SLU 3	6	-476	6294	26.34	4.25	-0.01
246	SLU 4	6	-422	6231	23.69	3.65	-0.01
246	SLU 5	5	-379	6129	21.52	3.23	-0.01
246	SLU 6	6	-481	6440	26.7	4.36	-0.01

Nodo	Cont.	Reazione a traslazione			Reazione a rotazione		
Ind.	N.br.	x	y	z	x	y	z
246	SLU 7	6	-427	6377	24.04	3.76	-0.01
246	SLU 8	6	-473	6381	26.3	4.32	-0.01
246	SLU 9	6	-419	6318	23.64	3.73	-0.01
246	SLU 10	6	-455	6719	25.48	3.46	-0.01
246	SLU 11	7	-557	7030	30.66	4.59	-0.01
246	SLU 12	6	-503	6967	28.01	4	-0.01
246	SLU 13	6	-460	6865	25.84	3.57	-0.01
246	SLU 14	7	-562	7176	31.02	4.7	-0.01
246	SLU 15	7	-508	7113	28.36	4.11	-0.01
246	SLU 16	7	-554	7117	30.62	4.67	-0.01
246	SLU 17	6	-500	7054	27.97	4.07	-0.01
246	SLU 18	7	-580	7140	31.76	4.6	-0.01
246	SLU 19	6	-526	7077	29.1	4.01	-0.01
246	SLU 20	7	-584	7286	32.12	4.71	-0.01
246	SLU 21	7	-530	7223	29.46	4.11	-0.01
246	SLU 22	7	-539	6813	29.65	4.48	-0.01
246	SLU 23	6	-449	6708	25.22	3.49	-0.01
246	SLU 24	7	-551	7019	30.41	4.62	-0.01
246	SLU 25	6	-497	6955	27.75	4.03	-0.01
246	SLU 26	6	-454	6854	25.58	3.6	-0.01
246	SLU 27	7	-556	7165	30.76	4.73	-0.01
246	SLU 28	7	-502	7101	28.11	4.14	-0.01
246	SLU 29	7	-548	7106	30.36	4.7	-0.01
246	SLU 30	7	-494	7042	27.71	4.11	-0.01
246	SLU 31	6	-530	7444	29.54	3.84	-0.01
246	SLU 32	8	-632	7755	34.73	4.97	-0.01
246	SLU 33	7	-578	7691	32.07	4.38	-0.01
246	SLU 34	7	-535	7590	29.9	3.95	-0.01
246	SLU 35	8	-637	7901	35.08	5.08	-0.01
246	SLU 36	7	-583	7837	32.43	4.48	-0.01
246	SLU 37	8	-629	7841	34.69	5.04	-0.01
246	SLU 38	7	-575	7778	32.03	4.45	-0.01
246	SLU 39	8	-655	7865	35.82	4.98	-0.01
246	SLU 40	7	-601	7801	33.17	4.38	-0.01
246	SLU 41	8	-660	8011	36.18	5.08	-0.01
246	SLU 42	7	-606	7948	33.53	4.49	-0.01
246	SLU 43	8	-578	7667	31.87	5.21	-0.01
246	SLU 44	7	-488	7562	27.44	4.22	-0.01
246	SLU 45	8	-590	7872	32.62	5.35	-0.01
246	SLU 46	7	-536	7809	29.97	4.76	-0.01
246	SLU 47	7	-492	7708	27.8	4.33	-0.01
246	SLU 48	8	-594	8018	32.98	5.46	-0.01
246	SLU 49	7	-540	7955	30.32	4.87	-0.01
246	SLU 50	8	-586	7959	32.58	5.43	-0.01
246	SLU 51	7	-532	7896	29.93	4.83	-0.01
246	SLU 52	7	-569	8297	31.76	4.57	-0.01
246	SLU 53	8	-671	8608	36.95	5.7	-0.01
246	SLU 54	8	-617	8545	34.29	5.1	-0.01
246	SLU 55	8	-573	8444	32.12	4.67	-0.01
246	SLU 56	9	-675	8754	37.3	5.8	-0.01
246	SLU 57	8	-621	8691	34.65	5.21	-0.01
246	SLU 58	9	-668	8695	36.9	5.77	-0.01
246	SLU 59	8	-614	8632	34.25	5.18	-0.01
246	SLU 60	9	-693	8718	38.04	5.7	-0.01
246	SLU 61	8	-639	8655	35.39	5.11	-0.01
246	SLU 62	9	-698	8864	38.4	5.81	-0.01
246	SLU 63	8	-644	8801	35.74	5.22	-0.01
246	SLU 64	8	-653	8392	35.93	5.59	-0.01
246	SLU 65	7	-563	8286	31.51	4.6	-0.01
246	SLU 66	9	-665	8597	36.69	5.73	-0.01
246	SLU 67	8	-611	8534	34.03	5.13	-0.01
246	SLU 68	8	-567	8432	31.86	4.71	-0.01
246	SLU 69	9	-669	8743	37.04	5.84	-0.01
246	SLU 70	8	-615	8680	34.39	5.24	-0.01
246	SLU 71	9	-662	8684	36.65	5.8	-0.01
246	SLU 72	8	-608	8621	33.99	5.21	-0.01
246	SLU 73	8	-644	9022	35.83	4.94	-0.01
246	SLU 74	9	-746	9333	41.01	6.07	-0.01
246	SLU 75	9	-692	9269	38.35	5.48	-0.01
246	SLU 76	8	-648	9168	36.18	5.05	-0.01
246	SLU 77	9	-750	9479	41.37	6.18	-0.01
246	SLU 78	9	-696	9416	38.71	5.59	-0.01
246	SLU 79	9	-743	9420	40.97	6.15	-0.01
246	SLU 80	9	-689	9356	38.31	5.55	-0.01
246	SLU 81	9	-769	9443	42.11	6.08	-0.01
246	SLU 82	9	-715	9380	39.45	5.49	-0.01
246	SLU 83	9	-773	9589	42.46	6.19	-0.01
246	SLU 84	9	-719	9526	39.81	5.59	-0.01
246	SLE RA 1	6	-486	6296	26.75	4.21	-0.01
246	SLE RA 2	6	-426	6226	23.8	3.56	-0.01
246	SLE RA 3	6	-494	6433	27.25	4.31	-0.01
246	SLE RA 4	6	-458	6390	25.48	3.91	-0.01
246	SLE RA 5	6	-429	6323	24.03	3.63	-0.01
246	SLE RA 6	6	-497	6530	27.49	4.38	-0.01
246	SLE RA 7	6	-461	6488	25.72	3.98	-0.01
246	SLE RA 8	6	-492	6491	27.22	4.36	-0.01
246	SLE RA 9	6	-456	6448	25.45	3.96	-0.01
246	SLE RA 10	6	-480	6716	26.68	3.79	-0.01
246	SLE RA 11	7	-548	6923	30.13	4.54	-0.01
246	SLE RA 12	6	-512	6881	28.36	4.14	-0.01

Nodo	Cont.	Reazione a traslazione			Reazione a rotazione		
Ind.	N.br.	x	y	z	x	y	z
246	SLE RA 13	6	-483	6814	26.92	3.86	-0.01
246	SLE RA 14	7	-551	7021	30.37	4.61	-0.01
246	SLE RA 15	7	-515	6978	28.6	4.21	-0.01
246	SLE RA 16	7	-546	6981	30.1	4.59	-0.01
246	SLE RA 17	7	-510	6939	28.33	4.19	-0.01
246	SLE RA 18	7	-563	6997	30.86	4.54	-0.01
246	SLE RA 19	6	-527	6955	29.09	4.15	-0.01
246	SLE RA 20	7	-566	7094	31.1	4.62	-0.01
246	SLE RA 21	7	-530	7052	29.33	4.22	-0.01
246	SLE FR 1	6	-486	6296	26.75	4.21	-0.01
246	SLE FR 2	6	-474	6282	26.16	4.08	-0.01
246	SLE FR 3	6	-487	6335	26.84	4.24	-0.01
246	SLE FR 4	6	-497	6492	27.39	4.18	-0.01
246	SLE FR 5	6	-510	6545	28.08	4.34	-0.01
246	SLE FR 6	7	-524	6646	28.8	4.38	-0.01
246	SLE QP 1	6	-486	6296	26.75	4.21	-0.01
246	SLE QP 2	6	-509	6506	27.98	4.31	-0.01
246	SLD 1	25	-194	4730	11.69	21.92	-0.03
246	SLD 2	25	-194	4730	11.69	21.92	-0.03
246	SLD 3	29	-579	5067	30.3	26.49	-0.04
246	SLD 4	29	-579	5067	30.3	26.49	-0.04
246	SLD 5	5	170	5461	-5.13	2.67	-0.01
246	SLD 6	5	170	5461	-5.13	2.67	-0.01
246	SLD 7	20	-1114	6586	56.9	17.89	-0.03
246	SLD 8	20	-1114	6586	56.9	17.89	-0.03
246	SLD 9	-8	96	6426	-0.94	-9.27	0.01
246	SLD 10	-8	96	6426	-0.94	-9.27	0.01
246	SLD 11	8	-1188	7551	61.09	5.96	-0.01
246	SLD 12	8	-1188	7551	61.09	5.96	-0.01
246	SLD 13	-17	-439	7945	25.66	-17.86	0.02
246	SLD 14	-17	-439	7945	25.66	-17.86	0.02
246	SLD 15	-12	-824	8283	44.27	-13.3	0.02
246	SLD 16	-12	-824	8283	44.27	-13.3	0.02
246	SLV 1	50	229	2342	-10.18	46.57	-0.07
246	SLV 2	50	229	2342	-10.18	46.57	-0.07
246	SLV 3	61	-671	3143	33.33	57.66	-0.09
246	SLV 4	61	-671	3143	33.33	57.66	-0.09
246	SLV 5	2	1078	4043	-49.45	0.17	-0.01
246	SLV 6	2	1078	4043	-49.45	0.17	-0.01
246	SLV 7	40	-1923	6711	95.57	37.14	-0.05
246	SLV 8	40	-1923	6711	95.57	37.14	-0.05
246	SLV 9	-27	905	6301	-39.6	-28.51	0.04
246	SLV 10	-27	905	6301	-39.6	-28.51	0.04
246	SLV 11	11	-2096	8969	105.41	8.45	-0.01
246	SLV 12	11	-2096	8969	105.41	8.45	-0.01
246	SLV 13	-49	-347	9870	22.64	-49.04	0.07
246	SLV 14	-49	-347	9870	22.64	-49.04	0.07
246	SLV 15	-37	-1247	10670	66.14	-37.95	0.05
246	SLV 16	-37	-1247	10670	66.14	-37.95	0.05
247	SLU 1	24	-66	2721	-9.72	26.23	-0.01
247	SLU 2	24	-69	2695	-9.38	25.93	-0.01
247	SLU 3	25	-71	2804	-10.07	27.34	-0.01
247	SLU 4	25	-72	2789	-9.87	27.16	-0.01
247	SLU 5	25	-73	2752	-9.59	26.7	-0.01
247	SLU 6	26	-75	2861	-10.29	28.11	-0.01
247	SLU 7	26	-76	2846	-10.08	27.93	-0.01
247	SLU 8	26	-74	2835	-10.15	27.77	-0.01
247	SLU 9	25	-76	2819	-9.94	27.59	-0.01
247	SLU 10	28	-84	3026	-10.76	30.32	-0.01
247	SLU 11	29	-86	3135	-11.45	31.73	-0.02
247	SLU 12	29	-87	3119	-11.25	31.55	-0.02
247	SLU 13	29	-88	3082	-10.98	31.08	-0.01
247	SLU 14	30	-90	3191	-11.67	32.49	-0.02
247	SLU 15	30	-91	3176	-11.47	32.31	-0.02
247	SLU 16	30	-89	3165	-11.53	32.15	-0.02
247	SLU 17	29	-91	3149	-11.33	31.97	-0.02
247	SLU 18	30	-87	3193	-11.69	32.49	-0.02
247	SLU 19	30	-89	3177	-11.49	32.31	-0.02
247	SLU 20	31	-91	3250	-11.91	33.26	-0.02
247	SLU 21	30	-93	3234	-11.71	33.08	-0.02
247	SLU 22	28	-80	3048	-11.13	30.55	-0.01
247	SLU 23	28	-83	3022	-10.79	30.25	-0.01
247	SLU 24	29	-85	3131	-11.48	31.66	-0.02
247	SLU 25	29	-87	3116	-11.28	31.48	-0.02
247	SLU 26	29	-87	3079	-11.01	31.02	-0.01
247	SLU 27	30	-89	3188	-11.7	32.43	-0.02
247	SLU 28	30	-91	3172	-11.5	32.25	-0.02
247	SLU 29	30	-88	3161	-11.56	32.08	-0.02
247	SLU 30	29	-90	3146	-11.36	31.9	-0.02
247	SLU 31	32	-98	3352	-12.18	34.63	-0.02
247	SLU 32	33	-100	3461	-12.87	36.04	-0.02
247	SLU 33	33	-102	3446	-12.66	35.86	-0.02
247	SLU 34	33	-102	3409	-12.39	35.4	-0.02
247	SLU 35	34	-104	3518	-13.08	36.81	-0.02
247	SLU 36	34	-106	3503	-12.88	36.63	-0.02
247	SLU 37	34	-103	3492	-12.94	36.47	-0.02
247	SLU 38	33	-105	3476	-12.74	36.29	-0.02
247	SLU 39	34	-102	3520	-13.11	36.81	-0.02
247	SLU 40	34	-104	3504	-12.9	36.63	-0.02
247	SLU 41	35	-106	3576	-13.32	37.58	-0.02

Nodo	Cont.	Reazione a traslazione			Reazione a rotazione		
Ind.	N.br.	x	y	z	x	y	z
247	SLU 42	34	-108	3561	-13.12	37.4	-0.02
247	SLU 43	30	-80	3426	-12.15	32.62	-0.02
247	SLU 44	30	-83	3400	-11.81	32.32	-0.02
247	SLU 45	31	-85	3509	-12.5	33.73	-0.02
247	SLU 46	31	-87	3493	-12.3	33.55	-0.02
247	SLU 47	31	-88	3456	-12.02	33.09	-0.02
247	SLU 48	32	-89	3565	-12.72	34.5	-0.02
247	SLU 49	32	-91	3550	-12.51	34.32	-0.02
247	SLU 50	32	-89	3539	-12.58	34.16	-0.02
247	SLU 51	31	-90	3524	-12.38	33.98	-0.02
247	SLU 52	34	-98	3730	-13.19	36.71	-0.02
247	SLU 53	35	-100	3839	-13.89	38.12	-0.02
247	SLU 54	35	-102	3823	-13.68	37.94	-0.02
247	SLU 55	35	-103	3787	-13.41	37.47	-0.02
247	SLU 56	36	-104	3896	-14.1	38.88	-0.02
247	SLU 57	36	-106	3880	-13.9	38.7	-0.02
247	SLU 58	35	-104	3869	-13.96	38.54	-0.02
247	SLU 59	35	-105	3854	-13.76	38.36	-0.02
247	SLU 60	36	-102	3897	-14.12	38.88	-0.02
247	SLU 61	36	-104	3882	-13.92	38.7	-0.02
247	SLU 62	36	-106	3954	-14.34	39.65	-0.02
247	SLU 63	36	-108	3939	-14.14	39.47	-0.02
247	SLU 64	34	-95	3752	-13.56	36.94	-0.02
247	SLU 65	34	-98	3727	-13.22	36.64	-0.02
247	SLU 66	35	-100	3835	-13.91	38.05	-0.02
247	SLU 67	35	-102	3820	-13.71	37.87	-0.02
247	SLU 68	34	-102	3783	-13.44	37.41	-0.02
247	SLU 69	36	-104	3892	-14.13	38.82	-0.02
247	SLU 70	36	-106	3877	-13.93	38.64	-0.02
247	SLU 71	35	-103	3866	-13.99	38.47	-0.02
247	SLU 72	35	-105	3850	-13.79	38.29	-0.02
247	SLU 73	38	-113	4057	-14.61	41.02	-0.02
247	SLU 74	39	-115	4166	-15.3	42.43	-0.02
247	SLU 75	39	-117	4150	-15.09	42.25	-0.02
247	SLU 76	38	-117	4113	-14.82	41.79	-0.02
247	SLU 77	40	-119	4222	-15.51	43.2	-0.02
247	SLU 78	40	-121	4207	-15.31	43.02	-0.02
247	SLU 79	39	-118	4196	-15.37	42.86	-0.02
247	SLU 80	39	-120	4181	-15.17	42.68	-0.02
247	SLU 81	40	-116	4224	-15.54	43.2	-0.02
247	SLU 82	40	-118	4209	-15.33	43.02	-0.02
247	SLU 83	40	-120	4281	-15.75	43.97	-0.02
247	SLU 84	40	-122	4265	-15.55	43.79	-0.02
247	SLE RA 1	25	-70	2815	-10.12	27.47	-0.01
247	SLE RA 2	25	-72	2797	-9.89	27.27	-0.01
247	SLE RA 3	26	-73	2870	-10.36	28.21	-0.01
247	SLE RA 4	26	-74	2860	-10.22	28.09	-0.01
247	SLE RA 5	26	-75	2835	-10.04	27.78	-0.01
247	SLE RA 6	26	-76	2908	-10.5	28.72	-0.01
247	SLE RA 7	26	-77	2898	-10.36	28.6	-0.01
247	SLE RA 8	26	-75	2890	-10.41	28.49	-0.01
247	SLE RA 9	26	-76	2880	-10.27	28.37	-0.01
247	SLE RA 10	28	-82	3018	-10.82	30.19	-0.01
247	SLE RA 11	29	-83	3090	-11.28	31.13	-0.01
247	SLE RA 12	29	-84	3080	-11.14	31.01	-0.01
247	SLE RA 13	28	-85	3055	-10.96	30.7	-0.01
247	SLE RA 14	29	-86	3128	-11.42	31.64	-0.02
247	SLE RA 15	29	-87	3118	-11.29	31.52	-0.02
247	SLE RA 16	29	-85	3110	-11.33	31.41	-0.02
247	SLE RA 17	29	-86	3100	-11.2	31.29	-0.01
247	SLE RA 18	29	-84	3129	-11.44	31.64	-0.02
247	SLE RA 19	29	-85	3119	-11.3	31.52	-0.02
247	SLE RA 20	30	-87	3167	-11.58	32.15	-0.02
247	SLE RA 21	29	-88	3157	-11.45	32.03	-0.02
247	SLE FR 1	25	-70	2815	-10.12	27.47	-0.01
247	SLE FR 2	25	-70	2811	-10.07	27.43	-0.01
247	SLE FR 3	26	-71	2830	-10.18	27.67	-0.01
247	SLE FR 4	26	-75	2905	-10.47	28.68	-0.01
247	SLE FR 5	27	-75	2924	-10.57	28.92	-0.01
247	SLE FR 6	27	-77	2972	-10.78	29.55	-0.01
247	SLE QP 1	25	-70	2815	-10.12	27.47	-0.01
247	SLE QP 2	26	-74	2909	-10.51	28.72	-0.01
247	SLD 1	38	-60	3443	-12.9	40.3	-0.02
247	SLD 2	38	-60	3443	-12.9	40.3	-0.02
247	SLD 3	42	-532	3068	10.89	43.96	-0.02
247	SLD 4	42	-532	3068	10.89	43.96	-0.02
247	SLD 5	25	645	3637	-47.31	26.65	-0.02
247	SLD 6	25	645	3637	-47.31	26.65	-0.02
247	SLD 7	36	-926	2389	31.99	38.84	-0.01
247	SLD 8	36	-926	2389	31.99	38.84	-0.01
247	SLD 9	17	778	3429	-53.02	18.6	-0.01
247	SLD 10	17	778	3429	-53.02	18.6	-0.01
247	SLD 11	28	-793	2181	26.28	30.79	-0.01
247	SLD 12	28	-793	2181	26.28	30.79	-0.01
247	SLD 13	11	383	2750	-31.92	13.47	-0.01
247	SLD 14	11	383	2750	-31.92	13.47	-0.01
247	SLD 15	15	-88	2375	-8.13	17.13	-0.01
247	SLD 16	15	-88	2375	-8.13	17.13	-0.01
247	SLV 1	54	-35	4176	-16.39	55.86	-0.02
247	SLV 2	54	-35	4176	-16.39	55.86	-0.02

Nodo	Cont.	Reazione a traslazione			Reazione a rotazione		
Ind.	N.br.	x	y	z	x	y	z
247	SLV 3	62	-1165	3275	40.64	64.71	-0.02
247	SLV 4	62	-1165	3275	40.64	64.71	-0.02
247	SLV 5	22	1651	4656	-98.76	23.44	-0.02
247	SLV 6	22	1651	4656	-98.76	23.44	-0.02
247	SLV 7	50	-2114	1652	91.31	52.94	-0.01
247	SLV 8	50	-2114	1652	91.31	52.94	-0.01
247	SLV 9	3	1966	4166	-112.34	4.5	-0.02
247	SLV 10	3	1966	4166	-112.34	4.5	-0.02
247	SLV 11	31	-1799	1162	77.73	34	-0.01
247	SLV 12	31	-1799	1162	77.73	34	-0.01
247	SLV 13	-10	1016	2543	-61.66	-7.27	-0.01
247	SLV 14	-10	1016	2543	-61.66	-7.27	-0.01
247	SLV 15	-1	-113	1642	-4.64	1.58	0
247	SLV 16	-1	-113	1642	-4.64	1.58	0
248	SLU 1	469	33	5036	5.3	34.24	0.01
248	SLU 2	468	34	5028	5.27	34.17	0.02
248	SLU 3	485	32	5196	5.59	35.52	0.02
248	SLU 4	484	33	5191	5.58	35.48	0.02
248	SLU 5	478	33	5127	5.47	34.96	0.02
248	SLU 6	494	32	5295	5.79	36.3	0.02
248	SLU 7	494	32	5290	5.78	36.26	0.02
248	SLU 8	488	32	5234	5.7	35.81	0.02
248	SLU 9	488	32	5229	5.69	35.77	0.02
248	SLU 10	545	31	5802	6.28	40.52	0.02
248	SLU 11	562	30	5970	6.6	41.86	0.02
248	SLU 12	561	30	5965	6.59	41.82	0.02
248	SLU 13	555	31	5901	6.48	41.3	0.02
248	SLU 14	572	29	6069	6.8	42.65	0.02
248	SLU 15	571	30	6064	6.79	42.61	0.02
248	SLU 16	566	30	6008	6.71	42.16	0.02
248	SLU 17	565	30	6003	6.69	42.12	0.02
248	SLU 18	579	29	6141	6.73	43.31	0.02
248	SLU 19	579	30	6136	6.72	43.27	0.02
248	SLU 20	589	29	6240	6.94	44.09	0.02
248	SLU 21	588	29	6235	6.92	44.05	0.02
248	SLU 22	542	31	5768	6.3	40.2	0.02
248	SLU 23	541	31	5761	6.28	40.13	0.02
248	SLU 24	558	30	5929	6.6	41.47	0.02
248	SLU 25	557	31	5924	6.59	41.43	0.02
248	SLU 26	551	31	5860	6.48	40.91	0.02
248	SLU 27	568	30	6028	6.8	42.26	0.02
248	SLU 28	567	30	6023	6.79	42.21	0.02
248	SLU 29	561	30	5967	6.71	41.76	0.02
248	SLU 30	561	30	5962	6.7	41.72	0.02
248	SLU 31	618	29	6534	7.29	46.47	0.02
248	SLU 32	635	28	6702	7.61	47.82	0.02
248	SLU 33	634	28	6698	7.59	47.78	0.02
248	SLU 34	628	29	6633	7.49	47.26	0.02
248	SLU 35	645	27	6802	7.81	48.6	0.02
248	SLU 36	644	28	6797	7.8	48.56	0.02
248	SLU 37	639	27	6740	7.72	48.11	0.02
248	SLU 38	638	28	6736	7.7	48.07	0.02
248	SLU 39	652	27	6874	7.74	49.26	0.02
248	SLU 40	652	28	6869	7.73	49.22	0.02
248	SLU 41	662	27	6973	7.95	50.04	0.02
248	SLU 42	662	27	6968	7.93	50	0.02
248	SLU 43	584	43	6295	6.54	42.48	0.02
248	SLU 44	583	44	6287	6.52	42.41	0.02
248	SLU 45	600	43	6455	6.83	43.75	0.02
248	SLU 46	600	43	6451	6.82	43.71	0.02
248	SLU 47	593	44	6387	6.72	43.19	0.02
248	SLU 48	610	42	6555	7.04	44.54	0.02
248	SLU 49	610	43	6550	7.02	44.49	0.02
248	SLU 50	604	43	6494	6.94	44.04	0.02
248	SLU 51	603	43	6489	6.93	44	0.02
248	SLU 52	661	42	7061	7.52	48.75	0.02
248	SLU 53	677	40	7229	7.84	50.1	0.02
248	SLU 54	677	41	7224	7.83	50.06	0.02
248	SLU 55	671	41	7160	7.72	49.54	0.02
248	SLU 56	687	40	7328	8.04	50.88	0.02
248	SLU 57	687	40	7324	8.03	50.84	0.02
248	SLU 58	681	40	7267	7.95	50.39	0.02
248	SLU 59	681	40	7263	7.94	50.35	0.02
248	SLU 60	695	40	7400	7.98	51.54	0.02
248	SLU 61	694	40	7396	7.96	51.5	0.02
248	SLU 62	704	39	7500	8.18	52.33	0.02
248	SLU 63	704	40	7495	8.17	52.28	0.02
248	SLU 64	657	41	7028	7.55	48.43	0.02
248	SLU 65	656	42	7020	7.52	48.36	0.02
248	SLU 66	673	41	7188	7.84	49.7	0.02
248	SLU 67	673	41	7183	7.83	49.66	0.02
248	SLU 68	666	42	7119	7.73	49.14	0.02
248	SLU 69	683	40	7287	8.05	50.49	0.02
248	SLU 70	683	41	7283	8.03	50.45	0.02
248	SLU 71	677	40	7226	7.95	50	0.02
248	SLU 72	676	41	7222	7.94	49.96	0.02
248	SLU 73	734	40	7794	8.53	54.7	0.02
248	SLU 74	751	38	7962	8.85	56.05	0.02
248	SLU 75	750	39	7957	8.84	56.01	0.02
248	SLU 76	744	39	7893	8.73	55.49	0.02

Nodo	Cont.	Reazione a traslazione			Reazione a rotazione		
Ind.	N.br.	x	y	z	x	y	z
248	SLU 77	760	38	8061	9.05	56.83	0.02
248	SLU 78	760	38	8056	9.04	56.79	0.02
248	SLU 79	754	38	8000	8.96	56.34	0.02
248	SLU 80	754	38	7995	8.95	56.3	0.02
248	SLU 81	768	38	8133	8.99	57.49	0.02
248	SLU 82	767	38	8128	8.97	57.45	0.02
248	SLU 83	778	37	8232	9.19	58.28	0.02
248	SLU 84	777	38	8228	9.17	58.24	0.02
248	SLE RA 1	490	32	5245	5.58	35.94	0.02
248	SLE RA 2	489	33	5240	5.57	35.9	0.02
248	SLE RA 3	500	32	5352	5.78	36.79	0.02
248	SLE RA 4	500	32	5349	5.77	36.77	0.02
248	SLE RA 5	496	32	5306	5.7	36.42	0.02
248	SLE RA 6	507	31	5418	5.92	37.32	0.02
248	SLE RA 7	506	32	5415	5.91	37.29	0.02
248	SLE RA 8	503	32	5377	5.85	36.99	0.02
248	SLE RA 9	502	32	5374	5.84	36.96	0.02
248	SLE RA 10	540	31	5756	6.24	40.13	0.02
248	SLE RA 11	552	30	5868	6.45	41.02	0.02
248	SLE RA 12	551	30	5865	6.44	41	0.02
248	SLE RA 13	547	31	5822	6.37	40.65	0.02
248	SLE RA 14	558	30	5934	6.59	41.55	0.02
248	SLE RA 15	558	30	5931	6.58	41.52	0.02
248	SLE RA 16	554	30	5893	6.52	41.22	0.02
248	SLE RA 17	554	30	5890	6.52	41.19	0.02
248	SLE RA 18	563	30	5982	6.54	41.99	0.02
248	SLE RA 19	563	30	5979	6.53	41.96	0.02
248	SLE RA 20	570	30	6048	6.68	42.51	0.02
248	SLE RA 21	569	30	6045	6.67	42.48	0.02
248	SLE FR 1	490	32	5245	5.58	35.94	0.02
248	SLE FR 2	489	32	5244	5.58	35.93	0.02
248	SLE FR 3	492	32	5271	5.64	36.15	0.02
248	SLE FR 4	511	32	5465	5.87	37.75	0.02
248	SLE FR 5	514	31	5493	5.93	37.97	0.02
248	SLE FR 6	526	31	5613	6.06	38.97	0.02
248	SLE QP 1	490	32	5245	5.58	35.94	0.02
248	SLE QP 2	512	32	5466	5.87	37.76	0.02
248	SLD 1	593	137	6454	0.26	46.62	0.04
248	SLD 2	593	137	6454	0.26	46.62	0.04
248	SLD 3	556	-193	5742	18.69	45.8	0
248	SLD 4	556	-193	5742	18.69	45.8	0
248	SLD 5	593	564	6842	-23.77	41.66	0.08
248	SLD 6	593	564	6842	-23.77	41.66	0.08
248	SLD 7	468	-537	4469	37.67	38.93	-0.05
248	SLD 8	468	-537	4469	37.67	38.93	-0.05
248	SLD 9	555	600	6463	-25.93	36.59	0.08
248	SLD 10	555	600	6463	-25.93	36.59	0.08
248	SLD 11	430	-501	4090	35.51	33.85	-0.05
248	SLD 12	430	-501	4090	35.51	33.85	-0.05
248	SLD 13	467	256	5190	-6.95	29.71	0.03
248	SLD 14	467	256	5190	-6.95	29.71	0.03
248	SLD 15	430	-74	4478	11.48	28.89	-0.01
248	SLD 16	430	-74	4478	11.48	28.89	-0.01
248	SLV 1	705	285	7806	-7.7	58.52	0.08
248	SLV 2	705	285	7806	-7.7	58.52	0.08
248	SLV 3	614	-510	6088	36.74	56.54	-0.01
248	SLV 4	614	-510	6088	36.74	56.54	-0.01
248	SLV 5	706	1313	8773	-65.61	46.99	0.18
248	SLV 6	706	1313	8773	-65.61	46.99	0.18
248	SLV 7	406	-1337	3047	82.54	40.39	-0.14
248	SLV 8	406	-1337	3047	82.54	40.39	-0.14
248	SLV 9	618	1400	7885	-70.8	35.12	0.17
248	SLV 10	618	1400	7885	-70.8	35.12	0.17
248	SLV 11	317	-1250	2159	77.35	28.53	-0.15
248	SLV 12	317	-1250	2159	77.35	28.53	-0.15
248	SLV 13	409	573	4844	-25	18.97	0.05
248	SLV 14	409	573	4844	-25	18.97	0.05
248	SLV 15	319	-222	3126	19.45	16.99	-0.05
248	SLV 16	319	-222	3126	19.45	16.99	-0.05
249	SLU 1	19	-2	308	0.16	-0.89	0.04
249	SLU 2	19	-2	308	0.16	-0.88	0.04
249	SLU 3	20	-2	315	0.17	-1.02	0.04
249	SLU 4	20	-2	315	0.17	-1.01	0.04
249	SLU 5	20	-2	313	0.17	-0.97	0.04
249	SLU 6	21	-2	320	0.17	-1.11	0.04
249	SLU 7	21	-2	320	0.17	-1.1	0.04
249	SLU 8	20	-2	318	0.17	-1.07	0.04
249	SLU 9	20	-2	318	0.17	-1.07	0.04
249	SLU 10	40	-2	297	0.19	-0.51	0.05
249	SLU 11	41	-2	304	0.2	-0.65	0.05
249	SLU 12	41	-2	304	0.19	-0.64	0.05
249	SLU 13	40	-2	302	0.19	-0.6	0.05
249	SLU 14	41	-2	309	0.2	-0.74	0.05
249	SLU 15	41	-2	309	0.2	-0.73	0.05
249	SLU 16	41	-2	307	0.2	-0.7	0.05
249	SLU 17	41	-2	307	0.2	-0.7	0.05
249	SLU 18	49	-2	292	0.2	-0.36	0.05
249	SLU 19	48	-2	292	0.2	-0.36	0.05
249	SLU 20	49	-2	297	0.2	-0.45	0.05
249	SLU 21	49	-2	297	0.2	-0.45	0.05

Nodo	Cont.	Reazione a traslazione			Reazione a rotazione		
Ind.	N.br.	x	y	z	x	y	z
249	SLU 22	35	-2	308	0.19	-0.76	0.05
249	SLU 23	35	-2	308	0.19	-0.75	0.05
249	SLU 24	36	-2	315	0.19	-0.89	0.05
249	SLU 25	36	-2	315	0.19	-0.88	0.05
249	SLU 26	35	-2	313	0.19	-0.84	0.05
249	SLU 27	36	-2	320	0.2	-0.98	0.05
249	SLU 28	36	-2	320	0.2	-0.97	0.05
249	SLU 29	36	-2	318	0.2	-0.94	0.05
249	SLU 30	36	-2	318	0.2	-0.94	0.05
249	SLU 31	55	-2	297	0.21	-0.39	0.05
249	SLU 32	56	-2	304	0.22	-0.52	0.05
249	SLU 33	56	-2	304	0.22	-0.51	0.05
249	SLU 34	56	-2	302	0.22	-0.48	0.05
249	SLU 35	57	-2	309	0.23	-0.61	0.05
249	SLU 36	57	-2	309	0.22	-0.6	0.05
249	SLU 37	56	-2	307	0.22	-0.57	0.05
249	SLU 38	56	-2	307	0.22	-0.57	0.05
249	SLU 39	64	-2	293	0.22	-0.23	0.05
249	SLU 40	64	-2	292	0.22	-0.23	0.05
249	SLU 41	64	-2	298	0.23	-0.32	0.06
249	SLU 42	64	-2	297	0.23	-0.32	0.06
249	SLU 43	20	-2	400	0.2	-1.2	0.05
249	SLU 44	20	-2	400	0.2	-1.19	0.05
249	SLU 45	21	-2	407	0.21	-1.33	0.05
249	SLU 46	21	-2	407	0.21	-1.32	0.05
249	SLU 47	20	-2	405	0.21	-1.28	0.05
249	SLU 48	21	-2	412	0.22	-1.42	0.05
249	SLU 49	21	-2	412	0.21	-1.41	0.05
249	SLU 50	21	-2	410	0.21	-1.38	0.05
249	SLU 51	21	-2	410	0.21	-1.38	0.05
249	SLU 52	40	-2	389	0.23	-0.82	0.06
249	SLU 53	41	-3	396	0.24	-0.96	0.06
249	SLU 54	41	-3	396	0.24	-0.95	0.06
249	SLU 55	41	-2	394	0.23	-0.91	0.06
249	SLU 56	42	-3	401	0.24	-1.05	0.06
249	SLU 57	42	-3	401	0.24	-1.04	0.06
249	SLU 58	41	-3	399	0.24	-1.01	0.06
249	SLU 59	41	-3	399	0.24	-1.01	0.06
249	SLU 60	49	-3	385	0.24	-0.67	0.06
249	SLU 61	49	-3	385	0.24	-0.67	0.06
249	SLU 62	49	-3	390	0.24	-0.76	0.06
249	SLU 63	49	-3	390	0.24	-0.76	0.06
249	SLU 64	36	-2	401	0.23	-1.07	0.06
249	SLU 65	35	-2	400	0.23	-1.07	0.06
249	SLU 66	37	-3	407	0.23	-1.2	0.06
249	SLU 67	36	-3	407	0.23	-1.19	0.06
249	SLU 68	36	-2	405	0.23	-1.16	0.06
249	SLU 69	37	-3	412	0.24	-1.29	0.06
249	SLU 70	37	-3	412	0.24	-1.28	0.06
249	SLU 71	36	-3	411	0.24	-1.25	0.06
249	SLU 72	36	-3	410	0.24	-1.25	0.06
249	SLU 73	56	-3	389	0.25	-0.7	0.06
249	SLU 74	57	-3	396	0.26	-0.83	0.06
249	SLU 75	57	-3	396	0.26	-0.82	0.06
249	SLU 76	56	-3	394	0.26	-0.79	0.06
249	SLU 77	57	-3	401	0.27	-0.92	0.06
249	SLU 78	57	-3	401	0.27	-0.91	0.06
249	SLU 79	57	-3	400	0.26	-0.88	0.06
249	SLU 80	57	-3	399	0.26	-0.88	0.06
249	SLU 81	65	-3	385	0.26	-0.55	0.06
249	SLU 82	65	-3	385	0.26	-0.54	0.06
249	SLU 83	65	-3	390	0.27	-0.64	0.07
249	SLU 84	65	-3	390	0.27	-0.63	0.07
249	SLE RA 1	24	-2	308	0.17	-0.85	0.04
249	SLE RA 2	24	-2	308	0.17	-0.85	0.04
249	SLE RA 3	25	-2	313	0.17	-0.94	0.04
249	SLE RA 4	25	-2	313	0.17	-0.93	0.04
249	SLE RA 5	24	-2	311	0.17	-0.91	0.04
249	SLE RA 6	25	-2	316	0.18	-1	0.04
249	SLE RA 7	25	-2	316	0.18	-0.99	0.04
249	SLE RA 8	24	-2	315	0.18	-0.97	0.04
249	SLE RA 9	24	-2	315	0.18	-0.97	0.04
249	SLE RA 10	37	-2	301	0.19	-0.6	0.05
249	SLE RA 11	38	-2	305	0.19	-0.69	0.05
249	SLE RA 12	38	-2	305	0.19	-0.69	0.05
249	SLE RA 13	38	-2	304	0.19	-0.66	0.05
249	SLE RA 14	38	-2	309	0.19	-0.75	0.05
249	SLE RA 15	38	-2	309	0.19	-0.75	0.05
249	SLE RA 16	38	-2	307	0.19	-0.73	0.05
249	SLE RA 17	38	-2	307	0.19	-0.72	0.05
249	SLE RA 18	43	-2	298	0.19	-0.5	0.05
249	SLE RA 19	43	-2	298	0.19	-0.5	0.05
249	SLE RA 20	44	-2	301	0.2	-0.56	0.05
249	SLE RA 21	43	-2	301	0.2	-0.56	0.05
249	SLE FR 1	24	-2	308	0.17	-0.85	0.04
249	SLE FR 2	24	-2	308	0.17	-0.85	0.04
249	SLE FR 3	24	-2	309	0.17	-0.88	0.04
249	SLE FR 4	30	-2	305	0.18	-0.75	0.04
249	SLE FR 5	30	-2	306	0.18	-0.77	0.04
249	SLE FR 6	34	-2	303	0.18	-0.68	0.04

Nodo	Cont.	Reazione a traslazione			Reazione a rotazione		
Ind.	N.br.	x	y	z	x	y	z
249	SLE QP 1	24	-2	308	0.17	-0.85	0.04
249	SLE QP 2	30	-2	305	0.18	-0.75	0.04
249	SLD 1	103	8	91	-0.92	2.32	-0.24
249	SLD 2	103	8	91	-0.92	2.32	-0.24
249	SLD 3	151	2	-112	-0.16	3.11	-0.05
249	SLD 4	151	2	-112	-0.16	3.11	-0.05
249	SLD 5	-22	10	549	-1.3	-1.03	-0.34
249	SLD 6	-22	10	549	-1.3	-1.03	-0.34
249	SLD 7	140	-10	-128	1.23	1.61	0.31
249	SLD 8	140	-10	-128	1.23	1.61	0.31
249	SLD 9	-81	6	738	-0.87	-3.11	-0.23
249	SLD 10	-81	6	738	-0.87	-3.11	-0.23
249	SLD 11	82	-14	61	1.66	-0.47	0.43
249	SLD 12	82	-14	61	1.66	-0.47	0.43
249	SLD 13	-92	-5	722	0.52	-4.61	0.13
249	SLD 14	-92	-5	722	0.52	-4.61	0.13
249	SLD 15	-43	-11	519	1.27	-3.81	0.33
249	SLD 16	-43	-11	519	1.27	-3.81	0.33
249	SLV 1	198	21	-186	-2.44	6.37	-0.64
249	SLV 2	198	21	-186	-2.44	6.37	-0.64
249	SLV 3	316	6	-677	-0.57	8.29	-0.16
249	SLV 4	316	6	-677	-0.57	8.29	-0.16
249	SLV 5	-99	27	902	-3.43	-1.53	-0.89
249	SLV 6	-99	27	902	-3.43	-1.53	-0.89
249	SLV 7	295	-22	-734	2.78	4.88	0.71
249	SLV 8	295	-22	-734	2.78	4.88	0.71
249	SLV 9	-235	18	1344	-2.42	-6.38	-0.63
249	SLV 10	-235	18	1344	-2.42	-6.38	-0.63
249	SLV 11	158	-31	-292	3.79	0.03	0.98
249	SLV 12	158	-31	-292	3.79	0.03	0.98
249	SLV 13	-257	-10	1287	0.93	-9.79	0.24
249	SLV 14	-257	-10	1287	0.93	-9.79	0.24
249	SLV 15	-139	-24	796	2.79	-7.87	0.73
249	SLV 16	-139	-24	796	2.79	-7.87	0.73
250	SLU 1	841	0	3558	-0.06	14.6	0.01
250	SLU 2	840	0	3553	-0.06	14.59	0.01
250	SLU 3	866	0	3669	-0.06	14.95	0.01
250	SLU 4	865	0	3666	-0.06	14.95	0.01
250	SLU 5	855	0	3619	-0.06	14.78	0.01
250	SLU 6	881	0	3735	-0.06	15.14	0.01
250	SLU 7	880	0	3731	-0.06	15.14	0.01
250	SLU 8	871	0	3690	-0.06	14.98	0.01
250	SLU 9	870	0	3687	-0.06	14.98	0.01
250	SLU 10	1004	0	4229	-0.06	17.75	0.01
250	SLU 11	1031	0	4345	-0.06	18.11	0.01
250	SLU 12	1030	0	4342	-0.06	18.1	0.01
250	SLU 13	1019	0	4295	-0.06	17.94	0.01
250	SLU 14	1045	0	4411	-0.06	18.3	0.01
250	SLU 15	1045	0	4408	-0.07	18.29	0.01
250	SLU 16	1035	0	4366	-0.06	18.14	0.01
250	SLU 17	1034	0	4363	-0.06	18.13	0.01
250	SLU 18	1076	0	4524	-0.07	19.11	0.01
250	SLU 19	1075	0	4521	-0.07	19.1	0.01
250	SLU 20	1091	0	4590	-0.07	19.3	0.01
250	SLU 21	1090	0	4587	-0.07	19.3	0.01
250	SLU 22	987	0	4164	-0.06	17.25	0.01
250	SLU 23	985	0	4159	-0.07	17.24	0.01
250	SLU 24	1012	0	4275	-0.07	17.6	0.01
250	SLU 25	1011	0	4272	-0.07	17.59	0.01
250	SLU 26	1000	0	4225	-0.07	17.43	0.01
250	SLU 27	1026	0	4341	-0.07	17.79	0.01
250	SLU 28	1026	0	4338	-0.07	17.78	0.01
250	SLU 29	1016	0	4296	-0.07	17.63	0.01
250	SLU 30	1015	0	4293	-0.07	17.62	0.01
250	SLU 31	1150	0	4835	-0.07	20.39	0.01
250	SLU 32	1176	0	4951	-0.07	20.76	0.01
250	SLU 33	1176	0	4948	-0.07	20.75	0.01
250	SLU 34	1165	0	4901	-0.07	20.59	0.01
250	SLU 35	1191	0	5017	-0.07	20.95	0.01
250	SLU 36	1190	0	5014	-0.07	20.94	0.01
250	SLU 37	1181	0	4972	-0.07	20.79	0.01
250	SLU 38	1180	0	4969	-0.07	20.78	0.01
250	SLU 39	1222	0	5130	-0.07	21.76	0.01
250	SLU 40	1221	0	5127	-0.07	21.75	0.01
250	SLU 41	1236	0	5196	-0.07	21.95	0.01
250	SLU 42	1236	0	5193	-0.07	21.94	0.01
250	SLU 43	1043	0	4418	-0.07	18.08	0.01
250	SLU 44	1042	0	4413	-0.07	18.06	0.01
250	SLU 45	1068	0	4528	-0.07	18.43	0.01
250	SLU 46	1068	0	4525	-0.07	18.42	0.01
250	SLU 47	1057	0	4479	-0.07	18.25	0.01
250	SLU 48	1083	0	4594	-0.07	18.62	0.01
250	SLU 49	1083	0	4591	-0.07	18.61	0.01
250	SLU 50	1073	0	4550	-0.07	18.46	0.01
250	SLU 51	1072	0	4547	-0.07	18.45	0.01
250	SLU 52	1207	0	5089	-0.08	21.22	0.01
250	SLU 53	1233	0	5205	-0.08	21.58	0.01
250	SLU 54	1232	0	5201	-0.08	21.58	0.01
250	SLU 55	1222	0	5155	-0.08	21.41	0.01
250	SLU 56	1248	0	5271	-0.08	21.77	0.01

Nodo	Cont.	Reazione a traslazione			Reazione a rotazione		
Ind.	N.br.	x	y	z	x	y	z
250	SLU 57	1247	0	5267	-0.08	21.77	0.01
250	SLU 58	1238	0	5226	-0.08	21.61	0.01
250	SLU 59	1237	0	5223	-0.08	21.61	0.01
250	SLU 60	1278	0	5384	-0.08	22.59	0.01
250	SLU 61	1278	0	5381	-0.08	22.58	0.01
250	SLU 62	1293	0	5450	-0.08	22.78	0.01
250	SLU 63	1293	0	5447	-0.08	22.77	0.01
250	SLU 64	1189	0	5024	-0.08	20.72	0.01
250	SLU 65	1188	0	5019	-0.08	20.71	0.01
250	SLU 66	1214	0	5134	-0.08	21.07	0.01
250	SLU 67	1213	0	5131	-0.08	21.07	0.01
250	SLU 68	1203	0	5085	-0.08	20.9	0.01
250	SLU 69	1229	0	5200	-0.08	21.26	0.01
250	SLU 70	1228	0	5197	-0.08	21.26	0.01
250	SLU 71	1219	0	5156	-0.08	21.1	0.01
250	SLU 72	1218	0	5153	-0.08	21.1	0.01
250	SLU 73	1352	0	5695	-0.09	23.87	0.01
250	SLU 74	1379	0	5811	-0.09	24.23	0.01
250	SLU 75	1378	0	5808	-0.09	24.22	0.01
250	SLU 76	1367	0	5761	-0.09	24.06	0.01
250	SLU 77	1393	0	5877	-0.09	24.42	0.01
250	SLU 78	1393	0	5873	-0.09	24.41	0.01
250	SLU 79	1383	0	5832	-0.09	24.26	0.01
250	SLU 80	1382	0	5829	-0.09	24.25	0.01
250	SLU 81	1424	0	5990	-0.09	25.23	0.01
250	SLU 82	1423	0	5987	-0.09	25.23	0.01
250	SLU 83	1439	0	6056	-0.09	25.42	0.01
250	SLU 84	1438	0	6053	-0.09	25.42	0.01
250	SLE RA 1	883	0	3731	-0.06	15.36	0.01
250	SLE RA 2	882	0	3728	-0.06	15.35	0.01
250	SLE RA 3	899	0	3805	-0.06	15.59	0.01
250	SLE RA 4	899	0	3803	-0.06	15.59	0.01
250	SLE RA 5	892	0	3772	-0.06	15.48	0.01
250	SLE RA 6	909	0	3849	-0.06	15.72	0.01
250	SLE RA 7	909	0	3847	-0.06	15.71	0.01
250	SLE RA 8	902	0	3819	-0.06	15.61	0.01
250	SLE RA 9	902	0	3817	-0.06	15.61	0.01
250	SLE RA 10	991	0	4179	-0.06	17.46	0.01
250	SLE RA 11	1009	0	4256	-0.06	17.7	0.01
250	SLE RA 12	1009	0	4254	-0.06	17.69	0.01
250	SLE RA 13	1001	0	4223	-0.06	17.58	0.01
250	SLE RA 14	1019	0	4300	-0.06	17.82	0.01
250	SLE RA 15	1018	0	4298	-0.06	17.82	0.01
250	SLE RA 16	1012	0	4270	-0.06	17.72	0.01
250	SLE RA 17	1012	0	4268	-0.06	17.71	0.01
250	SLE RA 18	1039	0	4375	-0.06	18.37	0.01
250	SLE RA 19	1039	0	4373	-0.06	18.36	0.01
250	SLE RA 20	1049	0	4419	-0.06	18.49	0.01
250	SLE RA 21	1049	0	4417	-0.07	18.49	0.01
250	SLE FR 1	883	0	3731	-0.06	15.36	0.01
250	SLE FR 2	882	0	3731	-0.06	15.36	0.01
250	SLE FR 3	886	0	3749	-0.06	15.41	0.01
250	SLE FR 4	929	0	3924	-0.06	16.26	0.01
250	SLE FR 5	933	0	3942	-0.06	16.31	0.01
250	SLE FR 6	961	0	4053	-0.06	16.86	0.01
250	SLE QP 1	883	0	3731	-0.06	15.36	0.01
250	SLE QP 2	930	0	3925	-0.06	16.26	0.01
250	SLD 1	1245	-11	4907	-3.29	27.07	0.48
250	SLD 2	1245	-11	4907	-3.29	27.07	0.48
250	SLD 3	1216	6	4783	0.42	26.48	0
250	SLD 4	1216	6	4783	0.42	26.48	0
250	SLD 5	1069	-30	4407	-6.65	20.41	0.88
250	SLD 6	1069	-30	4407	-6.65	20.41	0.88
250	SLD 7	971	28	3995	5.7	18.42	-0.72
250	SLD 8	971	28	3995	5.7	18.42	-0.72
250	SLD 9	888	-28	3854	-5.82	14.1	0.74
250	SLD 10	888	-28	3854	-5.82	14.1	0.74
250	SLD 11	790	30	3442	6.53	12.11	-0.86
250	SLD 12	790	30	3442	6.53	12.11	-0.86
250	SLD 13	643	-6	3066	-0.54	6.04	0.02
250	SLD 14	643	-6	3066	-0.54	6.04	0.02
250	SLD 15	614	11	2942	3.17	5.45	-0.46
250	SLD 16	614	11	2942	3.17	5.45	-0.46
250	SLV 1	1668	-28	6223	-8.15	41.5	1.17
250	SLV 2	1668	-28	6223	-8.15	41.5	1.17
250	SLV 3	1597	16	5926	1.22	40.09	-0.03
250	SLV 4	1597	16	5926	1.22	40.09	-0.03
250	SLV 5	1258	-76	5064	-16.7	25.97	2.18
250	SLV 6	1258	-76	5064	-16.7	25.97	2.18
250	SLV 7	1023	72	4075	14.54	21.27	-1.82
250	SLV 8	1023	72	4075	14.54	21.27	-1.82
250	SLV 9	836	-72	3774	-14.66	11.25	1.84
250	SLV 10	836	-72	3774	-14.66	11.25	1.84
250	SLV 11	601	76	2785	16.58	6.55	-2.16
250	SLV 12	601	76	2785	16.58	6.55	-2.16
250	SLV 13	262	-16	1923	-1.34	-7.57	0.05
250	SLV 14	262	-16	1923	-1.34	-7.57	0.05
250	SLV 15	192	28	1626	8.03	-8.98	-1.15
250	SLV 16	192	28	1626	8.03	-8.98	-1.15
251	SLU 1	615	0	5867	-0.12	47.59	0

Nodo	Cont.	Reazione a traslazione			Reazione a rotazione		
Ind.	N.br.	x	y	z	x	y	z
251	SLU 2	614	0	5858	-0.12	47.52	0
251	SLU 3	634	0	6050	-0.12	49.14	0
251	SLU 4	633	0	6045	-0.12	49.09	0
251	SLU 5	625	0	5968	-0.12	48.44	0
251	SLU 6	645	0	6160	-0.12	50.06	0
251	SLU 7	644	0	6155	-0.13	50.02	0
251	SLU 8	637	0	6087	-0.12	49.43	0
251	SLU 9	636	0	6082	-0.12	49.39	0
251	SLU 10	737	0	6956	-0.13	56.7	0
251	SLU 11	756	0	7148	-0.13	58.33	0
251	SLU 12	756	0	7143	-0.14	58.28	0
251	SLU 13	748	0	7066	-0.13	57.63	0
251	SLU 14	767	0	7258	-0.13	59.25	0
251	SLU 15	767	0	7253	-0.14	59.2	0
251	SLU 16	760	0	7185	-0.13	58.62	0
251	SLU 17	759	0	7180	-0.13	58.58	0
251	SLU 18	790	0	7435	-0.14	60.72	0
251	SLU 19	790	0	7430	-0.14	60.67	0
251	SLU 20	801	0	7545	-0.14	61.64	0
251	SLU 21	801	0	7540	-0.14	61.59	0
251	SLU 22	723	0	6855	-0.13	55.88	0
251	SLU 23	723	0	6846	-0.14	55.81	0
251	SLU 24	742	0	7038	-0.14	57.43	0
251	SLU 25	741	0	7033	-0.14	57.38	0
251	SLU 26	733	0	6956	-0.14	56.73	0
251	SLU 27	753	0	7148	-0.14	58.35	0
251	SLU 28	752	0	7143	-0.14	58.3	0
251	SLU 29	745	0	7075	-0.14	57.72	0
251	SLU 30	745	0	7070	-0.14	57.68	0
251	SLU 31	845	0	7944	-0.15	64.99	0
251	SLU 32	864	0	8136	-0.15	66.62	0
251	SLU 33	864	0	8130	-0.15	66.57	0
251	SLU 34	856	0	8054	-0.15	65.92	0
251	SLU 35	875	0	8246	-0.15	67.54	0
251	SLU 36	875	0	8241	-0.15	67.49	0
251	SLU 37	868	0	8173	-0.15	66.91	0
251	SLU 38	867	0	8167	-0.15	66.87	0
251	SLU 39	899	0	8423	-0.15	69.01	0
251	SLU 40	898	0	8418	-0.15	68.96	0
251	SLU 41	909	0	8533	-0.15	69.93	0
251	SLU 42	909	0	8528	-0.15	69.88	0
251	SLU 43	763	0	7288	-0.15	59.02	0
251	SLU 44	762	0	7280	-0.15	58.95	0
251	SLU 45	781	0	7472	-0.15	60.57	0
251	SLU 46	781	0	7466	-0.16	60.53	0
251	SLU 47	773	0	7390	-0.15	59.87	0
251	SLU 48	792	0	7582	-0.15	61.49	0
251	SLU 49	792	0	7576	-0.16	61.45	0
251	SLU 50	784	0	7508	-0.15	60.87	0
251	SLU 51	784	0	7503	-0.15	60.82	0
251	SLU 52	885	0	8377	-0.16	68.14	0
251	SLU 53	904	0	8569	-0.16	69.76	0
251	SLU 54	903	0	8564	-0.17	69.72	0
251	SLU 55	895	0	8487	-0.16	69.06	0
251	SLU 56	915	0	8679	-0.17	70.68	0
251	SLU 57	914	0	8674	-0.17	70.64	0
251	SLU 58	907	0	8606	-0.16	70.06	0
251	SLU 59	907	0	8601	-0.16	70.01	0
251	SLU 60	938	0	8856	-0.17	72.15	0
251	SLU 61	937	0	8851	-0.17	72.11	0
251	SLU 62	949	0	8967	-0.17	73.07	0
251	SLU 63	948	0	8961	-0.17	73.03	0
251	SLU 64	871	0	8276	-0.17	67.31	0
251	SLU 65	870	0	8267	-0.17	67.24	0
251	SLU 66	889	0	8459	-0.17	68.86	0
251	SLU 67	889	0	8454	-0.17	68.82	0
251	SLU 68	881	0	8377	-0.17	68.16	0
251	SLU 69	900	0	8569	-0.17	69.78	0
251	SLU 70	900	0	8564	-0.17	69.74	0
251	SLU 71	893	0	8496	-0.17	69.16	0
251	SLU 72	892	0	8491	-0.17	69.11	0
251	SLU 73	993	0	9365	-0.18	76.43	0
251	SLU 74	1012	0	9557	-0.18	78.05	0
251	SLU 75	1012	0	9552	-0.18	78.01	0
251	SLU 76	1004	0	9475	-0.18	77.35	0
251	SLU 77	1023	0	9667	-0.18	78.97	0
251	SLU 78	1022	0	9662	-0.18	78.93	0
251	SLU 79	1015	0	9594	-0.18	78.35	0
251	SLU 80	1015	0	9589	-0.18	78.3	0
251	SLU 81	1046	0	9844	-0.18	80.44	0
251	SLU 82	1046	0	9839	-0.18	80.4	0
251	SLU 83	1057	0	9954	-0.18	81.36	0
251	SLU 84	1056	0	9949	-0.18	81.32	0
251	SLE RA 1	646	0	6149	-0.12	49.96	0
251	SLE RA 2	646	0	6143	-0.13	49.91	0
251	SLE RA 3	658	0	6271	-0.13	50.99	0
251	SLE RA 4	658	0	6268	-0.13	50.96	0
251	SLE RA 5	653	0	6217	-0.13	50.52	0
251	SLE RA 6	666	0	6345	-0.13	51.6	0
251	SLE RA 7	665	0	6341	-0.13	51.58	0

Nodo	Cont.	Reazione a traslazione			Reazione a rotazione		
Ind.	N.br.	x	y	z	x	y	z
251	SLE RA 8	661	0	6296	-0.12	51.19	0
251	SLE RA 9	660	0	6292	-0.13	51.16	0
251	SLE RA 10	727	0	6875	-0.13	56.04	0
251	SLE RA 11	740	0	7003	-0.13	57.12	0
251	SLE RA 12	740	0	7000	-0.13	57.09	0
251	SLE RA 13	735	0	6949	-0.13	56.65	0
251	SLE RA 14	747	0	7077	-0.13	57.73	0
251	SLE RA 15	747	0	7073	-0.14	57.7	0
251	SLE RA 16	742	0	7028	-0.13	57.31	0
251	SLE RA 17	742	0	7024	-0.13	57.28	0
251	SLE RA 18	763	0	7195	-0.13	58.71	0
251	SLE RA 19	763	0	7191	-0.14	58.68	0
251	SLE RA 20	770	0	7268	-0.13	59.32	0
251	SLE RA 21	770	0	7264	-0.14	59.29	0
251	SLE FR 1	646	0	6149	-0.12	49.96	0
251	SLE FR 2	646	0	6148	-0.12	49.95	0
251	SLE FR 3	649	0	6178	-0.12	50.2	0
251	SLE FR 4	681	0	6462	-0.13	52.57	0
251	SLE FR 5	684	0	6492	-0.13	52.83	0
251	SLE FR 6	705	0	6672	-0.13	54.33	0
251	SLE QP 1	646	0	6149	-0.12	49.96	0
251	SLE QP 2	681	0	6463	-0.13	52.58	0
251	SLD 1	1019	9	7589	-8.7	74.59	0.02
251	SLD 2	1019	9	7589	-8.7	74.59	0.02
251	SLD 3	996	-3	7391	3.53	72.82	0
251	SLD 4	996	-3	7391	3.53	72.82	0
251	SLD 5	817	21	7101	-21.25	61.87	0.04
251	SLD 6	817	21	7101	-21.25	61.87	0.04
251	SLD 7	741	-19	6441	19.52	55.97	-0.03
251	SLD 8	741	-19	6441	19.52	55.97	-0.03
251	SLD 9	621	19	6484	-19.77	49.19	0.03
251	SLD 10	621	19	6484	-19.77	49.19	0.03
251	SLD 11	545	-21	5824	20.99	43.3	-0.04
251	SLD 12	545	-21	5824	20.99	43.3	-0.04
251	SLD 13	366	3	5534	-3.79	32.35	0
251	SLD 14	366	3	5534	-3.79	32.35	0
251	SLD 15	343	-9	5336	8.44	30.58	-0.02
251	SLD 16	343	-9	5336	8.44	30.58	-0.02
251	SLV 1	1470	24	9101	-21.88	104.01	0.04
251	SLV 2	1470	24	9101	-21.88	104.01	0.04
251	SLV 3	1416	-7	8624	9.41	99.79	-0.01
251	SLV 4	1416	-7	8624	9.41	99.79	-0.01
251	SLV 5	1000	54	7977	-54.12	74.42	0.09
251	SLV 6	1000	54	7977	-54.12	74.42	0.09
251	SLV 7	820	-48	6388	50.2	60.34	-0.08
251	SLV 8	820	-48	6388	50.2	60.34	-0.08
251	SLV 9	543	49	6537	-50.46	44.82	0.08
251	SLV 10	543	49	6537	-50.46	44.82	0.08
251	SLV 11	362	-53	4948	53.86	30.75	-0.09
251	SLV 12	362	-53	4948	53.86	30.75	-0.09
251	SLV 13	-54	7	4301	-9.67	5.38	0.01
251	SLV 14	-54	7	4301	-9.67	5.38	0.01
251	SLV 15	-108	-23	3824	21.63	1.15	-0.04
251	SLV 16	-108	-23	3824	21.63	1.15	-0.04
252	SLU 1	103	0	5328	-0.11	-5.12	0
252	SLU 2	103	0	5320	-0.11	-5.09	0
252	SLU 3	103	0	5495	-0.11	-5.52	0
252	SLU 4	103	0	5490	-0.11	-5.51	0
252	SLU 5	102	0	5421	-0.11	-5.37	0
252	SLU 6	102	0	5595	-0.11	-5.81	0
252	SLU 7	102	0	5591	-0.11	-5.79	0
252	SLU 8	101	0	5530	-0.11	-5.69	0
252	SLU 9	102	0	5525	-0.11	-5.67	0
252	SLU 10	135	0	6305	-0.12	-5.18	0
252	SLU 11	135	0	6479	-0.12	-5.61	0
252	SLU 12	135	0	6474	-0.12	-5.59	0
252	SLU 13	135	0	6405	-0.12	-5.46	0
252	SLU 14	135	0	6580	-0.12	-5.9	0
252	SLU 15	135	0	6575	-0.12	-5.88	0
252	SLU 16	134	0	6514	-0.12	-5.78	0
252	SLU 17	134	0	6509	-0.12	-5.76	0
252	SLU 18	149	0	6735	-0.12	-5.25	0
252	SLU 19	149	0	6730	-0.12	-5.23	0
252	SLU 20	148	0	6835	-0.12	-5.53	0
252	SLU 21	149	0	6831	-0.12	-5.51	0
252	SLU 22	126	0	6216	-0.12	-5.63	0
252	SLU 23	126	0	6208	-0.12	-5.6	0
252	SLU 24	126	0	6382	-0.12	-6.03	0
252	SLU 25	126	0	6378	-0.12	-6.02	0
252	SLU 26	125	0	6309	-0.12	-5.88	0
252	SLU 27	125	0	6483	-0.12	-6.32	0
252	SLU 28	125	0	6478	-0.12	-6.3	0
252	SLU 29	125	0	6417	-0.12	-6.2	0
252	SLU 30	125	0	6413	-0.12	-6.18	0
252	SLU 31	159	0	7193	-0.13	-5.69	0
252	SLU 32	158	0	7367	-0.13	-6.12	0
252	SLU 33	159	0	7362	-0.13	-6.11	0
252	SLU 34	158	0	7293	-0.13	-5.97	0
252	SLU 35	158	0	7468	-0.13	-6.41	0
252	SLU 36	158	0	7463	-0.13	-6.39	0

Nodo	Cont.	Reazione a traslazione			Reazione a rotazione		
Ind.	N.br.	x	y	z	x	y	z
252	SLU 37	157	0	7402	-0.13	-6.29	0
252	SLU 38	157	0	7397	-0.13	-6.27	0
252	SLU 39	172	0	7622	-0.13	-5.76	0
252	SLU 40	172	0	7618	-0.13	-5.74	0
252	SLU 41	172	0	7723	-0.13	-6.04	0
252	SLU 42	172	0	7718	-0.13	-6.02	0
252	SLU 43	125	0	6622	-0.14	-6.48	0
252	SLU 44	126	0	6615	-0.14	-6.45	0
252	SLU 45	125	0	6789	-0.14	-6.88	0
252	SLU 46	126	0	6784	-0.14	-6.87	0
252	SLU 47	125	0	6715	-0.14	-6.73	0
252	SLU 48	125	0	6890	-0.14	-7.17	0
252	SLU 49	125	0	6885	-0.14	-7.15	0
252	SLU 50	124	0	6824	-0.14	-7.05	0
252	SLU 51	124	0	6819	-0.14	-7.03	0
252	SLU 52	158	0	7599	-0.15	-6.54	0
252	SLU 53	158	0	7773	-0.15	-6.97	0
252	SLU 54	158	0	7769	-0.15	-6.95	0
252	SLU 55	157	0	7700	-0.15	-6.82	0
252	SLU 56	157	0	7874	-0.15	-7.26	0
252	SLU 57	157	0	7869	-0.15	-7.24	0
252	SLU 58	157	0	7808	-0.14	-7.14	0
252	SLU 59	157	0	7803	-0.15	-7.12	0
252	SLU 60	172	0	8029	-0.15	-6.61	0
252	SLU 61	172	0	8024	-0.15	-6.59	0
252	SLU 62	171	0	8129	-0.15	-6.89	0
252	SLU 63	171	0	8125	-0.15	-6.87	0
252	SLU 64	149	0	7510	-0.15	-6.99	0
252	SLU 65	149	0	7502	-0.15	-6.96	0
252	SLU 66	149	0	7677	-0.15	-7.39	0
252	SLU 67	149	0	7672	-0.15	-7.38	0
252	SLU 68	148	0	7603	-0.15	-7.24	0
252	SLU 69	148	0	7777	-0.15	-7.68	0
252	SLU 70	148	0	7772	-0.15	-7.66	0
252	SLU 71	148	0	7711	-0.15	-7.56	0
252	SLU 72	148	0	7707	-0.15	-7.54	0
252	SLU 73	181	0	8487	-0.16	-7.05	0
252	SLU 74	181	0	8661	-0.16	-7.48	0
252	SLU 75	181	0	8656	-0.16	-7.47	0
252	SLU 76	181	0	8587	-0.16	-7.33	0
252	SLU 77	181	0	8762	-0.16	-7.77	0
252	SLU 78	181	0	8757	-0.16	-7.75	0
252	SLU 79	180	0	8696	-0.16	-7.65	0
252	SLU 80	180	0	8691	-0.16	-7.63	0
252	SLU 81	195	0	8916	-0.16	-7.12	0
252	SLU 82	195	0	8912	-0.16	-7.1	0
252	SLU 83	195	0	9017	-0.16	-7.4	0
252	SLU 84	195	0	9012	-0.16	-7.38	0
252	SLE RA 1	109	0	5582	-0.11	-5.26	0
252	SLE RA 2	109	0	5577	-0.11	-5.24	0
252	SLE RA 3	109	0	5693	-0.11	-5.53	0
252	SLE RA 4	109	0	5690	-0.11	-5.52	0
252	SLE RA 5	109	0	5644	-0.11	-5.43	0
252	SLE RA 6	109	0	5760	-0.11	-5.73	0
252	SLE RA 7	109	0	5757	-0.11	-5.71	0
252	SLE RA 8	108	0	5716	-0.11	-5.65	0
252	SLE RA 9	109	0	5713	-0.11	-5.63	0
252	SLE RA 10	131	0	6233	-0.12	-5.3	0
252	SLE RA 11	131	0	6349	-0.12	-5.59	0
252	SLE RA 12	131	0	6346	-0.12	-5.58	0
252	SLE RA 13	131	0	6300	-0.12	-5.49	0
252	SLE RA 14	131	0	6416	-0.12	-5.78	0
252	SLE RA 15	131	0	6413	-0.12	-5.77	0
252	SLE RA 16	130	0	6372	-0.12	-5.71	0
252	SLE RA 17	130	0	6369	-0.12	-5.69	0
252	SLE RA 18	140	0	6519	-0.12	-5.35	0
252	SLE RA 19	140	0	6516	-0.12	-5.34	0
252	SLE RA 20	140	0	6587	-0.12	-5.54	0
252	SLE RA 21	140	0	6583	-0.12	-5.53	0
252	SLE FR 1	109	0	5582	-0.11	-5.26	0
252	SLE FR 2	109	0	5581	-0.11	-5.26	0
252	SLE FR 3	109	0	5609	-0.11	-5.34	0
252	SLE FR 4	119	0	5862	-0.11	-5.28	0
252	SLE FR 5	118	0	5890	-0.11	-5.37	0
252	SLE FR 6	125	0	6051	-0.11	-5.31	0
252	SLE QP 1	109	0	5582	-0.11	-5.26	0
252	SLE QP 2	119	0	5863	-0.11	-5.29	0
252	SLD 1	494	10	6419	-10.01	14.24	0.1
252	SLD 2	494	10	6419	-10.01	14.24	0.1
252	SLD 3	510	-6	6247	5.91	15.16	-0.05
252	SLD 4	510	-6	6247	5.91	15.16	-0.05
252	SLD 5	206	26	6291	-27.22	-0.82	0.26
252	SLD 6	206	26	6291	-27.22	-0.82	0.26
252	SLD 7	261	-25	5717	25.84	2.23	-0.24
252	SLD 8	261	-25	5717	25.84	2.23	-0.24
252	SLD 9	-24	25	6009	-26.06	-12.81	0.24
252	SLD 10	-24	25	6009	-26.06	-12.81	0.24
252	SLD 11	31	-26	5435	27	-9.76	-0.26
252	SLD 12	31	-26	5435	27	-9.76	-0.26
252	SLD 13	-273	6	5480	-6.14	-25.74	0.05

Nodo	Cont.	Reazione a traslazione			Reazione a rotazione		
Ind.	N.br.	x	y	z	x	y	z
252	SLD 14	-273	6	5480	-6.14	-25.74	0.05
252	SLD 15	-257	-10	5307	9.78	-24.82	-0.1
252	SLD 16	-257	-10	5307	9.78	-24.82	-0.1
252	SLV 1	994	25	7168	-25.39	40.26	0.25
252	SLV 2	994	25	7168	-25.39	40.26	0.25
252	SLV 3	1033	-15	6752	15.46	42.46	-0.14
252	SLV 4	1033	-15	6752	15.46	42.46	-0.14
252	SLV 5	322	68	6885	-69.64	5.03	0.66
252	SLV 6	322	68	6885	-69.64	5.03	0.66
252	SLV 7	452	-64	5499	66.51	12.38	-0.62
252	SLV 8	452	-64	5499	66.51	12.38	-0.62
252	SLV 9	-215	65	6227	-66.73	-22.96	0.62
252	SLV 10	-215	65	6227	-66.73	-22.96	0.62
252	SLV 11	-85	-67	4841	69.42	-15.61	-0.66
252	SLV 12	-85	-67	4841	69.42	-15.61	-0.66
252	SLV 13	-796	15	4975	-15.68	-53.04	0.14
252	SLV 14	-796	15	4975	-15.68	-53.04	0.14
252	SLV 15	-757	-25	4559	25.16	-50.84	-0.25
252	SLV 16	-757	-25	4559	25.16	-50.84	-0.25
253	SLU 1	89	0	4918	-0.09	18.24	0
253	SLU 2	89	0	4910	-0.09	18.22	0
253	SLU 3	90	0	5070	-0.09	18.83	0
253	SLU 4	90	0	5066	-0.09	18.82	0
253	SLU 5	89	0	5003	-0.09	18.56	0
253	SLU 6	90	0	5162	-0.09	19.17	0
253	SLU 7	90	0	5158	-0.09	19.16	0
253	SLU 8	90	0	5102	-0.09	18.92	0
253	SLU 9	90	0	5098	-0.09	18.91	0
253	SLU 10	116	0	5815	-0.09	21.96	0
253	SLU 11	117	0	5975	-0.09	22.57	0
253	SLU 12	117	0	5971	-0.09	22.56	0
253	SLU 13	116	0	5908	-0.09	22.3	0
253	SLU 14	117	0	6067	-0.09	22.91	0
253	SLU 15	117	0	6063	-0.09	22.9	0
253	SLU 16	116	0	6007	-0.09	22.66	0
253	SLU 17	116	0	6003	-0.09	22.65	0
253	SLU 18	127	0	6210	-0.09	23.59	0
253	SLU 19	127	0	6206	-0.09	23.57	0
253	SLU 20	127	0	6303	-0.09	23.93	0
253	SLU 21	127	0	6298	-0.09	23.91	0
253	SLU 22	109	0	5732	-0.09	21.58	0
253	SLU 23	110	0	5725	-0.1	21.55	0
253	SLU 24	111	0	5885	-0.09	22.16	0
253	SLU 25	111	0	5880	-0.1	22.15	0
253	SLU 26	110	0	5817	-0.1	21.89	0
253	SLU 27	111	0	5977	-0.09	22.5	0
253	SLU 28	111	0	5973	-0.1	22.49	0
253	SLU 29	110	0	5917	-0.09	22.25	0
253	SLU 30	110	0	5913	-0.09	22.24	0
253	SLU 31	136	0	6630	-0.1	25.29	0
253	SLU 32	137	0	6789	-0.1	25.9	0
253	SLU 33	137	0	6785	-0.1	25.89	0
253	SLU 34	136	0	6722	-0.1	25.63	0
253	SLU 35	137	0	6882	-0.1	26.24	0
253	SLU 36	137	0	6878	-0.1	26.23	0
253	SLU 37	136	0	6822	-0.09	26	0
253	SLU 38	137	0	6818	-0.1	25.98	0
253	SLU 39	148	0	7025	-0.1	26.92	0
253	SLU 40	148	0	7021	-0.1	26.9	0
253	SLU 41	148	0	7117	-0.09	27.26	0
253	SLU 42	148	0	7113	-0.1	27.24	0
253	SLU 43	109	0	6113	-0.11	22.57	0
253	SLU 44	109	0	6106	-0.11	22.55	0
253	SLU 45	110	0	6266	-0.11	23.16	0
253	SLU 46	110	0	6262	-0.11	23.15	0
253	SLU 47	109	0	6199	-0.11	22.89	0
253	SLU 48	110	0	6358	-0.11	23.5	0
253	SLU 49	110	0	6354	-0.11	23.49	0
253	SLU 50	109	0	6298	-0.11	23.25	0
253	SLU 51	109	0	6294	-0.11	23.24	0
253	SLU 52	136	0	7011	-0.12	26.29	0
253	SLU 53	137	0	7171	-0.11	26.9	0
253	SLU 54	137	0	7166	-0.12	26.89	0
253	SLU 55	136	0	7104	-0.12	26.63	0
253	SLU 56	137	0	7263	-0.11	27.24	0
253	SLU 57	137	0	7259	-0.12	27.23	0
253	SLU 58	136	0	7203	-0.11	26.99	0
253	SLU 59	136	0	7199	-0.11	26.98	0
253	SLU 60	147	0	7406	-0.11	27.92	0
253	SLU 61	147	0	7402	-0.12	27.9	0
253	SLU 62	147	0	7499	-0.11	28.26	0
253	SLU 63	147	0	7494	-0.12	28.24	0
253	SLU 64	129	0	6928	-0.12	25.91	0
253	SLU 65	129	0	6921	-0.12	25.88	0
253	SLU 66	130	0	7080	-0.12	26.49	0
253	SLU 67	130	0	7076	-0.12	26.48	0
253	SLU 68	129	0	7013	-0.12	26.22	0
253	SLU 69	130	0	7173	-0.12	26.83	0
253	SLU 70	131	0	7169	-0.12	26.82	0
253	SLU 71	130	0	7113	-0.12	26.59	0

Nodo	Cont.	Reazione a traslazione			Reazione a rotazione		
Ind.	N.br.	x	y	z	x	y	z
253	SLU 72	130	0	7109	-0.12	26.57	0
253	SLU 73	156	0	7826	-0.12	29.62	0
253	SLU 74	157	0	7985	-0.12	30.23	0
253	SLU 75	157	0	7981	-0.12	30.22	0
253	SLU 76	156	0	7918	-0.12	29.96	0
253	SLU 77	157	0	8078	-0.12	30.57	0
253	SLU 78	157	0	8073	-0.12	30.56	0
253	SLU 79	156	0	8018	-0.12	30.33	0
253	SLU 80	156	0	8013	-0.12	30.31	0
253	SLU 81	167	0	8221	-0.12	31.25	0
253	SLU 82	167	0	8217	-0.12	31.23	0
253	SLU 83	167	0	8313	-0.12	31.59	0
253	SLU 84	168	0	8309	-0.12	31.57	0
253	SLE RA 1	95	0	5150	-0.09	19.2	0
253	SLE RA 2	95	0	5146	-0.09	19.18	0
253	SLE RA 3	96	0	5252	-0.09	19.59	0
253	SLE RA 4	96	0	5249	-0.09	19.58	0
253	SLE RA 5	95	0	5207	-0.09	19.4	0
253	SLE RA 6	96	0	5313	-0.09	19.81	0
253	SLE RA 7	96	0	5311	-0.09	19.8	0
253	SLE RA 8	95	0	5273	-0.09	19.65	0
253	SLE RA 9	95	0	5271	-0.09	19.64	0
253	SLE RA 10	113	0	5749	-0.09	21.67	0
253	SLE RA 11	113	0	5855	-0.09	22.08	0
253	SLE RA 12	113	0	5852	-0.09	22.07	0
253	SLE RA 13	113	0	5810	-0.09	21.9	0
253	SLE RA 14	114	0	5917	-0.09	22.31	0
253	SLE RA 15	114	0	5914	-0.09	22.3	0
253	SLE RA 16	113	0	5877	-0.09	22.14	0
253	SLE RA 17	113	0	5874	-0.09	22.13	0
253	SLE RA 18	120	0	6012	-0.09	22.76	0
253	SLE RA 19	120	0	6009	-0.09	22.75	0
253	SLE RA 20	120	0	6074	-0.09	22.98	0
253	SLE RA 21	120	0	6071	-0.09	22.97	0
253	SLE FR 1	95	0	5150	-0.09	19.2	0
253	SLE FR 2	95	0	5149	-0.09	19.19	0
253	SLE FR 3	95	0	5175	-0.09	19.29	0
253	SLE FR 4	103	0	5408	-0.09	20.26	0
253	SLE FR 5	103	0	5433	-0.09	20.35	0
253	SLE FR 6	108	0	5581	-0.09	20.98	0
253	SLE QP 1	95	0	5150	-0.09	19.2	0
253	SLE QP 2	103	0	5409	-0.09	20.26	0
253	SLD 1	547	10	5668	-10.19	45.08	0.13
253	SLD 2	547	10	5668	-10.19	45.08	0.13
253	SLD 3	565	-6	5516	6.99	43.9	-0.09
253	SLD 4	565	-6	5516	6.99	43.9	-0.09
253	SLD 5	208	27	5717	-29.17	29.49	0.38
253	SLD 6	208	27	5717	-29.17	29.49	0.38
253	SLD 7	270	-26	5211	28.08	25.58	-0.36
253	SLD 8	270	-26	5211	28.08	25.58	-0.36
253	SLD 9	-65	26	5607	-28.26	14.95	0.36
253	SLD 10	-65	26	5607	-28.26	14.95	0.36
253	SLD 11	-3	-27	5101	28.99	11.04	-0.38
253	SLD 12	-3	-27	5101	28.99	11.04	-0.38
253	SLD 13	-360	6	5302	-7.16	-3.38	0.09
253	SLD 14	-360	6	5302	-7.16	-3.38	0.09
253	SLD 15	-342	-9	5150	10.01	-4.55	-0.13
253	SLD 16	-342	-9	5150	10.01	-4.55	-0.13
253	SLV 1	1139	24	6020	-25.98	78.22	0.34
253	SLV 2	1139	24	6020	-25.98	78.22	0.34
253	SLV 3	1183	-16	5653	18.11	75.45	-0.23
253	SLV 4	1183	-16	5653	18.11	75.45	-0.23
253	SLV 5	347	69	6148	-74.73	41.86	0.96
253	SLV 6	347	69	6148	-74.73	41.86	0.96
253	SLV 7	494	-67	4926	72.25	32.61	-0.93
253	SLV 8	494	-67	4926	72.25	32.61	-0.93
253	SLV 9	-288	67	5892	-72.43	7.91	0.93
253	SLV 10	-288	67	5892	-72.43	7.91	0.93
253	SLV 11	-142	-69	4669	74.56	-1.33	-0.96
253	SLV 12	-142	-69	4669	74.56	-1.33	-0.96
253	SLV 13	-978	16	5165	-18.29	-34.92	0.23
253	SLV 14	-978	16	5165	-18.29	-34.92	0.23
253	SLV 15	-934	-24	4798	25.8	-37.69	-0.34
253	SLV 16	-934	-24	4798	25.8	-37.69	-0.34
254	SLU 1	-179	0	4608	-0.06	-16.63	0
254	SLU 2	-178	0	4602	-0.07	-16.59	0
254	SLU 3	-187	0	4750	-0.06	-17.35	0
254	SLU 4	-186	0	4746	-0.06	-17.33	0
254	SLU 5	-183	0	4688	-0.06	-17.05	0
254	SLU 6	-192	0	4836	-0.06	-17.81	0
254	SLU 7	-191	0	4833	-0.06	-17.79	0
254	SLU 8	-189	0	4781	-0.06	-17.56	0
254	SLU 9	-189	0	4777	-0.06	-17.53	0
254	SLU 10	-203	0	5446	-0.06	-19.13	0
254	SLU 11	-211	0	5595	-0.06	-19.89	0
254	SLU 12	-211	0	5591	-0.06	-19.87	0
254	SLU 13	-208	0	5533	-0.06	-19.59	0
254	SLU 14	-217	0	5681	-0.06	-20.35	0
254	SLU 15	-216	0	5677	-0.06	-20.33	0
254	SLU 16	-214	0	5626	-0.06	-20.1	0

Nodo	Cont.	Reazione a traslazione			Reazione a rotazione		
Ind.	N.br.	x	y	z	x	y	z
254	SLU 17	-214	0	5622	-0.06	-20.07	0
254	SLU 18	-214	0	5815	-0.06	-20.27	0
254	SLU 19	-214	0	5811	-0.06	-20.24	0
254	SLU 20	-219	0	5901	-0.06	-20.73	0
254	SLU 21	-219	0	5897	-0.06	-20.7	0
254	SLU 22	-205	0	5368	-0.06	-19.24	0
254	SLU 23	-205	0	5361	-0.07	-19.2	0
254	SLU 24	-213	0	5510	-0.06	-19.96	0
254	SLU 25	-213	0	5506	-0.06	-19.93	0
254	SLU 26	-210	0	5448	-0.06	-19.66	0
254	SLU 27	-218	0	5596	-0.06	-20.42	0
254	SLU 28	-218	0	5592	-0.06	-20.4	0
254	SLU 29	-216	0	5541	-0.06	-20.17	0
254	SLU 30	-215	0	5537	-0.06	-20.14	0
254	SLU 31	-230	0	6206	-0.06	-21.74	0
254	SLU 32	-238	0	6355	-0.06	-22.5	0
254	SLU 33	-238	0	6351	-0.06	-22.48	0
254	SLU 34	-235	0	6293	-0.06	-22.2	0
254	SLU 35	-243	0	6441	-0.06	-22.96	0
254	SLU 36	-243	0	6437	-0.06	-22.94	0
254	SLU 37	-241	0	6385	-0.06	-22.71	0
254	SLU 38	-240	0	6382	-0.06	-22.68	0
254	SLU 39	-241	0	6575	-0.06	-22.87	0
254	SLU 40	-240	0	6571	-0.06	-22.85	0
254	SLU 41	-246	0	6661	-0.06	-23.34	0
254	SLU 42	-246	0	6657	-0.06	-23.31	0
254	SLU 43	-223	0	5730	-0.08	-20.73	0
254	SLU 44	-222	0	5723	-0.08	-20.69	0
254	SLU 45	-231	0	5872	-0.08	-21.45	0
254	SLU 46	-231	0	5868	-0.08	-21.42	0
254	SLU 47	-228	0	5810	-0.08	-21.15	0
254	SLU 48	-236	0	5958	-0.08	-21.91	0
254	SLU 49	-236	0	5954	-0.08	-21.88	0
254	SLU 50	-233	0	5903	-0.08	-21.65	0
254	SLU 51	-233	0	5899	-0.08	-21.63	0
254	SLU 52	-247	0	6568	-0.08	-23.23	0
254	SLU 53	-256	0	6717	-0.08	-23.99	0
254	SLU 54	-256	0	6713	-0.08	-23.96	0
254	SLU 55	-253	0	6655	-0.08	-23.69	0
254	SLU 56	-261	0	6803	-0.08	-24.45	0
254	SLU 57	-261	0	6799	-0.08	-24.42	0
254	SLU 58	-258	0	6747	-0.07	-24.19	0
254	SLU 59	-258	0	6744	-0.08	-24.17	0
254	SLU 60	-258	0	6937	-0.08	-24.36	0
254	SLU 61	-258	0	6933	-0.08	-24.34	0
254	SLU 62	-264	0	7023	-0.07	-24.82	0
254	SLU 63	-263	0	7019	-0.08	-24.8	0
254	SLU 64	-250	0	6490	-0.08	-23.34	0
254	SLU 65	-249	0	6483	-0.08	-23.3	0
254	SLU 66	-258	0	6632	-0.08	-24.06	0
254	SLU 67	-257	0	6628	-0.08	-24.03	0
254	SLU 68	-254	0	6570	-0.08	-23.76	0
254	SLU 69	-263	0	6718	-0.08	-24.52	0
254	SLU 70	-263	0	6714	-0.08	-24.49	0
254	SLU 71	-260	0	6662	-0.08	-24.26	0
254	SLU 72	-260	0	6659	-0.08	-24.24	0
254	SLU 73	-274	0	7328	-0.08	-25.84	0
254	SLU 74	-283	0	7477	-0.08	-26.6	0
254	SLU 75	-282	0	7473	-0.08	-26.57	0
254	SLU 76	-279	0	7414	-0.08	-26.3	0
254	SLU 77	-288	0	7563	-0.08	-27.06	0
254	SLU 78	-287	0	7559	-0.08	-27.03	0
254	SLU 79	-285	0	7507	-0.07	-26.8	0
254	SLU 80	-285	0	7503	-0.08	-26.78	0
254	SLU 81	-285	0	7697	-0.08	-26.97	0
254	SLU 82	-285	0	7693	-0.08	-26.94	0
254	SLU 83	-290	0	7783	-0.07	-27.43	0
254	SLU 84	-290	0	7779	-0.08	-27.41	0
254	SLE RA 1	-186	0	4825	-0.06	-17.38	0
254	SLE RA 2	-186	0	4821	-0.06	-17.35	0
254	SLE RA 3	-192	0	4920	-0.06	-17.86	0
254	SLE RA 4	-191	0	4917	-0.06	-17.84	0
254	SLE RA 5	-189	0	4878	-0.06	-17.66	0
254	SLE RA 6	-195	0	4977	-0.06	-18.17	0
254	SLE RA 7	-195	0	4975	-0.06	-18.15	0
254	SLE RA 8	-193	0	4940	-0.06	-18	0
254	SLE RA 9	-193	0	4938	-0.06	-17.98	0
254	SLE RA 10	-202	0	5384	-0.06	-19.05	0
254	SLE RA 11	-208	0	5483	-0.06	-19.55	0
254	SLE RA 12	-208	0	5480	-0.06	-19.54	0
254	SLE RA 13	-206	0	5442	-0.06	-19.35	0
254	SLE RA 14	-212	0	5541	-0.06	-19.86	0
254	SLE RA 15	-211	0	5538	-0.06	-19.84	0
254	SLE RA 16	-210	0	5503	-0.06	-19.69	0
254	SLE RA 17	-210	0	5501	-0.06	-19.67	0
254	SLE RA 18	-210	0	5630	-0.06	-19.8	0
254	SLE RA 19	-210	0	5627	-0.06	-19.78	0
254	SLE RA 20	-213	0	5687	-0.06	-20.11	0
254	SLE RA 21	-213	0	5685	-0.06	-20.09	0
254	SLE FR 1	-186	0	4825	-0.06	-17.38	0

Nodo	Cont.	Reazione a traslazione			Reazione a rotazione		
Ind.	N.br.	x	y	z	x	y	z
254	SLE FR 2	-186	0	4824	-0.06	-17.37	0
254	SLE FR 3	-188	0	4848	-0.06	-17.5	0
254	SLE FR 4	-193	0	5066	-0.06	-18.1	0
254	SLE FR 5	-195	0	5089	-0.06	-18.23	0
254	SLE FR 6	-198	0	5227	-0.06	-18.59	0
254	SLE QP 1	-186	0	4825	-0.06	-17.38	0
254	SLE QP 2	-193	0	5066	-0.06	-18.11	0
254	SLD 1	288	9	4960	-9.82	5.41	0.14
254	SLD 2	288	9	4960	-9.82	5.41	0.14
254	SLD 3	308	-6	4822	6.99	6.42	-0.09
254	SLD 4	308	-6	4822	6.99	6.42	-0.09
254	SLD 5	-79	26	5245	-28.48	-12.58	0.4
254	SLD 6	-79	26	5245	-28.48	-12.58	0.4
254	SLD 7	-13	-25	4783	27.55	-9.22	-0.39
254	SLD 8	-13	-25	4783	27.55	-9.22	-0.39
254	SLD 9	-374	25	5350	-27.67	-26.99	0.39
254	SLD 10	-374	25	5350	-27.67	-26.99	0.39
254	SLD 11	-308	-26	4888	28.36	-23.63	-0.4
254	SLD 12	-308	-26	4888	28.36	-23.63	-0.4
254	SLD 13	-695	6	5311	-7.11	-42.63	0.09
254	SLD 14	-695	6	5311	-7.11	-42.63	0.09
254	SLD 15	-675	-9	5173	9.7	-41.62	-0.14
254	SLD 16	-675	-9	5173	9.7	-41.62	-0.14
254	SLV 1	931	23	4822	-25.1	36.76	0.37
254	SLV 2	931	23	4822	-25.1	36.76	0.37
254	SLV 3	978	-15	4487	18.07	39.18	-0.24
254	SLV 4	978	-15	4487	18.07	39.18	-0.24
254	SLV 5	72	66	5502	-73.04	-5.33	1.03
254	SLV 6	72	66	5502	-73.04	-5.33	1.03
254	SLV 7	230	-63	4384	70.84	2.76	-0.99
254	SLV 8	230	-63	4384	70.84	2.76	-0.99
254	SLV 9	-617	63	5749	-70.96	-38.97	0.99
254	SLV 10	-617	63	5749	-70.96	-38.97	0.99
254	SLV 11	-458	-66	4631	72.92	-30.89	-1.03
254	SLV 12	-458	-66	4631	72.92	-30.89	-1.03
254	SLV 13	-1365	15	5646	-18.19	-75.4	0.24
254	SLV 14	-1365	15	5646	-18.19	-75.4	0.24
254	SLV 15	-1317	-23	5310	24.98	-72.97	-0.37
254	SLV 16	-1317	-23	5310	24.98	-72.97	-0.37
255	SLU 1	-106	0	4276	-0.04	5.44	0
255	SLU 2	-106	0	4270	-0.04	5.43	0
255	SLU 3	-110	0	4407	-0.04	5.65	0
255	SLU 4	-110	0	4403	-0.04	5.65	0
255	SLU 5	-108	0	4350	-0.04	5.56	0
255	SLU 6	-112	0	4487	-0.03	5.79	0
255	SLU 7	-112	0	4484	-0.04	5.78	0
255	SLU 8	-111	0	4436	-0.03	5.7	0
255	SLU 9	-110	0	4433	-0.04	5.7	0
255	SLU 10	-125	0	5050	-0.03	6.39	0
255	SLU 11	-129	0	5187	-0.03	6.62	0
255	SLU 12	-129	0	5183	-0.03	6.62	0
255	SLU 13	-127	0	5130	-0.03	6.53	0
255	SLU 14	-131	0	5267	-0.03	6.76	0
255	SLU 15	-131	0	5264	-0.03	6.75	0
255	SLU 16	-130	0	5216	-0.03	6.67	0
255	SLU 17	-130	0	5213	-0.03	6.67	0
255	SLU 18	-133	0	5390	-0.03	6.82	0
255	SLU 19	-133	0	5387	-0.03	6.81	0
255	SLU 20	-136	0	5470	-0.02	6.95	0
255	SLU 21	-135	0	5467	-0.03	6.95	0
255	SLU 22	-124	0	4977	-0.03	6.37	0
255	SLU 23	-124	0	4971	-0.04	6.36	0
255	SLU 24	-128	0	5108	-0.03	6.59	0
255	SLU 25	-128	0	5104	-0.03	6.58	0
255	SLU 26	-126	0	5051	-0.03	6.5	0
255	SLU 27	-130	0	5188	-0.03	6.72	0
255	SLU 28	-130	0	5184	-0.03	6.72	0
255	SLU 29	-128	0	5137	-0.03	6.64	0
255	SLU 30	-128	0	5133	-0.03	6.63	0
255	SLU 31	-143	0	5751	-0.03	7.33	0
255	SLU 32	-147	0	5888	-0.02	7.56	0
255	SLU 33	-147	0	5884	-0.03	7.55	0
255	SLU 34	-145	0	5831	-0.03	7.46	0
255	SLU 35	-149	0	5968	-0.02	7.69	0
255	SLU 36	-149	0	5964	-0.02	7.69	0
255	SLU 37	-148	0	5917	-0.02	7.61	0
255	SLU 38	-147	0	5913	-0.02	7.6	0
255	SLU 39	-151	0	6091	-0.02	7.76	0
255	SLU 40	-151	0	6087	-0.02	7.75	0
255	SLU 41	-153	0	6171	-0.02	7.89	0
255	SLU 42	-153	0	6168	-0.02	7.88	0
255	SLU 43	-132	0	5318	-0.05	6.75	0
255	SLU 44	-132	0	5312	-0.06	6.73	0
255	SLU 45	-135	0	5449	-0.05	6.96	0
255	SLU 46	-135	0	5446	-0.05	6.96	0
255	SLU 47	-134	0	5393	-0.05	6.87	0
255	SLU 48	-138	0	5529	-0.05	7.1	0
255	SLU 49	-138	0	5526	-0.05	7.09	0
255	SLU 50	-136	0	5478	-0.05	7.01	0
255	SLU 51	-136	0	5475	-0.05	7.01	0

Nodo	Cont.	Reazione a traslazione			Reazione a rotazione		
Ind.	N.br.	x	y	z	x	y	z
255	SLU 52	-151	0	6092	-0.05	7.7	0
255	SLU 53	-155	0	6229	-0.04	7.93	0
255	SLU 54	-154	0	6226	-0.04	7.93	0
255	SLU 55	-153	0	6173	-0.05	7.84	0
255	SLU 56	-157	0	6309	-0.04	8.07	0
255	SLU 57	-157	0	6306	-0.04	8.06	0
255	SLU 58	-155	0	6258	-0.04	7.98	0
255	SLU 59	-155	0	6255	-0.04	7.97	0
255	SLU 60	-159	0	6432	-0.04	8.13	0
255	SLU 61	-159	0	6429	-0.04	8.12	0
255	SLU 62	-161	0	6513	-0.04	8.26	0
255	SLU 63	-161	0	6509	-0.04	8.26	0
255	SLU 64	-150	0	6019	-0.05	7.68	0
255	SLU 65	-149	0	6013	-0.05	7.67	0
255	SLU 66	-153	0	6150	-0.04	7.9	0
255	SLU 67	-153	0	6147	-0.05	7.89	0
255	SLU 68	-152	0	6093	-0.05	7.8	0
255	SLU 69	-156	0	6230	-0.04	8.03	0
255	SLU 70	-155	0	6227	-0.04	8.03	0
255	SLU 71	-154	0	6179	-0.04	7.95	0
255	SLU 72	-154	0	6176	-0.04	7.94	0
255	SLU 73	-168	0	6793	-0.04	8.64	0
255	SLU 74	-172	0	6930	-0.04	8.87	0
255	SLU 75	-172	0	6927	-0.04	8.86	0
255	SLU 76	-171	0	6873	-0.04	8.77	0
255	SLU 77	-175	0	7010	-0.03	9	0
255	SLU 78	-175	0	7007	-0.04	9	0
255	SLU 79	-173	0	6959	-0.03	8.92	0
255	SLU 80	-173	0	6956	-0.04	8.91	0
255	SLU 81	-177	0	7133	-0.03	9.07	0
255	SLU 82	-177	0	7130	-0.04	9.06	0
255	SLU 83	-179	0	7213	-0.03	9.2	0
255	SLU 84	-179	0	7210	-0.03	9.19	0
255	SLE RA 1	-111	0	4476	-0.04	5.7	0
255	SLE RA 2	-111	0	4472	-0.04	5.7	0
255	SLE RA 3	-114	0	4563	-0.03	5.85	0
255	SLE RA 4	-114	0	4561	-0.04	5.84	0
255	SLE RA 5	-113	0	4526	-0.04	5.79	0
255	SLE RA 6	-115	0	4617	-0.03	5.94	0
255	SLE RA 7	-115	0	4615	-0.04	5.93	0
255	SLE RA 8	-114	0	4583	-0.03	5.88	0
255	SLE RA 9	-114	0	4581	-0.03	5.88	0
255	SLE RA 10	-124	0	4992	-0.03	6.34	0
255	SLE RA 11	-126	0	5083	-0.03	6.5	0
255	SLE RA 12	-126	0	5081	-0.03	6.49	0
255	SLE RA 13	-125	0	5046	-0.03	6.43	0
255	SLE RA 14	-128	0	5137	-0.03	6.58	0
255	SLE RA 15	-128	0	5134	-0.03	6.58	0
255	SLE RA 16	-127	0	5103	-0.03	6.53	0
255	SLE RA 17	-127	0	5101	-0.03	6.52	0
255	SLE RA 18	-129	0	5219	-0.03	6.63	0
255	SLE RA 19	-129	0	5216	-0.03	6.62	0
255	SLE RA 20	-131	0	5272	-0.03	6.72	0
255	SLE RA 21	-131	0	5270	-0.03	6.71	0
255	SLE FR 1	-111	0	4476	-0.04	5.7	0
255	SLE FR 2	-111	0	4475	-0.04	5.7	0
255	SLE FR 3	-112	0	4497	-0.04	5.74	0
255	SLE FR 4	-117	0	4698	-0.03	5.98	0
255	SLE FR 5	-117	0	4720	-0.03	6.02	0
255	SLE FR 6	-120	0	4847	-0.03	6.16	0
255	SLE QP 1	-111	0	4476	-0.04	5.7	0
255	SLE QP 2	-117	0	4699	-0.03	5.98	0
255	SLD 1	446	8	4455	-8.99	34.98	0.13
255	SLD 2	446	8	4455	-8.99	34.98	0.13
255	SLD 3	421	-4	4324	6.03	33.54	-0.07
255	SLD 4	421	-4	4324	6.03	33.54	-0.07
255	SLD 5	91	22	4825	-25.5	16.85	0.34
255	SLD 6	91	22	4825	-25.5	16.85	0.34
255	SLD 7	6	-21	4387	24.57	12.08	-0.32
255	SLD 8	6	-21	4387	24.57	12.08	-0.32
255	SLD 9	-239	20	5010	-24.63	-0.12	0.32
255	SLD 10	-239	20	5010	-24.63	-0.12	0.32
255	SLD 11	-324	-22	4573	25.44	-4.89	-0.34
255	SLD 12	-324	-22	4573	25.44	-4.89	-0.34
255	SLD 13	-654	4	5074	-6.1	-21.58	0.07
255	SLD 14	-654	4	5074	-6.1	-21.58	0.07
255	SLD 15	-679	-8	4943	8.93	-23.02	-0.13
255	SLD 16	-679	-8	4943	8.93	-23.02	-0.13
255	SLV 1	1199	21	4132	-22.97	73.75	0.33
255	SLV 2	1199	21	4132	-22.97	73.75	0.33
255	SLV 3	1138	-11	3815	15.59	70.34	-0.18
255	SLV 4	1138	-11	3815	15.59	70.34	-0.18
255	SLV 5	369	55	5010	-65.4	31.47	0.87
255	SLV 6	369	55	5010	-65.4	31.47	0.87
255	SLV 7	168	-53	3952	63.14	20.12	-0.83
255	SLV 8	168	-53	3952	63.14	20.12	-0.83
255	SLV 9	-402	52	5445	-63.21	-8.16	0.83
255	SLV 10	-402	52	5445	-63.21	-8.16	0.83
255	SLV 11	-603	-55	4387	65.33	-19.51	-0.87
255	SLV 12	-603	-55	4387	65.33	-19.51	-0.87

Nodo	Cont.	Reazione a traslazione			Reazione a rotazione		
Ind.	N.br.	x	y	z	x	y	z
255	SLV 13	-1371	11	5583	-15.66	-58.38	0.18
255	SLV 14	-1371	11	5583	-15.66	-58.38	0.18
255	SLV 15	-1432	-21	5265	22.91	-61.79	-0.33
255	SLV 16	-1432	-21	5265	22.91	-61.79	-0.33
256	SLU 1	-243	0	4082	-0.02	-17.51	0
256	SLU 2	-242	0	4076	-0.03	-17.47	0
256	SLU 3	-250	0	4208	-0.02	-18.12	0
256	SLU 4	-250	0	4204	-0.02	-18.1	0
256	SLU 5	-247	0	4154	-0.02	-17.84	0
256	SLU 6	-255	0	4286	-0.02	-18.48	0
256	SLU 7	-254	0	4282	-0.02	-18.46	0
256	SLU 8	-251	0	4237	-0.01	-18.24	0
256	SLU 9	-251	0	4234	-0.02	-18.22	0
256	SLU 10	-293	0	4812	-0.01	-20.86	0
256	SLU 11	-301	0	4944	-0.01	-21.5	0
256	SLU 12	-301	0	4940	-0.01	-21.48	0
256	SLU 13	-298	0	4890	-0.01	-21.22	0
256	SLU 14	-306	0	5021	0	-21.87	0
256	SLU 15	-305	0	5018	-0.01	-21.85	0
256	SLU 16	-302	0	4973	0	-21.62	0
256	SLU 17	-302	0	4970	-0.01	-21.6	0
256	SLU 18	-316	0	5133	0	-22.34	0
256	SLU 19	-315	0	5130	-0.01	-22.32	0
256	SLU 20	-320	0	5211	0	-22.7	0
256	SLU 21	-320	0	5207	0	-22.68	0
256	SLU 22	-288	0	4745	-0.01	-20.61	0
256	SLU 23	-287	0	4739	-0.02	-20.58	0
256	SLU 24	-295	0	4871	-0.01	-21.22	0
256	SLU 25	-295	0	4868	-0.01	-21.2	0
256	SLU 26	-292	0	4817	-0.01	-20.94	0
256	SLU 27	-300	0	4949	-0.01	-21.58	0
256	SLU 28	-299	0	4945	-0.01	-21.56	0
256	SLU 29	-296	0	4900	-0.01	-21.34	0
256	SLU 30	-296	0	4897	-0.01	-21.32	0
256	SLU 31	-338	0	5475	0	-23.96	0
256	SLU 32	-346	0	5607	0	-24.6	0
256	SLU 33	-346	0	5604	0	-24.58	0
256	SLU 34	-343	0	5553	0	-24.32	0
256	SLU 35	-350	0	5685	0.01	-24.97	0
256	SLU 36	-350	0	5681	0	-24.95	0
256	SLU 37	-347	0	5636	0.01	-24.72	0
256	SLU 38	-347	0	5633	0	-24.7	0
256	SLU 39	-361	0	5796	0.01	-25.44	0
256	SLU 40	-360	0	5793	0	-25.42	0
256	SLU 41	-365	0	5874	0.01	-25.8	0
256	SLU 42	-365	0	5871	0.01	-25.78	0
256	SLU 43	-300	0	5079	-0.03	-21.7	0
256	SLU 44	-300	0	5073	-0.04	-21.66	0
256	SLU 45	-308	0	5205	-0.03	-22.31	0
256	SLU 46	-307	0	5202	-0.03	-22.29	0
256	SLU 47	-304	0	5151	-0.03	-22.03	0
256	SLU 48	-312	0	5283	-0.02	-22.67	0
256	SLU 49	-312	0	5279	-0.03	-22.65	0
256	SLU 50	-309	0	5234	-0.02	-22.43	0
256	SLU 51	-308	0	5231	-0.03	-22.41	0
256	SLU 52	-351	0	5809	-0.02	-25.05	0
256	SLU 53	-359	0	5941	-0.02	-25.69	0
256	SLU 54	-358	0	5938	-0.02	-25.67	0
256	SLU 55	-355	0	5887	-0.02	-25.41	0
256	SLU 56	-363	0	6019	-0.01	-26.05	0
256	SLU 57	-363	0	6015	-0.02	-26.03	0
256	SLU 58	-360	0	5970	-0.01	-25.81	0
256	SLU 59	-359	0	5967	-0.02	-25.79	0
256	SLU 60	-373	0	6130	-0.01	-26.53	0
256	SLU 61	-373	0	6127	-0.02	-26.51	0
256	SLU 62	-377	0	6208	-0.01	-26.89	0
256	SLU 63	-377	0	6205	-0.01	-26.87	0
256	SLU 64	-345	0	5742	-0.02	-24.8	0
256	SLU 65	-345	0	5736	-0.03	-24.76	0
256	SLU 66	-353	0	5868	-0.02	-25.41	0
256	SLU 67	-352	0	5865	-0.02	-25.39	0
256	SLU 68	-349	0	5814	-0.02	-25.13	0
256	SLU 69	-357	0	5946	-0.02	-25.77	0
256	SLU 70	-357	0	5943	-0.02	-25.75	0
256	SLU 71	-354	0	5897	-0.02	-25.53	0
256	SLU 72	-353	0	5894	-0.02	-25.51	0
256	SLU 73	-396	0	6472	-0.01	-28.15	0
256	SLU 74	-404	0	6604	-0.01	-28.79	0
256	SLU 75	-403	0	6601	-0.01	-28.77	0
256	SLU 76	-400	0	6550	-0.01	-28.51	0
256	SLU 77	-408	0	6682	0	-29.15	0
256	SLU 78	-408	0	6678	-0.01	-29.14	0
256	SLU 79	-405	0	6633	0	-28.91	0
256	SLU 80	-404	0	6630	-0.01	-28.89	0
256	SLU 81	-418	0	6793	0	-29.63	0
256	SLU 82	-418	0	6790	-0.01	-29.61	0
256	SLU 83	-422	0	6871	0	-29.99	0
256	SLU 84	-422	0	6868	0	-29.97	0
256	SLE RA 1	-256	0	4271	-0.02	-18.39	0
256	SLE RA 2	-255	0	4267	-0.02	-18.37	0

Nodo	Cont.	Reazione a traslazione			Reazione a rotazione		
Ind.	N.br.	x	y	z	x	y	z
256	SLE RA 3	-261	0	4355	-0.02	-18.8	0
256	SLE RA 4	-260	0	4353	-0.02	-18.79	0
256	SLE RA 5	-258	0	4319	-0.02	-18.61	0
256	SLE RA 6	-263	0	4407	-0.01	-19.04	0
256	SLE RA 7	-263	0	4405	-0.02	-19.03	0
256	SLE RA 8	-261	0	4375	-0.01	-18.88	0
256	SLE RA 9	-261	0	4373	-0.02	-18.87	0
256	SLE RA 10	-289	0	4758	-0.01	-20.63	0
256	SLE RA 11	-295	0	4846	-0.01	-21.06	0
256	SLE RA 12	-294	0	4844	-0.01	-21.04	0
256	SLE RA 13	-292	0	4810	-0.01	-20.87	0
256	SLE RA 14	-297	0	4898	-0.01	-21.3	0
256	SLE RA 15	-297	0	4895	-0.01	-21.29	0
256	SLE RA 16	-295	0	4865	-0.01	-21.13	0
256	SLE RA 17	-295	0	4863	-0.01	-21.12	0
256	SLE RA 18	-304	0	4972	-0.01	-21.61	0
256	SLE RA 19	-304	0	4970	-0.01	-21.6	0
256	SLE RA 20	-307	0	5024	-0.01	-21.86	0
256	SLE RA 21	-307	0	5022	-0.01	-21.84	0
256	SLE FR 1	-256	0	4271	-0.02	-18.39	0
256	SLE FR 2	-256	0	4270	-0.02	-18.39	0
256	SLE FR 3	-257	0	4292	-0.02	-18.49	0
256	SLE FR 4	-270	0	4481	-0.02	-19.35	0
256	SLE FR 5	-271	0	4502	-0.01	-19.46	0
256	SLE FR 6	-280	0	4622	-0.01	-20	0
256	SLE QP 1	-256	0	4271	-0.02	-18.39	0
256	SLE QP 2	-270	0	4481	-0.02	-19.36	0
256	SLD 1	322	7	4141	-7.62	8.94	0.09
256	SLD 2	322	7	4141	-7.62	8.94	0.09
256	SLD 3	291	-2	4004	4.47	7.58	-0.03
256	SLD 4	291	-2	4004	4.47	7.58	-0.03
256	SLD 5	-45	15	4587	-20.63	-8.81	0.22
256	SLD 6	-45	15	4587	-20.63	-8.81	0.22
256	SLD 7	-150	-14	4131	19.66	-13.34	-0.2
256	SLD 8	-150	-14	4131	19.66	-13.34	-0.2
256	SLD 9	-391	14	4832	-19.69	-25.38	0.2
256	SLD 10	-391	14	4832	-19.69	-25.38	0.2
256	SLD 11	-495	-15	4376	20.6	-29.91	-0.22
256	SLD 12	-495	-15	4376	20.6	-29.91	-0.22
256	SLD 13	-831	2	4958	-4.5	-46.3	0.03
256	SLD 14	-831	2	4958	-4.5	-46.3	0.03
256	SLD 15	-862	-7	4821	7.59	-47.66	-0.1
256	SLD 16	-862	-7	4821	7.59	-47.66	-0.1
256	SLV 1	1114	17	3690	-19.42	46.79	0.24
256	SLV 2	1114	17	3690	-19.42	46.79	0.24
256	SLV 3	1039	-6	3359	11.6	43.54	-0.09
256	SLV 4	1039	-6	3359	11.6	43.54	-0.09
256	SLV 5	259	39	4746	-52.88	5.42	0.57
256	SLV 6	259	39	4746	-52.88	5.42	0.57
256	SLV 7	9	-36	3643	50.52	-5.42	-0.52
256	SLV 8	9	-36	3643	50.52	-5.42	-0.52
256	SLV 9	-549	36	5320	-50.55	-33.29	0.52
256	SLV 10	-549	36	5320	-50.55	-33.29	0.52
256	SLV 11	-799	-39	4217	52.85	-44.14	-0.57
256	SLV 12	-799	-39	4217	52.85	-44.14	-0.57
256	SLV 13	-1579	6	5603	-11.63	-82.25	0.09
256	SLV 14	-1579	6	5603	-11.63	-82.25	0.09
256	SLV 15	-1654	-17	5272	19.38	-85.51	-0.24
256	SLV 16	-1654	-17	5272	19.38	-85.51	-0.24
257	SLU 1	-199	0	3912	-0.02	-3.16	0
257	SLU 2	-199	0	3907	-0.02	-3.17	0
257	SLU 3	-203	0	4035	-0.01	-3.13	0
257	SLU 4	-203	0	4032	-0.02	-3.14	0
257	SLU 5	-200	0	3984	-0.02	-3.12	0
257	SLU 6	-205	0	4112	-0.01	-3.09	0
257	SLU 7	-205	0	4109	-0.01	-3.09	0
257	SLU 8	-202	0	4066	-0.01	-3.07	0
257	SLU 9	-202	0	4063	-0.01	-3.07	0
257	SLU 10	-250	0	4599	-0.01	-4.41	0
257	SLU 11	-254	0	4727	0	-4.37	0
257	SLU 12	-254	0	4724	0	-4.38	0
257	SLU 13	-252	0	4676	-0.01	-4.36	0
257	SLU 14	-256	0	4804	0	-4.33	0
257	SLU 15	-256	0	4801	0	-4.33	0
257	SLU 16	-253	0	4758	0	-4.31	0
257	SLU 17	-253	0	4755	0	-4.31	0
257	SLU 18	-272	0	4900	0	-4.93	0
257	SLU 19	-272	0	4897	0	-4.94	0
257	SLU 20	-274	0	4977	0	-4.89	0
257	SLU 21	-273	0	4974	0	-4.89	0
257	SLU 22	-240	0	4539	-0.01	-4.02	0
257	SLU 23	-240	0	4534	-0.01	-4.03	0
257	SLU 24	-244	0	4662	0	-4	0
257	SLU 25	-244	0	4659	-0.01	-4	0
257	SLU 26	-242	0	4611	-0.01	-3.98	0
257	SLU 27	-246	0	4739	0	-3.95	0
257	SLU 28	-246	0	4736	0	-3.95	0
257	SLU 29	-244	0	4693	0	-3.93	0
257	SLU 30	-244	0	4690	0	-3.93	0
257	SLU 31	-291	0	5226	0	-5.27	0

Nodo	Cont.	Reazione a traslazione			Reazione a rotazione		
Ind.	N.br.	x	y	z	x	y	z
257	SLU 32	-295	0	5354	0.01	-5.24	0
257	SLU 33	-295	0	5351	0.01	-5.24	0
257	SLU 34	-293	0	5303	0.01	-5.22	0
257	SLU 35	-297	0	5431	0.01	-5.19	0
257	SLU 36	-297	0	5428	0.01	-5.19	0
257	SLU 37	-295	0	5385	0.01	-5.17	0
257	SLU 38	-295	0	5382	0.01	-5.17	0
257	SLU 39	-313	0	5527	0.01	-5.8	0
257	SLU 40	-313	0	5524	0.01	-5.8	0
257	SLU 41	-315	0	5604	0.02	-5.75	0
257	SLU 42	-315	0	5601	0.01	-5.75	0
257	SLU 43	-244	0	4871	-0.03	-3.82	0
257	SLU 44	-244	0	4866	-0.03	-3.82	0
257	SLU 45	-248	0	4994	-0.02	-3.79	0
257	SLU 46	-248	0	4991	-0.03	-3.79	0
257	SLU 47	-246	0	4943	-0.03	-3.77	0
257	SLU 48	-250	0	5071	-0.02	-3.74	0
257	SLU 49	-250	0	5067	-0.02	-3.74	0
257	SLU 50	-248	0	5025	-0.02	-3.72	0
257	SLU 51	-248	0	5021	-0.02	-3.72	0
257	SLU 52	-295	0	5557	-0.02	-5.06	0
257	SLU 53	-299	0	5686	-0.01	-5.03	0
257	SLU 54	-299	0	5682	-0.01	-5.03	0
257	SLU 55	-297	0	5634	-0.01	-5.01	0
257	SLU 56	-301	0	5762	-0.01	-4.98	0
257	SLU 57	-301	0	5759	-0.01	-4.98	0
257	SLU 58	-299	0	5716	-0.01	-4.96	0
257	SLU 59	-299	0	5713	-0.01	-4.96	0
257	SLU 60	-317	0	5859	-0.01	-5.59	0
257	SLU 61	-317	0	5856	-0.01	-5.59	0
257	SLU 62	-319	0	5936	0	-5.54	0
257	SLU 63	-319	0	5933	-0.01	-5.54	0
257	SLU 64	-286	0	5498	-0.02	-4.68	0
257	SLU 65	-286	0	5493	-0.02	-4.68	0
257	SLU 66	-290	0	5621	-0.01	-4.65	0
257	SLU 67	-290	0	5618	-0.02	-4.65	0
257	SLU 68	-287	0	5570	-0.02	-4.64	0
257	SLU 69	-292	0	5698	-0.01	-4.6	0
257	SLU 70	-292	0	5694	-0.01	-4.6	0
257	SLU 71	-289	0	5652	-0.01	-4.58	0
257	SLU 72	-289	0	5648	-0.01	-4.59	0
257	SLU 73	-337	0	6184	-0.01	-5.92	0
257	SLU 74	-341	0	6313	0	-5.89	0
257	SLU 75	-341	0	6309	0	-5.89	0
257	SLU 76	-338	0	6261	0	-5.88	0
257	SLU 77	-343	0	6389	0.01	-5.84	0
257	SLU 78	-343	0	6386	0	-5.84	0
257	SLU 79	-340	0	6343	0.01	-5.82	0
257	SLU 80	-340	0	6340	0	-5.83	0
257	SLU 81	-359	0	6486	0	-6.45	0
257	SLU 82	-359	0	6483	0	-6.45	0
257	SLU 83	-360	0	6563	0.01	-6.4	0
257	SLU 84	-360	0	6560	0	-6.41	0
257	SLE RA 1	-211	0	4091	-0.02	-3.41	0
257	SLE RA 2	-211	0	4088	-0.02	-3.41	0
257	SLE RA 3	-213	0	4173	-0.01	-3.39	0
257	SLE RA 4	-213	0	4171	-0.01	-3.39	0
257	SLE RA 5	-212	0	4139	-0.02	-3.38	0
257	SLE RA 6	-215	0	4224	-0.01	-3.36	0
257	SLE RA 7	-215	0	4222	-0.01	-3.36	0
257	SLE RA 8	-213	0	4194	-0.01	-3.35	0
257	SLE RA 9	-213	0	4192	-0.01	-3.35	0
257	SLE RA 10	-245	0	4549	-0.01	-4.24	0
257	SLE RA 11	-247	0	4634	0	-4.22	0
257	SLE RA 12	-247	0	4632	-0.01	-4.22	0
257	SLE RA 13	-246	0	4600	-0.01	-4.21	0
257	SLE RA 14	-249	0	4686	0	-4.18	0
257	SLE RA 15	-249	0	4684	0	-4.19	0
257	SLE RA 16	-247	0	4655	0	-4.17	0
257	SLE RA 17	-247	0	4653	0	-4.17	0
257	SLE RA 18	-259	0	4750	0	-4.59	0
257	SLE RA 19	-259	0	4748	0	-4.59	0
257	SLE RA 20	-260	0	4801	0	-4.56	0
257	SLE RA 21	-260	0	4799	0	-4.56	0
257	SLE FR 1	-211	0	4091	-0.02	-3.41	0
257	SLE FR 2	-211	0	4091	-0.02	-3.41	0
257	SLE FR 3	-211	0	4112	-0.01	-3.4	0
257	SLE FR 4	-225	0	4288	-0.01	-3.76	0
257	SLE FR 5	-226	0	4309	-0.01	-3.75	0
257	SLE FR 6	-235	0	4421	-0.01	-4	0
257	SLE QP 1	-211	0	4091	-0.02	-3.41	0
257	SLE QP 2	-225	0	4289	-0.01	-3.76	0
257	SLD 1	415	4	3882	-5.79	28.22	0.05
257	SLD 2	415	4	3882	-5.79	28.22	0.05
257	SLD 3	373	0	3728	2.71	26.19	0
257	SLD 4	373	0	3728	2.71	26.19	0
257	SLD 5	30	8	4400	-14.63	8.91	0.1
257	SLD 6	30	8	4400	-14.63	8.91	0.1
257	SLD 7	-109	-7	3887	13.69	2.14	-0.08
257	SLD 8	-109	-7	3887	13.69	2.14	-0.08

Nodo	Cont.	Reazione a traslazione			Reazione a rotazione		
Ind.	N.br.	x	y	z	x	y	z
257	SLD 9	-342	7	4691	-13.71	-9.67	0.08
257	SLD 10	-342	7	4691	-13.71	-9.67	0.08
257	SLD 11	-480	-8	4178	14.61	-16.44	-0.1
257	SLD 12	-480	-8	4178	14.61	-16.44	-0.1
257	SLD 13	-824	0	4850	-2.73	-33.72	0
257	SLD 14	-824	0	4850	-2.73	-33.72	0
257	SLD 15	-866	-5	4696	5.77	-35.75	-0.06
257	SLD 16	-866	-5	4696	5.77	-35.75	-0.06
257	SLV 1	1272	11	3342	-14.65	71.04	0.13
257	SLV 2	1272	11	3342	-14.65	71.04	0.13
257	SLV 3	1173	0	2970	7.13	66.18	0
257	SLV 4	1173	0	2970	7.13	66.18	0
257	SLV 5	375	20	4569	-37.44	26.05	0.24
257	SLV 6	375	20	4569	-37.44	26.05	0.24
257	SLV 7	43	-17	3329	35.16	9.85	-0.2
257	SLV 8	43	-17	3329	35.16	9.85	-0.2
257	SLV 9	-494	17	5249	-35.19	-17.38	0.2
257	SLV 10	-494	17	5249	-35.19	-17.38	0.2
257	SLV 11	-826	-20	4009	37.41	-33.58	-0.24
257	SLV 12	-826	-20	4009	37.41	-33.58	-0.24
257	SLV 13	-1623	0	5608	-7.15	-73.71	0
257	SLV 14	-1623	0	5608	-7.15	-73.71	0
257	SLV 15	-1723	-11	5236	14.63	-78.57	-0.13
257	SLV 16	-1723	-11	5236	14.63	-78.57	-0.13
258	SLU 1	-339	0	3862	-0.03	-20.33	0
258	SLU 2	-339	0	3857	-0.04	-20.31	0
258	SLU 3	-347	0	3987	-0.03	-20.9	0
258	SLU 4	-347	0	3984	-0.03	-20.89	0
258	SLU 5	-343	0	3936	-0.03	-20.62	0
258	SLU 6	-351	0	4067	-0.02	-21.22	0
258	SLU 7	-351	0	4064	-0.03	-21.21	0
258	SLU 8	-347	0	4021	-0.02	-20.96	0
258	SLU 9	-347	0	4018	-0.03	-20.95	0
258	SLU 10	-420	0	4521	-0.02	-24.76	0
258	SLU 11	-428	0	4652	-0.02	-25.35	0
258	SLU 12	-428	0	4649	-0.02	-25.34	0
258	SLU 13	-424	0	4601	-0.02	-25.07	0
258	SLU 14	-432	0	4732	-0.01	-25.67	0
258	SLU 15	-432	0	4728	-0.01	-25.66	0
258	SLU 16	-428	0	4686	-0.01	-25.41	0
258	SLU 17	-428	0	4683	-0.01	-25.4	0
258	SLU 18	-455	0	4812	-0.01	-26.69	0
258	SLU 19	-455	0	4808	-0.02	-26.67	0
258	SLU 20	-459	0	4891	-0.01	-27	0
258	SLU 21	-459	0	4888	-0.01	-26.99	0
258	SLU 22	-406	0	4471	-0.02	-24.16	0
258	SLU 23	-406	0	4466	-0.03	-24.14	0
258	SLU 24	-414	0	4596	-0.02	-24.73	0
258	SLU 25	-414	0	4593	-0.02	-24.72	0
258	SLU 26	-410	0	4545	-0.02	-24.45	0
258	SLU 27	-418	0	4676	-0.01	-25.05	0
258	SLU 28	-418	0	4673	-0.02	-25.04	0
258	SLU 29	-414	0	4630	-0.01	-24.79	0
258	SLU 30	-414	0	4627	-0.02	-24.78	0
258	SLU 31	-487	0	5130	-0.01	-28.59	0
258	SLU 32	-495	0	5261	-0.01	-29.18	0
258	SLU 33	-495	0	5258	-0.01	-29.17	0
258	SLU 34	-491	0	5210	-0.01	-28.9	0
258	SLU 35	-499	0	5340	0	-29.5	0
258	SLU 36	-499	0	5337	0	-29.49	0
258	SLU 37	-495	0	5295	0	-29.24	0
258	SLU 38	-495	0	5292	0	-29.23	0
258	SLU 39	-522	0	5420	0	-30.52	0
258	SLU 40	-522	0	5417	-0.01	-30.5	0
258	SLU 41	-526	0	5500	0	-30.83	0
258	SLU 42	-526	0	5497	0	-30.82	0
258	SLU 43	-418	0	4812	-0.04	-25.12	0
258	SLU 44	-418	0	4807	-0.05	-25.09	0
258	SLU 45	-426	0	4937	-0.04	-25.69	0
258	SLU 46	-426	0	4934	-0.04	-25.68	0
258	SLU 47	-422	0	4886	-0.05	-25.41	0
258	SLU 48	-430	0	5017	-0.04	-26.01	0
258	SLU 49	-430	0	5014	-0.04	-25.99	0
258	SLU 50	-426	0	4971	-0.04	-25.75	0
258	SLU 51	-426	0	4968	-0.04	-25.73	0
258	SLU 52	-499	0	5471	-0.04	-29.54	0
258	SLU 53	-507	0	5602	-0.03	-30.14	0
258	SLU 54	-507	0	5599	-0.03	-30.13	0
258	SLU 55	-503	0	5551	-0.03	-29.86	0
258	SLU 56	-511	0	5681	-0.03	-30.46	0
258	SLU 57	-511	0	5678	-0.03	-30.44	0
258	SLU 58	-507	0	5636	-0.03	-30.2	0
258	SLU 59	-507	0	5633	-0.03	-30.18	0
258	SLU 60	-534	0	5761	-0.03	-31.47	0
258	SLU 61	-534	0	5758	-0.03	-31.46	0
258	SLU 62	-538	0	5841	-0.02	-31.79	0
258	SLU 63	-537	0	5838	-0.03	-31.78	0
258	SLU 64	-485	0	5421	-0.03	-28.95	0
258	SLU 65	-485	0	5415	-0.04	-28.92	0
258	SLU 66	-493	0	5546	-0.03	-29.52	0

Nodo	Cont.	Reazione a traslazione			Reazione a rotazione		
Ind.	N.br.	x	y	z	x	y	z
258	SLU 67	-493	0	5543	-0.03	-29.51	0
258	SLU 68	-489	0	5495	-0.03	-29.24	0
258	SLU 69	-497	0	5626	-0.03	-29.84	0
258	SLU 70	-497	0	5622	-0.03	-29.82	0
258	SLU 71	-493	0	5580	-0.03	-29.58	0
258	SLU 72	-493	0	5577	-0.03	-29.56	0
258	SLU 73	-566	0	6080	-0.03	-33.37	0
258	SLU 74	-574	0	6211	-0.02	-33.97	0
258	SLU 75	-574	0	6207	-0.02	-33.96	0
258	SLU 76	-570	0	6160	-0.02	-33.69	0
258	SLU 77	-578	0	6290	-0.01	-34.29	0
258	SLU 78	-578	0	6287	-0.02	-34.27	0
258	SLU 79	-574	0	6245	-0.01	-34.03	0
258	SLU 80	-574	0	6242	-0.02	-34.01	0
258	SLU 81	-601	0	6370	-0.02	-35.3	0
258	SLU 82	-601	0	6367	-0.02	-35.29	0
258	SLU 83	-605	0	6450	-0.01	-35.62	0
258	SLU 84	-605	0	6447	-0.02	-35.61	0
258	SLE RA 1	-359	0	4036	-0.03	-21.42	0
258	SLE RA 2	-358	0	4032	-0.03	-21.41	0
258	SLE RA 3	-364	0	4119	-0.03	-21.81	0
258	SLE RA 4	-364	0	4117	-0.03	-21.8	0
258	SLE RA 5	-361	0	4086	-0.03	-21.62	0
258	SLE RA 6	-366	0	4173	-0.02	-22.02	0
258	SLE RA 7	-366	0	4170	-0.03	-22.01	0
258	SLE RA 8	-364	0	4142	-0.02	-21.85	0
258	SLE RA 9	-364	0	4140	-0.03	-21.84	0
258	SLE RA 10	-412	0	4476	-0.02	-24.38	0
258	SLE RA 11	-418	0	4563	-0.02	-24.77	0
258	SLE RA 12	-418	0	4560	-0.02	-24.76	0
258	SLE RA 13	-415	0	4529	-0.02	-24.59	0
258	SLE RA 14	-420	0	4616	-0.02	-24.98	0
258	SLE RA 15	-420	0	4614	-0.02	-24.98	0
258	SLE RA 16	-418	0	4585	-0.02	-24.81	0
258	SLE RA 17	-418	0	4583	-0.02	-24.8	0
258	SLE RA 18	-436	0	4669	-0.02	-25.66	0
258	SLE RA 19	-435	0	4667	-0.02	-25.65	0
258	SLE RA 20	-438	0	4722	-0.01	-25.87	0
258	SLE RA 21	-438	0	4720	-0.02	-25.86	0
258	SLE FR 1	-359	0	4036	-0.03	-21.42	0
258	SLE FR 2	-359	0	4035	-0.03	-21.42	0
258	SLE FR 3	-360	0	4057	-0.03	-21.51	0
258	SLE FR 4	-382	0	4225	-0.03	-22.69	0
258	SLE FR 5	-383	0	4247	-0.02	-22.78	0
258	SLE FR 6	-397	0	4352	-0.02	-23.54	0
258	SLE QP 1	-359	0	4036	-0.03	-21.42	0
258	SLE QP 2	-382	0	4226	-0.03	-22.7	0
258	SLD 1	275	2	3775	-3.82	8.37	-0.03
258	SLD 2	275	2	3775	-3.82	8.37	-0.03
258	SLD 3	230	3	3591	1.1	6.53	-0.02
258	SLD 4	230	3	3591	1.1	6.53	-0.02
258	SLD 5	-118	-2	4370	-8.64	-10.59	-0.03
258	SLD 6	-118	-2	4370	-8.64	-10.59	-0.03
258	SLD 7	-265	4	3757	7.79	-16.72	0.01
258	SLD 8	-265	4	3757	7.79	-16.72	0.01
258	SLD 9	-498	-4	4695	-7.84	-28.67	-0.01
258	SLD 10	-498	-4	4695	-7.84	-28.67	-0.01
258	SLD 11	-646	2	4082	8.59	-34.8	0.03
258	SLD 12	-646	2	4082	8.59	-34.8	0.03
258	SLD 13	-994	-3	4861	-1.15	-51.92	0.02
258	SLD 14	-994	-3	4861	-1.15	-51.92	0.02
258	SLD 15	-1038	-2	4677	3.77	-53.76	0.03
258	SLD 16	-1038	-2	4677	3.77	-53.76	0.03
258	SLV 1	1154	4	3177	-9.55	49.96	-0.07
258	SLV 2	1154	4	3177	-9.55	49.96	-0.07
258	SLV 3	1048	8	2733	3.06	45.55	-0.04
258	SLV 4	1048	8	2733	3.06	45.55	-0.04
258	SLV 5	240	-5	4585	-22.01	5.78	-0.07
258	SLV 6	240	-5	4585	-22.01	5.78	-0.07
258	SLV 7	-114	9	3104	20.03	-8.91	0.04
258	SLV 8	-114	9	3104	20.03	-8.91	0.04
258	SLV 9	-650	-9	5348	-20.08	-36.49	-0.03
258	SLV 10	-650	-9	5348	-20.08	-36.49	-0.03
258	SLV 11	-1003	5	3867	21.96	-51.18	0.07
258	SLV 12	-1003	5	3867	21.96	-51.18	0.07
258	SLV 13	-1811	-8	5719	-3.11	-90.94	0.04
258	SLV 14	-1811	-8	5719	-3.11	-90.94	0.04
258	SLV 15	-1917	-4	5275	9.5	-95.35	0.07
258	SLV 16	-1917	-4	5275	9.5	-95.35	0.07
259	SLU 1	-453	0	3916	-0.06	-19.67	0
259	SLU 2	-452	0	3910	-0.06	-19.66	0
259	SLU 3	-464	0	4048	-0.06	-20.14	0
259	SLU 4	-463	0	4044	-0.06	-20.13	0
259	SLU 5	-458	0	3996	-0.06	-19.91	0
259	SLU 6	-469	0	4133	-0.05	-20.39	0
259	SLU 7	-469	0	4130	-0.06	-20.38	0
259	SLU 8	-464	0	4087	-0.05	-20.17	0
259	SLU 9	-464	0	4084	-0.06	-20.17	0
259	SLU 10	-554	0	4565	-0.05	-24.09	0
259	SLU 11	-565	0	4703	-0.05	-24.57	0

Nodo	Cont.	Reazione a traslazione			Reazione a rotazione		
Ind.	N.br.	x	y	z	x	y	z
259	SLU 12	-565	0	4699	-0.05	-24.57	0
259	SLU 13	-560	0	4651	-0.05	-24.35	0
259	SLU 14	-571	0	4788	-0.05	-24.82	0
259	SLU 15	-571	0	4785	-0.05	-24.82	0
259	SLU 16	-566	0	4742	-0.05	-24.61	0
259	SLU 17	-566	0	4738	-0.05	-24.6	0
259	SLU 18	-598	0	4851	-0.05	-26.01	0
259	SLU 19	-598	0	4848	-0.05	-26	0
259	SLU 20	-604	0	4937	-0.05	-26.26	0
259	SLU 21	-604	0	4933	-0.05	-26.25	0
259	SLU 22	-538	0	4523	-0.05	-23.36	0
259	SLU 23	-538	0	4518	-0.06	-23.34	0
259	SLU 24	-549	0	4655	-0.05	-23.82	0
259	SLU 25	-549	0	4652	-0.05	-23.82	0
259	SLU 26	-543	0	4603	-0.05	-23.6	0
259	SLU 27	-555	0	4741	-0.05	-24.07	0
259	SLU 28	-554	0	4738	-0.05	-24.07	0
259	SLU 29	-549	0	4695	-0.05	-23.86	0
259	SLU 30	-549	0	4691	-0.05	-23.85	0
259	SLU 31	-639	0	5172	-0.05	-27.78	0
259	SLU 32	-651	0	5310	-0.04	-28.26	0
259	SLU 33	-650	0	5307	-0.05	-28.25	0
259	SLU 34	-645	0	5258	-0.05	-28.03	0
259	SLU 35	-656	0	5396	-0.04	-28.51	0
259	SLU 36	-656	0	5392	-0.04	-28.5	0
259	SLU 37	-651	0	5349	-0.04	-28.3	0
259	SLU 38	-651	0	5346	-0.04	-28.29	0
259	SLU 39	-683	0	5459	-0.04	-29.69	0
259	SLU 40	-683	0	5455	-0.04	-29.69	0
259	SLU 41	-689	0	5544	-0.04	-29.94	0
259	SLU 42	-689	0	5541	-0.04	-29.94	0
259	SLU 43	-559	0	4882	-0.08	-24.31	0
259	SLU 44	-559	0	4877	-0.08	-24.3	0
259	SLU 45	-570	0	5014	-0.08	-24.77	0
259	SLU 46	-570	0	5011	-0.08	-24.77	0
259	SLU 47	-565	0	4962	-0.08	-24.55	0
259	SLU 48	-576	0	5100	-0.07	-25.03	0
259	SLU 49	-576	0	5096	-0.08	-25.02	0
259	SLU 50	-571	0	5053	-0.07	-24.81	0
259	SLU 51	-571	0	5050	-0.08	-24.81	0
259	SLU 52	-661	0	5531	-0.07	-28.73	0
259	SLU 53	-672	0	5669	-0.07	-29.21	0
259	SLU 54	-672	0	5666	-0.07	-29.2	0
259	SLU 55	-667	0	5617	-0.07	-28.98	0
259	SLU 56	-678	0	5755	-0.07	-29.46	0
259	SLU 57	-678	0	5751	-0.07	-29.46	0
259	SLU 58	-673	0	5708	-0.07	-29.25	0
259	SLU 59	-673	0	5705	-0.07	-29.24	0
259	SLU 60	-705	0	5818	-0.07	-30.64	0
259	SLU 61	-705	0	5814	-0.07	-30.64	0
259	SLU 62	-711	0	5903	-0.07	-30.9	0
259	SLU 63	-710	0	5900	-0.07	-30.89	0
259	SLU 64	-645	0	5490	-0.07	-27.99	0
259	SLU 65	-644	0	5484	-0.08	-27.98	0
259	SLU 66	-655	0	5622	-0.07	-28.46	0
259	SLU 67	-655	0	5618	-0.07	-28.45	0
259	SLU 68	-650	0	5570	-0.07	-28.23	0
259	SLU 69	-661	0	5707	-0.07	-28.71	0
259	SLU 70	-661	0	5704	-0.07	-28.71	0
259	SLU 71	-656	0	5661	-0.07	-28.5	0
259	SLU 72	-656	0	5658	-0.07	-28.49	0
259	SLU 73	-746	0	6139	-0.07	-32.42	0
259	SLU 74	-757	0	6277	-0.06	-32.9	0
259	SLU 75	-757	0	6273	-0.07	-32.89	0
259	SLU 76	-752	0	6225	-0.07	-32.67	0
259	SLU 77	-763	0	6362	-0.06	-33.15	0
259	SLU 78	-763	0	6359	-0.06	-33.14	0
259	SLU 79	-758	0	6316	-0.06	-32.93	0
259	SLU 80	-758	0	6312	-0.06	-32.93	0
259	SLU 81	-790	0	6425	-0.06	-34.33	0
259	SLU 82	-790	0	6422	-0.06	-34.32	0
259	SLU 83	-796	0	6511	-0.06	-34.58	0
259	SLU 84	-796	0	6507	-0.06	-34.57	0
259	SLE RA 1	-477	0	4089	-0.06	-20.72	0
259	SLE RA 2	-477	0	4086	-0.06	-20.72	0
259	SLE RA 3	-484	0	4177	-0.06	-21.03	0
259	SLE RA 4	-484	0	4175	-0.06	-21.03	0
259	SLE RA 5	-481	0	4143	-0.06	-20.88	0
259	SLE RA 6	-488	0	4234	-0.05	-21.2	0
259	SLE RA 7	-488	0	4232	-0.06	-21.2	0
259	SLE RA 8	-485	0	4203	-0.05	-21.06	0
259	SLE RA 9	-485	0	4201	-0.06	-21.05	0
259	SLE RA 10	-545	0	4522	-0.05	-23.67	0
259	SLE RA 11	-552	0	4614	-0.05	-23.99	0
259	SLE RA 12	-552	0	4612	-0.05	-23.99	0
259	SLE RA 13	-549	0	4579	-0.05	-23.84	0
259	SLE RA 14	-556	0	4671	-0.05	-24.16	0
259	SLE RA 15	-556	0	4669	-0.05	-24.16	0
259	SLE RA 16	-553	0	4640	-0.05	-24.02	0
259	SLE RA 17	-553	0	4638	-0.05	-24.01	0

Nodo	Cont.	Reazione a traslazione			Reazione a rotazione		
Ind.	N.br.	x	y	z	x	y	z
259	SLE RA 18	-574	0	4713	-0.05	-24.95	0
259	SLE RA 19	-574	0	4711	-0.05	-24.94	0
259	SLE RA 20	-578	0	4770	-0.05	-25.12	0
259	SLE RA 21	-578	0	4768	-0.05	-25.11	0
259	SLE FR 1	-477	0	4089	-0.06	-20.72	0
259	SLE FR 2	-477	0	4089	-0.06	-20.72	0
259	SLE FR 3	-479	0	4112	-0.06	-20.79	0
259	SLE FR 4	-506	0	4276	-0.06	-21.99	0
259	SLE FR 5	-508	0	4299	-0.05	-22.06	0
259	SLE FR 6	-526	0	4401	-0.05	-22.84	0
259	SLE QP 1	-477	0	4089	-0.06	-20.72	0
259	SLE QP 2	-506	0	4276	-0.06	-21.99	0
259	SLD 1	167	-3	3725	-1.99	12.29	-0.01
259	SLD 2	167	-3	3725	-1.99	12.29	-0.01
259	SLD 3	124	-1	3498	0.12	10.36	-0.01
259	SLD 4	124	-1	3498	0.12	10.36	-0.01
259	SLD 5	-239	-4	4455	-3.83	-8.79	0.01
259	SLD 6	-239	-4	4455	-3.83	-8.79	0.01
259	SLD 7	-382	3	3699	3.2	-15.2	-0.01
259	SLD 8	-382	3	3699	3.2	-15.2	-0.01
259	SLD 9	-630	-3	4854	-3.31	-28.78	0.01
259	SLD 10	-630	-3	4854	-3.31	-28.78	0.01
259	SLD 11	-773	4	4098	3.72	-35.19	-0.01
259	SLD 12	-773	4	4098	3.72	-35.19	-0.01
259	SLD 13	-1137	2	5055	-0.23	-54.34	0.01
259	SLD 14	-1137	2	5055	-0.23	-54.34	0.01
259	SLD 15	-1180	4	4828	1.88	-56.27	0.01
259	SLD 16	-1180	4	4828	1.88	-56.27	0.01
259	SLV 1	1069	-8	2995	-4.84	58.19	-0.02
259	SLV 2	1069	-8	2995	-4.84	58.19	-0.02
259	SLV 3	967	-3	2447	0.53	53.6	-0.03
259	SLV 4	967	-3	2447	0.53	53.6	-0.03
259	SLV 5	122	-10	4724	-9.64	9.02	0.02
259	SLV 6	122	-10	4724	-9.64	9.02	0.02
259	SLV 7	-220	7	2896	8.27	-6.27	-0.03
259	SLV 8	-220	7	2896	8.27	-6.27	-0.03
259	SLV 9	-792	-7	5657	-8.38	-37.71	0.03
259	SLV 10	-792	-7	5657	-8.38	-37.71	0.03
259	SLV 11	-1134	11	3829	9.52	-53	-0.02
259	SLV 12	-1134	11	3829	9.52	-53	-0.02
259	SLV 13	-1979	3	6106	-0.64	-97.58	0.03
259	SLV 14	-1979	3	6106	-0.64	-97.58	0.03
259	SLV 15	-2082	9	5558	4.73	-102.17	0.02
259	SLV 16	-2082	9	5558	4.73	-102.17	0.02
260	SLU 1	-659	27	6659	-3.64	-19.72	0
260	SLU 2	-658	29	6649	-3.72	-19.69	0
260	SLU 3	-680	25	6892	-3.64	-20.31	0
260	SLU 4	-679	26	6886	-3.69	-20.3	0
260	SLU 5	-671	27	6803	-3.71	-20.05	0
260	SLU 6	-693	23	7046	-3.63	-20.67	0
260	SLU 7	-692	24	7040	-3.68	-20.66	0
260	SLU 8	-685	23	6966	-3.63	-20.43	0
260	SLU 9	-684	24	6960	-3.67	-20.42	0
260	SLU 10	-781	19	7739	-3.73	-23.58	0
260	SLU 11	-802	15	7982	-3.66	-24.2	0
260	SLU 12	-802	16	7976	-3.7	-24.18	0
260	SLU 13	-794	17	7892	-3.72	-23.94	0
260	SLU 14	-815	13	8135	-3.65	-24.56	0
260	SLU 15	-815	14	8130	-3.69	-24.54	0
260	SLU 16	-807	13	8056	-3.64	-24.32	0
260	SLU 17	-807	14	8050	-3.68	-24.3	0
260	SLU 18	-834	13	8216	-3.66	-25.27	0
260	SLU 19	-833	14	8210	-3.71	-25.25	0
260	SLU 20	-847	11	8369	-3.65	-25.63	0
260	SLU 21	-846	12	8363	-3.7	-25.61	0
260	SLU 22	-769	19	7682	-3.73	-23.14	0
260	SLU 23	-768	21	7672	-3.81	-23.12	0
260	SLU 24	-790	17	7915	-3.73	-23.74	0
260	SLU 25	-789	18	7910	-3.78	-23.73	0
260	SLU 26	-781	19	7826	-3.8	-23.48	0
260	SLU 27	-803	15	8069	-3.73	-24.1	0
260	SLU 28	-802	16	8063	-3.77	-24.09	0
260	SLU 29	-795	15	7989	-3.72	-23.86	0
260	SLU 30	-794	17	7983	-3.76	-23.85	0
260	SLU 31	-890	11	8762	-3.82	-27.01	0
260	SLU 32	-912	7	9005	-3.75	-27.63	0
260	SLU 33	-912	8	8999	-3.79	-27.61	0
260	SLU 34	-903	9	8916	-3.82	-27.37	0
260	SLU 35	-925	5	9159	-3.74	-27.99	0
260	SLU 36	-924	6	9153	-3.79	-27.97	0
260	SLU 37	-917	6	9079	-3.73	-27.75	0
260	SLU 38	-917	7	9073	-3.78	-27.73	0
260	SLU 39	-944	5	9239	-3.75	-28.7	0
260	SLU 40	-943	6	9233	-3.8	-28.68	0
260	SLU 41	-957	3	9392	-3.75	-29.06	0
260	SLU 42	-956	4	9387	-3.79	-29.04	0
260	SLU 43	-819	38	8306	-4.7	-24.45	0
260	SLU 44	-818	40	8296	-4.78	-24.43	0
260	SLU 45	-840	35	8539	-4.7	-25.05	0
260	SLU 46	-839	36	8533	-4.75	-25.04	0

Nodo	Cont.	Reazione a traslazione			Reazione a rotazione		
Ind.	N.br.	x	y	z	x	y	z
260	SLU 47	-831	38	8449	-4.77	-24.79	0
260	SLU 48	-853	33	8693	-4.69	-25.41	0
260	SLU 49	-852	34	8687	-4.74	-25.4	0
260	SLU 50	-845	34	8613	-4.69	-25.17	0
260	SLU 51	-845	35	8607	-4.73	-25.16	0
260	SLU 52	-941	30	9386	-4.79	-28.32	0
260	SLU 53	-962	25	9629	-4.72	-28.94	0
260	SLU 54	-962	26	9623	-4.76	-28.92	0
260	SLU 55	-954	28	9539	-4.78	-28.68	0
260	SLU 56	-975	23	9782	-4.71	-29.3	0
260	SLU 57	-975	24	9776	-4.75	-29.28	0
260	SLU 58	-967	24	9702	-4.7	-29.06	0
260	SLU 59	-967	25	9697	-4.75	-29.04	0
260	SLU 60	-994	24	9863	-4.72	-30.01	0
260	SLU 61	-994	25	9857	-4.77	-29.99	0
260	SLU 62	-1007	22	10016	-4.71	-30.37	0
260	SLU 63	-1006	23	10010	-4.76	-30.35	0
260	SLU 64	-929	30	9329	-4.79	-27.88	0
260	SLU 65	-928	32	9319	-4.87	-27.86	0
260	SLU 66	-950	28	9562	-4.79	-28.48	0
260	SLU 67	-949	29	9556	-4.84	-28.47	0
260	SLU 68	-941	30	9473	-4.86	-28.22	0
260	SLU 69	-963	26	9716	-4.79	-28.84	0
260	SLU 70	-962	27	9710	-4.83	-28.82	0
260	SLU 71	-955	26	9636	-4.78	-28.6	0
260	SLU 72	-954	27	9630	-4.82	-28.59	0
260	SLU 73	-1051	22	10409	-4.88	-31.75	0
260	SLU 74	-1072	18	10652	-4.81	-32.37	0
260	SLU 75	-1072	19	10646	-4.85	-32.35	0
260	SLU 76	-1063	20	10563	-4.88	-32.11	0
260	SLU 77	-1085	16	10806	-4.8	-32.73	0
260	SLU 78	-1085	17	10800	-4.85	-32.71	0
260	SLU 79	-1077	16	10726	-4.79	-32.49	0
260	SLU 80	-1077	17	10720	-4.84	-32.47	0
260	SLU 81	-1104	16	10886	-4.81	-33.44	0
260	SLU 82	-1103	17	10880	-4.86	-33.42	0
260	SLU 83	-1117	14	11039	-4.81	-33.79	0
260	SLU 84	-1116	15	11034	-4.85	-33.78	0
260	SLE RA 1	-690	25	6951	-3.67	-20.7	0
260	SLE RA 2	-690	26	6945	-3.72	-20.68	0
260	SLE RA 3	-704	23	7107	-3.67	-21.09	0
260	SLE RA 4	-704	24	7103	-3.7	-21.08	0
260	SLE RA 5	-699	25	7047	-3.71	-20.92	0
260	SLE RA 6	-713	22	7209	-3.66	-21.33	0
260	SLE RA 7	-713	23	7205	-3.69	-21.32	0
260	SLE RA 8	-708	22	7156	-3.66	-21.17	0
260	SLE RA 9	-707	23	7152	-3.69	-21.16	0
260	SLE RA 10	-772	19	7671	-3.73	-23.27	0
260	SLE RA 11	-786	17	7833	-3.68	-23.68	0
260	SLE RA 12	-786	17	7829	-3.71	-23.67	0
260	SLE RA 13	-780	18	7774	-3.72	-23.51	0
260	SLE RA 14	-795	15	7936	-3.67	-23.92	0
260	SLE RA 15	-794	16	7932	-3.7	-23.91	0
260	SLE RA 16	-789	16	7882	-3.67	-23.76	0
260	SLE RA 17	-789	16	7878	-3.7	-23.76	0
260	SLE RA 18	-807	15	7989	-3.68	-24.4	0
260	SLE RA 19	-807	16	7985	-3.71	-24.39	0
260	SLE RA 20	-816	14	8092	-3.68	-24.64	0
260	SLE RA 21	-815	15	8088	-3.71	-24.63	0
260	SLE FR 1	-690	25	6951	-3.67	-20.7	0
260	SLE FR 2	-690	25	6950	-3.68	-20.69	0
260	SLE FR 3	-694	24	6992	-3.67	-20.79	0
260	SLE FR 4	-725	22	7261	-3.68	-21.8	0
260	SLE FR 5	-729	21	7304	-3.67	-21.9	0
260	SLE FR 6	-749	20	7470	-3.67	-22.55	0
260	SLE QP 1	-690	25	6951	-3.67	-20.7	0
260	SLE QP 2	-725	22	7263	-3.67	-21.81	0
260	SLD 1	-337	300	6105	-10.42	-5.29	-0.03
260	SLD 2	-337	300	6105	-10.42	-5.29	-0.03
260	SLD 3	-317	-112	5628	10.57	-4.55	0.01
260	SLD 4	-317	-112	5628	10.57	-4.55	0.01
260	SLD 5	-639	730	7639	-37.54	-17.98	-0.07
260	SLD 6	-639	730	7639	-37.54	-17.98	-0.07
260	SLD 7	-573	-643	6049	32.44	-15.5	0.06
260	SLD 8	-573	-643	6049	32.44	-15.5	0.06
260	SLD 9	-878	687	8476	-39.78	-28.11	-0.07
260	SLD 10	-878	687	8476	-39.78	-28.11	-0.07
260	SLD 11	-812	-686	6887	30.19	-25.63	0.07
260	SLD 12	-812	-686	6887	30.19	-25.63	0.07
260	SLD 13	-1134	156	8897	-17.91	-39.06	-0.02
260	SLD 14	-1134	156	8897	-17.91	-39.06	-0.02
260	SLD 15	-1114	-256	8420	3.08	-38.32	0.02
260	SLD 16	-1114	-256	8420	3.08	-38.32	0.02
260	SLV 1	182	688	4574	-19.82	16.78	-0.07
260	SLV 2	182	688	4574	-19.82	16.78	-0.07
260	SLV 3	230	-298	3423	30.45	18.55	0.03
260	SLV 4	230	-298	3423	30.45	18.55	0.03
260	SLV 5	-526	1718	8202	-84.76	-12.92	-0.17
260	SLV 6	-526	1718	8202	-84.76	-12.92	-0.17
260	SLV 7	-366	-1570	4366	82.81	-7.01	0.15

Nodo	Cont.	Reazione a traslazione			Reazione a rotazione		
Ind.	N.br.	x	y	z	x	y	z
260	SLV 8	-366	-1570	4366	82.81	-7.01	0.15
260	SLV 9	-1085	1614	10160	-90.15	-36.6	-0.16
260	SLV 10	-1085	1614	10160	-90.15	-36.6	-0.16
260	SLV 11	-925	-1674	6324	77.42	-30.69	0.16
260	SLV 12	-925	-1674	6324	77.42	-30.69	0.16
260	SLV 13	-1681	342	11102	-37.79	-62.16	-0.04
260	SLV 14	-1681	342	11102	-37.79	-62.16	-0.04
260	SLV 15	-1633	-644	9951	12.48	-60.39	0.06
260	SLV 16	-1633	-644	9951	12.48	-60.39	0.06
261	SLU 1	0	206	4919	-25.1	-0.62	0
261	SLU 2	0	202	4873	-24.72	-0.59	0
261	SLU 3	0	207	5087	-25.8	-0.65	0
261	SLU 4	0	204	5060	-25.57	-0.63	0
261	SLU 5	0	200	4980	-25.06	-0.61	0
261	SLU 6	0	205	5194	-26.15	-0.67	0
261	SLU 7	0	203	5167	-25.92	-0.65	0
261	SLU 8	0	202	5132	-25.79	-0.66	0
261	SLU 9	0	200	5105	-25.56	-0.64	0
261	SLU 10	0	226	5612	-28.74	-0.67	0
261	SLU 11	0	231	5826	-29.83	-0.73	0
261	SLU 12	0	228	5799	-29.6	-0.71	0
261	SLU 13	0	224	5719	-29.09	-0.69	0
261	SLU 14	-1	229	5933	-30.17	-0.75	0
261	SLU 15	0	227	5906	-29.94	-0.73	0
261	SLU 16	-1	226	5872	-29.82	-0.74	0
261	SLU 17	0	224	5845	-29.59	-0.72	0
261	SLU 18	-1	240	5975	-30.85	-0.74	0
261	SLU 19	0	238	5948	-30.62	-0.72	0
261	SLU 20	-1	238	6082	-31.2	-0.76	0
261	SLU 21	-1	236	6055	-30.97	-0.74	0
261	SLU 22	0	228	5641	-28.9	-0.71	0
261	SLU 23	0	224	5595	-28.52	-0.67	0
261	SLU 24	0	229	5809	-29.61	-0.73	0
261	SLU 25	0	226	5782	-29.38	-0.72	0
261	SLU 26	0	222	5702	-28.87	-0.69	0
261	SLU 27	-1	227	5916	-29.95	-0.75	0
261	SLU 28	0	225	5889	-29.72	-0.74	0
261	SLU 29	-1	224	5854	-29.59	-0.75	0
261	SLU 30	0	222	5827	-29.36	-0.73	0
261	SLU 31	-1	248	6334	-32.55	-0.76	0
261	SLU 32	-1	253	6548	-33.63	-0.82	0
261	SLU 33	-1	250	6521	-33.4	-0.8	0
261	SLU 34	-1	246	6441	-32.89	-0.78	0
261	SLU 35	-1	251	6655	-33.98	-0.84	0
261	SLU 36	-1	248	6628	-33.75	-0.82	0
261	SLU 37	-1	248	6594	-33.62	-0.83	0
261	SLU 38	-1	246	6567	-33.39	-0.81	0
261	SLU 39	-1	262	6697	-34.66	-0.83	0
261	SLU 40	-1	259	6670	-34.43	-0.81	0
261	SLU 41	-1	260	6804	-35	-0.85	0
261	SLU 42	-1	258	6776	-34.77	-0.83	0
261	SLU 43	-1	260	6147	-31.33	-0.77	0
261	SLU 44	-1	256	6101	-30.94	-0.74	0
261	SLU 45	-1	261	6315	-32.03	-0.8	0
261	SLU 46	-1	259	6288	-31.8	-0.78	0
261	SLU 47	-1	254	6208	-31.29	-0.76	0
261	SLU 48	-1	259	6422	-32.37	-0.82	0
261	SLU 49	-1	257	6395	-32.14	-0.8	0
261	SLU 50	-1	256	6361	-32.01	-0.81	0
261	SLU 51	-1	254	6333	-31.78	-0.8	0
261	SLU 52	-1	280	6840	-34.97	-0.83	0
261	SLU 53	-1	285	7055	-36.05	-0.89	0
261	SLU 54	-1	283	7027	-35.82	-0.87	0
261	SLU 55	-1	278	6947	-35.31	-0.85	0
261	SLU 56	-1	283	7161	-36.4	-0.91	0
261	SLU 57	-1	281	7134	-36.17	-0.89	0
261	SLU 58	-1	280	7100	-36.04	-0.9	0
261	SLU 59	-1	278	7073	-35.81	-0.88	0
261	SLU 60	-1	294	7203	-37.08	-0.89	0
261	SLU 61	-1	292	7176	-36.85	-0.87	0
261	SLU 62	-1	292	7310	-37.42	-0.91	0
261	SLU 63	-1	290	7283	-37.19	-0.89	0
261	SLU 64	-1	282	6869	-35.13	-0.86	0
261	SLU 65	-1	278	6823	-34.75	-0.83	0
261	SLU 66	-1	283	7037	-35.83	-0.89	0
261	SLU 67	-1	281	7010	-35.6	-0.87	0
261	SLU 68	-1	276	6930	-35.09	-0.85	0
261	SLU 69	-1	281	7144	-36.18	-0.91	0
261	SLU 70	-1	279	7117	-35.95	-0.89	0
261	SLU 71	-1	278	7082	-35.82	-0.9	0
261	SLU 72	-1	276	7055	-35.59	-0.88	0
261	SLU 73	-1	302	7562	-38.77	-0.91	0
261	SLU 74	-1	307	7777	-39.86	-0.97	0
261	SLU 75	-1	305	7749	-39.63	-0.95	0
261	SLU 76	-1	300	7669	-39.12	-0.93	0
261	SLU 77	-1	305	7883	-40.2	-0.99	0
261	SLU 78	-1	303	7856	-39.97	-0.98	0
261	SLU 79	-1	302	7822	-39.85	-0.99	0
261	SLU 80	-1	300	7795	-39.62	-0.97	0
261	SLU 81	-1	316	7925	-40.88	-0.98	0

Nodo	Cont.	Reazione a traslazione			Reazione a rotazione		
Ind.	N.br.	x	y	z	x	y	z
261	SLU 82	-1	314	7898	-40.65	-0.96	0
261	SLU 83	-1	314	8032	-41.23	-1	0
261	SLU 84	-1	312	8005	-41	-0.98	0
261	SLE RA 1	0	212	5125	-26.19	-0.64	0
261	SLE RA 2	0	209	5094	-25.93	-0.62	0
261	SLE RA 3	0	213	5237	-26.65	-0.66	0
261	SLE RA 4	0	211	5219	-26.5	-0.65	0
261	SLE RA 5	0	208	5166	-26.16	-0.64	0
261	SLE RA 6	0	212	5308	-26.88	-0.68	0
261	SLE RA 7	0	210	5290	-26.73	-0.66	0
261	SLE RA 8	0	210	5267	-26.65	-0.67	0
261	SLE RA 9	0	208	5249	-26.49	-0.66	0
261	SLE RA 10	0	225	5587	-28.62	-0.68	0
261	SLE RA 11	0	229	5730	-29.34	-0.72	0
261	SLE RA 12	0	227	5712	-29.19	-0.71	0
261	SLE RA 13	0	224	5659	-28.85	-0.69	0
261	SLE RA 14	0	227	5801	-29.57	-0.73	0
261	SLE RA 15	0	226	5783	-29.42	-0.72	0
261	SLE RA 16	0	226	5760	-29.33	-0.73	0
261	SLE RA 17	0	224	5742	-29.18	-0.71	0
261	SLE RA 18	0	235	5829	-30.02	-0.72	0
261	SLE RA 19	0	233	5811	-29.87	-0.71	0
261	SLE RA 20	0	234	5900	-30.25	-0.74	0
261	SLE RA 21	0	232	5882	-30.1	-0.72	0
261	SLE FR 1	0	212	5125	-26.19	-0.64	0
261	SLE FR 2	0	212	5119	-26.14	-0.64	0
261	SLE FR 3	0	212	5153	-26.28	-0.65	0
261	SLE FR 4	0	218	5330	-27.29	-0.66	0
261	SLE FR 5	0	218	5365	-27.43	-0.67	0
261	SLE FR 6	0	223	5477	-28.11	-0.68	0
261	SLE QP 1	0	212	5125	-26.19	-0.64	0
261	SLE QP 2	0	219	5336	-27.34	-0.67	0
261	SLD 1	12	538	5254	-30.91	14.55	-0.02
261	SLD 2	12	538	5254	-30.91	14.55	-0.02
261	SLD 3	10	165	4909	-11.27	11.8	-0.01
261	SLD 4	10	165	4909	-11.27	11.8	-0.01
261	SLD 5	7	880	5836	-58.2	8.06	-0.01
261	SLD 6	7	880	5836	-58.2	8.06	-0.01
261	SLD 7	-1	-363	4684	7.27	-1.09	0
261	SLD 8	-1	-363	4684	7.27	-1.09	0
261	SLD 9	0	801	5989	-61.95	-0.24	0
261	SLD 10	0	801	5989	-61.95	-0.24	0
261	SLD 11	-8	-442	4837	3.52	-9.4	0.01
261	SLD 12	-8	-442	4837	3.52	-9.4	0.01
261	SLD 13	-11	273	5764	-43.41	-13.14	0.01
261	SLD 14	-11	273	5764	-43.41	-13.14	0.01
261	SLD 15	-13	-100	5418	-23.77	-15.88	0.02
261	SLD 16	-13	-100	5418	-23.77	-15.88	0.02
261	SLV 1	32	981	5153	-35.86	38.12	-0.04
261	SLV 2	32	981	5153	-35.86	38.12	-0.04
261	SLV 3	26	89	4316	11.09	31.13	-0.03
261	SLV 4	26	89	4316	11.09	31.13	-0.03
261	SLV 5	18	1799	6551	-101.09	21.58	-0.02
261	SLV 6	18	1799	6551	-101.09	21.58	-0.02
261	SLV 7	-1	-1172	3761	55.38	-1.73	0
261	SLV 8	-1	-1172	3761	55.38	-1.73	0
261	SLV 9	0	1609	6912	-110.06	0.4	0
261	SLV 10	0	1609	6912	-110.06	0.4	0
261	SLV 11	-19	-1361	4122	46.41	-22.91	0.02
261	SLV 12	-19	-1361	4122	46.41	-22.91	0.02
261	SLV 13	-27	349	6357	-65.76	-32.46	0.04
261	SLV 14	-27	349	6357	-65.76	-32.46	0.04
261	SLV 15	-32	-543	5519	-18.82	-39.46	0.04
261	SLV 16	-32	-543	5519	-18.82	-39.46	0.04
262	SLU 1	43	-512	6119	6.18	33.48	0.12
262	SLU 2	42	-420	6016	3.57	33.65	0.12
262	SLU 3	44	-530	6325	6.35	34.81	0.12
262	SLU 4	44	-475	6263	4.78	34.92	0.12
262	SLU 5	44	-432	6167	3.62	34.64	0.12
262	SLU 6	46	-542	6476	6.39	35.8	0.13
262	SLU 7	45	-487	6414	4.83	35.91	0.13
262	SLU 8	45	-535	6422	6.28	35.46	0.12
262	SLU 9	45	-480	6360	4.71	35.56	0.12
262	SLU 10	48	-496	6705	4.72	38.04	0.13
262	SLU 11	50	-606	7014	7.49	39.2	0.14
262	SLU 12	50	-551	6952	5.93	39.31	0.14
262	SLU 13	49	-508	6857	4.77	39.03	0.14
262	SLU 14	51	-618	7166	7.54	40.19	0.14
262	SLU 15	51	-563	7103	5.97	40.3	0.14
262	SLU 16	51	-611	7112	7.43	39.85	0.14
262	SLU 17	51	-556	7049	5.86	39.95	0.14
262	SLU 18	50	-620	7104	7.82	39.75	0.14
262	SLU 19	50	-565	7042	6.26	39.85	0.14
262	SLU 20	52	-632	7256	7.87	40.74	0.14
262	SLU 21	52	-577	7193	6.3	40.84	0.14
262	SLU 22	48	-586	6814	7.24	37.91	0.13
262	SLU 23	48	-494	6710	4.63	38.09	0.13
262	SLU 24	50	-605	7019	7.4	39.25	0.14
262	SLU 25	50	-550	6957	5.84	39.35	0.14
262	SLU 26	49	-506	6862	4.68	39.08	0.14

Nodo	Cont.	Reazione a traslazione			Reazione a rotazione		
Ind.	N.br.	x	y	z	x	y	z
262	SLU 27	51	-617	7171	7.45	40.24	0.14
262	SLU 28	51	-562	7109	5.88	40.34	0.14
262	SLU 29	51	-610	7117	7.34	39.89	0.14
262	SLU 30	51	-555	7055	5.77	40	0.14
262	SLU 31	54	-570	7400	5.78	42.48	0.15
262	SLU 32	55	-681	7709	8.55	43.64	0.15
262	SLU 33	55	-626	7647	6.98	43.74	0.15
262	SLU 34	55	-582	7551	5.82	43.47	0.15
262	SLU 35	57	-693	7860	8.6	44.63	0.16
262	SLU 36	57	-638	7798	7.03	44.73	0.16
262	SLU 37	56	-686	7806	8.49	44.28	0.16
262	SLU 38	56	-631	7744	6.92	44.39	0.16
262	SLU 39	56	-695	7799	8.88	44.18	0.16
262	SLU 40	56	-640	7736	7.31	44.29	0.16
262	SLU 41	57	-707	7950	8.93	45.17	0.16
262	SLU 42	57	-652	7888	7.36	45.28	0.16
262	SLU 43	53	-640	7717	7.68	42	0.15
262	SLU 44	53	-548	7613	5.06	42.17	0.15
262	SLU 45	55	-658	7923	7.84	43.33	0.15
262	SLU 46	55	-603	7860	6.27	43.44	0.15
262	SLU 47	55	-560	7765	5.11	43.16	0.15
262	SLU 48	56	-670	8074	7.89	44.32	0.16
262	SLU 49	56	-615	8012	6.32	44.43	0.16
262	SLU 50	56	-663	8020	7.77	43.98	0.16
262	SLU 51	56	-608	7958	6.21	44.08	0.15
262	SLU 52	59	-624	8303	6.21	46.56	0.16
262	SLU 53	61	-734	8612	8.99	47.72	0.17
262	SLU 54	61	-679	8550	7.42	47.83	0.17
262	SLU 55	60	-636	8454	6.26	47.56	0.17
262	SLU 56	62	-746	8763	9.03	48.71	0.17
262	SLU 57	62	-691	8701	7.47	48.82	0.17
262	SLU 58	61	-739	8709	8.92	48.37	0.17
262	SLU 59	61	-684	8647	7.35	48.47	0.17
262	SLU 60	61	-748	8702	9.32	48.27	0.17
262	SLU 61	61	-693	8640	7.75	48.38	0.17
262	SLU 62	63	-760	8853	9.36	49.26	0.17
262	SLU 63	63	-705	8791	7.8	49.37	0.17
262	SLU 64	59	-714	8412	8.73	46.43	0.16
262	SLU 65	59	-622	8308	6.12	46.61	0.16
262	SLU 66	61	-733	8617	8.9	47.77	0.17
262	SLU 67	61	-678	8555	7.33	47.87	0.17
262	SLU 68	60	-634	8459	6.17	47.6	0.17
262	SLU 69	62	-745	8769	8.94	48.76	0.17
262	SLU 70	62	-690	8706	7.38	48.86	0.17
262	SLU 71	62	-738	8715	8.83	48.41	0.17
262	SLU 72	61	-683	8652	7.26	48.52	0.17
262	SLU 73	64	-698	8997	7.27	51	0.18
262	SLU 74	66	-809	9306	10.04	52.16	0.18
262	SLU 75	66	-754	9244	8.48	52.26	0.18
262	SLU 76	66	-710	9149	7.32	51.99	0.18
262	SLU 77	67	-821	9458	10.09	53.15	0.19
262	SLU 78	67	-766	9396	8.52	53.25	0.19
262	SLU 79	67	-814	9404	9.98	52.8	0.19
262	SLU 80	67	-759	9342	8.41	52.91	0.19
262	SLU 81	67	-823	9396	10.37	52.7	0.19
262	SLU 82	67	-768	9334	8.81	52.81	0.19
262	SLU 83	68	-835	9548	10.42	53.69	0.19
262	SLU 84	68	-780	9486	8.85	53.8	0.19
262	SLE RA 1	44	-533	6318	6.49	34.74	0.12
262	SLE RA 2	44	-472	6249	4.74	34.86	0.12
262	SLE RA 3	45	-546	6455	6.59	35.63	0.13
262	SLE RA 4	45	-509	6413	5.55	35.7	0.13
262	SLE RA 5	45	-480	6350	4.78	35.52	0.12
262	SLE RA 6	46	-553	6556	6.63	36.29	0.13
262	SLE RA 7	46	-517	6514	5.58	36.36	0.13
262	SLE RA 8	46	-549	6520	6.55	36.06	0.13
262	SLE RA 9	46	-512	6478	5.51	36.13	0.13
262	SLE RA 10	48	-522	6708	5.51	37.79	0.13
262	SLE RA 11	49	-596	6914	7.36	38.56	0.14
262	SLE RA 12	49	-559	6873	6.31	38.63	0.14
262	SLE RA 13	49	-530	6809	5.54	38.45	0.13
262	SLE RA 14	50	-604	7015	7.39	39.22	0.14
262	SLE RA 15	50	-567	6974	6.35	39.29	0.14
262	SLE RA 16	50	-600	6979	7.32	38.99	0.14
262	SLE RA 17	49	-563	6938	6.27	39.06	0.14
262	SLE RA 18	49	-605	6974	7.58	38.92	0.14
262	SLE RA 19	49	-569	6933	6.53	38.99	0.14
262	SLE RA 20	50	-613	7075	7.61	39.58	0.14
262	SLE RA 21	50	-577	7034	6.57	39.65	0.14
262	SLE FR 1	44	-533	6318	6.49	34.74	0.12
262	SLE FR 2	44	-521	6304	6.14	34.77	0.12
262	SLE FR 3	45	-536	6358	6.5	35.01	0.12
262	SLE FR 4	46	-543	6501	6.47	36.02	0.13
262	SLE FR 5	46	-558	6555	6.83	36.26	0.13
262	SLE FR 6	47	-569	6646	7.03	36.83	0.13
262	SLE QP 1	44	-533	6318	6.49	34.74	0.12
262	SLE QP 2	46	-555	6515	6.81	36	0.13
262	SLD 1	87	-480	7867	3.32	68.25	0.24
262	SLD 2	87	-480	7867	3.32	68.25	0.24
262	SLD 3	99	-834	8232	14.09	78.89	0.27

Nodo	Cont.	Reazione a traslazione			Reazione a rotazione		
Ind.	N.br.	x	y	z	x	y	z
262	SLD 4	99	-834	8232	14.09	78.89	0.27
262	SLD 5	39	4	6367	-10.56	29.52	0.11
262	SLD 6	39	4	6367	-10.56	29.52	0.11
262	SLD 7	81	-1175	7583	25.32	65.02	0.22
262	SLD 8	81	-1175	7583	25.32	65.02	0.22
262	SLD 9	11	66	5446	-11.7	6.98	0.03
262	SLD 10	11	66	5446	-11.7	6.98	0.03
262	SLD 11	52	-1114	6662	24.19	42.47	0.14
262	SLD 12	52	-1114	6662	24.19	42.47	0.14
262	SLD 13	-8	-276	4797	-0.46	-6.9	-0.02
262	SLD 14	-8	-276	4797	-0.46	-6.9	-0.02
262	SLD 15	5	-630	5162	10.31	3.75	0.02
262	SLD 16	5	-630	5162	10.31	3.75	0.02
262	SLV 1	142	-383	9674	-1.22	111.48	0.39
262	SLV 2	142	-383	9674	-1.22	111.48	0.39
262	SLV 3	172	-1209	10545	23.87	136.94	0.46
262	SLV 4	172	-1209	10545	23.87	136.94	0.46
262	SLV 5	30	749	6142	-33.65	20.02	0.09
262	SLV 6	30	749	6142	-33.65	20.02	0.09
262	SLV 7	128	-2003	9044	49.98	104.9	0.35
262	SLV 8	128	-2003	9044	49.98	104.9	0.35
262	SLV 9	-37	893	3985	-36.36	-32.91	-0.09
262	SLV 10	-37	893	3985	-36.36	-32.91	-0.09
262	SLV 11	61	-1858	6887	47.28	51.98	0.17
262	SLV 12	61	-1858	6887	47.28	51.98	0.17
262	SLV 13	-80	99	2485	-10.24	-64.95	-0.21
262	SLV 14	-80	99	2485	-10.24	-64.95	-0.21
262	SLV 15	-51	-726	3355	14.85	-39.48	-0.13
262	SLV 16	-51	-726	3355	14.85	-39.48	-0.13
263	SLU 1	6	-482	6007	18.81	4.29	-0.01
263	SLU 2	6	-394	5894	14.64	3.38	-0.01
263	SLU 3	7	-494	6215	19.25	4.43	-0.01
263	SLU 4	6	-441	6147	16.75	3.89	-0.01
263	SLU 5	6	-398	6045	14.77	3.49	-0.01
263	SLU 6	7	-498	6366	19.37	4.54	-0.01
263	SLU 7	6	-445	6299	16.87	4	-0.01
263	SLU 8	7	-490	6310	19.06	4.51	-0.01
263	SLU 9	6	-438	6242	16.56	3.96	-0.01
263	SLU 10	6	-471	6607	17.67	3.78	-0.01
263	SLU 11	7	-572	6928	22.27	4.83	-0.01
263	SLU 12	7	-519	6860	19.77	4.29	-0.01
263	SLU 13	6	-476	6758	17.79	3.89	-0.01
263	SLU 14	7	-576	7080	22.4	4.94	-0.01
263	SLU 15	7	-523	7012	19.89	4.39	-0.01
263	SLU 16	7	-568	7023	22.08	4.91	-0.01
263	SLU 17	7	-515	6955	19.58	4.36	-0.01
263	SLU 18	7	-593	7026	23.13	4.86	-0.01
263	SLU 19	7	-540	6958	20.63	4.31	-0.01
263	SLU 20	8	-597	7177	23.25	4.97	-0.01
263	SLU 21	7	-544	7109	20.75	4.42	-0.01
263	SLU 22	7	-555	6714	21.64	4.71	-0.01
263	SLU 23	6	-467	6600	17.47	3.8	-0.01
263	SLU 24	7	-567	6922	22.07	4.85	-0.01
263	SLU 25	7	-514	6854	19.57	4.31	-0.01
263	SLU 26	6	-471	6752	17.59	3.91	-0.01
263	SLU 27	7	-571	7073	22.2	4.96	-0.01
263	SLU 28	7	-518	7005	19.7	4.42	-0.01
263	SLU 29	7	-563	7016	21.89	4.93	-0.01
263	SLU 30	7	-510	6949	19.39	4.38	-0.01
263	SLU 31	7	-544	7313	20.49	4.2	-0.01
263	SLU 32	8	-644	7635	25.1	5.25	-0.01
263	SLU 33	8	-592	7567	22.6	4.71	-0.01
263	SLU 34	7	-549	7465	20.62	4.31	-0.01
263	SLU 35	8	-649	7786	25.22	5.36	-0.01
263	SLU 36	8	-596	7718	22.72	4.82	-0.01
263	SLU 37	8	-641	7729	24.91	5.33	-0.01
263	SLU 38	8	-588	7662	22.41	4.78	-0.01
263	SLU 39	8	-666	7732	25.96	5.28	-0.01
263	SLU 40	8	-613	7664	23.45	4.73	-0.01
263	SLU 41	8	-670	7884	26.08	5.39	-0.01
263	SLU 42	8	-617	7816	23.58	4.84	-0.01
263	SLU 43	8	-601	7567	23.48	5.43	-0.01
263	SLU 44	7	-513	7454	19.32	4.52	-0.01
263	SLU 45	8	-613	7775	23.92	5.58	-0.01
263	SLU 46	8	-561	7707	21.42	5.03	-0.01
263	SLU 47	7	-518	7605	19.44	4.63	-0.01
263	SLU 48	8	-618	7926	24.05	5.68	-0.01
263	SLU 49	8	-565	7859	21.55	5.14	-0.01
263	SLU 50	8	-610	7870	23.73	5.65	-0.01
263	SLU 51	8	-557	7802	21.23	5.1	-0.01
263	SLU 52	8	-591	8167	22.34	4.92	-0.01
263	SLU 53	9	-691	8488	26.94	5.98	-0.01
263	SLU 54	8	-638	8420	24.44	5.43	-0.01
263	SLU 55	8	-595	8318	22.46	5.03	-0.01
263	SLU 56	9	-695	8639	27.07	6.08	-0.01
263	SLU 57	9	-643	8572	24.57	5.54	-0.01
263	SLU 58	9	-688	8583	26.76	6.05	-0.01
263	SLU 59	9	-635	8515	24.26	5.5	-0.01
263	SLU 60	9	-712	8586	27.8	6	-0.01
263	SLU 61	9	-659	8518	25.3	5.46	-0.01

Nodo	Cont.	Reazione a traslazione			Reazione a rotazione		
Ind.	N.br.	x	y	z	x	y	z
263	SLU 62	9	-716	8737	27.93	6.11	-0.01
263	SLU 63	9	-664	8669	25.43	5.57	-0.01
263	SLU 64	9	-674	8274	26.31	5.85	-0.01
263	SLU 65	8	-586	8160	22.14	4.94	-0.01
263	SLU 66	9	-686	8481	26.75	6	-0.01
263	SLU 67	8	-634	8414	24.25	5.45	-0.01
263	SLU 68	8	-590	8312	22.27	5.05	-0.01
263	SLU 69	9	-691	8633	26.87	6.11	-0.01
263	SLU 70	9	-638	8565	24.37	5.56	-0.01
263	SLU 71	9	-683	8576	26.56	6.07	-0.01
263	SLU 72	9	-630	8509	24.06	5.52	-0.01
263	SLU 73	9	-664	8873	25.17	5.34	-0.01
263	SLU 74	10	-764	9194	29.77	6.4	-0.02
263	SLU 75	9	-711	9127	27.27	5.85	-0.02
263	SLU 76	9	-668	9025	25.29	5.45	-0.01
263	SLU 77	10	-768	9346	29.9	6.5	-0.02
263	SLU 78	9	-715	9278	27.4	5.96	-0.02
263	SLU 79	10	-760	9289	29.58	6.47	-0.02
263	SLU 80	9	-708	9222	27.08	5.92	-0.02
263	SLU 81	10	-785	9292	30.63	6.42	-0.02
263	SLU 82	9	-732	9224	28.13	5.88	-0.02
263	SLU 83	10	-789	9444	30.75	6.53	-0.02
263	SLU 84	9	-737	9376	28.25	5.99	-0.02
263	SLE RA 1	7	-503	6209	19.62	4.41	-0.01
263	SLE RA 2	6	-444	6134	16.84	3.8	-0.01
263	SLE RA 3	7	-511	6348	19.91	4.51	-0.01
263	SLE RA 4	6	-475	6302	18.24	4.14	-0.01
263	SLE RA 5	6	-447	6235	16.92	3.87	-0.01
263	SLE RA 6	7	-514	6449	19.99	4.58	-0.01
263	SLE RA 7	7	-478	6403	18.33	4.21	-0.01
263	SLE RA 8	7	-508	6411	19.78	4.55	-0.01
263	SLE RA 9	6	-473	6366	18.12	4.19	-0.01
263	SLE RA 10	7	-496	6609	18.85	4.07	-0.01
263	SLE RA 11	7	-562	6823	21.92	4.77	-0.01
263	SLE RA 12	7	-527	6778	20.26	4.41	-0.01
263	SLE RA 13	7	-499	6710	18.94	4.14	-0.01
263	SLE RA 14	7	-565	6924	22.01	4.84	-0.01
263	SLE RA 15	7	-530	6879	20.34	4.48	-0.01
263	SLE RA 16	7	-560	6886	21.8	4.82	-0.01
263	SLE RA 17	7	-525	6841	20.13	4.46	-0.01
263	SLE RA 18	7	-577	6888	22.5	4.79	-0.01
263	SLE RA 19	7	-541	6843	20.83	4.43	-0.01
263	SLE RA 20	7	-579	6989	22.58	4.86	-0.01
263	SLE RA 21	7	-544	6944	20.91	4.5	-0.01
263	SLE FR 1	7	-503	6209	19.62	4.41	-0.01
263	SLE FR 2	6	-491	6194	19.06	4.29	-0.01
263	SLE FR 3	7	-504	6249	19.65	4.44	-0.01
263	SLE FR 4	7	-513	6398	19.93	4.4	-0.01
263	SLE FR 5	7	-526	6453	20.51	4.55	-0.01
263	SLE FR 6	7	-540	6549	21.06	4.6	-0.01
263	SLE QP 1	7	-503	6209	19.62	4.41	-0.01
263	SLE QP 2	7	-525	6413	20.48	4.52	-0.01
263	SLD 1	28	-226	4587	7.05	23.88	-0.04
263	SLD 2	28	-226	4587	7.05	23.88	-0.04
263	SLD 3	33	-606	5011	25.29	29.2	-0.05
263	SLD 4	33	-606	5011	25.29	29.2	-0.05
263	SLD 5	5	140	5221	-11.21	2.25	-0.01
263	SLD 6	5	140	5221	-11.21	2.25	-0.01
263	SLD 7	23	-1125	6636	49.59	20.01	-0.04
263	SLD 8	23	-1125	6636	49.59	20.01	-0.04
263	SLD 9	-9	75	6189	-8.62	-10.96	0.01
263	SLD 10	-9	75	6189	-8.62	-10.96	0.01
263	SLD 11	8	-1190	7605	52.18	6.8	-0.02
263	SLD 12	8	-1190	7605	52.18	6.8	-0.02
263	SLD 13	-20	-444	7814	15.68	-20.15	0.03
263	SLD 14	-20	-444	7814	15.68	-20.15	0.03
263	SLD 15	-14	-823	8239	33.92	-14.83	0.02
263	SLD 16	-14	-823	8239	33.92	-14.83	0.02
263	SLV 1	57	175	2132	-11.02	50.93	-0.08
263	SLV 2	57	175	2132	-11.02	50.93	-0.08
263	SLV 3	70	-713	3138	31.63	64.02	-0.1
263	SLV 4	70	-713	3138	31.63	64.02	-0.1
263	SLV 5	2	1032	3602	-53.65	-1.4	0
263	SLV 6	2	1032	3602	-53.65	-1.4	0
263	SLV 7	45	-1928	6957	88.51	42.22	-0.07
263	SLV 8	45	-1928	6957	88.51	42.22	-0.07
263	SLV 9	-32	878	5869	-47.55	-33.17	0.05
263	SLV 10	-32	878	5869	-47.55	-33.17	0.05
263	SLV 11	11	-2081	9224	94.62	10.45	-0.02
263	SLV 12	11	-2081	9224	94.62	10.45	-0.02
263	SLV 13	-57	-337	9687	9.33	-54.97	0.08
263	SLV 14	-57	-337	9687	9.33	-54.97	0.08
263	SLV 15	-44	-1224	10694	51.98	-41.88	0.06
263	SLV 16	-44	-1224	10694	51.98	-41.88	0.06
264	SLU 1	22	-361	2810	28.07	22.84	-0.02
264	SLU 2	22	-361	2791	27.97	22.59	-0.02
264	SLU 3	23	-378	2897	29.38	23.8	-0.02
264	SLU 4	23	-378	2886	29.32	23.65	-0.02
264	SLU 5	22	-373	2851	28.91	23.26	-0.02
264	SLU 6	23	-390	2957	30.32	24.46	-0.02

Nodo	Cont.	Reazione a traslazione			Reazione a rotazione		
Ind.	N.br.	x	y	z	x	y	z
264	SLU 7	23	-390	2946	30.26	24.31	-0.02
264	SLU 8	23	-386	2930	29.95	24.16	-0.02
264	SLU 9	23	-386	2919	29.89	24.02	-0.02
264	SLU 10	25	-421	3137	32.62	26.36	-0.02
264	SLU 11	26	-438	3243	34.02	27.57	-0.02
264	SLU 12	26	-438	3232	33.96	27.42	-0.02
264	SLU 13	26	-433	3197	33.55	27.02	-0.02
264	SLU 14	27	-450	3303	34.96	28.23	-0.02
264	SLU 15	27	-450	3292	34.9	28.08	-0.02
264	SLU 16	27	-446	3276	34.59	27.93	-0.02
264	SLU 17	27	-446	3264	34.53	27.78	-0.02
264	SLU 18	27	-447	3304	34.7	28.22	-0.02
264	SLU 19	27	-446	3293	34.64	28.08	-0.02
264	SLU 20	28	-459	3364	35.64	28.89	-0.02
264	SLU 21	27	-459	3353	35.58	28.74	-0.02
264	SLU 22	25	-420	3152	32.69	26.56	-0.02
264	SLU 23	25	-420	3133	32.59	26.31	-0.02
264	SLU 24	26	-437	3239	34	27.52	-0.02
264	SLU 25	26	-437	3228	33.94	27.37	-0.02
264	SLU 26	26	-433	3193	33.53	26.97	-0.02
264	SLU 27	27	-450	3299	34.94	28.18	-0.02
264	SLU 28	27	-450	3288	34.88	28.03	-0.02
264	SLU 29	27	-445	3272	34.57	27.88	-0.02
264	SLU 30	26	-445	3260	34.51	27.73	-0.02
264	SLU 31	29	-480	3479	37.23	30.08	-0.02
264	SLU 32	30	-498	3585	38.64	31.28	-0.02
264	SLU 33	30	-497	3574	38.58	31.14	-0.02
264	SLU 34	29	-493	3539	38.17	30.74	-0.02
264	SLU 35	30	-510	3645	39.58	31.95	-0.02
264	SLU 36	30	-510	3633	39.52	31.8	-0.02
264	SLU 37	30	-505	3617	39.21	31.65	-0.02
264	SLU 38	30	-505	3606	39.15	31.5	-0.02
264	SLU 39	30	-506	3646	39.32	31.94	-0.02
264	SLU 40	30	-506	3634	39.26	31.79	-0.02
264	SLU 41	31	-519	3706	40.26	32.6	-0.02
264	SLU 42	31	-519	3694	40.2	32.45	-0.02
264	SLU 43	27	-448	3536	34.91	28.42	-0.02
264	SLU 44	27	-448	3517	34.81	28.17	-0.02
264	SLU 45	28	-466	3623	36.22	29.38	-0.02
264	SLU 46	28	-466	3612	36.16	29.23	-0.02
264	SLU 47	28	-461	3577	35.75	28.83	-0.02
264	SLU 48	29	-478	3683	37.16	30.04	-0.02
264	SLU 49	29	-478	3672	37.1	29.89	-0.02
264	SLU 50	28	-474	3656	36.79	29.74	-0.02
264	SLU 51	28	-473	3645	36.73	29.59	-0.02
264	SLU 52	31	-508	3863	39.45	31.94	-0.02
264	SLU 53	32	-526	3969	40.86	33.15	-0.02
264	SLU 54	32	-526	3958	40.8	33	-0.02
264	SLU 55	31	-521	3923	40.39	32.6	-0.02
264	SLU 56	32	-538	4029	41.8	33.81	-0.02
264	SLU 57	32	-538	4018	41.74	33.66	-0.02
264	SLU 58	32	-534	4002	41.43	33.51	-0.02
264	SLU 59	32	-534	3990	41.37	33.36	-0.02
264	SLU 60	32	-534	4030	41.54	33.8	-0.02
264	SLU 61	32	-534	4019	41.48	33.65	-0.02
264	SLU 62	33	-547	4090	42.48	34.46	-0.02
264	SLU 63	33	-547	4079	42.42	34.31	-0.02
264	SLU 64	31	-508	3878	39.53	32.14	-0.02
264	SLU 65	30	-508	3859	39.43	31.89	-0.02
264	SLU 66	32	-525	3965	40.84	33.1	-0.02
264	SLU 67	31	-525	3954	40.78	32.95	-0.02
264	SLU 68	31	-520	3919	40.37	32.55	-0.02
264	SLU 69	32	-538	4025	41.77	33.76	-0.02
264	SLU 70	32	-538	4014	41.72	33.61	-0.02
264	SLU 71	32	-533	3998	41.41	33.46	-0.02
264	SLU 72	32	-533	3986	41.35	33.31	-0.02
264	SLU 73	34	-568	4205	44.07	35.66	-0.02
264	SLU 74	35	-585	4311	45.48	36.86	-0.03
264	SLU 75	35	-585	4299	45.42	36.71	-0.02
264	SLU 76	35	-581	4265	45.01	36.32	-0.02
264	SLU 77	36	-598	4371	46.41	37.52	-0.03
264	SLU 78	36	-598	4359	46.36	37.38	-0.03
264	SLU 79	36	-593	4343	46.05	37.23	-0.03
264	SLU 80	35	-593	4332	45.99	37.08	-0.03
264	SLU 81	36	-594	4372	46.16	37.52	-0.03
264	SLU 82	36	-594	4360	46.1	37.37	-0.03
264	SLU 83	36	-606	4431	47.1	38.18	-0.03
264	SLU 84	36	-606	4420	47.04	38.03	-0.03
264	SLE RA 1	23	-378	2908	29.39	23.9	-0.02
264	SLE RA 2	23	-378	2895	29.33	23.74	-0.02
264	SLE RA 3	23	-389	2966	30.26	24.54	-0.02
264	SLE RA 4	23	-389	2958	30.22	24.44	-0.02
264	SLE RA 5	23	-386	2935	29.95	24.18	-0.02
264	SLE RA 6	24	-397	3006	30.89	24.98	-0.02
264	SLE RA 7	24	-397	2998	30.85	24.88	-0.02
264	SLE RA 8	24	-394	2988	30.64	24.79	-0.02
264	SLE RA 9	24	-394	2980	30.6	24.69	-0.02
264	SLE RA 10	25	-418	3126	32.42	26.25	-0.02
264	SLE RA 11	26	-429	3196	33.36	27.05	-0.02
264	SLE RA 12	26	-429	3189	33.32	26.95	-0.02

Nodo	Cont.	Reazione a traslazione			Reazione a rotazione		
Ind.	N.br.	x	y	z	x	y	z
264	SLE RA 13	25	-426	3166	33.05	26.69	-0.02
264	SLE RA 14	26	-438	3236	33.98	27.5	-0.02
264	SLE RA 15	26	-438	3229	33.94	27.4	-0.02
264	SLE RA 16	26	-434	3218	33.74	27.3	-0.02
264	SLE RA 17	26	-434	3211	33.7	27.2	-0.02
264	SLE RA 18	26	-435	3237	33.81	27.49	-0.02
264	SLE RA 19	26	-435	3229	33.77	27.39	-0.02
264	SLE RA 20	27	-443	3277	34.44	27.93	-0.02
264	SLE RA 21	27	-443	3269	34.4	27.83	-0.02
264	SLE FR 1	23	-378	2908	29.39	23.9	-0.02
264	SLE FR 2	23	-378	2905	29.38	23.87	-0.02
264	SLE FR 3	23	-381	2924	29.64	24.08	-0.02
264	SLE FR 4	24	-395	3004	30.71	24.95	-0.02
264	SLE FR 5	24	-398	3023	30.97	25.16	-0.02
264	SLE FR 6	25	-406	3072	31.6	25.7	-0.02
264	SLE QP 1	23	-378	2908	29.39	23.9	-0.02
264	SLE QP 2	24	-395	3007	30.72	24.98	-0.02
264	SLD 1	38	-419	3301	32.8	35.7	-0.02
264	SLD 2	38	-419	3301	32.8	35.7	-0.02
264	SLD 3	35	-884	3426	55.24	38.94	-0.02
264	SLD 4	35	-884	3426	55.24	38.94	-0.02
264	SLD 5	33	302	2904	-2.69	23.28	-0.02
264	SLD 6	33	302	2904	-2.69	23.28	-0.02
264	SLD 7	22	-1246	3323	72.11	34.08	-0.02
264	SLD 8	22	-1246	3323	72.11	34.08	-0.02
264	SLD 9	25	456	2690	-10.67	15.88	-0.02
264	SLD 10	25	456	2690	-10.67	15.88	-0.02
264	SLD 11	15	-1092	3109	64.13	26.68	-0.01
264	SLD 12	15	-1092	3109	64.13	26.68	-0.01
264	SLD 13	13	94	2587	6.2	11.03	-0.01
264	SLD 14	13	94	2587	6.2	11.03	-0.01
264	SLD 15	10	-370	2712	28.64	14.27	-0.01
264	SLD 16	10	-370	2712	28.64	14.27	-0.01
264	SLV 1	58	-445	3691	35.24	50.08	-0.03
264	SLV 2	58	-445	3691	35.24	50.08	-0.03
264	SLV 3	50	-1557	3993	88.95	57.97	-0.03
264	SLV 4	50	-1557	3993	88.95	57.97	-0.03
264	SLV 5	46	1277	2754	-49.39	20.55	-0.03
264	SLV 6	46	1277	2754	-49.39	20.55	-0.03
264	SLV 7	20	-2431	3760	129.65	46.83	-0.01
264	SLV 8	20	-2431	3760	129.65	46.83	-0.01
264	SLV 9	28	1641	2253	-68.21	3.13	-0.02
264	SLV 10	28	1641	2253	-68.21	3.13	-0.02
264	SLV 11	2	-2067	3259	110.82	29.41	-0.01
264	SLV 12	2	-2067	3259	110.82	29.41	-0.01
264	SLV 13	-2	767	2020	-27.52	-8.01	-0.01
264	SLV 14	-2	767	2020	-27.52	-8.01	-0.01
264	SLV 15	-10	-345	2322	26.2	-0.12	0
264	SLV 16	-10	-345	2322	26.2	-0.12	0
265	SLU 1	2	-112	3580	-7.85	2.61	0.01
265	SLU 2	2	-111	3574	-7.92	2.6	0.01
265	SLU 3	2	-117	3692	-8.09	2.7	0.01
265	SLU 4	2	-117	3689	-8.14	2.7	0.01
265	SLU 5	2	-114	3644	-8.11	2.66	0.01
265	SLU 6	2	-120	3763	-8.28	2.76	0.01
265	SLU 7	2	-120	3759	-8.32	2.76	0.01
265	SLU 8	2	-118	3720	-8.22	2.73	0.01
265	SLU 9	2	-117	3717	-8.27	2.72	0.01
265	SLU 10	2	-146	4121	-8.27	3.07	0.01
265	SLU 11	2	-153	4239	-8.44	3.17	0.01
265	SLU 12	2	-152	4236	-8.48	3.17	0.01
265	SLU 13	2	-149	4191	-8.45	3.13	0.01
265	SLU 14	2	-156	4309	-8.62	3.23	0.01
265	SLU 15	2	-155	4306	-8.67	3.23	0.01
265	SLU 16	2	-153	4267	-8.57	3.19	0.01
265	SLU 17	2	-152	4264	-8.61	3.19	0.01
265	SLU 18	2	-162	4361	-8.34	3.28	0.01
265	SLU 19	2	-162	4358	-8.38	3.27	0.01
265	SLU 20	2	-165	4431	-8.53	3.34	0.01
265	SLU 21	2	-164	4428	-8.57	3.33	0.01
265	SLU 22	2	-143	4097	-8.37	3.04	0.01
265	SLU 23	2	-141	4091	-8.44	3.04	0.01
265	SLU 24	2	-148	4209	-8.61	3.14	0.01
265	SLU 25	2	-147	4206	-8.66	3.14	0.01
265	SLU 26	2	-144	4161	-8.63	3.1	0.01
265	SLU 27	2	-151	4280	-8.8	3.2	0.01
265	SLU 28	2	-150	4276	-8.84	3.2	0.01
265	SLU 29	2	-149	4237	-8.74	3.16	0.01
265	SLU 30	2	-148	4234	-8.78	3.16	0.01
265	SLU 31	2	-177	4638	-8.79	3.51	0.01
265	SLU 32	2	-183	4756	-8.96	3.61	0.01
265	SLU 33	2	-183	4753	-9	3.61	0.01
265	SLU 34	2	-180	4708	-8.97	3.57	0.01
265	SLU 35	2	-186	4826	-9.14	3.67	0.01
265	SLU 36	2	-186	4823	-9.18	3.67	0.01
265	SLU 37	2	-184	4784	-9.08	3.63	0.01
265	SLU 38	2	-183	4780	-9.13	3.63	0.01
265	SLU 39	2	-193	4878	-8.86	3.72	0.01
265	SLU 40	2	-192	4875	-8.9	3.71	0.01
265	SLU 41	3	-196	4948	-9.05	3.78	0.01

Nodo	Cont.	Reazione a traslazione			Reazione a rotazione		
Ind.	N.br.	x	y	z	x	y	z
265	SLU 42	3	-195	4945	-9.09	3.77	0.01
265	SLU 43	2	-135	4476	-10.03	3.24	0.01
265	SLU 44	2	-134	4471	-10.1	3.23	0.01
265	SLU 45	2	-141	4589	-10.27	3.33	0.01
265	SLU 46	2	-140	4586	-10.31	3.33	0.01
265	SLU 47	2	-137	4541	-10.29	3.29	0.01
265	SLU 48	2	-144	4659	-10.46	3.39	0.01
265	SLU 49	2	-143	4656	-10.5	3.39	0.01
265	SLU 50	2	-141	4616	-10.4	3.36	0.01
265	SLU 51	2	-140	4613	-10.44	3.35	0.01
265	SLU 52	2	-169	5018	-10.44	3.7	0.01
265	SLU 53	3	-176	5136	-10.61	3.8	0.01
265	SLU 54	3	-175	5133	-10.66	3.8	0.01
265	SLU 55	2	-172	5088	-10.63	3.76	0.01
265	SLU 56	3	-179	5206	-10.8	3.86	0.01
265	SLU 57	3	-178	5203	-10.84	3.86	0.01
265	SLU 58	3	-176	5163	-10.74	3.83	0.01
265	SLU 59	3	-175	5160	-10.79	3.82	0.01
265	SLU 60	3	-185	5257	-10.52	3.91	0.01
265	SLU 61	3	-185	5254	-10.56	3.91	0.01
265	SLU 62	3	-188	5327	-10.7	3.97	0.01
265	SLU 63	3	-188	5324	-10.75	3.97	0.01
265	SLU 64	2	-166	4993	-10.55	3.68	0.01
265	SLU 65	2	-165	4988	-10.62	3.67	0.01
265	SLU 66	2	-171	5106	-10.79	3.77	0.01
265	SLU 67	2	-170	5103	-10.83	3.77	0.01
265	SLU 68	2	-167	5058	-10.81	3.73	0.01
265	SLU 69	3	-174	5176	-10.98	3.83	0.01
265	SLU 70	3	-173	5173	-11.02	3.83	0.01
265	SLU 71	2	-172	5133	-10.92	3.8	0.01
265	SLU 72	2	-171	5130	-10.96	3.79	0.01
265	SLU 73	3	-200	5535	-10.96	4.14	0.02
265	SLU 74	3	-207	5653	-11.13	4.24	0.02
265	SLU 75	3	-206	5650	-11.18	4.24	0.02
265	SLU 76	3	-203	5605	-11.15	4.2	0.02
265	SLU 77	3	-210	5723	-11.32	4.3	0.02
265	SLU 78	3	-209	5720	-11.36	4.3	0.02
265	SLU 79	3	-207	5680	-11.26	4.26	0.02
265	SLU 80	3	-206	5677	-11.31	4.26	0.02
265	SLU 81	3	-216	5774	-11.04	4.35	0.02
265	SLU 82	3	-215	5771	-11.08	4.34	0.02
265	SLU 83	3	-219	5844	-11.22	4.41	0.02
265	SLU 84	3	-218	5841	-11.27	4.4	0.02
265	SLE RA 1	2	-121	3727	-8	2.73	0.01
265	SLE RA 2	2	-120	3724	-8.05	2.73	0.01
265	SLE RA 3	2	-124	3803	-8.16	2.79	0.01
265	SLE RA 4	2	-124	3800	-8.19	2.79	0.01
265	SLE RA 5	2	-122	3771	-8.17	2.77	0.01
265	SLE RA 6	2	-126	3849	-8.28	2.83	0.01
265	SLE RA 7	2	-126	3847	-8.31	2.83	0.01
265	SLE RA 8	2	-125	3821	-8.25	2.81	0.01
265	SLE RA 9	2	-124	3819	-8.28	2.81	0.01
265	SLE RA 10	2	-143	4088	-8.28	3.04	0.01
265	SLE RA 11	2	-148	4167	-8.39	3.11	0.01
265	SLE RA 12	2	-147	4165	-8.42	3.11	0.01
265	SLE RA 13	2	-145	4135	-8.4	3.08	0.01
265	SLE RA 14	2	-150	4214	-8.51	3.15	0.01
265	SLE RA 15	2	-149	4212	-8.54	3.15	0.01
265	SLE RA 16	2	-148	4185	-8.48	3.12	0.01
265	SLE RA 17	2	-148	4183	-8.5	3.12	0.01
265	SLE RA 18	2	-154	4248	-8.33	3.18	0.01
265	SLE RA 19	2	-154	4246	-8.36	3.18	0.01
265	SLE RA 20	2	-156	4295	-8.45	3.22	0.01
265	SLE RA 21	2	-156	4293	-8.48	3.22	0.01
265	SLE FR 1	2	-121	3727	-8	2.73	0.01
265	SLE FR 2	2	-121	3727	-8.01	2.73	0.01
265	SLE FR 3	2	-122	3746	-8.05	2.75	0.01
265	SLE FR 4	2	-131	3883	-8.11	2.86	0.01
265	SLE FR 5	2	-132	3902	-8.15	2.88	0.01
265	SLE FR 6	2	-138	3988	-8.16	2.95	0.01
265	SLE QP 1	2	-121	3727	-8	2.73	0.01
265	SLE QP 2	2	-131	3884	-8.1	2.87	0.01
265	SLD 1	4	-64	4547	-12.52	3.97	0.01
265	SLD 2	4	-64	4547	-12.52	3.97	0.01
265	SLD 3	8	-412	4175	3.78	5.48	0.01
265	SLD 4	8	-412	4175	3.78	5.48	0.01
265	SLD 5	-3	417	4646	-34.14	0.91	0.01
265	SLD 6	-3	417	4646	-34.14	0.91	0.01
265	SLD 7	10	-743	3408	20.19	5.94	0.02
265	SLD 8	10	-743	3408	20.19	5.94	0.02
265	SLD 9	-6	481	4359	-36.38	-0.21	0.01
265	SLD 10	-6	481	4359	-36.38	-0.21	0.01
265	SLD 11	7	-679	3121	17.95	4.83	0.01
265	SLD 12	7	-679	3121	17.95	4.83	0.01
265	SLD 13	-5	150	3592	-19.98	0.26	0.01
265	SLD 14	-5	150	3592	-19.98	0.26	0.01
265	SLD 15	-1	-198	3220	-3.68	1.77	0.01
265	SLD 16	-1	-198	3220	-3.68	1.77	0.01
265	SLV 1	8	34	5450	-18.76	5.36	0.01
265	SLV 2	8	34	5450	-18.76	5.36	0.01

Nodo	Cont.	Reazione a traslazione			Reazione a rotazione		
Ind.	N.br.	x	y	z	x	y	z
265	SLV 3	17	-803	4553	20.36	9.07	0.02
265	SLV 4	17	-803	4553	20.36	9.07	0.02
265	SLV 5	-11	1188	5714	-70.62	-2.02	0
265	SLV 6	-11	1188	5714	-70.62	-2.02	0
265	SLV 7	21	-1602	2724	59.77	10.35	0.02
265	SLV 8	21	-1602	2724	59.77	10.35	0.02
265	SLV 9	-17	1340	5043	-75.96	-4.62	0
265	SLV 10	-17	1340	5043	-75.96	-4.62	0
265	SLV 11	15	-1450	2053	54.43	7.75	0.02
265	SLV 12	15	-1450	2053	54.43	7.75	0.02
265	SLV 13	-13	541	3214	-36.55	-3.34	0
265	SLV 14	-13	541	3214	-36.55	-3.34	0
265	SLV 15	-4	-296	2317	2.56	0.37	0.01
265	SLV 16	-4	-296	2317	2.56	0.37	0.01
266	SLU 1	-2	-61	4486	1.78	-0.33	-0.01
266	SLU 2	-2	-59	4481	1.69	-0.32	-0.01
266	SLU 3	-3	-66	4641	1.95	-0.34	-0.01
266	SLU 4	-3	-65	4638	1.9	-0.34	-0.01
266	SLU 5	-3	-62	4582	1.8	-0.33	-0.01
266	SLU 6	-3	-69	4743	2.06	-0.35	-0.01
266	SLU 7	-3	-68	4739	2.01	-0.34	-0.01
266	SLU 8	-3	-67	4690	2	-0.34	-0.01
266	SLU 9	-3	-66	4686	1.95	-0.34	-0.01
266	SLU 10	-3	-89	5181	2.78	-0.41	-0.01
266	SLU 11	-3	-96	5342	3.04	-0.42	-0.01
266	SLU 12	-3	-95	5338	2.98	-0.42	-0.01
266	SLU 13	-3	-92	5283	2.89	-0.42	-0.01
266	SLU 14	-3	-99	5443	3.14	-0.43	-0.01
266	SLU 15	-3	-98	5440	3.09	-0.43	-0.01
266	SLU 16	-3	-97	5390	3.08	-0.43	-0.01
266	SLU 17	-3	-96	5387	3.03	-0.43	-0.01
266	SLU 18	-3	-104	5487	3.33	-0.45	-0.01
266	SLU 19	-3	-103	5484	3.28	-0.45	-0.01
266	SLU 20	-3	-107	5589	3.44	-0.46	-0.01
266	SLU 21	-3	-106	5585	3.39	-0.45	-0.01
266	SLU 22	-3	-86	5151	2.66	-0.4	-0.01
266	SLU 23	-3	-84	5145	2.57	-0.4	-0.01
266	SLU 24	-3	-90	5306	2.83	-0.41	-0.01
266	SLU 25	-3	-89	5302	2.77	-0.41	-0.01
266	SLU 26	-3	-87	5247	2.68	-0.4	-0.01
266	SLU 27	-3	-94	5407	2.93	-0.42	-0.01
266	SLU 28	-3	-92	5404	2.88	-0.42	-0.01
266	SLU 29	-3	-92	5354	2.88	-0.41	-0.01
266	SLU 30	-3	-91	5351	2.82	-0.41	-0.01
266	SLU 31	-3	-114	5846	3.65	-0.48	-0.01
266	SLU 32	-3	-120	6006	3.91	-0.49	-0.01
266	SLU 33	-3	-119	6003	3.86	-0.49	-0.01
266	SLU 34	-3	-117	5948	3.76	-0.49	-0.01
266	SLU 35	-4	-124	6108	4.02	-0.5	-0.01
266	SLU 36	-4	-122	6105	3.96	-0.5	-0.01
266	SLU 37	-3	-122	6055	3.96	-0.5	-0.01
266	SLU 38	-3	-121	6052	3.9	-0.5	-0.01
266	SLU 39	-4	-128	6152	4.21	-0.52	-0.01
266	SLU 40	-4	-127	6148	4.15	-0.52	-0.01
266	SLU 41	-4	-132	6253	4.31	-0.53	-0.01
266	SLU 42	-4	-130	6250	4.26	-0.52	-0.01
266	SLU 43	-3	-71	5604	2.02	-0.4	-0.01
266	SLU 44	-3	-69	5598	1.93	-0.4	-0.01
266	SLU 45	-3	-76	5759	2.19	-0.41	-0.01
266	SLU 46	-3	-74	5756	2.13	-0.41	-0.01
266	SLU 47	-3	-72	5700	2.04	-0.41	-0.01
266	SLU 48	-3	-79	5861	2.3	-0.42	-0.01
266	SLU 49	-3	-78	5857	2.24	-0.42	-0.01
266	SLU 50	-3	-77	5807	2.24	-0.42	-0.01
266	SLU 51	-3	-76	5804	2.18	-0.42	-0.01
266	SLU 52	-4	-99	6299	3.01	-0.48	-0.01
266	SLU 53	-4	-106	6460	3.27	-0.5	-0.02
266	SLU 54	-4	-104	6456	3.22	-0.5	-0.02
266	SLU 55	-4	-102	6401	3.12	-0.49	-0.01
266	SLU 56	-4	-109	6561	3.38	-0.5	-0.02
266	SLU 57	-4	-108	6558	3.33	-0.5	-0.02
266	SLU 58	-4	-107	6508	3.32	-0.5	-0.02
266	SLU 59	-4	-106	6505	3.27	-0.5	-0.02
266	SLU 60	-4	-114	6605	3.57	-0.52	-0.02
266	SLU 61	-4	-113	6602	3.51	-0.52	-0.02
266	SLU 62	-4	-117	6707	3.68	-0.53	-0.02
266	SLU 63	-4	-116	6703	3.62	-0.53	-0.02
266	SLU 64	-3	-96	6269	2.89	-0.47	-0.01
266	SLU 65	-3	-93	6263	2.8	-0.47	-0.01
266	SLU 66	-4	-100	6424	3.06	-0.48	-0.01
266	SLU 67	-4	-99	6420	3.01	-0.48	-0.01
266	SLU 68	-4	-97	6365	2.91	-0.48	-0.01
266	SLU 69	-4	-103	6525	3.17	-0.49	-0.02
266	SLU 70	-4	-102	6522	3.12	-0.49	-0.02
266	SLU 71	-4	-102	6472	3.11	-0.49	-0.01
266	SLU 72	-4	-101	6469	3.06	-0.49	-0.01
266	SLU 73	-4	-123	6964	3.89	-0.55	-0.02
266	SLU 74	-4	-130	7124	4.15	-0.57	-0.02
266	SLU 75	-4	-129	7121	4.09	-0.57	-0.02
266	SLU 76	-4	-127	7066	4	-0.56	-0.02

Nodo	Cont.	Reazione a traslazione			Reazione a rotazione		
Ind.	N.br.	x	y	z	x	y	z
266	SLU 77	-4	-133	7226	4.25	-0.58	-0.02
266	SLU 78	-4	-132	7223	4.2	-0.57	-0.02
266	SLU 79	-4	-132	7173	4.19	-0.57	-0.02
266	SLU 80	-4	-131	7169	4.14	-0.57	-0.02
266	SLU 81	-4	-138	7270	4.44	-0.59	-0.02
266	SLU 82	-4	-137	7266	4.39	-0.59	-0.02
266	SLU 83	-4	-142	7371	4.55	-0.6	-0.02
266	SLU 84	-4	-140	7368	4.5	-0.6	-0.02
266	SLE RA 1	-3	-68	4676	2.03	-0.35	-0.01
266	SLE RA 2	-3	-67	4672	1.97	-0.35	-0.01
266	SLE RA 3	-3	-71	4779	2.15	-0.36	-0.01
266	SLE RA 4	-3	-70	4777	2.11	-0.35	-0.01
266	SLE RA 5	-3	-69	4740	2.05	-0.35	-0.01
266	SLE RA 6	-3	-73	4847	2.22	-0.36	-0.01
266	SLE RA 7	-3	-73	4845	2.18	-0.36	-0.01
266	SLE RA 8	-3	-72	4812	2.18	-0.36	-0.01
266	SLE RA 9	-3	-71	4809	2.14	-0.36	-0.01
266	SLE RA 10	-3	-87	5139	2.7	-0.4	-0.01
266	SLE RA 11	-3	-91	5246	2.87	-0.41	-0.01
266	SLE RA 12	-3	-90	5244	2.83	-0.41	-0.01
266	SLE RA 13	-3	-89	5207	2.77	-0.41	-0.01
266	SLE RA 14	-3	-93	5314	2.94	-0.42	-0.01
266	SLE RA 15	-3	-93	5312	2.9	-0.42	-0.01
266	SLE RA 16	-3	-92	5279	2.9	-0.41	-0.01
266	SLE RA 17	-3	-91	5277	2.87	-0.41	-0.01
266	SLE RA 18	-3	-97	5343	3.07	-0.43	-0.01
266	SLE RA 19	-3	-96	5341	3.03	-0.43	-0.01
266	SLE RA 20	-3	-99	5411	3.14	-0.43	-0.01
266	SLE RA 21	-3	-98	5409	3.1	-0.43	-0.01
266	SLE FR 1	-3	-68	4676	2.03	-0.35	-0.01
266	SLE FR 2	-3	-68	4675	2.02	-0.35	-0.01
266	SLE FR 3	-3	-69	4703	2.06	-0.35	-0.01
266	SLE FR 4	-3	-76	4875	2.33	-0.37	-0.01
266	SLE FR 5	-3	-78	4903	2.37	-0.37	-0.01
266	SLE FR 6	-3	-82	5010	2.55	-0.39	-0.01
266	SLE QP 1	-3	-68	4676	2.03	-0.35	-0.01
266	SLE QP 2	-3	-77	4876	2.34	-0.37	-0.01
266	SLD 1	3	280	4312	-13.89	2.11	-0.01
266	SLD 2	3	280	4312	-13.89	2.11	-0.01
266	SLD 3	-1	-215	4134	10.25	0.18	-0.01
266	SLD 4	-1	-215	4134	10.25	0.18	-0.01
266	SLD 5	6	781	4977	-39.14	3.3	-0.02
266	SLD 6	6	781	4977	-39.14	3.3	-0.02
266	SLD 7	-9	-869	4383	41.33	-3.13	0
266	SLD 8	-9	-869	4383	41.33	-3.13	0
266	SLD 9	4	716	5369	-36.65	2.39	-0.02
266	SLD 10	4	716	5369	-36.65	2.39	-0.02
266	SLD 11	-11	-934	4775	43.83	-4.05	0
266	SLD 12	-11	-934	4775	43.83	-4.05	0
266	SLD 13	-4	62	5618	-5.56	-0.93	-0.02
266	SLD 14	-4	62	5618	-5.56	-0.93	-0.02
266	SLD 15	-8	-433	5440	18.58	-2.86	-0.01
266	SLD 16	-8	-433	5440	18.58	-2.86	-0.01
266	SLV 1	11	777	3565	-36.64	5.67	-0.01
266	SLV 2	11	777	3565	-36.64	5.67	-0.01
266	SLV 3	0	-409	3134	21.18	0.74	0
266	SLV 4	0	-409	3134	21.18	0.74	0
266	SLV 5	19	1977	5136	-97.05	8.91	-0.03
266	SLV 6	19	1977	5136	-97.05	8.91	-0.03
266	SLV 7	-19	-1974	3700	95.7	-7.51	0.01
266	SLV 8	-19	-1974	3700	95.7	-7.51	0.01
266	SLV 9	14	1821	6052	-91.01	6.76	-0.04
266	SLV 10	14	1821	6052	-91.01	6.76	-0.04
266	SLV 11	-24	-2130	4616	101.74	-9.65	0.01
266	SLV 12	-24	-2130	4616	101.74	-9.65	0.01
266	SLV 13	-5	255	6618	-16.5	-1.49	-0.03
266	SLV 14	-5	255	6618	-16.5	-1.49	-0.03
266	SLV 15	-17	-930	6187	41.33	-6.41	-0.01
266	SLV 16	-17	-930	6187	41.33	-6.41	-0.01
267	SLU 1	0	-157	4694	18.71	-0.51	0
267	SLU 2	0	-158	4659	18.71	-0.48	0
267	SLU 3	0	-170	4848	19.77	-0.54	0
267	SLU 4	0	-171	4827	19.77	-0.52	0
267	SLU 5	0	-169	4755	19.51	-0.5	0
267	SLU 6	0	-181	4944	20.57	-0.55	0
267	SLU 7	0	-182	4923	20.57	-0.54	0
267	SLU 8	0	-179	4886	20.31	-0.55	0
267	SLU 9	0	-180	4865	20.31	-0.53	0
267	SLU 10	0	-197	5352	22.65	-0.55	0
267	SLU 11	0	-210	5542	23.71	-0.6	0
267	SLU 12	0	-210	5521	23.71	-0.58	0
267	SLU 13	0	-209	5448	23.45	-0.57	0
267	SLU 14	0	-221	5638	24.51	-0.62	0
267	SLU 15	0	-221	5617	24.51	-0.6	0
267	SLU 16	0	-219	5580	24.25	-0.61	0
267	SLU 17	0	-219	5559	24.25	-0.59	0
267	SLU 18	0	-213	5685	24.34	-0.6	0
267	SLU 19	0	-214	5664	24.34	-0.59	0
267	SLU 20	0	-224	5781	25.14	-0.62	0
267	SLU 21	0	-225	5760	25.14	-0.6	0

Nodo	Cont.	Reazione a traslazione			Reazione a rotazione		
Ind.	N.br.	x	y	z	x	y	z
267	SLU 22	0	-196	5370	22.52	-0.58	0
267	SLU 23	0	-197	5334	22.51	-0.55	0
267	SLU 24	0	-209	5524	23.57	-0.6	0
267	SLU 25	0	-210	5503	23.57	-0.59	0
267	SLU 26	0	-208	5430	23.32	-0.57	0
267	SLU 27	0	-220	5620	24.38	-0.62	0
267	SLU 28	0	-221	5599	24.37	-0.61	0
267	SLU 29	0	-218	5562	24.12	-0.62	0
267	SLU 30	0	-219	5541	24.12	-0.6	0
267	SLU 31	0	-236	6028	26.45	-0.62	0
267	SLU 32	0	-249	6218	27.51	-0.67	0
267	SLU 33	0	-249	6197	27.51	-0.65	0
267	SLU 34	0	-248	6124	27.25	-0.64	0
267	SLU 35	0	-260	6314	28.31	-0.69	0
267	SLU 36	0	-260	6293	28.31	-0.67	0
267	SLU 37	0	-258	6256	28.06	-0.68	0
267	SLU 38	0	-258	6234	28.05	-0.66	0
267	SLU 39	0	-252	6361	28.14	-0.67	0
267	SLU 40	0	-253	6340	28.14	-0.66	0
267	SLU 41	0	-263	6457	28.94	-0.69	0
267	SLU 42	0	-264	6436	28.94	-0.67	0
267	SLU 43	0	-191	5871	23.02	-0.64	0
267	SLU 44	0	-191	5835	23.02	-0.61	0
267	SLU 45	0	-204	6025	24.08	-0.66	0
267	SLU 46	0	-204	6004	24.08	-0.65	0
267	SLU 47	0	-203	5931	23.82	-0.63	0
267	SLU 48	0	-215	6121	24.88	-0.68	0
267	SLU 49	0	-216	6100	24.88	-0.67	0
267	SLU 50	0	-213	6063	24.62	-0.68	0
267	SLU 51	0	-214	6041	24.62	-0.66	0
267	SLU 52	-1	-231	6529	26.96	-0.68	0
267	SLU 53	-1	-243	6719	28.02	-0.73	0
267	SLU 54	-1	-244	6697	28.01	-0.71	0
267	SLU 55	-1	-242	6625	27.76	-0.7	0
267	SLU 56	-1	-255	6815	28.82	-0.75	0
267	SLU 57	-1	-255	6793	28.82	-0.73	0
267	SLU 58	-1	-253	6756	28.56	-0.74	0
267	SLU 59	-1	-253	6735	28.56	-0.72	0
267	SLU 60	-1	-247	6862	28.65	-0.73	0
267	SLU 61	-1	-247	6840	28.64	-0.72	0
267	SLU 62	-1	-258	6958	29.45	-0.75	0
267	SLU 63	-1	-259	6936	29.44	-0.73	0
267	SLU 64	-1	-230	6546	26.83	-0.71	0
267	SLU 65	-1	-231	6511	26.82	-0.68	0
267	SLU 66	-1	-243	6701	27.88	-0.73	0
267	SLU 67	-1	-243	6679	27.88	-0.72	0
267	SLU 68	-1	-242	6607	27.62	-0.7	0
267	SLU 69	-1	-254	6797	28.68	-0.75	0
267	SLU 70	-1	-255	6775	28.68	-0.74	0
267	SLU 71	-1	-252	6738	28.43	-0.75	0
267	SLU 72	-1	-253	6717	28.43	-0.73	0
267	SLU 73	-1	-270	7205	30.76	-0.75	0
267	SLU 74	-1	-282	7395	31.82	-0.8	0
267	SLU 75	-1	-283	7373	31.82	-0.78	0
267	SLU 76	-1	-281	7301	31.56	-0.76	0
267	SLU 77	-1	-294	7491	32.62	-0.82	0
267	SLU 78	-1	-294	7469	32.62	-0.8	0
267	SLU 79	-1	-292	7432	32.36	-0.81	0
267	SLU 80	-1	-292	7411	32.36	-0.79	0
267	SLU 81	-1	-286	7538	32.45	-0.8	0
267	SLU 82	-1	-286	7516	32.45	-0.79	0
267	SLU 83	-1	-297	7634	33.25	-0.82	0
267	SLU 84	-1	-298	7612	33.25	-0.8	0
267	SLE RA 1	0	-168	4887	19.8	-0.53	0
267	SLE RA 2	0	-169	4863	19.8	-0.51	0
267	SLE RA 3	0	-177	4990	20.5	-0.55	0
267	SLE RA 4	0	-177	4976	20.5	-0.54	0
267	SLE RA 5	0	-176	4927	20.33	-0.52	0
267	SLE RA 6	0	-184	5054	21.04	-0.56	0
267	SLE RA 7	0	-185	5040	21.04	-0.55	0
267	SLE RA 8	0	-183	5015	20.87	-0.55	0
267	SLE RA 9	0	-183	5001	20.87	-0.54	0
267	SLE RA 10	0	-195	5326	22.42	-0.56	0
267	SLE RA 11	0	-203	5453	23.13	-0.59	0
267	SLE RA 12	0	-204	5438	23.13	-0.58	0
267	SLE RA 13	0	-202	5390	22.96	-0.57	0
267	SLE RA 14	0	-211	5517	23.66	-0.6	0
267	SLE RA 15	0	-211	5502	23.66	-0.59	0
267	SLE RA 16	0	-209	5478	23.49	-0.6	0
267	SLE RA 17	0	-210	5463	23.49	-0.59	0
267	SLE RA 18	0	-206	5548	23.55	-0.59	0
267	SLE RA 19	0	-206	5534	23.55	-0.58	0
267	SLE RA 20	0	-213	5612	24.08	-0.6	0
267	SLE RA 21	0	-213	5598	24.08	-0.59	0
267	SLE FR 1	0	-168	4887	19.8	-0.53	0
267	SLE FR 2	0	-168	4882	19.8	-0.53	0
267	SLE FR 3	0	-171	4913	20.01	-0.54	0
267	SLE FR 4	0	-179	5081	20.92	-0.55	0
267	SLE FR 5	0	-182	5111	21.14	-0.55	0
267	SLE FR 6	0	-187	5218	21.67	-0.56	0

Nodo	Cont.	Reazione a traslazione			Reazione a rotazione		
Ind.	N.br.	x	y	z	x	y	z
267	SLE QP 1	0	-168	4887	19.8	-0.53	0
267	SLE QP 2	0	-179	5085	20.92	-0.55	0
267	SLD 1	11	187	4933	1.15	13.12	-0.02
267	SLD 2	11	187	4933	1.15	13.12	-0.02
267	SLD 3	9	-208	4737	21.04	10.67	-0.02
267	SLD 4	9	-208	4737	21.04	10.67	-0.02
267	SLD 5	6	528	5337	-15.18	7.26	-0.01
267	SLD 6	6	528	5337	-15.18	7.26	-0.01
267	SLD 7	-1	-786	4683	51.13	-0.89	0
267	SLD 8	-1	-786	4683	51.13	-0.89	0
267	SLD 9	0	427	5487	-9.29	-0.21	0
267	SLD 10	0	427	5487	-9.29	-0.21	0
267	SLD 11	-7	-887	4833	57.03	-8.36	0.01
267	SLD 12	-7	-887	4833	57.03	-8.36	0.01
267	SLD 13	-10	-151	5434	20.81	-11.77	0.02
267	SLD 14	-10	-151	5434	20.81	-11.77	0.02
267	SLD 15	-12	-545	5238	40.7	-14.22	0.02
267	SLD 16	-12	-545	5238	40.7	-14.22	0.02
267	SLV 1	29	691	4738	-26.02	34.12	-0.05
267	SLV 2	29	691	4738	-26.02	34.12	-0.05
267	SLV 3	24	-250	4257	21.46	27.88	-0.04
267	SLV 4	24	-250	4257	21.46	27.88	-0.04
267	SLV 5	16	1510	5711	-65.17	19.32	-0.03
267	SLV 6	16	1510	5711	-65.17	19.32	-0.03
267	SLV 7	-1	-1629	4107	93.1	-1.49	0
267	SLV 8	-1	-1629	4107	93.1	-1.49	0
267	SLV 9	0	1270	6064	-51.25	0.39	0
267	SLV 10	0	1270	6064	-51.25	0.39	0
267	SLV 11	-17	-1868	4460	107.02	-20.42	0.03
267	SLV 12	-17	-1868	4460	107.02	-20.42	0.03
267	SLV 13	-25	-108	5914	20.39	-28.98	0.04
267	SLV 14	-25	-108	5914	20.39	-28.98	0.04
267	SLV 15	-30	-1050	5433	67.87	-35.22	0.05
267	SLV 16	-30	-1050	5433	67.87	-35.22	0.05
268	SLU 1	42	-813	6025	34.72	33.29	0.17
268	SLU 2	42	-720	5914	31.63	33.32	0.17
268	SLU 3	44	-845	6231	36.15	34.63	0.18
268	SLU 4	44	-790	6164	34.29	34.64	0.18
268	SLU 5	43	-743	6067	32.67	34.31	0.18
268	SLU 6	45	-868	6385	37.2	35.62	0.18
268	SLU 7	45	-812	6318	35.34	35.63	0.18
268	SLU 8	45	-858	6333	36.82	35.28	0.18
268	SLU 9	44	-802	6266	34.96	35.29	0.18
268	SLU 10	47	-828	6585	36.07	37.63	0.19
268	SLU 11	49	-952	6903	40.6	38.94	0.2
268	SLU 12	49	-897	6836	38.74	38.96	0.2
268	SLU 13	48	-850	6739	37.12	38.63	0.2
268	SLU 14	50	-975	7057	41.65	39.94	0.21
268	SLU 15	50	-919	6989	39.79	39.95	0.2
268	SLU 16	50	-965	7005	41.26	39.6	0.2
268	SLU 17	50	-909	6938	39.41	39.61	0.2
268	SLU 18	50	-966	6985	41.07	39.46	0.2
268	SLU 19	50	-911	6918	39.22	39.47	0.2
268	SLU 20	51	-989	7139	42.12	40.45	0.21
268	SLU 21	51	-933	7072	40.27	40.47	0.21
268	SLU 22	48	-922	6705	39.29	37.67	0.19
268	SLU 23	47	-829	6593	36.19	37.69	0.19
268	SLU 24	49	-954	6911	40.72	39	0.2
268	SLU 25	49	-898	6843	38.86	39.01	0.2
268	SLU 26	49	-851	6747	37.24	38.68	0.2
268	SLU 27	51	-976	7064	41.76	39.99	0.21
268	SLU 28	50	-920	6997	39.91	40.01	0.21
268	SLU 29	50	-967	7013	41.38	39.65	0.2
268	SLU 30	50	-911	6946	39.53	39.67	0.2
268	SLU 31	53	-936	7265	40.64	42	0.21
268	SLU 32	55	-1061	7582	45.16	43.31	0.22
268	SLU 33	55	-1005	7515	43.31	43.33	0.22
268	SLU 34	54	-958	7419	41.69	43	0.22
268	SLU 35	56	-1083	7736	46.21	44.31	0.23
268	SLU 36	56	-1027	7669	44.36	44.32	0.23
268	SLU 37	56	-1074	7685	45.83	43.97	0.23
268	SLU 38	55	-1018	7618	43.97	43.98	0.23
268	SLU 39	55	-1075	7665	45.64	43.83	0.23
268	SLU 40	55	-1019	7598	43.78	43.84	0.22
268	SLU 41	57	-1097	7819	46.69	44.82	0.23
268	SLU 42	56	-1041	7752	44.83	44.84	0.23
268	SLU 43	53	-1020	7600	43.57	41.78	0.22
268	SLU 44	53	-927	7488	40.48	41.81	0.21
268	SLU 45	55	-1052	7805	45	43.12	0.22
268	SLU 46	54	-996	7738	43.14	43.13	0.22
268	SLU 47	54	-950	7642	41.52	42.8	0.22
268	SLU 48	56	-1074	7959	46.05	44.11	0.23
268	SLU 49	56	-1019	7892	44.19	44.12	0.23
268	SLU 50	55	-1065	7908	45.67	43.77	0.23
268	SLU 51	55	-1009	7841	43.81	43.78	0.22
268	SLU 52	58	-1034	8160	44.92	46.12	0.24
268	SLU 53	60	-1159	8477	49.45	47.43	0.24
268	SLU 54	60	-1103	8410	47.59	47.44	0.24
268	SLU 55	59	-1057	8314	45.97	47.11	0.24
268	SLU 56	61	-1181	8631	50.5	48.42	0.25

Nodo	Cont.	Reazione a traslazione			Reazione a rotazione		
Ind.	N.br.	x	y	z	x	y	z
268	SLU 57	61	-1126	8564	48.64	48.44	0.25
268	SLU 58	61	-1172	8580	50.12	48.09	0.25
268	SLU 59	61	-1116	8512	48.26	48.1	0.25
268	SLU 60	61	-1173	8560	49.92	47.95	0.25
268	SLU 61	60	-1117	8493	48.07	47.96	0.25
268	SLU 62	62	-1195	8714	50.97	48.94	0.25
268	SLU 63	62	-1140	8647	49.12	48.95	0.25
268	SLU 64	58	-1129	8280	48.14	46.15	0.24
268	SLU 65	58	-1036	8168	45.04	46.18	0.24
268	SLU 66	60	-1161	8485	49.57	47.49	0.24
268	SLU 67	60	-1105	8418	47.71	47.5	0.24
268	SLU 68	59	-1058	8322	46.09	47.17	0.24
268	SLU 69	61	-1183	8639	50.61	48.48	0.25
268	SLU 70	61	-1127	8572	48.76	48.49	0.25
268	SLU 71	61	-1173	8587	50.23	48.14	0.25
268	SLU 72	61	-1118	8520	48.38	48.16	0.25
268	SLU 73	63	-1143	8840	49.49	50.49	0.26
268	SLU 74	65	-1268	9157	54.01	51.8	0.27
268	SLU 75	65	-1212	9090	52.16	51.82	0.27
268	SLU 76	65	-1165	8994	50.54	51.49	0.26
268	SLU 77	67	-1290	9311	55.06	52.8	0.27
268	SLU 78	67	-1234	9244	53.21	52.81	0.27
268	SLU 79	66	-1280	9259	54.68	52.46	0.27
268	SLU 80	66	-1225	9192	52.82	52.47	0.27
268	SLU 81	66	-1282	9239	54.49	52.32	0.27
268	SLU 82	66	-1226	9172	52.63	52.33	0.27
268	SLU 83	67	-1304	9393	55.54	53.31	0.27
268	SLU 84	67	-1248	9326	53.68	53.33	0.27
268	SLE RA 1	44	-845	6220	36.02	34.54	0.18
268	SLE RA 2	44	-782	6145	33.96	34.56	0.18
268	SLE RA 3	45	-866	6357	36.98	35.43	0.18
268	SLE RA 4	45	-829	6312	35.74	35.44	0.18
268	SLE RA 5	44	-797	6248	34.66	35.22	0.18
268	SLE RA 6	46	-881	6459	37.68	36.09	0.19
268	SLE RA 7	46	-843	6414	36.44	36.1	0.19
268	SLE RA 8	45	-874	6425	37.42	35.87	0.18
268	SLE RA 9	45	-837	6380	36.18	35.88	0.18
268	SLE RA 10	47	-854	6593	36.93	37.43	0.19
268	SLE RA 11	48	-937	6804	39.94	38.31	0.2
268	SLE RA 12	48	-900	6760	38.71	38.32	0.2
268	SLE RA 13	48	-869	6696	37.63	38.1	0.2
268	SLE RA 14	49	-952	6907	40.64	38.97	0.2
268	SLE RA 15	49	-915	6862	39.4	38.98	0.2
268	SLE RA 16	49	-946	6873	40.39	38.74	0.2
268	SLE RA 17	49	-908	6828	39.15	38.75	0.2
268	SLE RA 18	49	-946	6859	40.26	38.65	0.2
268	SLE RA 19	49	-909	6815	39.02	38.66	0.2
268	SLE RA 20	50	-961	6962	40.96	39.31	0.2
268	SLE RA 21	50	-924	6917	39.72	39.32	0.2
268	SLE FR 1	44	-845	6220	36.02	34.54	0.18
268	SLE FR 2	44	-832	6205	35.61	34.55	0.18
268	SLE FR 3	44	-850	6261	36.3	34.81	0.18
268	SLE FR 4	45	-863	6397	36.88	35.78	0.18
268	SLE FR 5	46	-881	6453	37.57	36.04	0.19
268	SLE FR 6	46	-895	6540	38.14	36.6	0.19
268	SLE QP 1	44	-845	6220	36.02	34.54	0.18
268	SLE QP 2	45	-875	6412	37.3	35.78	0.18
268	SLD 1	85	-847	7744	38.75	67.39	0.35
268	SLD 2	85	-847	7744	38.75	67.39	0.35
268	SLD 3	99	-1205	8191	50.2	78.66	0.4
268	SLD 4	99	-1205	8191	50.2	78.66	0.4
268	SLD 5	37	-323	6133	20.37	28.18	0.15
268	SLD 6	37	-323	6133	20.37	28.18	0.15
268	SLD 7	81	-1517	7624	58.53	65.72	0.33
268	SLD 8	81	-1517	7624	58.53	65.72	0.33
268	SLD 9	9	-233	5199	16.06	5.83	0.04
268	SLD 10	9	-233	5199	16.06	5.83	0.04
268	SLD 11	53	-1427	6690	54.22	43.37	0.21
268	SLD 12	53	-1427	6690	54.22	43.37	0.21
268	SLD 13	-8	-545	4632	24.39	-7.11	-0.03
268	SLD 14	-8	-545	4632	24.39	-7.11	-0.03
268	SLD 15	5	-904	5079	35.84	4.16	0.02
268	SLD 16	5	-904	5079	35.84	4.16	0.02
268	SLV 1	139	-810	9524	40.73	109.66	0.56
268	SLV 2	139	-810	9524	40.73	109.66	0.56
268	SLV 3	171	-1649	10589	67.6	136.81	0.69
268	SLV 4	171	-1649	10589	67.6	136.81	0.69
268	SLV 5	25	416	5729	-2.42	16.77	0.11
268	SLV 6	25	416	5729	-2.42	16.77	0.11
268	SLV 7	131	-2379	9281	87.14	107.25	0.52
268	SLV 8	131	-2379	9281	87.14	107.25	0.52
268	SLV 9	-40	629	3542	-12.55	-35.7	-0.16
268	SLV 10	-40	629	3542	-12.55	-35.7	-0.16
268	SLV 11	65	-2166	7094	77.01	54.78	0.26
268	SLV 12	65	-2166	7094	77.01	54.78	0.26
268	SLV 13	-80	-102	2234	6.99	-65.26	-0.32
268	SLV 14	-80	-102	2234	6.99	-65.26	-0.32
268	SLV 15	-49	-940	3299	33.86	-38.11	-0.19
268	SLV 16	-49	-940	3299	33.86	-38.11	-0.19
269	SLU 1	6	-636	5935	33.59	3.98	-0.01

Nodo	Cont.	Reazione a traslazione			Reazione a rotazione		
Ind.	N.br.	x	y	z	x	y	z
269	SLU 2	5	-548	5812	29.2	3.21	-0.01
269	SLU 3	6	-655	6146	34.63	4.11	-0.01
269	SLU 4	6	-601	6073	32	3.64	-0.01
269	SLU 5	6	-556	5970	29.76	3.3	-0.01
269	SLU 6	6	-663	6303	35.19	4.2	-0.01
269	SLU 7	6	-610	6230	32.56	3.74	-0.01
269	SLU 8	6	-653	6249	34.71	4.17	-0.01
269	SLU 9	6	-600	6176	32.07	3.7	-0.01
269	SLU 10	6	-641	6508	34.13	3.6	-0.01
269	SLU 11	7	-748	6842	39.56	4.5	-0.01
269	SLU 12	7	-695	6768	36.92	4.04	-0.01
269	SLU 13	6	-650	6665	34.68	3.7	-0.01
269	SLU 14	7	-757	6999	40.12	4.6	-0.01
269	SLU 15	7	-703	6925	37.48	4.13	-0.01
269	SLU 16	7	-747	6945	39.63	4.56	-0.01
269	SLU 17	7	-694	6872	37	4.1	-0.01
269	SLU 18	7	-770	6928	40.63	4.55	-0.01
269	SLU 19	7	-717	6855	37.99	4.08	-0.01
269	SLU 20	7	-779	7086	41.19	4.64	-0.01
269	SLU 21	7	-726	7012	38.55	4.18	-0.01
269	SLU 22	7	-727	6627	38.36	4.39	-0.01
269	SLU 23	6	-638	6505	33.97	3.61	-0.01
269	SLU 24	7	-745	6839	39.4	4.52	-0.01
269	SLU 25	7	-691	6765	36.77	4.05	-0.01
269	SLU 26	6	-646	6662	34.53	3.71	-0.01
269	SLU 27	7	-753	6996	39.96	4.61	-0.01
269	SLU 28	7	-700	6923	37.32	4.14	-0.01
269	SLU 29	7	-744	6942	39.48	4.57	-0.01
269	SLU 30	7	-690	6869	36.84	4.11	-0.01
269	SLU 31	7	-731	7201	38.9	4.01	-0.01
269	SLU 32	8	-838	7534	44.33	4.91	-0.01
269	SLU 33	7	-785	7461	41.69	4.45	-0.01
269	SLU 34	7	-740	7358	39.45	4.1	-0.01
269	SLU 35	8	-847	7692	44.88	5.01	-0.01
269	SLU 36	7	-794	7618	42.25	4.54	-0.01
269	SLU 37	8	-837	7638	44.4	4.97	-0.01
269	SLU 38	7	-784	7564	41.77	4.51	-0.01
269	SLU 39	8	-861	7621	45.4	4.95	-0.01
269	SLU 40	7	-807	7548	42.76	4.49	-0.01
269	SLU 41	8	-869	7778	45.96	5.05	-0.01
269	SLU 42	7	-816	7705	43.32	4.58	-0.01
269	SLU 43	7	-797	7478	42.04	5.03	-0.01
269	SLU 44	7	-708	7355	37.64	4.26	-0.01
269	SLU 45	8	-815	7689	43.08	5.16	-0.01
269	SLU 46	7	-761	7616	40.44	4.7	-0.01
269	SLU 47	7	-716	7513	38.2	4.35	-0.01
269	SLU 48	8	-823	7846	43.63	5.26	-0.01
269	SLU 49	8	-770	7773	41	4.79	-0.01
269	SLU 50	8	-814	7792	43.15	5.22	-0.01
269	SLU 51	7	-760	7719	40.52	4.76	-0.01
269	SLU 52	8	-801	8051	42.57	4.66	-0.01
269	SLU 53	8	-908	8384	48	5.56	-0.02
269	SLU 54	8	-855	8311	45.37	5.1	-0.01
269	SLU 55	8	-810	8208	43.13	4.75	-0.01
269	SLU 56	9	-917	8542	48.56	5.65	-0.02
269	SLU 57	8	-863	8468	45.92	5.19	-0.01
269	SLU 58	8	-907	8488	48.08	5.62	-0.02
269	SLU 59	8	-854	8415	45.44	5.15	-0.01
269	SLU 60	8	-930	8471	49.07	5.6	-0.02
269	SLU 61	8	-877	8398	46.44	5.14	-0.01
269	SLU 62	9	-939	8629	49.63	5.7	-0.02
269	SLU 63	8	-886	8555	46.99	5.23	-0.02
269	SLU 64	8	-887	8170	46.8	5.44	-0.01
269	SLU 65	8	-798	8048	42.41	4.67	-0.01
269	SLU 66	8	-905	8382	47.84	5.57	-0.02
269	SLU 67	8	-851	8308	45.21	5.11	-0.01
269	SLU 68	8	-806	8205	42.97	4.76	-0.01
269	SLU 69	9	-913	8539	48.4	5.66	-0.02
269	SLU 70	8	-860	8466	45.77	5.2	-0.01
269	SLU 71	8	-904	8485	47.92	5.63	-0.02
269	SLU 72	8	-850	8412	45.28	5.17	-0.01
269	SLU 73	8	-891	8743	47.34	5.07	-0.02
269	SLU 74	9	-998	9077	52.77	5.97	-0.02
269	SLU 75	9	-945	9004	50.13	5.5	-0.02
269	SLU 76	9	-900	8901	47.9	5.16	-0.02
269	SLU 77	9	-1007	9234	53.33	6.06	-0.02
269	SLU 78	9	-954	9161	50.69	5.6	-0.02
269	SLU 79	9	-997	9181	52.84	6.03	-0.02
269	SLU 80	9	-944	9107	50.21	5.56	-0.02
269	SLU 81	9	-1021	9164	53.84	6.01	-0.02
269	SLU 82	9	-967	9090	51.21	5.54	-0.02
269	SLU 83	9	-1029	9321	54.4	6.1	-0.02
269	SLU 84	9	-976	9248	51.76	5.64	-0.02
269	SLE RA 1	6	-662	6133	34.96	4.1	-0.01
269	SLE RA 2	6	-603	6051	32.03	3.58	-0.01
269	SLE RA 3	6	-674	6274	35.65	4.18	-0.01
269	SLE RA 4	6	-639	6225	33.89	3.87	-0.01
269	SLE RA 5	6	-609	6156	32.4	3.64	-0.01
269	SLE RA 6	6	-680	6378	36.02	4.24	-0.01
269	SLE RA 7	6	-644	6329	34.26	3.93	-0.01

Nodo	Cont.	Reazione a traslazione			Reazione a rotazione		
Ind.	N.br.	x	y	z	x	y	z
269	SLE RA 8	6	-674	6342	35.7	4.22	-0.01
269	SLE RA 9	6	-638	6294	33.94	3.91	-0.01
269	SLE RA 10	6	-665	6515	35.31	3.85	-0.01
269	SLE RA 11	7	-737	6737	38.93	4.45	-0.01
269	SLE RA 12	7	-701	6688	37.18	4.14	-0.01
269	SLE RA 13	6	-671	6620	35.68	3.91	-0.01
269	SLE RA 14	7	-742	6842	39.3	4.51	-0.01
269	SLE RA 15	7	-707	6793	37.55	4.2	-0.01
269	SLE RA 16	7	-736	6806	38.98	4.49	-0.01
269	SLE RA 17	7	-700	6757	37.23	4.18	-0.01
269	SLE RA 18	7	-752	6795	39.65	4.47	-0.01
269	SLE RA 19	7	-716	6746	37.89	4.16	-0.01
269	SLE RA 20	7	-757	6900	40.02	4.54	-0.01
269	SLE RA 21	7	-722	6851	38.26	4.23	-0.01
269	SLE FR 1	6	-662	6133	34.96	4.1	-0.01
269	SLE FR 2	6	-650	6116	34.37	3.99	-0.01
269	SLE FR 3	6	-665	6175	35.1	4.12	-0.01
269	SLE FR 4	6	-677	6315	35.78	4.11	-0.01
269	SLE FR 5	6	-691	6373	36.51	4.23	-0.01
269	SLE FR 6	6	-707	6464	37.3	4.29	-0.01
269	SLE QP 1	6	-662	6133	34.96	4.1	-0.01
269	SLE QP 2	6	-689	6331	36.36	4.21	-0.01
269	SLD 1	26	-366	4435	19.54	22.65	-0.04
269	SLD 2	26	-366	4435	19.54	22.65	-0.04
269	SLD 3	33	-742	4949	37.85	29.08	-0.05
269	SLD 4	33	-742	4949	37.85	29.08	-0.05
269	SLD 5	1	-22	4983	3.55	-0.01	0
269	SLD 6	1	-22	4983	3.55	-0.01	0
269	SLD 7	25	-1275	6696	64.57	21.43	-0.05
269	SLD 8	25	-1275	6696	64.57	21.43	-0.05
269	SLD 9	-13	-103	5966	8.15	-13.01	0.02
269	SLD 10	-13	-103	5966	8.15	-13.01	0.02
269	SLD 11	11	-1356	7680	69.17	8.43	-0.02
269	SLD 12	11	-1356	7680	69.17	8.43	-0.02
269	SLD 13	-20	-636	7714	34.87	-20.66	0.03
269	SLD 14	-20	-636	7714	34.87	-20.66	0.03
269	SLD 15	-13	-1012	8228	53.18	-14.23	0.02
269	SLD 16	-13	-1012	8228	53.18	-14.23	0.02
269	SLV 1	53	69	1884	-3.09	48.32	-0.08
269	SLV 2	53	69	1884	-3.09	48.32	-0.08
269	SLV 3	71	-811	3102	39.82	64.36	-0.11
269	SLV 4	71	-811	3102	39.82	64.36	-0.11
269	SLV 5	-7	874	3150	-40.54	-6.88	0.02
269	SLV 6	-7	874	3150	-40.54	-6.88	0.02
269	SLV 7	53	-2062	7210	102.47	46.58	-0.1
269	SLV 8	53	-2062	7210	102.47	46.58	-0.1
269	SLV 9	-40	684	5453	-29.74	-38.16	0.07
269	SLV 10	-40	684	5453	-29.74	-38.16	0.07
269	SLV 11	20	-2252	9512	113.26	15.3	-0.05
269	SLV 12	20	-2252	9512	113.26	15.3	-0.05
269	SLV 13	-58	-567	9561	32.91	-55.94	0.09
269	SLV 14	-58	-567	9561	32.91	-55.94	0.09
269	SLV 15	-40	-1448	10778	75.81	-39.9	0.06
269	SLV 16	-40	-1448	10778	75.81	-39.9	0.06
270	SLU 1	3	-303	3158	25.17	3.92	-0.01
270	SLU 2	3	-301	3153	25.11	3.91	-0.01
270	SLU 3	3	-315	3255	26.18	4.06	-0.01
270	SLU 4	3	-314	3252	26.15	4.06	-0.01
270	SLU 5	3	-309	3214	25.77	4.01	-0.01
270	SLU 6	4	-323	3316	26.84	4.16	-0.01
270	SLU 7	4	-322	3313	26.8	4.16	-0.01
270	SLU 8	4	-318	3279	26.48	4.11	-0.01
270	SLU 9	4	-317	3277	26.44	4.1	-0.01
270	SLU 10	4	-361	3616	29.37	4.58	-0.01
270	SLU 11	4	-375	3718	30.44	4.73	-0.01
270	SLU 12	4	-374	3715	30.41	4.73	-0.01
270	SLU 13	4	-369	3677	30.03	4.68	-0.01
270	SLU 14	4	-383	3779	31.1	4.83	-0.01
270	SLU 15	4	-382	3776	31.07	4.82	-0.01
270	SLU 16	4	-378	3742	30.74	4.78	-0.01
270	SLU 17	4	-377	3740	30.71	4.77	-0.01
270	SLU 18	4	-388	3819	31.26	4.87	-0.01
270	SLU 19	4	-387	3816	31.22	4.87	-0.01
270	SLU 20	4	-396	3880	31.91	4.97	-0.01
270	SLU 21	4	-395	3877	31.88	4.97	-0.01
270	SLU 22	4	-359	3597	29.29	4.56	-0.01
270	SLU 23	4	-357	3593	29.23	4.55	-0.01
270	SLU 24	4	-371	3694	30.31	4.7	-0.01
270	SLU 25	4	-371	3692	30.27	4.7	-0.01
270	SLU 26	4	-365	3654	29.89	4.65	-0.01
270	SLU 27	4	-379	3755	30.96	4.8	-0.01
270	SLU 28	4	-378	3753	30.93	4.79	-0.01
270	SLU 29	4	-374	3719	30.6	4.74	-0.01
270	SLU 30	4	-374	3716	30.57	4.74	-0.01
270	SLU 31	4	-417	4056	33.5	5.22	-0.01
270	SLU 32	5	-431	4157	34.57	5.37	-0.01
270	SLU 33	5	-431	4155	34.53	5.37	-0.01
270	SLU 34	5	-425	4117	34.15	5.31	-0.01
270	SLU 35	5	-439	4218	35.22	5.47	-0.01
270	SLU 36	5	-438	4216	35.19	5.46	-0.01

Nodo	Cont.	Reazione a traslazione			Reazione a rotazione		
Ind.	N.br.	x	y	z	x	y	z
270	SLU 37	5	-434	4182	34.86	5.41	-0.01
270	SLU 38	5	-434	4179	34.83	5.41	-0.01
270	SLU 39	5	-445	4258	35.38	5.51	-0.01
270	SLU 40	5	-444	4256	35.35	5.51	-0.01
270	SLU 41	5	-452	4319	36.04	5.61	-0.01
270	SLU 42	5	-451	4317	36	5.6	-0.01
270	SLU 43	4	-374	3954	31.3	4.87	-0.01
270	SLU 44	4	-373	3950	31.25	4.87	-0.01
270	SLU 45	4	-387	4051	32.32	5.02	-0.01
270	SLU 46	4	-386	4049	32.28	5.02	-0.01
270	SLU 47	4	-381	4011	31.9	4.96	-0.01
270	SLU 48	4	-395	4112	32.97	5.11	-0.01
270	SLU 49	4	-394	4110	32.94	5.11	-0.01
270	SLU 50	4	-390	4076	32.61	5.06	-0.01
270	SLU 51	4	-389	4074	32.58	5.06	-0.01
270	SLU 52	5	-433	4413	35.51	5.54	-0.01
270	SLU 53	5	-447	4514	36.58	5.69	-0.01
270	SLU 54	5	-446	4512	36.55	5.69	-0.01
270	SLU 55	5	-440	4474	36.16	5.63	-0.01
270	SLU 56	5	-455	4575	37.24	5.78	-0.01
270	SLU 57	5	-454	4573	37.2	5.78	-0.01
270	SLU 58	5	-450	4539	36.88	5.73	-0.01
270	SLU 59	5	-449	4536	36.84	5.73	-0.01
270	SLU 60	5	-460	4615	37.39	5.83	-0.01
270	SLU 61	5	-459	4613	37.36	5.83	-0.01
270	SLU 62	5	-468	4676	38.05	5.92	-0.01
270	SLU 63	5	-467	4674	38.01	5.92	-0.01
270	SLU 64	5	-430	4394	35.43	5.51	-0.01
270	SLU 65	5	-429	4389	35.37	5.51	-0.01
270	SLU 66	5	-443	4491	36.44	5.66	-0.01
270	SLU 67	5	-442	4488	36.41	5.66	-0.01
270	SLU 68	5	-437	4450	36.03	5.6	-0.01
270	SLU 69	5	-451	4552	37.1	5.75	-0.01
270	SLU 70	5	-450	4549	37.06	5.75	-0.01
270	SLU 71	5	-446	4515	36.74	5.7	-0.01
270	SLU 72	5	-445	4513	36.7	5.7	-0.01
270	SLU 73	5	-489	4852	39.63	6.18	-0.01
270	SLU 74	5	-503	4954	40.71	6.33	-0.01
270	SLU 75	5	-502	4951	40.67	6.32	-0.01
270	SLU 76	5	-497	4913	40.29	6.27	-0.01
270	SLU 77	5	-511	5015	41.36	6.42	-0.01
270	SLU 78	5	-510	5012	41.33	6.42	-0.01
270	SLU 79	5	-506	4978	41	6.37	-0.01
270	SLU 80	5	-505	4976	40.97	6.37	-0.01
270	SLU 81	6	-516	5055	41.52	6.47	-0.01
270	SLU 82	6	-515	5052	41.48	6.47	-0.01
270	SLU 83	6	-524	5116	42.17	6.56	-0.01
270	SLU 84	6	-523	5113	42.14	6.56	-0.01
270	SLE RA 1	4	-319	3283	26.35	4.1	-0.01
270	SLE RA 2	4	-318	3280	26.31	4.1	-0.01
270	SLE RA 3	4	-327	3348	27.02	4.2	-0.01
270	SLE RA 4	4	-327	3346	27	4.2	-0.01
270	SLE RA 5	4	-323	3321	26.74	4.16	-0.01
270	SLE RA 6	4	-332	3389	27.46	4.26	-0.01
270	SLE RA 7	4	-332	3387	27.44	4.26	-0.01
270	SLE RA 8	4	-329	3364	27.22	4.23	-0.01
270	SLE RA 9	4	-329	3363	27.2	4.22	-0.01
270	SLE RA 10	4	-358	3589	29.15	4.54	-0.01
270	SLE RA 11	4	-367	3657	29.86	4.64	-0.01
270	SLE RA 12	4	-367	3655	29.84	4.64	-0.01
270	SLE RA 13	4	-363	3629	29.59	4.61	-0.01
270	SLE RA 14	4	-372	3697	30.3	4.71	-0.01
270	SLE RA 15	4	-372	3696	30.28	4.7	-0.01
270	SLE RA 16	4	-369	3673	30.06	4.67	-0.01
270	SLE RA 17	4	-369	3671	30.04	4.67	-0.01
270	SLE RA 18	4	-376	3724	30.41	4.74	-0.01
270	SLE RA 19	4	-375	3722	30.38	4.74	-0.01
270	SLE RA 20	4	-381	3764	30.84	4.8	-0.01
270	SLE RA 21	4	-380	3763	30.82	4.8	-0.01
270	SLE FR 1	4	-319	3283	26.35	4.1	-0.01
270	SLE FR 2	4	-319	3283	26.34	4.1	-0.01
270	SLE FR 3	4	-321	3299	26.52	4.13	-0.01
270	SLE FR 4	4	-336	3415	27.56	4.29	-0.01
270	SLE FR 5	4	-338	3432	27.74	4.32	-0.01
270	SLE FR 6	4	-347	3503	28.38	4.42	-0.01
270	SLE QP 1	4	-319	3283	26.35	4.1	-0.01
270	SLE QP 2	4	-336	3415	27.56	4.29	-0.01
270	SLD 1	6	-267	3908	23.88	6.35	-0.02
270	SLD 2	6	-267	3908	23.88	6.35	-0.02
270	SLD 3	11	-652	3654	44.75	8.79	-0.01
270	SLD 4	11	-652	3654	44.75	8.79	-0.01
270	SLD 5	-3	269	3950	-5.19	1.21	-0.02
270	SLD 6	-3	269	3950	-5.19	1.21	-0.02
270	SLD 7	13	-1015	3100	64.37	9.34	0
270	SLD 8	13	-1015	3100	64.37	9.34	0
270	SLD 9	-6	343	3730	-9.25	-0.75	-0.01
270	SLD 10	-6	343	3730	-9.25	-0.75	-0.01
270	SLD 11	10	-941	2881	60.32	7.37	0
270	SLD 12	10	-941	2881	60.32	7.37	0
270	SLD 13	-4	-19	3177	10.37	-0.21	0

Nodo	Cont.	Reazione a traslazione			Reazione a rotazione		
Ind.	N.br.	x	y	z	x	y	z
270	SLD 14	-4	-19	3177	10.37	-0.21	0
270	SLD 15	1	-405	2922	31.24	2.23	0.01
270	SLD 16	1	-405	2922	31.24	2.23	0.01
270	SLV 1	10	-165	4579	18.36	8.99	-0.03
270	SLV 2	10	-165	4579	18.36	8.99	-0.03
270	SLV 3	21	-1092	3964	68.67	14.96	-0.02
270	SLV 4	21	-1092	3964	68.67	14.96	-0.02
270	SLV 5	-12	1122	4699	-51.5	-3.35	-0.03
270	SLV 6	-12	1122	4699	-51.5	-3.35	-0.03
270	SLV 7	26	-1969	2646	116.2	16.55	0
270	SLV 8	26	-1969	2646	116.2	16.55	0
270	SLV 9	-19	1298	4185	-61.08	-7.96	-0.02
270	SLV 10	-19	1298	4185	-61.08	-7.96	-0.02
270	SLV 11	19	-1794	2132	106.63	11.94	0.02
270	SLV 12	19	-1794	2132	106.63	11.94	0.02
270	SLV 13	-14	420	2867	-13.54	-6.37	0.01
270	SLV 14	-14	420	2867	-13.54	-6.37	0.01
270	SLV 15	-2	-507	2251	36.77	-0.4	0.02
270	SLV 16	-2	-507	2251	36.77	-0.4	0.02
271	SLU 1	22	-264	2878	2.53	20.62	-0.02
271	SLU 2	21	-265	2867	2.75	20.41	-0.02
271	SLU 3	22	-275	2968	2.62	21.48	-0.03
271	SLU 4	22	-276	2962	2.75	21.35	-0.03
271	SLU 5	22	-274	2929	2.84	21	-0.02
271	SLU 6	23	-283	3031	2.71	22.07	-0.03
271	SLU 7	23	-284	3024	2.84	21.94	-0.03
271	SLU 8	23	-280	3003	2.71	21.8	-0.03
271	SLU 9	23	-281	2996	2.84	21.68	-0.03
271	SLU 10	25	-305	3224	3.04	23.76	-0.03
271	SLU 11	26	-315	3326	2.91	24.83	-0.03
271	SLU 12	26	-316	3319	3.04	24.7	-0.03
271	SLU 13	25	-314	3287	3.13	24.35	-0.03
271	SLU 14	26	-323	3388	3	25.42	-0.03
271	SLU 15	26	-324	3382	3.13	25.29	-0.03
271	SLU 16	26	-320	3360	3	25.15	-0.03
271	SLU 17	26	-321	3354	3.13	25.03	-0.03
271	SLU 18	26	-321	3389	2.94	25.41	-0.03
271	SLU 19	26	-322	3382	3.08	25.28	-0.03
271	SLU 20	27	-329	3451	3.03	26	-0.03
271	SLU 21	27	-330	3445	3.17	25.87	-0.03
271	SLU 22	25	-303	3231	2.78	23.93	-0.03
271	SLU 23	25	-305	3220	3.01	23.73	-0.03
271	SLU 24	26	-314	3321	2.88	24.79	-0.03
271	SLU 25	26	-315	3315	3.01	24.67	-0.03
271	SLU 26	25	-313	3282	3.1	24.32	-0.03
271	SLU 27	26	-323	3384	2.97	25.38	-0.03
271	SLU 28	26	-324	3377	3.1	25.26	-0.03
271	SLU 29	26	-320	3356	2.97	25.12	-0.03
271	SLU 30	26	-321	3349	3.1	24.99	-0.03
271	SLU 31	28	-345	3577	3.3	27.08	-0.03
271	SLU 32	29	-354	3679	3.17	28.14	-0.03
271	SLU 33	29	-355	3672	3.3	28.02	-0.03
271	SLU 34	29	-353	3640	3.39	27.67	-0.03
271	SLU 35	30	-363	3742	3.26	28.74	-0.03
271	SLU 36	30	-364	3735	3.39	28.61	-0.03
271	SLU 37	30	-360	3714	3.26	28.47	-0.03
271	SLU 38	30	-361	3707	3.39	28.34	-0.03
271	SLU 39	30	-360	3742	3.2	28.72	-0.03
271	SLU 40	30	-361	3735	3.34	28.6	-0.03
271	SLU 41	31	-369	3804	3.29	29.31	-0.03
271	SLU 42	30	-370	3798	3.43	29.19	-0.03
271	SLU 43	27	-329	3620	3.19	25.67	-0.03
271	SLU 44	27	-331	3609	3.42	25.46	-0.03
271	SLU 45	28	-341	3711	3.29	26.52	-0.03
271	SLU 46	28	-341	3704	3.42	26.4	-0.03
271	SLU 47	27	-339	3672	3.51	26.05	-0.03
271	SLU 48	28	-349	3773	3.38	27.12	-0.03
271	SLU 49	28	-350	3767	3.51	26.99	-0.03
271	SLU 50	28	-346	3745	3.38	26.85	-0.03
271	SLU 51	28	-347	3739	3.51	26.73	-0.03
271	SLU 52	30	-371	3967	3.71	28.81	-0.03
271	SLU 53	31	-381	4068	3.58	29.88	-0.04
271	SLU 54	31	-382	4062	3.71	29.75	-0.04
271	SLU 55	31	-379	4029	3.8	29.4	-0.03
271	SLU 56	32	-389	4131	3.67	30.47	-0.04
271	SLU 57	32	-390	4124	3.8	30.34	-0.04
271	SLU 58	31	-386	4103	3.67	30.2	-0.04
271	SLU 59	31	-387	4096	3.8	30.08	-0.04
271	SLU 60	32	-387	4131	3.61	30.45	-0.04
271	SLU 61	32	-388	4124	3.75	30.33	-0.04
271	SLU 62	32	-395	4193	3.7	31.05	-0.04
271	SLU 63	32	-396	4187	3.84	30.92	-0.04
271	SLU 64	30	-369	3973	3.45	28.98	-0.03
271	SLU 65	30	-370	3962	3.68	28.77	-0.03
271	SLU 66	31	-380	4064	3.54	29.84	-0.04
271	SLU 67	31	-381	4057	3.68	29.72	-0.04
271	SLU 68	31	-379	4025	3.77	29.37	-0.03
271	SLU 69	32	-388	4126	3.64	30.43	-0.04
271	SLU 70	32	-389	4120	3.77	30.31	-0.04
271	SLU 71	31	-385	4098	3.64	30.17	-0.04

Nodo	Cont.	Reazione a traslazione			Reazione a rotazione		
Ind.	N.br.	x	y	z	x	y	z
271	SLU 72	31	-386	4092	3.77	30.04	-0.04
271	SLU 73	33	-410	4320	3.97	32.13	-0.04
271	SLU 74	35	-420	4421	3.83	33.19	-0.04
271	SLU 75	34	-421	4415	3.97	33.07	-0.04
271	SLU 76	34	-419	4382	4.06	32.72	-0.04
271	SLU 77	35	-428	4484	3.93	33.78	-0.04
271	SLU 78	35	-429	4477	4.06	33.66	-0.04
271	SLU 79	35	-426	4456	3.93	33.52	-0.04
271	SLU 80	35	-426	4449	4.06	33.39	-0.04
271	SLU 81	35	-426	4484	3.87	33.77	-0.04
271	SLU 82	35	-427	4477	4	33.65	-0.04
271	SLU 83	36	-434	4546	3.96	34.36	-0.04
271	SLU 84	36	-435	4540	4.1	34.24	-0.04
271	SLE RA 1	23	-275	2979	2.6	21.57	-0.03
271	SLE RA 2	22	-276	2971	2.75	21.43	-0.03
271	SLE RA 3	23	-282	3039	2.66	22.14	-0.03
271	SLE RA 4	23	-283	3035	2.75	22.05	-0.03
271	SLE RA 5	23	-282	3013	2.81	21.82	-0.03
271	SLE RA 6	24	-288	3081	2.72	22.53	-0.03
271	SLE RA 7	23	-289	3076	2.81	22.45	-0.03
271	SLE RA 8	23	-286	3062	2.72	22.35	-0.03
271	SLE RA 9	23	-287	3058	2.81	22.27	-0.03
271	SLE RA 10	25	-303	3210	2.94	23.66	-0.03
271	SLE RA 11	25	-309	3277	2.85	24.37	-0.03
271	SLE RA 12	25	-310	3273	2.94	24.29	-0.03
271	SLE RA 13	25	-308	3251	3.01	24.06	-0.03
271	SLE RA 14	26	-315	3319	2.91	24.77	-0.03
271	SLE RA 15	26	-315	3315	3.01	24.68	-0.03
271	SLE RA 16	26	-313	3300	2.91	24.59	-0.03
271	SLE RA 17	26	-313	3296	3.01	24.51	-0.03
271	SLE RA 18	26	-313	3319	2.88	24.76	-0.03
271	SLE RA 19	26	-314	3315	2.97	24.67	-0.03
271	SLE RA 20	26	-319	3361	2.94	25.15	-0.03
271	SLE RA 21	26	-319	3357	3.03	25.07	-0.03
271	SLE FR 1	23	-275	2979	2.6	21.57	-0.03
271	SLE FR 2	22	-275	2977	2.63	21.54	-0.03
271	SLE FR 3	23	-277	2995	2.62	21.72	-0.03
271	SLE FR 4	23	-287	3079	2.71	22.5	-0.03
271	SLE FR 5	24	-289	3097	2.71	22.68	-0.03
271	SLE FR 6	24	-294	3149	2.74	23.16	-0.03
271	SLE QP 1	23	-275	2979	2.6	21.57	-0.03
271	SLE QP 2	24	-286	3081	2.68	22.52	-0.03
271	SLD 1	37	-302	3304	1.9	32.02	-0.04
271	SLD 2	37	-302	3304	1.9	32.02	-0.04
271	SLD 3	34	-746	3697	25.1	34.87	-0.04
271	SLD 4	34	-746	3697	25.1	34.87	-0.04
271	SLD 5	32	383	2552	-32.74	21.04	-0.04
271	SLD 6	32	383	2552	-32.74	21.04	-0.04
271	SLD 7	22	-1098	3861	44.6	30.56	-0.02
271	SLD 8	22	-1098	3861	44.6	30.56	-0.02
271	SLD 9	25	525	2300	-39.23	14.49	-0.03
271	SLD 10	25	525	2300	-39.23	14.49	-0.03
271	SLD 11	15	-955	3610	38.11	24	-0.02
271	SLD 12	15	-955	3610	38.11	24	-0.02
271	SLD 13	13	173	2465	-19.73	10.17	-0.02
271	SLD 14	13	173	2465	-19.73	10.17	-0.02
271	SLD 15	10	-271	2858	3.47	13.03	-0.01
271	SLD 16	10	-271	2858	3.47	13.03	-0.01
271	SLV 1	55	-316	3598	0.52	44.74	-0.06
271	SLV 2	55	-316	3598	0.52	44.74	-0.06
271	SLV 3	48	-1380	4531	56.1	51.73	-0.05
271	SLV 4	48	-1380	4531	56.1	51.73	-0.05
271	SLV 5	44	1318	1822	-82.27	18.59	-0.05
271	SLV 6	44	1318	1822	-82.27	18.59	-0.05
271	SLV 7	20	-2228	4930	103.01	41.88	-0.02
271	SLV 8	20	-2228	4930	103.01	41.88	-0.02
271	SLV 9	27	1655	1232	-97.65	3.16	-0.03
271	SLV 10	27	1655	1232	-97.65	3.16	-0.03
271	SLV 11	3	-1891	4340	87.64	26.46	-0.01
271	SLV 12	3	-1891	4340	87.64	26.46	-0.01
271	SLV 13	-1	807	1631	-50.74	-6.68	0
271	SLV 14	-1	807	1631	-50.74	-6.68	0
271	SLV 15	-8	-257	2563	4.85	0.3	0
271	SLV 16	-8	-257	2563	4.85	0.3	0
272	SLU 1	1	-76	4284	2.29	0.59	0
272	SLU 2	1	-74	4280	2.2	0.59	0
272	SLU 3	1	-81	4428	2.44	0.61	0
272	SLU 4	1	-80	4425	2.39	0.61	0
272	SLU 5	1	-77	4373	2.3	0.6	0
272	SLU 6	1	-84	4521	2.54	0.62	0
272	SLU 7	1	-83	4519	2.49	0.62	0
272	SLU 8	1	-82	4471	2.47	0.61	0
272	SLU 9	1	-81	4469	2.42	0.61	0
272	SLU 10	1	-103	4924	3.21	0.66	0
272	SLU 11	1	-110	5071	3.45	0.68	0
272	SLU 12	1	-109	5069	3.4	0.68	0
272	SLU 13	1	-106	5017	3.3	0.67	0
272	SLU 14	1	-113	5165	3.54	0.69	0
272	SLU 15	1	-112	5163	3.49	0.69	0
272	SLU 16	1	-111	5115	3.48	0.68	0

Nodo	Cont.	Reazione a traslazione			Reazione a rotazione		
Ind.	N.br.	x	y	z	x	y	z
272	SLU 17	1	-110	5112	3.43	0.68	0
272	SLU 18	1	-117	5204	3.72	0.69	0
272	SLU 19	1	-116	5201	3.67	0.69	0
272	SLU 20	1	-120	5297	3.81	0.7	0
272	SLU 21	1	-119	5295	3.76	0.7	0
272	SLU 22	1	-100	4898	3.12	0.66	0
272	SLU 23	1	-98	4894	3.04	0.67	0
272	SLU 24	1	-105	5042	3.28	0.68	0
272	SLU 25	1	-104	5040	3.23	0.68	0
272	SLU 26	1	-102	4988	3.13	0.68	0
272	SLU 27	1	-108	5136	3.37	0.69	0
272	SLU 28	1	-107	5133	3.32	0.7	0
272	SLU 29	1	-107	5086	3.31	0.69	0
272	SLU 30	1	-105	5083	3.26	0.69	0
272	SLU 31	1	-127	5538	4.04	0.73	0
272	SLU 32	1	-134	5686	4.28	0.75	0
272	SLU 33	1	-133	5684	4.23	0.75	0
272	SLU 34	1	-130	5632	4.13	0.74	0
272	SLU 35	1	-137	5780	4.38	0.76	0
272	SLU 36	1	-136	5777	4.33	0.76	0
272	SLU 37	1	-135	5729	4.31	0.75	0
272	SLU 38	1	-134	5727	4.26	0.75	0
272	SLU 39	1	-141	5818	4.56	0.76	0
272	SLU 40	1	-140	5816	4.51	0.76	0
272	SLU 41	1	-144	5912	4.65	0.77	0
272	SLU 42	1	-143	5909	4.6	0.77	0
272	SLU 43	1	-91	5358	2.69	0.74	0
272	SLU 44	1	-89	5354	2.6	0.74	0
272	SLU 45	1	-96	5502	2.84	0.76	0
272	SLU 46	1	-95	5500	2.79	0.76	0
272	SLU 47	1	-92	5448	2.69	0.75	0
272	SLU 48	1	-99	5596	2.94	0.77	0
272	SLU 49	1	-98	5593	2.89	0.77	0
272	SLU 50	1	-97	5545	2.87	0.76	0
272	SLU 51	1	-96	5543	2.82	0.76	0
272	SLU 52	1	-117	5998	3.61	0.81	0
272	SLU 53	1	-124	6146	3.85	0.83	0
272	SLU 54	1	-123	6143	3.8	0.83	0
272	SLU 55	1	-121	6092	3.7	0.82	0
272	SLU 56	1	-127	6239	3.94	0.84	0
272	SLU 57	1	-126	6237	3.89	0.84	0
272	SLU 58	1	-126	6189	3.88	0.83	0
272	SLU 59	1	-124	6187	3.83	0.83	0
272	SLU 60	1	-132	6278	4.12	0.84	0
272	SLU 61	1	-130	6276	4.07	0.84	0
272	SLU 62	1	-135	6372	4.21	0.85	0
272	SLU 63	1	-134	6369	4.16	0.85	0
272	SLU 64	1	-115	5973	3.52	0.81	0
272	SLU 65	1	-113	5969	3.44	0.82	0
272	SLU 66	1	-120	6117	3.68	0.83	0
272	SLU 67	1	-119	6114	3.63	0.84	0
272	SLU 68	1	-116	6062	3.53	0.83	0
272	SLU 69	1	-123	6210	3.77	0.85	0
272	SLU 70	1	-122	6208	3.72	0.85	0
272	SLU 71	1	-121	6160	3.7	0.84	0
272	SLU 72	1	-120	6158	3.65	0.84	0
272	SLU 73	1	-142	6613	4.44	0.88	0
272	SLU 74	1	-148	6760	4.68	0.9	0
272	SLU 75	1	-147	6758	4.63	0.9	0
272	SLU 76	1	-145	6706	4.53	0.9	0
272	SLU 77	1	-152	6854	4.78	0.91	0
272	SLU 78	1	-150	6852	4.73	0.92	0
272	SLU 79	1	-150	6804	4.71	0.9	0
272	SLU 80	1	-149	6801	4.66	0.91	0
272	SLU 81	1	-156	6893	4.95	0.91	0
272	SLU 82	1	-155	6890	4.91	0.91	0
272	SLU 83	1	-159	6986	5.05	0.92	0
272	SLU 84	1	-158	6984	5	0.92	0
272	SLE RA 1	1	-83	4459	2.52	0.61	0
272	SLE RA 2	1	-82	4457	2.47	0.61	0
272	SLE RA 3	1	-86	4555	2.63	0.62	0
272	SLE RA 4	1	-86	4554	2.6	0.62	0
272	SLE RA 5	1	-84	4519	2.53	0.62	0
272	SLE RA 6	1	-89	4618	2.69	0.63	0
272	SLE RA 7	1	-88	4616	2.66	0.63	0
272	SLE RA 8	1	-87	4584	2.65	0.62	0
272	SLE RA 9	1	-87	4583	2.61	0.63	0
272	SLE RA 10	1	-101	4886	3.14	0.66	0
272	SLE RA 11	1	-105	4984	3.3	0.67	0
272	SLE RA 12	1	-105	4983	3.27	0.67	0
272	SLE RA 13	1	-103	4948	3.2	0.66	0
272	SLE RA 14	1	-108	5047	3.36	0.68	0
272	SLE RA 15	1	-107	5045	3.33	0.68	0
272	SLE RA 16	1	-106	5013	3.32	0.67	0
272	SLE RA 17	1	-106	5012	3.28	0.67	0
272	SLE RA 18	1	-110	5073	3.48	0.67	0
272	SLE RA 19	1	-110	5071	3.45	0.68	0
272	SLE RA 20	1	-112	5135	3.54	0.68	0
272	SLE RA 21	1	-112	5133	3.51	0.68	0
272	SLE FR 1	1	-83	4459	2.52	0.61	0

Nodo	Cont.	Reazione a traslazione			Reazione a rotazione		
Ind.	N.br.	x	y	z	x	y	z
272	SLE FR 2	1	-83	4459	2.51	0.61	0
272	SLE FR 3	1	-84	4484	2.55	0.61	0
272	SLE FR 4	1	-91	4643	2.8	0.63	0
272	SLE FR 5	1	-92	4668	2.84	0.63	0
272	SLE FR 6	1	-97	4766	3	0.64	0
272	SLE QP 1	1	-83	4459	2.52	0.61	0
272	SLE QP 2	1	-91	4643	2.81	0.63	0
272	SLD 1	7	261	4143	-13.58	4.55	-0.01
272	SLD 2	7	261	4143	-13.58	4.55	-0.01
272	SLD 3	2	-258	4220	11.36	1.69	-0.02
272	SLD 4	2	-258	4220	11.36	1.69	-0.02
272	SLD 5	11	802	4375	-39.93	6.15	0
272	SLD 6	11	802	4375	-39.93	6.15	0
272	SLD 7	-7	-929	4634	43.2	-3.4	-0.01
272	SLD 8	-7	-929	4634	43.2	-3.4	-0.01
272	SLD 9	9	746	4652	-37.58	4.66	0.01
272	SLD 10	9	746	4652	-37.58	4.66	0.01
272	SLD 11	-10	-984	4912	45.55	-4.89	0
272	SLD 12	-10	-984	4912	45.55	-4.89	0
272	SLD 13	0	75	5066	-5.74	-0.43	0.01
272	SLD 14	0	75	5066	-5.74	-0.43	0.01
272	SLD 15	-6	-444	5144	19.2	-3.29	0.01
272	SLD 16	-6	-444	5144	19.2	-3.29	0.01
272	SLV 1	17	754	3471	-36.55	10.14	-0.02
272	SLV 2	17	754	3471	-36.55	10.14	-0.02
272	SLV 3	3	-489	3656	23.18	2.84	-0.04
272	SLV 4	3	-489	3656	23.18	2.84	-0.04
272	SLV 5	27	2048	4011	-99.59	14.56	0.01
272	SLV 6	27	2048	4011	-99.59	14.56	0.01
272	SLV 7	-20	-2096	4628	99.52	-9.78	-0.03
272	SLV 8	-20	-2096	4628	99.52	-9.78	-0.03
272	SLV 9	21	1913	4659	-93.89	11.04	0.03
272	SLV 10	21	1913	4659	-93.89	11.04	0.03
272	SLV 11	-25	-2230	5276	105.21	-13.3	-0.01
272	SLV 12	-25	-2230	5276	105.21	-13.3	-0.01
272	SLV 13	-1	306	5631	-17.56	-1.59	0.03
272	SLV 14	-1	306	5631	-17.56	-1.59	0.03
272	SLV 15	-15	-937	5816	42.17	-8.89	0.02
272	SLV 16	-15	-937	5816	42.17	-8.89	0.02
273	SLU 1	0	-84	4449	-9.11	-0.36	0
273	SLU 2	0	-86	4424	-8.86	-0.34	0
273	SLU 3	0	-94	4588	-9.18	-0.38	0
273	SLU 4	0	-95	4573	-9.03	-0.37	0
273	SLU 5	0	-95	4508	-8.78	-0.35	0
273	SLU 6	0	-103	4672	-9.11	-0.4	0
273	SLU 7	0	-104	4657	-8.96	-0.38	0
273	SLU 8	0	-102	4617	-8.95	-0.39	0
273	SLU 9	0	-103	4602	-8.8	-0.38	0
273	SLU 10	0	-108	5067	-10.23	-0.38	0
273	SLU 11	0	-116	5231	-10.55	-0.42	0
273	SLU 12	0	-117	5216	-10.4	-0.41	0
273	SLU 13	0	-117	5151	-10.15	-0.39	0
273	SLU 14	0	-125	5315	-10.48	-0.44	0
273	SLU 15	0	-126	5300	-10.32	-0.42	0
273	SLU 16	0	-124	5260	-10.32	-0.43	0
273	SLU 17	0	-125	5245	-10.17	-0.42	0
273	SLU 18	0	-115	5368	-11.06	-0.42	0
273	SLU 19	0	-116	5352	-10.91	-0.41	0
273	SLU 20	0	-124	5452	-10.99	-0.43	0
273	SLU 21	0	-125	5436	-10.84	-0.42	0
273	SLU 22	0	-107	5074	-10.33	-0.41	0
273	SLU 23	0	-109	5049	-10.08	-0.39	0
273	SLU 24	0	-117	5213	-10.41	-0.43	0
273	SLU 25	0	-118	5198	-10.26	-0.41	0
273	SLU 26	0	-118	5133	-10	-0.4	0
273	SLU 27	0	-126	5297	-10.33	-0.44	0
273	SLU 28	0	-127	5282	-10.18	-0.43	0
273	SLU 29	0	-125	5242	-10.18	-0.44	0
273	SLU 30	0	-126	5227	-10.03	-0.42	0
273	SLU 31	0	-131	5692	-11.45	-0.43	0
273	SLU 32	0	-139	5856	-11.77	-0.47	0
273	SLU 33	0	-140	5841	-11.62	-0.45	0
273	SLU 34	0	-140	5776	-11.37	-0.44	0
273	SLU 35	0	-148	5940	-11.7	-0.48	0
273	SLU 36	0	-149	5925	-11.55	-0.47	0
273	SLU 37	0	-147	5885	-11.55	-0.48	0
273	SLU 38	0	-148	5870	-11.4	-0.46	0
273	SLU 39	0	-138	5993	-12.29	-0.47	0
273	SLU 40	0	-139	5977	-12.14	-0.45	0
273	SLU 41	0	-147	6077	-12.21	-0.48	0
273	SLU 42	0	-148	6061	-12.06	-0.47	0
273	SLU 43	0	-101	5570	-11.42	-0.46	0
273	SLU 44	0	-103	5544	-11.17	-0.43	0
273	SLU 45	0	-111	5709	-11.5	-0.47	0
273	SLU 46	0	-112	5694	-11.35	-0.46	0
273	SLU 47	0	-112	5628	-11.09	-0.45	0
273	SLU 48	0	-120	5793	-11.42	-0.49	0
273	SLU 49	0	-121	5777	-11.27	-0.48	0
273	SLU 50	0	-120	5738	-11.27	-0.49	0
273	SLU 51	0	-121	5723	-11.12	-0.47	0

Nodo	Cont.	Reazione a traslazione			Reazione a rotazione		
Ind.	N.br.	x	y	z	x	y	z
273	SLU 52	0	-125	6187	-12.54	-0.47	0
273	SLU 53	0	-133	6352	-12.86	-0.51	0
273	SLU 54	0	-134	6336	-12.71	-0.5	0
273	SLU 55	0	-134	6271	-12.46	-0.49	0
273	SLU 56	0	-142	6436	-12.79	-0.53	0
273	SLU 57	0	-143	6420	-12.64	-0.52	0
273	SLU 58	0	-141	6381	-12.64	-0.53	0
273	SLU 59	0	-143	6365	-12.49	-0.51	0
273	SLU 60	0	-133	6488	-13.38	-0.51	0
273	SLU 61	0	-134	6473	-13.23	-0.5	0
273	SLU 62	0	-142	6572	-13.3	-0.53	0
273	SLU 63	0	-143	6557	-13.15	-0.51	0
273	SLU 64	0	-124	6195	-12.64	-0.5	0
273	SLU 65	0	-126	6169	-12.39	-0.48	0
273	SLU 66	0	-134	6334	-12.72	-0.52	0
273	SLU 67	0	-135	6319	-12.57	-0.51	0
273	SLU 68	0	-135	6253	-12.32	-0.49	0
273	SLU 69	0	-143	6418	-12.64	-0.53	0
273	SLU 70	0	-144	6402	-12.49	-0.52	0
273	SLU 71	0	-142	6363	-12.49	-0.53	0
273	SLU 72	0	-144	6348	-12.34	-0.52	0
273	SLU 73	0	-148	6812	-13.76	-0.52	0
273	SLU 74	0	-156	6977	-14.09	-0.56	0
273	SLU 75	0	-157	6961	-13.94	-0.55	0
273	SLU 76	0	-157	6896	-13.69	-0.53	0
273	SLU 77	0	-165	7061	-14.01	-0.57	0
273	SLU 78	0	-166	7045	-13.86	-0.56	0
273	SLU 79	0	-164	7006	-13.86	-0.57	0
273	SLU 80	0	-165	6990	-13.71	-0.56	0
273	SLU 81	0	-155	7113	-14.6	-0.56	0
273	SLU 82	0	-157	7098	-14.45	-0.54	0
273	SLU 83	0	-165	7197	-14.52	-0.57	0
273	SLU 84	0	-166	7182	-14.37	-0.56	0
273	SLE RA 1	0	-91	4628	-9.46	-0.38	0
273	SLE RA 2	0	-92	4611	-9.29	-0.36	0
273	SLE RA 3	0	-97	4721	-9.51	-0.39	0
273	SLE RA 4	0	-98	4710	-9.41	-0.38	0
273	SLE RA 5	0	-98	4667	-9.24	-0.37	0
273	SLE RA 6	0	-103	4777	-9.46	-0.4	0
273	SLE RA 7	0	-104	4766	-9.36	-0.39	0
273	SLE RA 8	0	-103	4740	-9.36	-0.4	0
273	SLE RA 9	0	-103	4730	-9.26	-0.39	0
273	SLE RA 10	0	-106	5039	-10.2	-0.39	0
273	SLE RA 11	0	-112	5149	-10.42	-0.41	0
273	SLE RA 12	0	-112	5139	-10.32	-0.41	0
273	SLE RA 13	0	-112	5095	-10.15	-0.4	0
273	SLE RA 14	0	-118	5205	-10.37	-0.42	0
273	SLE RA 15	0	-118	5195	-10.27	-0.42	0
273	SLE RA 16	0	-117	5168	-10.27	-0.42	0
273	SLE RA 17	0	-118	5158	-10.17	-0.41	0
273	SLE RA 18	0	-111	5240	-10.76	-0.41	0
273	SLE RA 19	0	-112	5230	-10.66	-0.4	0
273	SLE RA 20	0	-117	5296	-10.71	-0.42	0
273	SLE RA 21	0	-118	5286	-10.61	-0.41	0
273	SLE FR 1	0	-91	4628	-9.46	-0.38	0
273	SLE FR 2	0	-91	4625	-9.42	-0.37	0
273	SLE FR 3	0	-93	4650	-9.44	-0.38	0
273	SLE FR 4	0	-97	4808	-9.81	-0.38	0
273	SLE FR 5	0	-99	4834	-9.83	-0.39	0
273	SLE FR 6	0	-101	4934	-10.11	-0.39	0
273	SLE QP 1	0	-91	4628	-9.46	-0.38	0
273	SLE QP 2	0	-97	4812	-9.85	-0.39	0
273	SLD 1	10	270	4438	-13.22	11.51	-0.02
273	SLD 2	10	270	4438	-13.22	11.51	-0.02
273	SLD 3	9	-141	4630	7.96	9.39	-0.02
273	SLD 4	9	-141	4630	7.96	9.39	-0.02
273	SLD 5	6	638	4408	-42.99	6.39	-0.01
273	SLD 6	6	638	4408	-42.99	6.39	-0.01
273	SLD 7	-1	-735	5049	27.63	-0.66	0
273	SLD 8	-1	-735	5049	27.63	-0.66	0
273	SLD 9	0	541	4575	-47.32	-0.11	0
273	SLD 10	0	541	4575	-47.32	-0.11	0
273	SLD 11	-6	-831	5216	23.29	-7.16	0.01
273	SLD 12	-6	-831	5216	23.29	-7.16	0.01
273	SLD 13	-9	-52	4993	-27.66	-10.17	0.02
273	SLD 14	-9	-52	4993	-27.66	-10.17	0.02
273	SLD 15	-11	-464	5186	-6.48	-12.28	0.02
273	SLD 16	-11	-464	5186	-6.48	-12.28	0.02
273	SLV 1	26	777	3928	-17.97	29.55	-0.05
273	SLV 2	26	777	3928	-17.97	29.55	-0.05
273	SLV 3	21	-206	4390	32.67	24.15	-0.04
273	SLV 4	21	-206	4390	32.67	24.15	-0.04
273	SLV 5	15	1657	3845	-89.08	16.78	-0.03
273	SLV 6	15	1657	3845	-89.08	16.78	-0.03
273	SLV 7	-1	-1622	5386	79.7	-1.21	0
273	SLV 8	-1	-1622	5386	79.7	-1.21	0
273	SLV 9	1	1428	4237	-99.4	0.44	0
273	SLV 10	1	1428	4237	-99.4	0.44	0
273	SLV 11	-16	-1851	5778	69.38	-17.55	0.03
273	SLV 12	-16	-1851	5778	69.38	-17.55	0.03

Nodo	Cont.	Reazione a traslazione			Reazione a rotazione		
Ind.	N.br.	x	y	z	x	y	z
273	SLV 13	-22	13	5233	-52.36	-24.92	0.04
273	SLV 14	-22	13	5233	-52.36	-24.92	0.04
273	SLV 15	-27	-971	5696	-1.73	-30.32	0.05
273	SLV 16	-27	-971	5696	-1.73	-30.32	0.05
274	SLU 1	39	-573	6072	6.2	30.64	0.28
274	SLU 2	38	-492	5945	3.97	30.53	0.28
274	SLU 3	41	-594	6284	6.34	31.88	0.29
274	SLU 4	40	-545	6208	5	31.81	0.29
274	SLU 5	40	-505	6107	4	31.46	0.29
274	SLU 6	42	-607	6445	6.38	32.81	0.3
274	SLU 7	41	-558	6369	5.04	32.74	0.3
274	SLU 8	41	-600	6395	6.27	32.5	0.3
274	SLU 9	41	-551	6318	4.93	32.43	0.3
274	SLU 10	43	-564	6621	4.82	34.46	0.31
274	SLU 11	45	-666	6960	7.19	35.81	0.33
274	SLU 12	45	-617	6883	5.86	35.74	0.33
274	SLU 13	45	-578	6782	4.85	35.39	0.32
274	SLU 14	47	-680	7121	7.23	36.74	0.34
274	SLU 15	46	-631	7045	5.89	36.67	0.33
274	SLU 16	46	-672	7070	7.12	36.43	0.33
274	SLU 17	46	-624	6994	5.78	36.36	0.33
274	SLU 18	46	-676	7037	7.42	36.25	0.33
274	SLU 19	46	-628	6961	6.08	36.19	0.33
274	SLU 20	47	-690	7199	7.45	37.18	0.34
274	SLU 21	47	-641	7122	6.11	37.11	0.34
274	SLU 22	44	-646	6758	7.02	34.64	0.32
274	SLU 23	44	-565	6631	4.79	34.53	0.31
274	SLU 24	46	-667	6970	7.16	35.88	0.33
274	SLU 25	45	-618	6894	5.82	35.81	0.33
274	SLU 26	45	-579	6793	4.82	35.45	0.32
274	SLU 27	47	-681	7131	7.2	36.8	0.34
274	SLU 28	46	-632	7055	5.86	36.74	0.34
274	SLU 29	46	-673	7081	7.09	36.49	0.33
274	SLU 30	46	-625	7004	5.75	36.43	0.33
274	SLU 31	48	-638	7307	5.64	38.45	0.35
274	SLU 32	50	-739	7646	8.01	39.8	0.36
274	SLU 33	50	-691	7569	6.67	39.73	0.36
274	SLU 34	50	-651	7468	5.67	39.38	0.36
274	SLU 35	52	-753	7807	8.05	40.73	0.37
274	SLU 36	51	-704	7731	6.71	40.66	0.37
274	SLU 37	51	-746	7756	7.94	40.42	0.37
274	SLU 38	51	-697	7680	6.6	40.35	0.37
274	SLU 39	51	-750	7723	8.23	40.25	0.37
274	SLU 40	51	-701	7647	6.9	40.18	0.37
274	SLU 41	52	-763	7885	8.27	41.18	0.38
274	SLU 42	52	-715	7808	6.93	41.11	0.37
274	SLU 43	49	-719	7659	7.78	38.47	0.35
274	SLU 44	48	-638	7532	5.55	38.36	0.35
274	SLU 45	51	-740	7870	7.92	39.71	0.36
274	SLU 46	50	-692	7794	6.58	39.64	0.36
274	SLU 47	50	-652	7693	5.58	39.28	0.36
274	SLU 48	52	-754	8031	7.95	40.63	0.37
274	SLU 49	51	-705	7955	6.62	40.57	0.37
274	SLU 50	51	-747	7981	7.85	40.33	0.37
274	SLU 51	51	-698	7905	6.51	40.26	0.37
274	SLU 52	53	-711	8207	6.4	42.28	0.38
274	SLU 53	55	-813	8546	8.77	43.63	0.4
274	SLU 54	55	-764	8470	7.43	43.56	0.4
274	SLU 55	55	-724	8369	6.43	43.21	0.39
274	SLU 56	57	-826	8707	8.81	44.56	0.41
274	SLU 57	56	-778	8631	7.47	44.49	0.41
274	SLU 58	56	-819	8657	8.7	44.25	0.41
274	SLU 59	56	-770	8581	7.36	44.18	0.4
274	SLU 60	56	-823	8624	8.99	44.08	0.4
274	SLU 61	56	-774	8548	7.66	44.01	0.4
274	SLU 62	57	-836	8785	9.03	45.01	0.41
274	SLU 63	57	-788	8709	7.69	44.94	0.41
274	SLU 64	54	-793	8345	8.6	42.46	0.39
274	SLU 65	53	-712	8218	6.37	42.35	0.39
274	SLU 66	56	-814	8556	8.74	43.7	0.4
274	SLU 67	55	-765	8480	7.4	43.63	0.4
274	SLU 68	55	-725	8379	6.4	43.28	0.39
274	SLU 69	57	-827	8717	8.77	44.63	0.41
274	SLU 70	56	-779	8641	7.44	44.56	0.41
274	SLU 71	56	-820	8667	8.67	44.32	0.41
274	SLU 72	56	-771	8591	7.33	44.25	0.4
274	SLU 73	58	-784	8893	7.22	46.28	0.42
274	SLU 74	60	-886	9232	9.59	47.63	0.44
274	SLU 75	60	-837	9156	8.25	47.56	0.43
274	SLU 76	60	-798	9055	7.25	47.2	0.43
274	SLU 77	62	-900	9393	9.63	48.55	0.44
274	SLU 78	61	-851	9317	8.29	48.49	0.44
274	SLU 79	61	-892	9343	9.52	48.25	0.44
274	SLU 80	61	-844	9267	8.18	48.18	0.44
274	SLU 81	61	-896	9310	9.81	48.07	0.44
274	SLU 82	61	-848	9234	8.48	48	0.44
274	SLU 83	62	-910	9471	9.85	49	0.45
274	SLU 84	62	-861	9395	8.51	48.93	0.45
274	SLE RA 1	40	-594	6268	6.43	31.79	0.29
274	SLE RA 2	40	-540	6184	4.95	31.71	0.29

Nodo	Cont.	Reazione a traslazione			Reazione a rotazione		
Ind.	N.br.	x	y	z	x	y	z
274	SLE RA 3	41	-608	6409	6.53	32.61	0.3
274	SLE RA 4	41	-575	6359	5.64	32.57	0.3
274	SLE RA 5	41	-549	6291	4.97	32.33	0.29
274	SLE RA 6	42	-617	6517	6.55	33.23	0.3
274	SLE RA 7	42	-584	6466	5.66	33.18	0.3
274	SLE RA 8	42	-612	6483	6.48	33.02	0.3
274	SLE RA 9	42	-579	6432	5.59	32.98	0.3
274	SLE RA 10	43	-588	6634	5.51	34.33	0.31
274	SLE RA 11	45	-656	6860	7.1	35.23	0.32
274	SLE RA 12	45	-623	6809	6.2	35.18	0.32
274	SLE RA 13	44	-597	6742	5.54	34.95	0.32
274	SLE RA 14	46	-665	6967	7.12	35.85	0.33
274	SLE RA 15	45	-632	6916	6.23	35.8	0.33
274	SLE RA 16	45	-660	6934	7.05	35.64	0.33
274	SLE RA 17	45	-628	6883	6.15	35.6	0.32
274	SLE RA 18	45	-663	6912	7.24	35.52	0.32
274	SLE RA 19	45	-630	6861	6.35	35.48	0.32
274	SLE RA 20	46	-672	7019	7.27	36.14	0.33
274	SLE RA 21	46	-639	6968	6.37	36.1	0.33
274	SLE FR 1	40	-594	6268	6.43	31.79	0.29
274	SLE FR 2	40	-583	6251	6.14	31.77	0.29
274	SLE FR 3	41	-597	6311	6.44	32.03	0.29
274	SLE FR 4	42	-604	6444	6.38	32.89	0.3
274	SLE FR 5	42	-618	6504	6.69	33.15	0.3
274	SLE FR 6	43	-628	6590	6.84	33.65	0.31
274	SLE QP 1	40	-594	6268	6.43	31.79	0.29
274	SLE QP 2	42	-614	6461	6.68	32.91	0.3
274	SLD 1	76	-552	7801	-1.44	60.39	0.55
274	SLD 2	76	-552	7801	-1.44	60.39	0.55
274	SLD 3	89	-898	8353	9.1	71.57	0.64
274	SLD 4	89	-898	8353	9.1	71.57	0.64
274	SLD 5	31	-70	6026	-11.73	24.19	0.23
274	SLD 6	31	-70	6026	-11.73	24.19	0.23
274	SLD 7	77	-1225	7866	23.37	61.47	0.55
274	SLD 8	77	-1225	7866	23.37	61.47	0.55
274	SLD 9	7	-4	5056	-10.02	4.35	0.06
274	SLD 10	7	-4	5056	-10.02	4.35	0.06
274	SLD 11	52	-1159	6897	25.08	41.62	0.37
274	SLD 12	52	-1159	6897	25.08	41.62	0.37
274	SLD 13	-6	-331	4570	4.26	-5.76	-0.04
274	SLD 14	-6	-331	4570	4.26	-5.76	-0.04
274	SLD 15	8	-677	5122	14.79	5.42	0.06
274	SLD 16	8	-677	5122	14.79	5.42	0.06
274	SLV 1	121	-469	9591	-12.37	96.98	0.87
274	SLV 2	121	-469	9591	-12.37	96.98	0.87
274	SLV 3	154	-1282	10903	12.28	124.17	1.1
274	SLV 4	154	-1282	10903	12.28	124.17	1.1
274	SLV 5	16	661	5409	-36.43	10.9	0.12
274	SLV 6	16	661	5409	-36.43	10.9	0.12
274	SLV 7	125	-2047	9785	45.75	101.51	0.89
274	SLV 8	125	-2047	9785	45.75	101.51	0.89
274	SLV 9	-42	818	3138	-32.39	-35.7	-0.29
274	SLV 10	-42	818	3138	-32.39	-35.7	-0.29
274	SLV 11	68	-1890	7513	49.78	54.91	0.48
274	SLV 12	68	-1890	7513	49.78	54.91	0.48
274	SLV 13	-70	53	2019	1.07	-58.35	-0.5
274	SLV 14	-70	53	2019	1.07	-58.35	-0.5
274	SLV 15	-37	-760	3332	25.72	-31.17	-0.27
274	SLV 16	-37	-760	3332	25.72	-31.17	-0.27
275	SLU 1	4	-688	5861	28.72	3.05	-0.01
275	SLU 2	4	-600	5728	24.56	2.46	-0.01
275	SLU 3	5	-707	6076	29.51	3.14	-0.01
275	SLU 4	4	-655	5996	27.02	2.78	-0.01
275	SLU 5	4	-610	5892	24.94	2.52	-0.01
275	SLU 6	5	-717	6240	29.88	3.2	-0.01
275	SLU 7	4	-664	6160	27.39	2.84	-0.01
275	SLU 8	5	-707	6189	29.46	3.17	-0.01
275	SLU 9	4	-654	6109	26.97	2.82	-0.01
275	SLU 10	5	-694	6409	28.42	2.77	-0.01
275	SLU 11	5	-801	6758	33.37	3.45	-0.01
275	SLU 12	5	-748	6678	30.87	3.1	-0.01
275	SLU 13	5	-703	6573	28.79	2.83	-0.01
275	SLU 14	5	-810	6922	33.74	3.51	-0.01
275	SLU 15	5	-758	6842	31.25	3.16	-0.01
275	SLU 16	5	-800	6870	33.32	3.49	-0.01
275	SLU 17	5	-748	6790	30.83	3.13	-0.01
275	SLU 18	5	-821	6835	34.23	3.5	-0.01
275	SLU 19	5	-769	6755	31.73	3.14	-0.01
275	SLU 20	5	-831	6999	34.6	3.56	-0.01
275	SLU 21	5	-778	6919	32.11	3.21	-0.01
275	SLU 22	5	-779	6543	32.49	3.36	-0.01
275	SLU 23	5	-692	6409	28.33	2.77	-0.01
275	SLU 24	5	-798	6758	33.28	3.45	-0.01
275	SLU 25	5	-746	6678	30.79	3.1	-0.01
275	SLU 26	5	-701	6573	28.7	2.83	-0.01
275	SLU 27	5	-808	6922	33.65	3.51	-0.01
275	SLU 28	5	-756	6842	31.16	3.16	-0.01
275	SLU 29	5	-798	6870	33.23	3.49	-0.01
275	SLU 30	5	-746	6790	30.74	3.13	-0.01
275	SLU 31	5	-785	7091	32.19	3.09	-0.01

Nodo	Cont.	Reazione a traslazione			Reazione a rotazione		
Ind.	N.br.	x	y	z	x	y	z
275	SLU 32	6	-892	7440	37.14	3.77	-0.01
275	SLU 33	5	-840	7360	34.64	3.41	-0.01
275	SLU 34	5	-795	7255	32.56	3.15	-0.01
275	SLU 35	6	-901	7603	37.51	3.83	-0.01
275	SLU 36	6	-849	7523	35.02	3.47	-0.01
275	SLU 37	6	-892	7552	37.09	3.8	-0.01
275	SLU 38	6	-839	7472	34.59	3.45	-0.01
275	SLU 39	6	-913	7517	38	3.82	-0.01
275	SLU 40	6	-860	7437	35.5	3.46	-0.01
275	SLU 41	6	-922	7680	38.37	3.88	-0.01
275	SLU 42	6	-870	7600	35.87	3.52	-0.01
275	SLU 43	6	-862	7386	36.04	3.86	-0.01
275	SLU 44	5	-775	7252	31.89	3.26	-0.01
275	SLU 45	6	-882	7601	36.83	3.94	-0.01
275	SLU 46	6	-830	7521	34.34	3.59	-0.01
275	SLU 47	5	-785	7416	32.26	3.32	-0.01
275	SLU 48	6	-891	7765	37.21	4	-0.01
275	SLU 49	6	-839	7685	34.71	3.65	-0.01
275	SLU 50	6	-881	7713	36.79	3.98	-0.01
275	SLU 51	6	-829	7633	34.29	3.62	-0.01
275	SLU 52	6	-869	7934	35.74	3.58	-0.01
275	SLU 53	6	-976	8283	40.69	4.26	-0.01
275	SLU 54	6	-923	8203	38.2	3.9	-0.01
275	SLU 55	6	-878	8098	36.11	3.64	-0.01
275	SLU 56	6	-985	8446	41.06	4.32	-0.01
275	SLU 57	6	-933	8366	38.57	3.96	-0.01
275	SLU 58	6	-975	8395	40.64	4.29	-0.01
275	SLU 59	6	-923	8315	38.15	3.94	-0.01
275	SLU 60	6	-996	8360	41.55	4.31	-0.01
275	SLU 61	6	-944	8280	39.06	3.95	-0.01
275	SLU 62	6	-1006	8523	41.92	4.37	-0.01
275	SLU 63	6	-953	8443	39.43	4.01	-0.01
275	SLU 64	6	-954	8067	39.81	4.17	-0.01
275	SLU 65	6	-867	7934	35.66	3.58	-0.01
275	SLU 66	6	-973	8283	40.6	4.26	-0.01
275	SLU 67	6	-921	8203	38.11	3.9	-0.01
275	SLU 68	6	-876	8098	36.03	3.64	-0.01
275	SLU 69	6	-983	8446	40.98	4.32	-0.01
275	SLU 70	6	-930	8366	38.48	3.96	-0.01
275	SLU 71	6	-973	8395	40.55	4.29	-0.01
275	SLU 72	6	-920	8315	38.06	3.94	-0.01
275	SLU 73	6	-960	8616	39.51	3.89	-0.01
275	SLU 74	7	-1067	8964	44.46	4.57	-0.01
275	SLU 75	7	-1015	8884	41.97	4.22	-0.01
275	SLU 76	6	-970	8780	39.88	3.96	-0.01
275	SLU 77	7	-1076	9128	44.83	4.63	-0.01
275	SLU 78	7	-1024	9048	42.34	4.28	-0.01
275	SLU 79	7	-1066	9077	44.41	4.61	-0.01
275	SLU 80	7	-1014	8997	41.92	4.25	-0.01
275	SLU 81	7	-1088	9041	45.32	4.62	-0.01
275	SLU 82	7	-1035	8961	42.83	4.27	-0.01
275	SLU 83	7	-1097	9205	45.69	4.68	-0.01
275	SLU 84	7	-1045	9125	43.2	4.33	-0.01
275	SLE RA 1	5	-714	6056	29.79	3.14	-0.01
275	SLE RA 2	4	-655	5967	27.03	2.74	-0.01
275	SLE RA 3	5	-727	6199	30.32	3.2	-0.01
275	SLE RA 4	5	-692	6146	28.66	2.96	-0.01
275	SLE RA 5	4	-662	6076	27.27	2.79	-0.01
275	SLE RA 6	5	-733	6309	30.57	3.24	-0.01
275	SLE RA 7	5	-698	6255	28.91	3	-0.01
275	SLE RA 8	5	-726	6274	30.29	3.22	-0.01
275	SLE RA 9	5	-691	6221	28.63	2.98	-0.01
275	SLE RA 10	5	-718	6421	29.6	2.96	-0.01
275	SLE RA 11	5	-789	6654	32.89	3.41	-0.01
275	SLE RA 12	5	-754	6600	31.23	3.17	-0.01
275	SLE RA 13	5	-724	6531	29.84	3	-0.01
275	SLE RA 14	5	-795	6763	33.14	3.45	-0.01
275	SLE RA 15	5	-760	6710	31.48	3.21	-0.01
275	SLE RA 16	5	-789	6729	32.86	3.43	-0.01
275	SLE RA 17	5	-754	6675	31.2	3.19	-0.01
275	SLE RA 18	5	-803	6705	33.47	3.44	-0.01
275	SLE RA 19	5	-768	6652	31.81	3.2	-0.01
275	SLE RA 20	5	-809	6814	33.72	3.48	-0.01
275	SLE RA 21	5	-774	6761	32.05	3.24	-0.01
275	SLE FR 1	5	-714	6056	29.79	3.14	-0.01
275	SLE FR 2	5	-702	6038	29.24	3.06	-0.01
275	SLE FR 3	5	-716	6100	29.89	3.16	-0.01
275	SLE FR 4	5	-729	6233	30.34	3.15	-0.01
275	SLE FR 5	5	-743	6294	31	3.25	-0.01
275	SLE FR 6	5	-758	6381	31.63	3.29	-0.01
275	SLE QP 1	5	-714	6056	29.79	3.14	-0.01
275	SLE QP 2	5	-740	6251	30.9	3.23	-0.01
275	SLD 1	19	-419	4265	16.24	18.48	-0.03
275	SLD 2	19	-419	4265	16.24	18.48	-0.03
275	SLD 3	29	-787	4873	34.02	25.9	-0.05
275	SLD 4	29	-787	4873	34.02	25.9	-0.05
275	SLD 5	-5	-86	4732	-0.48	-3.44	0.02
275	SLD 6	-5	-86	4732	-0.48	-3.44	0.02
275	SLD 7	26	-1312	6760	58.81	21.28	-0.05
275	SLD 8	26	-1312	6760	58.81	21.28	-0.05

Nodo	Cont.	Reazione a traslazione			Reazione a rotazione		
Ind.	N.br.	x	y	z	x	y	z
275	SLD 9	-17	-168	5741	2.98	-14.82	0.04
275	SLD 10	-17	-168	5741	2.98	-14.82	0.04
275	SLD 11	15	-1395	7769	62.27	9.9	-0.03
275	SLD 12	15	-1395	7769	62.27	9.9	-0.03
275	SLD 13	-19	-694	7628	27.77	-19.44	0.03
275	SLD 14	-19	-694	7628	27.77	-19.44	0.03
275	SLD 15	-10	-1062	8237	45.55	-12.02	0.01
275	SLD 16	-10	-1062	8237	45.55	-12.02	0.01
275	SLV 1	39	13	1593	-3.51	39.59	-0.05
275	SLV 2	39	13	1593	-3.51	39.59	-0.05
275	SLV 3	63	-850	3033	38.18	58.25	-0.11
275	SLV 4	63	-850	3033	38.18	58.25	-0.11
275	SLV 5	-21	795	2669	-42.65	-14.16	0.06
275	SLV 6	-21	795	2669	-42.65	-14.16	0.06
275	SLV 7	59	-2082	7469	96.31	48.04	-0.12
275	SLV 8	59	-2082	7469	96.31	48.04	-0.12
275	SLV 9	-49	601	5032	-34.52	-41.58	0.1
275	SLV 10	-49	601	5032	-34.52	-41.58	0.1
275	SLV 11	31	-2276	9832	104.45	20.62	-0.07
275	SLV 12	31	-2276	9832	104.45	20.62	-0.07
275	SLV 13	-53	-631	9468	23.61	-51.79	0.09
275	SLV 14	-53	-631	9468	23.61	-51.79	0.09
275	SLV 15	-29	-1494	10908	65.3	-33.13	0.04
275	SLV 16	-29	-1494	10908	65.3	-33.13	0.04
276	SLU 1	8	-106	2954	-11.5	5.59	0
276	SLU 2	8	-105	2950	-11.59	5.59	0
276	SLU 3	8	-111	3043	-11.91	5.81	0
276	SLU 4	8	-110	3041	-11.96	5.8	0
276	SLU 5	8	-107	3007	-11.89	5.72	0
276	SLU 6	8	-114	3100	-12.2	5.94	0
276	SLU 7	8	-113	3098	-12.26	5.94	0
276	SLU 8	8	-112	3067	-12.1	5.87	0
276	SLU 9	8	-111	3065	-12.15	5.86	0
276	SLU 10	9	-134	3370	-12.59	6.52	0
276	SLU 11	9	-141	3463	-12.9	6.74	0
276	SLU 12	9	-140	3461	-12.96	6.73	0
276	SLU 13	9	-137	3427	-12.89	6.66	0
276	SLU 14	9	-144	3520	-13.2	6.87	0
276	SLU 15	9	-143	3518	-13.26	6.87	0
276	SLU 16	9	-141	3487	-13.1	6.8	0
276	SLU 17	9	-140	3485	-13.15	6.8	0
276	SLU 18	9	-149	3554	-12.93	6.92	0
276	SLU 19	9	-148	3552	-12.98	6.92	0
276	SLU 20	10	-151	3610	-13.23	7.06	0
276	SLU 21	10	-150	3608	-13.28	7.06	0
276	SLU 22	9	-133	3354	-12.66	6.49	0
276	SLU 23	9	-131	3350	-12.74	6.49	0
276	SLU 24	9	-138	3443	-13.06	6.7	0
276	SLU 25	9	-137	3441	-13.11	6.7	0
276	SLU 26	9	-134	3407	-13.04	6.62	0
276	SLU 27	9	-140	3500	-13.36	6.84	0
276	SLU 28	9	-139	3498	-13.41	6.84	0
276	SLU 29	9	-138	3467	-13.26	6.77	0
276	SLU 30	9	-137	3465	-13.31	6.76	0
276	SLU 31	10	-161	3770	-13.74	7.42	0
276	SLU 32	10	-167	3863	-14.06	7.64	0
276	SLU 33	10	-166	3861	-14.11	7.63	0
276	SLU 34	10	-163	3827	-14.04	7.55	0
276	SLU 35	11	-170	3920	-14.36	7.77	0
276	SLU 36	11	-169	3918	-14.41	7.77	0
276	SLU 37	10	-168	3887	-14.25	7.7	0
276	SLU 38	10	-167	3885	-14.31	7.69	0
276	SLU 39	11	-175	3953	-14.08	7.82	0
276	SLU 40	11	-174	3951	-14.14	7.82	0
276	SLU 41	11	-178	4010	-14.38	7.96	0
276	SLU 42	11	-177	4008	-14.44	7.96	0
276	SLU 43	9	-129	3703	-14.56	6.96	0
276	SLU 44	9	-127	3699	-14.64	6.96	0
276	SLU 45	10	-134	3792	-14.96	7.17	0
276	SLU 46	10	-133	3790	-15.01	7.17	0
276	SLU 47	10	-130	3756	-14.94	7.09	0
276	SLU 48	10	-137	3849	-15.26	7.31	0
276	SLU 49	10	-136	3847	-15.31	7.31	0
276	SLU 50	10	-134	3816	-15.15	7.24	0
276	SLU 51	10	-133	3814	-15.21	7.23	0
276	SLU 52	11	-157	4119	-15.64	7.89	0
276	SLU 53	11	-164	4212	-15.96	8.11	0
276	SLU 54	11	-163	4210	-16.01	8.1	0
276	SLU 55	11	-160	4176	-15.94	8.02	0
276	SLU 56	11	-166	4269	-16.26	8.24	0
276	SLU 57	11	-165	4267	-16.31	8.24	0
276	SLU 58	11	-164	4236	-16.15	8.17	0
276	SLU 59	11	-163	4234	-16.2	8.17	0
276	SLU 60	11	-172	4303	-15.98	8.29	0
276	SLU 61	11	-171	4301	-16.03	8.29	0
276	SLU 62	11	-174	4359	-16.28	8.43	0
276	SLU 63	11	-173	4357	-16.33	8.43	0
276	SLU 64	11	-156	4103	-15.71	7.86	0
276	SLU 65	11	-154	4099	-15.8	7.86	0
276	SLU 66	11	-161	4192	-16.12	8.07	0

Nodo	Cont.	Reazione a traslazione			Reazione a rotazione		
Ind.	N.br.	x	y	z	x	y	z
276	SLU 67	11	-159	4190	-16.17	8.07	0
276	SLU 68	11	-156	4156	-16.1	7.99	0
276	SLU 69	11	-163	4249	-16.41	8.21	0
276	SLU 70	11	-162	4247	-16.47	8.21	0
276	SLU 71	11	-161	4216	-16.31	8.14	0
276	SLU 72	11	-160	4214	-16.36	8.13	0
276	SLU 73	12	-184	4519	-16.8	8.79	0
276	SLU 74	12	-190	4612	-17.11	9	0
276	SLU 75	12	-189	4610	-17.17	9	0
276	SLU 76	12	-186	4576	-17.1	8.92	0
276	SLU 77	12	-193	4669	-17.41	9.14	0
276	SLU 78	12	-192	4667	-17.47	9.14	0
276	SLU 79	12	-191	4636	-17.31	9.07	0
276	SLU 80	12	-190	4634	-17.36	9.06	0
276	SLU 81	12	-198	4702	-17.14	9.19	0
276	SLU 82	12	-197	4700	-17.19	9.19	0
276	SLU 83	13	-201	4759	-17.44	9.33	0
276	SLU 84	13	-200	4757	-17.49	9.33	0
276	SLE RA 1	8	-114	3068	-11.83	5.85	0
276	SLE RA 2	8	-113	3066	-11.89	5.85	0
276	SLE RA 3	8	-117	3128	-12.1	5.99	0
276	SLE RA 4	8	-116	3126	-12.14	5.99	0
276	SLE RA 5	8	-114	3103	-12.09	5.94	0
276	SLE RA 6	8	-119	3165	-12.3	6.08	0
276	SLE RA 7	8	-118	3164	-12.34	6.08	0
276	SLE RA 8	8	-117	3143	-12.23	6.03	0
276	SLE RA 9	8	-117	3142	-12.27	6.03	0
276	SLE RA 10	9	-133	3346	-12.56	6.47	0
276	SLE RA 11	9	-137	3408	-12.77	6.61	0
276	SLE RA 12	9	-136	3406	-12.8	6.61	0
276	SLE RA 13	9	-134	3383	-12.75	6.56	0
276	SLE RA 14	9	-139	3445	-12.97	6.7	0
276	SLE RA 15	9	-138	3444	-13	6.7	0
276	SLE RA 16	9	-137	3423	-12.9	6.65	0
276	SLE RA 17	9	-137	3422	-12.93	6.65	0
276	SLE RA 18	9	-142	3468	-12.78	6.74	0
276	SLE RA 19	9	-142	3467	-12.82	6.73	0
276	SLE RA 20	9	-144	3506	-12.98	6.83	0
276	SLE RA 21	9	-143	3504	-13.02	6.83	0
276	SLE FR 1	8	-114	3068	-11.83	5.85	0
276	SLE FR 2	8	-114	3067	-11.84	5.85	0
276	SLE FR 3	8	-115	3083	-11.91	5.89	0
276	SLE FR 4	8	-122	3187	-12.13	6.12	0
276	SLE FR 5	8	-123	3203	-12.2	6.15	0
276	SLE FR 6	9	-128	3268	-12.31	6.29	0
276	SLE QP 1	8	-114	3068	-11.83	5.85	0
276	SLE QP 2	8	-122	3188	-12.12	6.12	0
276	SLD 1	13	-46	3575	-16.65	9.24	-0.01
276	SLD 2	13	-46	3575	-16.65	9.24	-0.01
276	SLD 3	17	-419	3415	0.29	12.03	-0.01
276	SLD 4	17	-419	3415	0.29	12.03	-0.01
276	SLD 5	2	467	3547	-39.16	2.81	-0.01
276	SLD 6	2	467	3547	-39.16	2.81	-0.01
276	SLD 7	18	-778	3013	17.29	12.13	0
276	SLD 8	18	-778	3013	17.29	12.13	0
276	SLD 9	-1	533	3363	-41.52	0.1	-0.01
276	SLD 10	-1	533	3363	-41.52	0.1	-0.01
276	SLD 11	14	-712	2828	14.93	9.42	0.01
276	SLD 12	14	-712	2828	14.93	9.42	0.01
276	SLD 13	-1	175	2961	-24.52	0.2	0
276	SLD 14	-1	175	2961	-24.52	0.2	0
276	SLD 15	4	-199	2800	-7.59	3	0.01
276	SLD 16	4	-199	2800	-7.59	3	0.01
276	SLV 1	18	66	4101	-23.03	13.28	-0.02
276	SLV 2	18	66	4101	-23.03	13.28	-0.02
276	SLV 3	30	-832	3714	17.57	20.11	-0.01
276	SLV 4	30	-832	3714	17.57	20.11	-0.01
276	SLV 5	-6	1295	4048	-76.97	-2.09	-0.02
276	SLV 6	-6	1295	4048	-76.97	-2.09	-0.02
276	SLV 7	32	-1697	2759	58.37	20.67	0.01
276	SLV 8	32	-1697	2759	58.37	20.67	0.01
276	SLV 9	-15	1452	3617	-82.61	-8.43	-0.02
276	SLV 10	-15	1452	3617	-82.61	-8.43	-0.02
276	SLV 11	23	-1540	2328	52.74	14.32	0.02
276	SLV 12	23	-1540	2328	52.74	14.32	0.02
276	SLV 13	-13	587	2662	-41.81	-7.87	0.01
276	SLV 14	-13	587	2662	-41.81	-7.87	0.01
276	SLV 15	-1	-311	2275	-1.21	-1.05	0.02
276	SLV 16	-1	-311	2275	-1.21	-1.05	0.02
277	SLU 1	24	-522	3155	35.98	18.42	-0.09
277	SLU 2	24	-521	3153	35.89	18.25	-0.09
277	SLU 3	25	-543	3258	37.44	19.18	-0.09
277	SLU 4	25	-542	3257	37.39	19.08	-0.09
277	SLU 5	24	-536	3225	36.93	18.77	-0.09
277	SLU 6	26	-557	3330	38.48	19.7	-0.1
277	SLU 7	25	-557	3329	38.43	19.6	-0.09
277	SLU 8	25	-551	3299	38.06	19.46	-0.09
277	SLU 9	25	-551	3298	38	19.36	-0.09
277	SLU 10	27	-598	3555	41.33	21.19	-0.1
277	SLU 11	29	-619	3660	42.88	22.11	-0.11

Nodo	Cont.	Reazione a traslazione			Reazione a rotazione		
Ind.	N.br.	x	y	z	x	y	z
277	SLU 12	28	-619	3659	42.82	22.01	-0.11
277	SLU 13	28	-612	3627	42.36	21.71	-0.1
277	SLU 14	29	-634	3732	43.91	22.64	-0.11
277	SLU 15	29	-633	3731	43.86	22.54	-0.11
277	SLU 16	29	-628	3701	43.49	22.4	-0.11
277	SLU 17	29	-627	3700	43.44	22.3	-0.11
277	SLU 18	29	-631	3729	43.74	22.61	-0.11
277	SLU 19	29	-631	3728	43.69	22.51	-0.11
277	SLU 20	30	-646	3801	44.78	23.13	-0.11
277	SLU 21	30	-646	3800	44.73	23.04	-0.11
277	SLU 22	28	-598	3552	41.36	21.34	-0.1
277	SLU 23	27	-597	3550	41.27	21.17	-0.1
277	SLU 24	29	-618	3655	42.82	22.1	-0.11
277	SLU 25	28	-618	3654	42.77	22	-0.11
277	SLU 26	28	-612	3622	42.31	21.7	-0.1
277	SLU 27	29	-633	3727	43.86	22.62	-0.11
277	SLU 28	29	-632	3726	43.81	22.52	-0.11
277	SLU 29	29	-627	3696	43.43	22.39	-0.11
277	SLU 30	29	-627	3695	43.38	22.29	-0.11
277	SLU 31	31	-673	3952	46.71	24.11	-0.12
277	SLU 32	32	-695	4057	48.25	25.03	-0.12
277	SLU 33	32	-694	4056	48.2	24.94	-0.12
277	SLU 34	32	-688	4024	47.74	24.63	-0.12
277	SLU 35	33	-709	4129	49.29	25.56	-0.12
277	SLU 36	33	-709	4128	49.24	25.46	-0.12
277	SLU 37	33	-704	4098	48.87	25.32	-0.12
277	SLU 38	33	-703	4097	48.82	25.22	-0.12
277	SLU 39	33	-707	4126	49.12	25.53	-0.12
277	SLU 40	33	-706	4125	49.07	25.43	-0.12
277	SLU 41	34	-722	4198	50.16	26.06	-0.13
277	SLU 42	34	-721	4197	50.11	25.96	-0.12
277	SLU 43	30	-653	3966	44.93	22.94	-0.11
277	SLU 44	30	-652	3963	44.84	22.77	-0.11
277	SLU 45	31	-673	4069	46.39	23.7	-0.11
277	SLU 46	31	-673	4067	46.34	23.6	-0.11
277	SLU 47	30	-667	4035	45.88	23.3	-0.11
277	SLU 48	31	-688	4141	47.43	24.22	-0.12
277	SLU 49	31	-688	4139	47.38	24.12	-0.12
277	SLU 50	31	-682	4110	47	23.99	-0.12
277	SLU 51	31	-682	4108	46.95	23.89	-0.12
277	SLU 52	33	-729	4365	50.28	25.71	-0.12
277	SLU 53	34	-750	4471	51.82	26.64	-0.13
277	SLU 54	34	-749	4469	51.77	26.54	-0.13
277	SLU 55	34	-743	4437	51.31	26.23	-0.13
277	SLU 56	35	-765	4543	52.86	27.16	-0.13
277	SLU 57	35	-764	4541	52.81	27.06	-0.13
277	SLU 58	35	-759	4512	52.44	26.92	-0.13
277	SLU 59	35	-758	4510	52.39	26.82	-0.13
277	SLU 60	35	-762	4540	52.69	27.13	-0.13
277	SLU 61	35	-762	4538	52.64	27.03	-0.13
277	SLU 62	36	-777	4612	53.73	27.66	-0.13
277	SLU 63	36	-776	4611	53.68	27.56	-0.13
277	SLU 64	34	-729	4363	50.31	25.86	-0.12
277	SLU 65	33	-728	4360	50.22	25.69	-0.12
277	SLU 66	34	-749	4466	51.77	26.62	-0.13
277	SLU 67	34	-749	4464	51.72	26.52	-0.13
277	SLU 68	34	-742	4432	51.26	26.22	-0.13
277	SLU 69	35	-764	4538	52.81	27.15	-0.13
277	SLU 70	35	-763	4536	52.76	27.05	-0.13
277	SLU 71	35	-758	4507	52.38	26.91	-0.13
277	SLU 72	35	-757	4505	52.33	26.81	-0.13
277	SLU 73	37	-804	4762	55.65	28.63	-0.14
277	SLU 74	38	-826	4868	57.2	29.56	-0.14
277	SLU 75	38	-825	4866	57.15	29.46	-0.14
277	SLU 76	38	-819	4834	56.69	29.16	-0.14
277	SLU 77	39	-840	4940	58.24	30.08	-0.14
277	SLU 78	39	-840	4938	58.19	29.98	-0.14
277	SLU 79	39	-834	4909	57.82	29.84	-0.14
277	SLU 80	38	-834	4907	57.77	29.75	-0.14
277	SLU 81	39	-838	4937	58.07	30.05	-0.14
277	SLU 82	39	-837	4936	58.02	29.96	-0.14
277	SLU 83	40	-852	5009	59.11	30.58	-0.15
277	SLU 84	39	-852	5008	59.06	30.48	-0.15
277	SLE RA 1	25	-544	3269	37.52	19.25	-0.09
277	SLE RA 2	25	-543	3267	37.46	19.14	-0.09
277	SLE RA 3	26	-557	3337	38.49	19.76	-0.1
277	SLE RA 4	26	-557	3336	38.46	19.69	-0.09
277	SLE RA 5	25	-553	3315	38.15	19.49	-0.09
277	SLE RA 6	26	-567	3385	39.18	20.11	-0.1
277	SLE RA 7	26	-567	3384	39.15	20.04	-0.1
277	SLE RA 8	26	-563	3365	38.9	19.95	-0.1
277	SLE RA 9	26	-563	3364	38.87	19.88	-0.1
277	SLE RA 10	27	-594	3535	41.08	21.1	-0.1
277	SLE RA 11	28	-608	3605	42.11	21.72	-0.1
277	SLE RA 12	28	-608	3604	42.08	21.65	-0.1
277	SLE RA 13	28	-604	3583	41.77	21.45	-0.1
277	SLE RA 14	29	-618	3653	42.81	22.06	-0.11
277	SLE RA 15	28	-618	3652	42.77	22	-0.11
277	SLE RA 16	28	-614	3633	42.52	21.91	-0.11
277	SLE RA 17	28	-614	3632	42.49	21.84	-0.11

Nodo	Cont.	Reazione a traslazione			Reazione a rotazione		
Ind.	N.br.	x	y	z	x	y	z
277	SLE RA 18	29	-617	3651	42.69	22.05	-0.11
277	SLE RA 19	28	-616	3651	42.66	21.98	-0.11
277	SLE RA 20	29	-626	3699	43.38	22.4	-0.11
277	SLE RA 21	29	-626	3699	43.35	22.33	-0.11
277	SLE FR 1	25	-544	3269	37.52	19.25	-0.09
277	SLE FR 2	25	-544	3268	37.5	19.23	-0.09
277	SLE FR 3	25	-548	3288	37.79	19.39	-0.09
277	SLE FR 4	26	-566	3383	39.06	20.07	-0.1
277	SLE FR 5	26	-570	3403	39.34	20.23	-0.1
277	SLE FR 6	27	-580	3460	40.1	20.65	-0.1
277	SLE QP 1	25	-544	3269	37.52	19.25	-0.09
277	SLE QP 2	26	-566	3383	39.07	20.09	-0.1
277	SLD 1	35	-606	3509	41.57	27.51	-0.13
277	SLD 2	35	-606	3509	41.57	27.51	-0.13
277	SLD 3	38	-963	4534	62.1	29.85	-0.12
277	SLD 4	38	-963	4534	62.1	29.85	-0.12
277	SLD 5	24	-35	1866	8.69	18.76	-0.12
277	SLD 6	24	-35	1866	8.69	18.76	-0.12
277	SLD 7	34	-1228	5284	77.11	26.57	-0.09
277	SLD 8	34	-1228	5284	77.11	26.57	-0.09
277	SLD 9	18	97	1483	1.03	13.61	-0.1
277	SLD 10	18	97	1483	1.03	13.61	-0.1
277	SLD 11	28	-1096	4901	69.45	21.41	-0.07
277	SLD 12	28	-1096	4901	69.45	21.41	-0.07
277	SLD 13	14	-168	2233	16.04	10.33	-0.07
277	SLD 14	14	-168	2233	16.04	10.33	-0.07
277	SLD 15	17	-526	3258	36.56	12.67	-0.06
277	SLD 16	17	-526	3258	36.56	12.67	-0.06
277	SLV 1	47	-653	3664	44.62	37.4	-0.19
277	SLV 2	47	-653	3664	44.62	37.4	-0.19
277	SLV 3	53	-1509	6109	93.68	43.18	-0.16
277	SLV 4	53	-1509	6109	93.68	43.18	-0.16
277	SLV 5	22	706	-240	-33.67	16.52	-0.16
277	SLV 6	22	706	-240	-33.67	16.52	-0.16
277	SLV 7	45	-2147	7909	129.86	35.78	-0.08
277	SLV 8	45	-2147	7909	129.86	35.78	-0.08
277	SLV 9	8	1015	-1142	-51.72	4.4	-0.12
277	SLV 10	8	1015	-1142	-51.72	4.4	-0.12
277	SLV 11	30	-1837	7007	111.81	23.66	-0.03
277	SLV 12	30	-1837	7007	111.81	23.66	-0.03
277	SLV 13	-1	378	658	-15.54	-3	-0.03
277	SLV 14	-1	378	658	-15.54	-3	-0.03
277	SLV 15	6	-478	3103	33.52	2.78	-0.01
277	SLV 16	6	-478	3103	33.52	2.78	-0.01
278	SLU 1	0	-366	4235	27.55	-0.16	0
278	SLU 2	0	-367	4219	27.54	-0.14	0
278	SLU 3	0	-386	4360	28.83	-0.17	0
278	SLU 4	0	-386	4350	28.83	-0.16	0
278	SLU 5	0	-382	4292	28.46	-0.15	0
278	SLU 6	0	-401	4433	29.75	-0.18	0
278	SLU 7	0	-401	4423	29.74	-0.17	0
278	SLU 8	0	-397	4381	29.38	-0.18	0
278	SLU 9	0	-397	4371	29.38	-0.17	0
278	SLU 10	0	-435	4817	32.52	-0.15	0
278	SLU 11	0	-454	4958	33.81	-0.18	0
278	SLU 12	0	-454	4948	33.8	-0.17	0
278	SLU 13	0	-450	4890	33.43	-0.16	0
278	SLU 14	0	-469	5031	34.73	-0.19	0
278	SLU 15	0	-469	5021	34.72	-0.18	0
278	SLU 16	0	-464	4979	34.36	-0.19	0
278	SLU 17	0	-465	4969	34.36	-0.18	0
278	SLU 18	0	-464	5089	34.66	-0.17	0
278	SLU 19	0	-464	5080	34.65	-0.16	0
278	SLU 20	0	-479	5162	35.58	-0.18	0
278	SLU 21	0	-479	5153	35.57	-0.17	0
278	SLU 22	0	-434	4815	32.4	-0.17	0
278	SLU 23	0	-434	4799	32.39	-0.16	0
278	SLU 24	0	-453	4940	33.68	-0.19	0
278	SLU 25	0	-453	4930	33.68	-0.18	0
278	SLU 26	0	-449	4872	33.31	-0.17	0
278	SLU 27	0	-468	5013	34.6	-0.2	0
278	SLU 28	0	-468	5003	34.6	-0.19	0
278	SLU 29	0	-464	4961	34.24	-0.2	0
278	SLU 30	0	-464	4951	34.23	-0.19	0
278	SLU 31	0	-502	5397	37.37	-0.17	0
278	SLU 32	0	-521	5538	38.66	-0.19	0
278	SLU 33	0	-521	5529	38.66	-0.18	0
278	SLU 34	0	-517	5470	38.29	-0.18	0
278	SLU 35	0	-536	5611	39.58	-0.2	0
278	SLU 36	0	-536	5601	39.57	-0.19	0
278	SLU 37	0	-532	5559	39.21	-0.2	0
278	SLU 38	0	-532	5549	39.21	-0.19	0
278	SLU 39	0	-531	5670	39.51	-0.19	0
278	SLU 40	0	-531	5660	39.5	-0.18	0
278	SLU 41	0	-546	5742	40.43	-0.2	0
278	SLU 42	0	-546	5733	40.42	-0.19	0
278	SLU 43	0	-453	5306	34.15	-0.2	0
278	SLU 44	0	-454	5290	34.14	-0.19	0
278	SLU 45	0	-473	5431	35.43	-0.21	0
278	SLU 46	0	-473	5422	35.43	-0.2	0

Nodo	Cont.	Reazione a traslazione			Reazione a rotazione		
Ind.	N.br.	x	y	z	x	y	z
278	SLU 47	0	-469	5363	35.06	-0.2	0
278	SLU 48	0	-488	5504	36.35	-0.22	0
278	SLU 49	0	-488	5495	36.35	-0.21	0
278	SLU 50	0	-483	5452	35.99	-0.22	0
278	SLU 51	0	-484	5443	35.98	-0.21	0
278	SLU 52	0	-522	5888	39.12	-0.19	0
278	SLU 53	0	-541	6029	40.41	-0.22	0
278	SLU 54	0	-541	6020	40.41	-0.21	0
278	SLU 55	0	-537	5961	40.04	-0.2	0
278	SLU 56	0	-556	6102	41.33	-0.23	0
278	SLU 57	0	-556	6093	41.32	-0.22	0
278	SLU 58	0	-551	6050	40.96	-0.23	0
278	SLU 59	0	-552	6041	40.96	-0.22	0
278	SLU 60	0	-550	6161	41.26	-0.21	0
278	SLU 61	0	-551	6151	41.25	-0.2	0
278	SLU 62	0	-565	6234	42.18	-0.22	0
278	SLU 63	0	-566	6224	42.17	-0.21	0
278	SLU 64	0	-521	5887	39	-0.22	0
278	SLU 65	0	-521	5871	38.99	-0.2	0
278	SLU 66	0	-540	6012	40.29	-0.23	0
278	SLU 67	0	-540	6002	40.28	-0.22	0
278	SLU 68	0	-536	5943	39.91	-0.21	0
278	SLU 69	0	-555	6084	41.2	-0.24	0
278	SLU 70	0	-555	6075	41.2	-0.23	0
278	SLU 71	0	-551	6032	40.84	-0.24	0
278	SLU 72	0	-551	6023	40.83	-0.23	0
278	SLU 73	0	-589	6469	43.97	-0.21	0
278	SLU 74	0	-608	6610	45.26	-0.24	0
278	SLU 75	0	-608	6600	45.26	-0.23	0
278	SLU 76	0	-604	6542	44.89	-0.22	0
278	SLU 77	0	-623	6683	46.18	-0.25	0
278	SLU 78	0	-623	6673	46.17	-0.24	0
278	SLU 79	0	-619	6631	45.81	-0.25	0
278	SLU 80	0	-619	6621	45.81	-0.24	0
278	SLU 81	0	-618	6741	46.11	-0.23	0
278	SLU 82	0	-618	6731	46.11	-0.22	0
278	SLU 83	0	-633	6814	47.03	-0.24	0
278	SLU 84	0	-633	6804	47.02	-0.23	0
278	SLE RA 1	0	-386	4401	28.93	-0.16	0
278	SLE RA 2	0	-386	4390	28.93	-0.15	0
278	SLE RA 3	0	-399	4484	29.79	-0.17	0
278	SLE RA 4	0	-399	4477	29.79	-0.16	0
278	SLE RA 5	0	-396	4439	29.54	-0.16	0
278	SLE RA 6	0	-409	4533	30.4	-0.18	0
278	SLE RA 7	0	-409	4526	30.4	-0.17	0
278	SLE RA 8	0	-406	4498	30.16	-0.18	0
278	SLE RA 9	0	-406	4491	30.15	-0.17	0
278	SLE RA 10	0	-431	4789	32.25	-0.16	0
278	SLE RA 11	0	-444	4883	33.11	-0.18	0
278	SLE RA 12	0	-444	4876	33.1	-0.17	0
278	SLE RA 13	0	-441	4837	32.86	-0.16	0
278	SLE RA 14	0	-454	4931	33.72	-0.18	0
278	SLE RA 15	0	-454	4925	33.72	-0.18	0
278	SLE RA 16	0	-451	4897	33.48	-0.18	0
278	SLE RA 17	0	-451	4890	33.47	-0.18	0
278	SLE RA 18	0	-450	4970	33.68	-0.17	0
278	SLE RA 19	0	-450	4964	33.67	-0.16	0
278	SLE RA 20	0	-460	5019	34.29	-0.18	0
278	SLE RA 21	0	-460	5012	34.28	-0.17	0
278	SLE FR 1	0	-386	4401	28.93	-0.16	0
278	SLE FR 2	0	-386	4398	28.93	-0.16	0
278	SLE FR 3	0	-390	4420	29.18	-0.17	0
278	SLE FR 4	0	-405	4569	30.36	-0.16	0
278	SLE FR 5	0	-409	4591	30.6	-0.17	0
278	SLE FR 6	0	-418	4685	31.31	-0.17	0
278	SLE QP 1	0	-386	4401	28.93	-0.16	0
278	SLE QP 2	0	-405	4571	30.36	-0.17	0
278	SLD 1	10	-19	4753	9.83	9.82	-0.02
278	SLD 2	10	-19	4753	9.83	9.82	-0.02
278	SLD 3	8	-424	5062	30.18	8.07	-0.02
278	SLD 4	8	-424	5062	30.18	8.07	-0.02
278	SLD 5	5	325	4158	-6.66	5.48	-0.01
278	SLD 6	5	325	4158	-6.66	5.48	-0.01
278	SLD 7	-1	-1025	5187	61.16	-0.34	0
278	SLD 8	-1	-1025	5187	61.16	-0.34	0
278	SLD 9	0	215	3956	-0.45	0.01	0
278	SLD 10	0	215	3956	-0.45	0.01	0
278	SLD 11	-6	-1135	4985	67.37	-5.81	0.01
278	SLD 12	-6	-1135	4985	67.37	-5.81	0.01
278	SLD 13	-8	-386	4081	30.54	-8.4	0.02
278	SLD 14	-8	-386	4081	30.54	-8.4	0.02
278	SLD 15	-10	-791	4390	50.88	-10.15	0.02
278	SLD 16	-10	-791	4390	50.88	-10.15	0.02
278	SLV 1	23	512	4996	-18.32	24.64	-0.05
278	SLV 2	23	512	4996	-18.32	24.64	-0.05
278	SLV 3	19	-455	5728	30.21	20.19	-0.04
278	SLV 4	19	-455	5728	30.21	20.19	-0.04
278	SLV 5	14	1337	3589	-57.84	14.03	-0.03
278	SLV 6	14	1337	3589	-57.84	14.03	-0.03
278	SLV 7	-1	-1887	6028	103.91	-0.81	0

Nodo	Cont.	Reazione a traslazione			Reazione a rotazione		
Ind.	N.br.	x	y	z	x	y	z
278	SLV 8	-1	-1887	6028	103.91	-0.81	0
278	SLV 9	1	1077	3114	-43.19	0.48	0
278	SLV 10	1	1077	3114	-43.19	0.48	0
278	SLV 11	-14	-2147	5554	118.55	-14.36	0.03
278	SLV 12	-14	-2147	5554	118.55	-14.36	0.03
278	SLV 13	-19	-355	3415	30.51	-20.52	0.04
278	SLV 14	-19	-355	3415	30.51	-20.52	0.04
278	SLV 15	-24	-1322	4147	79.03	-24.98	0.05
278	SLV 16	-24	-1322	4147	79.03	-24.98	0.05
279	SLU 1	2	-131	4161	6.06	1.19	0
279	SLU 2	2	-129	4158	5.98	1.19	0
279	SLU 3	2	-137	4296	6.32	1.23	0
279	SLU 4	2	-136	4294	6.28	1.23	0
279	SLU 5	2	-133	4245	6.13	1.22	0
279	SLU 6	2	-141	4383	6.47	1.26	0
279	SLU 7	2	-140	4381	6.43	1.26	0
279	SLU 8	2	-138	4334	6.36	1.24	0
279	SLU 9	2	-137	4333	6.31	1.24	0
279	SLU 10	2	-161	4765	7.4	1.36	0
279	SLU 11	2	-169	4903	7.74	1.4	0
279	SLU 12	2	-168	4901	7.69	1.4	0
279	SLU 13	2	-165	4852	7.54	1.38	0
279	SLU 14	2	-173	4990	7.88	1.42	0
279	SLU 15	2	-172	4988	7.84	1.43	0
279	SLU 16	2	-170	4941	7.77	1.41	0
279	SLU 17	2	-169	4940	7.72	1.41	0
279	SLU 18	2	-177	5028	8.08	1.43	0
279	SLU 19	2	-176	5026	8.03	1.43	0
279	SLU 20	2	-180	5115	8.23	1.45	0
279	SLU 21	2	-179	5113	8.18	1.45	0
279	SLU 22	2	-160	4742	7.33	1.36	0
279	SLU 23	2	-158	4739	7.25	1.36	0
279	SLU 24	2	-166	4877	7.59	1.4	0
279	SLU 25	2	-165	4875	7.54	1.4	0
279	SLU 26	2	-161	4826	7.4	1.39	0
279	SLU 27	2	-169	4964	7.74	1.43	0
279	SLU 28	2	-168	4962	7.69	1.43	0
279	SLU 29	2	-167	4916	7.63	1.41	0
279	SLU 30	2	-166	4914	7.58	1.41	0
279	SLU 31	3	-190	5346	8.66	1.53	0
279	SLU 32	3	-198	5484	9	1.57	0
279	SLU 33	3	-197	5482	8.95	1.57	0
279	SLU 34	3	-194	5433	8.81	1.55	0
279	SLU 35	3	-202	5571	9.15	1.59	0
279	SLU 36	3	-200	5569	9.1	1.59	0
279	SLU 37	3	-199	5523	9.04	1.58	0
279	SLU 38	3	-198	5521	8.99	1.58	0
279	SLU 39	3	-205	5609	9.34	1.6	0
279	SLU 40	3	-204	5607	9.3	1.6	0
279	SLU 41	3	-209	5696	9.49	1.62	0
279	SLU 42	3	-208	5694	9.45	1.62	0
279	SLU 43	2	-160	5209	7.45	1.49	0
279	SLU 44	2	-158	5207	7.37	1.49	0
279	SLU 45	3	-166	5344	7.71	1.53	0
279	SLU 46	3	-165	5343	7.66	1.53	0
279	SLU 47	3	-162	5294	7.52	1.52	0
279	SLU 48	3	-170	5431	7.86	1.56	0
279	SLU 49	3	-169	5430	7.81	1.56	0
279	SLU 50	3	-168	5383	7.74	1.54	0
279	SLU 51	3	-167	5382	7.7	1.54	0
279	SLU 52	3	-191	5814	8.78	1.66	0
279	SLU 53	3	-199	5951	9.12	1.7	0
279	SLU 54	3	-197	5950	9.07	1.7	0
279	SLU 55	3	-194	5901	8.93	1.68	0
279	SLU 56	3	-202	6038	9.27	1.72	0
279	SLU 57	3	-201	6037	9.22	1.72	0
279	SLU 58	3	-200	5990	9.16	1.71	0
279	SLU 59	3	-199	5989	9.11	1.71	0
279	SLU 60	3	-206	6077	9.46	1.73	0
279	SLU 61	3	-205	6075	9.42	1.73	0
279	SLU 62	3	-210	6164	9.61	1.75	0
279	SLU 63	3	-209	6162	9.57	1.75	0
279	SLU 64	3	-189	5791	8.71	1.66	0
279	SLU 65	3	-187	5788	8.63	1.66	0
279	SLU 66	3	-195	5926	8.97	1.7	0
279	SLU 67	3	-194	5924	8.93	1.7	0
279	SLU 68	3	-191	5875	8.78	1.69	0
279	SLU 69	3	-199	6013	9.12	1.73	0
279	SLU 70	3	-198	6011	9.08	1.73	0
279	SLU 71	3	-196	5965	9.01	1.71	0
279	SLU 72	3	-195	5963	8.96	1.71	0
279	SLU 73	3	-219	6395	10.05	1.83	0
279	SLU 74	3	-227	6533	10.39	1.87	0
279	SLU 75	3	-226	6531	10.34	1.87	0
279	SLU 76	3	-223	6482	10.19	1.85	0
279	SLU 77	3	-231	6620	10.53	1.89	0
279	SLU 78	3	-230	6618	10.49	1.89	0
279	SLU 79	3	-228	6572	10.42	1.87	0
279	SLU 80	3	-227	6570	10.37	1.88	0
279	SLU 81	3	-235	6658	10.73	1.89	0

Nodo	Cont.	Reazione a traslazione			Reazione a rotazione		
Ind.	N.br.	x	y	z	x	y	z
279	SLU 82	3	-234	6656	10.68	1.9	0
279	SLU 83	3	-238	6745	10.88	1.92	0
279	SLU 84	3	-237	6743	10.83	1.92	0
279	SLE RA 1	2	-139	4327	6.42	1.24	0
279	SLE RA 2	2	-138	4325	6.37	1.24	0
279	SLE RA 3	2	-143	4417	6.6	1.27	0
279	SLE RA 4	2	-142	4416	6.57	1.27	0
279	SLE RA 5	2	-140	4383	6.47	1.26	0
279	SLE RA 6	2	-146	4475	6.7	1.28	0
279	SLE RA 7	2	-145	4474	6.67	1.28	0
279	SLE RA 8	2	-144	4443	6.62	1.27	0
279	SLE RA 9	2	-143	4442	6.59	1.27	0
279	SLE RA 10	2	-159	4730	7.31	1.35	0
279	SLE RA 11	2	-165	4821	7.54	1.38	0
279	SLE RA 12	2	-164	4820	7.51	1.38	0
279	SLE RA 13	2	-162	4788	7.41	1.37	0
279	SLE RA 14	2	-167	4879	7.64	1.39	0
279	SLE RA 15	2	-166	4878	7.61	1.4	0
279	SLE RA 16	2	-165	4847	7.56	1.38	0
279	SLE RA 17	2	-165	4846	7.53	1.38	0
279	SLE RA 18	2	-170	4905	7.77	1.4	0
279	SLE RA 19	2	-169	4904	7.74	1.4	0
279	SLE RA 20	2	-172	4963	7.87	1.41	0
279	SLE RA 21	2	-171	4962	7.84	1.41	0
279	SLE FR 1	2	-139	4327	6.42	1.24	0
279	SLE FR 2	2	-139	4326	6.41	1.24	0
279	SLE FR 3	2	-140	4350	6.46	1.24	0
279	SLE FR 4	2	-148	4500	6.82	1.29	0
279	SLE FR 5	2	-149	4523	6.87	1.29	0
279	SLE FR 6	2	-154	4616	7.1	1.32	0
279	SLE QP 1	2	-139	4327	6.42	1.24	0
279	SLE QP 2	2	-148	4500	6.83	1.28	0
279	SLD 1	10	206	4033	-10.17	6.04	0
279	SLD 2	10	206	4033	-10.17	6.04	0
279	SLD 3	5	-325	4196	15.64	3.23	-0.01
279	SLD 4	5	-325	4196	15.64	3.23	-0.01
279	SLD 5	11	764	4114	-37.42	6.97	0
279	SLD 6	11	764	4114	-37.42	6.97	0
279	SLD 7	-4	-1008	4655	48.62	-2.39	-0.01
279	SLD 8	-4	-1008	4655	48.62	-2.39	-0.01
279	SLD 9	8	711	4345	-34.97	4.96	0.01
279	SLD 10	8	711	4345	-34.97	4.96	0.01
279	SLD 11	-7	-1061	4886	51.08	-4.4	-0.01
279	SLD 12	-7	-1061	4886	51.08	-4.4	-0.01
279	SLD 13	-1	29	4805	-1.99	-0.66	0.01
279	SLD 14	-1	29	4805	-1.99	-0.66	0.01
279	SLD 15	-5	-503	4967	23.82	-3.47	0
279	SLD 16	-5	-503	4967	23.82	-3.47	0
279	SLV 1	20	702	3405	-33.98	12.72	-0.01
279	SLV 2	20	702	3405	-33.98	12.72	-0.01
279	SLV 3	9	-571	3792	27.87	5.59	-0.02
279	SLV 4	9	-571	3792	27.87	5.59	-0.02
279	SLV 5	24	2038	3585	-99.22	15.54	0.01
279	SLV 6	24	2038	3585	-99.22	15.54	0.01
279	SLV 7	-13	-2206	4874	106.94	-8.25	-0.02
279	SLV 8	-13	-2206	4874	106.94	-8.25	-0.02
279	SLV 9	17	1910	4126	-93.29	10.82	0.02
279	SLV 10	17	1910	4126	-93.29	10.82	0.02
279	SLV 11	-20	-2335	5415	112.87	-12.97	-0.01
279	SLV 12	-20	-2335	5415	112.87	-12.97	-0.01
279	SLV 13	-5	275	5208	-14.21	-3.02	0.01
279	SLV 14	-5	275	5208	-14.21	-3.02	0.01
279	SLV 15	-16	-999	5595	47.63	-10.15	0.01
279	SLV 16	-16	-999	5595	47.63	-10.15	0.01
280	SLU 1	33	-1003	6046	45.38	25.67	0.43
280	SLU 2	33	-916	5903	42.15	25.47	0.43
280	SLU 3	35	-1042	6260	47.25	26.72	0.45
280	SLU 4	34	-990	6174	45.32	26.6	0.45
280	SLU 5	34	-944	6068	43.55	26.26	0.44
280	SLU 6	36	-1071	6426	48.65	27.51	0.47
280	SLU 7	35	-1019	6340	46.71	27.39	0.46
280	SLU 8	35	-1060	6377	48.18	27.26	0.46
280	SLU 9	35	-1008	6291	46.24	27.13	0.46
280	SLU 10	37	-1034	6578	47.57	28.72	0.48
280	SLU 11	39	-1161	6935	52.67	29.97	0.51
280	SLU 12	38	-1109	6850	50.73	29.85	0.5
280	SLU 13	38	-1063	6743	48.97	29.51	0.49
280	SLU 14	40	-1190	7101	54.06	30.76	0.52
280	SLU 15	39	-1137	7015	52.13	30.64	0.52
280	SLU 16	39	-1179	7052	53.59	30.51	0.52
280	SLU 17	39	-1126	6966	51.66	30.39	0.51
280	SLU 18	39	-1173	7010	53.11	30.32	0.51
280	SLU 19	39	-1120	6925	51.18	30.19	0.51
280	SLU 20	40	-1201	7176	54.51	31.11	0.53
280	SLU 21	40	-1149	7090	52.58	30.99	0.52
280	SLU 22	38	-1126	6732	51.02	28.99	0.49
280	SLU 23	37	-1039	6589	47.79	28.79	0.48
280	SLU 24	39	-1166	6947	52.89	30.04	0.51
280	SLU 25	39	-1113	6861	50.96	29.92	0.5
280	SLU 26	38	-1067	6755	49.19	29.58	0.5

Nodo	Cont.	Reazione a traslazione			Reazione a rotazione		
Ind.	N.br.	x	y	z	x	y	z
280	SLU 27	40	-1194	7112	54.29	30.83	0.52
280	SLU 28	40	-1142	7026	52.36	30.71	0.52
280	SLU 29	40	-1183	7064	53.82	30.58	0.52
280	SLU 30	39	-1131	6978	51.88	30.46	0.51
280	SLU 31	41	-1158	7264	53.21	32.04	0.54
280	SLU 32	43	-1284	7622	58.31	33.29	0.56
280	SLU 33	43	-1232	7536	56.37	33.17	0.56
280	SLU 34	42	-1186	7430	54.61	32.83	0.55
280	SLU 35	44	-1313	7788	59.71	34.09	0.58
280	SLU 36	44	-1260	7702	57.77	33.96	0.57
280	SLU 37	44	-1302	7739	59.23	33.83	0.57
280	SLU 38	43	-1249	7653	57.3	33.71	0.57
280	SLU 39	43	-1296	7697	58.76	33.64	0.57
280	SLU 40	43	-1243	7611	56.82	33.52	0.56
280	SLU 41	44	-1324	7863	60.15	34.43	0.58
280	SLU 42	44	-1272	7777	58.22	34.31	0.58
280	SLU 43	42	-1262	7624	57.06	32.23	0.55
280	SLU 44	41	-1174	7481	53.83	32.03	0.54
280	SLU 45	43	-1301	7839	58.93	33.28	0.56
280	SLU 46	43	-1249	7753	57	33.16	0.56
280	SLU 47	42	-1203	7647	55.23	32.82	0.55
280	SLU 48	44	-1330	8004	60.33	34.07	0.58
280	SLU 49	44	-1277	7918	58.39	33.95	0.57
280	SLU 50	44	-1319	7955	59.86	33.82	0.57
280	SLU 51	44	-1266	7869	57.92	33.7	0.57
280	SLU 52	45	-1293	8156	59.25	35.28	0.59
280	SLU 53	47	-1420	8514	64.35	36.53	0.62
280	SLU 54	47	-1367	8428	62.41	36.41	0.61
280	SLU 55	46	-1322	8322	60.65	36.07	0.61
280	SLU 56	48	-1448	8679	65.74	37.33	0.63
280	SLU 57	48	-1396	8593	63.81	37.2	0.63
280	SLU 58	48	-1437	8631	65.27	37.07	0.63
280	SLU 59	48	-1385	8545	63.34	36.95	0.62
280	SLU 60	48	-1431	8589	64.79	36.88	0.62
280	SLU 61	47	-1379	8503	62.86	36.76	0.62
280	SLU 62	49	-1460	8754	66.19	37.67	0.64
280	SLU 63	48	-1407	8668	64.26	37.55	0.63
280	SLU 64	46	-1385	8311	62.7	35.56	0.6
280	SLU 65	45	-1297	8168	59.47	35.35	0.59
280	SLU 66	47	-1424	8525	64.57	36.6	0.62
280	SLU 67	47	-1372	8439	62.64	36.48	0.62
280	SLU 68	46	-1326	8333	60.87	36.14	0.61
280	SLU 69	48	-1453	8691	65.97	37.4	0.63
280	SLU 70	48	-1400	8605	64.04	37.27	0.63
280	SLU 71	48	-1442	8642	65.5	37.14	0.63
280	SLU 72	48	-1389	8556	63.56	37.02	0.62
280	SLU 73	50	-1416	8843	64.89	38.6	0.65
280	SLU 74	52	-1543	9200	69.99	39.86	0.67
280	SLU 75	51	-1491	9114	68.05	39.73	0.67
280	SLU 76	51	-1445	9008	66.29	39.4	0.66
280	SLU 77	53	-1571	9366	71.39	40.65	0.69
280	SLU 78	52	-1519	9280	69.45	40.53	0.68
280	SLU 79	52	-1560	9317	70.91	40.39	0.68
280	SLU 80	52	-1508	9231	68.98	40.27	0.68
280	SLU 81	52	-1554	9275	70.44	40.2	0.68
280	SLU 82	52	-1502	9189	68.5	40.08	0.67
280	SLU 83	53	-1583	9441	71.83	40.99	0.69
280	SLU 84	53	-1530	9355	69.9	40.87	0.69
280	SLE RA 1	34	-1038	6242	46.99	26.62	0.45
280	SLE RA 2	34	-980	6147	44.84	26.48	0.45
280	SLE RA 3	35	-1064	6385	48.24	27.32	0.46
280	SLE RA 4	35	-1030	6328	46.95	27.24	0.46
280	SLE RA 5	35	-999	6257	45.77	27.01	0.45
280	SLE RA 6	36	-1083	6495	49.17	27.85	0.47
280	SLE RA 7	36	-1049	6438	47.88	27.77	0.47
280	SLE RA 8	36	-1076	6463	48.86	27.68	0.47
280	SLE RA 9	36	-1041	6406	47.57	27.6	0.47
280	SLE RA 10	37	-1059	6597	48.45	28.65	0.48
280	SLE RA 11	38	-1144	6835	51.85	29.49	0.5
280	SLE RA 12	38	-1109	6778	50.56	29.41	0.5
280	SLE RA 13	38	-1078	6707	49.38	29.18	0.49
280	SLE RA 14	39	-1163	6945	52.78	30.02	0.51
280	SLE RA 15	39	-1128	6888	51.49	29.93	0.5
280	SLE RA 16	39	-1155	6913	52.47	29.84	0.5
280	SLE RA 17	38	-1120	6856	51.18	29.76	0.5
280	SLE RA 18	38	-1151	6885	52.15	29.72	0.5
280	SLE RA 19	38	-1116	6828	50.86	29.64	0.5
280	SLE RA 20	39	-1170	6995	53.08	30.25	0.51
280	SLE RA 21	39	-1135	6938	51.79	30.16	0.51
280	SLE FR 1	34	-1038	6242	46.99	26.62	0.45
280	SLE FR 2	34	-1026	6223	46.56	26.59	0.45
280	SLE FR 3	35	-1046	6286	47.36	26.83	0.45
280	SLE FR 4	36	-1060	6416	48.11	27.52	0.46
280	SLE FR 5	36	-1080	6479	48.91	27.76	0.47
280	SLE FR 6	36	-1095	6564	49.57	28.17	0.48
280	SLE QP 1	34	-1038	6242	46.99	26.62	0.45
280	SLE QP 2	36	-1072	6435	48.54	27.55	0.47
280	SLD 1	59	-1099	7777	51.84	48.07	0.77
280	SLD 2	59	-1099	7777	51.84	48.07	0.77
280	SLD 3	72	-1458	8430	64.5	58.29	0.94

Nodo	Cont.	Reazione a traslazione			Reazione a rotazione		
Ind.	N.br.	x	y	z	x	y	z
280	SLD 4	72	-1458	8430	64.5	58.29	0.94
280	SLD 5	22	-535	5848	30.33	18.21	0.31
280	SLD 6	22	-535	5848	30.33	18.21	0.31
280	SLD 7	67	-1732	8024	72.53	52.27	0.86
280	SLD 8	67	-1732	8024	72.53	52.27	0.86
280	SLD 9	4	-412	4846	24.55	2.83	0.07
280	SLD 10	4	-412	4846	24.55	2.83	0.07
280	SLD 11	49	-1609	7022	66.75	36.89	0.63
280	SLD 12	49	-1609	7022	66.75	36.89	0.63
280	SLD 13	-1	-686	4440	32.57	-3.2	-0.01
280	SLD 14	-1	-686	4440	32.57	-3.2	-0.01
280	SLD 15	12	-1045	5092	45.23	7.02	0.16
280	SLD 16	12	-1045	5092	45.23	7.02	0.16
280	SLV 1	90	-1134	9573	56.2	75.23	1.18
280	SLV 2	90	-1134	9573	56.2	75.23	1.18
280	SLV 3	123	-1980	11122	86.1	100.28	1.58
280	SLV 4	123	-1980	11122	86.1	100.28	1.58
280	SLV 5	2	193	5027	5.48	3.86	0.06
280	SLV 6	2	193	5027	5.48	3.86	0.06
280	SLV 7	112	-2629	10190	105.16	87.36	1.42
280	SLV 8	112	-2629	10190	105.16	87.36	1.42
280	SLV 9	-40	484	2679	-8.09	-32.26	-0.49
280	SLV 10	-40	484	2679	-8.09	-32.26	-0.49
280	SLV 11	70	-2338	7843	91.6	51.23	0.87
280	SLV 12	70	-2338	7843	91.6	51.23	0.87
280	SLV 13	-51	-164	1748	10.97	-45.18	-0.65
280	SLV 14	-51	-164	1748	10.97	-45.18	-0.65
280	SLV 15	-18	-1010	3297	40.88	-20.13	-0.24
280	SLV 16	-18	-1010	3297	40.88	-20.13	-0.24
281	SLU 1	1	-888	5789	45.7	1.46	0
281	SLU 2	1	-799	5642	41.27	1.07	0
281	SLU 3	1	-915	6009	47.2	1.48	0
281	SLU 4	1	-862	5920	44.55	1.25	0
281	SLU 5	1	-814	5813	42.19	1.08	0
281	SLU 6	1	-931	6179	48.12	1.49	0
281	SLU 7	1	-877	6091	45.47	1.26	0
281	SLU 8	1	-919	6131	47.53	1.48	0
281	SLU 9	1	-865	6042	44.88	1.24	0
281	SLU 10	1	-913	6314	47.26	1.22	0
281	SLU 11	2	-1030	6681	53.19	1.63	0
281	SLU 12	1	-976	6593	50.53	1.4	0
281	SLU 13	1	-929	6485	48.17	1.23	0
281	SLU 14	2	-1045	6852	54.11	1.64	0
281	SLU 15	1	-992	6763	51.45	1.4	0
281	SLU 16	2	-1033	6803	53.52	1.62	0
281	SLU 17	1	-980	6715	50.86	1.39	0
281	SLU 18	2	-1051	6749	54.25	1.67	0
281	SLU 19	2	-998	6661	51.59	1.44	0
281	SLU 20	2	-1067	6920	55.16	1.68	0
281	SLU 21	2	-1014	6832	52.51	1.45	0
281	SLU 22	2	-1001	6463	51.64	1.6	0
281	SLU 23	1	-912	6316	47.21	1.21	0
281	SLU 24	2	-1029	6683	53.15	1.62	0
281	SLU 25	1	-975	6595	50.49	1.38	0
281	SLU 26	1	-928	6487	48.13	1.22	0
281	SLU 27	2	-1044	6854	54.06	1.63	0
281	SLU 28	1	-991	6765	51.41	1.39	0
281	SLU 29	2	-1032	6805	53.47	1.61	0
281	SLU 30	1	-979	6717	50.82	1.38	0
281	SLU 31	2	-1027	6988	53.2	1.36	0
281	SLU 32	2	-1143	7355	59.13	1.77	0
281	SLU 33	2	-1090	7267	56.48	1.53	0
281	SLU 34	2	-1043	7159	54.11	1.36	0
281	SLU 35	2	-1159	7526	60.05	1.77	0
281	SLU 36	2	-1106	7438	57.39	1.54	0
281	SLU 37	2	-1147	7477	59.46	1.76	0
281	SLU 38	2	-1094	7389	56.8	1.53	0
281	SLU 39	2	-1165	7424	60.19	1.81	0
281	SLU 40	2	-1112	7335	57.53	1.57	0
281	SLU 41	2	-1181	7595	61.11	1.82	0
281	SLU 42	2	-1127	7506	58.45	1.58	0
281	SLU 43	2	-1115	7295	57.37	1.85	0
281	SLU 44	2	-1026	7147	52.94	1.46	0
281	SLU 45	2	-1142	7514	58.88	1.87	0
281	SLU 46	2	-1089	7426	56.22	1.64	0
281	SLU 47	2	-1042	7318	53.86	1.47	0
281	SLU 48	2	-1158	7685	59.79	1.88	0
281	SLU 49	2	-1105	7597	57.14	1.65	0
281	SLU 50	2	-1146	7636	59.2	1.87	0
281	SLU 51	2	-1093	7548	56.55	1.64	0
281	SLU 52	2	-1141	7820	58.93	1.61	0
281	SLU 53	2	-1257	8186	64.86	2.02	0
281	SLU 54	2	-1204	8098	62.21	1.79	0
281	SLU 55	2	-1156	7991	59.84	1.62	0
281	SLU 56	2	-1273	8357	65.78	2.03	0
281	SLU 57	2	-1219	8269	63.12	1.79	0
281	SLU 58	2	-1261	8308	65.19	2.02	0
281	SLU 59	2	-1207	8220	62.53	1.78	0
281	SLU 60	2	-1279	8255	65.92	2.06	0
281	SLU 61	2	-1225	8167	63.26	1.83	0

Nodo	Cont.	Reazione a traslazione			Reazione a rotazione		
Ind.	N.br.	x	y	z	x	y	z
281	SLU 62	2	-1294	8426	66.84	2.07	0
281	SLU 63	2	-1241	8337	64.18	1.84	0
281	SLU 64	2	-1228	7969	63.31	1.99	0
281	SLU 65	2	-1140	7822	58.88	1.6	0
281	SLU 66	2	-1256	8188	64.82	2.01	0
281	SLU 67	2	-1203	8100	62.16	1.78	0
281	SLU 68	2	-1155	7993	59.8	1.61	0
281	SLU 69	2	-1272	8359	65.73	2.02	0
281	SLU 70	2	-1218	8271	63.08	1.78	0
281	SLU 71	2	-1260	8310	65.14	2.01	0
281	SLU 72	2	-1206	8222	62.49	1.77	0
281	SLU 73	2	-1254	8494	64.87	1.75	0
281	SLU 74	2	-1371	8861	70.8	2.16	0
281	SLU 75	2	-1317	8772	68.15	1.92	0
281	SLU 76	2	-1270	8665	65.79	1.76	0
281	SLU 77	2	-1386	9031	71.72	2.16	0
281	SLU 78	2	-1333	8943	69.06	1.93	0
281	SLU 79	2	-1374	8983	71.13	2.15	0
281	SLU 80	2	-1321	8894	68.47	1.92	0
281	SLU 81	2	-1392	8929	71.86	2.2	0
281	SLU 82	2	-1339	8841	69.2	1.97	0
281	SLU 83	2	-1408	9100	72.78	2.21	0
281	SLU 84	2	-1355	9012	70.12	1.97	0
281	SLE RA 1	1	-920	5982	47.39	1.5	0
281	SLE RA 2	1	-861	5884	44.44	1.24	0
281	SLE RA 3	1	-938	6128	48.4	1.51	0
281	SLE RA 4	1	-903	6069	46.63	1.36	0
281	SLE RA 5	1	-871	5997	45.05	1.25	0
281	SLE RA 6	1	-949	6242	49.01	1.52	0
281	SLE RA 7	1	-913	6183	47.24	1.36	0
281	SLE RA 8	1	-941	6209	48.62	1.51	0
281	SLE RA 9	1	-905	6151	46.85	1.36	0
281	SLE RA 10	1	-937	6332	48.43	1.34	0
281	SLE RA 11	2	-1015	6576	52.39	1.61	0
281	SLE RA 12	1	-979	6517	50.62	1.46	0
281	SLE RA 13	1	-948	6446	49.04	1.34	0
281	SLE RA 14	2	-1025	6690	53	1.62	0
281	SLE RA 15	1	-990	6631	51.23	1.46	0
281	SLE RA 16	2	-1017	6658	52.61	1.61	0
281	SLE RA 17	1	-982	6599	50.84	1.45	0
281	SLE RA 18	2	-1029	6622	53.09	1.64	0
281	SLE RA 19	2	-994	6563	51.32	1.48	0
281	SLE RA 20	2	-1040	6736	53.71	1.65	0
281	SLE RA 21	2	-1004	6677	51.94	1.49	0
281	SLE FR 1	1	-920	5982	47.39	1.5	0
281	SLE FR 2	1	-908	5962	46.8	1.45	0
281	SLE FR 3	1	-924	6027	47.64	1.5	0
281	SLE FR 4	1	-941	6154	48.51	1.49	0
281	SLE FR 5	1	-957	6219	49.35	1.54	0
281	SLE FR 6	1	-975	6302	50.24	1.57	0
281	SLE QP 1	1	-920	5982	47.39	1.5	0
281	SLE QP 2	1	-953	6174	49.1	1.54	0
281	SLD 1	9	-588	4078	30.01	12.18	-0.01
281	SLD 2	9	-588	4078	30.01	12.18	-0.01
281	SLD 3	20	-951	4785	47.98	20	-0.04
281	SLD 4	20	-951	4785	47.98	20	-0.04
281	SLD 5	-14	-294	4472	16.12	-7.13	0.04
281	SLD 6	-14	-294	4472	16.12	-7.13	0.04
281	SLD 7	25	-1502	6830	76.02	18.94	-0.05
281	SLD 8	25	-1502	6830	76.02	18.94	-0.05
281	SLD 9	-22	-404	5517	22.18	-15.86	0.05
281	SLD 10	-22	-404	5517	22.18	-15.86	0.05
281	SLD 11	17	-1612	7876	82.09	10.21	-0.04
281	SLD 12	17	-1612	7876	82.09	10.21	-0.04
281	SLD 13	-17	-955	7562	50.23	-16.92	0.04
281	SLD 14	-17	-955	7562	50.23	-16.92	0.04
281	SLD 15	-6	-1317	8270	68.2	-9.1	0.01
281	SLD 16	-6	-1317	8270	68.2	-9.1	0.01
281	SLV 1	18	-98	1256	4.29	26.77	-0.01
281	SLV 2	18	-98	1256	4.29	26.77	-0.01
281	SLV 3	48	-949	2930	46.51	46.54	-0.09
281	SLV 4	48	-949	2930	46.51	46.54	-0.09
281	SLV 5	-38	595	2160	-28.38	-20.87	0.11
281	SLV 6	-38	595	2160	-28.38	-20.87	0.11
281	SLV 7	60	-2243	7740	112.36	45.02	-0.14
281	SLV 8	60	-2243	7740	112.36	45.02	-0.14
281	SLV 9	-57	337	4608	-14.16	-41.94	0.14
281	SLV 10	-57	337	4608	-14.16	-41.94	0.14
281	SLV 11	41	-2500	10188	126.58	23.95	-0.11
281	SLV 12	41	-2500	10188	126.58	23.95	-0.11
281	SLV 13	-45	-957	9417	51.69	-43.46	0.09
281	SLV 14	-45	-957	9417	51.69	-43.46	0.09
281	SLV 15	-15	-1808	11091	93.91	-23.69	0.01
281	SLV 16	-15	-1808	11091	93.91	-23.69	0.01
282	SLU 1	10	-369	2765	35.8	6.61	0
282	SLU 2	10	-368	2762	35.74	6.6	0
282	SLU 3	11	-384	2847	37.21	6.86	0
282	SLU 4	11	-383	2846	37.18	6.85	0
282	SLU 5	10	-377	2815	36.66	6.76	0
282	SLU 6	11	-394	2900	38.13	7.02	0

Nodo	Cont.	Reazione a traslazione			Reazione a rotazione		
Ind.	N.br.	x	y	z	x	y	z
282	SLU 7	11	-393	2898	38.09	7.02	0
282	SLU 8	11	-388	2870	37.64	6.93	0
282	SLU 9	11	-387	2868	37.6	6.93	0
282	SLU 10	12	-432	3146	41.37	7.69	0
282	SLU 11	12	-449	3231	42.84	7.95	0
282	SLU 12	12	-448	3229	42.8	7.94	0
282	SLU 13	12	-441	3198	42.28	7.85	0
282	SLU 14	13	-458	3283	43.76	8.11	0
282	SLU 15	13	-457	3281	43.72	8.11	0
282	SLU 16	12	-452	3253	43.26	8.02	0
282	SLU 17	12	-451	3252	43.23	8.02	0
282	SLU 18	13	-461	3313	43.84	8.16	0
282	SLU 19	13	-460	3311	43.8	8.16	0
282	SLU 20	13	-471	3365	44.76	8.33	0
282	SLU 21	13	-470	3364	44.72	8.32	0
282	SLU 22	12	-431	3130	41.33	7.66	0
282	SLU 23	12	-430	3128	41.26	7.66	0
282	SLU 24	12	-446	3212	42.74	7.91	0
282	SLU 25	12	-445	3211	42.7	7.91	0
282	SLU 26	12	-439	3180	42.18	7.82	0
282	SLU 27	12	-456	3265	43.66	8.08	0
282	SLU 28	12	-455	3263	43.62	8.07	0
282	SLU 29	12	-450	3235	43.16	7.99	0
282	SLU 30	12	-449	3233	43.12	7.99	0
282	SLU 31	13	-494	3511	46.89	8.74	0
282	SLU 32	14	-510	3596	48.37	9	0
282	SLU 33	14	-510	3594	48.33	9	0
282	SLU 34	14	-503	3563	47.81	8.91	0
282	SLU 35	14	-520	3648	49.28	9.17	0
282	SLU 36	14	-519	3647	49.25	9.16	0
282	SLU 37	14	-514	3618	48.79	9.08	0
282	SLU 38	14	-513	3617	48.75	9.07	0
282	SLU 39	14	-523	3678	49.37	9.22	0
282	SLU 40	14	-522	3676	49.33	9.21	0
282	SLU 41	14	-532	3730	50.28	9.38	0
282	SLU 42	14	-531	3729	50.25	9.38	0
282	SLU 43	13	-459	3469	44.65	8.23	0
282	SLU 44	13	-458	3467	44.58	8.22	0
282	SLU 45	13	-474	3552	46.06	8.48	0
282	SLU 46	13	-473	3550	46.02	8.47	0
282	SLU 47	13	-467	3519	45.5	8.38	0
282	SLU 48	13	-483	3604	46.98	8.64	0
282	SLU 49	13	-482	3602	46.94	8.64	0
282	SLU 50	13	-478	3574	46.48	8.55	0
282	SLU 51	13	-477	3573	46.45	8.55	0
282	SLU 52	14	-522	3850	50.21	9.31	0
282	SLU 53	15	-538	3935	51.69	9.57	0
282	SLU 54	15	-537	3933	51.65	9.56	0
282	SLU 55	15	-531	3902	51.13	9.47	0
282	SLU 56	15	-548	3987	52.61	9.73	0
282	SLU 57	15	-547	3986	52.57	9.73	0
282	SLU 58	15	-542	3957	52.11	9.64	0
282	SLU 59	15	-541	3956	52.07	9.64	0
282	SLU 60	15	-551	4017	52.69	9.78	0
282	SLU 61	15	-550	4015	52.65	9.78	0
282	SLU 62	15	-560	4069	53.61	9.95	0
282	SLU 63	15	-559	4068	53.57	9.94	0
282	SLU 64	14	-521	3834	50.18	9.28	0
282	SLU 65	14	-519	3832	50.11	9.28	0
282	SLU 66	15	-536	3917	51.59	9.54	0
282	SLU 67	15	-535	3915	51.55	9.53	0
282	SLU 68	15	-529	3884	51.03	9.44	0
282	SLU 69	15	-545	3969	52.5	9.7	0
282	SLU 70	15	-544	3967	52.47	9.69	0
282	SLU 71	15	-540	3939	52.01	9.61	0
282	SLU 72	15	-539	3938	51.97	9.61	0
282	SLU 73	16	-584	4215	55.74	10.36	0
282	SLU 74	16	-600	4300	57.21	10.62	0
282	SLU 75	16	-599	4298	57.17	10.62	0
282	SLU 76	16	-593	4268	56.65	10.53	0
282	SLU 77	17	-609	4352	58.13	10.79	0
282	SLU 78	17	-609	4351	58.09	10.78	0
282	SLU 79	17	-604	4323	57.64	10.7	0
282	SLU 80	16	-603	4321	57.6	10.69	0
282	SLU 81	17	-613	4382	58.21	10.84	0
282	SLU 82	17	-612	4381	58.17	10.83	0
282	SLU 83	17	-622	4435	59.13	11	0
282	SLU 84	17	-621	4433	59.09	11	0
282	SLE RA 1	11	-387	2869	37.38	6.91	0
282	SLE RA 2	11	-386	2868	37.34	6.9	0
282	SLE RA 3	11	-397	2924	38.32	7.08	0
282	SLE RA 4	11	-396	2923	38.3	7.07	0
282	SLE RA 5	11	-392	2903	37.95	7.01	0
282	SLE RA 6	11	-403	2959	38.93	7.19	0
282	SLE RA 7	11	-403	2958	38.91	7.18	0
282	SLE RA 8	11	-400	2939	38.61	7.13	0
282	SLE RA 9	11	-399	2938	38.58	7.12	0
282	SLE RA 10	12	-429	3123	41.09	7.63	0
282	SLE RA 11	12	-440	3180	42.07	7.8	0
282	SLE RA 12	12	-439	3179	42.05	7.8	0

Nodo	Cont.	Reazione a traslazione			Reazione a rotazione		
Ind.	N.br.	x	y	z	x	y	z
282	SLE RA 13	12	-435	3158	41.7	7.74	0
282	SLE RA 14	12	-446	3215	42.69	7.91	0
282	SLE RA 15	12	-446	3214	42.66	7.91	0
282	SLE RA 16	12	-442	3195	42.36	7.85	0
282	SLE RA 17	12	-442	3194	42.33	7.85	0
282	SLE RA 18	12	-448	3234	42.74	7.95	0
282	SLE RA 19	12	-448	3233	42.71	7.94	0
282	SLE RA 20	12	-455	3269	43.35	8.05	0
282	SLE RA 21	12	-454	3268	43.33	8.05	0
282	SLE FR 1	11	-387	2869	37.38	6.91	0
282	SLE FR 2	11	-387	2869	37.37	6.91	0
282	SLE FR 3	11	-390	2883	37.63	6.95	0
282	SLE FR 4	11	-405	2979	38.98	7.22	0
282	SLE FR 5	11	-408	2993	39.23	7.26	0
282	SLE FR 6	11	-418	3052	40.06	7.43	0
282	SLE QP 1	11	-387	2869	37.38	6.91	0
282	SLE QP 2	11	-406	2979	38.99	7.22	0
282	SLD 1	17	-333	3186	35.53	11.09	0
282	SLD 2	17	-333	3186	35.53	11.09	0
282	SLD 3	21	-747	3299	58.48	13.8	0
282	SLD 4	21	-747	3299	58.48	13.8	0
282	SLD 5	7	244	2871	3.15	4.27	-0.01
282	SLD 6	7	244	2871	3.15	4.27	-0.01
282	SLD 7	21	-1136	3245	79.64	13.31	0.01
282	SLD 8	21	-1136	3245	79.64	13.31	0.01
282	SLD 9	2	325	2713	-1.66	1.13	-0.01
282	SLD 10	2	325	2713	-1.66	1.13	-0.01
282	SLD 11	16	-1055	3087	74.83	10.17	0.01
282	SLD 12	16	-1055	3087	74.83	10.17	0.01
282	SLD 13	1	-64	2659	19.5	0.64	0
282	SLD 14	1	-64	2659	19.5	0.64	0
282	SLD 15	5	-478	2771	42.45	3.35	0
282	SLD 16	5	-478	2771	42.45	3.35	0
282	SLV 1	25	-225	3462	30.21	16.15	0
282	SLV 2	25	-225	3462	30.21	16.15	0
282	SLV 3	35	-1222	3729	85.55	22.75	0.01
282	SLV 4	35	-1222	3729	85.55	22.75	0.01
282	SLV 5	0	1161	2719	-47.56	-0.11	-0.01
282	SLV 6	0	1161	2719	-47.56	-0.11	-0.01
282	SLV 7	34	-2163	3609	136.87	21.88	0.02
282	SLV 8	34	-2163	3609	136.87	21.88	0.02
282	SLV 9	-11	1352	2349	-58.9	-7.44	-0.02
282	SLV 10	-11	1352	2349	-58.9	-7.44	-0.02
282	SLV 11	22	-1972	3238	125.54	14.55	0.02
282	SLV 12	22	-1972	3238	125.54	14.55	0.02
282	SLV 13	-13	411	2228	-7.57	-8.31	-0.01
282	SLV 14	-13	411	2228	-7.57	-8.31	-0.01
282	SLV 15	-3	-586	2495	47.76	-1.71	0
282	SLV 16	-3	-586	2495	47.76	-1.71	0
283	SLU 1	-2	-511	1972	9.11	7.69	1.1
283	SLU 2	-2	-512	1975	9.2	7.64	1.09
283	SLU 3	-2	-529	2039	9.41	8.01	1.15
283	SLU 4	-2	-529	2041	9.47	7.97	1.14
283	SLU 5	-2	-525	2022	9.42	7.85	1.12
283	SLU 6	-2	-541	2086	9.63	8.23	1.18
283	SLU 7	-2	-542	2088	9.69	8.19	1.17
283	SLU 8	-2	-536	2067	9.55	8.13	1.16
283	SLU 9	-2	-537	2068	9.61	8.09	1.16
283	SLU 10	-2	-580	2233	10.34	8.84	1.26
283	SLU 11	-3	-597	2297	10.55	9.21	1.32
283	SLU 12	-3	-598	2299	10.61	9.17	1.31
283	SLU 13	-3	-593	2280	10.56	9.05	1.29
283	SLU 14	-3	-610	2345	10.77	9.43	1.35
283	SLU 15	-3	-610	2346	10.83	9.39	1.34
283	SLU 16	-3	-605	2325	10.69	9.33	1.33
283	SLU 17	-3	-605	2326	10.75	9.29	1.33
283	SLU 18	-3	-608	2341	10.74	9.41	1.34
283	SLU 19	-3	-609	2343	10.79	9.37	1.34
283	SLU 20	-3	-621	2388	10.96	9.62	1.38
283	SLU 21	-3	-622	2390	11.01	9.59	1.37
283	SLU 22	-2	-578	2227	10.23	8.9	1.27
283	SLU 23	-2	-579	2230	10.32	8.84	1.26
283	SLU 24	-3	-596	2294	10.53	9.21	1.32
283	SLU 25	-3	-597	2296	10.58	9.18	1.31
283	SLU 26	-2	-592	2277	10.54	9.05	1.3
283	SLU 27	-3	-609	2341	10.75	9.43	1.35
283	SLU 28	-3	-609	2343	10.81	9.39	1.34
283	SLU 29	-3	-604	2322	10.67	9.33	1.33
283	SLU 30	-3	-604	2323	10.73	9.3	1.33
283	SLU 31	-3	-647	2488	11.46	10.04	1.43
283	SLU 32	-3	-664	2552	11.67	10.41	1.49
283	SLU 33	-3	-665	2554	11.72	10.38	1.48
283	SLU 34	-3	-660	2535	11.68	10.25	1.47
283	SLU 35	-3	-677	2600	11.89	10.63	1.52
283	SLU 36	-3	-678	2601	11.95	10.59	1.51
283	SLU 37	-3	-672	2580	11.81	10.53	1.5
283	SLU 38	-3	-672	2581	11.87	10.49	1.5
283	SLU 39	-3	-676	2596	11.85	10.61	1.51
283	SLU 40	-3	-676	2598	11.91	10.57	1.51
283	SLU 41	-3	-688	2643	12.07	10.83	1.55

Nodo	Cont.	Reazione a traslazione			Reazione a rotazione		
Ind.	N.br.	x	y	z	x	y	z
283	SLU 42	-3	-689	2645	12.13	10.79	1.54
283	SLU 43	-2	-641	2476	11.46	9.59	1.37
283	SLU 44	-2	-642	2479	11.55	9.53	1.37
283	SLU 45	-3	-659	2543	11.76	9.91	1.42
283	SLU 46	-2	-660	2545	11.82	9.87	1.41
283	SLU 47	-2	-655	2526	11.77	9.75	1.4
283	SLU 48	-3	-672	2590	11.98	10.12	1.45
283	SLU 49	-3	-672	2592	12.04	10.09	1.44
283	SLU 50	-3	-666	2571	11.9	10.02	1.43
283	SLU 51	-3	-667	2572	11.96	9.99	1.43
283	SLU 52	-3	-710	2737	12.69	10.73	1.54
283	SLU 53	-3	-727	2802	12.9	11.11	1.59
283	SLU 54	-3	-728	2803	12.95	11.07	1.58
283	SLU 55	-3	-723	2784	12.91	10.95	1.57
283	SLU 56	-3	-740	2849	13.12	11.32	1.62
283	SLU 57	-3	-740	2850	13.18	11.29	1.61
283	SLU 58	-3	-735	2829	13.04	11.22	1.6
283	SLU 59	-3	-735	2831	13.1	11.19	1.6
283	SLU 60	-3	-739	2845	13.08	11.3	1.62
283	SLU 61	-3	-739	2847	13.14	11.27	1.61
283	SLU 62	-3	-751	2892	13.31	11.52	1.65
283	SLU 63	-3	-752	2894	13.36	11.49	1.64
283	SLU 64	-3	-708	2731	12.57	10.79	1.54
283	SLU 65	-3	-709	2734	12.67	10.73	1.54
283	SLU 66	-3	-726	2798	12.88	11.11	1.59
283	SLU 67	-3	-727	2800	12.93	11.07	1.58
283	SLU 68	-3	-722	2781	12.89	10.95	1.57
283	SLU 69	-3	-739	2846	13.1	11.33	1.62
283	SLU 70	-3	-740	2847	13.16	11.29	1.62
283	SLU 71	-3	-734	2826	13.02	11.23	1.61
283	SLU 72	-3	-734	2827	13.08	11.19	1.6
283	SLU 73	-3	-778	2992	13.81	11.93	1.71
283	SLU 74	-4	-794	3057	14.02	12.31	1.76
283	SLU 75	-3	-795	3058	14.07	12.27	1.75
283	SLU 76	-3	-790	3039	14.03	12.15	1.74
283	SLU 77	-4	-807	3104	14.24	12.52	1.79
283	SLU 78	-4	-808	3105	14.29	12.49	1.79
283	SLU 79	-4	-802	3084	14.16	12.43	1.78
283	SLU 80	-4	-803	3086	14.21	12.39	1.77
283	SLU 81	-4	-806	3100	14.2	12.51	1.79
283	SLU 82	-4	-806	3102	14.26	12.47	1.78
283	SLU 83	-4	-819	3147	14.42	12.72	1.82
283	SLU 84	-4	-819	3149	14.48	12.69	1.81
283	SLE RA 1	-2	-530	2045	9.43	8.04	1.15
283	SLE RA 2	-2	-531	2047	9.49	8	1.14
283	SLE RA 3	-2	-542	2090	9.63	8.25	1.18
283	SLE RA 4	-2	-542	2091	9.67	8.22	1.18
283	SLE RA 5	-2	-539	2078	9.64	8.14	1.17
283	SLE RA 6	-2	-551	2121	9.78	8.39	1.2
283	SLE RA 7	-2	-551	2122	9.81	8.37	1.2
283	SLE RA 8	-2	-547	2108	9.72	8.33	1.19
283	SLE RA 9	-2	-547	2109	9.76	8.3	1.19
283	SLE RA 10	-2	-576	2219	10.25	8.8	1.26
283	SLE RA 11	-3	-588	2262	10.39	9.05	1.29
283	SLE RA 12	-3	-588	2263	10.43	9.02	1.29
283	SLE RA 13	-2	-585	2250	10.4	8.94	1.28
283	SLE RA 14	-3	-596	2293	10.54	9.19	1.31
283	SLE RA 15	-3	-596	2294	10.57	9.17	1.31
283	SLE RA 16	-3	-593	2280	10.48	9.13	1.3
283	SLE RA 17	-3	-593	2281	10.52	9.1	1.3
283	SLE RA 18	-3	-595	2291	10.51	9.18	1.31
283	SLE RA 19	-3	-595	2292	10.55	9.16	1.31
283	SLE RA 20	-3	-604	2322	10.66	9.32	1.33
283	SLE RA 21	-3	-604	2323	10.7	9.3	1.33
283	SLE FR 1	-2	-530	2045	9.43	8.04	1.15
283	SLE FR 2	-2	-530	2045	9.44	8.03	1.15
283	SLE FR 3	-2	-533	2057	9.49	8.1	1.16
283	SLE FR 4	-2	-550	2119	9.77	8.37	1.2
283	SLE FR 5	-2	-553	2131	9.81	8.44	1.21
283	SLE FR 6	-2	-563	2168	9.97	8.61	1.23
283	SLE QP 1	-2	-530	2045	9.43	8.04	1.15
283	SLE QP 2	-2	-550	2119	9.75	8.38	1.2
283	SLD 1	-14	-565	2163	9.61	10.94	1.55
283	SLD 2	-14	-565	2163	9.61	10.94	1.55
283	SLD 3	-12	-899	3146	21.66	11.83	1.68
283	SLD 4	-12	-899	3146	21.66	11.83	1.68
283	SLD 5	-10	-48	642	-8.57	7.79	1.11
283	SLD 6	-10	-48	642	-8.57	7.79	1.11
283	SLD 7	-1	-1161	3916	31.6	10.77	1.54
283	SLD 8	-1	-1161	3916	31.6	10.77	1.54
283	SLD 9	-3	62	321	-12.1	5.99	0.86
283	SLD 10	-3	62	321	-12.1	5.99	0.86
283	SLD 11	5	-1052	3595	28.08	8.97	1.29
283	SLD 12	5	-1052	3595	28.08	8.97	1.29
283	SLD 13	7	-200	1092	-2.16	4.93	0.72
283	SLD 14	7	-200	1092	-2.16	4.93	0.72
283	SLD 15	9	-534	2074	9.9	5.82	0.85
283	SLD 16	9	-534	2074	9.9	5.82	0.85
283	SLV 1	-30	-581	2211	9.25	14.31	2.01
283	SLV 2	-30	-581	2211	9.25	14.31	2.01

Nodo	Cont.	Reazione a traslazione			Reazione a rotazione		
Ind.	N.br.	x	y	z	x	y	z
283	SLV 3	-24	-1379	4557	38.09	16.53	2.33
283	SLV 4	-24	-1379	4557	38.09	16.53	2.33
283	SLV 5	-20	652	-1411	-34.14	6.78	0.96
283	SLV 6	-20	652	-1411	-34.14	6.78	0.96
283	SLV 7	0	-2009	6407	62	14.2	2.02
283	SLV 8	0	-2009	6407	62	14.2	2.02
283	SLV 9	-5	910	-2170	-42.49	2.56	0.38
283	SLV 10	-5	910	-2170	-42.49	2.56	0.38
283	SLV 11	15	-1751	5648	53.64	9.98	1.44
283	SLV 12	15	-1751	5648	53.64	9.98	1.44
283	SLV 13	20	280	-319	-18.59	0.23	0.07
283	SLV 14	20	280	-319	-18.59	0.23	0.07
283	SLV 15	25	-518	2026	10.25	2.45	0.39
283	SLV 16	25	-518	2026	10.25	2.45	0.39
284	SLU 1	0	-296	4024	2.21	0.12	0
284	SLU 2	0	-297	4018	2.4	0.13	0
284	SLU 3	0	-312	4135	2.49	0.11	0
284	SLU 4	0	-312	4132	2.6	0.12	0
284	SLU 5	0	-310	4080	2.69	0.12	0
284	SLU 6	0	-324	4197	2.78	0.11	0
284	SLU 7	0	-325	4194	2.89	0.12	0
284	SLU 8	0	-321	4148	2.79	0.11	0
284	SLU 9	0	-321	4144	2.9	0.11	0
284	SLU 10	0	-349	4571	2.74	0.16	0
284	SLU 11	0	-363	4688	2.83	0.15	0
284	SLU 12	0	-364	4685	2.95	0.15	0
284	SLU 13	0	-361	4633	3.03	0.15	0
284	SLU 14	0	-375	4750	3.12	0.14	0
284	SLU 15	0	-376	4747	3.24	0.15	0
284	SLU 16	0	-372	4701	3.13	0.14	0
284	SLU 17	0	-373	4697	3.25	0.14	0
284	SLU 18	0	-369	4814	2.7	0.16	0
284	SLU 19	0	-370	4811	2.81	0.17	0
284	SLU 20	0	-381	4876	2.99	0.16	0
284	SLU 21	0	-382	4873	3.1	0.16	0
284	SLU 22	0	-347	4559	2.64	0.14	0
284	SLU 23	0	-349	4553	2.83	0.15	0
284	SLU 24	0	-363	4671	2.92	0.14	0
284	SLU 25	0	-364	4667	3.03	0.15	0
284	SLU 26	0	-361	4615	3.12	0.15	0
284	SLU 27	0	-375	4733	3.21	0.13	0
284	SLU 28	0	-376	4729	3.32	0.14	0
284	SLU 29	0	-372	4683	3.22	0.13	0
284	SLU 30	0	-373	4680	3.33	0.14	0
284	SLU 31	0	-400	5107	3.17	0.18	0
284	SLU 32	0	-414	5224	3.26	0.17	0
284	SLU 33	0	-415	5220	3.38	0.18	0
284	SLU 34	0	-412	5169	3.46	0.18	0
284	SLU 35	0	-426	5286	3.55	0.17	0
284	SLU 36	0	-427	5282	3.67	0.17	0
284	SLU 37	0	-423	5237	3.56	0.16	0
284	SLU 38	0	-424	5233	3.68	0.17	0
284	SLU 39	0	-421	5350	3.13	0.19	0
284	SLU 40	0	-421	5346	3.24	0.19	0
284	SLU 41	0	-433	5412	3.42	0.18	0
284	SLU 42	0	-433	5408	3.53	0.19	0
284	SLU 43	0	-367	5048	2.72	0.14	0
284	SLU 44	0	-369	5042	2.91	0.15	0
284	SLU 45	0	-383	5159	3	0.14	0
284	SLU 46	0	-384	5155	3.12	0.15	0
284	SLU 47	0	-381	5104	3.2	0.15	0
284	SLU 48	0	-395	5221	3.29	0.14	0
284	SLU 49	0	-396	5217	3.41	0.14	0
284	SLU 50	0	-392	5172	3.3	0.13	0
284	SLU 51	0	-393	5168	3.42	0.14	0
284	SLU 52	0	-420	5595	3.26	0.18	0
284	SLU 53	0	-434	5712	3.35	0.17	0
284	SLU 54	0	-435	5708	3.46	0.18	0
284	SLU 55	0	-432	5657	3.55	0.18	0
284	SLU 56	0	-446	5774	3.64	0.17	0
284	SLU 57	0	-447	5770	3.75	0.17	0
284	SLU 58	0	-443	5725	3.65	0.16	0
284	SLU 59	0	-444	5721	3.76	0.17	0
284	SLU 60	0	-441	5838	3.21	0.19	0
284	SLU 61	0	-441	5834	3.33	0.19	0
284	SLU 62	0	-453	5900	3.5	0.18	0
284	SLU 63	0	-453	5896	3.62	0.19	0
284	SLU 64	0	-419	5583	3.15	0.17	0
284	SLU 65	0	-420	5577	3.34	0.18	0
284	SLU 66	0	-434	5694	3.43	0.17	0
284	SLU 67	0	-435	5691	3.55	0.17	0
284	SLU 68	0	-432	5639	3.63	0.17	0
284	SLU 69	0	-447	5756	3.72	0.16	0
284	SLU 70	0	-447	5753	3.84	0.17	0
284	SLU 71	0	-443	5707	3.73	0.16	0
284	SLU 72	0	-444	5703	3.85	0.16	0
284	SLU 73	0	-471	6130	3.69	0.21	0
284	SLU 74	0	-485	6247	3.78	0.2	0
284	SLU 75	0	-486	6244	3.89	0.2	0
284	SLU 76	0	-483	6192	3.98	0.2	0

Nodo	Cont.	Reazione a traslazione			Reazione a rotazione		
Ind.	N.br.	x	y	z	x	y	z
284	SLU 77	0	-498	6309	4.07	0.19	0
284	SLU 78	0	-498	6306	4.18	0.2	0
284	SLU 79	0	-494	6260	4.08	0.19	0
284	SLU 80	0	-495	6257	4.19	0.2	0
284	SLU 81	0	-492	6373	3.64	0.21	0
284	SLU 82	0	-493	6370	3.76	0.22	0
284	SLU 83	0	-504	6435	3.93	0.21	0
284	SLU 84	0	-505	6432	4.05	0.21	0
284	SLE RA 1	0	-311	4177	2.33	0.12	0
284	SLE RA 2	0	-312	4173	2.46	0.13	0
284	SLE RA 3	0	-321	4251	2.52	0.12	0
284	SLE RA 4	0	-322	4249	2.59	0.13	0
284	SLE RA 5	0	-320	4214	2.65	0.13	0
284	SLE RA 6	0	-329	4292	2.71	0.12	0
284	SLE RA 7	0	-330	4290	2.79	0.12	0
284	SLE RA 8	0	-327	4260	2.72	0.12	0
284	SLE RA 9	0	-328	4257	2.79	0.12	0
284	SLE RA 10	0	-346	4542	2.69	0.15	0
284	SLE RA 11	0	-355	4620	2.75	0.14	0
284	SLE RA 12	0	-356	4617	2.82	0.15	0
284	SLE RA 13	0	-354	4583	2.88	0.15	0
284	SLE RA 14	0	-363	4661	2.94	0.14	0
284	SLE RA 15	0	-364	4659	3.02	0.14	0
284	SLE RA 16	0	-361	4628	2.95	0.14	0
284	SLE RA 17	0	-362	4626	3.02	0.14	0
284	SLE RA 18	0	-360	4704	2.66	0.15	0
284	SLE RA 19	0	-360	4701	2.73	0.16	0
284	SLE RA 20	0	-368	4745	2.85	0.15	0
284	SLE RA 21	0	-368	4743	2.93	0.15	0
284	SLE FR 1	0	-311	4177	2.33	0.12	0
284	SLE FR 2	0	-311	4176	2.36	0.12	0
284	SLE FR 3	0	-314	4194	2.41	0.12	0
284	SLE FR 4	0	-326	4334	2.45	0.13	0
284	SLE FR 5	0	-329	4352	2.51	0.13	0
284	SLE FR 6	0	-335	4440	2.49	0.14	0
284	SLE QP 1	0	-311	4177	2.33	0.12	0
284	SLE QP 2	0	-325	4335	2.43	0.13	0
284	SLD 1	9	38	4514	-0.41	8.28	-0.02
284	SLD 2	9	38	4514	-0.41	8.28	-0.02
284	SLD 3	7	-357	4998	20.29	6.95	-0.02
284	SLD 4	7	-357	4998	20.29	6.95	-0.02
284	SLD 5	5	382	3654	-29.83	4.6	-0.01
284	SLD 6	5	382	3654	-29.83	4.6	-0.01
284	SLD 7	0	-933	5269	39.19	0.15	0
284	SLD 8	0	-933	5269	39.19	0.15	0
284	SLD 9	0	282	3401	-34.34	0.11	0
284	SLD 10	0	282	3401	-34.34	0.11	0
284	SLD 11	-5	-1033	5016	34.69	-4.34	0.01
284	SLD 12	-5	-1033	5016	34.69	-4.34	0.01
284	SLD 13	-7	-294	3672	-15.44	-6.68	0.02
284	SLD 14	-7	-294	3672	-15.44	-6.68	0.02
284	SLD 15	-9	-688	4156	5.27	-8.02	0.02
284	SLD 16	-9	-688	4156	5.27	-8.02	0.02
284	SLV 1	21	538	4753	-4.47	19.99	-0.05
284	SLV 2	21	538	4753	-4.47	19.99	-0.05
284	SLV 3	17	-404	5899	45.01	16.6	-0.04
284	SLV 4	17	-404	5899	45.01	16.6	-0.04
284	SLV 5	12	1362	2721	-74.69	11.24	-0.03
284	SLV 6	12	1362	2721	-74.69	11.24	-0.03
284	SLV 7	-1	-1778	6544	90.25	-0.08	0
284	SLV 8	-1	-1778	6544	90.25	-0.08	0
284	SLV 9	1	1127	2127	-85.39	0.34	0
284	SLV 10	1	1127	2127	-85.39	0.34	0
284	SLV 11	-12	-2013	5949	79.54	-10.98	0.03
284	SLV 12	-12	-2013	5949	79.54	-10.98	0.03
284	SLV 13	-17	-246	2771	-40.15	-16.33	0.04
284	SLV 14	-17	-246	2771	-40.15	-16.33	0.04
284	SLV 15	-21	-1189	3918	9.33	-19.73	0.05
284	SLV 16	-21	-1189	3918	9.33	-19.73	0.05
285	SLU 1	2	-213	4054	8.41	1.27	0
285	SLU 2	2	-211	4053	8.34	1.27	0
285	SLU 3	2	-221	4181	8.73	1.32	0
285	SLU 4	2	-220	4180	8.69	1.32	0
285	SLU 5	2	-216	4133	8.52	1.3	0
285	SLU 6	2	-226	4261	8.9	1.35	0
285	SLU 7	2	-225	4261	8.86	1.35	0
285	SLU 8	2	-223	4215	8.76	1.33	0
285	SLU 9	2	-222	4215	8.72	1.33	0
285	SLU 10	2	-250	4630	9.87	1.45	0
285	SLU 11	3	-260	4759	10.25	1.5	0
285	SLU 12	3	-259	4758	10.21	1.5	0
285	SLU 13	2	-255	4711	10.04	1.48	0
285	SLU 14	3	-265	4839	10.43	1.53	0
285	SLU 15	3	-264	4839	10.39	1.53	0
285	SLU 16	3	-262	4793	10.28	1.51	0
285	SLU 17	3	-261	4792	10.24	1.51	0
285	SLU 18	3	-269	4879	10.59	1.53	0
285	SLU 19	3	-268	4879	10.55	1.53	0
285	SLU 20	3	-273	4960	10.76	1.56	0
285	SLU 21	3	-272	4959	10.72	1.56	0

Nodo	Cont.	Reazione a traslazione			Reazione a rotazione		
Ind.	N.br.	x	y	z	x	y	z
285	SLU 22	2	-250	4607	9.85	1.45	0
285	SLU 23	2	-248	4606	9.78	1.46	0
285	SLU 24	3	-258	4734	10.16	1.5	0
285	SLU 25	3	-257	4734	10.12	1.5	0
285	SLU 26	2	-253	4687	9.95	1.48	0
285	SLU 27	3	-263	4815	10.34	1.53	0
285	SLU 28	3	-262	4814	10.3	1.53	0
285	SLU 29	3	-259	4769	10.19	1.51	0
285	SLU 30	3	-259	4768	10.15	1.51	0
285	SLU 31	3	-287	5184	11.31	1.64	0
285	SLU 32	3	-297	5312	11.69	1.68	0
285	SLU 33	3	-296	5311	11.65	1.68	0
285	SLU 34	3	-292	5265	11.48	1.67	0
285	SLU 35	3	-302	5393	11.86	1.71	0
285	SLU 36	3	-301	5392	11.82	1.71	0
285	SLU 37	3	-298	5347	11.72	1.69	0
285	SLU 38	3	-297	5346	11.68	1.69	0
285	SLU 39	3	-305	5433	12.03	1.71	0
285	SLU 40	3	-304	5432	11.99	1.71	0
285	SLU 41	3	-310	5514	12.2	1.74	0
285	SLU 42	3	-309	5513	12.16	1.74	0
285	SLU 43	3	-264	5080	10.44	1.59	0
285	SLU 44	3	-263	5079	10.37	1.59	0
285	SLU 45	3	-273	5207	10.76	1.64	0
285	SLU 46	3	-272	5206	10.72	1.64	0
285	SLU 47	3	-268	5160	10.55	1.62	0
285	SLU 48	3	-278	5288	10.93	1.66	0
285	SLU 49	3	-277	5287	10.89	1.67	0
285	SLU 50	3	-274	5242	10.79	1.65	0
285	SLU 51	3	-273	5241	10.75	1.65	0
285	SLU 52	3	-302	5657	11.9	1.77	0
285	SLU 53	3	-312	5785	12.28	1.82	0
285	SLU 54	3	-311	5784	12.24	1.82	0
285	SLU 55	3	-307	5738	12.07	1.8	0
285	SLU 56	3	-316	5866	12.46	1.85	0
285	SLU 57	3	-316	5865	12.42	1.85	0
285	SLU 58	3	-313	5820	12.31	1.83	0
285	SLU 59	3	-312	5819	12.27	1.83	0
285	SLU 60	3	-320	5906	12.62	1.85	0
285	SLU 61	3	-319	5905	12.58	1.85	0
285	SLU 62	3	-325	5986	12.79	1.88	0
285	SLU 63	3	-324	5986	12.75	1.88	0
285	SLU 64	3	-301	5634	11.88	1.77	0
285	SLU 65	3	-300	5633	11.81	1.77	0
285	SLU 66	3	-309	5761	12.19	1.82	0
285	SLU 67	3	-309	5760	12.15	1.82	0
285	SLU 68	3	-304	5713	11.98	1.8	0
285	SLU 69	3	-314	5841	12.37	1.85	0
285	SLU 70	3	-313	5841	12.33	1.85	0
285	SLU 71	3	-311	5795	12.22	1.83	0
285	SLU 72	3	-310	5795	12.18	1.83	0
285	SLU 73	3	-338	6210	13.34	1.96	0
285	SLU 74	3	-348	6338	13.72	2	0
285	SLU 75	3	-347	6338	13.68	2	0
285	SLU 76	3	-343	6291	13.51	1.98	0
285	SLU 77	3	-353	6419	13.89	2.03	0
285	SLU 78	3	-352	6419	13.85	2.03	0
285	SLU 79	3	-350	6373	13.75	2.01	0
285	SLU 80	3	-349	6372	13.71	2.01	0
285	SLU 81	3	-357	6459	14.06	2.03	0
285	SLU 82	3	-356	6459	14.02	2.03	0
285	SLU 83	3	-361	6540	14.23	2.06	0
285	SLU 84	3	-361	6539	14.19	2.06	0
285	SLE RA 1	2	-224	4212	8.82	1.32	0
285	SLE RA 2	2	-222	4211	8.78	1.32	0
285	SLE RA 3	2	-229	4297	9.03	1.35	0
285	SLE RA 4	2	-229	4296	9	1.36	0
285	SLE RA 5	2	-226	4265	8.89	1.34	0
285	SLE RA 6	2	-232	4350	9.15	1.37	0
285	SLE RA 7	2	-232	4350	9.12	1.37	0
285	SLE RA 8	2	-230	4320	9.05	1.36	0
285	SLE RA 9	2	-229	4319	9.03	1.36	0
285	SLE RA 10	2	-248	4596	9.79	1.45	0
285	SLE RA 11	2	-255	4682	10.05	1.48	0
285	SLE RA 12	2	-254	4681	10.02	1.48	0
285	SLE RA 13	2	-252	4650	9.91	1.46	0
285	SLE RA 14	2	-258	4736	10.16	1.49	0
285	SLE RA 15	2	-258	4735	10.14	1.5	0
285	SLE RA 16	2	-256	4705	10.07	1.48	0
285	SLE RA 17	2	-255	4704	10.04	1.48	0
285	SLE RA 18	2	-261	4762	10.27	1.5	0
285	SLE RA 19	2	-260	4762	10.25	1.5	0
285	SLE RA 20	3	-264	4816	10.39	1.51	0
285	SLE RA 21	3	-263	4816	10.36	1.52	0
285	SLE FR 1	2	-224	4212	8.82	1.32	0
285	SLE FR 2	2	-223	4212	8.81	1.32	0
285	SLE FR 3	2	-225	4234	8.87	1.33	0
285	SLE FR 4	2	-234	4377	9.25	1.38	0
285	SLE FR 5	2	-236	4399	9.3	1.38	0
285	SLE FR 6	2	-242	4487	9.55	1.41	0

Nodo	Cont.	Reazione a traslazione			Reazione a rotazione		
Ind.	N.br.	x	y	z	x	y	z
285	SLE QP 1	2	-224	4212	8.82	1.32	0
285	SLE QP 2	2	-235	4377	9.26	1.37	0
285	SLD 1	-1	122	3885	-7.36	5.81	0.01
285	SLD 2	-1	122	3885	-7.36	5.81	0.01
285	SLD 3	-4	-416	4182	18.05	3.63	0
285	SLD 4	-4	-416	4182	18.05	3.63	0
285	SLD 5	5	688	3779	-34.27	6.01	0.01
285	SLD 6	5	688	3779	-34.27	6.01	0.01
285	SLD 7	-4	-1105	4769	50.43	-1.25	0
285	SLD 8	-4	-1105	4769	50.43	-1.25	0
285	SLD 9	8	636	3986	-31.92	4	0.01
285	SLD 10	8	636	3986	-31.92	4	0.01
285	SLD 11	-1	-1157	4975	52.78	-3.26	-0.01
285	SLD 12	-1	-1157	4975	52.78	-3.26	-0.01
285	SLD 13	9	-53	4572	0.46	-0.88	0
285	SLD 14	9	-53	4572	0.46	-0.88	0
285	SLD 15	6	-591	4869	25.87	-3.06	0
285	SLD 16	6	-591	4869	25.87	-3.06	0
285	SLV 1	-6	620	3218	-30.63	12	0.01
285	SLV 2	-6	620	3218	-30.63	12	0.01
285	SLV 3	-13	-669	3929	30.28	6.47	0.01
285	SLV 4	-13	-669	3929	30.28	6.47	0.01
285	SLV 5	10	1977	2951	-95.09	12.96	0.02
285	SLV 6	10	1977	2951	-95.09	12.96	0.02
285	SLV 7	-13	-2320	5321	107.95	-5.49	-0.01
285	SLV 8	-13	-2320	5321	107.95	-5.49	-0.01
285	SLV 9	17	1851	3433	-89.43	8.24	0.01
285	SLV 10	17	1851	3433	-89.43	8.24	0.01
285	SLV 11	-6	-2446	5804	113.6	-10.21	-0.01
285	SLV 12	-6	-2446	5804	113.6	-10.21	-0.01
285	SLV 13	18	200	4825	-11.77	-3.72	0
285	SLV 14	18	200	4825	-11.77	-3.72	0
285	SLV 15	11	-1089	5536	49.14	-9.25	-0.01
285	SLV 16	11	-1089	5536	49.14	-9.25	-0.01
286	SLU 1	25	-878	6229	20.8	18.39	0.56
286	SLU 2	24	-798	6059	17.99	18.17	0.55
286	SLU 3	26	-911	6455	21.5	19.15	0.59
286	SLU 4	25	-863	6353	19.81	19.02	0.58
286	SLU 5	25	-821	6236	18.45	18.75	0.57
286	SLU 6	26	-934	6632	21.96	19.73	0.61
286	SLU 7	26	-886	6530	20.27	19.6	0.6
286	SLU 8	26	-925	6583	21.72	19.55	0.6
286	SLU 9	26	-876	6481	20.03	19.42	0.59
286	SLU 10	27	-896	6763	20.26	20.48	0.62
286	SLU 11	29	-1009	7160	23.77	21.46	0.66
286	SLU 12	28	-961	7058	22.08	21.33	0.65
286	SLU 13	28	-919	6941	20.72	21.05	0.64
286	SLU 14	29	-1032	7337	24.22	22.04	0.68
286	SLU 15	29	-984	7235	22.54	21.9	0.67
286	SLU 16	29	-1023	7288	23.98	21.86	0.67
286	SLU 17	29	-975	7186	22.3	21.72	0.66
286	SLU 18	29	-1018	7236	24.04	21.69	0.66
286	SLU 19	28	-970	7133	22.36	21.55	0.65
286	SLU 20	30	-1042	7413	24.5	22.27	0.68
286	SLU 21	29	-993	7311	22.81	22.13	0.67
286	SLU 22	28	-980	6946	23.14	20.76	0.64
286	SLU 23	27	-900	6776	20.33	20.54	0.62
286	SLU 24	29	-1013	7173	23.84	21.52	0.66
286	SLU 25	28	-965	7070	22.15	21.39	0.65
286	SLU 26	28	-923	6953	20.79	21.11	0.64
286	SLU 27	30	-1036	7350	24.29	22.1	0.68
286	SLU 28	29	-988	7248	22.61	21.96	0.67
286	SLU 29	29	-1027	7301	24.05	21.92	0.67
286	SLU 30	29	-979	7199	22.37	21.78	0.66
286	SLU 31	30	-998	7481	22.6	22.84	0.69
286	SLU 32	32	-1111	7877	26.1	23.83	0.73
286	SLU 33	31	-1063	7775	24.42	23.69	0.72
286	SLU 34	31	-1021	7658	23.05	23.42	0.71
286	SLU 35	33	-1134	8055	26.56	24.41	0.75
286	SLU 36	32	-1086	7952	24.88	24.27	0.74
286	SLU 37	32	-1125	8005	26.32	24.23	0.74
286	SLU 38	32	-1077	7903	24.63	24.09	0.73
286	SLU 39	32	-1121	7953	26.38	24.06	0.73
286	SLU 40	32	-1072	7851	24.69	23.92	0.73
286	SLU 41	33	-1144	8130	26.84	24.64	0.75
286	SLU 42	32	-1096	8028	25.15	24.5	0.74
286	SLU 43	31	-1107	7852	26.24	23.1	0.71
286	SLU 44	30	-1026	7681	23.43	22.87	0.7
286	SLU 45	32	-1139	8078	26.94	23.86	0.73
286	SLU 46	32	-1091	7976	25.25	23.73	0.72
286	SLU 47	31	-1049	7859	23.89	23.45	0.71
286	SLU 48	33	-1163	8255	27.4	24.44	0.75
286	SLU 49	32	-1114	8153	25.71	24.3	0.74
286	SLU 50	33	-1153	8206	27.16	24.26	0.75
286	SLU 51	32	-1105	8104	25.47	24.12	0.74
286	SLU 52	33	-1124	8386	25.7	25.18	0.76
286	SLU 53	35	-1238	8783	29.21	26.17	0.8
286	SLU 54	35	-1189	8680	27.52	26.03	0.79
286	SLU 55	34	-1148	8563	26.16	25.76	0.78
286	SLU 56	36	-1261	8960	29.66	26.75	0.82

Nodo	Cont.	Reazione a traslazione			Reazione a rotazione		
Ind.	N.br.	x	y	z	x	y	z
286	SLU 57	35	-1213	8858	27.98	26.61	0.81
286	SLU 58	36	-1251	8911	29.42	26.57	0.81
286	SLU 59	35	-1203	8809	27.74	26.43	0.81
286	SLU 60	35	-1247	8858	29.48	26.4	0.81
286	SLU 61	35	-1199	8756	27.8	26.26	0.8
286	SLU 62	36	-1270	9035	29.94	26.98	0.83
286	SLU 63	36	-1222	8933	28.25	26.84	0.82
286	SLU 64	34	-1209	8569	28.58	25.47	0.78
286	SLU 65	33	-1128	8399	25.77	25.24	0.77
286	SLU 66	35	-1241	8795	29.28	26.23	0.8
286	SLU 67	35	-1193	8693	27.59	26.09	0.8
286	SLU 68	34	-1152	8576	26.23	25.82	0.79
286	SLU 69	36	-1265	8973	29.73	26.81	0.82
286	SLU 70	36	-1216	8870	28.05	26.67	0.81
286	SLU 71	36	-1255	8923	29.49	26.63	0.82
286	SLU 72	35	-1207	8821	27.81	26.49	0.81
286	SLU 73	36	-1226	9103	28.04	27.55	0.84
286	SLU 74	38	-1340	9500	31.54	28.54	0.87
286	SLU 75	38	-1291	9398	29.86	28.4	0.87
286	SLU 76	37	-1250	9281	28.49	28.13	0.85
286	SLU 77	39	-1363	9677	32	29.11	0.89
286	SLU 78	39	-1315	9575	30.31	28.98	0.88
286	SLU 79	39	-1353	9628	31.76	28.93	0.89
286	SLU 80	38	-1305	9526	30.07	28.8	0.88
286	SLU 81	38	-1349	9576	31.82	28.77	0.88
286	SLU 82	38	-1301	9474	30.13	28.63	0.87
286	SLU 83	39	-1372	9753	32.27	29.34	0.9
286	SLU 84	39	-1324	9651	30.59	29.21	0.89
286	SLE RA 1	26	-907	6434	21.47	19.07	0.58
286	SLE RA 2	25	-854	6320	19.6	18.92	0.58
286	SLE RA 3	26	-929	6585	21.94	19.58	0.6
286	SLE RA 4	26	-897	6517	20.81	19.49	0.6
286	SLE RA 5	26	-869	6439	19.9	19.31	0.59
286	SLE RA 6	27	-945	6703	22.24	19.96	0.61
286	SLE RA 7	27	-912	6635	21.12	19.87	0.61
286	SLE RA 8	27	-938	6670	22.08	19.84	0.61
286	SLE RA 9	26	-906	6602	20.96	19.75	0.6
286	SLE RA 10	27	-919	6790	21.11	20.46	0.62
286	SLE RA 11	28	-995	7054	23.45	21.12	0.65
286	SLE RA 12	28	-962	6986	22.32	21.03	0.64
286	SLE RA 13	28	-935	6908	21.41	20.84	0.63
286	SLE RA 14	29	-1010	7173	23.75	21.5	0.66
286	SLE RA 15	28	-978	7105	22.63	21.41	0.65
286	SLE RA 16	29	-1004	7140	23.59	21.38	0.65
286	SLE RA 17	28	-972	7072	22.47	21.29	0.65
286	SLE RA 18	28	-1001	7105	23.63	21.27	0.65
286	SLE RA 19	28	-969	7037	22.51	21.18	0.65
286	SLE RA 20	29	-1016	7223	23.93	21.65	0.66
286	SLE RA 21	29	-984	7155	22.81	21.56	0.66
286	SLE FR 1	26	-907	6434	21.47	19.07	0.58
286	SLE FR 2	25	-897	6411	21.1	19.04	0.58
286	SLE FR 3	26	-913	6481	21.59	19.23	0.59
286	SLE FR 4	26	-925	6612	21.74	19.7	0.6
286	SLE FR 5	27	-942	6682	22.24	19.88	0.61
286	SLE FR 6	27	-954	6769	22.55	20.17	0.62
286	SLE QP 1	26	-907	6434	21.47	19.07	0.58
286	SLE QP 2	26	-935	6635	22.12	19.73	0.6
286	SLD 1	35	-960	8037	9.29	31.73	0.86
286	SLD 2	35	-960	8037	9.29	31.73	0.86
286	SLD 3	48	-1310	8837	22.54	39.69	1.1
286	SLD 4	48	-1310	8837	22.54	39.69	1.1
286	SLD 5	10	-411	5842	-1.84	11.26	0.32
286	SLD 6	10	-411	5842	-1.84	11.26	0.32
286	SLD 7	51	-1579	8509	42.35	37.79	1.12
286	SLD 8	51	-1579	8509	42.35	37.79	1.12
286	SLD 9	1	-292	4761	1.89	1.68	0.09
286	SLD 10	1	-292	4761	1.89	1.68	0.09
286	SLD 11	42	-1459	7428	46.07	28.2	0.89
286	SLD 12	42	-1459	7428	46.07	28.2	0.89
286	SLD 13	5	-561	4433	21.69	-0.23	0.11
286	SLD 14	5	-561	4433	21.69	-0.23	0.11
286	SLD 15	17	-911	5234	34.95	7.73	0.35
286	SLD 16	17	-911	5234	34.95	7.73	0.35
286	SLV 1	47	-991	9912	-8.05	47.45	1.18
286	SLV 2	47	-991	9912	-8.05	47.45	1.18
286	SLV 3	77	-1817	11809	23.12	67.09	1.77
286	SLV 4	77	-1817	11809	23.12	67.09	1.77
286	SLV 5	-14	301	4741	-34.21	-1.73	-0.13
286	SLV 6	-14	301	4741	-34.21	-1.73	-0.13
286	SLV 7	88	-2452	11064	69.69	63.71	1.86
286	SLV 8	88	-2452	11064	69.69	63.71	1.86
286	SLV 9	-35	581	2206	-25.46	-24.25	-0.65
286	SLV 10	-35	581	2206	-25.46	-24.25	-0.65
286	SLV 11	67	-2171	8529	78.44	41.19	1.33
286	SLV 12	67	-2171	8529	78.44	41.19	1.33
286	SLV 13	-25	-54	1461	21.12	-27.63	-0.56
286	SLV 14	-25	-54	1461	21.12	-27.63	-0.56
286	SLV 15	6	-880	3358	52.29	-7.99	0.03
286	SLV 16	6	-880	3358	52.29	-7.99	0.03
287	SLU 1	-4	-995	5721	43.15	-0.62	0.02

Nodo	Cont.	Reazione a traslazione			Reazione a rotazione		
Ind.	N.br.	x	y	z	x	y	z
287	SLU 2	-4	-907	5556	38.92	-0.8	0.02
287	SLU 3	-4	-1026	5946	44.51	-0.68	0.02
287	SLU 4	-4	-974	5847	41.97	-0.79	0.02
287	SLU 5	-4	-926	5735	39.73	-0.86	0.02
287	SLU 6	-4	-1045	6125	45.32	-0.74	0.02
287	SLU 7	-4	-992	6026	42.78	-0.85	0.02
287	SLU 8	-4	-1032	6079	44.77	-0.73	0.02
287	SLU 9	-4	-980	5980	42.23	-0.84	0.02
287	SLU 10	-4	-1028	6224	44.12	-0.89	0.02
287	SLU 11	-5	-1148	6614	49.72	-0.77	0.02
287	SLU 12	-5	-1095	6515	47.17	-0.88	0.02
287	SLU 13	-4	-1047	6403	44.93	-0.95	0.02
287	SLU 14	-5	-1166	6793	50.52	-0.82	0.02
287	SLU 15	-5	-1114	6694	47.98	-0.93	0.02
287	SLU 16	-5	-1154	6747	49.97	-0.82	0.02
287	SLU 17	-5	-1101	6648	47.43	-0.93	0.02
287	SLU 18	-5	-1168	6676	50.59	-0.74	0.02
287	SLU 19	-5	-1115	6577	48.05	-0.85	0.02
287	SLU 20	-5	-1187	6855	51.39	-0.8	0.02
287	SLU 21	-5	-1134	6755	48.85	-0.91	0.02
287	SLU 22	-4	-1117	6392	48.39	-0.72	0.02
287	SLU 23	-4	-1029	6227	44.15	-0.91	0.02
287	SLU 24	-5	-1148	6617	49.74	-0.79	0.02
287	SLU 25	-5	-1095	6518	47.2	-0.9	0.02
287	SLU 26	-4	-1047	6406	44.96	-0.96	0.02
287	SLU 27	-5	-1167	6796	50.55	-0.84	0.02
287	SLU 28	-5	-1114	6697	48.01	-0.95	0.02
287	SLU 29	-5	-1154	6750	50	-0.83	0.02
287	SLU 30	-5	-1101	6651	47.46	-0.95	0.02
287	SLU 31	-5	-1150	6895	49.36	-1	0.02
287	SLU 32	-5	-1269	7285	54.95	-0.87	0.02
287	SLU 33	-5	-1216	7186	52.41	-0.99	0.02
287	SLU 34	-5	-1169	7074	50.16	-1.05	0.02
287	SLU 35	-5	-1288	7464	55.75	-0.93	0.02
287	SLU 36	-5	-1235	7365	53.21	-1.04	0.02
287	SLU 37	-5	-1275	7418	55.2	-0.92	0.02
287	SLU 38	-5	-1222	7319	52.66	-1.03	0.02
287	SLU 39	-5	-1290	7347	55.82	-0.85	0.02
287	SLU 40	-5	-1237	7248	53.28	-0.96	0.02
287	SLU 41	-5	-1309	7526	56.63	-0.9	0.02
287	SLU 42	-5	-1256	7427	54.09	-1.02	0.02
287	SLU 43	-5	-1252	7207	54.31	-0.77	0.02
287	SLU 44	-5	-1164	7042	50.07	-0.95	0.02
287	SLU 45	-5	-1283	7432	55.66	-0.83	0.02
287	SLU 46	-5	-1230	7333	53.12	-0.94	0.02
287	SLU 47	-5	-1182	7221	50.88	-1.01	0.02
287	SLU 48	-5	-1302	7611	56.47	-0.88	0.03
287	SLU 49	-5	-1249	7512	53.93	-1	0.02
287	SLU 50	-5	-1289	7565	55.92	-0.88	0.02
287	SLU 51	-5	-1236	7466	53.38	-0.99	0.02
287	SLU 52	-5	-1285	7710	55.28	-1.04	0.02
287	SLU 53	-6	-1404	8100	60.87	-0.92	0.03
287	SLU 54	-6	-1352	8001	58.33	-1.03	0.03
287	SLU 55	-5	-1304	7889	56.08	-1.1	0.03
287	SLU 56	-6	-1423	8279	61.67	-0.97	0.03
287	SLU 57	-6	-1370	8180	59.13	-1.08	0.03
287	SLU 58	-6	-1410	8233	61.12	-0.96	0.03
287	SLU 59	-6	-1358	8134	58.58	-1.08	0.03
287	SLU 60	-6	-1425	8162	61.74	-0.89	0.03
287	SLU 61	-6	-1372	8063	59.2	-1	0.03
287	SLU 62	-6	-1444	8341	62.55	-0.95	0.03
287	SLU 63	-6	-1391	8242	60.01	-1.06	0.03
287	SLU 64	-6	-1373	7878	59.54	-0.87	0.03
287	SLU 65	-5	-1285	7713	55.3	-1.06	0.03
287	SLU 66	-6	-1405	8103	60.9	-0.94	0.03
287	SLU 67	-6	-1352	8004	58.36	-1.05	0.03
287	SLU 68	-6	-1304	7892	56.11	-1.11	0.03
287	SLU 69	-6	-1424	8282	61.7	-0.99	0.03
287	SLU 70	-6	-1371	8183	59.16	-1.1	0.03
287	SLU 71	-6	-1411	8236	61.15	-0.98	0.03
287	SLU 72	-6	-1358	8137	58.61	-1.09	0.03
287	SLU 73	-6	-1407	8381	60.51	-1.15	0.03
287	SLU 74	-6	-1526	8772	66.1	-1.02	0.03
287	SLU 75	-6	-1473	8672	63.56	-1.13	0.03
287	SLU 76	-6	-1425	8560	61.31	-1.2	0.03
287	SLU 77	-6	-1545	8950	66.91	-1.08	0.03
287	SLU 78	-6	-1492	8851	64.37	-1.19	0.03
287	SLU 79	-6	-1532	8904	66.36	-1.07	0.03
287	SLU 80	-6	-1479	8805	63.81	-1.18	0.03
287	SLU 81	-6	-1547	8833	66.97	-1	0.03
287	SLU 82	-6	-1494	8734	64.43	-1.11	0.03
287	SLU 83	-6	-1565	9012	67.78	-1.05	0.03
287	SLU 84	-6	-1512	8913	65.24	-1.16	0.03
287	SLE RA 1	-4	-1030	5913	44.65	-0.65	0.02
287	SLE RA 2	-4	-971	5803	41.83	-0.77	0.02
287	SLE RA 3	-4	-1051	6063	45.55	-0.69	0.02
287	SLE RA 4	-4	-1015	5997	43.86	-0.76	0.02
287	SLE RA 5	-4	-983	5922	42.36	-0.81	0.02
287	SLE RA 6	-4	-1063	6182	46.09	-0.73	0.02
287	SLE RA 7	-4	-1028	6116	44.4	-0.8	0.02

Nodo	Cont.	Reazione a traslazione			Reazione a rotazione		
Ind.	N.br.	x	y	z	x	y	z
287	SLE RA 8	-4	-1055	6151	45.72	-0.72	0.02
287	SLE RA 9	-4	-1019	6085	44.03	-0.8	0.02
287	SLE RA 10	-4	-1052	6248	45.3	-0.83	0.02
287	SLE RA 11	-5	-1131	6508	49.02	-0.75	0.02
287	SLE RA 12	-4	-1096	6442	47.33	-0.82	0.02
287	SLE RA 13	-4	-1064	6367	45.83	-0.87	0.02
287	SLE RA 14	-5	-1144	6628	49.56	-0.79	0.02
287	SLE RA 15	-5	-1109	6561	47.87	-0.86	0.02
287	SLE RA 16	-5	-1136	6597	49.19	-0.78	0.02
287	SLE RA 17	-5	-1100	6531	47.5	-0.85	0.02
287	SLE RA 18	-5	-1145	6549	49.61	-0.73	0.02
287	SLE RA 19	-4	-1110	6483	47.91	-0.81	0.02
287	SLE RA 20	-5	-1158	6668	50.14	-0.77	0.02
287	SLE RA 21	-5	-1122	6602	48.45	-0.84	0.02
287	SLE FR 1	-4	-1030	5913	44.65	-0.65	0.02
287	SLE FR 2	-4	-1018	5891	44.08	-0.67	0.02
287	SLE FR 3	-4	-1035	5960	44.86	-0.66	0.02
287	SLE FR 4	-4	-1053	6082	45.57	-0.7	0.02
287	SLE FR 5	-4	-1069	6151	46.35	-0.69	0.02
287	SLE FR 6	-4	-1087	6231	47.13	-0.69	0.02
287	SLE QP 1	-4	-1030	5913	44.65	-0.65	0.02
287	SLE QP 2	-4	-1064	6104	46.14	-0.67	0.02
287	SLD 1	-4	-683	3866	28.55	5.23	-0.01
287	SLD 2	-4	-683	3866	28.55	5.23	-0.01
287	SLD 3	9	-1032	4685	45.72	12.36	0.02
287	SLD 4	9	-1032	4685	45.72	12.36	0.02
287	SLD 5	-24	-421	4190	14.82	-9.72	-0.04
287	SLD 6	-24	-421	4190	14.82	-9.72	-0.04
287	SLD 7	19	-1583	6920	72.05	14.05	0.08
287	SLD 8	19	-1583	6920	72.05	14.05	0.08
287	SLD 9	-28	-545	5288	20.22	-15.4	-0.03
287	SLD 10	-28	-545	5288	20.22	-15.4	-0.03
287	SLD 11	15	-1707	8017	77.45	8.37	0.08
287	SLD 12	15	-1707	8017	77.45	8.37	0.08
287	SLD 13	-18	-1097	7523	46.55	-13.71	0.02
287	SLD 14	-18	-1097	7523	46.55	-13.71	0.02
287	SLD 15	-5	-1445	8342	63.72	-6.58	0.05
287	SLD 16	-5	-1445	8342	63.72	-6.58	0.05
287	SLV 1	-4	-171	853	4.9	13.21	-0.06
287	SLV 2	-4	-171	853	4.9	13.21	-0.06
287	SLV 3	29	-989	2789	45.19	31.26	0.03
287	SLV 4	29	-989	2789	45.19	31.26	0.03
287	SLV 5	-54	445	1591	-27.33	-23.88	-0.14
287	SLV 6	-54	445	1591	-27.33	-23.88	-0.14
287	SLV 7	55	-2283	8047	106.95	36.28	0.16
287	SLV 8	55	-2283	8047	106.95	36.28	0.16
287	SLV 9	-64	155	4161	-14.68	-37.63	-0.12
287	SLV 10	-64	155	4161	-14.68	-37.63	-0.12
287	SLV 11	45	-2574	10616	119.61	22.53	0.18
287	SLV 12	45	-2574	10616	119.61	22.53	0.18
287	SLV 13	-38	-1139	9418	47.08	-32.61	0.01
287	SLV 14	-38	-1139	9418	47.08	-32.61	0.01
287	SLV 15	-5	-1958	11355	87.37	-14.56	0.1
287	SLV 16	-5	-1958	11355	87.37	-14.56	0.1
288	SLU 1	10	-48	2700	-20.25	6.46	0
288	SLU 2	10	-46	2698	-20.34	6.46	0
288	SLU 3	10	-50	2780	-21.01	6.71	0
288	SLU 4	10	-49	2778	-21.07	6.7	0
288	SLU 5	10	-47	2750	-20.88	6.61	0
288	SLU 6	11	-51	2831	-21.55	6.87	0
288	SLU 7	11	-50	2830	-21.6	6.86	0
288	SLU 8	11	-49	2803	-21.32	6.78	0
288	SLU 9	11	-48	2801	-21.38	6.78	0
288	SLU 10	12	-60	3067	-22.91	7.52	0
288	SLU 11	12	-64	3148	-23.58	7.77	0.01
288	SLU 12	12	-63	3147	-23.64	7.76	0.01
288	SLU 13	12	-61	3118	-23.45	7.67	0
288	SLU 14	12	-65	3199	-24.12	7.93	0.01
288	SLU 15	12	-64	3198	-24.17	7.92	0.01
288	SLU 16	12	-64	3171	-23.89	7.84	0.01
288	SLU 17	12	-63	3170	-23.95	7.84	0.01
288	SLU 18	12	-68	3227	-23.92	7.98	0.01
288	SLU 19	12	-67	3226	-23.98	7.97	0.01
288	SLU 20	13	-69	3278	-24.46	8.14	0.01
288	SLU 21	13	-68	3277	-24.51	8.13	0.01
288	SLU 22	12	-60	3051	-22.91	7.49	0
288	SLU 23	12	-58	3050	-23.01	7.49	0
288	SLU 24	12	-62	3131	-23.67	7.74	0
288	SLU 25	12	-61	3130	-23.73	7.73	0
288	SLU 26	12	-59	3101	-23.54	7.65	0
288	SLU 27	12	-63	3182	-24.21	7.9	0.01
288	SLU 28	12	-62	3181	-24.26	7.89	0.01
288	SLU 29	12	-62	3154	-23.98	7.81	0.01
288	SLU 30	12	-61	3152	-24.04	7.81	0.01
288	SLU 31	13	-73	3418	-25.57	8.55	0.01
288	SLU 32	14	-77	3499	-26.24	8.8	0.01
288	SLU 33	14	-76	3498	-26.3	8.79	0.01
288	SLU 34	14	-74	3469	-26.11	8.7	0.01
288	SLU 35	14	-78	3550	-26.78	8.96	0.01
288	SLU 36	14	-77	3549	-26.83	8.95	0.01

Nodo	Cont.	Reazione a traslazione			Reazione a rotazione		
Ind.	N.br.	x	y	z	x	y	z
288	SLU 37	14	-76	3522	-26.55	8.87	0.01
288	SLU 38	14	-75	3521	-26.61	8.87	0.01
288	SLU 39	14	-81	3578	-26.58	9.01	0.01
288	SLU 40	14	-80	3577	-26.64	9	0.01
288	SLU 41	14	-82	3629	-27.12	9.17	0.01
288	SLU 42	14	-80	3628	-27.17	9.16	0.01
288	SLU 43	13	-58	3390	-25.41	8.05	0.01
288	SLU 44	13	-56	3388	-25.51	8.04	0.01
288	SLU 45	13	-60	3469	-26.18	8.29	0.01
288	SLU 46	13	-59	3468	-26.23	8.29	0.01
288	SLU 47	13	-57	3439	-26.04	8.2	0.01
288	SLU 48	13	-61	3520	-26.71	8.45	0.01
288	SLU 49	13	-60	3519	-26.77	8.45	0.01
288	SLU 50	13	-59	3492	-26.48	8.37	0.01
288	SLU 51	13	-58	3491	-26.54	8.36	0.01
288	SLU 52	14	-70	3757	-28.08	9.1	0.01
288	SLU 53	15	-74	3838	-28.74	9.35	0.01
288	SLU 54	15	-73	3837	-28.8	9.35	0.01
288	SLU 55	14	-71	3808	-28.61	9.26	0.01
288	SLU 56	15	-75	3889	-29.28	9.51	0.01
288	SLU 57	15	-74	3888	-29.33	9.51	0.01
288	SLU 58	15	-74	3861	-29.05	9.43	0.01
288	SLU 59	15	-73	3860	-29.11	9.42	0.01
288	SLU 60	15	-78	3917	-29.08	9.56	0.01
288	SLU 61	15	-77	3916	-29.14	9.56	0.01
288	SLU 62	15	-79	3968	-29.62	9.72	0.01
288	SLU 63	15	-78	3967	-29.67	9.72	0.01
288	SLU 64	14	-70	3741	-28.08	9.08	0.01
288	SLU 65	14	-68	3739	-28.17	9.07	0.01
288	SLU 66	15	-72	3820	-28.84	9.32	0.01
288	SLU 67	15	-71	3819	-28.89	9.32	0.01
288	SLU 68	14	-69	3790	-28.7	9.23	0.01
288	SLU 69	15	-73	3872	-29.37	9.48	0.01
288	SLU 70	15	-72	3870	-29.43	9.48	0.01
288	SLU 71	15	-72	3843	-29.15	9.4	0.01
288	SLU 72	15	-71	3842	-29.2	9.39	0.01
288	SLU 73	16	-83	4108	-30.74	10.13	0.01
288	SLU 74	16	-87	4189	-31.41	10.38	0.01
288	SLU 75	16	-86	4188	-31.46	10.38	0.01
288	SLU 76	16	-84	4159	-31.27	10.29	0.01
288	SLU 77	16	-88	4240	-31.94	10.54	0.01
288	SLU 78	16	-87	4239	-32	10.54	0.01
288	SLU 79	16	-86	4212	-31.72	10.46	0.01
288	SLU 80	16	-85	4211	-31.77	10.45	0.01
288	SLU 81	17	-91	4268	-31.75	10.59	0.01
288	SLU 82	16	-89	4267	-31.8	10.59	0.01
288	SLU 83	17	-91	4319	-32.28	10.75	0.01
288	SLU 84	17	-90	4318	-32.34	10.75	0.01
288	SLE RA 1	11	-51	2801	-21.01	6.76	0
288	SLE RA 2	11	-50	2799	-21.07	6.75	0
288	SLE RA 3	11	-53	2854	-21.52	6.92	0
288	SLE RA 4	11	-52	2853	-21.56	6.92	0
288	SLE RA 5	11	-51	2833	-21.43	6.86	0
288	SLE RA 6	11	-53	2888	-21.88	7.03	0
288	SLE RA 7	11	-53	2887	-21.91	7.02	0
288	SLE RA 8	11	-52	2869	-21.73	6.97	0
288	SLE RA 9	11	-52	2868	-21.76	6.97	0
288	SLE RA 10	12	-60	3045	-22.79	7.46	0
288	SLE RA 11	12	-62	3099	-23.23	7.63	0
288	SLE RA 12	12	-62	3099	-23.27	7.62	0
288	SLE RA 13	12	-60	3079	-23.14	7.56	0
288	SLE RA 14	12	-63	3133	-23.59	7.73	0
288	SLE RA 15	12	-62	3133	-23.63	7.73	0
288	SLE RA 16	12	-62	3115	-23.44	7.68	0
288	SLE RA 17	12	-61	3114	-23.48	7.67	0
288	SLE RA 18	12	-65	3152	-23.46	7.77	0.01
288	SLE RA 19	12	-64	3151	-23.5	7.76	0.01
288	SLE RA 20	12	-65	3186	-23.82	7.87	0.01
288	SLE RA 21	12	-65	3185	-23.85	7.87	0.01
288	SLE FR 1	11	-51	2801	-21.01	6.76	0
288	SLE FR 2	11	-51	2800	-21.02	6.76	0
288	SLE FR 3	11	-51	2814	-21.16	6.8	0
288	SLE FR 4	11	-55	2906	-21.76	7.06	0
288	SLE FR 5	11	-56	2920	-21.89	7.1	0
288	SLE FR 6	11	-58	2976	-22.24	7.26	0
288	SLE QP 1	11	-51	2801	-21.01	6.76	0
288	SLE QP 2	11	-55	2906	-21.75	7.06	0
288	SLD 1	17	27	3075	-26.53	10.97	0.01
288	SLD 2	17	27	3075	-26.53	10.97	0.01
288	SLD 3	20	-357	3212	-9.59	13.26	0.01
288	SLD 4	20	-357	3212	-9.59	13.26	0.01
288	SLD 5	8	553	2748	-48.87	4.76	0
288	SLD 6	8	553	2748	-48.87	4.76	0
288	SLD 7	19	-730	3206	7.59	12.39	0.01
288	SLD 8	19	-730	3206	7.59	12.39	0.01
288	SLD 9	3	619	2606	-51.08	1.73	0
288	SLD 10	3	619	2606	-51.08	1.73	0
288	SLD 11	14	-664	3064	5.38	9.36	0.01
288	SLD 12	14	-664	3064	5.38	9.36	0.01
288	SLD 13	2	247	2600	-33.9	0.86	0

Nodo	Cont.	Reazione a traslazione			Reazione a rotazione		
Ind.	N.br.	x	y	z	x	y	z
288	SLD 14	2	247	2600	-33.9	0.86	0
288	SLD 15	5	-138	2737	-16.97	3.15	0
288	SLD 16	5	-138	2737	-16.97	3.15	0
288	SLV 1	25	147	3299	-33.2	16.12	0.01
288	SLV 2	25	147	3299	-33.2	16.12	0.01
288	SLV 3	33	-778	3624	7.38	21.66	0.02
288	SLV 4	33	-778	3624	7.38	21.66	0.02
288	SLV 5	4	1408	2531	-86.73	1.37	-0.01
288	SLV 6	4	1408	2531	-86.73	1.37	-0.01
288	SLV 7	29	-1675	3614	48.54	19.85	0.02
288	SLV 8	29	-1675	3614	48.54	19.85	0.02
288	SLV 9	-7	1564	2198	-92.03	-5.73	-0.01
288	SLV 10	-7	1564	2198	-92.03	-5.73	-0.01
288	SLV 11	18	-1519	3281	43.23	12.75	0.02
288	SLV 12	18	-1519	3281	43.23	12.75	0.02
288	SLV 13	-11	667	2188	-50.88	-7.54	-0.01
288	SLV 14	-11	667	2188	-50.88	-7.54	-0.01
288	SLV 15	-3	-258	2513	-10.3	-2	0
288	SLV 16	-3	-258	2513	-10.3	-2	0
289	SLU 1	0	-592	3849	38.57	0.49	0
289	SLU 2	0	-592	3853	38.59	0.49	0
289	SLU 3	0	-616	3948	40.05	0.51	0
289	SLU 4	0	-616	3951	40.06	0.51	0
289	SLU 5	0	-609	3906	39.56	0.5	0
289	SLU 6	0	-632	4001	41.01	0.51	0
289	SLU 7	0	-632	4004	41.02	0.51	0
289	SLU 8	0	-625	3954	40.51	0.5	0
289	SLU 9	0	-625	3957	40.52	0.5	0
289	SLU 10	0	-687	4368	44.81	0.58	0
289	SLU 11	0	-711	4464	46.27	0.59	0
289	SLU 12	0	-711	4466	46.28	0.59	0
289	SLU 13	0	-704	4421	45.78	0.58	0
289	SLU 14	0	-728	4516	47.23	0.59	0
289	SLU 15	0	-728	4519	47.24	0.59	0
289	SLU 16	0	-720	4470	46.73	0.59	0
289	SLU 17	0	-720	4472	46.74	0.59	0
289	SLU 18	0	-728	4585	47.46	0.62	0
289	SLU 19	0	-728	4588	47.47	0.62	0
289	SLU 20	0	-744	4638	48.43	0.62	0
289	SLU 21	0	-745	4640	48.44	0.62	0
289	SLU 22	0	-685	4347	44.63	0.57	0
289	SLU 23	0	-686	4351	44.65	0.57	0
289	SLU 24	0	-709	4446	46.11	0.58	0
289	SLU 25	0	-709	4449	46.12	0.58	0
289	SLU 26	0	-702	4404	45.62	0.58	0
289	SLU 27	0	-726	4499	47.07	0.59	0
289	SLU 28	0	-726	4502	47.08	0.59	0
289	SLU 29	0	-718	4452	46.57	0.58	0
289	SLU 30	0	-718	4455	46.58	0.58	0
289	SLU 31	1	-781	4866	50.87	0.66	0
289	SLU 32	1	-805	4962	52.33	0.67	0
289	SLU 33	1	-805	4964	52.34	0.67	0
289	SLU 34	1	-797	4919	51.84	0.66	0
289	SLU 35	1	-821	5015	53.3	0.67	0
289	SLU 36	1	-821	5017	53.3	0.67	0
289	SLU 37	1	-813	4968	52.79	0.66	0
289	SLU 38	1	-814	4970	52.8	0.66	0
289	SLU 39	1	-821	5083	53.52	0.7	0
289	SLU 40	1	-822	5086	53.53	0.7	0
289	SLU 41	1	-838	5136	54.49	0.7	0
289	SLU 42	1	-838	5138	54.5	0.7	0
289	SLU 43	0	-738	4833	48.07	0.62	0
289	SLU 44	0	-738	4837	48.08	0.62	0
289	SLU 45	0	-762	4932	49.54	0.63	0
289	SLU 46	0	-762	4935	49.55	0.63	0
289	SLU 47	0	-754	4890	49.05	0.62	0
289	SLU 48	0	-778	4985	50.51	0.63	0
289	SLU 49	0	-778	4987	50.52	0.63	0
289	SLU 50	0	-770	4938	50	0.62	0
289	SLU 51	0	-771	4941	50.01	0.62	0
289	SLU 52	1	-833	5352	54.31	0.7	0
289	SLU 53	1	-857	5448	55.76	0.71	0
289	SLU 54	1	-857	5450	55.77	0.71	0
289	SLU 55	1	-850	5405	55.27	0.7	0
289	SLU 56	1	-873	5500	56.73	0.72	0
289	SLU 57	1	-873	5503	56.74	0.72	0
289	SLU 58	1	-866	5454	56.22	0.71	0
289	SLU 59	1	-866	5456	56.23	0.71	0
289	SLU 60	1	-874	5569	56.96	0.74	0
289	SLU 61	1	-874	5571	56.97	0.74	0
289	SLU 62	1	-890	5622	57.92	0.74	0
289	SLU 63	1	-890	5624	57.93	0.74	0
289	SLU 64	1	-831	5331	54.13	0.69	0
289	SLU 65	1	-831	5335	54.14	0.69	0
289	SLU 66	1	-855	5430	55.6	0.71	0
289	SLU 67	1	-855	5433	55.61	0.71	0
289	SLU 68	1	-848	5388	55.11	0.7	0
289	SLU 69	1	-871	5483	56.57	0.71	0
289	SLU 70	1	-871	5485	56.58	0.71	0
289	SLU 71	1	-864	5436	56.06	0.7	0

Nodo	Cont.	Reazione a traslazione			Reazione a rotazione		
Ind.	N.br.	x	y	z	x	y	z
289	SLU 72	1	-864	5439	56.07	0.7	0
289	SLU 73	1	-926	5850	60.37	0.78	0
289	SLU 74	1	-950	5946	61.82	0.79	0
289	SLU 75	1	-950	5948	61.83	0.79	0
289	SLU 76	1	-943	5903	61.33	0.78	0
289	SLU 77	1	-967	5998	62.79	0.79	0
289	SLU 78	1	-967	6001	62.8	0.79	0
289	SLU 79	1	-959	5952	62.29	0.79	0
289	SLU 80	1	-959	5954	62.29	0.79	0
289	SLU 81	1	-967	6067	63.02	0.82	0
289	SLU 82	1	-967	6069	63.03	0.82	0
289	SLU 83	1	-983	6120	63.98	0.82	0
289	SLU 84	1	-984	6122	63.99	0.82	0
289	SLE RA 1	0	-619	3991	40.31	0.52	0
289	SLE RA 2	0	-619	3994	40.32	0.52	0
289	SLE RA 3	0	-635	4057	41.29	0.52	0
289	SLE RA 4	0	-635	4059	41.29	0.52	0
289	SLE RA 5	0	-630	4029	40.96	0.52	0
289	SLE RA 6	0	-646	4093	41.93	0.53	0
289	SLE RA 7	0	-646	4094	41.94	0.53	0
289	SLE RA 8	0	-641	4061	41.6	0.52	0
289	SLE RA 9	0	-641	4063	41.6	0.52	0
289	SLE RA 10	0	-682	4337	44.46	0.57	0
289	SLE RA 11	0	-698	4401	45.43	0.58	0
289	SLE RA 12	0	-698	4403	45.44	0.58	0
289	SLE RA 13	0	-693	4373	45.11	0.58	0
289	SLE RA 14	0	-709	4436	46.08	0.58	0
289	SLE RA 15	0	-709	4438	46.09	0.58	0
289	SLE RA 16	0	-704	4405	45.74	0.58	0
289	SLE RA 17	0	-704	4407	45.75	0.58	0
289	SLE RA 18	0	-709	4482	46.23	0.6	0
289	SLE RA 19	0	-709	4484	46.24	0.6	0
289	SLE RA 20	0	-720	4517	46.88	0.6	0
289	SLE RA 21	0	-720	4519	46.88	0.6	0
289	SLE FR 1	0	-619	3991	40.31	0.52	0
289	SLE FR 2	0	-619	3992	40.31	0.52	0
289	SLE FR 3	0	-623	4005	40.56	0.52	0
289	SLE FR 4	0	-646	4139	42.09	0.54	0
289	SLE FR 5	0	-650	4152	42.34	0.54	0
289	SLE FR 6	0	-664	4236	43.27	0.56	0
289	SLE QP 1	0	-619	3991	40.31	0.52	0
289	SLE QP 2	0	-646	4138	42.08	0.54	0
289	SLD 1	-7	-283	4310	21.94	7.36	-0.02
289	SLD 2	-7	-283	4310	21.94	7.36	-0.02
289	SLD 3	-8	-648	5040	41.15	6.46	-0.02
289	SLD 4	-8	-648	5040	41.15	6.46	-0.02
289	SLD 5	0	16	3084	6.9	3.96	-0.01
289	SLD 6	0	16	3084	6.9	3.96	-0.01
289	SLD 7	-4	-1199	5515	70.94	0.94	0
289	SLD 8	-4	-1199	5515	70.94	0.94	0
289	SLD 9	5	-92	2762	13.23	0.14	0
289	SLD 10	5	-92	2762	13.23	0.14	0
289	SLD 11	0	-1308	5193	77.27	-2.88	0.01
289	SLD 12	0	-1308	5193	77.27	-2.88	0.01
289	SLD 13	9	-644	3237	43.02	-5.38	0.02
289	SLD 14	9	-644	3237	43.02	-5.38	0.02
289	SLD 15	7	-1009	3966	62.23	-6.28	0.02
289	SLD 16	7	-1009	3966	62.23	-6.28	0.02
289	SLV 1	-16	214	4538	-5.62	16.72	-0.05
289	SLV 2	-16	214	4538	-5.62	16.72	-0.05
289	SLV 3	-19	-655	6266	40.13	14.44	-0.04
289	SLV 4	-19	-655	6266	40.13	14.44	-0.04
289	SLV 5	1	930	1636	-41.61	8.84	-0.03
289	SLV 6	1	930	1636	-41.61	8.84	-0.03
289	SLV 7	-11	-1967	7399	110.89	1.26	0
289	SLV 8	-11	-1967	7399	110.89	1.26	0
289	SLV 9	11	675	878	-26.72	-0.18	0
289	SLV 10	11	675	878	-26.72	-0.18	0
289	SLV 11	0	-2222	6640	125.78	-7.76	0.03
289	SLV 12	0	-2222	6640	125.78	-7.76	0.03
289	SLV 13	20	-637	2010	44.04	-13.36	0.04
289	SLV 14	20	-637	2010	44.04	-13.36	0.04
289	SLV 15	17	-1506	3739	89.79	-15.63	0.05
289	SLV 16	17	-1506	3739	89.79	-15.63	0.05
290	SLU 1	18	-1552	6479	114.57	10.92	-0.02
290	SLU 2	18	-1463	6267	108.62	10.74	-0.02
290	SLU 3	19	-1614	6717	119.31	11.37	-0.02
290	SLU 4	19	-1560	6590	115.74	11.26	-0.02
290	SLU 5	18	-1509	6455	112.27	11.09	-0.02
290	SLU 6	20	-1660	6906	122.96	11.71	-0.01
290	SLU 7	19	-1606	6778	119.39	11.61	-0.02
290	SLU 8	20	-1645	6856	121.88	11.61	-0.01
290	SLU 9	19	-1591	6729	118.31	11.5	-0.02
290	SLU 10	20	-1635	7017	121.92	12.12	-0.03
290	SLU 11	21	-1786	7467	132.61	12.74	-0.02
290	SLU 12	21	-1733	7340	129.04	12.63	-0.02
290	SLU 13	21	-1682	7205	125.58	12.46	-0.03
290	SLU 14	22	-1833	7655	136.27	13.09	-0.02
290	SLU 15	22	-1779	7528	132.7	12.98	-0.02
290	SLU 16	22	-1817	7606	135.18	12.98	-0.02

Nodo	Cont.	Reazione a traslazione			Reazione a rotazione		
Ind.	N.br.	x	y	z	x	y	z
290	SLU 17	21	-1764	7478	131.61	12.88	-0.02
290	SLU 18	22	-1799	7550	133.58	12.88	-0.02
290	SLU 19	21	-1745	7423	130.01	12.78	-0.03
290	SLU 20	22	-1845	7739	137.23	13.23	-0.02
290	SLU 21	22	-1791	7611	133.66	13.12	-0.03
290	SLU 22	21	-1733	7240	128.46	12.33	-0.02
290	SLU 23	20	-1643	7028	122.51	12.15	-0.03
290	SLU 24	21	-1794	7479	133.2	12.77	-0.02
290	SLU 25	21	-1741	7351	129.63	12.67	-0.02
290	SLU 26	21	-1689	7217	126.17	12.49	-0.03
290	SLU 27	22	-1841	7667	136.86	13.12	-0.02
290	SLU 28	22	-1787	7540	133.29	13.01	-0.02
290	SLU 29	22	-1825	7617	135.77	13.02	-0.02
290	SLU 30	21	-1772	7490	132.2	12.91	-0.02
290	SLU 31	22	-1816	7778	135.82	13.52	-0.03
290	SLU 32	24	-1967	8228	146.51	14.15	-0.02
290	SLU 33	23	-1913	8101	142.94	14.04	-0.03
290	SLU 34	23	-1862	7967	139.47	13.87	-0.03
290	SLU 35	24	-2013	8417	150.16	14.49	-0.02
290	SLU 36	24	-1959	8290	146.59	14.39	-0.03
290	SLU 37	24	-1998	8367	149.08	14.39	-0.02
290	SLU 38	24	-1944	8240	145.51	14.28	-0.03
290	SLU 39	24	-1979	8312	147.47	14.29	-0.02
290	SLU 40	23	-1925	8184	143.9	14.18	-0.03
290	SLU 41	24	-2026	8500	151.12	14.63	-0.02
290	SLU 42	24	-1972	8373	147.55	14.53	-0.03
290	SLU 43	23	-1956	8161	144.18	13.71	-0.02
290	SLU 44	22	-1866	7949	138.23	13.54	-0.03
290	SLU 45	24	-2018	8400	148.92	14.16	-0.02
290	SLU 46	23	-1964	8272	145.35	14.06	-0.02
290	SLU 47	23	-1913	8138	141.88	13.88	-0.03
290	SLU 48	24	-2064	8588	152.57	14.51	-0.02
290	SLU 49	24	-2010	8461	149	14.4	-0.02
290	SLU 50	24	-2049	8539	151.49	14.4	-0.02
290	SLU 51	24	-1995	8411	147.92	14.3	-0.02
290	SLU 52	25	-2039	8699	151.53	14.91	-0.03
290	SLU 53	26	-2190	9149	162.22	15.54	-0.02
290	SLU 54	26	-2136	9022	158.65	15.43	-0.03
290	SLU 55	25	-2085	8888	155.19	15.25	-0.03
290	SLU 56	27	-2236	9338	165.88	15.88	-0.02
290	SLU 57	26	-2183	9211	162.31	15.77	-0.03
290	SLU 58	26	-2221	9288	164.79	15.78	-0.02
290	SLU 59	26	-2167	9161	161.22	15.67	-0.03
290	SLU 60	26	-2202	9233	163.19	15.68	-0.03
290	SLU 61	26	-2149	9105	159.61	15.57	-0.03
290	SLU 62	27	-2249	9421	166.84	16.02	-0.02
290	SLU 63	26	-2195	9294	163.27	15.91	-0.03
290	SLU 64	25	-2136	8923	158.07	15.12	-0.02
290	SLU 65	25	-2047	8711	152.12	14.94	-0.03
290	SLU 66	26	-2198	9161	162.81	15.57	-0.02
290	SLU 67	26	-2144	9034	159.24	15.46	-0.03
290	SLU 68	25	-2093	8899	155.77	15.29	-0.03
290	SLU 69	27	-2244	9350	166.47	15.91	-0.02
290	SLU 70	26	-2191	9222	162.89	15.81	-0.03
290	SLU 71	27	-2229	9300	165.38	15.81	-0.02
290	SLU 72	26	-2175	9173	161.81	15.7	-0.03
290	SLU 73	27	-2219	9461	165.42	16.32	-0.03
290	SLU 74	28	-2371	9911	176.12	16.94	-0.03
290	SLU 75	28	-2317	9784	172.54	16.83	-0.03
290	SLU 76	28	-2266	9649	169.08	16.66	-0.03
290	SLU 77	29	-2417	10099	179.77	17.29	-0.03
290	SLU 78	29	-2363	9972	176.2	17.18	-0.03
290	SLU 79	29	-2402	10050	178.68	17.18	-0.03
290	SLU 80	28	-2348	9923	175.11	17.08	-0.03
290	SLU 81	29	-2383	9994	177.08	17.08	-0.03
290	SLU 82	28	-2329	9867	173.51	16.98	-0.03
290	SLU 83	29	-2429	10183	180.73	17.43	-0.03
290	SLU 84	29	-2376	10055	177.16	17.32	-0.03
290	SLE RA 1	19	-1604	6696	118.54	11.32	-0.02
290	SLE RA 2	19	-1544	6555	114.57	11.2	-0.02
290	SLE RA 3	19	-1645	6855	121.7	11.62	-0.02
290	SLE RA 4	19	-1609	6770	119.32	11.55	-0.02
290	SLE RA 5	19	-1575	6681	117.01	11.43	-0.02
290	SLE RA 6	20	-1676	6981	124.14	11.85	-0.02
290	SLE RA 7	20	-1640	6896	121.75	11.78	-0.02
290	SLE RA 8	20	-1666	6948	123.41	11.78	-0.02
290	SLE RA 9	20	-1630	6863	121.03	11.71	-0.02
290	SLE RA 10	20	-1659	7055	123.44	12.12	-0.02
290	SLE RA 11	21	-1760	7355	130.57	12.54	-0.02
290	SLE RA 12	21	-1724	7270	128.19	12.46	-0.02
290	SLE RA 13	20	-1690	7181	125.88	12.35	-0.02
290	SLE RA 14	21	-1791	7481	133.01	12.77	-0.02
290	SLE RA 15	21	-1755	7396	130.62	12.69	-0.02
290	SLE RA 16	21	-1781	7448	132.28	12.7	-0.02
290	SLE RA 17	21	-1745	7363	129.9	12.63	-0.02
290	SLE RA 18	21	-1768	7411	131.21	12.63	-0.02
290	SLE RA 19	21	-1732	7326	128.83	12.56	-0.02
290	SLE RA 20	22	-1799	7536	133.65	12.86	-0.02
290	SLE RA 21	21	-1763	7451	131.27	12.79	-0.02
290	SLE FR 1	19	-1604	6696	118.54	11.32	-0.02

Nodo	Cont.	Reazione a traslazione			Reazione a rotazione		
Ind.	N.br.	x	y	z	x	y	z
290	SLE FR 2	19	-1592	6668	117.75	11.3	-0.02
290	SLE FR 3	19	-1616	6747	119.51	11.41	-0.02
290	SLE FR 4	20	-1641	6882	121.55	11.69	-0.02
290	SLE FR 5	20	-1665	6961	123.32	11.81	-0.02
290	SLE FR 6	20	-1686	7054	124.88	11.98	-0.02
290	SLE QP 1	19	-1604	6696	118.54	11.32	-0.02
290	SLE QP 2	20	-1653	6911	122.34	11.71	-0.02
290	SLD 1	21	-1809	8450	137.32	17	-0.41
290	SLD 2	21	-1809	8450	137.32	17	-0.41
290	SLD 3	30	-2156	9449	160.74	21.65	-0.28
290	SLD 4	30	-2156	9449	160.74	21.65	-0.28
290	SLD 5	8	-1174	5856	91.32	6.25	-0.33
290	SLD 6	8	-1174	5856	91.32	6.25	-0.33
290	SLD 7	35	-2330	9188	169.38	21.75	0.09
290	SLD 8	35	-2330	9188	169.38	21.75	0.09
290	SLD 9	4	-976	4633	75.3	1.68	-0.13
290	SLD 10	4	-976	4633	75.3	1.68	-0.13
290	SLD 11	32	-2132	7965	153.37	17.18	0.29
290	SLD 12	32	-2132	7965	153.37	17.18	0.29
290	SLD 13	9	-1150	4372	83.94	1.78	0.25
290	SLD 14	9	-1150	4372	83.94	1.78	0.25
290	SLD 15	18	-1497	5372	107.36	6.43	0.37
290	SLD 16	18	-1497	5372	107.36	6.43	0.37
290	SLV 1	23	-2016	10512	157.2	23.86	-0.94
290	SLV 2	23	-2016	10512	157.2	23.86	-0.94
290	SLV 3	44	-2834	12877	212.66	35.36	-0.64
290	SLV 4	44	-2834	12877	212.66	35.36	-0.64
290	SLV 5	-10	-520	4404	48.69	-2.08	-0.76
290	SLV 6	-10	-520	4404	48.69	-2.08	-0.76
290	SLV 7	58	-3249	12288	233.55	36.25	0.26
290	SLV 8	58	-3249	12288	233.55	36.25	0.26
290	SLV 9	-19	-57	1533	11.13	-12.82	-0.3
290	SLV 10	-19	-57	1533	11.13	-12.82	-0.3
290	SLV 11	50	-2786	9418	196	25.51	0.72
290	SLV 12	50	-2786	9418	196	25.51	0.72
290	SLV 13	-5	-472	944	32.02	-11.93	0.6
290	SLV 14	-5	-472	944	32.02	-11.93	0.6
290	SLV 15	16	-1291	3310	87.48	-0.43	0.91
290	SLV 16	16	-1291	3310	87.48	-0.43	0.91
291	SLU 1	1	-371	3926	18.51	0.84	0
291	SLU 2	1	-370	3926	18.46	0.85	0
291	SLU 3	1	-384	4044	19.14	0.88	0
291	SLU 4	1	-384	4044	19.1	0.88	0
291	SLU 5	1	-378	4000	18.81	0.86	0
291	SLU 6	1	-392	4119	19.49	0.89	0
291	SLU 7	1	-391	4119	19.46	0.89	0
291	SLU 8	1	-387	4075	19.23	0.88	0
291	SLU 9	1	-386	4075	19.19	0.88	0
291	SLU 10	1	-427	4477	21.25	0.96	0
291	SLU 11	1	-442	4595	21.93	0.99	0
291	SLU 12	1	-441	4595	21.89	0.99	0
291	SLU 13	1	-435	4551	21.6	0.98	0
291	SLU 14	1	-449	4669	22.28	1.01	0
291	SLU 15	1	-448	4669	22.25	1.01	0
291	SLU 16	1	-444	4625	22.02	1	0
291	SLU 17	1	-443	4625	21.98	1	0
291	SLU 18	1	-453	4713	22.5	1.01	0
291	SLU 19	1	-452	4713	22.47	1.01	0
291	SLU 20	1	-461	4787	22.86	1.03	0
291	SLU 21	1	-460	4787	22.82	1.03	0
291	SLU 22	1	-427	4453	21.23	0.96	0
291	SLU 23	1	-426	4453	21.17	0.96	0
291	SLU 24	1	-440	4571	21.85	0.99	0
291	SLU 25	1	-439	4571	21.81	0.99	0
291	SLU 26	1	-433	4527	21.52	0.98	0
291	SLU 27	1	-448	4645	22.2	1.01	0
291	SLU 28	1	-447	4645	22.17	1.01	0
291	SLU 29	1	-442	4601	21.94	1	0
291	SLU 30	1	-441	4601	21.9	1	0
291	SLU 31	1	-483	5003	23.96	1.08	0
291	SLU 32	1	-497	5121	24.64	1.11	0.01
291	SLU 33	1	-496	5121	24.6	1.11	0.01
291	SLU 34	1	-490	5077	24.32	1.1	0.01
291	SLU 35	1	-505	5195	24.99	1.13	0.01
291	SLU 36	1	-504	5195	24.96	1.13	0.01
291	SLU 37	1	-499	5151	24.73	1.11	0.01
291	SLU 38	1	-498	5151	24.69	1.11	0.01
291	SLU 39	1	-508	5239	25.21	1.13	0.01
291	SLU 40	1	-508	5239	25.18	1.13	0.01
291	SLU 41	1	-516	5313	25.57	1.15	0.01
291	SLU 42	1	-515	5313	25.53	1.15	0.01
291	SLU 43	1	-464	4924	23.14	1.06	0
291	SLU 44	1	-462	4924	23.08	1.06	0
291	SLU 45	1	-477	5042	23.76	1.09	0
291	SLU 46	1	-476	5042	23.73	1.09	0
291	SLU 47	1	-470	4998	23.44	1.08	0
291	SLU 48	1	-484	5116	24.12	1.11	0
291	SLU 49	1	-484	5116	24.08	1.11	0
291	SLU 50	1	-479	5072	23.85	1.09	0
291	SLU 51	1	-478	5072	23.82	1.09	0

Nodo	Cont.	Reazione a traslazione			Reazione a rotazione		
Ind.	N.br.	x	y	z	x	y	z
291	SLU 52	1	-520	5474	25.87	1.17	0.01
291	SLU 53	1	-534	5592	26.55	1.2	0.01
291	SLU 54	1	-533	5592	26.52	1.2	0.01
291	SLU 55	1	-527	5548	26.23	1.19	0.01
291	SLU 56	1	-542	5666	26.91	1.22	0.01
291	SLU 57	1	-541	5666	26.87	1.22	0.01
291	SLU 58	1	-536	5623	26.64	1.21	0.01
291	SLU 59	1	-535	5623	26.61	1.21	0.01
291	SLU 60	1	-545	5710	27.13	1.22	0.01
291	SLU 61	1	-545	5710	27.09	1.22	0.01
291	SLU 62	1	-553	5784	27.48	1.24	0.01
291	SLU 63	1	-552	5784	27.45	1.24	0.01
291	SLU 64	1	-519	5450	25.85	1.18	0.01
291	SLU 65	1	-518	5450	25.79	1.18	0.01
291	SLU 66	1	-532	5568	26.47	1.21	0.01
291	SLU 67	1	-532	5568	26.44	1.21	0.01
291	SLU 68	1	-526	5524	26.15	1.19	0.01
291	SLU 69	1	-540	5642	26.83	1.22	0.01
291	SLU 70	1	-539	5642	26.79	1.22	0.01
291	SLU 71	1	-535	5598	26.56	1.21	0.01
291	SLU 72	1	-534	5598	26.53	1.21	0.01
291	SLU 73	1	-575	6000	28.59	1.29	0.01
291	SLU 74	1	-589	6119	29.26	1.32	0.01
291	SLU 75	1	-589	6119	29.23	1.32	0.01
291	SLU 76	1	-583	6075	28.94	1.31	0.01
291	SLU 77	1	-597	6193	29.62	1.34	0.01
291	SLU 78	1	-596	6193	29.59	1.34	0.01
291	SLU 79	1	-592	6149	29.35	1.33	0.01
291	SLU 80	1	-591	6149	29.32	1.33	0.01
291	SLU 81	1	-601	6236	29.84	1.34	0.01
291	SLU 82	1	-600	6236	29.8	1.34	0.01
291	SLU 83	1	-608	6311	30.19	1.36	0.01
291	SLU 84	1	-608	6311	30.16	1.36	0.01
291	SLE RA 1	1	-387	4077	19.29	0.88	0
291	SLE RA 2	1	-386	4077	19.25	0.88	0
291	SLE RA 3	1	-396	4155	19.7	0.9	0
291	SLE RA 4	1	-395	4155	19.68	0.9	0
291	SLE RA 5	1	-391	4126	19.49	0.89	0
291	SLE RA 6	1	-401	4205	19.94	0.91	0
291	SLE RA 7	1	-401	4205	19.92	0.91	0
291	SLE RA 8	1	-397	4176	19.76	0.9	0
291	SLE RA 9	1	-397	4176	19.74	0.9	0
291	SLE RA 10	1	-424	4444	21.11	0.96	0
291	SLE RA 11	1	-434	4522	21.56	0.98	0
291	SLE RA 12	1	-433	4522	21.54	0.98	0
291	SLE RA 13	1	-430	4493	21.35	0.97	0
291	SLE RA 14	1	-439	4572	21.8	0.99	0
291	SLE RA 15	1	-439	4572	21.78	0.99	0
291	SLE RA 16	1	-435	4543	21.62	0.98	0
291	SLE RA 17	1	-435	4543	21.6	0.98	0
291	SLE RA 18	1	-442	4601	21.95	0.99	0
291	SLE RA 19	1	-441	4601	21.93	0.99	0
291	SLE RA 20	1	-447	4650	22.18	1	0
291	SLE RA 21	1	-446	4650	22.16	1	0
291	SLE FR 1	1	-387	4077	19.29	0.88	0
291	SLE FR 2	1	-387	4077	19.28	0.88	0
291	SLE FR 3	1	-389	4096	19.38	0.88	0
291	SLE FR 4	1	-403	4234	20.08	0.91	0
291	SLE FR 5	1	-406	4254	20.18	0.92	0
291	SLE FR 6	1	-414	4339	20.62	0.93	0
291	SLE QP 1	1	-387	4077	19.29	0.88	0
291	SLE QP 2	1	-404	4234	20.09	0.91	0
291	SLD 1	-1	-38	3689	1.5	4.01	0.02
291	SLD 2	-1	-38	3689	1.5	4.01	0.02
291	SLD 3	-2	-583	4140	29.37	2.59	0.01
291	SLD 4	-2	-583	4140	29.37	2.59	0.01
291	SLD 5	3	533	3385	-27.75	3.99	0.01
291	SLD 6	3	533	3385	-27.75	3.99	0.01
291	SLD 7	-3	-1284	4891	65.14	-0.74	0
291	SLD 8	-3	-1284	4891	65.14	-0.74	0
291	SLD 9	4	477	3577	-24.96	2.56	0.01
291	SLD 10	4	477	3577	-24.96	2.56	0.01
291	SLD 11	-1	-1340	5082	67.93	-2.17	-0.01
291	SLD 12	-1	-1340	5082	67.93	-2.17	-0.01
291	SLD 13	4	-224	4328	10.8	-0.77	0
291	SLD 14	4	-224	4328	10.8	-0.77	0
291	SLD 15	3	-769	4779	38.67	-2.19	-0.01
291	SLD 16	3	-769	4779	38.67	-2.19	-0.01
291	SLV 1	-3	473	2944	-24.48	8.3	0.03
291	SLV 2	-3	473	2944	-24.48	8.3	0.03
291	SLV 3	-7	-834	4028	42.37	4.71	0.02
291	SLV 4	-7	-834	4028	42.37	4.71	0.02
291	SLV 5	6	1842	2203	-94.68	8.57	0.03
291	SLV 6	6	1842	2203	-94.68	8.57	0.03
291	SLV 7	-8	-2515	5816	128.17	-3.39	0
291	SLV 8	-8	-2515	5816	128.17	-3.39	0
291	SLV 9	10	1708	2652	-87.99	5.21	0.01
291	SLV 10	10	1708	2652	-87.99	5.21	0.01
291	SLV 11	-4	-2649	6265	134.85	-6.75	-0.02
291	SLV 12	-4	-2649	6265	134.85	-6.75	-0.02

Nodo	Cont.	Reazione a traslazione			Reazione a rotazione		
Ind.	N.br.	x	y	z	x	y	z
291	SLV 13	9	27	4440	-2.2	-2.89	-0.01
291	SLV 14	9	27	4440	-2.2	-2.89	-0.01
291	SLV 15	5	-1280	5523	64.65	-6.48	-0.02
291	SLV 16	5	-1280	5523	64.65	-6.48	-0.02
292	SLU 1	-13	-1227	5787	64.83	-2.41	0.06
292	SLU 2	-12	-1138	5592	60.2	-2.44	0.06
292	SLU 3	-13	-1268	6025	67.14	-2.54	0.06
292	SLU 4	-13	-1215	5908	64.37	-2.56	0.06
292	SLU 5	-13	-1165	5786	61.78	-2.55	0.06
292	SLU 6	-14	-1295	6219	68.72	-2.66	0.07
292	SLU 7	-14	-1242	6102	65.94	-2.67	0.07
292	SLU 8	-14	-1280	6175	67.98	-2.64	0.07
292	SLU 9	-13	-1227	6058	65.21	-2.65	0.06
292	SLU 10	-14	-1285	6281	68.16	-2.74	0.07
292	SLU 11	-15	-1415	6714	75.1	-2.85	0.07
292	SLU 12	-15	-1361	6597	72.33	-2.87	0.07
292	SLU 13	-14	-1311	6475	69.74	-2.86	0.07
292	SLU 14	-15	-1441	6908	76.68	-2.97	0.07
292	SLU 15	-15	-1388	6791	73.9	-2.98	0.07
292	SLU 16	-15	-1427	6863	75.94	-2.95	0.07
292	SLU 17	-15	-1373	6746	73.16	-2.96	0.07
292	SLU 18	-15	-1436	6771	76.2	-2.85	0.07
292	SLU 19	-15	-1383	6654	73.43	-2.87	0.07
292	SLU 20	-15	-1463	6965	77.78	-2.97	0.07
292	SLU 21	-15	-1409	6848	75	-2.98	0.07
292	SLU 22	-14	-1375	6479	72.85	-2.74	0.07
292	SLU 23	-14	-1286	6284	68.22	-2.76	0.07
292	SLU 24	-15	-1416	6716	75.16	-2.87	0.07
292	SLU 25	-15	-1363	6599	72.38	-2.88	0.07
292	SLU 26	-14	-1313	6477	69.8	-2.87	0.07
292	SLU 27	-15	-1443	6910	76.73	-2.98	0.07
292	SLU 28	-15	-1389	6793	73.96	-3	0.07
292	SLU 29	-15	-1428	6866	76	-2.96	0.07
292	SLU 30	-15	-1375	6749	73.22	-2.98	0.07
292	SLU 31	-15	-1432	6972	76.18	-3.07	0.07
292	SLU 32	-16	-1563	7405	83.12	-3.18	0.08
292	SLU 33	-16	-1509	7288	80.34	-3.19	0.08
292	SLU 34	-16	-1459	7166	77.75	-3.18	0.08
292	SLU 35	-17	-1589	7599	84.69	-3.29	0.08
292	SLU 36	-16	-1536	7482	81.92	-3.3	0.08
292	SLU 37	-17	-1575	7555	83.96	-3.27	0.08
292	SLU 38	-16	-1521	7438	81.18	-3.28	0.08
292	SLU 39	-16	-1584	7463	84.22	-3.18	0.08
292	SLU 40	-16	-1531	7345	81.44	-3.19	0.08
292	SLU 41	-17	-1611	7656	85.79	-3.29	0.08
292	SLU 42	-17	-1557	7539	83.02	-3.3	0.08
292	SLU 43	-16	-1545	7287	81.53	-3.02	0.08
292	SLU 44	-16	-1456	7092	76.91	-3.05	0.08
292	SLU 45	-17	-1586	7525	83.84	-3.16	0.08
292	SLU 46	-16	-1533	7407	81.07	-3.17	0.08
292	SLU 47	-16	-1482	7285	78.48	-3.16	0.08
292	SLU 48	-17	-1613	7718	85.42	-3.27	0.08
292	SLU 49	-17	-1559	7601	82.64	-3.28	0.08
292	SLU 50	-17	-1598	7674	84.68	-3.25	0.08
292	SLU 51	-17	-1545	7557	81.91	-3.26	0.08
292	SLU 52	-17	-1602	7780	84.86	-3.36	0.08
292	SLU 53	-18	-1732	8213	91.8	-3.47	0.09
292	SLU 54	-18	-1679	8096	89.03	-3.48	0.09
292	SLU 55	-18	-1629	7974	86.44	-3.47	0.09
292	SLU 56	-19	-1759	8407	93.38	-3.58	0.09
292	SLU 57	-18	-1705	8290	90.6	-3.59	0.09
292	SLU 58	-18	-1744	8363	92.64	-3.56	0.09
292	SLU 59	-18	-1691	8246	89.87	-3.57	0.09
292	SLU 60	-18	-1754	8271	92.9	-3.46	0.09
292	SLU 61	-18	-1700	8154	90.13	-3.48	0.09
292	SLU 62	-19	-1780	8464	94.48	-3.58	0.09
292	SLU 63	-18	-1727	8347	91.7	-3.59	0.09
292	SLU 64	-18	-1693	7978	89.55	-3.35	0.09
292	SLU 65	-17	-1604	7783	84.92	-3.37	0.08
292	SLU 66	-18	-1734	8216	91.86	-3.48	0.09
292	SLU 67	-18	-1680	8099	89.08	-3.5	0.09
292	SLU 68	-18	-1630	7976	86.5	-3.48	0.09
292	SLU 69	-19	-1760	8409	93.44	-3.59	0.09
292	SLU 70	-18	-1707	8292	90.66	-3.61	0.09
292	SLU 71	-19	-1746	8365	92.7	-3.57	0.09
292	SLU 72	-18	-1692	8248	89.92	-3.59	0.09
292	SLU 73	-19	-1750	8472	92.88	-3.68	0.09
292	SLU 74	-20	-1880	8904	99.82	-3.79	0.1
292	SLU 75	-19	-1827	8787	97.04	-3.8	0.09
292	SLU 76	-19	-1776	8665	94.46	-3.79	0.09
292	SLU 77	-20	-1907	9098	101.39	-3.9	0.1
292	SLU 78	-20	-1853	8981	98.62	-3.92	0.1
292	SLU 79	-20	-1892	9054	100.66	-3.88	0.1
292	SLU 80	-20	-1839	8937	97.88	-3.9	0.1
292	SLU 81	-20	-1902	8962	100.92	-3.79	0.1
292	SLU 82	-20	-1848	8845	98.14	-3.8	0.09
292	SLU 83	-20	-1928	9155	102.49	-3.9	0.1
292	SLU 84	-20	-1875	9038	99.72	-3.92	0.1
292	SLE RA 1	-13	-1270	5985	67.12	-2.5	0.06
292	SLE RA 2	-13	-1210	5855	64.04	-2.52	0.06

Nodo	Cont.	Reazione a traslazione			Reazione a rotazione		
Ind.	N.br.	x	y	z	x	y	z
292	SLE RA 3	-14	-1297	6143	68.66	-2.59	0.07
292	SLE RA 4	-13	-1261	6065	66.81	-2.6	0.07
292	SLE RA 5	-13	-1228	5984	65.09	-2.6	0.06
292	SLE RA 6	-14	-1315	6273	69.71	-2.67	0.07
292	SLE RA 7	-14	-1279	6195	67.86	-2.68	0.07
292	SLE RA 8	-14	-1305	6243	69.22	-2.65	0.07
292	SLE RA 9	-14	-1269	6165	67.37	-2.66	0.07
292	SLE RA 10	-14	-1308	6314	69.34	-2.73	0.07
292	SLE RA 11	-15	-1395	6603	73.97	-2.8	0.07
292	SLE RA 12	-14	-1359	6525	72.12	-2.81	0.07
292	SLE RA 13	-14	-1325	6443	70.39	-2.8	0.07
292	SLE RA 14	-15	-1412	6732	75.02	-2.87	0.07
292	SLE RA 15	-15	-1377	6654	73.17	-2.88	0.07
292	SLE RA 16	-15	-1403	6702	74.53	-2.86	0.07
292	SLE RA 17	-15	-1367	6624	72.68	-2.87	0.07
292	SLE RA 18	-15	-1409	6641	74.7	-2.8	0.07
292	SLE RA 19	-14	-1373	6563	72.85	-2.81	0.07
292	SLE RA 20	-15	-1427	6770	75.75	-2.87	0.07
292	SLE RA 21	-15	-1391	6692	73.9	-2.88	0.07
292	SLE FR 1	-13	-1270	5985	67.12	-2.5	0.06
292	SLE FR 2	-13	-1258	5959	66.51	-2.51	0.06
292	SLE FR 3	-13	-1277	6037	67.54	-2.53	0.07
292	SLE FR 4	-14	-1299	6156	68.78	-2.6	0.07
292	SLE FR 5	-14	-1318	6233	69.82	-2.62	0.07
292	SLE FR 6	-14	-1339	6313	70.91	-2.65	0.07
292	SLE QP 1	-13	-1270	5985	67.12	-2.5	0.06
292	SLE QP 2	-14	-1311	6182	69.4	-2.59	0.07
292	SLD 1	-2	-871	3679	44.8	4.68	0.02
292	SLD 2	-2	-871	3679	44.8	4.68	0.02
292	SLD 3	-14	-1209	4657	62.83	0.03	0.06
292	SLD 4	-14	-1209	4657	62.83	0.03	0.06
292	SLD 5	8	-667	3947	34.67	6.65	0
292	SLD 6	8	-667	3947	34.67	6.65	0
292	SLD 7	-32	-1793	7209	94.77	-8.87	0.12
292	SLD 8	-32	-1793	7209	94.77	-8.87	0.12
292	SLD 9	4	-830	5155	44.02	3.68	0.02
292	SLD 10	4	-830	5155	44.02	3.68	0.02
292	SLD 11	-35	-1956	8417	104.12	-11.84	0.13
292	SLD 12	-35	-1956	8417	104.12	-11.84	0.13
292	SLD 13	-14	-1414	7706	75.97	-5.21	0.08
292	SLD 14	-14	-1414	7706	75.97	-5.21	0.08
292	SLD 15	-25	-1752	8685	94	-9.87	0.11
292	SLD 16	-25	-1752	8685	94	-9.87	0.11
292	SLV 1	15	-280	308	11.74	15.25	-0.04
292	SLV 2	15	-280	308	11.74	15.25	-0.04
292	SLV 3	-15	-1073	2622	54.08	3.48	0.04
292	SLV 4	-15	-1073	2622	54.08	3.48	0.04
292	SLV 5	40	200	910	-12.12	20.62	-0.1
292	SLV 6	40	200	910	-12.12	20.62	-0.1
292	SLV 7	-59	-2442	8623	129.02	-18.63	0.19
292	SLV 8	-59	-2442	8623	129.02	-18.63	0.19
292	SLV 9	32	-181	3740	9.77	13.44	-0.06
292	SLV 10	32	-181	3740	9.77	13.44	-0.06
292	SLV 11	-67	-2823	11453	150.91	-25.8	0.23
292	SLV 12	-67	-2823	11453	150.91	-25.8	0.23
292	SLV 13	-12	-1550	9742	84.71	-8.66	0.09
292	SLV 14	-12	-1550	9742	84.71	-8.66	0.09
292	SLV 15	-42	-2342	12056	127.06	-20.44	0.18
292	SLV 16	-42	-2342	12056	127.06	-20.44	0.18
293	SLU 1	7	-454	2611	46.97	5.11	0.01
293	SLU 2	7	-453	2610	46.91	5.1	0.01
293	SLU 3	7	-472	2686	48.79	5.3	0.01
293	SLU 4	7	-471	2686	48.75	5.3	0.01
293	SLU 5	7	-464	2659	48.1	5.23	0.01
293	SLU 6	7	-483	2735	49.98	5.43	0.01
293	SLU 7	7	-482	2735	49.94	5.42	0.01
293	SLU 8	7	-477	2709	49.35	5.36	0.01
293	SLU 9	7	-476	2708	49.31	5.35	0.01
293	SLU 10	8	-522	2964	53.84	5.94	0.01
293	SLU 11	8	-541	3040	55.72	6.14	0.01
293	SLU 12	8	-540	3040	55.68	6.13	0.01
293	SLU 13	8	-533	3013	55.03	6.06	0.01
293	SLU 14	9	-552	3089	56.91	6.26	0.01
293	SLU 15	9	-551	3088	56.87	6.26	0.01
293	SLU 16	8	-546	3063	56.29	6.19	0.01
293	SLU 17	8	-545	3062	56.25	6.19	0.01
293	SLU 18	9	-553	3117	56.88	6.3	0.01
293	SLU 19	9	-552	3116	56.84	6.3	0.01
293	SLU 20	9	-564	3166	58.07	6.43	0.01
293	SLU 21	9	-563	3165	58.03	6.42	0.01
293	SLU 22	8	-522	2947	53.86	5.92	0.01
293	SLU 23	8	-521	2946	53.8	5.91	0.01
293	SLU 24	8	-540	3022	55.68	6.11	0.01
293	SLU 25	8	-539	3021	55.64	6.11	0.01
293	SLU 26	8	-532	2995	54.99	6.04	0.01
293	SLU 27	9	-551	3071	56.87	6.24	0.01
293	SLU 28	9	-550	3070	56.83	6.24	0.01
293	SLU 29	8	-545	3045	56.24	6.17	0.01
293	SLU 30	8	-544	3044	56.21	6.17	0.01
293	SLU 31	9	-590	3300	60.73	6.75	0.01

Nodo	Cont.	Reazione a traslazione			Reazione a rotazione		
Ind.	N.br.	x	y	z	x	y	z
293	SLU 32	10	-609	3376	62.61	6.95	0.01
293	SLU 33	10	-608	3375	62.58	6.95	0.01
293	SLU 34	9	-601	3349	61.93	6.88	0.01
293	SLU 35	10	-620	3425	63.8	7.08	0.01
293	SLU 36	10	-619	3424	63.77	7.07	0.01
293	SLU 37	10	-614	3399	63.18	7.01	0.01
293	SLU 38	10	-613	3398	63.14	7	0.01
293	SLU 39	10	-621	3453	63.77	7.12	0.01
293	SLU 40	10	-620	3452	63.73	7.11	0.01
293	SLU 41	10	-632	3502	64.96	7.24	0.01
293	SLU 42	10	-631	3501	64.92	7.24	0.01
293	SLU 43	9	-567	3280	58.7	6.36	0.01
293	SLU 44	9	-566	3278	58.63	6.35	0.01
293	SLU 45	9	-585	3355	60.51	6.55	0.01
293	SLU 46	9	-584	3354	60.48	6.55	0.01
293	SLU 47	9	-577	3327	59.82	6.48	0.01
293	SLU 48	9	-596	3404	61.7	6.68	0.01
293	SLU 49	9	-595	3403	61.67	6.68	0.01
293	SLU 50	9	-590	3377	61.08	6.61	0.01
293	SLU 51	9	-589	3376	61.04	6.61	0.01
293	SLU 52	10	-635	3632	65.57	7.19	0.01
293	SLU 53	10	-654	3709	67.45	7.39	0.01
293	SLU 54	10	-653	3708	67.41	7.39	0.01
293	SLU 55	10	-646	3681	66.76	7.32	0.01
293	SLU 56	10	-665	3757	68.64	7.52	0.01
293	SLU 57	10	-664	3757	68.6	7.51	0.01
293	SLU 58	10	-659	3731	68.01	7.45	0.01
293	SLU 59	10	-658	3730	67.98	7.44	0.01
293	SLU 60	10	-666	3785	68.61	7.55	0.01
293	SLU 61	10	-665	3784	68.57	7.55	0.01
293	SLU 62	11	-677	3834	69.8	7.68	0.01
293	SLU 63	11	-676	3833	69.76	7.68	0.01
293	SLU 64	10	-635	3615	65.59	7.17	0.01
293	SLU 65	10	-634	3614	65.53	7.17	0.01
293	SLU 66	10	-653	3691	67.41	7.37	0.01
293	SLU 67	10	-652	3690	67.37	7.36	0.01
293	SLU 68	10	-645	3663	66.72	7.29	0.01
293	SLU 69	10	-664	3739	68.6	7.49	0.01
293	SLU 70	10	-663	3739	68.56	7.49	0.01
293	SLU 71	10	-658	3713	67.97	7.42	0.01
293	SLU 72	10	-657	3712	67.93	7.42	0.01
293	SLU 73	11	-703	3968	72.46	8	0.01
293	SLU 74	11	-722	4044	74.34	8.2	0.01
293	SLU 75	11	-721	4044	74.3	8.2	0.01
293	SLU 76	11	-714	4017	73.65	8.13	0.01
293	SLU 77	11	-733	4093	75.53	8.33	0.01
293	SLU 78	11	-732	4092	75.49	8.33	0.01
293	SLU 79	11	-727	4067	74.91	8.26	0.01
293	SLU 80	11	-726	4066	74.87	8.26	0.01
293	SLU 81	11	-734	4121	75.5	8.37	0.01
293	SLU 82	11	-733	4120	75.46	8.37	0.01
293	SLU 83	12	-745	4170	76.69	8.49	0.01
293	SLU 84	12	-744	4169	76.65	8.49	0.01
293	SLE RA 1	7	-474	2707	48.94	5.34	0.01
293	SLE RA 2	7	-473	2706	48.9	5.34	0.01
293	SLE RA 3	8	-485	2757	50.15	5.47	0.01
293	SLE RA 4	8	-485	2757	50.12	5.47	0.01
293	SLE RA 5	7	-480	2739	49.69	5.42	0.01
293	SLE RA 6	8	-493	2790	50.94	5.55	0.01
293	SLE RA 7	8	-492	2789	50.92	5.55	0.01
293	SLE RA 8	8	-489	2772	50.53	5.51	0.01
293	SLE RA 9	8	-488	2772	50.5	5.5	0.01
293	SLE RA 10	8	-519	2942	53.52	5.89	0.01
293	SLE RA 11	8	-531	2993	54.77	6.03	0.01
293	SLE RA 12	8	-531	2993	54.75	6.02	0.01
293	SLE RA 13	8	-526	2975	54.31	5.98	0.01
293	SLE RA 14	8	-539	3026	55.57	6.11	0.01
293	SLE RA 15	8	-538	3025	55.54	6.11	0.01
293	SLE RA 16	8	-535	3008	55.15	6.06	0.01
293	SLE RA 17	8	-534	3008	55.12	6.06	0.01
293	SLE RA 18	8	-539	3044	55.54	6.14	0.01
293	SLE RA 19	8	-539	3044	55.52	6.13	0.01
293	SLE RA 20	9	-547	3077	56.34	6.22	0.01
293	SLE RA 21	9	-546	3076	56.31	6.22	0.01
293	SLE FR 1	7	-474	2707	48.94	5.34	0.01
293	SLE FR 2	7	-473	2707	48.93	5.34	0.01
293	SLE FR 3	7	-477	2720	49.26	5.37	0.01
293	SLE FR 4	8	-493	2808	50.91	5.58	0.01
293	SLE FR 5	8	-496	2821	51.24	5.61	0.01
293	SLE FR 6	8	-506	2876	52.24	5.74	0.01
293	SLE QP 1	7	-474	2707	48.94	5.34	0.01
293	SLE QP 2	8	-493	2808	50.92	5.58	0.01
293	SLD 1	12	-417	2921	47.36	8.75	0.01
293	SLD 2	12	-417	2921	47.36	8.75	0.01
293	SLD 3	14	-852	3127	72.25	10.39	0.02
293	SLD 4	14	-852	3127	72.25	10.39	0.02
293	SLD 5	6	189	2529	12.11	4.04	0
293	SLD 6	6	189	2529	12.11	4.04	0
293	SLD 7	12	-1260	3217	95.06	9.51	0.02
293	SLD 8	12	-1260	3217	95.06	9.51	0.02

Nodo	Cont.	Reazione a traslazione			Reazione a rotazione		
Ind.	N.br.	x	y	z	x	y	z
293	SLD 9	3	273	2400	6.78	1.65	0
293	SLD 10	3	273	2400	6.78	1.65	0
293	SLD 11	9	-1175	3087	89.73	7.11	0.01
293	SLD 12	9	-1175	3087	89.73	7.11	0.01
293	SLD 13	1	-135	2490	29.59	0.77	0
293	SLD 14	1	-135	2490	29.59	0.77	0
293	SLD 15	3	-569	2696	54.48	2.41	0
293	SLD 16	3	-569	2696	54.48	2.41	0
293	SLV 1	18	-303	3067	41.83	12.94	0.02
293	SLV 2	18	-303	3067	41.83	12.94	0.02
293	SLV 3	23	-1351	3559	101.88	16.9	0.03
293	SLV 4	23	-1351	3559	101.88	16.9	0.03
293	SLV 5	4	1152	2141	-42.87	1.78	0
293	SLV 6	4	1152	2141	-42.87	1.78	0
293	SLV 7	19	-2339	3778	157.28	14.98	0.03
293	SLV 8	19	-2339	3778	157.28	14.98	0.03
293	SLV 9	-4	1352	1838	-55.44	-3.82	-0.01
293	SLV 10	-4	1352	1838	-55.44	-3.82	-0.01
293	SLV 11	12	-2139	3476	144.72	9.38	0.02
293	SLV 12	12	-2139	3476	144.72	9.38	0.02
293	SLV 13	-7	364	2058	-0.04	-5.74	-0.01
293	SLV 14	-7	364	2058	-0.04	-5.74	-0.01
293	SLV 15	-3	-683	2549	60.01	-1.78	0
293	SLV 16	-3	-683	2549	60.01	-1.78	0
294	SLU 1	-6	380	2428	-4.84	-0.36	0.18
294	SLU 2	-6	380	2425	-4.79	-0.36	0.18
294	SLU 3	-6	391	2502	-4.93	-0.37	0.18
294	SLU 4	-6	391	2501	-4.91	-0.37	0.18
294	SLU 5	-6	387	2475	-4.84	-0.37	0.18
294	SLU 6	-7	399	2552	-4.98	-0.38	0.19
294	SLU 7	-7	398	2550	-4.95	-0.38	0.19
294	SLU 8	-7	395	2527	-4.94	-0.38	0.19
294	SLU 9	-7	394	2525	-4.91	-0.38	0.19
294	SLU 10	-7	436	2773	-5.59	-0.42	0.2
294	SLU 11	-7	447	2850	-5.73	-0.43	0.21
294	SLU 12	-7	447	2848	-5.7	-0.43	0.21
294	SLU 13	-7	443	2822	-5.63	-0.43	0.21
294	SLU 14	-8	455	2899	-5.77	-0.44	0.21
294	SLU 15	-8	454	2898	-5.75	-0.44	0.21
294	SLU 16	-7	451	2875	-5.73	-0.43	0.21
294	SLU 17	-7	450	2873	-5.7	-0.43	0.21
294	SLU 18	-8	460	2925	-5.97	-0.44	0.21
294	SLU 19	-8	460	2923	-5.94	-0.44	0.21
294	SLU 20	-8	468	2974	-6.02	-0.45	0.22
294	SLU 21	-8	467	2972	-5.99	-0.45	0.22
294	SLU 22	-7	433	2761	-5.54	-0.42	0.2
294	SLU 23	-7	432	2758	-5.49	-0.42	0.2
294	SLU 24	-7	444	2835	-5.63	-0.43	0.21
294	SLU 25	-7	444	2834	-5.6	-0.43	0.21
294	SLU 26	-7	440	2808	-5.54	-0.42	0.21
294	SLU 27	-8	451	2885	-5.68	-0.43	0.21
294	SLU 28	-8	451	2883	-5.65	-0.44	0.21
294	SLU 29	-7	448	2860	-5.63	-0.43	0.21
294	SLU 30	-7	447	2858	-5.6	-0.43	0.21
294	SLU 31	-8	489	3106	-6.28	-0.47	0.23
294	SLU 32	-8	500	3183	-6.42	-0.48	0.23
294	SLU 33	-8	500	3181	-6.39	-0.48	0.23
294	SLU 34	-8	496	3155	-6.33	-0.48	0.23
294	SLU 35	-8	508	3232	-6.47	-0.49	0.24
294	SLU 36	-8	507	3230	-6.44	-0.49	0.24
294	SLU 37	-8	504	3207	-6.42	-0.49	0.24
294	SLU 38	-8	503	3206	-6.4	-0.49	0.24
294	SLU 39	-8	513	3257	-6.67	-0.49	0.24
294	SLU 40	-8	513	3256	-6.64	-0.5	0.24
294	SLU 41	-9	520	3307	-6.72	-0.5	0.24
294	SLU 42	-9	520	3305	-6.69	-0.5	0.24
294	SLU 43	-8	476	3042	-6.06	-0.45	0.22
294	SLU 44	-8	476	3040	-6.01	-0.46	0.22
294	SLU 45	-8	487	3117	-6.15	-0.46	0.23
294	SLU 46	-8	487	3115	-6.12	-0.47	0.23
294	SLU 47	-8	483	3089	-6.06	-0.46	0.23
294	SLU 48	-8	495	3166	-6.2	-0.47	0.23
294	SLU 49	-8	494	3164	-6.17	-0.47	0.23
294	SLU 50	-8	491	3141	-6.15	-0.47	0.23
294	SLU 51	-8	490	3140	-6.13	-0.47	0.23
294	SLU 52	-9	532	3387	-6.8	-0.51	0.25
294	SLU 53	-9	543	3464	-6.94	-0.52	0.25
294	SLU 54	-9	543	3462	-6.91	-0.52	0.25
294	SLU 55	-9	539	3437	-6.85	-0.52	0.25
294	SLU 56	-9	551	3514	-6.99	-0.53	0.26
294	SLU 57	-9	550	3512	-6.96	-0.53	0.26
294	SLU 58	-9	547	3489	-6.95	-0.52	0.26
294	SLU 59	-9	546	3487	-6.92	-0.52	0.26
294	SLU 60	-9	556	3539	-7.19	-0.53	0.26
294	SLU 61	-9	556	3537	-7.16	-0.53	0.26
294	SLU 62	-9	564	3588	-7.24	-0.54	0.26
294	SLU 63	-9	563	3587	-7.21	-0.54	0.26
294	SLU 64	-9	529	3375	-6.75	-0.51	0.25
294	SLU 65	-9	528	3373	-6.7	-0.51	0.25
294	SLU 66	-9	540	3449	-6.84	-0.52	0.25

Nodo	Cont.	Reazione a traslazione			Reazione a rotazione		
Ind.	N.br.	x	y	z	x	y	z
294	SLU 67	-9	540	3448	-6.81	-0.52	0.25
294	SLU 68	-9	536	3422	-6.75	-0.52	0.25
294	SLU 69	-9	547	3499	-6.89	-0.52	0.26
294	SLU 70	-9	547	3497	-6.86	-0.53	0.26
294	SLU 71	-9	544	3474	-6.85	-0.52	0.25
294	SLU 72	-9	543	3473	-6.82	-0.52	0.25
294	SLU 73	-10	584	3720	-7.49	-0.56	0.27
294	SLU 74	-10	596	3797	-7.63	-0.57	0.28
294	SLU 75	-10	596	3795	-7.61	-0.57	0.28
294	SLU 76	-10	592	3770	-7.54	-0.57	0.28
294	SLU 77	-10	603	3846	-7.68	-0.58	0.28
294	SLU 78	-10	603	3845	-7.65	-0.58	0.28
294	SLU 79	-10	600	3822	-7.64	-0.58	0.28
294	SLU 80	-10	599	3820	-7.61	-0.58	0.28
294	SLU 81	-10	609	3872	-7.88	-0.59	0.28
294	SLU 82	-10	609	3870	-7.85	-0.59	0.28
294	SLU 83	-10	616	3921	-7.93	-0.59	0.29
294	SLU 84	-10	616	3920	-7.9	-0.59	0.29
294	SLE RA 1	-7	395	2523	-5.04	-0.38	0.18
294	SLE RA 2	-7	395	2521	-5.01	-0.38	0.18
294	SLE RA 3	-7	403	2573	-5.1	-0.39	0.19
294	SLE RA 4	-7	403	2572	-5.08	-0.39	0.19
294	SLE RA 5	-7	400	2554	-5.04	-0.38	0.19
294	SLE RA 6	-7	408	2606	-5.13	-0.39	0.19
294	SLE RA 7	-7	407	2605	-5.12	-0.39	0.19
294	SLE RA 8	-7	405	2589	-5.11	-0.39	0.19
294	SLE RA 9	-7	405	2588	-5.09	-0.39	0.19
294	SLE RA 10	-7	432	2753	-5.54	-0.42	0.2
294	SLE RA 11	-7	440	2804	-5.63	-0.42	0.21
294	SLE RA 12	-7	440	2803	-5.61	-0.42	0.21
294	SLE RA 13	-7	437	2786	-5.57	-0.42	0.2
294	SLE RA 14	-7	445	2837	-5.66	-0.43	0.21
294	SLE RA 15	-7	445	2836	-5.64	-0.43	0.21
294	SLE RA 16	-7	442	2821	-5.63	-0.42	0.21
294	SLE RA 17	-7	442	2820	-5.61	-0.43	0.21
294	SLE RA 18	-7	449	2854	-5.79	-0.43	0.21
294	SLE RA 19	-7	448	2853	-5.78	-0.43	0.21
294	SLE RA 20	-7	454	2887	-5.83	-0.44	0.21
294	SLE RA 21	-7	453	2886	-5.81	-0.44	0.21
294	SLE FR 1	-7	395	2523	-5.04	-0.38	0.18
294	SLE FR 2	-7	395	2523	-5.03	-0.38	0.18
294	SLE FR 3	-7	397	2536	-5.05	-0.38	0.19
294	SLE FR 4	-7	411	2622	-5.26	-0.39	0.19
294	SLE FR 5	-7	413	2636	-5.28	-0.4	0.19
294	SLE FR 6	-7	422	2689	-5.42	-0.4	0.2
294	SLE QP 1	-7	395	2523	-5.04	-0.38	0.18
294	SLE QP 2	-7	411	2622	-5.27	-0.39	0.19
294	SLD 1	-7	395	2472	-11.29	-0.1	0.11
294	SLD 2	-7	395	2472	-11.29	-0.1	0.11
294	SLD 3	-10	280	2030	-4.24	-0.36	0.19
294	SLD 4	-10	280	2030	-4.24	-0.36	0.19
294	SLD 5	-2	579	3247	-17.76	0.09	0.05
294	SLD 6	-2	579	3247	-17.76	0.09	0.05
294	SLD 7	-12	199	1775	5.73	-0.78	0.31
294	SLD 8	-12	199	1775	5.73	-0.78	0.31
294	SLD 9	-1	624	3470	-16.27	-0.01	0.08
294	SLD 10	-1	624	3470	-16.27	-0.01	0.08
294	SLD 11	-11	244	1998	7.23	-0.88	0.33
294	SLD 12	-11	244	1998	7.23	-0.88	0.33
294	SLD 13	-4	542	3215	-6.29	-0.43	0.2
294	SLD 14	-4	542	3215	-6.29	-0.43	0.2
294	SLD 15	-6	428	2773	0.75	-0.69	0.27
294	SLD 16	-6	428	2773	0.75	-0.69	0.27
294	SLV 1	-7	375	2286	-19.72	0.32	0
294	SLV 2	-7	375	2286	-19.72	0.32	0
294	SLV 3	-15	98	1203	-2.78	-0.33	0.18
294	SLV 4	-15	98	1203	-2.78	-0.33	0.18
294	SLV 5	4	820	4164	-35.3	0.8	-0.15
294	SLV 6	4	820	4164	-35.3	0.8	-0.15
294	SLV 7	-20	-102	554	21.18	-1.36	0.47
294	SLV 8	-20	-102	554	21.18	-1.36	0.47
294	SLV 9	6	925	4691	-31.71	0.57	-0.09
294	SLV 10	6	925	4691	-31.71	0.57	-0.09
294	SLV 11	-17	3	1081	24.77	-1.59	0.53
294	SLV 12	-17	3	1081	24.77	-1.59	0.53
294	SLV 13	1	725	4042	-7.76	-0.46	0.2
294	SLV 14	1	725	4042	-7.76	-0.46	0.2
294	SLV 15	-6	448	2959	9.19	-1.11	0.39
294	SLV 16	-6	448	2959	9.19	-1.11	0.39
295	SLU 1	1	-518	3909	17	1.01	-0.01
295	SLU 2	1	-519	3926	17.22	0.99	-0.01
295	SLU 3	2	-536	4006	17.57	1.03	-0.01
295	SLU 4	2	-537	4016	17.71	1.03	-0.01
295	SLU 5	1	-532	3975	17.62	1.01	-0.01
295	SLU 6	2	-548	4055	17.98	1.05	-0.01
295	SLU 7	2	-549	4065	18.11	1.04	-0.01
295	SLU 8	2	-542	4008	17.81	1.03	-0.01
295	SLU 9	2	-543	4018	17.94	1.02	-0.01
295	SLU 10	2	-596	4439	19.47	1.15	-0.01
295	SLU 11	2	-613	4519	19.82	1.19	-0.01

Nodo	Cont.	Reazione a traslazione			Reazione a rotazione		
Ind.	N.br.	x	y	z	x	y	z
295	SLU 12	2	-614	4529	19.96	1.18	-0.01
295	SLU 13	2	-608	4488	19.87	1.16	-0.01
295	SLU 14	2	-625	4568	20.23	1.2	-0.01
295	SLU 15	2	-626	4578	20.36	1.2	-0.01
295	SLU 16	2	-619	4521	20.06	1.19	-0.01
295	SLU 17	2	-619	4531	20.19	1.18	-0.01
295	SLU 18	2	-627	4642	20.21	1.23	-0.01
295	SLU 19	2	-628	4652	20.34	1.22	-0.01
295	SLU 20	2	-639	4692	20.62	1.24	-0.01
295	SLU 21	2	-640	4701	20.75	1.23	-0.01
295	SLU 22	2	-593	4405	19.24	1.15	-0.01
295	SLU 23	2	-594	4421	19.46	1.14	-0.01
295	SLU 24	2	-611	4501	19.82	1.18	-0.01
295	SLU 25	2	-612	4511	19.95	1.17	-0.01
295	SLU 26	2	-607	4471	19.87	1.15	-0.01
295	SLU 27	2	-623	4551	20.22	1.2	-0.01
295	SLU 28	2	-624	4561	20.36	1.19	-0.01
295	SLU 29	2	-617	4503	20.05	1.18	-0.01
295	SLU 30	2	-618	4513	20.18	1.17	-0.01
295	SLU 31	2	-671	4934	21.71	1.3	-0.01
295	SLU 32	2	-688	5014	22.07	1.34	-0.01
295	SLU 33	2	-689	5024	22.2	1.33	-0.01
295	SLU 34	2	-683	4984	22.12	1.31	-0.01
295	SLU 35	2	-700	5064	22.47	1.35	-0.01
295	SLU 36	2	-701	5074	22.61	1.34	-0.01
295	SLU 37	2	-694	5017	22.3	1.34	-0.01
295	SLU 38	2	-694	5027	22.43	1.33	-0.01
295	SLU 39	2	-702	5138	22.45	1.38	-0.01
295	SLU 40	2	-703	5148	22.59	1.37	-0.01
295	SLU 41	2	-714	5187	22.86	1.39	-0.01
295	SLU 42	2	-715	5197	22.99	1.38	-0.01
295	SLU 43	2	-648	4912	21.33	1.26	-0.01
295	SLU 44	2	-649	4928	21.55	1.24	-0.01
295	SLU 45	2	-666	5009	21.9	1.28	-0.01
295	SLU 46	2	-667	5019	22.04	1.28	-0.01
295	SLU 47	2	-661	4978	21.95	1.26	-0.01
295	SLU 48	2	-678	5058	22.31	1.3	-0.01
295	SLU 49	2	-679	5068	22.44	1.29	-0.01
295	SLU 50	2	-672	5011	22.14	1.28	-0.01
295	SLU 51	2	-673	5021	22.27	1.28	-0.01
295	SLU 52	2	-726	5442	23.8	1.4	-0.01
295	SLU 53	2	-742	5522	24.15	1.44	-0.01
295	SLU 54	2	-743	5532	24.29	1.43	-0.01
295	SLU 55	2	-738	5491	24.2	1.41	-0.01
295	SLU 56	2	-754	5571	24.56	1.45	-0.01
295	SLU 57	2	-755	5581	24.69	1.45	-0.01
295	SLU 58	2	-748	5524	24.39	1.44	-0.01
295	SLU 59	2	-749	5534	24.52	1.43	-0.01
295	SLU 60	2	-757	5645	24.54	1.48	-0.01
295	SLU 61	2	-758	5655	24.67	1.47	-0.01
295	SLU 62	2	-769	5694	24.94	1.49	-0.01
295	SLU 63	2	-770	5704	25.08	1.49	-0.01
295	SLU 64	2	-723	5407	23.57	1.4	-0.01
295	SLU 65	2	-724	5424	23.79	1.39	-0.01
295	SLU 66	2	-741	5504	24.15	1.43	-0.01
295	SLU 67	2	-742	5514	24.28	1.43	-0.01
295	SLU 68	2	-736	5473	24.2	1.41	-0.01
295	SLU 69	2	-753	5554	24.55	1.45	-0.01
295	SLU 70	2	-754	5563	24.69	1.44	-0.01
295	SLU 71	2	-747	5506	24.38	1.43	-0.01
295	SLU 72	2	-748	5516	24.51	1.42	-0.01
295	SLU 73	2	-801	5937	26.04	1.55	-0.01
295	SLU 74	2	-817	6017	26.4	1.59	-0.01
295	SLU 75	2	-818	6027	26.53	1.58	-0.01
295	SLU 76	2	-813	5986	26.45	1.56	-0.01
295	SLU 77	2	-829	6067	26.8	1.6	-0.01
295	SLU 78	2	-830	6077	26.94	1.6	-0.01
295	SLU 79	2	-823	6019	26.63	1.59	-0.01
295	SLU 80	2	-824	6029	26.76	1.58	-0.01
295	SLU 81	2	-832	6140	26.78	1.63	-0.01
295	SLU 82	2	-833	6150	26.92	1.62	-0.01
295	SLU 83	2	-844	6190	27.19	1.64	-0.01
295	SLU 84	2	-845	6200	27.32	1.63	-0.01
295	SLE RA 1	2	-539	4051	17.64	1.05	-0.01
295	SLE RA 2	2	-540	4062	17.79	1.04	-0.01
295	SLE RA 3	2	-552	4115	18.02	1.07	-0.01
295	SLE RA 4	2	-552	4122	18.11	1.06	-0.01
295	SLE RA 5	2	-548	4095	18.06	1.05	-0.01
295	SLE RA 6	2	-560	4148	18.29	1.08	-0.01
295	SLE RA 7	2	-560	4155	18.38	1.07	-0.01
295	SLE RA 8	2	-555	4117	18.18	1.07	-0.01
295	SLE RA 9	2	-556	4123	18.27	1.06	-0.01
295	SLE RA 10	2	-591	4404	19.28	1.14	-0.01
295	SLE RA 11	2	-602	4457	19.52	1.17	-0.01
295	SLE RA 12	2	-603	4464	19.61	1.17	-0.01
295	SLE RA 13	2	-599	4437	19.55	1.15	-0.01
295	SLE RA 14	2	-611	4490	19.79	1.18	-0.01
295	SLE RA 15	2	-611	4497	19.88	1.17	-0.01
295	SLE RA 16	2	-606	4459	19.68	1.17	-0.01
295	SLE RA 17	2	-607	4465	19.77	1.17	-0.01

Nodo	Cont.	Reazione a traslazione			Reazione a rotazione		
Ind.	N.br.	x	y	z	x	y	z
295	SLE RA 18	2	-612	4539	19.78	1.2	-0.01
295	SLE RA 19	2	-613	4546	19.87	1.19	-0.01
295	SLE RA 20	2	-620	4572	20.05	1.21	-0.01
295	SLE RA 21	2	-621	4579	20.14	1.2	-0.01
295	SLE FR 1	2	-539	4051	17.64	1.05	-0.01
295	SLE FR 2	2	-540	4053	17.67	1.05	-0.01
295	SLE FR 3	2	-543	4064	17.75	1.05	-0.01
295	SLE FR 4	2	-561	4199	18.31	1.09	-0.01
295	SLE FR 5	2	-564	4210	18.39	1.1	-0.01
295	SLE FR 6	2	-576	4295	18.71	1.12	-0.01
295	SLE QP 1	2	-539	4051	17.64	1.05	-0.01
295	SLE QP 2	2	-561	4197	18.28	1.09	-0.01
295	SLD 1	-8	-551	4351	16.44	-5.05	0.03
295	SLD 2	-8	-551	4351	16.44	-5.05	0.03
295	SLD 3	-10	-871	5541	36.75	-5.86	0.03
295	SLD 4	-10	-871	5541	36.75	-5.86	0.03
295	SLD 5	1	-73	2439	-13.07	0.47	-0.01
295	SLD 6	1	-73	2439	-13.07	0.47	-0.01
295	SLD 7	-4	-1139	6405	54.62	-2.21	0.01
295	SLD 8	-4	-1139	6405	54.62	-2.21	0.01
295	SLD 9	7	17	1990	-18.06	4.4	-0.03
295	SLD 10	7	17	1990	-18.06	4.4	-0.03
295	SLD 11	2	-1049	5955	49.63	1.71	-0.01
295	SLD 12	2	-1049	5955	49.63	1.71	-0.01
295	SLD 13	13	-251	2854	-0.19	8.04	-0.04
295	SLD 14	13	-251	2854	-0.19	8.04	-0.04
295	SLD 15	11	-571	4043	20.12	7.24	-0.04
295	SLD 16	11	-571	4043	20.12	7.24	-0.04
295	SLV 1	-21	-534	4550	13.73	-13.33	0.07
295	SLV 2	-21	-534	4550	13.73	-13.33	0.07
295	SLV 3	-25	-1297	7374	62.17	-15.34	0.09
295	SLV 4	-25	-1297	7374	62.17	-15.34	0.09
295	SLV 5	1	603	20	-56.56	-0.18	0
295	SLV 6	1	603	20	-56.56	-0.18	0
295	SLV 7	-12	-1938	9433	104.92	-6.89	0.04
295	SLV 8	-12	-1938	9433	104.92	-6.89	0.04
295	SLV 9	16	815	-1039	-68.36	9.08	-0.06
295	SLV 10	16	815	-1039	-68.36	9.08	-0.06
295	SLV 11	2	-1725	8374	93.12	2.36	-0.01
295	SLV 12	2	-1725	8374	93.12	2.36	-0.01
295	SLV 13	28	174	1020	-25.61	17.53	-0.1
295	SLV 14	28	174	1020	-25.61	17.53	-0.1
295	SLV 15	24	-588	3844	22.83	15.51	-0.08
295	SLV 16	24	-588	3844	22.83	15.51	-0.08
296	SLU 1	2	-87	2597	-23.27	3.02	0.01
296	SLU 2	2	-86	2596	-23.35	3.02	0.01
296	SLU 3	2	-90	2671	-24.2	3.14	0.01
296	SLU 4	2	-89	2670	-24.25	3.14	0.01
296	SLU 5	2	-87	2645	-24	3.09	0.01
296	SLU 6	2	-91	2719	-24.84	3.21	0.01
296	SLU 7	2	-90	2719	-24.89	3.21	0.01
296	SLU 8	2	-90	2694	-24.55	3.17	0.01
296	SLU 9	2	-89	2693	-24.61	3.17	0.01
296	SLU 10	2	-98	2950	-26.68	3.52	0.01
296	SLU 11	2	-103	3024	-27.53	3.64	0.01
296	SLU 12	2	-102	3024	-27.58	3.63	0.01
296	SLU 13	2	-100	2998	-27.33	3.59	0.01
296	SLU 14	2	-104	3073	-28.17	3.71	0.01
296	SLU 15	2	-103	3072	-28.22	3.71	0.01
296	SLU 16	2	-103	3047	-27.88	3.67	0.01
296	SLU 17	2	-102	3047	-27.94	3.67	0.01
296	SLU 18	2	-105	3102	-28.02	3.73	0.01
296	SLU 19	2	-104	3101	-28.08	3.73	0.01
296	SLU 20	2	-107	3150	-28.67	3.81	0.01
296	SLU 21	2	-106	3150	-28.72	3.81	0.01
296	SLU 22	2	-99	2931	-26.65	3.51	0.01
296	SLU 23	2	-97	2930	-26.74	3.5	0.01
296	SLU 24	2	-102	3005	-27.58	3.62	0.01
296	SLU 25	2	-101	3004	-27.64	3.62	0.01
296	SLU 26	2	-99	2979	-27.39	3.58	0.01
296	SLU 27	2	-103	3053	-28.23	3.69	0.01
296	SLU 28	2	-102	3053	-28.28	3.69	0.01
296	SLU 29	2	-102	3028	-27.94	3.65	0.01
296	SLU 30	2	-101	3027	-28	3.65	0.01
296	SLU 31	3	-110	3284	-30.07	4	0.01
296	SLU 32	3	-115	3358	-30.91	4.12	0.01
296	SLU 33	3	-114	3358	-30.97	4.12	0.01
296	SLU 34	3	-111	3332	-30.72	4.07	0.01
296	SLU 35	3	-116	3407	-31.56	4.19	0.01
296	SLU 36	3	-115	3406	-31.61	4.19	0.01
296	SLU 37	3	-114	3381	-31.27	4.15	0.01
296	SLU 38	3	-113	3381	-31.33	4.15	0.01
296	SLU 39	3	-117	3436	-31.41	4.22	0.01
296	SLU 40	3	-116	3435	-31.47	4.22	0.01
296	SLU 41	3	-119	3484	-32.06	4.29	0.01
296	SLU 42	3	-118	3484	-32.11	4.29	0.01
296	SLU 43	2	-109	3262	-29.08	3.77	0.01
296	SLU 44	2	-108	3261	-29.17	3.76	0.01
296	SLU 45	3	-112	3336	-30.01	3.88	0.01
296	SLU 46	3	-111	3335	-30.07	3.88	0.01

Nodo	Cont.	Reazione a traslazione			Reazione a rotazione		
Ind.	N.br.	x	y	z	x	y	z
296	SLU 47	2	-109	3309	-29.82	3.84	0.01
296	SLU 48	3	-114	3384	-30.66	3.95	0.01
296	SLU 49	3	-113	3384	-30.71	3.95	0.01
296	SLU 50	3	-112	3359	-30.37	3.91	0.01
296	SLU 51	3	-111	3358	-30.42	3.91	0.01
296	SLU 52	3	-120	3614	-32.5	4.26	0.01
296	SLU 53	3	-125	3689	-33.34	4.38	0.01
296	SLU 54	3	-124	3689	-33.4	4.38	0.01
296	SLU 55	3	-122	3663	-33.15	4.33	0.01
296	SLU 56	3	-126	3737	-33.99	4.45	0.02
296	SLU 57	3	-125	3737	-34.04	4.45	0.02
296	SLU 58	3	-125	3712	-33.7	4.41	0.02
296	SLU 59	3	-124	3712	-33.75	4.41	0.02
296	SLU 60	3	-127	3767	-33.84	4.48	0.02
296	SLU 61	3	-126	3766	-33.89	4.48	0.02
296	SLU 62	3	-129	3815	-34.48	4.55	0.02
296	SLU 63	3	-128	3815	-34.54	4.55	0.02
296	SLU 64	3	-121	3596	-32.47	4.25	0.01
296	SLU 65	3	-120	3595	-32.56	4.25	0.01
296	SLU 66	3	-124	3670	-33.4	4.36	0.01
296	SLU 67	3	-123	3669	-33.46	4.36	0.01
296	SLU 68	3	-121	3643	-33.21	4.32	0.01
296	SLU 69	3	-125	3718	-34.05	4.44	0.02
296	SLU 70	3	-124	3717	-34.1	4.43	0.02
296	SLU 71	3	-124	3693	-33.76	4.39	0.02
296	SLU 72	3	-123	3692	-33.81	4.39	0.02
296	SLU 73	3	-132	3948	-35.89	4.74	0.02
296	SLU 74	3	-137	4023	-36.73	4.86	0.02
296	SLU 75	3	-136	4022	-36.79	4.86	0.02
296	SLU 76	3	-134	3997	-36.54	4.82	0.02
296	SLU 77	3	-138	4071	-37.38	4.93	0.02
296	SLU 78	3	-137	4071	-37.43	4.93	0.02
296	SLU 79	3	-137	4046	-37.09	4.89	0.02
296	SLU 80	3	-136	4045	-37.14	4.89	0.02
296	SLU 81	3	-139	4101	-37.23	4.96	0.02
296	SLU 82	3	-138	4100	-37.28	4.96	0.02
296	SLU 83	3	-141	4149	-37.87	5.03	0.02
296	SLU 84	3	-140	4148	-37.93	5.03	0.02
296	SLE RA 1	2	-91	2693	-24.23	3.16	0.01
296	SLE RA 2	2	-90	2692	-24.29	3.16	0.01
296	SLE RA 3	2	-93	2742	-24.85	3.24	0.01
296	SLE RA 4	2	-92	2741	-24.89	3.24	0.01
296	SLE RA 5	2	-90	2724	-24.72	3.21	0.01
296	SLE RA 6	2	-93	2774	-25.28	3.29	0.01
296	SLE RA 7	2	-93	2774	-25.32	3.29	0.01
296	SLE RA 8	2	-92	2757	-25.09	3.26	0.01
296	SLE RA 9	2	-92	2757	-25.13	3.26	0.01
296	SLE RA 10	2	-98	2928	-26.51	3.49	0.01
296	SLE RA 11	2	-101	2977	-27.07	3.57	0.01
296	SLE RA 12	2	-100	2977	-27.11	3.57	0.01
296	SLE RA 13	2	-99	2960	-26.94	3.54	0.01
296	SLE RA 14	2	-102	3010	-27.5	3.62	0.01
296	SLE RA 15	2	-101	3009	-27.54	3.62	0.01
296	SLE RA 16	2	-101	2993	-27.31	3.59	0.01
296	SLE RA 17	2	-100	2992	-27.35	3.59	0.01
296	SLE RA 18	2	-103	3029	-27.41	3.64	0.01
296	SLE RA 19	2	-102	3029	-27.44	3.63	0.01
296	SLE RA 20	2	-104	3061	-27.83	3.68	0.01
296	SLE RA 21	2	-103	3061	-27.87	3.68	0.01
296	SLE FR 1	2	-91	2693	-24.23	3.16	0.01
296	SLE FR 2	2	-90	2692	-24.25	3.16	0.01
296	SLE FR 3	2	-91	2705	-24.41	3.18	0.01
296	SLE FR 4	2	-94	2793	-25.2	3.3	0.01
296	SLE FR 5	2	-95	2806	-25.36	3.32	0.01
296	SLE FR 6	2	-97	2861	-25.82	3.4	0.01
296	SLE QP 1	2	-91	2693	-24.23	3.16	0.01
296	SLE QP 2	2	-94	2793	-25.19	3.3	0.01
296	SLD 1	4	-10	2849	-29.92	5.25	0.02
296	SLD 2	4	-10	2849	-29.92	5.25	0.02
296	SLD 3	4	-401	3150	-12.99	6.17	0.02
296	SLD 4	4	-401	3150	-12.99	6.17	0.02
296	SLD 5	2	525	2354	-52.29	2.49	0.01
296	SLD 6	2	525	2354	-52.29	2.49	0.01
296	SLD 7	4	-780	3356	4.15	5.56	0.02
296	SLD 8	4	-780	3356	4.15	5.56	0.02
296	SLD 9	0	591	2231	-54.52	1.05	0
296	SLD 10	0	591	2231	-54.52	1.05	0
296	SLD 11	3	-713	3233	1.92	4.12	0.02
296	SLD 12	3	-713	3233	1.92	4.12	0.02
296	SLD 13	0	212	2437	-37.38	0.44	0
296	SLD 14	0	212	2437	-37.38	0.44	0
296	SLD 15	1	-179	2738	-20.45	1.36	0
296	SLD 16	1	-179	2738	-20.45	1.36	0
296	SLV 1	6	113	2917	-36.51	7.81	0.03
296	SLV 2	6	113	2917	-36.51	7.81	0.03
296	SLV 3	7	-828	3637	4.05	10.04	0.04
296	SLV 4	7	-828	3637	4.05	10.04	0.04
296	SLV 5	1	1396	1738	-90.11	1.28	0
296	SLV 6	1	1396	1738	-90.11	1.28	0
296	SLV 7	6	-1743	4138	45.11	8.7	0.04

Nodo	Cont.	Reazione a traslazione			Reazione a rotazione		
Ind.	N.br.	x	y	z	x	y	z
296	SLV 8	6	-1743	4138	45.11	8.7	0.04
296	SLV 9	-2	1554	1449	-95.48	-2.1	-0.01
296	SLV 10	-2	1554	1449	-95.48	-2.1	-0.01
296	SLV 11	4	-1585	3849	39.74	5.33	0.02
296	SLV 12	4	-1585	3849	39.74	5.33	0.02
296	SLV 13	-3	640	1950	-54.42	-3.43	-0.02
296	SLV 14	-3	640	1950	-54.42	-3.43	-0.02
296	SLV 15	-1	-302	2670	-13.86	-1.2	-0.01
296	SLV 16	-1	-302	2670	-13.86	-1.2	-0.01
297	SLU 1	741	-1271	7324	32.99	20.54	-0.12
297	SLU 2	723	-1204	7050	30.58	20.32	-0.1
297	SLU 3	767	-1319	7595	34.18	21.24	-0.13
297	SLU 4	756	-1279	7430	32.74	21.11	-0.12
297	SLU 5	744	-1241	7265	31.48	20.9	-0.11
297	SLU 6	787	-1356	7810	35.08	21.81	-0.13
297	SLU 7	777	-1316	7646	33.63	21.68	-0.12
297	SLU 8	783	-1345	7755	34.78	21.69	-0.13
297	SLU 9	772	-1305	7590	33.33	21.56	-0.12
297	SLU 10	822	-1349	7921	34.22	23.29	-0.11
297	SLU 11	865	-1464	8467	37.82	24.21	-0.14
297	SLU 12	855	-1424	8302	36.37	24.08	-0.13
297	SLU 13	843	-1386	8137	35.11	23.87	-0.12
297	SLU 14	886	-1501	8682	38.71	24.78	-0.14
297	SLU 15	875	-1461	8517	37.27	24.65	-0.13
297	SLU 16	881	-1490	8626	38.41	24.66	-0.14
297	SLU 17	871	-1450	8462	36.97	24.53	-0.13
297	SLU 18	882	-1478	8569	38.18	24.78	-0.13
297	SLU 19	872	-1438	8405	36.74	24.65	-0.12
297	SLU 20	903	-1515	8785	39.08	25.36	-0.14
297	SLU 21	892	-1475	8620	37.63	25.23	-0.13
297	SLU 22	838	-1420	8207	36.73	23.4	-0.13
297	SLU 23	820	-1353	7933	34.32	23.18	-0.11
297	SLU 24	863	-1468	8478	37.92	24.1	-0.14
297	SLU 25	852	-1428	8314	36.48	23.97	-0.13
297	SLU 26	841	-1390	8148	35.22	23.76	-0.12
297	SLU 27	884	-1505	8694	38.82	24.67	-0.14
297	SLU 28	873	-1465	8529	37.37	24.54	-0.13
297	SLU 29	879	-1494	8638	38.52	24.55	-0.14
297	SLU 30	868	-1454	8473	37.07	24.42	-0.13
297	SLU 31	919	-1498	8805	37.96	26.15	-0.12
297	SLU 32	962	-1613	9350	41.56	27.07	-0.15
297	SLU 33	951	-1573	9185	40.11	26.94	-0.14
297	SLU 34	939	-1535	9020	38.85	26.73	-0.13
297	SLU 35	983	-1650	9565	42.45	27.64	-0.15
297	SLU 36	972	-1610	9400	41.01	27.51	-0.14
297	SLU 37	978	-1639	9510	42.15	27.52	-0.15
297	SLU 38	967	-1599	9345	40.71	27.39	-0.14
297	SLU 39	979	-1627	9453	41.92	27.64	-0.14
297	SLU 40	968	-1587	9288	40.48	27.51	-0.13
297	SLU 41	1000	-1664	9668	42.81	28.22	-0.15
297	SLU 42	989	-1624	9503	41.37	28.09	-0.14
297	SLU 43	931	-1601	9219	41.6	25.72	-0.16
297	SLU 44	913	-1534	8944	39.2	25.51	-0.14
297	SLU 45	956	-1649	9489	42.8	26.42	-0.16
297	SLU 46	945	-1609	9325	41.36	26.29	-0.15
297	SLU 47	933	-1571	9160	40.09	26.08	-0.14
297	SLU 48	977	-1686	9705	43.69	27	-0.16
297	SLU 49	966	-1646	9540	42.25	26.87	-0.15
297	SLU 50	972	-1675	9649	43.39	26.88	-0.16
297	SLU 51	961	-1635	9485	41.95	26.74	-0.15
297	SLU 52	1011	-1679	9816	42.83	28.48	-0.15
297	SLU 53	1055	-1794	10361	46.43	29.39	-0.17
297	SLU 54	1044	-1754	10196	44.99	29.26	-0.16
297	SLU 55	1032	-1716	10031	43.73	29.05	-0.15
297	SLU 56	1075	-1831	10576	47.33	29.97	-0.17
297	SLU 57	1065	-1791	10412	45.88	29.84	-0.16
297	SLU 58	1071	-1820	10521	47.03	29.85	-0.17
297	SLU 59	1060	-1780	10356	45.58	29.71	-0.16
297	SLU 60	1072	-1808	10464	46.8	29.97	-0.17
297	SLU 61	1061	-1768	10299	45.35	29.84	-0.16
297	SLU 62	1092	-1845	10679	47.69	30.54	-0.17
297	SLU 63	1082	-1805	10514	46.25	30.41	-0.16
297	SLU 64	1027	-1750	10102	45.34	28.58	-0.17
297	SLU 65	1009	-1683	9827	42.94	28.36	-0.15
297	SLU 66	1053	-1798	10373	46.54	29.28	-0.17
297	SLU 67	1042	-1758	10208	45.09	29.15	-0.16
297	SLU 68	1030	-1720	10043	43.83	28.94	-0.15
297	SLU 69	1073	-1835	10588	47.43	29.85	-0.18
297	SLU 70	1062	-1795	10423	45.99	29.72	-0.16
297	SLU 71	1069	-1824	10532	47.13	29.73	-0.17
297	SLU 72	1058	-1784	10368	45.69	29.6	-0.16
297	SLU 73	1108	-1828	10699	46.57	31.33	-0.16
297	SLU 74	1151	-1943	11244	50.17	32.25	-0.18
297	SLU 75	1140	-1903	11080	48.73	32.12	-0.17
297	SLU 76	1129	-1865	10914	47.47	31.91	-0.16
297	SLU 77	1172	-1980	11460	51.06	32.82	-0.18
297	SLU 78	1161	-1940	11295	49.62	32.69	-0.17
297	SLU 79	1167	-1969	11404	50.76	32.7	-0.18
297	SLU 80	1156	-1929	11239	49.32	32.57	-0.17
297	SLU 81	1168	-1957	11347	50.53	32.82	-0.18

Nodo	Cont.	Reazione a traslazione			Reazione a rotazione		
Ind.	N.br.	x	y	z	x	y	z
297	SLU 82	1157	-1917	11182	49.09	32.69	-0.17
297	SLU 83	1189	-1994	11562	51.43	33.4	-0.18
297	SLU 84	1178	-1954	11398	49.98	33.27	-0.17
297	SLE RA 1	769	-1313	7577	34.06	21.36	-0.13
297	SLE RA 2	757	-1269	7394	32.45	21.21	-0.11
297	SLE RA 3	786	-1345	7757	34.85	21.82	-0.13
297	SLE RA 4	779	-1319	7647	33.89	21.74	-0.12
297	SLE RA 5	771	-1294	7537	33.05	21.6	-0.12
297	SLE RA 6	800	-1370	7901	35.45	22.21	-0.13
297	SLE RA 7	792	-1343	7791	34.49	22.12	-0.12
297	SLE RA 8	796	-1363	7864	35.25	22.13	-0.13
297	SLE RA 9	789	-1336	7754	34.29	22.04	-0.12
297	SLE RA 10	823	-1366	7975	34.88	23.19	-0.12
297	SLE RA 11	852	-1442	8338	37.28	23.8	-0.13
297	SLE RA 12	844	-1415	8228	36.31	23.72	-0.13
297	SLE RA 13	837	-1390	8118	35.47	23.58	-0.12
297	SLE RA 14	865	-1467	8482	37.87	24.19	-0.14
297	SLE RA 15	858	-1440	8372	36.91	24.1	-0.13
297	SLE RA 16	862	-1459	8445	37.67	24.11	-0.14
297	SLE RA 17	855	-1433	8335	36.71	24.02	-0.13
297	SLE RA 18	863	-1451	8407	37.52	24.19	-0.13
297	SLE RA 19	856	-1425	8297	36.56	24.1	-0.13
297	SLE RA 20	877	-1476	8550	38.11	24.57	-0.14
297	SLE RA 21	870	-1449	8440	37.15	24.48	-0.13
297	SLE FR 1	769	-1313	7577	34.06	21.36	-0.13
297	SLE FR 2	767	-1304	7540	33.74	21.33	-0.12
297	SLE FR 3	774	-1323	7634	34.3	21.51	-0.13
297	SLE FR 4	795	-1346	7789	34.77	22.18	-0.13
297	SLE FR 5	803	-1365	7883	35.33	22.36	-0.13
297	SLE FR 6	816	-1382	7992	35.79	22.77	-0.13
297	SLE QP 1	769	-1313	7577	34.06	21.36	-0.13
297	SLE QP 2	797	-1355	7826	35.1	22.21	-0.13
297	SLD 1	1127	-1547	9636	38.32	34.51	0.05
297	SLD 2	1127	-1547	9636	38.32	34.51	0.05
297	SLD 3	1264	-1815	10919	48.57	38.86	-0.04
297	SLD 4	1264	-1815	10919	48.57	38.86	-0.04
297	SLD 5	689	-1005	6423	20.52	19.29	0.05
297	SLD 6	689	-1005	6423	20.52	19.29	0.05
297	SLD 7	1144	-1900	10700	54.68	33.81	-0.23
297	SLD 8	1144	-1900	10700	54.68	33.81	-0.23
297	SLD 9	450	-809	4952	15.51	10.61	-0.02
297	SLD 10	450	-809	4952	15.51	10.61	-0.02
297	SLD 11	905	-1705	9229	49.67	25.12	-0.31
297	SLD 12	905	-1705	9229	49.67	25.12	-0.31
297	SLD 13	331	-894	4732	21.62	5.55	-0.22
297	SLD 14	331	-894	4732	21.62	5.55	-0.22
297	SLD 15	467	-1163	6016	31.87	9.9	-0.3
297	SLD 16	467	-1163	6016	31.87	9.9	-0.3
297	SLV 1	1566	-1806	12062	42.72	50.84	0.28
297	SLV 2	1566	-1806	12062	42.72	50.84	0.28
297	SLV 3	1893	-2436	15094	66.75	61.32	0.08
297	SLV 4	1893	-2436	15094	66.75	61.32	0.08
297	SLV 5	530	-534	4497	0.94	14.9	0.31
297	SLV 6	530	-534	4497	0.94	14.9	0.31
297	SLV 7	1623	-2635	14606	81.04	49.84	-0.38
297	SLV 8	1623	-2635	14606	81.04	49.84	-0.38
297	SLV 9	-29	-74	1045	-10.84	-5.42	0.12
297	SLV 10	-29	-74	1045	-10.84	-5.42	0.12
297	SLV 11	1064	-2175	11154	69.25	29.51	-0.56
297	SLV 12	1064	-2175	11154	69.25	29.51	-0.56
297	SLV 13	-299	-273	557	3.44	-16.91	-0.33
297	SLV 14	-299	-273	557	3.44	-16.91	-0.33
297	SLV 15	29	-904	3590	27.47	-6.43	-0.54
297	SLV 16	29	-904	3590	27.47	-6.43	-0.54
298	SLU 1	2	3	5337	-4.98	-2	0.02
298	SLU 2	20	4	5155	-5.03	-1.27	0.02
298	SLU 3	-4	3	5530	-5.2	-2.42	0.02
298	SLU 4	7	4	5420	-5.24	-1.98	0.02
298	SLU 5	16	4	5308	-5.2	-1.56	0.02
298	SLU 6	-8	4	5683	-5.37	-2.71	0.02
298	SLU 7	3	4	5574	-5.41	-2.27	0.02
298	SLU 8	-6	4	5644	-5.32	-2.57	0.02
298	SLU 9	5	4	5535	-5.35	-2.14	0.02
298	SLU 10	39	4	5792	-5.66	-0.57	0.02
298	SLU 11	15	4	6167	-5.82	-1.72	0.02
298	SLU 12	26	4	6058	-5.86	-1.28	0.02
298	SLU 13	35	4	5946	-5.83	-0.86	0.02
298	SLU 14	12	4	6320	-5.99	-2	0.02
298	SLU 15	22	4	6211	-6.03	-1.57	0.02
298	SLU 16	14	4	6281	-5.94	-1.87	0.02
298	SLU 17	24	4	6172	-5.98	-1.44	0.02
298	SLU 18	29	4	6248	-5.87	-1	0.02
298	SLU 19	40	4	6139	-5.9	-0.56	0.02
298	SLU 20	26	4	6401	-6.04	-1.28	0.02
298	SLU 21	36	4	6292	-6.07	-0.85	0.02
298	SLU 22	14	4	5983	-5.63	-1.71	0.02
298	SLU 23	32	4	5800	-5.69	-0.98	0.02
298	SLU 24	8	4	6175	-5.85	-2.13	0.02
298	SLU 25	19	4	6066	-5.89	-1.69	0.02
298	SLU 26	28	4	5954	-5.86	-1.27	0.02

Nodo	Cont.	Reazione a traslazione			Reazione a rotazione		
Ind.	N.br.	x	y	z	x	y	z
298	SLU 27	4	4	6328	-6.03	-2.41	0.02
298	SLU 28	15	4	6219	-6.06	-1.98	0.02
298	SLU 29	6	4	6289	-5.97	-2.28	0.02
298	SLU 30	17	4	6180	-6.01	-1.85	0.02
298	SLU 31	51	5	6438	-6.31	-0.28	0.02
298	SLU 32	27	4	6812	-6.48	-1.42	0.02
298	SLU 33	38	5	6703	-6.51	-0.99	0.02
298	SLU 34	47	5	6591	-6.48	-0.57	0.02
298	SLU 35	23	5	6966	-6.65	-1.71	0.02
298	SLU 36	34	5	6856	-6.68	-1.28	0.02
298	SLU 37	25	4	6927	-6.59	-1.58	0.02
298	SLU 38	36	5	6817	-6.63	-1.15	0.02
298	SLU 39	41	4	6893	-6.52	-0.7	0.02
298	SLU 40	52	5	6784	-6.55	-0.27	0.02
298	SLU 41	37	5	7046	-6.69	-0.99	0.03
298	SLU 42	48	5	6937	-6.73	-0.56	0.02
298	SLU 43	-2	4	6718	-6.25	-2.7	0.02
298	SLU 44	16	4	6535	-6.3	-1.97	0.02
298	SLU 45	-7	4	6910	-6.47	-3.12	0.03
298	SLU 46	3	4	6800	-6.5	-2.68	0.02
298	SLU 47	12	5	6688	-6.47	-2.26	0.02
298	SLU 48	-11	4	7063	-6.64	-3.4	0.03
298	SLU 49	-1	5	6954	-6.67	-2.97	0.02
298	SLU 50	-9	4	7024	-6.59	-3.27	0.03
298	SLU 51	1	5	6915	-6.62	-2.84	0.02
298	SLU 52	35	5	7172	-6.93	-1.27	0.02
298	SLU 53	12	5	7547	-7.09	-2.41	0.03
298	SLU 54	22	5	7438	-7.13	-1.98	0.03
298	SLU 55	32	5	7326	-7.1	-1.56	0.02
298	SLU 56	8	5	7700	-7.26	-2.7	0.03
298	SLU 57	19	5	7591	-7.3	-2.27	0.03
298	SLU 58	10	5	7661	-7.21	-2.57	0.03
298	SLU 59	21	5	7552	-7.24	-2.14	0.03
298	SLU 60	26	5	7628	-7.14	-1.69	0.03
298	SLU 61	36	5	7519	-7.17	-1.26	0.03
298	SLU 62	22	5	7781	-7.31	-1.98	0.03
298	SLU 63	33	5	7672	-7.34	-1.55	0.03
298	SLU 64	10	5	7363	-6.9	-2.41	0.03
298	SLU 65	28	5	7180	-6.96	-1.68	0.02
298	SLU 66	5	5	7555	-7.12	-2.82	0.03
298	SLU 67	15	5	7446	-7.16	-2.39	0.03
298	SLU 68	24	5	7334	-7.13	-1.97	0.02
298	SLU 69	1	5	7708	-7.29	-3.11	0.03
298	SLU 70	11	5	7599	-7.33	-2.68	0.03
298	SLU 71	3	5	7669	-7.24	-2.98	0.03
298	SLU 72	13	5	7560	-7.27	-2.55	0.03
298	SLU 73	47	5	7818	-7.58	-0.98	0.03
298	SLU 74	24	5	8192	-7.75	-2.12	0.03
298	SLU 75	34	5	8083	-7.78	-1.69	0.03
298	SLU 76	44	5	7971	-7.75	-1.27	0.03
298	SLU 77	20	5	8346	-7.92	-2.41	0.03
298	SLU 78	31	6	8236	-7.95	-1.98	0.03
298	SLU 79	22	5	8307	-7.86	-2.28	0.03
298	SLU 80	33	5	8197	-7.9	-1.85	0.03
298	SLU 81	38	5	8273	-7.79	-1.4	0.03
298	SLU 82	48	5	8164	-7.82	-0.97	0.03
298	SLU 83	34	5	8427	-7.96	-1.69	0.03
298	SLU 84	45	6	8317	-7.99	-1.26	0.03
298	SLE RA 1	5	3	5522	-5.16	-1.91	0.02
298	SLE RA 2	17	4	5400	-5.2	-1.43	0.02
298	SLE RA 3	1	4	5650	-5.31	-2.19	0.02
298	SLE RA 4	9	4	5577	-5.34	-1.9	0.02
298	SLE RA 5	15	4	5502	-5.32	-1.62	0.02
298	SLE RA 6	-1	4	5752	-5.43	-2.39	0.02
298	SLE RA 7	6	4	5679	-5.45	-2.1	0.02
298	SLE RA 8	0	4	5726	-5.39	-2.3	0.02
298	SLE RA 9	7	4	5653	-5.41	-2.01	0.02
298	SLE RA 10	30	4	5825	-5.62	-0.96	0.02
298	SLE RA 11	14	4	6075	-5.73	-1.73	0.02
298	SLE RA 12	21	4	6002	-5.75	-1.44	0.02
298	SLE RA 13	27	4	5927	-5.73	-1.16	0.02
298	SLE RA 14	12	4	6177	-5.84	-1.92	0.02
298	SLE RA 15	19	4	6104	-5.86	-1.63	0.02
298	SLE RA 16	13	4	6151	-5.81	-1.83	0.02
298	SLE RA 17	20	4	6078	-5.83	-1.54	0.02
298	SLE RA 18	24	4	6129	-5.76	-1.25	0.02
298	SLE RA 19	31	4	6056	-5.78	-0.96	0.02
298	SLE RA 20	21	4	6231	-5.87	-1.44	0.02
298	SLE RA 21	28	4	6158	-5.89	-1.15	0.02
298	SLE FR 1	5	3	5522	-5.16	-1.91	0.02
298	SLE FR 2	8	3	5498	-5.17	-1.82	0.02
298	SLE FR 3	4	3	5563	-5.21	-1.99	0.02
298	SLE FR 4	13	4	5680	-5.35	-1.62	0.02
298	SLE FR 5	10	4	5745	-5.39	-1.79	0.02
298	SLE FR 6	14	4	5825	-5.46	-1.58	0.02
298	SLE QP 1	5	3	5522	-5.16	-1.91	0.02
298	SLE QP 2	11	4	5704	-5.34	-1.71	0.02
298	SLD 1	421	18	6892	-7.94	22.47	0.06
298	SLD 2	421	18	6892	-7.94	22.47	0.06
298	SLD 3	326	14	7759	-12.4	17.53	0.08

Nodo	Cont.	Reazione a traslazione			Reazione a rotazione		
Ind.	N.br.	x	y	z	x	y	z
298	SLD 4	326	14	7759	-12.4	17.53	0.08
298	SLD 5	277	13	4745	0.64	13.03	0
298	SLD 6	277	13	4745	0.64	13.03	0
298	SLD 7	-38	2	7636	-14.23	-3.44	0.07
298	SLD 8	-38	2	7636	-14.23	-3.44	0.07
298	SLD 9	60	5	3772	3.54	0.01	-0.03
298	SLD 10	60	5	3772	3.54	0.01	-0.03
298	SLD 11	-256	-6	6663	-11.33	-16.46	0.04
298	SLD 12	-256	-6	6663	-11.33	-16.46	0.04
298	SLD 13	-304	-7	3649	1.72	-20.95	-0.04
298	SLD 14	-304	-7	3649	1.72	-20.95	-0.04
298	SLD 15	-399	-10	4516	-2.74	-25.89	-0.02
298	SLD 16	-399	-10	4516	-2.74	-25.89	-0.02
298	SLV 1	970	36	8484	-11.15	54.93	0.11
298	SLV 2	970	36	8484	-11.15	54.93	0.11
298	SLV 3	743	29	10534	-22.27	42.99	0.15
298	SLV 4	743	29	10534	-22.27	42.99	0.15
298	SLV 5	643	25	3430	9.78	33.38	-0.02
298	SLV 6	643	25	3430	9.78	33.38	-0.02
298	SLV 7	-114	-1	10261	-27.28	-6.41	0.13
298	SLV 8	-114	-1	10261	-27.28	-6.41	0.13
298	SLV 9	136	8	1147	16.6	2.98	-0.09
298	SLV 10	136	8	1147	16.6	2.98	-0.09
298	SLV 11	-622	-18	7978	-20.46	-36.81	0.07
298	SLV 12	-622	-18	7978	-20.46	-36.81	0.07
298	SLV 13	-721	-21	874	11.59	-46.42	-0.11
298	SLV 14	-721	-21	874	11.59	-46.42	-0.11
298	SLV 15	-949	-29	2923	0.47	-58.36	-0.07
298	SLV 16	-949	-29	2923	0.47	-58.36	-0.07
299	SLU 1	-13	19	4554	-13.12	16.23	-0.13
299	SLU 2	2	19	4418	-13	16.47	-0.13
299	SLU 3	-18	20	4711	-13.69	16.72	-0.14
299	SLU 4	-9	20	4629	-13.62	16.87	-0.14
299	SLU 5	-1	20	4543	-13.43	16.9	-0.14
299	SLU 6	-21	21	4835	-14.13	17.14	-0.14
299	SLU 7	-12	21	4754	-14.05	17.29	-0.14
299	SLU 8	-19	21	4803	-13.99	17.08	-0.14
299	SLU 9	-10	21	4722	-13.92	17.22	-0.14
299	SLU 10	19	22	4966	-14.6	19.45	-0.15
299	SLU 11	0	23	5259	-15.29	19.7	-0.16
299	SLU 12	9	22	5177	-15.22	19.84	-0.16
299	SLU 13	16	22	5091	-15.03	19.88	-0.15
299	SLU 14	-4	23	5383	-15.73	20.12	-0.16
299	SLU 15	5	23	5302	-15.65	20.27	-0.16
299	SLU 16	-2	23	5351	-15.59	20.05	-0.16
299	SLU 17	7	23	5270	-15.52	20.2	-0.16
299	SLU 18	12	23	5337	-15.41	20.48	-0.16
299	SLU 19	21	23	5255	-15.33	20.63	-0.16
299	SLU 20	8	23	5462	-15.84	20.9	-0.16
299	SLU 21	18	23	5380	-15.77	21.05	-0.16
299	SLU 22	-2	22	5106	-14.8	18.93	-0.15
299	SLU 23	13	22	4970	-14.67	19.18	-0.15
299	SLU 24	-7	23	5262	-15.37	19.43	-0.16
299	SLU 25	2	23	5181	-15.29	19.58	-0.16
299	SLU 26	10	22	5094	-15.11	19.61	-0.15
299	SLU 27	-10	23	5387	-15.81	19.85	-0.16
299	SLU 28	-1	23	5306	-15.73	20	-0.16
299	SLU 29	-9	23	5355	-15.67	19.78	-0.16
299	SLU 30	0	23	5273	-15.59	19.93	-0.16
299	SLU 31	30	24	5518	-16.27	22.16	-0.17
299	SLU 32	10	25	5810	-16.97	22.4	-0.17
299	SLU 33	19	25	5729	-16.89	22.55	-0.17
299	SLU 34	27	25	5643	-16.71	22.58	-0.17
299	SLU 35	7	26	5935	-17.41	22.83	-0.18
299	SLU 36	16	26	5854	-17.33	22.98	-0.18
299	SLU 37	9	26	5903	-17.27	22.76	-0.18
299	SLU 38	18	25	5821	-17.19	22.91	-0.18
299	SLU 39	22	25	5889	-17.08	23.19	-0.18
299	SLU 40	31	25	5807	-17.01	23.34	-0.17
299	SLU 41	19	26	6013	-17.52	23.61	-0.18
299	SLU 42	28	26	5932	-17.44	23.76	-0.18
299	SLU 43	-20	24	5731	-16.48	20.17	-0.17
299	SLU 44	-5	24	5595	-16.36	20.41	-0.17
299	SLU 45	-25	25	5888	-17.06	20.66	-0.17
299	SLU 46	-16	25	5806	-16.98	20.81	-0.17
299	SLU 47	-9	25	5720	-16.79	20.84	-0.17
299	SLU 48	-28	26	6013	-17.49	21.08	-0.18
299	SLU 49	-19	26	5931	-17.42	21.23	-0.18
299	SLU 50	-27	26	5980	-17.36	21.01	-0.18
299	SLU 51	-18	26	5899	-17.28	21.16	-0.18
299	SLU 52	12	27	6143	-17.96	23.39	-0.18
299	SLU 53	-8	28	6436	-18.66	23.64	-0.19
299	SLU 54	1	27	6354	-18.58	23.78	-0.19
299	SLU 55	9	27	6268	-18.39	23.82	-0.19
299	SLU 56	-11	28	6561	-19.09	24.06	-0.2
299	SLU 57	-2	28	6479	-19.02	24.21	-0.19
299	SLU 58	-10	28	6529	-18.96	23.99	-0.19
299	SLU 59	-1	28	6447	-18.88	24.14	-0.19
299	SLU 60	4	28	6514	-18.77	24.42	-0.19
299	SLU 61	13	28	6433	-18.69	24.57	-0.19

Nodo	Cont.	Reazione a traslazione			Reazione a rotazione		
Ind.	N.br.	x	y	z	x	y	z
299	SLU 62	1	28	6639	-19.21	24.84	-0.2
299	SLU 63	10	28	6557	-19.13	24.99	-0.2
299	SLU 64	-10	27	6283	-18.16	22.87	-0.19
299	SLU 65	5	27	6147	-18.03	23.12	-0.18
299	SLU 66	-15	28	6440	-18.73	23.37	-0.19
299	SLU 67	-5	28	6358	-18.66	23.51	-0.19
299	SLU 68	2	27	6272	-18.47	23.55	-0.19
299	SLU 69	-18	28	6564	-19.17	23.79	-0.2
299	SLU 70	-9	28	6483	-19.09	23.94	-0.2
299	SLU 71	-16	28	6532	-19.03	23.72	-0.2
299	SLU 72	-7	28	6451	-18.96	23.87	-0.19
299	SLU 73	23	29	6695	-19.63	26.1	-0.2
299	SLU 74	3	30	6988	-20.33	26.34	-0.21
299	SLU 75	12	30	6906	-20.26	26.49	-0.21
299	SLU 76	19	30	6820	-20.07	26.52	-0.21
299	SLU 77	-1	31	7112	-20.77	26.77	-0.21
299	SLU 78	9	31	7031	-20.69	26.92	-0.21
299	SLU 79	1	31	7080	-20.63	26.7	-0.21
299	SLU 80	10	30	6999	-20.56	26.85	-0.21
299	SLU 81	15	30	7066	-20.45	27.13	-0.21
299	SLU 82	24	30	6984	-20.37	27.28	-0.21
299	SLU 83	12	31	7190	-20.88	27.55	-0.21
299	SLU 84	21	31	7109	-20.81	27.7	-0.21
299	SLE RA 1	-10	20	4712	-13.6	17	-0.14
299	SLE RA 2	0	20	4621	-13.52	17.16	-0.14
299	SLE RA 3	-13	21	4816	-13.98	17.33	-0.14
299	SLE RA 4	-7	21	4762	-13.93	17.43	-0.14
299	SLE RA 5	-2	20	4704	-13.81	17.45	-0.14
299	SLE RA 6	-15	21	4899	-14.27	17.61	-0.15
299	SLE RA 7	-9	21	4845	-14.22	17.71	-0.15
299	SLE RA 8	-14	21	4878	-14.18	17.57	-0.15
299	SLE RA 9	-8	21	4824	-14.13	17.67	-0.14
299	SLE RA 10	12	22	4986	-14.58	19.15	-0.15
299	SLE RA 11	-2	22	5182	-15.05	19.31	-0.15
299	SLE RA 12	4	22	5127	-15	19.41	-0.15
299	SLE RA 13	10	22	5070	-14.87	19.43	-0.15
299	SLE RA 14	-4	23	5265	-15.34	19.6	-0.16
299	SLE RA 15	2	23	5210	-15.29	19.7	-0.16
299	SLE RA 16	-3	23	5243	-15.25	19.55	-0.16
299	SLE RA 17	3	22	5189	-15.2	19.65	-0.16
299	SLE RA 18	6	22	5234	-15.12	19.84	-0.16
299	SLE RA 19	13	22	5179	-15.07	19.93	-0.15
299	SLE RA 20	4	23	5317	-15.42	20.12	-0.16
299	SLE RA 21	10	23	5262	-15.36	20.22	-0.16
299	SLE FR 1	-10	20	4712	-13.6	17	-0.14
299	SLE FR 2	-8	20	4694	-13.58	17.03	-0.14
299	SLE FR 3	-11	20	4745	-13.72	17.11	-0.14
299	SLE FR 4	-3	21	4850	-14.04	17.88	-0.14
299	SLE FR 5	-6	21	4902	-14.17	17.96	-0.15
299	SLE FR 6	-2	21	4973	-14.36	18.42	-0.15
299	SLE QP 1	-10	20	4712	-13.6	17	-0.14
299	SLE QP 2	-5	21	4868	-14.06	17.85	-0.14
299	SLD 1	325	32	5730	-17.32	39.72	-0.22
299	SLD 2	325	32	5730	-17.32	39.72	-0.22
299	SLD 3	439	39	6385	-26.27	47.34	-0.26
299	SLD 4	439	39	6385	-26.27	47.34	-0.26
299	SLD 5	-79	14	4133	-1.46	12.87	-0.1
299	SLD 6	-79	14	4133	-1.46	12.87	-0.1
299	SLD 7	302	37	6317	-31.3	38.24	-0.24
299	SLD 8	302	37	6317	-31.3	38.24	-0.24
299	SLD 9	-311	5	3419	3.18	-2.54	-0.05
299	SLD 10	-311	5	3419	3.18	-2.54	-0.05
299	SLD 11	69	28	5604	-26.66	22.83	-0.18
299	SLD 12	69	28	5604	-26.66	22.83	-0.18
299	SLD 13	-449	2	3351	-1.84	-11.63	-0.03
299	SLD 14	-449	2	3351	-1.84	-11.63	-0.03
299	SLD 15	-335	9	4006	-10.8	-4.02	-0.07
299	SLD 16	-335	9	4006	-10.8	-4.02	-0.07
299	SLV 1	759	48	6884	-21.13	68.52	-0.31
299	SLV 2	759	48	6884	-21.13	68.52	-0.31
299	SLV 3	1037	65	8432	-43.47	87.14	-0.41
299	SLV 4	1037	65	8432	-43.47	87.14	-0.41
299	SLV 5	-198	4	3124	17.71	4.8	-0.04
299	SLV 6	-198	4	3124	17.71	4.8	-0.04
299	SLV 7	730	59	8286	-56.77	66.89	-0.37
299	SLV 8	730	59	8286	-56.77	66.89	-0.37
299	SLV 9	-740	-18	1451	28.65	-31.19	0.09
299	SLV 10	-740	-18	1451	28.65	-31.19	0.09
299	SLV 11	188	38	6612	-45.83	30.9	-0.24
299	SLV 12	188	38	6612	-45.83	30.9	-0.24
299	SLV 13	-1047	-23	1305	15.35	-51.44	0.12
299	SLV 14	-1047	-23	1305	15.35	-51.44	0.12
299	SLV 15	-769	-6	2853	-6.99	-32.81	0.02
299	SLV 16	-769	-6	2853	-6.99	-32.81	0.02
300	SLU 1	-291	27	4002	-18.88	-26.32	-0.25
300	SLU 2	-271	26	3897	-18.63	-24.96	-0.25
300	SLU 3	-306	28	4133	-19.7	-27.58	-0.26
300	SLU 4	-294	27	4069	-19.55	-26.76	-0.26
300	SLU 5	-282	27	4000	-19.26	-25.92	-0.26
300	SLU 6	-317	29	4236	-20.33	-28.55	-0.27

Nodo	Cont.	Reazione a traslazione			Reazione a rotazione		
Ind.	N.br.	x	y	z	x	y	z
300	SLU 7	-305	28	4173	-20.18	-27.73	-0.27
300	SLU 8	-314	28	4209	-20.13	-28.25	-0.27
300	SLU 9	-301	28	4145	-19.98	-27.43	-0.27
300	SLU 10	-291	29	4384	-20.92	-27.29	-0.28
300	SLU 11	-326	31	4620	-21.99	-29.92	-0.29
300	SLU 12	-314	31	4556	-21.84	-29.1	-0.29
300	SLU 13	-302	30	4487	-21.55	-28.26	-0.29
300	SLU 14	-337	32	4723	-22.62	-30.88	-0.3
300	SLU 15	-325	32	4659	-22.47	-30.07	-0.3
300	SLU 16	-333	32	4696	-22.42	-30.58	-0.3
300	SLU 17	-321	31	4632	-22.27	-29.77	-0.3
300	SLU 18	-320	31	4698	-22.15	-29.66	-0.3
300	SLU 19	-308	31	4635	-22	-28.84	-0.29
300	SLU 20	-331	32	4801	-22.77	-30.62	-0.31
300	SLU 21	-319	32	4738	-22.63	-29.8	-0.3
300	SLU 22	-317	30	4489	-21.28	-29.05	-0.29
300	SLU 23	-297	29	4383	-21.04	-27.69	-0.28
300	SLU 24	-332	31	4619	-22.11	-30.32	-0.3
300	SLU 25	-320	31	4556	-21.96	-29.5	-0.29
300	SLU 26	-308	30	4486	-21.66	-28.65	-0.29
300	SLU 27	-343	32	4722	-22.73	-31.28	-0.3
300	SLU 28	-331	32	4659	-22.59	-30.46	-0.3
300	SLU 29	-339	32	4695	-22.54	-30.98	-0.3
300	SLU 30	-327	31	4632	-22.39	-30.16	-0.3
300	SLU 31	-317	33	4870	-23.33	-30.03	-0.31
300	SLU 32	-352	34	5106	-24.4	-32.65	-0.33
300	SLU 33	-340	34	5043	-24.25	-31.83	-0.32
300	SLU 34	-328	34	4973	-23.96	-30.99	-0.32
300	SLU 35	-363	35	5209	-25.02	-33.62	-0.34
300	SLU 36	-351	35	5146	-24.88	-32.8	-0.33
300	SLU 37	-359	35	5182	-24.83	-33.32	-0.33
300	SLU 38	-347	35	5118	-24.68	-32.5	-0.33
300	SLU 39	-346	34	5184	-24.55	-32.39	-0.33
300	SLU 40	-333	34	5121	-24.41	-31.57	-0.33
300	SLU 41	-357	35	5287	-25.18	-33.35	-0.34
300	SLU 42	-345	35	5224	-25.03	-32.54	-0.34
300	SLU 43	-370	33	5036	-23.71	-33.28	-0.32
300	SLU 44	-350	33	4931	-23.47	-31.91	-0.31
300	SLU 45	-384	35	5167	-24.54	-34.54	-0.33
300	SLU 46	-372	34	5103	-24.39	-33.72	-0.33
300	SLU 47	-361	34	5034	-24.1	-32.88	-0.32
300	SLU 48	-396	35	5270	-25.16	-35.5	-0.34
300	SLU 49	-383	35	5207	-25.02	-34.69	-0.33
300	SLU 50	-392	35	5243	-24.97	-35.2	-0.33
300	SLU 51	-380	35	5179	-24.82	-34.39	-0.33
300	SLU 52	-369	36	5418	-25.76	-34.25	-0.34
300	SLU 53	-404	38	5654	-26.83	-36.88	-0.36
300	SLU 54	-392	37	5590	-26.68	-36.06	-0.36
300	SLU 55	-381	37	5521	-26.39	-35.22	-0.35
300	SLU 56	-415	39	5757	-27.45	-37.84	-0.37
300	SLU 57	-403	38	5693	-27.31	-37.02	-0.37
300	SLU 58	-412	38	5730	-27.26	-37.54	-0.37
300	SLU 59	-400	38	5666	-27.11	-36.72	-0.36
300	SLU 60	-398	38	5732	-26.99	-36.62	-0.36
300	SLU 61	-386	38	5669	-26.84	-35.8	-0.36
300	SLU 62	-409	39	5835	-27.61	-37.58	-0.37
300	SLU 63	-397	39	5772	-27.47	-36.76	-0.37
300	SLU 64	-396	37	5523	-26.12	-36.01	-0.35
300	SLU 65	-375	36	5417	-25.88	-34.65	-0.35
300	SLU 66	-410	38	5653	-26.94	-37.27	-0.36
300	SLU 67	-398	38	5590	-26.8	-36.46	-0.36
300	SLU 68	-387	37	5520	-26.5	-35.61	-0.35
300	SLU 69	-421	39	5756	-27.57	-38.24	-0.37
300	SLU 70	-409	38	5693	-27.42	-37.42	-0.37
300	SLU 71	-418	38	5729	-27.37	-37.94	-0.37
300	SLU 72	-406	38	5666	-27.23	-37.12	-0.36
300	SLU 73	-395	40	5904	-28.17	-36.98	-0.38
300	SLU 74	-430	41	6140	-29.23	-39.61	-0.39
300	SLU 75	-418	41	6077	-29.09	-38.79	-0.39
300	SLU 76	-406	40	6007	-28.79	-37.95	-0.39
300	SLU 77	-441	42	6243	-29.86	-40.58	-0.4
300	SLU 78	-429	42	6180	-29.71	-39.76	-0.4
300	SLU 79	-438	42	6216	-29.66	-40.28	-0.4
300	SLU 80	-426	41	6152	-29.52	-39.46	-0.4
300	SLU 81	-424	41	6218	-29.39	-39.35	-0.39
300	SLU 82	-412	41	6155	-29.25	-38.53	-0.39
300	SLU 83	-435	42	6321	-30.02	-40.31	-0.4
300	SLU 84	-423	42	6258	-29.87	-39.5	-0.4
300	SLE RA 1	-299	28	4141	-19.56	-27.1	-0.26
300	SLE RA 2	-285	27	4071	-19.4	-26.19	-0.26
300	SLE RA 3	-308	28	4228	-20.11	-27.94	-0.27
300	SLE RA 4	-300	28	4186	-20.01	-27.4	-0.27
300	SLE RA 5	-293	28	4140	-19.82	-26.83	-0.27
300	SLE RA 6	-316	29	4297	-20.53	-28.58	-0.27
300	SLE RA 7	-308	29	4255	-20.43	-28.04	-0.27
300	SLE RA 8	-313	29	4279	-20.4	-28.38	-0.27
300	SLE RA 9	-305	29	4237	-20.3	-27.84	-0.27
300	SLE RA 10	-298	29	4396	-20.93	-27.75	-0.28
300	SLE RA 11	-322	30	4553	-21.64	-29.5	-0.29
300	SLE RA 12	-314	30	4511	-21.54	-28.96	-0.29

Nodo	Cont.	Reazione a traslazione			Reazione a rotazione		
Ind.	N.br.	x	y	z	x	y	z
300	SLE RA 13	-306	30	4464	-21.35	-28.39	-0.29
300	SLE RA 14	-329	31	4622	-22.06	-30.14	-0.3
300	SLE RA 15	-321	31	4579	-21.96	-29.6	-0.29
300	SLE RA 16	-327	31	4603	-21.93	-29.94	-0.29
300	SLE RA 17	-319	31	4561	-21.83	-29.4	-0.29
300	SLE RA 18	-318	31	4605	-21.74	-29.33	-0.29
300	SLE RA 19	-309	30	4563	-21.65	-28.78	-0.29
300	SLE RA 20	-325	31	4674	-22.16	-29.97	-0.3
300	SLE RA 21	-317	31	4632	-22.06	-29.42	-0.3
300	SLE FR 1	-299	28	4141	-19.56	-27.1	-0.26
300	SLE FR 2	-296	27	4127	-19.53	-26.92	-0.26
300	SLE FR 3	-302	28	4169	-19.73	-27.36	-0.26
300	SLE FR 4	-302	28	4266	-20.18	-27.59	-0.27
300	SLE FR 5	-307	29	4308	-20.38	-28.02	-0.27
300	SLE FR 6	-308	29	4373	-20.65	-28.21	-0.28
300	SLE QP 1	-299	28	4141	-19.56	-27.1	-0.26
300	SLE QP 2	-304	28	4280	-20.22	-27.77	-0.27
300	SLD 1	156	37	4922	-22.51	0.92	-0.35
300	SLD 2	156	37	4922	-22.51	0.92	-0.35
300	SLD 3	28	49	5448	-36.06	-6.69	-0.46
300	SLD 4	28	49	5448	-36.06	-6.69	-0.46
300	SLD 5	26	13	3674	-0.37	-7.63	-0.13
300	SLD 6	26	13	3674	-0.37	-7.63	-0.13
300	SLD 7	-397	53	5430	-45.51	-32.98	-0.49
300	SLD 8	-397	53	5430	-45.51	-32.98	-0.49
300	SLD 9	-211	4	3131	5.07	-22.56	-0.05
300	SLD 10	-211	4	3131	5.07	-22.56	-0.05
300	SLD 11	-635	44	4887	-40.07	-47.91	-0.41
300	SLD 12	-635	44	4887	-40.07	-47.91	-0.41
300	SLD 13	-637	8	3113	-4.38	-48.85	-0.09
300	SLD 14	-637	8	3113	-4.38	-48.85	-0.09
300	SLD 15	-764	20	3639	-17.92	-56.45	-0.19
300	SLD 16	-764	20	3639	-17.92	-56.45	-0.19
300	SLV 1	774	48	5776	-24.7	39.39	-0.45
300	SLV 2	774	48	5776	-24.7	39.39	-0.45
300	SLV 3	466	78	7025	-58.55	21.15	-0.71
300	SLV 4	466	78	7025	-58.55	21.15	-0.71
300	SLV 5	486	-11	2836	29.77	20.04	0.07
300	SLV 6	486	-11	2836	29.77	20.04	0.07
300	SLV 7	-540	88	6997	-83.04	-40.76	-0.8
300	SLV 8	-540	88	6997	-83.04	-40.76	-0.8
300	SLV 9	-69	-32	1564	42.61	-14.78	0.26
300	SLV 10	-69	-32	1564	42.61	-14.78	0.26
300	SLV 11	-1094	68	5725	-70.2	-75.58	-0.62
300	SLV 12	-1094	68	5725	-70.2	-75.58	-0.62
300	SLV 13	-1075	-21	1536	18.11	-76.68	0.17
300	SLV 14	-1075	-21	1536	18.11	-76.68	0.17
300	SLV 15	-1382	9	2785	-15.73	-94.92	-0.09
300	SLV 16	-1382	9	2785	-15.73	-94.92	-0.09
301	SLU 1	-196	29	3594	-22.42	4.51	-0.41
301	SLU 2	-180	28	3512	-22.11	5.01	-0.41
301	SLU 3	-205	30	3705	-23.4	4.69	-0.43
301	SLU 4	-195	30	3655	-23.21	4.99	-0.43
301	SLU 5	-186	29	3599	-22.85	5.19	-0.42
301	SLU 6	-212	31	3792	-24.14	4.87	-0.44
301	SLU 7	-202	31	3742	-23.95	5.17	-0.44
301	SLU 8	-209	31	3768	-23.9	4.87	-0.44
301	SLU 9	-200	30	3718	-23.72	5.17	-0.44
301	SLU 10	-189	32	3955	-24.83	6.44	-0.46
301	SLU 11	-214	33	4148	-26.12	6.12	-0.48
301	SLU 12	-205	33	4099	-25.93	6.42	-0.48
301	SLU 13	-196	33	4042	-25.57	6.62	-0.47
301	SLU 14	-221	34	4235	-26.86	6.3	-0.49
301	SLU 15	-211	34	4186	-26.68	6.6	-0.49
301	SLU 16	-219	34	4211	-26.62	6.3	-0.49
301	SLU 17	-209	34	4162	-26.44	6.6	-0.49
301	SLU 18	-209	34	4228	-26.3	6.55	-0.48
301	SLU 19	-200	33	4178	-26.12	6.85	-0.48
301	SLU 20	-216	35	4315	-27.05	6.73	-0.5
301	SLU 21	-206	34	4265	-26.86	7.03	-0.49
301	SLU 22	-210	32	4034	-25.28	5.75	-0.46
301	SLU 23	-194	32	3951	-24.97	6.25	-0.46
301	SLU 24	-219	34	4144	-26.26	5.93	-0.48
301	SLU 25	-209	33	4095	-26.08	6.23	-0.48
301	SLU 26	-200	33	4038	-25.72	6.43	-0.47
301	SLU 27	-226	35	4231	-27.01	6.11	-0.5
301	SLU 28	-216	34	4182	-26.82	6.41	-0.49
301	SLU 29	-223	34	4207	-26.77	6.11	-0.49
301	SLU 30	-214	34	4158	-26.58	6.41	-0.49
301	SLU 31	-203	35	4394	-27.69	7.68	-0.51
301	SLU 32	-228	37	4588	-28.98	7.36	-0.53
301	SLU 33	-218	37	4538	-28.8	7.66	-0.53
301	SLU 34	-210	36	4481	-28.44	7.86	-0.52
301	SLU 35	-235	38	4675	-29.73	7.54	-0.55
301	SLU 36	-225	38	4625	-29.54	7.84	-0.54
301	SLU 37	-233	38	4651	-29.49	7.54	-0.54
301	SLU 38	-223	37	4601	-29.3	7.84	-0.54
301	SLU 39	-223	37	4667	-29.17	7.79	-0.54
301	SLU 40	-213	37	4618	-28.98	8.09	-0.53
301	SLU 41	-230	38	4754	-29.91	7.97	-0.55

Nodo	Cont.	Reazione a traslazione			Reazione a rotazione		
Ind.	N.br.	x	y	z	x	y	z
301	SLU 42	-220	38	4704	-29.73	8.27	-0.55
301	SLU 43	-250	36	4522	-28.16	5.43	-0.52
301	SLU 44	-234	36	4439	-27.85	5.94	-0.51
301	SLU 45	-259	37	4633	-29.14	5.62	-0.54
301	SLU 46	-249	37	4583	-28.95	5.92	-0.53
301	SLU 47	-240	37	4526	-28.59	6.12	-0.52
301	SLU 48	-266	38	4719	-29.88	5.8	-0.55
301	SLU 49	-256	38	4670	-29.7	6.1	-0.55
301	SLU 50	-263	38	4696	-29.64	5.79	-0.55
301	SLU 51	-254	38	4646	-29.46	6.09	-0.54
301	SLU 52	-243	39	4883	-30.57	7.37	-0.56
301	SLU 53	-268	41	5076	-31.86	7.05	-0.59
301	SLU 54	-259	41	5027	-31.68	7.35	-0.58
301	SLU 55	-250	40	4970	-31.31	7.55	-0.57
301	SLU 56	-275	42	5163	-32.6	7.23	-0.6
301	SLU 57	-265	42	5113	-32.42	7.53	-0.6
301	SLU 58	-273	42	5139	-32.37	7.22	-0.6
301	SLU 59	-263	41	5090	-32.18	7.53	-0.59
301	SLU 60	-263	41	5155	-32.05	7.48	-0.59
301	SLU 61	-254	41	5106	-31.86	7.78	-0.59
301	SLU 62	-270	42	5242	-32.79	7.66	-0.6
301	SLU 63	-260	42	5193	-32.6	7.96	-0.6
301	SLU 64	-264	40	4961	-31.02	6.67	-0.57
301	SLU 65	-248	39	4879	-30.71	7.18	-0.56
301	SLU 66	-273	41	5072	-32	6.86	-0.59
301	SLU 67	-263	41	5022	-31.82	7.16	-0.58
301	SLU 68	-254	40	4966	-31.46	7.36	-0.58
301	SLU 69	-280	42	5159	-32.75	7.04	-0.6
301	SLU 70	-270	42	5109	-32.56	7.34	-0.6
301	SLU 71	-277	42	5135	-32.51	7.03	-0.6
301	SLU 72	-268	41	5085	-32.32	7.34	-0.59
301	SLU 73	-257	43	5322	-33.44	8.61	-0.61
301	SLU 74	-282	44	5515	-34.73	8.29	-0.64
301	SLU 75	-272	44	5466	-34.54	8.59	-0.63
301	SLU 76	-264	44	5409	-34.18	8.79	-0.63
301	SLU 77	-289	45	5602	-35.47	8.47	-0.65
301	SLU 78	-279	45	5553	-35.28	8.77	-0.65
301	SLU 79	-287	45	5578	-35.23	8.46	-0.65
301	SLU 80	-277	45	5529	-35.05	8.77	-0.64
301	SLU 81	-277	45	5595	-34.91	8.72	-0.64
301	SLU 82	-267	44	5545	-34.73	9.02	-0.64
301	SLU 83	-284	46	5681	-35.66	8.9	-0.66
301	SLU 84	-274	45	5632	-35.47	9.2	-0.65
301	SLE RA 1	-200	30	3720	-23.23	4.86	-0.43
301	SLE RA 2	-189	29	3665	-23.03	5.2	-0.42
301	SLE RA 3	-206	31	3794	-23.89	4.98	-0.44
301	SLE RA 4	-199	30	3761	-23.76	5.19	-0.44
301	SLE RA 5	-194	30	3723	-23.52	5.32	-0.43
301	SLE RA 6	-210	31	3851	-24.38	5.1	-0.45
301	SLE RA 7	-204	31	3818	-24.26	5.31	-0.45
301	SLE RA 8	-209	31	3836	-24.23	5.1	-0.45
301	SLE RA 9	-202	31	3803	-24.1	5.3	-0.44
301	SLE RA 10	-195	32	3960	-24.84	6.15	-0.46
301	SLE RA 11	-212	33	4089	-25.7	5.94	-0.47
301	SLE RA 12	-206	33	4056	-25.58	6.14	-0.47
301	SLE RA 13	-200	32	4018	-25.34	6.27	-0.47
301	SLE RA 14	-217	34	4147	-26.2	6.06	-0.48
301	SLE RA 15	-210	33	4114	-26.07	6.26	-0.48
301	SLE RA 16	-215	33	4131	-26.04	6.05	-0.48
301	SLE RA 17	-209	33	4098	-25.92	6.26	-0.48
301	SLE RA 18	-209	33	4142	-25.83	6.22	-0.47
301	SLE RA 19	-202	33	4109	-25.7	6.42	-0.47
301	SLE RA 20	-213	34	4200	-26.32	6.34	-0.48
301	SLE RA 21	-207	34	4167	-26.2	6.54	-0.48
301	SLE FR 1	-200	30	3720	-23.23	4.86	-0.43
301	SLE FR 2	-198	30	3709	-23.19	4.93	-0.43
301	SLE FR 3	-202	30	3743	-23.43	4.91	-0.43
301	SLE FR 4	-200	31	3835	-23.97	5.34	-0.44
301	SLE FR 5	-204	31	3870	-24.21	5.32	-0.45
301	SLE FR 6	-204	31	3931	-24.53	5.54	-0.45
301	SLE QP 1	-200	30	3720	-23.23	4.86	-0.43
301	SLE QP 2	-203	31	3846	-24.01	5.27	-0.44
301	SLD 1	180	35	4329	-24.64	34.29	-0.5
301	SLD 2	180	35	4329	-24.64	34.29	-0.5
301	SLD 3	323	52	4783	-42.15	44.84	-0.7
301	SLD 4	323	52	4783	-42.15	44.84	-0.7
301	SLD 5	-305	7	3302	2.35	-2.02	-0.16
301	SLD 6	-305	7	3302	2.35	-2.02	-0.16
301	SLD 7	172	62	4816	-56	33.14	-0.82
301	SLD 8	172	62	4816	-56	33.14	-0.82
301	SLD 9	-577	0	2876	7.98	-22.6	-0.06
301	SLD 10	-577	0	2876	7.98	-22.6	-0.06
301	SLD 11	-100	54	4391	-50.37	12.56	-0.72
301	SLD 12	-100	54	4391	-50.37	12.56	-0.72
301	SLD 13	-728	10	2910	-5.88	-34.3	-0.18
301	SLD 14	-728	10	2910	-5.88	-34.3	-0.18
301	SLD 15	-585	26	3364	-23.38	-23.75	-0.38
301	SLD 16	-585	26	3364	-23.38	-23.75	-0.38
301	SLV 1	683	41	4966	-24.3	72.54	-0.57
301	SLV 2	683	41	4966	-24.3	72.54	-0.57

Nodo	Cont.	Reazione a traslazione			Reazione a rotazione		
Ind.	N.br.	x	y	z	x	y	z
301	SLV 3	1030	81	6052	-68.09	98.27	-1.07
301	SLV 4	1030	81	6052	-68.09	98.27	-1.07
301	SLV 5	-464	-28	2535	42.31	-13.57	0.27
301	SLV 6	-464	-28	2535	42.31	-13.57	0.27
301	SLV 7	694	108	6155	-103.65	72.19	-1.38
301	SLV 8	694	108	6155	-103.65	72.19	-1.38
301	SLV 9	-1099	-46	1538	55.62	-61.65	0.5
301	SLV 10	-1099	-46	1538	55.62	-61.65	0.5
301	SLV 11	59	90	5158	-90.34	24.11	-1.15
301	SLV 12	59	90	5158	-90.34	24.11	-1.15
301	SLV 13	-1435	-20	1641	20.06	-87.73	0.19
301	SLV 14	-1435	-20	1641	20.06	-87.73	0.19
301	SLV 15	-1088	21	2727	-23.72	-62	-0.31
301	SLV 16	-1088	21	2727	-23.72	-62	-0.31
302	SLU 1	-223	30	3233	-24.42	-29.95	-0.52
302	SLU 2	-207	30	3171	-24.09	-28.51	-0.51
302	SLU 3	-232	32	3326	-25.49	-31.19	-0.54
302	SLU 4	-222	32	3289	-25.29	-30.33	-0.54
302	SLU 5	-214	31	3243	-24.89	-29.46	-0.53
302	SLU 6	-239	33	3399	-26.3	-32.14	-0.56
302	SLU 7	-229	33	3361	-26.1	-31.27	-0.56
302	SLU 8	-236	33	3378	-26.03	-31.85	-0.56
302	SLU 9	-227	32	3340	-25.83	-30.98	-0.55
302	SLU 10	-222	34	3576	-27.07	-31.36	-0.57
302	SLU 11	-246	35	3732	-28.47	-34.04	-0.6
302	SLU 12	-237	35	3695	-28.27	-33.17	-0.6
302	SLU 13	-228	35	3649	-27.87	-32.31	-0.59
302	SLU 14	-253	37	3805	-29.28	-34.98	-0.62
302	SLU 15	-244	36	3767	-29.08	-34.12	-0.62
302	SLU 16	-251	36	3784	-29.01	-34.69	-0.62
302	SLU 17	-242	36	3746	-28.81	-33.83	-0.61
302	SLU 18	-244	36	3812	-28.68	-34.02	-0.61
302	SLU 19	-234	35	3775	-28.48	-33.16	-0.6
302	SLU 20	-251	37	3885	-29.49	-34.97	-0.63
302	SLU 21	-241	36	3848	-29.29	-34.1	-0.62
302	SLU 22	-241	34	3631	-27.56	-33.1	-0.59
302	SLU 23	-225	34	3569	-27.23	-31.66	-0.58
302	SLU 24	-250	36	3725	-28.63	-34.34	-0.61
302	SLU 25	-240	35	3687	-28.43	-33.47	-0.6
302	SLU 26	-232	35	3642	-28.03	-32.61	-0.59
302	SLU 27	-257	37	3797	-29.43	-35.28	-0.63
302	SLU 28	-247	36	3760	-29.23	-34.42	-0.62
302	SLU 29	-255	36	3776	-29.17	-34.99	-0.62
302	SLU 30	-245	36	3739	-28.97	-34.13	-0.62
302	SLU 31	-240	38	3975	-30.21	-34.51	-0.64
302	SLU 32	-265	39	4131	-31.61	-37.18	-0.67
302	SLU 33	-255	39	4093	-31.41	-36.32	-0.66
302	SLU 34	-246	39	4047	-31.01	-35.45	-0.66
302	SLU 35	-271	40	4203	-32.42	-38.13	-0.69
302	SLU 36	-262	40	4166	-32.22	-37.26	-0.68
302	SLU 37	-269	40	4182	-32.15	-37.84	-0.68
302	SLU 38	-260	40	4145	-31.95	-36.97	-0.68
302	SLU 39	-262	40	4211	-31.82	-37.17	-0.67
302	SLU 40	-252	39	4174	-31.62	-36.3	-0.67
302	SLU 41	-269	41	4283	-32.62	-38.11	-0.69
302	SLU 42	-259	40	4246	-32.42	-37.25	-0.69
302	SLU 43	-284	38	4066	-30.67	-37.86	-0.65
302	SLU 44	-267	38	4004	-30.34	-36.42	-0.64
302	SLU 45	-292	40	4160	-31.74	-39.1	-0.68
302	SLU 46	-283	39	4122	-31.54	-38.24	-0.67
302	SLU 47	-274	39	4076	-31.14	-37.37	-0.66
302	SLU 48	-299	41	4232	-32.55	-40.04	-0.69
302	SLU 49	-290	40	4195	-32.35	-39.18	-0.69
302	SLU 50	-297	40	4211	-32.28	-39.75	-0.69
302	SLU 51	-287	40	4174	-32.08	-38.89	-0.68
302	SLU 52	-282	41	4410	-33.32	-39.27	-0.71
302	SLU 53	-307	43	4565	-34.72	-41.95	-0.74
302	SLU 54	-297	43	4528	-34.52	-41.08	-0.73
302	SLU 55	-289	42	4482	-34.12	-40.22	-0.72
302	SLU 56	-314	44	4638	-35.53	-42.89	-0.76
302	SLU 57	-304	44	4601	-35.33	-42.03	-0.75
302	SLU 58	-312	44	4617	-35.26	-42.6	-0.75
302	SLU 59	-302	44	4579	-35.06	-41.74	-0.75
302	SLU 60	-305	44	4646	-34.93	-41.93	-0.74
302	SLU 61	-295	43	4608	-34.73	-41.07	-0.74
302	SLU 62	-311	45	4718	-35.74	-42.87	-0.76
302	SLU 63	-302	44	4681	-35.54	-42.01	-0.75
302	SLU 64	-302	42	4464	-33.81	-41.01	-0.72
302	SLU 65	-286	42	4402	-33.48	-39.57	-0.71
302	SLU 66	-311	44	4558	-34.88	-42.24	-0.74
302	SLU 67	-301	43	4521	-34.68	-41.38	-0.74
302	SLU 68	-292	43	4475	-34.28	-40.51	-0.73
302	SLU 69	-317	45	4630	-35.68	-43.19	-0.76
302	SLU 70	-308	44	4593	-35.48	-42.33	-0.75
302	SLU 71	-315	44	4609	-35.42	-42.9	-0.75
302	SLU 72	-306	44	4572	-35.22	-42.03	-0.75
302	SLU 73	-300	45	4808	-36.46	-42.41	-0.77
302	SLU 74	-325	47	4964	-37.86	-45.09	-0.8
302	SLU 75	-316	47	4926	-37.66	-44.23	-0.8
302	SLU 76	-307	46	4881	-37.26	-43.36	-0.79

Nodo	Cont.	Reazione a traslazione			Reazione a rotazione		
Ind.	N.br.	x	y	z	x	y	z
302	SLU 77	-332	48	5036	-38.67	-46.04	-0.82
302	SLU 78	-322	48	4999	-38.47	-45.17	-0.82
302	SLU 79	-330	48	5015	-38.4	-45.74	-0.82
302	SLU 80	-320	48	4978	-38.2	-44.88	-0.81
302	SLU 81	-323	47	5044	-38.07	-45.07	-0.81
302	SLU 82	-313	47	5007	-37.87	-44.21	-0.8
302	SLU 83	-329	48	5117	-38.87	-46.02	-0.82
302	SLU 84	-320	48	5079	-38.67	-45.16	-0.82
302	SLE RA 1	-228	32	3347	-25.32	-30.85	-0.54
302	SLE RA 2	-217	31	3305	-25.09	-29.89	-0.53
302	SLE RA 3	-234	32	3409	-26.03	-31.68	-0.55
302	SLE RA 4	-228	32	3384	-25.9	-31.1	-0.55
302	SLE RA 5	-222	32	3353	-25.63	-30.52	-0.54
302	SLE RA 6	-239	33	3457	-26.57	-32.31	-0.57
302	SLE RA 7	-232	33	3432	-26.43	-31.73	-0.56
302	SLE RA 8	-237	33	3443	-26.39	-32.11	-0.56
302	SLE RA 9	-231	33	3418	-26.26	-31.54	-0.56
302	SLE RA 10	-227	34	3576	-27.08	-31.79	-0.57
302	SLE RA 11	-244	35	3679	-28.02	-33.58	-0.6
302	SLE RA 12	-237	35	3655	-27.88	-33	-0.59
302	SLE RA 13	-232	34	3624	-27.62	-32.42	-0.59
302	SLE RA 14	-248	36	3728	-28.55	-34.21	-0.61
302	SLE RA 15	-242	35	3703	-28.42	-33.63	-0.6
302	SLE RA 16	-247	35	3714	-28.38	-34.01	-0.6
302	SLE RA 17	-240	35	3689	-28.25	-33.44	-0.6
302	SLE RA 18	-242	35	3733	-28.16	-33.56	-0.6
302	SLE RA 19	-236	35	3708	-28.02	-32.99	-0.59
302	SLE RA 20	-247	36	3781	-28.69	-34.19	-0.61
302	SLE RA 21	-240	36	3757	-28.56	-33.62	-0.61
302	SLE FR 1	-228	32	3347	-25.32	-30.85	-0.54
302	SLE FR 2	-226	32	3338	-25.27	-30.66	-0.54
302	SLE FR 3	-230	32	3366	-25.53	-31.1	-0.54
302	SLE FR 4	-230	33	3454	-26.12	-31.47	-0.56
302	SLE FR 5	-234	33	3482	-26.38	-31.92	-0.56
302	SLE FR 6	-235	33	3540	-26.74	-32.21	-0.57
302	SLE QP 1	-228	32	3347	-25.32	-30.85	-0.54
302	SLE QP 2	-232	33	3463	-26.17	-31.67	-0.56
302	SLD 1	193	34	3842	-25.21	12.2	-0.55
302	SLD 2	193	34	3842	-25.21	12.2	-0.55
302	SLD 3	344	54	4252	-45.57	1.03	-0.88
302	SLD 4	344	54	4252	-45.57	1.03	-0.88
302	SLD 5	-335	3	2955	5.01	-1.57	-0.05
302	SLD 6	-335	3	2955	5.01	-1.57	-0.05
302	SLD 7	170	69	4321	-62.88	-38.8	-1.15
302	SLD 8	170	69	4321	-62.88	-38.8	-1.15
302	SLD 9	-635	-4	2604	10.54	-24.54	0.04
302	SLD 10	-635	-4	2604	10.54	-24.54	0.04
302	SLD 11	-130	63	3970	-57.34	-61.77	-1.06
302	SLD 12	-130	63	3970	-57.34	-61.77	-1.06
302	SLD 13	-809	11	2673	-6.77	-64.36	-0.23
302	SLD 14	-809	11	2673	-6.77	-64.36	-0.23
302	SLD 15	-657	31	3083	-27.13	-75.53	-0.56
302	SLD 16	-657	31	3083	-27.13	-75.53	-0.56
302	SLV 1	754	35	4335	-22.5	71.18	-0.52
302	SLV 2	754	35	4335	-22.5	71.18	-0.52
302	SLV 3	1120	85	5326	-73.47	44.38	-1.35
302	SLV 4	1120	85	5326	-73.47	44.38	-1.35
302	SLV 5	-492	-43	2222	52.24	39.82	0.71
302	SLV 6	-492	-43	2222	52.24	39.82	0.71
302	SLV 7	729	124	5524	-117.66	-49.49	-2.04
302	SLV 8	729	124	5524	-117.66	-49.49	-2.04
302	SLV 9	-1193	-59	1401	65.33	-13.84	0.93
302	SLV 10	-1193	-59	1401	65.33	-13.84	0.93
302	SLV 11	27	108	4703	-104.57	-103.16	-1.82
302	SLV 12	27	108	4703	-104.57	-103.16	-1.82
302	SLV 13	-1585	-19	1599	21.13	-107.71	0.23
302	SLV 14	-1585	-19	1599	21.13	-107.71	0.23
302	SLV 15	-1218	31	2590	-29.84	-134.51	-0.59
302	SLV 16	-1218	31	2590	-29.84	-134.51	-0.59
303	SLU 1	-68	31	3057	-25.43	7.84	-0.17
303	SLU 2	-57	30	3009	-25.1	8.23	-0.17
303	SLU 3	-69	32	3141	-26.54	8.35	-0.18
303	SLU 4	-62	32	3113	-26.35	8.59	-0.18
303	SLU 5	-57	31	3074	-25.93	8.65	-0.17
303	SLU 6	-70	33	3206	-27.38	8.76	-0.18
303	SLU 7	-63	33	3177	-27.18	9	-0.18
303	SLU 8	-69	33	3186	-27.1	8.67	-0.18
303	SLU 9	-63	33	3157	-26.9	8.9	-0.18
303	SLU 10	-56	34	3400	-28.24	9.8	-0.19
303	SLU 11	-68	36	3532	-29.68	9.92	-0.2
303	SLU 12	-61	36	3504	-29.48	10.16	-0.2
303	SLU 13	-57	35	3465	-29.07	10.22	-0.19
303	SLU 14	-69	37	3596	-30.51	10.33	-0.2
303	SLU 15	-62	37	3568	-30.31	10.57	-0.2
303	SLU 16	-69	37	3576	-30.23	10.24	-0.2
303	SLU 17	-62	36	3548	-30.03	10.47	-0.2
303	SLU 18	-67	36	3615	-29.91	10.08	-0.2
303	SLU 19	-60	36	3586	-29.72	10.32	-0.2
303	SLU 20	-68	37	3679	-30.74	10.5	-0.21
303	SLU 21	-61	37	3651	-30.55	10.73	-0.2

Nodo	Cont.	Reazione a traslazione			Reazione a rotazione		
Ind.	N.br.	x	y	z	x	y	z
303	SLU 22	-68	35	3438	-28.73	9.42	-0.19
303	SLU 23	-57	34	3390	-28.4	9.81	-0.19
303	SLU 24	-69	36	3522	-29.84	9.93	-0.2
303	SLU 25	-62	36	3494	-29.64	10.16	-0.2
303	SLU 26	-58	35	3455	-29.23	10.22	-0.2
303	SLU 27	-70	37	3587	-30.67	10.34	-0.21
303	SLU 28	-63	37	3558	-30.47	10.57	-0.2
303	SLU 29	-70	37	3567	-30.39	10.24	-0.2
303	SLU 30	-63	36	3538	-30.19	10.48	-0.2
303	SLU 31	-56	38	3781	-31.54	11.38	-0.21
303	SLU 32	-68	40	3913	-32.98	11.5	-0.22
303	SLU 33	-62	40	3885	-32.78	11.73	-0.22
303	SLU 34	-57	39	3845	-32.37	11.79	-0.22
303	SLU 35	-69	41	3977	-33.81	11.91	-0.23
303	SLU 36	-62	41	3949	-33.61	12.14	-0.22
303	SLU 37	-69	41	3957	-33.53	11.81	-0.22
303	SLU 38	-62	40	3929	-33.33	12.05	-0.22
303	SLU 39	-67	40	3996	-33.21	11.66	-0.22
303	SLU 40	-60	40	3967	-33.01	11.89	-0.22
303	SLU 41	-68	41	4060	-34.04	12.07	-0.23
303	SLU 42	-61	41	4032	-33.84	12.31	-0.23
303	SLU 43	-88	39	3843	-31.93	9.66	-0.21
303	SLU 44	-77	38	3796	-31.6	10.05	-0.21
303	SLU 45	-89	40	3928	-33.04	10.16	-0.22
303	SLU 46	-82	40	3899	-32.85	10.4	-0.22
303	SLU 47	-78	39	3860	-32.43	10.46	-0.22
303	SLU 48	-90	41	3992	-33.88	10.58	-0.23
303	SLU 49	-83	41	3964	-33.68	10.81	-0.23
303	SLU 50	-90	41	3972	-33.6	10.48	-0.23
303	SLU 51	-83	40	3944	-33.4	10.72	-0.22
303	SLU 52	-76	42	4186	-34.74	11.62	-0.23
303	SLU 53	-88	44	4318	-36.18	11.73	-0.24
303	SLU 54	-82	43	4290	-35.98	11.97	-0.24
303	SLU 55	-77	43	4251	-35.57	12.03	-0.24
303	SLU 56	-89	45	4383	-37.01	12.15	-0.25
303	SLU 57	-82	44	4354	-36.81	12.38	-0.25
303	SLU 58	-89	44	4363	-36.73	12.05	-0.25
303	SLU 59	-82	44	4334	-36.53	12.29	-0.24
303	SLU 60	-87	44	4401	-36.41	11.9	-0.24
303	SLU 61	-80	44	4373	-36.21	12.13	-0.24
303	SLU 62	-88	45	4466	-37.24	12.31	-0.25
303	SLU 63	-81	45	4437	-37.05	12.54	-0.25
303	SLU 64	-88	43	4224	-35.23	11.23	-0.24
303	SLU 65	-77	42	4177	-34.9	11.62	-0.23
303	SLU 66	-89	44	4309	-36.34	11.74	-0.24
303	SLU 67	-83	44	4280	-36.14	11.97	-0.24
303	SLU 68	-78	43	4241	-35.73	12.03	-0.24
303	SLU 69	-90	45	4373	-37.17	12.15	-0.25
303	SLU 70	-83	45	4345	-36.97	12.39	-0.25
303	SLU 71	-90	45	4353	-36.89	12.06	-0.25
303	SLU 72	-83	44	4325	-36.69	12.29	-0.25
303	SLU 73	-76	46	4567	-38.04	13.19	-0.25
303	SLU 74	-89	48	4699	-39.48	13.31	-0.26
303	SLU 75	-82	47	4671	-39.28	13.54	-0.26
303	SLU 76	-77	47	4632	-38.87	13.6	-0.26
303	SLU 77	-89	49	4764	-40.31	13.72	-0.27
303	SLU 78	-83	48	4735	-40.11	13.96	-0.27
303	SLU 79	-89	48	4744	-40.03	13.62	-0.27
303	SLU 80	-82	48	4715	-39.83	13.86	-0.27
303	SLU 81	-87	48	4782	-39.71	13.47	-0.27
303	SLU 82	-81	48	4754	-39.51	13.71	-0.26
303	SLU 83	-88	49	4847	-40.54	13.88	-0.27
303	SLU 84	-81	49	4818	-40.34	14.12	-0.27
303	SLE RA 1	-68	32	3166	-26.38	8.29	-0.18
303	SLE RA 2	-60	32	3134	-26.15	8.55	-0.18
303	SLE RA 3	-69	33	3222	-27.12	8.63	-0.18
303	SLE RA 4	-64	33	3203	-26.98	8.79	-0.18
303	SLE RA 5	-61	32	3177	-26.71	8.83	-0.18
303	SLE RA 6	-69	33	3265	-27.67	8.91	-0.19
303	SLE RA 7	-65	33	3246	-27.54	9.06	-0.18
303	SLE RA 8	-69	33	3252	-27.48	8.84	-0.18
303	SLE RA 9	-64	33	3233	-27.35	9	-0.18
303	SLE RA 10	-60	34	3394	-28.25	9.6	-0.19
303	SLE RA 11	-68	35	3482	-29.21	9.68	-0.2
303	SLE RA 12	-64	35	3463	-29.07	9.83	-0.19
303	SLE RA 13	-60	35	3437	-28.8	9.87	-0.19
303	SLE RA 14	-69	36	3525	-29.76	9.95	-0.2
303	SLE RA 15	-64	36	3506	-29.63	10.11	-0.2
303	SLE RA 16	-68	36	3512	-29.57	9.89	-0.2
303	SLE RA 17	-64	36	3493	-29.44	10.05	-0.2
303	SLE RA 18	-67	35	3538	-29.36	9.79	-0.2
303	SLE RA 19	-63	35	3519	-29.23	9.94	-0.2
303	SLE RA 20	-68	36	3581	-29.92	10.06	-0.2
303	SLE RA 21	-63	36	3562	-29.78	10.22	-0.2
303	SLE FR 1	-68	32	3166	-26.38	8.29	-0.18
303	SLE FR 2	-66	32	3159	-26.33	8.34	-0.18
303	SLE FR 3	-68	32	3183	-26.6	8.4	-0.18
303	SLE FR 4	-66	33	3271	-27.23	8.79	-0.18
303	SLE FR 5	-68	33	3294	-27.49	8.85	-0.18
303	SLE FR 6	-68	34	3352	-27.87	9.04	-0.19

Nodo	Cont.	Reazione a traslazione			Reazione a rotazione		
Ind.	N.br.	x	y	z	x	y	z
303	SLE QP 1	-68	32	3166	-26.38	8.29	-0.18
303	SLE QP 2	-68	33	3277	-27.27	8.74	-0.18
303	SLD 1	387	32	3595	-25.23	44.82	-0.17
303	SLD 2	387	32	3595	-25.23	44.82	-0.17
303	SLD 3	535	54	3975	-47.12	57.02	-0.3
303	SLD 4	535	54	3975	-47.12	57.02	-0.3
303	SLD 5	-155	0	2796	6.53	1.06	0.02
303	SLD 6	-155	0	2796	6.53	1.06	0.02
303	SLD 7	337	72	4063	-66.42	41.73	-0.42
303	SLD 8	337	72	4063	-66.42	41.73	-0.42
303	SLD 9	-473	-6	2491	11.87	-24.24	0.05
303	SLD 10	-473	-6	2491	11.87	-24.24	0.05
303	SLD 11	20	66	3758	-61.07	16.42	-0.39
303	SLD 12	20	66	3758	-61.07	16.42	-0.39
303	SLD 13	-670	12	2579	-7.43	-39.54	-0.06
303	SLD 14	-670	12	2579	-7.43	-39.54	-0.06
303	SLD 15	-523	34	2959	-29.31	-27.34	-0.19
303	SLD 16	-523	34	2959	-29.31	-27.34	-0.19
303	SLV 1	990	30	4004	-20.94	92.64	-0.15
303	SLV 2	990	30	4004	-20.94	92.64	-0.15
303	SLV 3	1346	84	4930	-75.73	122.12	-0.48
303	SLV 4	1346	84	4930	-75.73	122.12	-0.48
303	SLV 5	-290	-50	2091	57.72	-10.79	0.33
303	SLV 6	-290	-50	2091	57.72	-10.79	0.33
303	SLV 7	896	131	5178	-124.9	87.45	-0.77
303	SLV 8	896	131	5178	-124.9	87.45	-0.77
303	SLV 9	-1031	-65	1377	70.36	-69.97	0.41
303	SLV 10	-1031	-65	1377	70.36	-69.97	0.41
303	SLV 11	154	116	4464	-112.26	28.27	-0.7
303	SLV 12	154	116	4464	-112.26	28.27	-0.7
303	SLV 13	-1482	-18	1624	21.18	-104.64	0.11
303	SLV 14	-1482	-18	1624	21.18	-104.64	0.11
303	SLV 15	-1126	36	2551	-33.6	-75.16	-0.22
303	SLV 16	-1126	36	2551	-33.6	-75.16	-0.22
304	SLU 1	119	31	3018	-25.74	0.48	-0.08
304	SLU 2	127	31	2983	-25.43	1.12	-0.08
304	SLU 3	126	33	3100	-26.86	0.64	-0.08
304	SLU 4	130	33	3078	-26.68	1.03	-0.08
304	SLU 5	132	32	3043	-26.26	1.24	-0.08
304	SLU 6	131	34	3160	-27.69	0.75	-0.08
304	SLU 7	135	34	3139	-27.51	1.14	-0.08
304	SLU 8	129	33	3140	-27.41	0.7	-0.08
304	SLU 9	134	33	3118	-27.22	1.09	-0.08
304	SLU 10	154	35	3378	-28.65	1.93	-0.09
304	SLU 11	153	37	3495	-30.08	1.45	-0.09
304	SLU 12	157	36	3474	-29.89	1.84	-0.09
304	SLU 13	159	36	3439	-29.48	2.05	-0.09
304	SLU 14	158	38	3556	-30.91	1.56	-0.09
304	SLU 15	162	37	3534	-30.72	1.95	-0.09
304	SLU 16	156	37	3535	-30.62	1.51	-0.09
304	SLU 17	161	37	3514	-30.43	1.9	-0.09
304	SLU 18	158	37	3583	-30.34	1.63	-0.09
304	SLU 19	162	37	3562	-30.15	2.02	-0.09
304	SLU 20	163	38	3644	-31.17	1.75	-0.09
304	SLU 21	167	38	3622	-30.98	2.13	-0.09
304	SLU 22	145	36	3401	-29.11	1.2	-0.09
304	SLU 23	152	35	3366	-28.8	1.85	-0.09
304	SLU 24	152	37	3483	-30.23	1.36	-0.09
304	SLU 25	156	37	3461	-30.05	1.75	-0.09
304	SLU 26	157	36	3427	-29.63	1.96	-0.09
304	SLU 27	157	38	3543	-31.07	1.48	-0.09
304	SLU 28	161	38	3522	-30.88	1.86	-0.09
304	SLU 29	155	38	3523	-30.78	1.43	-0.09
304	SLU 30	159	37	3501	-30.59	1.82	-0.09
304	SLU 31	179	39	3761	-32.02	2.66	-0.1
304	SLU 32	179	41	3878	-33.45	2.17	-0.1
304	SLU 33	183	41	3857	-33.26	2.56	-0.1
304	SLU 34	184	40	3822	-32.85	2.77	-0.1
304	SLU 35	184	42	3939	-34.28	2.29	-0.1
304	SLU 36	188	42	3917	-34.09	2.67	-0.1
304	SLU 37	182	41	3918	-33.99	2.24	-0.1
304	SLU 38	186	41	3897	-33.81	2.63	-0.1
304	SLU 39	184	41	3966	-33.71	2.36	-0.1
304	SLU 40	188	41	3945	-33.52	2.75	-0.1
304	SLU 41	189	42	4027	-34.54	2.47	-0.1
304	SLU 42	193	42	4005	-34.35	2.86	-0.1
304	SLU 43	146	39	3792	-32.31	0.37	-0.1
304	SLU 44	154	39	3757	-32	1.02	-0.1
304	SLU 45	153	41	3874	-33.43	0.53	-0.1
304	SLU 46	157	41	3852	-33.24	0.92	-0.1
304	SLU 47	159	40	3818	-32.83	1.13	-0.1
304	SLU 48	158	42	3934	-34.26	0.65	-0.1
304	SLU 49	162	42	3913	-34.07	1.03	-0.1
304	SLU 50	156	41	3914	-33.97	0.6	-0.1
304	SLU 51	160	41	3893	-33.79	0.98	-0.1
304	SLU 52	181	43	4152	-35.21	1.83	-0.11
304	SLU 53	180	45	4269	-36.65	1.34	-0.11
304	SLU 54	184	44	4248	-36.46	1.73	-0.11
304	SLU 55	186	44	4213	-36.05	1.94	-0.11
304	SLU 56	185	46	4330	-37.48	1.46	-0.11

Nodo	Cont.	Reazione a traslazione			Reazione a rotazione		
Ind.	N.br.	x	y	z	x	y	z
304	SLU 57	189	45	4308	-37.29	1.84	-0.11
304	SLU 58	183	45	4309	-37.19	1.41	-0.11
304	SLU 59	188	45	4288	-37	1.79	-0.11
304	SLU 60	185	45	4357	-36.9	1.53	-0.11
304	SLU 61	189	45	4336	-36.72	1.92	-0.11
304	SLU 62	190	46	4418	-37.74	1.64	-0.11
304	SLU 63	194	46	4396	-37.55	2.03	-0.11
304	SLU 64	172	44	4175	-35.68	1.1	-0.11
304	SLU 65	179	43	4140	-35.37	1.74	-0.11
304	SLU 66	179	45	4257	-36.8	1.26	-0.11
304	SLU 67	183	45	4235	-36.61	1.65	-0.11
304	SLU 68	184	44	4201	-36.2	1.86	-0.11
304	SLU 69	184	46	4317	-37.63	1.37	-0.11
304	SLU 70	188	46	4296	-37.45	1.76	-0.11
304	SLU 71	182	46	4297	-37.34	1.32	-0.11
304	SLU 72	186	45	4276	-37.16	1.71	-0.11
304	SLU 73	206	47	4535	-38.59	2.55	-0.12
304	SLU 74	206	49	4652	-40.02	2.07	-0.12
304	SLU 75	210	49	4631	-39.83	2.46	-0.12
304	SLU 76	211	48	4596	-39.42	2.67	-0.12
304	SLU 77	211	50	4713	-40.85	2.18	-0.12
304	SLU 78	215	50	4691	-40.66	2.57	-0.12
304	SLU 79	209	50	4692	-40.56	2.13	-0.12
304	SLU 80	213	49	4671	-40.37	2.52	-0.12
304	SLU 81	211	49	4740	-40.28	2.26	-0.12
304	SLU 82	215	49	4719	-40.09	2.64	-0.12
304	SLU 83	216	50	4801	-41.11	2.37	-0.12
304	SLU 84	220	50	4780	-40.92	2.76	-0.12
304	SLE RA 1	127	33	3128	-26.71	0.68	-0.08
304	SLE RA 2	132	32	3104	-26.5	1.12	-0.08
304	SLE RA 3	131	34	3182	-27.45	0.79	-0.08
304	SLE RA 4	134	33	3168	-27.33	1.05	-0.08
304	SLE RA 5	135	33	3144	-27.05	1.19	-0.08
304	SLE RA 6	134	34	3222	-28.01	0.87	-0.08
304	SLE RA 7	137	34	3208	-27.88	1.13	-0.08
304	SLE RA 8	133	34	3209	-27.81	0.84	-0.08
304	SLE RA 9	136	34	3194	-27.69	1.09	-0.08
304	SLE RA 10	150	35	3368	-28.64	1.66	-0.09
304	SLE RA 11	149	36	3445	-29.6	1.33	-0.09
304	SLE RA 12	152	36	3431	-29.47	1.59	-0.09
304	SLE RA 13	153	36	3408	-29.2	1.73	-0.09
304	SLE RA 14	152	37	3486	-30.15	1.41	-0.09
304	SLE RA 15	155	37	3472	-30.03	1.67	-0.09
304	SLE RA 16	151	37	3472	-29.96	1.38	-0.09
304	SLE RA 17	154	36	3458	-29.83	1.63	-0.09
304	SLE RA 18	152	36	3504	-29.77	1.46	-0.09
304	SLE RA 19	155	36	3490	-29.64	1.71	-0.09
304	SLE RA 20	156	37	3545	-30.32	1.53	-0.09
304	SLE RA 21	159	37	3530	-30.2	1.79	-0.09
304	SLE FR 1	127	33	3128	-26.71	0.68	-0.08
304	SLE FR 2	128	33	3123	-26.66	0.77	-0.08
304	SLE FR 3	128	33	3144	-26.93	0.72	-0.08
304	SLE FR 4	135	34	3236	-27.58	1	-0.08
304	SLE FR 5	136	34	3257	-27.85	0.95	-0.08
304	SLE FR 6	140	34	3316	-28.24	1.07	-0.08
304	SLE QP 1	127	33	3128	-26.71	0.68	-0.08
304	SLE QP 2	134	34	3241	-27.62	0.92	-0.08
304	SLD 1	617	32	3552	-25.16	36.29	-0.1
304	SLD 2	617	32	3552	-25.16	36.29	-0.1
304	SLD 3	772	54	3903	-47.24	47.62	-0.13
304	SLD 4	772	54	3903	-47.24	47.62	-0.13
304	SLD 5	43	0	2802	6.6	-5.66	-0.03
304	SLD 6	43	0	2802	6.6	-5.66	-0.03
304	SLD 7	562	73	3971	-67	32.12	-0.15
304	SLD 8	562	73	3971	-67	32.12	-0.15
304	SLD 9	-293	-6	2510	11.75	-30.29	-0.01
304	SLD 10	-293	-6	2510	11.75	-30.29	-0.01
304	SLD 11	226	67	3679	-61.85	7.5	-0.13
304	SLD 12	226	67	3679	-61.85	7.5	-0.13
304	SLD 13	-503	13	2579	-8.01	-45.79	-0.03
304	SLD 14	-503	13	2579	-8.01	-45.79	-0.03
304	SLD 15	-348	35	2929	-30.09	-34.46	-0.07
304	SLD 16	-348	35	2929	-30.09	-34.46	-0.07
304	SLV 1	1256	29	3952	-20.25	83.22	-0.11
304	SLV 2	1256	29	3952	-20.25	83.22	-0.11
304	SLV 3	1631	84	4808	-75.52	110.52	-0.2
304	SLV 4	1631	84	4808	-75.52	110.52	-0.2
304	SLV 5	-97	-51	2154	58.42	-15.8	0.05
304	SLV 6	-97	-51	2154	58.42	-15.8	0.05
304	SLV 7	1152	132	5010	-125.83	75.2	-0.26
304	SLV 8	1152	132	5010	-125.83	75.2	-0.26
304	SLV 9	-883	-65	1471	70.58	-73.37	0.09
304	SLV 10	-883	-65	1471	70.58	-73.37	0.09
304	SLV 11	366	118	4327	-113.67	17.63	-0.21
304	SLV 12	366	118	4327	-113.67	17.63	-0.21
304	SLV 13	-1362	-17	1673	20.27	-108.68	0.04
304	SLV 14	-1362	-17	1673	20.27	-108.68	0.04
304	SLV 15	-988	38	2530	-35	-81.39	-0.05
304	SLV 16	-988	38	2530	-35	-81.39	-0.05
305	SLU 1	254	32	3163	-25.28	20.69	0.33

Nodo	Cont.	Reazione a traslazione			Reazione a rotazione		
Ind.	N.br.	x	y	z	x	y	z
305	SLU 2	257	31	3136	-25	20.73	0.32
305	SLU 3	267	33	3248	-26.38	21.84	0.34
305	SLU 4	269	33	3232	-26.21	21.86	0.34
305	SLU 5	267	32	3198	-25.81	21.61	0.33
305	SLU 6	277	34	3310	-27.18	22.72	0.35
305	SLU 7	279	34	3294	-27.01	22.74	0.35
305	SLU 8	274	34	3287	-26.89	22.45	0.35
305	SLU 9	276	33	3271	-26.73	22.48	0.34
305	SLU 10	298	35	3561	-28.21	23.89	0.36
305	SLU 11	308	37	3673	-29.58	25	0.38
305	SLU 12	310	37	3657	-29.41	25.02	0.38
305	SLU 13	308	36	3623	-29.01	24.77	0.37
305	SLU 14	317	38	3735	-30.39	25.88	0.39
305	SLU 15	320	38	3719	-30.22	25.9	0.39
305	SLU 16	314	38	3712	-30.1	25.62	0.39
305	SLU 17	316	38	3696	-29.93	25.64	0.39
305	SLU 18	311	37	3770	-29.86	25.21	0.38
305	SLU 19	314	37	3754	-29.69	25.23	0.38
305	SLU 20	321	38	3832	-30.67	26.09	0.39
305	SLU 21	324	38	3816	-30.5	26.11	0.39
305	SLU 22	295	36	3573	-28.63	23.96	0.37
305	SLU 23	299	36	3546	-28.35	24	0.36
305	SLU 24	308	37	3658	-29.72	25.11	0.38
305	SLU 25	311	37	3642	-29.55	25.13	0.38
305	SLU 26	309	37	3608	-29.15	24.88	0.38
305	SLU 27	318	38	3720	-30.53	25.99	0.39
305	SLU 28	321	38	3704	-30.36	26.01	0.39
305	SLU 29	315	38	3697	-30.24	25.73	0.39
305	SLU 30	317	38	3681	-30.07	25.75	0.39
305	SLU 31	339	40	3971	-31.55	27.16	0.41
305	SLU 32	349	41	4083	-32.93	28.27	0.42
305	SLU 33	351	41	4067	-32.76	28.29	0.42
305	SLU 34	349	41	4033	-32.36	28.04	0.42
305	SLU 35	359	42	4145	-33.73	29.15	0.43
305	SLU 36	361	42	4129	-33.56	29.17	0.43
305	SLU 37	355	42	4122	-33.45	28.89	0.43
305	SLU 38	357	42	4106	-33.28	28.91	0.43
305	SLU 39	353	42	4180	-33.21	28.48	0.43
305	SLU 40	355	41	4164	-33.04	28.5	0.43
305	SLU 41	363	43	4242	-34.01	29.36	0.44
305	SLU 42	365	42	4226	-33.84	29.38	0.44
305	SLU 43	316	40	3971	-31.72	25.77	0.41
305	SLU 44	319	39	3944	-31.44	25.81	0.4
305	SLU 45	329	41	4056	-32.81	26.92	0.42
305	SLU 46	331	41	4040	-32.65	26.94	0.42
305	SLU 47	329	40	4006	-32.25	26.7	0.42
305	SLU 48	339	42	4118	-33.62	27.8	0.43
305	SLU 49	341	42	4102	-33.45	27.83	0.43
305	SLU 50	335	42	4095	-33.33	27.54	0.43
305	SLU 51	338	42	4079	-33.16	27.56	0.43
305	SLU 52	360	43	4369	-34.64	28.97	0.45
305	SLU 53	369	45	4481	-36.02	30.08	0.46
305	SLU 54	372	45	4465	-35.85	30.11	0.46
305	SLU 55	370	44	4431	-35.45	29.86	0.46
305	SLU 56	379	46	4543	-36.82	30.97	0.47
305	SLU 57	382	46	4527	-36.66	30.99	0.47
305	SLU 58	376	46	4520	-36.54	30.7	0.47
305	SLU 59	378	46	4504	-36.37	30.73	0.47
305	SLU 60	373	46	4578	-36.3	30.29	0.47
305	SLU 61	376	45	4562	-36.13	30.31	0.46
305	SLU 62	383	47	4640	-37.1	31.17	0.48
305	SLU 63	386	46	4624	-36.94	31.2	0.48
305	SLU 64	357	44	4381	-35.07	29.04	0.45
305	SLU 65	361	44	4354	-34.79	29.08	0.45
305	SLU 66	370	45	4466	-36.16	30.19	0.47
305	SLU 67	373	45	4450	-35.99	30.21	0.46
305	SLU 68	371	45	4416	-35.59	29.97	0.46
305	SLU 69	380	46	4528	-36.97	31.07	0.48
305	SLU 70	382	46	4512	-36.8	31.1	0.47
305	SLU 71	377	46	4505	-36.68	30.81	0.47
305	SLU 72	379	46	4489	-36.51	30.83	0.47
305	SLU 73	401	48	4779	-37.99	32.24	0.49
305	SLU 74	411	49	4891	-39.37	33.35	0.51
305	SLU 75	413	49	4875	-39.2	33.38	0.5
305	SLU 76	411	49	4841	-38.8	33.13	0.5
305	SLU 77	421	50	4953	-40.17	34.24	0.52
305	SLU 78	423	50	4937	-40	34.26	0.51
305	SLU 79	417	50	4931	-39.88	33.97	0.51
305	SLU 80	419	50	4914	-39.71	34	0.51
305	SLU 81	415	50	4988	-39.65	33.56	0.51
305	SLU 82	417	50	4972	-39.48	33.58	0.51
305	SLU 83	425	51	5051	-40.45	34.44	0.52
305	SLU 84	427	51	5034	-40.28	34.47	0.52
305	SLE RA 1	265	33	3280	-26.24	21.62	0.34
305	SLE RA 2	268	33	3262	-26.05	21.65	0.34
305	SLE RA 3	274	34	3337	-26.97	22.39	0.35
305	SLE RA 4	276	34	3326	-26.86	22.4	0.35
305	SLE RA 5	275	33	3303	-26.59	22.24	0.34
305	SLE RA 6	281	34	3378	-27.51	22.98	0.35
305	SLE RA 7	283	34	3367	-27.39	22.99	0.35

Nodo	Cont.	Reazione a traslazione			Reazione a rotazione		
Ind.	N.br.	x	y	z	x	y	z
305	SLE RA 8	279	34	3363	-27.31	22.8	0.35
305	SLE RA 9	280	34	3352	-27.2	22.82	0.35
305	SLE RA 10	295	35	3545	-28.19	23.76	0.36
305	SLE RA 11	301	37	3620	-29.1	24.5	0.37
305	SLE RA 12	303	36	3609	-28.99	24.51	0.37
305	SLE RA 13	302	36	3587	-28.73	24.35	0.37
305	SLE RA 14	308	37	3661	-29.64	25.08	0.38
305	SLE RA 15	309	37	3651	-29.53	25.1	0.38
305	SLE RA 16	306	37	3646	-29.45	24.91	0.38
305	SLE RA 17	307	37	3635	-29.34	24.92	0.38
305	SLE RA 18	304	37	3685	-29.29	24.63	0.38
305	SLE RA 19	305	37	3674	-29.18	24.65	0.38
305	SLE RA 20	311	37	3726	-29.83	25.22	0.38
305	SLE RA 21	312	37	3715	-29.72	25.24	0.38
305	SLE FR 1	265	33	3280	-26.24	21.62	0.34
305	SLE FR 2	266	33	3276	-26.2	21.63	0.34
305	SLE FR 3	268	33	3296	-26.45	21.86	0.34
305	SLE FR 4	277	34	3398	-27.12	22.53	0.35
305	SLE FR 5	280	34	3418	-27.37	22.76	0.35
305	SLE FR 6	285	35	3482	-27.77	23.13	0.36
305	SLE QP 1	265	33	3280	-26.24	21.62	0.34
305	SLE QP 2	277	34	3401	-27.16	22.53	0.35
305	SLD 1	779	33	3731	-24.9	62.5	0.36
305	SLD 2	779	33	3731	-24.9	62.5	0.36
305	SLD 3	938	54	4046	-45.85	76.2	0.56
305	SLD 4	938	54	4046	-45.85	76.2	0.56
305	SLD 5	186	3	3022	5.3	13.75	0.05
305	SLD 6	186	3	3022	5.3	13.75	0.05
305	SLD 7	717	71	4073	-64.55	59.39	0.71
305	SLD 8	717	71	4073	-64.55	59.39	0.71
305	SLD 9	-163	-3	2729	10.23	-14.34	-0.01
305	SLD 10	-163	-3	2729	10.23	-14.34	-0.01
305	SLD 11	368	65	3781	-59.61	31.3	0.65
305	SLD 12	368	65	3781	-59.61	31.3	0.65
305	SLD 13	-384	14	2756	-8.46	-31.14	0.14
305	SLD 14	-384	14	2756	-8.46	-31.14	0.14
305	SLD 15	-225	35	3072	-29.41	-17.45	0.34
305	SLD 16	-225	35	3072	-29.41	-17.45	0.34
305	SLV 1	1446	31	4158	-20.32	115.55	0.36
305	SLV 2	1446	31	4158	-20.32	115.55	0.36
305	SLV 3	1828	82	4926	-72.76	148.56	0.85
305	SLV 4	1828	82	4926	-72.76	148.56	0.85
305	SLV 5	48	-44	2463	54.42	0.38	-0.4
305	SLV 6	48	-44	2463	54.42	0.38	-0.4
305	SLV 7	1322	126	5024	-120.37	110.39	1.25
305	SLV 8	1322	126	5024	-120.37	110.39	1.25
305	SLV 9	-768	-58	1779	66.06	-65.34	-0.55
305	SLV 10	-768	-58	1779	66.06	-65.34	-0.55
305	SLV 11	505	112	4340	-108.73	44.67	1.1
305	SLV 12	505	112	4340	-108.73	44.67	1.1
305	SLV 13	-1275	-14	1877	18.45	-103.5	-0.15
305	SLV 14	-1275	-14	1877	18.45	-103.5	-0.15
305	SLV 15	-893	37	2645	-33.99	-70.5	0.34
305	SLV 16	-893	37	2645	-33.99	-70.5	0.34
306	SLU 1	309	30	3425	-23.65	15.63	0.24
306	SLU 2	311	30	3404	-23.41	15.74	0.23
306	SLU 3	326	31	3519	-24.66	16.57	0.25
306	SLU 4	327	31	3507	-24.52	16.63	0.25
306	SLU 5	323	31	3472	-24.15	16.43	0.24
306	SLU 6	338	32	3587	-25.41	17.26	0.26
306	SLU 7	339	32	3574	-25.26	17.33	0.25
306	SLU 8	333	32	3560	-25.13	17.03	0.25
306	SLU 9	334	32	3547	-24.99	17.09	0.25
306	SLU 10	354	34	3874	-26.45	17.92	0.27
306	SLU 11	369	35	3989	-27.7	18.75	0.28
306	SLU 12	370	35	3977	-27.56	18.81	0.28
306	SLU 13	366	34	3942	-27.19	18.61	0.27
306	SLU 14	381	36	4057	-28.45	19.45	0.29
306	SLU 15	382	36	4044	-28.3	19.51	0.28
306	SLU 16	377	36	4030	-28.17	19.21	0.28
306	SLU 17	378	36	4018	-28.03	19.27	0.28
306	SLU 18	371	35	4097	-27.99	18.75	0.28
306	SLU 19	372	35	4084	-27.85	18.81	0.28
306	SLU 20	383	36	4164	-28.73	19.45	0.29
306	SLU 21	384	36	4152	-28.59	19.51	0.29
306	SLU 22	355	34	3878	-26.81	17.99	0.27
306	SLU 23	357	34	3857	-26.57	18.1	0.27
306	SLU 24	372	35	3972	-27.83	18.93	0.28
306	SLU 25	373	35	3959	-27.68	18.99	0.28
306	SLU 26	369	35	3924	-27.31	18.79	0.27
306	SLU 27	384	36	4039	-28.57	19.63	0.29
306	SLU 28	385	36	4027	-28.42	19.69	0.29
306	SLU 29	379	36	4013	-28.3	19.39	0.28
306	SLU 30	380	36	4000	-28.15	19.45	0.28
306	SLU 31	400	38	4327	-29.61	20.28	0.3
306	SLU 32	415	39	4442	-30.87	21.11	0.31
306	SLU 33	416	39	4429	-30.72	21.17	0.31
306	SLU 34	412	38	4395	-30.35	20.98	0.31
306	SLU 35	427	40	4509	-31.61	21.81	0.32
306	SLU 36	428	40	4497	-31.46	21.87	0.32

Nodo	Cont.	Reazione a traslazione			Reazione a rotazione		
Ind.	N.br.	x	y	z	x	y	z
306	SLU 37	423	40	4483	-31.34	21.57	0.32
306	SLU 38	424	40	4470	-31.19	21.63	0.31
306	SLU 39	417	40	4549	-31.15	21.11	0.31
306	SLU 40	418	39	4537	-31.01	21.17	0.31
306	SLU 41	429	40	4617	-31.9	21.81	0.32
306	SLU 42	430	40	4604	-31.75	21.87	0.32
306	SLU 43	386	38	4297	-29.66	19.51	0.3
306	SLU 44	388	37	4276	-29.42	19.62	0.3
306	SLU 45	403	39	4391	-30.67	20.45	0.31
306	SLU 46	404	39	4379	-30.53	20.51	0.31
306	SLU 47	400	38	4344	-30.16	20.31	0.3
306	SLU 48	415	40	4459	-31.42	21.14	0.32
306	SLU 49	416	40	4446	-31.27	21.21	0.31
306	SLU 50	410	39	4432	-31.15	20.91	0.31
306	SLU 51	411	39	4420	-31	20.97	0.31
306	SLU 52	431	41	4747	-32.46	21.8	0.33
306	SLU 53	446	43	4861	-33.71	22.63	0.34
306	SLU 54	447	43	4849	-33.57	22.69	0.34
306	SLU 55	443	42	4814	-33.2	22.49	0.33
306	SLU 56	458	44	4929	-34.46	23.33	0.35
306	SLU 57	459	43	4916	-34.31	23.39	0.34
306	SLU 58	454	43	4902	-34.19	23.09	0.34
306	SLU 59	455	43	4890	-34.04	23.15	0.34
306	SLU 60	448	43	4969	-34	22.63	0.34
306	SLU 61	449	43	4956	-33.86	22.69	0.34
306	SLU 62	460	44	5036	-34.75	23.32	0.35
306	SLU 63	461	44	5024	-34.6	23.39	0.35
306	SLU 64	432	42	4750	-32.82	21.87	0.33
306	SLU 65	434	41	4729	-32.58	21.98	0.33
306	SLU 66	449	43	4844	-33.84	22.81	0.34
306	SLU 67	450	43	4832	-33.69	22.87	0.34
306	SLU 68	446	42	4797	-33.32	22.67	0.33
306	SLU 69	461	44	4912	-34.58	23.51	0.35
306	SLU 70	462	44	4899	-34.43	23.57	0.35
306	SLU 71	456	43	4885	-34.31	23.27	0.34
306	SLU 72	457	43	4873	-34.16	23.33	0.34
306	SLU 73	477	45	5199	-35.62	24.16	0.36
306	SLU 74	492	47	5314	-36.88	24.99	0.37
306	SLU 75	493	47	5302	-36.73	25.05	0.37
306	SLU 76	489	46	5267	-36.36	24.86	0.37
306	SLU 77	504	48	5382	-37.62	25.69	0.38
306	SLU 78	505	47	5369	-37.47	25.75	0.38
306	SLU 79	500	47	5355	-37.35	25.45	0.38
306	SLU 80	501	47	5343	-37.2	25.51	0.37
306	SLU 81	494	47	5422	-37.16	24.99	0.37
306	SLU 82	495	47	5409	-37.02	25.05	0.37
306	SLU 83	506	48	5489	-37.91	25.69	0.38
306	SLU 84	507	48	5477	-37.76	25.75	0.38
306	SLE RA 1	322	31	3554	-24.55	16.31	0.25
306	SLE RA 2	323	31	3540	-24.39	16.38	0.24
306	SLE RA 3	333	32	3617	-25.23	16.93	0.25
306	SLE RA 4	334	32	3609	-25.13	16.97	0.25
306	SLE RA 5	331	31	3585	-24.89	16.84	0.25
306	SLE RA 6	341	33	3662	-25.72	17.39	0.26
306	SLE RA 7	342	32	3654	-25.63	17.44	0.26
306	SLE RA 8	338	32	3644	-25.54	17.24	0.26
306	SLE RA 9	339	32	3636	-25.45	17.28	0.26
306	SLE RA 10	352	33	3854	-26.42	17.83	0.27
306	SLE RA 11	362	35	3930	-27.26	18.38	0.27
306	SLE RA 12	363	34	3922	-27.16	18.43	0.27
306	SLE RA 13	360	34	3899	-26.91	18.29	0.27
306	SLE RA 14	370	35	3975	-27.75	18.85	0.28
306	SLE RA 15	371	35	3967	-27.65	18.89	0.28
306	SLE RA 16	367	35	3958	-27.57	18.69	0.28
306	SLE RA 17	368	35	3949	-27.47	18.73	0.28
306	SLE RA 18	364	35	4002	-27.45	18.38	0.28
306	SLE RA 19	364	35	3994	-27.35	18.43	0.27
306	SLE RA 20	372	35	4047	-27.94	18.85	0.28
306	SLE RA 21	372	35	4039	-27.85	18.89	0.28
306	SLE FR 1	322	31	3554	-24.55	16.31	0.25
306	SLE FR 2	322	31	3552	-24.52	16.32	0.25
306	SLE FR 3	325	31	3572	-24.75	16.49	0.25
306	SLE FR 4	335	32	3686	-25.39	16.94	0.26
306	SLE FR 5	338	32	3707	-25.62	17.12	0.26
306	SLE FR 6	343	33	3778	-26	17.35	0.26
306	SLE QP 1	322	31	3554	-24.55	16.31	0.25
306	SLE QP 2	335	32	3689	-25.42	16.93	0.26
306	SLD 1	810	33	4068	-23.86	49.44	0.27
306	SLD 2	810	33	4068	-23.86	49.44	0.27
306	SLD 3	962	50	4339	-42.3	59.87	0.38
306	SLD 4	962	50	4339	-42.3	59.87	0.38
306	SLD 5	248	7	3392	3.01	10.87	0.11
306	SLD 6	248	7	3392	3.01	10.87	0.11
306	SLD 7	752	63	4294	-58.45	45.63	0.45
306	SLD 8	752	63	4294	-58.45	45.63	0.45
306	SLD 9	-83	1	3084	7.61	-11.77	0.06
306	SLD 10	-83	1	3084	7.61	-11.77	0.06
306	SLD 11	422	58	3985	-53.85	22.99	0.41
306	SLD 12	422	58	3985	-53.85	22.99	0.41
306	SLD 13	-293	14	3039	-8.54	-26.01	0.13

Nodo	Cont.	Reazione a traslazione			Reazione a rotazione		
Ind.	N.br.	x	y	z	x	y	z
306	SLD 14	-293	14	3039	-8.54	-26.01	0.13
306	SLD 15	-141	31	3309	-26.98	-15.58	0.24
306	SLD 16	-141	31	3309	-26.98	-15.58	0.24
306	SLV 1	1442	33	4567	-20.4	92.65	0.29
306	SLV 2	1442	33	4567	-20.4	92.65	0.29
306	SLV 3	1806	75	5218	-66.51	117.7	0.55
306	SLV 4	1806	75	5218	-66.51	117.7	0.55
306	SLV 5	116	-32	2965	46.02	1.66	-0.12
306	SLV 6	116	-32	2965	46.02	1.66	-0.12
306	SLV 7	1327	109	5135	-107.68	85.15	0.73
306	SLV 8	1327	109	5135	-107.68	85.15	0.73
306	SLV 9	-658	-45	2243	56.84	-51.29	-0.22
306	SLV 10	-658	-45	2243	56.84	-51.29	-0.22
306	SLV 11	553	96	4412	-96.86	32.2	0.63
306	SLV 12	553	96	4412	-96.86	32.2	0.63
306	SLV 13	-1136	-11	2159	15.67	-83.84	-0.04
306	SLV 14	-1136	-11	2159	15.67	-83.84	-0.04
306	SLV 15	-773	32	2810	-30.44	-58.79	0.22
306	SLV 16	-773	32	2810	-30.44	-58.79	0.22
307	SLU 1	366	27	3794	-20.43	19.25	0.13
307	SLU 2	365	26	3778	-20.24	19.13	0.13
307	SLU 3	386	28	3901	-21.3	20.39	0.14
307	SLU 4	385	28	3892	-21.18	20.32	0.14
307	SLU 5	380	27	3854	-20.87	19.98	0.14
307	SLU 6	401	29	3977	-21.93	21.25	0.14
307	SLU 7	400	28	3967	-21.81	21.17	0.14
307	SLU 8	395	28	3945	-21.69	20.96	0.14
307	SLU 9	395	28	3936	-21.58	20.89	0.14
307	SLU 10	413	30	4307	-22.9	21.59	0.15
307	SLU 11	434	31	4430	-23.96	22.85	0.16
307	SLU 12	433	31	4420	-23.84	22.78	0.16
307	SLU 13	427	31	4382	-23.53	22.44	0.16
307	SLU 14	448	32	4505	-24.59	23.7	0.16
307	SLU 15	448	32	4496	-24.47	23.63	0.16
307	SLU 16	443	32	4474	-24.35	23.42	0.16
307	SLU 17	442	32	4464	-24.24	23.35	0.16
307	SLU 18	434	32	4549	-24.23	22.77	0.16
307	SLU 19	433	32	4539	-24.11	22.69	0.16
307	SLU 20	449	32	4624	-24.86	23.62	0.16
307	SLU 21	448	32	4615	-24.75	23.55	0.16
307	SLU 22	417	30	4303	-23.18	21.98	0.15
307	SLU 23	417	30	4287	-22.99	21.85	0.15
307	SLU 24	438	31	4410	-24.05	23.11	0.16
307	SLU 25	437	31	4401	-23.94	23.04	0.16
307	SLU 26	431	31	4363	-23.62	22.71	0.16
307	SLU 27	452	32	4486	-24.68	23.97	0.16
307	SLU 28	452	32	4476	-24.57	23.89	0.16
307	SLU 29	447	32	4454	-24.45	23.68	0.16
307	SLU 30	446	32	4445	-24.33	23.61	0.16
307	SLU 31	464	34	4816	-25.65	24.31	0.17
307	SLU 32	485	35	4939	-26.71	25.57	0.18
307	SLU 33	485	35	4929	-26.6	25.5	0.18
307	SLU 34	479	34	4891	-26.28	25.17	0.17
307	SLU 35	500	36	5014	-27.34	26.43	0.18
307	SLU 36	499	36	5005	-27.23	26.35	0.18
307	SLU 37	495	35	4983	-27.11	26.14	0.18
307	SLU 38	494	35	4973	-26.99	26.07	0.18
307	SLU 39	486	35	5058	-26.98	25.49	0.18
307	SLU 40	485	35	5048	-26.87	25.41	0.18
307	SLU 41	500	36	5133	-27.61	26.34	0.18
307	SLU 42	500	36	5124	-27.5	26.27	0.18
307	SLU 43	458	33	4758	-25.61	24.1	0.17
307	SLU 44	457	33	4742	-25.42	23.97	0.17
307	SLU 45	478	34	4865	-26.48	25.23	0.17
307	SLU 46	477	34	4856	-26.37	25.16	0.17
307	SLU 47	472	34	4818	-26.05	24.83	0.17
307	SLU 48	493	35	4941	-27.11	26.09	0.18
307	SLU 49	492	35	4931	-27	26.01	0.18
307	SLU 50	487	35	4909	-26.87	25.8	0.18
307	SLU 51	487	35	4899	-26.76	25.73	0.18
307	SLU 52	505	37	5270	-28.08	26.43	0.19
307	SLU 53	526	38	5393	-29.14	27.69	0.19
307	SLU 54	525	38	5384	-29.03	27.62	0.19
307	SLU 55	519	37	5346	-28.71	27.29	0.19
307	SLU 56	540	39	5469	-29.77	28.55	0.2
307	SLU 57	540	39	5459	-29.66	28.47	0.2
307	SLU 58	535	39	5437	-29.54	28.26	0.19
307	SLU 59	534	38	5428	-29.42	28.19	0.19
307	SLU 60	526	38	5513	-29.41	27.61	0.19
307	SLU 61	525	38	5503	-29.3	27.54	0.19
307	SLU 62	541	39	5588	-30.04	28.46	0.2
307	SLU 63	540	39	5579	-29.93	28.39	0.2
307	SLU 64	510	37	5267	-28.36	26.82	0.19
307	SLU 65	509	37	5251	-28.17	26.69	0.19
307	SLU 66	530	38	5374	-29.23	27.96	0.19
307	SLU 67	529	38	5365	-29.12	27.88	0.19
307	SLU 68	523	38	5327	-28.81	27.55	0.19
307	SLU 69	544	39	5450	-29.87	28.81	0.2
307	SLU 70	544	39	5440	-29.75	28.74	0.2
307	SLU 71	539	39	5418	-29.63	28.53	0.2

Nodo	Cont.	Reazione a traslazione			Reazione a rotazione		
Ind.	N.br.	x	y	z	x	y	z
307	SLU 72	538	38	5409	-29.51	28.45	0.19
307	SLU 73	556	40	5779	-30.84	29.15	0.2
307	SLU 74	577	42	5902	-31.89	30.42	0.21
307	SLU 75	577	41	5893	-31.78	30.34	0.21
307	SLU 76	571	41	5855	-31.47	30.01	0.21
307	SLU 77	592	42	5978	-32.53	31.27	0.21
307	SLU 78	591	42	5968	-32.41	31.19	0.21
307	SLU 79	587	42	5946	-32.29	30.99	0.21
307	SLU 80	586	42	5937	-32.18	30.91	0.21
307	SLU 81	578	42	6022	-32.17	30.33	0.21
307	SLU 82	577	42	6012	-32.05	30.26	0.21
307	SLU 83	592	43	6097	-32.8	31.19	0.22
307	SLU 84	592	43	6088	-32.68	31.11	0.22
307	SLE RA 1	381	28	3940	-21.21	20.03	0.14
307	SLE RA 2	380	27	3929	-21.09	19.95	0.14
307	SLE RA 3	394	28	4011	-21.79	20.79	0.14
307	SLE RA 4	394	28	4005	-21.72	20.74	0.14
307	SLE RA 5	390	28	3979	-21.51	20.52	0.14
307	SLE RA 6	404	29	4061	-22.21	21.36	0.15
307	SLE RA 7	403	29	4055	-22.14	21.31	0.15
307	SLE RA 8	400	29	4040	-22.06	21.17	0.15
307	SLE RA 9	400	29	4034	-21.98	21.12	0.14
307	SLE RA 10	412	30	4281	-22.86	21.59	0.15
307	SLE RA 11	426	31	4363	-23.57	22.43	0.16
307	SLE RA 12	425	31	4357	-23.49	22.38	0.15
307	SLE RA 13	422	30	4332	-23.28	22.16	0.15
307	SLE RA 14	436	31	4414	-23.99	23	0.16
307	SLE RA 15	435	31	4407	-23.91	22.95	0.16
307	SLE RA 16	432	31	4393	-23.83	22.81	0.16
307	SLE RA 17	432	31	4386	-23.75	22.76	0.16
307	SLE RA 18	426	31	4443	-23.75	22.37	0.16
307	SLE RA 19	426	31	4436	-23.67	22.32	0.16
307	SLE RA 20	436	32	4493	-24.17	22.94	0.16
307	SLE RA 21	435	31	4487	-24.09	22.89	0.16
307	SLE FR 1	381	28	3940	-21.21	20.03	0.14
307	SLE FR 2	380	28	3938	-21.19	20.01	0.14
307	SLE FR 3	384	28	3960	-21.38	20.26	0.14
307	SLE FR 4	394	29	4088	-21.95	20.72	0.14
307	SLE FR 5	398	29	4111	-22.14	20.96	0.15
307	SLE FR 6	403	29	4191	-22.48	21.2	0.15
307	SLE QP 1	381	28	3940	-21.21	20.03	0.14
307	SLE QP 2	394	29	4091	-21.97	20.73	0.14
307	SLD 1	852	31	4503	-21.29	49.41	0.16
307	SLD 2	852	31	4503	-21.29	49.41	0.16
307	SLD 3	1000	43	4748	-36.03	59.16	0.21
307	SLD 4	1000	43	4748	-36.03	59.16	0.21
307	SLD 5	307	10	3844	0.59	14.55	0.07
307	SLD 6	307	10	3844	0.59	14.55	0.07
307	SLD 7	800	52	4659	-48.55	47.05	0.24
307	SLD 8	800	52	4659	-48.55	47.05	0.24
307	SLD 9	-12	5	3523	4.6	-5.58	0.05
307	SLD 10	-12	5	3523	4.6	-5.58	0.05
307	SLD 11	481	47	4338	-44.54	26.91	0.22
307	SLD 12	481	47	4338	-44.54	26.91	0.22
307	SLD 13	-211	14	3433	-7.92	-17.69	0.08
307	SLD 14	-211	14	3433	-7.92	-17.69	0.08
307	SLD 15	-64	26	3678	-22.66	-7.94	0.13
307	SLD 16	-64	26	3678	-22.66	-7.94	0.13
307	SLV 1	1460	33	5053	-19.27	87.48	0.18
307	SLV 2	1460	33	5053	-19.27	87.48	0.18
307	SLV 3	1815	64	5634	-56.09	110.93	0.31
307	SLV 4	1815	64	5634	-56.09	110.93	0.31
307	SLV 5	176	-17	3498	34.68	5.19	-0.04
307	SLV 6	176	-17	3498	34.68	5.19	-0.04
307	SLV 7	1358	86	5434	-88.05	83.36	0.39
307	SLV 8	1358	86	5434	-88.05	83.36	0.39
307	SLV 9	-570	-29	2747	44.1	-41.89	-0.1
307	SLV 10	-570	-29	2747	44.1	-41.89	-0.1
307	SLV 11	613	74	4683	-78.63	36.28	0.33
307	SLV 12	613	74	4683	-78.63	36.28	0.33
307	SLV 13	-1026	-6	2548	12.14	-69.46	-0.02
307	SLV 14	-1026	-6	2548	12.14	-69.46	-0.02
307	SLV 15	-672	24	3128	-24.68	-46.01	0.11
307	SLV 16	-672	24	3128	-24.68	-46.01	0.11
308	SLU 1	265	19	4254	-15.56	10.91	0.06
308	SLU 2	264	19	4242	-15.43	10.85	0.06
308	SLU 3	282	20	4378	-16.21	11.74	0.07
308	SLU 4	282	20	4371	-16.14	11.71	0.07
308	SLU 5	277	19	4328	-15.9	11.47	0.07
308	SLU 6	295	20	4464	-16.69	12.36	0.07
308	SLU 7	295	20	4457	-16.61	12.33	0.07
308	SLU 8	290	20	4426	-16.51	12.15	0.07
308	SLU 9	290	20	4419	-16.43	12.11	0.07
308	SLU 10	293	21	4840	-17.48	11.92	0.07
308	SLU 11	311	22	4976	-18.27	12.81	0.07
308	SLU 12	311	22	4969	-18.19	12.77	0.07
308	SLU 13	306	22	4926	-17.96	12.53	0.07
308	SLU 14	324	23	5062	-18.74	13.42	0.08
308	SLU 15	324	23	5055	-18.66	13.39	0.08
308	SLU 16	319	22	5024	-18.56	13.21	0.08

Nodo	Cont.	Reazione a traslazione			Reazione a rotazione		
Ind.	N.br.	x	y	z	x	y	z
308	SLU 17	319	22	5017	-18.48	13.18	0.08
308	SLU 18	306	22	5108	-18.49	12.43	0.08
308	SLU 19	306	22	5101	-18.42	12.39	0.08
308	SLU 20	319	23	5194	-18.97	13.05	0.08
308	SLU 21	319	23	5187	-18.89	13.01	0.08
308	SLU 22	300	21	4831	-17.67	12.3	0.07
308	SLU 23	299	21	4819	-17.54	12.25	0.07
308	SLU 24	317	22	4955	-18.33	13.14	0.08
308	SLU 25	317	22	4948	-18.25	13.1	0.07
308	SLU 26	312	22	4905	-18.02	12.86	0.07
308	SLU 27	330	23	5041	-18.8	13.75	0.08
308	SLU 28	329	23	5034	-18.72	13.72	0.08
308	SLU 29	325	23	5003	-18.62	13.54	0.08
308	SLU 30	325	22	4996	-18.54	13.51	0.08
308	SLU 31	328	24	5417	-19.6	13.31	0.08
308	SLU 32	346	25	5553	-20.38	14.2	0.08
308	SLU 33	346	25	5546	-20.3	14.16	0.08
308	SLU 34	341	24	5503	-20.07	13.93	0.08
308	SLU 35	359	25	5639	-20.85	14.82	0.09
308	SLU 36	358	25	5632	-20.77	14.78	0.09
308	SLU 37	354	25	5601	-20.67	14.6	0.08
308	SLU 38	354	25	5594	-20.59	14.57	0.08
308	SLU 39	341	25	5685	-20.61	13.82	0.08
308	SLU 40	341	25	5678	-20.53	13.79	0.08
308	SLU 41	354	26	5771	-21.08	14.44	0.09
308	SLU 42	353	26	5764	-21	14.41	0.09
308	SLU 43	332	24	5332	-19.51	13.7	0.08
308	SLU 44	331	23	5320	-19.38	13.65	0.08
308	SLU 45	350	24	5456	-20.16	14.54	0.08
308	SLU 46	349	24	5449	-20.08	14.5	0.08
308	SLU 47	344	24	5406	-19.85	14.27	0.08
308	SLU 48	363	25	5542	-20.63	15.16	0.08
308	SLU 49	362	25	5535	-20.55	15.12	0.08
308	SLU 50	358	25	5504	-20.45	14.94	0.08
308	SLU 51	357	25	5497	-20.37	14.91	0.08
308	SLU 52	360	26	5918	-21.43	14.71	0.09
308	SLU 53	379	27	6054	-22.21	15.6	0.09
308	SLU 54	378	27	6047	-22.13	15.57	0.09
308	SLU 55	373	27	6004	-21.9	15.33	0.09
308	SLU 56	392	27	6140	-22.68	16.22	0.09
308	SLU 57	391	27	6133	-22.61	16.18	0.09
308	SLU 58	387	27	6102	-22.5	16	0.09
308	SLU 59	386	27	6095	-22.42	15.97	0.09
308	SLU 60	374	27	6187	-22.44	15.22	0.09
308	SLU 61	373	27	6180	-22.36	15.19	0.09
308	SLU 62	387	28	6273	-22.91	15.84	0.09
308	SLU 63	386	28	6266	-22.83	15.81	0.09
308	SLU 64	367	26	5909	-21.62	15.1	0.09
308	SLU 65	366	26	5897	-21.49	15.04	0.09
308	SLU 66	385	27	6033	-22.27	15.93	0.09
308	SLU 67	384	27	6026	-22.19	15.9	0.09
308	SLU 68	379	27	5983	-21.96	15.66	0.09
308	SLU 69	397	28	6119	-22.74	16.55	0.09
308	SLU 70	397	27	6112	-22.67	16.52	0.09
308	SLU 71	393	27	6081	-22.56	16.33	0.09
308	SLU 72	392	27	6074	-22.48	16.3	0.09
308	SLU 73	395	29	6495	-23.54	16.1	0.1
308	SLU 74	414	29	6631	-24.32	16.99	0.1
308	SLU 75	413	29	6624	-24.25	16.96	0.1
308	SLU 76	408	29	6581	-24.01	16.72	0.1
308	SLU 77	426	30	6717	-24.8	17.61	0.1
308	SLU 78	426	30	6710	-24.72	17.58	0.1
308	SLU 79	422	30	6679	-24.62	17.4	0.1
308	SLU 80	421	30	6672	-24.54	17.36	0.1
308	SLU 81	409	30	6764	-24.55	16.62	0.1
308	SLU 82	408	30	6757	-24.47	16.58	0.1
308	SLU 83	421	30	6850	-25.02	17.24	0.1
308	SLU 84	421	30	6843	-24.94	17.2	0.1
308	SLE RA 1	275	20	4419	-16.16	11.31	0.07
308	SLE RA 2	274	19	4411	-16.08	11.27	0.07
308	SLE RA 3	286	20	4501	-16.6	11.86	0.07
308	SLE RA 4	286	20	4497	-16.55	11.84	0.07
308	SLE RA 5	283	20	4468	-16.39	11.68	0.07
308	SLE RA 6	295	20	4559	-16.92	12.27	0.07
308	SLE RA 7	295	20	4554	-16.86	12.25	0.07
308	SLE RA 8	292	20	4534	-16.79	12.13	0.07
308	SLE RA 9	291	20	4529	-16.74	12.11	0.07
308	SLE RA 10	293	21	4810	-17.45	11.98	0.07
308	SLE RA 11	306	22	4900	-17.97	12.57	0.07
308	SLE RA 12	305	22	4895	-17.92	12.55	0.07
308	SLE RA 13	302	22	4867	-17.76	12.39	0.07
308	SLE RA 14	314	22	4957	-18.28	12.98	0.08
308	SLE RA 15	314	22	4953	-18.23	12.96	0.07
308	SLE RA 16	311	22	4932	-18.16	12.84	0.07
308	SLE RA 17	311	22	4927	-18.11	12.82	0.07
308	SLE RA 18	302	22	4988	-18.12	12.32	0.07
308	SLE RA 19	302	22	4984	-18.07	12.3	0.07
308	SLE RA 20	311	22	5046	-18.43	12.73	0.08
308	SLE RA 21	311	22	5041	-18.38	12.71	0.08
308	SLE FR 1	275	20	4419	-16.16	11.31	0.07

Nodo	Cont.	Reazione a traslazione			Reazione a rotazione		
Ind.	N.br.	x	y	z	x	y	z
308	SLE FR 2	275	20	4417	-16.15	11.3	0.07
308	SLE FR 3	278	20	4442	-16.29	11.47	0.07
308	SLE FR 4	283	20	4588	-16.73	11.6	0.07
308	SLE FR 5	286	20	4613	-16.88	11.78	0.07
308	SLE FR 6	289	21	4704	-17.14	11.81	0.07
308	SLE QP 1	275	20	4419	-16.16	11.31	0.07
308	SLE QP 2	283	20	4590	-16.75	11.61	0.07
308	SLD 1	703	23	5015	-16.77	35.49	0.08
308	SLD 2	703	23	5015	-16.77	35.49	0.08
308	SLD 3	842	30	5304	-27.09	43.36	0.1
308	SLD 4	842	30	5304	-27.09	43.36	0.1
308	SLD 5	199	11	4278	-1.1	6.83	0.05
308	SLD 6	199	11	4278	-1.1	6.83	0.05
308	SLD 7	661	33	5243	-35.51	33.08	0.1
308	SLD 8	661	33	5243	-35.51	33.08	0.1
308	SLD 9	-95	7	3936	2.01	-9.86	0.03
308	SLD 10	-95	7	3936	2.01	-9.86	0.03
308	SLD 11	367	29	4901	-32.41	16.39	0.09
308	SLD 12	367	29	4901	-32.41	16.39	0.09
308	SLD 13	-276	11	3875	-6.41	-20.14	0.04
308	SLD 14	-276	11	3875	-6.41	-20.14	0.04
308	SLD 15	-137	17	4165	-16.74	-12.27	0.06
308	SLD 16	-137	17	4165	-16.74	-12.27	0.06
308	SLV 1	1262	27	5578	-16.03	67.19	0.1
308	SLV 2	1262	27	5578	-16.03	67.19	0.1
308	SLV 3	1595	43	6273	-41.76	86.11	0.14
308	SLV 4	1595	43	6273	-41.76	86.11	0.14
308	SLV 5	72	-2	3832	22.5	-0.41	0.02
308	SLV 6	72	-2	3832	22.5	-0.41	0.02
308	SLV 7	1181	51	6149	-63.29	62.66	0.15
308	SLV 8	1181	51	6149	-63.29	62.66	0.15
308	SLV 9	-615	-11	3030	29.79	-39.44	-0.01
308	SLV 10	-615	-11	3030	29.79	-39.44	-0.01
308	SLV 11	494	43	5348	-56.01	23.64	0.12
308	SLV 12	494	43	5348	-56.01	23.64	0.12
308	SLV 13	-1028	-2	2906	8.26	-62.89	0
308	SLV 14	-1028	-2	2906	8.26	-62.89	0
308	SLV 15	-696	14	3602	-17.48	-43.97	0.04
308	SLV 16	-696	14	3602	-17.48	-43.97	0.04
309	SLU 1	94	10	4703	-10.11	1.1	0.03
309	SLU 2	92	10	4695	-10.04	0.97	0.03
309	SLU 3	106	11	4843	-10.52	1.63	0.03
309	SLU 4	105	11	4838	-10.48	1.55	0.03
309	SLU 5	101	11	4791	-10.33	1.39	0.03
309	SLU 6	116	11	4940	-10.82	2.04	0.03
309	SLU 7	115	11	4935	-10.78	1.97	0.03
309	SLU 8	113	11	4895	-10.7	1.93	0.03
309	SLU 9	112	11	4891	-10.66	1.85	0.03
309	SLU 10	94	12	5360	-11.4	0.54	0.04
309	SLU 11	109	12	5508	-11.88	1.2	0.04
309	SLU 12	107	12	5503	-11.84	1.12	0.04
309	SLU 13	104	12	5456	-11.69	0.96	0.04
309	SLU 14	118	12	5604	-12.18	1.61	0.04
309	SLU 15	117	12	5599	-12.13	1.53	0.04
309	SLU 16	115	12	5560	-12.06	1.5	0.04
309	SLU 17	114	12	5555	-12.01	1.42	0.04
309	SLU 18	97	12	5653	-12.05	0.48	0.04
309	SLU 19	96	12	5648	-12.01	0.41	0.04
309	SLU 20	106	13	5749	-12.35	0.9	0.04
309	SLU 21	105	13	5744	-12.3	0.82	0.04
309	SLU 22	103	12	5345	-11.49	1.06	0.04
309	SLU 23	101	12	5337	-11.42	0.94	0.04
309	SLU 24	116	12	5485	-11.9	1.59	0.04
309	SLU 25	115	12	5481	-11.86	1.51	0.04
309	SLU 26	111	12	5433	-11.72	1.35	0.04
309	SLU 27	125	12	5582	-12.2	2.01	0.04
309	SLU 28	124	12	5577	-12.16	1.93	0.04
309	SLU 29	122	12	5537	-12.08	1.89	0.04
309	SLU 30	121	12	5533	-12.04	1.82	0.04
309	SLU 31	103	13	6002	-12.78	0.5	0.04
309	SLU 32	118	14	6150	-13.26	1.16	0.04
309	SLU 33	117	14	6145	-13.22	1.08	0.04
309	SLU 34	113	13	6098	-13.07	0.92	0.04
309	SLU 35	127	14	6246	-13.56	1.57	0.04
309	SLU 36	126	14	6241	-13.51	1.5	0.04
309	SLU 37	124	14	6202	-13.44	1.46	0.04
309	SLU 38	123	14	6197	-13.4	1.39	0.04
309	SLU 39	106	14	6295	-13.43	0.45	0.04
309	SLU 40	105	14	6290	-13.39	0.37	0.04
309	SLU 41	116	14	6391	-13.73	0.86	0.04
309	SLU 42	114	14	6386	-13.68	0.79	0.04
309	SLU 43	119	13	5894	-12.67	1.45	0.04
309	SLU 44	117	13	5886	-12.6	1.32	0.04
309	SLU 45	131	13	6034	-13.08	1.97	0.04
309	SLU 46	130	13	6029	-13.04	1.89	0.04
309	SLU 47	126	13	5982	-12.9	1.73	0.04
309	SLU 48	141	14	6130	-13.38	2.39	0.04
309	SLU 49	140	14	6125	-13.34	2.31	0.04
309	SLU 50	138	13	6086	-13.26	2.28	0.04
309	SLU 51	137	13	6081	-13.22	2.2	0.04

Nodo	Cont.	Reazione a traslazione			Reazione a rotazione		
Ind.	N.br.	x	y	z	x	y	z
309	SLU 52	119	14	6551	-13.96	0.88	0.05
309	SLU 53	133	15	6699	-14.44	1.54	0.05
309	SLU 54	132	15	6694	-14.4	1.46	0.05
309	SLU 55	128	15	6647	-14.25	1.3	0.05
309	SLU 56	143	15	6795	-14.74	1.95	0.05
309	SLU 57	142	15	6790	-14.69	1.88	0.05
309	SLU 58	140	15	6751	-14.62	1.84	0.05
309	SLU 59	139	15	6746	-14.58	1.77	0.05
309	SLU 60	122	15	6844	-14.61	0.83	0.05
309	SLU 61	121	15	6839	-14.57	0.75	0.05
309	SLU 62	131	15	6940	-14.91	1.24	0.05
309	SLU 63	130	15	6935	-14.86	1.17	0.05
309	SLU 64	128	14	6536	-14.05	1.41	0.05
309	SLU 65	126	14	6528	-13.98	1.28	0.05
309	SLU 66	141	15	6676	-14.47	1.93	0.05
309	SLU 67	140	15	6671	-14.42	1.86	0.05
309	SLU 68	136	15	6624	-14.28	1.69	0.05
309	SLU 69	150	15	6772	-14.76	2.35	0.05
309	SLU 70	149	15	6767	-14.72	2.27	0.05
309	SLU 71	147	15	6728	-14.64	2.24	0.05
309	SLU 72	146	15	6723	-14.6	2.16	0.05
309	SLU 73	128	16	7193	-15.34	0.85	0.05
309	SLU 74	143	16	7341	-15.82	1.5	0.05
309	SLU 75	142	16	7336	-15.78	1.42	0.05
309	SLU 76	138	16	7289	-15.63	1.26	0.05
309	SLU 77	152	16	7437	-16.12	1.92	0.05
309	SLU 78	151	16	7432	-16.07	1.84	0.05
309	SLU 79	149	16	7393	-16	1.81	0.05
309	SLU 80	148	16	7388	-15.96	1.73	0.05
309	SLU 81	131	16	7486	-15.99	0.79	0.05
309	SLU 82	130	16	7481	-15.95	0.71	0.05
309	SLU 83	141	17	7582	-16.29	1.21	0.05
309	SLU 84	139	17	7577	-16.24	1.13	0.05
309	SLE RA 1	96	11	4887	-10.51	1.09	0.03
309	SLE RA 2	95	11	4881	-10.46	1	0.03
309	SLE RA 3	105	11	4980	-10.78	1.44	0.03
309	SLE RA 4	104	11	4977	-10.75	1.39	0.03
309	SLE RA 5	102	11	4945	-10.66	1.28	0.03
309	SLE RA 6	111	11	5044	-10.98	1.72	0.04
309	SLE RA 7	110	11	5041	-10.95	1.67	0.04
309	SLE RA 8	109	11	5015	-10.9	1.64	0.04
309	SLE RA 9	108	11	5012	-10.87	1.59	0.03
309	SLE RA 10	97	12	5324	-11.36	0.72	0.04
309	SLE RA 11	106	12	5423	-11.69	1.15	0.04
309	SLE RA 12	106	12	5420	-11.66	1.1	0.04
309	SLE RA 13	103	12	5389	-11.56	0.99	0.04
309	SLE RA 14	113	12	5487	-11.88	1.43	0.04
309	SLE RA 15	112	12	5484	-11.85	1.38	0.04
309	SLE RA 16	110	12	5458	-11.8	1.36	0.04
309	SLE RA 17	110	12	5455	-11.78	1.31	0.04
309	SLE RA 18	98	12	5520	-11.8	0.68	0.04
309	SLE RA 19	98	12	5517	-11.77	0.63	0.04
309	SLE RA 20	105	12	5584	-12	0.96	0.04
309	SLE RA 21	104	12	5581	-11.97	0.9	0.04
309	SLE FR 1	96	11	4887	-10.51	1.09	0.03
309	SLE FR 2	96	11	4886	-10.5	1.07	0.03
309	SLE FR 3	99	11	4912	-10.59	1.2	0.03
309	SLE FR 4	97	11	5076	-10.89	0.95	0.04
309	SLE FR 5	100	11	5102	-10.97	1.08	0.04
309	SLE FR 6	97	11	5203	-11.15	0.89	0.04
309	SLE QP 1	96	11	4887	-10.51	1.09	0.03
309	SLE QP 2	97	11	5077	-10.89	0.97	0.04
309	SLD 1	498	13	4240	-11.23	22.15	0.04
309	SLD 2	498	13	4240	-11.23	22.15	0.04
309	SLD 3	635	16	4666	-17.32	29.78	0.05
309	SLD 4	635	16	4666	-17.32	29.78	0.05
309	SLD 5	11	7	4179	-1.75	-4.25	0.02
309	SLD 6	11	7	4179	-1.75	-4.25	0.02
309	SLD 7	465	17	5600	-22.07	21.18	0.06
309	SLD 8	465	17	5600	-22.07	21.18	0.06
309	SLD 9	-271	5	4554	0.28	-19.25	0.01
309	SLD 10	-271	5	4554	0.28	-19.25	0.01
309	SLD 11	183	15	5974	-20.04	6.18	0.05
309	SLD 12	183	15	5974	-20.04	6.18	0.05
309	SLD 13	-441	6	5488	-4.47	-27.84	0.02
309	SLD 14	-441	6	5488	-4.47	-27.84	0.02
309	SLD 15	-304	9	5914	-10.56	-20.21	0.03
309	SLD 16	-304	9	5914	-10.56	-20.21	0.03
309	SLV 1	1031	16	3088	-11.23	50.22	0.05
309	SLV 2	1031	16	3088	-11.23	50.22	0.05
309	SLV 3	1358	23	4132	-26.38	68.64	0.07
309	SLV 4	1358	23	4132	-26.38	68.64	0.07
309	SLV 5	-119	2	2896	11.99	-12.18	-0.01
309	SLV 6	-119	2	2896	11.99	-12.18	-0.01
309	SLV 7	971	25	6377	-38.53	49.2	0.09
309	SLV 8	971	25	6377	-38.53	49.2	0.09
309	SLV 9	-777	-3	3776	16.74	-47.26	-0.02
309	SLV 10	-777	-3	3776	16.74	-47.26	-0.02
309	SLV 11	313	20	7257	-33.78	14.12	0.08
309	SLV 12	313	20	7257	-33.78	14.12	0.08

Nodo	Cont.	Reazione a traslazione			Reazione a rotazione		
Ind.	N.br.	x	y	z	x	y	z
309	SLV 13	-1164	-1	6021	4.59	-66.7	0
309	SLV 14	-1164	-1	6021	4.59	-66.7	0
309	SLV 15	-837	6	7065	-10.56	-48.29	0.02
309	SLV 16	-837	6	7065	-10.56	-48.29	0.02
310	SLU 1	-196	14	5266	-5	-13.51	0.16
310	SLU 2	-198	14	5261	-4.97	-13.62	0.15
310	SLU 3	-194	15	5425	-5.19	-13.49	0.16
310	SLU 4	-195	15	5421	-5.17	-13.56	0.16
310	SLU 5	-195	15	5368	-5.1	-13.56	0.16
310	SLU 6	-191	15	5532	-5.32	-13.43	0.16
310	SLU 7	-192	15	5529	-5.31	-13.5	0.16
310	SLU 8	-191	15	5480	-5.27	-13.39	0.16
310	SLU 9	-192	15	5477	-5.25	-13.46	0.16
310	SLU 10	-237	17	6013	-5.66	-16.16	0.18
310	SLU 11	-233	17	6176	-5.88	-16.03	0.18
310	SLU 12	-234	17	6173	-5.86	-16.1	0.18
310	SLU 13	-234	17	6120	-5.79	-16.1	0.18
310	SLU 14	-230	17	6283	-6.01	-15.97	0.19
310	SLU 15	-231	17	6280	-5.99	-16.04	0.19
310	SLU 16	-230	17	6232	-5.96	-15.93	0.18
310	SLU 17	-231	17	6229	-5.94	-16	0.18
310	SLU 18	-252	17	6340	-5.98	-17.14	0.19
310	SLU 19	-253	17	6337	-5.97	-17.2	0.19
310	SLU 20	-249	18	6447	-6.12	-17.08	0.19
310	SLU 21	-250	18	6444	-6.1	-17.15	0.19
310	SLU 22	-227	16	5990	-5.69	-15.63	0.18
310	SLU 23	-229	16	5985	-5.65	-15.74	0.18
310	SLU 24	-225	17	6148	-5.88	-15.61	0.18
310	SLU 25	-226	17	6145	-5.86	-15.67	0.18
310	SLU 26	-227	17	6092	-5.79	-15.68	0.18
310	SLU 27	-223	17	6255	-6.01	-15.55	0.19
310	SLU 28	-224	17	6252	-5.99	-15.62	0.19
310	SLU 29	-223	17	6204	-5.95	-15.51	0.18
310	SLU 30	-224	17	6201	-5.93	-15.58	0.18
310	SLU 31	-268	19	6736	-6.34	-18.28	0.2
310	SLU 32	-264	19	6900	-6.57	-18.15	0.2
310	SLU 33	-265	19	6897	-6.55	-18.21	0.2
310	SLU 34	-266	19	6843	-6.48	-18.22	0.2
310	SLU 35	-262	19	7007	-6.7	-18.09	0.21
310	SLU 36	-263	19	7004	-6.68	-18.16	0.21
310	SLU 37	-262	19	6956	-6.64	-18.05	0.21
310	SLU 38	-263	19	6953	-6.62	-18.12	0.21
310	SLU 39	-283	19	7064	-6.67	-19.26	0.21
310	SLU 40	-284	19	7061	-6.65	-19.32	0.21
310	SLU 41	-281	20	7171	-6.8	-19.2	0.21
310	SLU 42	-282	20	7168	-6.78	-19.27	0.21
310	SLU 43	-244	18	6598	-6.27	-16.84	0.19
310	SLU 44	-246	18	6593	-6.23	-16.95	0.19
310	SLU 45	-242	18	6756	-6.46	-16.82	0.2
310	SLU 46	-243	18	6753	-6.44	-16.88	0.2
310	SLU 47	-243	18	6700	-6.37	-16.89	0.2
310	SLU 48	-239	19	6864	-6.59	-16.76	0.2
310	SLU 49	-240	19	6860	-6.57	-16.82	0.2
310	SLU 50	-239	19	6812	-6.53	-16.72	0.2
310	SLU 51	-240	19	6809	-6.51	-16.79	0.2
310	SLU 52	-285	20	7344	-6.92	-19.49	0.22
310	SLU 53	-281	21	7508	-7.15	-19.36	0.22
310	SLU 54	-282	21	7505	-7.13	-19.42	0.22
310	SLU 55	-282	20	7452	-7.06	-19.43	0.22
310	SLU 56	-278	21	7615	-7.28	-19.3	0.23
310	SLU 57	-279	21	7612	-7.26	-19.36	0.23
310	SLU 58	-278	21	7564	-7.22	-19.26	0.22
310	SLU 59	-279	21	7561	-7.2	-19.33	0.22
310	SLU 60	-300	21	7672	-7.25	-20.47	0.23
310	SLU 61	-301	21	7669	-7.23	-20.53	0.23
310	SLU 62	-297	21	7779	-7.38	-20.41	0.23
310	SLU 63	-298	21	7776	-7.36	-20.47	0.23
310	SLU 64	-275	20	7322	-6.95	-18.96	0.22
310	SLU 65	-277	20	7316	-6.92	-19.07	0.22
310	SLU 66	-273	20	7480	-7.14	-18.94	0.22
310	SLU 67	-274	21	7477	-7.12	-19	0.22
310	SLU 68	-275	20	7424	-7.05	-19.01	0.22
310	SLU 69	-271	21	7587	-7.28	-18.88	0.22
310	SLU 70	-272	21	7584	-7.26	-18.94	0.22
310	SLU 71	-271	21	7536	-7.22	-18.84	0.22
310	SLU 72	-272	21	7533	-7.2	-18.91	0.22
310	SLU 73	-316	22	8068	-7.61	-21.61	0.24
310	SLU 74	-312	23	8232	-7.83	-21.48	0.24
310	SLU 75	-313	23	8229	-7.81	-21.54	0.24
310	SLU 76	-314	22	8175	-7.74	-21.55	0.24
310	SLU 77	-310	23	8339	-7.96	-21.42	0.25
310	SLU 78	-311	23	8336	-7.95	-21.48	0.25
310	SLU 79	-310	23	8288	-7.91	-21.38	0.25
310	SLU 80	-311	23	8284	-7.89	-21.45	0.25
310	SLU 81	-331	23	8396	-7.94	-22.59	0.25
310	SLU 82	-332	23	8392	-7.92	-22.65	0.25
310	SLU 83	-329	23	8503	-8.07	-22.53	0.25
310	SLU 84	-330	23	8499	-8.05	-22.59	0.25
310	SLE RA 1	-205	15	5473	-5.2	-14.12	0.16
310	SLE RA 2	-206	15	5470	-5.17	-14.19	0.16

Nodo	Cont.	Reazione a traslazione			Reazione a rotazione		
Ind.	N.br.	x	y	z	x	y	z
310	SLE RA 3	-203	15	5579	-5.32	-14.1	0.16
310	SLE RA 4	-204	15	5577	-5.31	-14.15	0.16
310	SLE RA 5	-205	15	5541	-5.26	-14.15	0.16
310	SLE RA 6	-202	15	5650	-5.41	-14.06	0.17
310	SLE RA 7	-203	15	5648	-5.4	-14.11	0.17
310	SLE RA 8	-202	15	5616	-5.37	-14.04	0.17
310	SLE RA 9	-203	15	5614	-5.36	-14.08	0.17
310	SLE RA 10	-232	16	5971	-5.63	-15.88	0.18
310	SLE RA 11	-229	17	6080	-5.78	-15.8	0.18
310	SLE RA 12	-230	17	6078	-5.77	-15.84	0.18
310	SLE RA 13	-231	17	6042	-5.72	-15.84	0.18
310	SLE RA 14	-228	17	6151	-5.87	-15.76	0.18
310	SLE RA 15	-229	17	6149	-5.86	-15.8	0.18
310	SLE RA 16	-228	17	6117	-5.83	-15.73	0.18
310	SLE RA 17	-229	17	6115	-5.82	-15.78	0.18
310	SLE RA 18	-242	17	6189	-5.85	-16.54	0.18
310	SLE RA 19	-243	17	6187	-5.84	-16.58	0.18
310	SLE RA 20	-241	17	6260	-5.94	-16.5	0.18
310	SLE RA 21	-241	17	6258	-5.93	-16.54	0.18
310	SLE FR 1	-205	15	5473	-5.2	-14.12	0.16
310	SLE FR 2	-205	15	5472	-5.19	-14.13	0.16
310	SLE FR 3	-204	15	5502	-5.23	-14.1	0.16
310	SLE FR 4	-216	16	5687	-5.39	-14.86	0.17
310	SLE FR 5	-215	16	5716	-5.43	-14.83	0.17
310	SLE FR 6	-224	16	5831	-5.52	-15.33	0.17
310	SLE QP 1	-205	15	5473	-5.2	-14.12	0.16
310	SLE QP 2	-216	16	5688	-5.39	-14.84	0.17
310	SLD 1	125	22	5292	-8.6	4.29	0.22
310	SLD 2	125	22	5292	-8.6	4.29	0.22
310	SLD 3	256	18	4584	-5.63	11.51	0.19
310	SLD 4	256	18	4584	-5.63	11.51	0.19
310	SLD 5	-313	23	6643	-10.86	-20.07	0.24
310	SLD 6	-313	23	6643	-10.86	-20.07	0.24
310	SLD 7	124	11	4282	-0.96	4.03	0.12
310	SLD 8	124	11	4282	-0.96	4.03	0.12
310	SLD 9	-556	20	7093	-9.83	-33.71	0.22
310	SLD 10	-556	20	7093	-9.83	-33.71	0.22
310	SLD 11	-120	8	4733	0.07	-9.62	0.1
310	SLD 12	-120	8	4733	0.07	-9.62	0.1
310	SLD 13	-688	13	6792	-5.16	-41.2	0.15
310	SLD 14	-688	13	6792	-5.16	-41.2	0.15
310	SLD 15	-557	9	6084	-2.19	-33.97	0.11
310	SLD 16	-557	9	6084	-2.19	-33.97	0.11
310	SLV 1	577	30	4795	-13.09	29.65	0.3
310	SLV 2	577	30	4795	-13.09	29.65	0.3
310	SLV 3	891	22	3045	-5.75	47.06	0.21
310	SLV 4	891	22	3045	-5.75	47.06	0.21
310	SLV 5	-455	33	8074	-18.83	-27.9	0.34
310	SLV 6	-455	33	8074	-18.83	-27.9	0.34
310	SLV 7	593	4	2241	5.63	30.13	0.05
310	SLV 8	593	4	2241	5.63	30.13	0.05
310	SLV 9	-1025	27	9134	-16.41	-59.82	0.29
310	SLV 10	-1025	27	9134	-16.41	-59.82	0.29
310	SLV 11	23	-2	3302	8.04	-1.79	-0.01
310	SLV 12	23	-2	3302	8.04	-1.79	-0.01
310	SLV 13	-1323	10	8331	-5.04	-76.74	0.13
310	SLV 14	-1323	10	8331	-5.04	-76.74	0.13
310	SLV 15	-1009	1	6581	2.3	-59.33	0.04
310	SLV 16	-1009	1	6581	2.3	-59.33	0.04
312	SLU 1	-730	324	8696	563.87	213.83	-53.02
312	SLU 2	-730	321	8692	564.21	213.59	-52.81
312	SLU 3	-748	334	8962	581.67	220.68	-54.75
312	SLU 4	-748	332	8960	581.87	220.54	-54.62
312	SLU 5	-742	327	8871	576.27	218.23	-53.98
312	SLU 6	-760	341	9141	593.73	225.32	-55.91
312	SLU 7	-760	339	9139	593.93	225.18	-55.79
312	SLU 8	-753	337	9054	587.98	223.11	-55.35
312	SLU 9	-754	335	9052	588.19	222.96	-55.23
312	SLU 10	-841	369	9942	644.27	244.03	-60.48
312	SLU 11	-859	383	10212	661.73	251.12	-62.42
312	SLU 12	-859	381	10210	661.93	250.97	-62.29
312	SLU 13	-853	376	10121	656.33	248.67	-61.65
312	SLU 14	-871	389	10391	673.79	255.76	-63.59
312	SLU 15	-871	387	10389	673.99	255.61	-63.46
312	SLU 16	-864	386	10304	668.04	253.54	-63.02
312	SLU 17	-865	384	10302	668.25	253.4	-62.9
312	SLU 18	-888	393	10481	678.24	257.31	-63.98
312	SLU 19	-889	391	10479	678.44	257.17	-63.85
312	SLU 20	-900	400	10660	690.3	261.95	-65.15
312	SLU 21	-900	398	10658	690.5	261.81	-65.02
312	SLU 22	-833	368	9895	641.27	243.13	-60.32
312	SLU 23	-834	365	9891	641.61	242.89	-60.11
312	SLU 24	-851	379	10161	659.07	249.98	-62.05
312	SLU 25	-852	377	10159	659.28	249.84	-61.92
312	SLU 26	-846	372	10070	653.67	247.53	-61.28
312	SLU 27	-863	385	10340	671.13	254.62	-63.22
312	SLU 28	-864	384	10338	671.33	254.48	-63.09
312	SLU 29	-857	382	10253	665.39	252.41	-62.66
312	SLU 30	-857	380	10251	665.59	252.27	-62.53
312	SLU 31	-945	414	11141	721.67	273.33	-67.78

Nodo	Cont.	Reazione a traslazione			Reazione a rotazione		
Ind.	N.br.	x	y	z	x	y	z
312	SLU 32	-963	427	11411	739.13	280.42	-69.72
312	SLU 33	-963	425	11409	739.33	280.27	-69.6
312	SLU 34	-957	421	11320	733.73	277.97	-68.95
312	SLU 35	-974	434	11590	751.19	285.06	-70.89
312	SLU 36	-975	432	11588	751.39	284.91	-70.76
312	SLU 37	-968	431	11503	745.45	282.85	-70.33
312	SLU 38	-968	429	11500	745.65	282.7	-70.2
312	SLU 39	-992	438	11680	755.64	286.61	-71.28
312	SLU 40	-992	436	11678	755.85	286.47	-71.16
312	SLU 41	-1004	445	11859	767.7	291.25	-72.45
312	SLU 42	-1004	443	11857	767.9	291.11	-72.32
312	SLU 43	-913	406	10894	706.49	267.94	-66.42
312	SLU 44	-913	402	10890	706.83	267.69	-66.21
312	SLU 45	-931	416	11160	724.29	274.79	-68.15
312	SLU 46	-931	414	11158	724.5	274.64	-68.02
312	SLU 47	-925	409	11069	718.89	272.33	-67.38
312	SLU 48	-943	422	11339	736.35	279.42	-69.32
312	SLU 49	-943	421	11337	736.55	279.28	-69.19
312	SLU 50	-937	419	11252	730.61	277.21	-68.75
312	SLU 51	-937	417	11250	730.81	277.07	-68.63
312	SLU 52	-1025	451	12140	786.89	298.13	-73.88
312	SLU 53	-1042	464	12410	804.35	305.22	-75.82
312	SLU 54	-1043	463	12408	804.56	305.08	-75.7
312	SLU 55	-1036	458	12319	798.95	302.77	-75.05
312	SLU 56	-1054	471	12589	816.41	309.86	-76.99
312	SLU 57	-1054	469	12587	816.61	309.72	-76.86
312	SLU 58	-1048	468	12502	810.67	307.65	-76.43
312	SLU 59	-1048	466	12500	810.87	307.5	-76.3
312	SLU 60	-1072	475	12679	820.86	311.42	-77.38
312	SLU 61	-1072	473	12677	821.07	311.27	-77.25
312	SLU 62	-1084	482	12858	832.92	316.05	-78.55
312	SLU 63	-1084	480	12856	833.12	315.91	-78.42
312	SLU 64	-1017	450	12092	783.9	297.24	-73.72
312	SLU 65	-1017	447	12089	784.24	297	-73.51
312	SLU 66	-1035	460	12359	801.7	304.09	-75.45
312	SLU 67	-1035	459	12357	801.9	303.94	-75.33
312	SLU 68	-1029	454	12268	796.29	301.63	-74.68
312	SLU 69	-1047	467	12538	813.75	308.73	-76.62
312	SLU 70	-1047	465	12536	813.96	308.58	-76.49
312	SLU 71	-1040	464	12451	808.01	306.51	-76.06
312	SLU 72	-1041	462	12448	808.21	306.37	-75.93
312	SLU 73	-1128	496	13339	864.3	327.43	-81.19
312	SLU 74	-1146	509	13609	881.75	334.52	-83.12
312	SLU 75	-1146	507	13606	881.96	334.38	-83
312	SLU 76	-1140	503	13518	876.35	332.07	-82.35
312	SLU 77	-1158	516	13788	893.81	339.16	-84.29
312	SLU 78	-1158	514	13785	894.01	339.02	-84.17
312	SLU 79	-1151	512	13700	888.07	336.95	-83.73
312	SLU 80	-1152	511	13698	888.27	336.8	-83.6
312	SLU 81	-1175	520	13878	898.27	340.72	-84.68
312	SLU 82	-1176	518	13876	898.47	340.57	-84.56
312	SLU 83	-1187	526	14057	910.32	345.35	-85.85
312	SLU 84	-1187	525	14055	910.53	345.21	-85.72
312	SLE RA 1	-759	337	9038	585.99	222.2	-55.1
312	SLE RA 2	-760	334	9036	586.21	222.04	-54.97
312	SLE RA 3	-771	343	9216	597.85	226.77	-56.26
312	SLE RA 4	-772	342	9215	597.99	226.67	-56.17
312	SLE RA 5	-767	339	9155	594.25	225.14	-55.74
312	SLE RA 6	-779	348	9335	605.89	229.86	-57.04
312	SLE RA 7	-779	347	9334	606.03	229.77	-56.95
312	SLE RA 8	-775	345	9277	602.06	228.39	-56.66
312	SLE RA 9	-775	344	9276	602.2	228.29	-56.58
312	SLE RA 10	-834	367	9869	639.58	242.33	-60.08
312	SLE RA 11	-845	376	10049	651.22	247.06	-61.37
312	SLE RA 12	-846	375	10048	651.36	246.96	-61.29
312	SLE RA 13	-842	371	9989	647.62	245.43	-60.86
312	SLE RA 14	-853	380	10169	659.26	250.15	-62.15
312	SLE RA 15	-854	379	10167	659.4	250.06	-62.07
312	SLE RA 16	-849	378	10110	655.43	248.68	-61.78
312	SLE RA 17	-849	377	10109	655.57	248.58	-61.69
312	SLE RA 18	-865	383	10229	662.23	251.19	-62.41
312	SLE RA 19	-865	382	10227	662.37	251.09	-62.33
312	SLE RA 20	-873	387	10348	670.27	254.28	-63.19
312	SLE RA 21	-873	386	10347	670.41	254.19	-63.11
312	SLE FR 1	-759	337	9038	585.99	222.2	-55.1
312	SLE FR 2	-759	336	9038	586.03	222.17	-55.08
312	SLE FR 3	-762	338	9086	589.2	223.44	-55.42
312	SLE FR 4	-791	350	9395	608.91	230.87	-57.27
312	SLE FR 5	-794	352	9443	612.08	232.14	-57.61
312	SLE FR 6	-812	360	9634	624.11	236.7	-58.76
312	SLE QP 1	-759	337	9038	585.99	222.2	-55.1
312	SLE QP 2	-791	350	9396	608.86	230.9	-57.3
312	SLD 1	-623	721	7460	498	286.77	-84.57
312	SLD 2	-623	721	7460	498	286.77	-84.57
312	SLD 3	-478	427	8708	567.41	253.14	-64.66
312	SLD 4	-478	427	8708	567.41	253.14	-64.66
312	SLD 5	-959	907	6922	470.33	298.66	-95.66
312	SLD 6	-959	907	6922	470.33	298.66	-95.66
312	SLD 7	-479	-72	11082	701.7	186.57	-29.32
312	SLD 8	-479	-72	11082	701.7	186.57	-29.32

Nodo	Cont.	Reazione a traslazione			Reazione a rotazione		
Ind.	N.br.	x	y	z	x	y	z
312	SLD 9	-1103	773	7709	516.02	275.23	-85.27
312	SLD 10	-1103	773	7709	516.02	275.23	-85.27
312	SLD 11	-623	-206	11869	747.39	163.14	-18.93
312	SLD 12	-623	-206	11869	747.39	163.14	-18.93
312	SLD 13	-1103	274	10083	650.31	208.66	-49.93
312	SLD 14	-1103	274	10083	650.31	208.66	-49.93
312	SLD 15	-959	-20	11332	719.72	175.03	-30.03
312	SLD 16	-959	-20	11332	719.72	175.03	-30.03
312	SLV 1	-404	1226	4762	345.71	363.76	-121.95
312	SLV 2	-404	1226	4762	345.71	363.76	-121.95
312	SLV 3	-49	520	7844	513.17	281.19	-73.62
312	SLV 4	-49	520	7844	513.17	281.19	-73.62
312	SLV 5	-1213	1684	3332	275.94	395.99	-150
312	SLV 6	-1213	1684	3332	275.94	395.99	-150
312	SLV 7	-30	-669	13603	834.13	120.75	11.11
312	SLV 8	-30	-669	13603	834.13	120.75	11.11
312	SLV 9	-1552	1370	5188	383.59	341.05	-125.7
312	SLV 10	-1552	1370	5188	383.59	341.05	-125.7
312	SLV 11	-369	-983	15459	941.78	65.8	35.4
312	SLV 12	-369	-983	15459	941.78	65.8	35.4
312	SLV 13	-1533	181	10948	704.55	180.61	-40.97
312	SLV 14	-1533	181	10948	704.55	180.61	-40.97
312	SLV 15	-1178	-525	14029	872.01	98.04	7.36
312	SLV 16	-1178	-525	14029	872.01	98.04	7.36
313	SLU 1	528	10	2236	-12.58	15.21	1.98
313	SLU 2	531	10	2251	-12.5	15.29	1.96
313	SLU 3	520	10	2225	-13.04	14.85	2.05
313	SLU 4	522	10	2234	-12.98	14.9	2.04
313	SLU 5	517	10	2212	-12.78	14.72	2.01
313	SLU 6	505	10	2186	-13.33	14.27	2.09
313	SLU 7	507	10	2195	-13.27	14.32	2.09
313	SLU 8	499	10	2159	-13.16	14.07	2.07
313	SLU 9	501	10	2168	-13.11	14.12	2.06
313	SLU 10	615	11	2588	-14.21	17.84	2.23
313	SLU 11	604	12	2562	-14.75	17.4	2.32
313	SLU 12	606	11	2571	-14.69	17.44	2.31
313	SLU 13	600	11	2550	-14.49	17.27	2.28
313	SLU 14	589	12	2524	-15.04	16.82	2.36
313	SLU 15	591	12	2532	-14.98	16.87	2.36
313	SLU 16	583	12	2497	-14.87	16.61	2.34
313	SLU 17	585	12	2505	-14.82	16.66	2.33
313	SLU 18	648	12	2719	-15.03	18.85	2.36
313	SLU 19	650	12	2727	-14.97	18.9	2.35
313	SLU 20	633	12	2680	-15.31	18.28	2.41
313	SLU 21	635	12	2688	-15.26	18.33	2.4
313	SLU 22	594	11	2514	-14.31	17.15	2.25
313	SLU 23	597	11	2528	-14.22	17.23	2.24
313	SLU 24	586	12	2502	-14.76	16.78	2.32
313	SLU 25	587	11	2511	-14.71	16.83	2.31
313	SLU 26	582	11	2489	-14.51	16.66	2.28
313	SLU 27	571	12	2464	-15.05	16.21	2.37
313	SLU 28	573	12	2472	-15	16.26	2.36
313	SLU 29	564	12	2437	-14.89	16	2.34
313	SLU 30	566	12	2445	-14.83	16.05	2.33
313	SLU 31	680	12	2865	-15.93	19.78	2.51
313	SLU 32	669	13	2840	-16.47	19.33	2.59
313	SLU 33	671	13	2848	-16.42	19.38	2.58
313	SLU 34	666	13	2827	-16.22	19.2	2.55
313	SLU 35	655	13	2801	-16.76	18.76	2.64
313	SLU 36	656	13	2810	-16.71	18.81	2.63
313	SLU 37	648	13	2774	-16.59	18.55	2.61
313	SLU 38	650	13	2783	-16.54	18.6	2.6
313	SLU 39	713	13	2996	-16.75	20.79	2.64
313	SLU 40	715	13	3004	-16.7	20.84	2.63
313	SLU 41	698	14	2957	-17.04	20.21	2.68
313	SLU 42	700	13	2966	-16.99	20.26	2.67
313	SLU 43	664	12	2812	-15.77	19.11	2.48
313	SLU 44	667	12	2827	-15.68	19.19	2.46
313	SLU 45	656	13	2801	-16.22	18.75	2.55
313	SLU 46	658	12	2809	-16.17	18.8	2.54
313	SLU 47	653	12	2788	-15.97	18.62	2.51
313	SLU 48	642	13	2762	-16.51	18.17	2.59
313	SLU 49	643	13	2771	-16.46	18.22	2.59
313	SLU 50	635	13	2735	-16.34	17.97	2.57
313	SLU 51	637	13	2744	-16.29	18.02	2.56
313	SLU 52	751	13	3164	-17.39	21.74	2.73
313	SLU 53	740	14	3138	-17.93	21.29	2.82
313	SLU 54	742	14	3147	-17.88	21.34	2.81
313	SLU 55	736	14	3125	-17.68	21.17	2.78
313	SLU 56	725	14	3100	-18.22	20.72	2.86
313	SLU 57	727	14	3108	-18.17	20.77	2.86
313	SLU 58	719	14	3073	-18.05	20.51	2.84
313	SLU 59	721	14	3081	-18	20.56	2.83
313	SLU 60	784	14	3294	-18.21	22.75	2.86
313	SLU 61	786	14	3303	-18.16	22.8	2.85
313	SLU 62	769	15	3256	-18.5	22.18	2.91
313	SLU 63	771	14	3264	-18.44	22.23	2.9
313	SLU 64	730	14	3090	-17.49	21.05	2.75
313	SLU 65	733	13	3104	-17.4	21.13	2.74
313	SLU 66	722	14	3078	-17.95	20.68	2.82

Nodo	Cont.	Reazione a traslazione			Reazione a rotazione		
Ind.	N.br.	x	y	z	x	y	z
313	SLU 67	724	14	3087	-17.89	20.73	2.81
313	SLU 68	718	14	3065	-17.69	20.56	2.78
313	SLU 69	707	14	3040	-18.23	20.11	2.87
313	SLU 70	709	14	3048	-18.18	20.16	2.86
313	SLU 71	700	14	3012	-18.07	19.9	2.84
313	SLU 72	702	14	3021	-18.02	19.95	2.83
313	SLU 73	816	15	3441	-19.11	23.68	3.01
313	SLU 74	805	15	3416	-19.66	23.23	3.09
313	SLU 75	807	15	3424	-19.6	23.28	3.08
313	SLU 76	802	15	3403	-19.4	23.1	3.05
313	SLU 77	791	16	3377	-19.94	22.66	3.14
313	SLU 78	792	16	3386	-19.89	22.71	3.13
313	SLU 79	784	16	3350	-19.78	22.45	3.11
313	SLU 80	786	16	3358	-19.73	22.5	3.1
313	SLU 81	849	16	3572	-19.94	24.69	3.14
313	SLU 82	851	16	3580	-19.88	24.74	3.13
313	SLU 83	834	16	3533	-20.22	24.11	3.18
313	SLU 84	836	16	3542	-20.17	24.16	3.17
313	SLE RA 1	547	10	2316	-13.08	15.76	2.06
313	SLE RA 2	549	10	2325	-13.02	15.82	2.05
313	SLE RA 3	541	10	2308	-13.38	15.52	2.1
313	SLE RA 4	543	10	2314	-13.34	15.55	2.1
313	SLE RA 5	539	10	2300	-13.21	15.44	2.08
313	SLE RA 6	532	11	2282	-13.57	15.14	2.13
313	SLE RA 7	533	11	2288	-13.54	15.17	2.13
313	SLE RA 8	527	11	2264	-13.46	15	2.12
313	SLE RA 9	529	10	2270	-13.43	15.03	2.11
313	SLE RA 10	605	11	2550	-14.16	17.52	2.23
313	SLE RA 11	597	11	2533	-14.52	17.22	2.28
313	SLE RA 12	599	11	2539	-14.48	17.25	2.28
313	SLE RA 13	595	11	2524	-14.35	17.14	2.26
313	SLE RA 14	587	12	2507	-14.71	16.84	2.31
313	SLE RA 15	589	12	2513	-14.68	16.87	2.31
313	SLE RA 16	583	11	2489	-14.6	16.7	2.3
313	SLE RA 17	584	11	2495	-14.56	16.73	2.29
313	SLE RA 18	626	12	2637	-14.7	18.19	2.31
313	SLE RA 19	628	11	2643	-14.67	18.22	2.31
313	SLE RA 20	617	12	2611	-14.9	17.81	2.34
313	SLE RA 21	618	12	2617	-14.86	17.84	2.34
313	SLE FR 1	547	10	2316	-13.08	15.76	2.06
313	SLE FR 2	547	10	2318	-13.06	15.77	2.05
313	SLE FR 3	543	10	2305	-13.15	15.61	2.07
313	SLE FR 4	571	11	2414	-13.55	16.5	2.13
313	SLE FR 5	567	11	2402	-13.64	16.34	2.14
313	SLE FR 6	587	11	2476	-13.89	16.98	2.18
313	SLE QP 1	547	10	2316	-13.08	15.76	2.06
313	SLE QP 2	571	11	2412	-13.56	16.49	2.13
313	SLD 1	1023	2	3301	-6.68	33.48	0.97
313	SLD 2	1023	2	3301	-6.68	33.48	0.97
313	SLD 3	876	37	3839	-13.06	28.04	2.13
313	SLD 4	876	37	3839	-13.06	28.04	2.13
313	SLD 5	930	-45	1862	-1.81	29.84	0.02
313	SLD 6	930	-45	1862	-1.81	29.84	0.02
313	SLD 7	439	71	3657	-23.1	11.71	3.89
313	SLD 8	439	71	3657	-23.1	11.71	3.89
313	SLD 9	702	-50	1167	-4.03	21.28	0.37
313	SLD 10	702	-50	1167	-4.03	21.28	0.37
313	SLD 11	212	66	2963	-25.32	3.15	4.25
313	SLD 12	212	66	2963	-25.32	3.15	4.25
313	SLD 13	265	-16	985	-14.07	4.95	2.14
313	SLD 14	265	-16	985	-14.07	4.95	2.14
313	SLD 15	118	19	1524	-20.45	-0.49	3.3
313	SLD 16	118	19	1524	-20.45	-0.49	3.3
313	SLV 1	1637	-11	4469	2.71	56.54	-0.65
313	SLV 2	1637	-11	4469	2.71	56.54	-0.65
313	SLV 3	1280	77	5781	-12.47	43.31	2.15
313	SLV 4	1280	77	5781	-12.47	43.31	2.15
313	SLV 5	1432	-128	1039	14.34	48.57	-2.94
313	SLV 6	1432	-128	1039	14.34	48.57	-2.94
313	SLV 7	243	163	5413	-36.25	4.47	6.38
313	SLV 8	243	163	5413	-36.25	4.47	6.38
313	SLV 9	899	-142	-589	9.13	28.51	-2.11
313	SLV 10	899	-142	-589	9.13	28.51	-2.11
313	SLV 11	-290	150	3785	-41.46	-15.59	7.21
313	SLV 12	-290	150	3785	-41.46	-15.59	7.21
313	SLV 13	-139	-55	-957	-14.66	-10.33	2.11
313	SLV 14	-139	-55	-957	-14.66	-10.33	2.11
313	SLV 15	-495	32	355	-29.84	-23.55	4.91
313	SLV 16	-495	32	355	-29.84	-23.55	4.91
314	SLU 1	111	35	3938	-25.99	2.3	-0.07
314	SLU 2	112	35	3955	-25.84	2.46	-0.07
314	SLU 3	93	36	3953	-26.92	1.1	-0.07
314	SLU 4	94	36	3963	-26.83	1.2	-0.07
314	SLU 5	93	36	3926	-26.42	1.25	-0.07
314	SLU 6	73	37	3923	-27.51	-0.11	-0.07
314	SLU 7	74	37	3934	-27.41	-0.01	-0.07
314	SLU 8	72	37	3879	-27.16	-0.13	-0.07
314	SLU 9	73	37	3889	-27.06	-0.03	-0.07
314	SLU 10	136	40	4530	-29.33	3.2	-0.07
314	SLU 11	116	41	4528	-30.42	1.84	-0.08

Nodo	Cont.	Reazione a traslazione			Reazione a rotazione		
Ind.	N.br.	x	y	z	x	y	z
314	SLU 12	117	41	4538	-30.32	1.94	-0.08
314	SLU 13	117	40	4501	-29.91	1.99	-0.08
314	SLU 14	97	42	4498	-31	0.63	-0.08
314	SLU 15	98	42	4509	-30.9	0.73	-0.08
314	SLU 16	96	41	4454	-30.65	0.61	-0.08
314	SLU 17	97	41	4464	-30.55	0.71	-0.08
314	SLU 18	145	42	4759	-30.98	3.35	-0.08
314	SLU 19	146	42	4769	-30.89	3.45	-0.08
314	SLU 20	126	43	4729	-31.56	2.14	-0.08
314	SLU 21	127	43	4740	-31.47	2.24	-0.08
314	SLU 22	120	40	4427	-29.53	2.22	-0.07
314	SLU 23	121	40	4445	-29.37	2.38	-0.07
314	SLU 24	101	41	4442	-30.46	1.02	-0.08
314	SLU 25	102	41	4453	-30.36	1.12	-0.08
314	SLU 26	102	40	4415	-29.95	1.17	-0.08
314	SLU 27	82	42	4413	-31.04	-0.19	-0.08
314	SLU 28	83	42	4423	-30.95	-0.09	-0.08
314	SLU 29	81	41	4368	-30.69	-0.21	-0.08
314	SLU 30	82	41	4379	-30.6	-0.11	-0.08
314	SLU 31	145	44	5019	-32.86	3.12	-0.08
314	SLU 32	125	46	5017	-33.95	1.76	-0.09
314	SLU 33	126	46	5028	-33.86	1.86	-0.09
314	SLU 34	126	45	4990	-33.44	1.91	-0.08
314	SLU 35	106	47	4988	-34.53	0.55	-0.09
314	SLU 36	107	47	4998	-34.44	0.65	-0.09
314	SLU 37	105	46	4943	-34.18	0.53	-0.09
314	SLU 38	106	46	4953	-34.09	0.63	-0.09
314	SLU 39	154	47	5248	-34.52	3.27	-0.09
314	SLU 40	155	47	5259	-34.42	3.37	-0.09
314	SLU 41	134	47	5219	-35.1	2.06	-0.09
314	SLU 42	135	47	5229	-35	2.16	-0.09
314	SLU 43	141	44	4951	-32.58	3.02	-0.08
314	SLU 44	143	44	4969	-32.42	3.18	-0.08
314	SLU 45	123	45	4966	-33.51	1.82	-0.08
314	SLU 46	124	45	4977	-33.42	1.92	-0.08
314	SLU 47	123	45	4939	-33	1.97	-0.08
314	SLU 48	104	46	4937	-34.09	0.61	-0.09
314	SLU 49	104	46	4947	-34	0.71	-0.09
314	SLU 50	102	46	4892	-33.74	0.59	-0.09
314	SLU 51	103	45	4903	-33.65	0.69	-0.09
314	SLU 52	167	49	5544	-35.91	3.92	-0.09
314	SLU 53	147	50	5541	-37	2.56	-0.09
314	SLU 54	148	50	5552	-36.91	2.66	-0.09
314	SLU 55	147	49	5514	-36.5	2.71	-0.09
314	SLU 56	127	51	5512	-37.58	1.35	-0.1
314	SLU 57	128	51	5522	-37.49	1.45	-0.1
314	SLU 58	126	50	5467	-37.23	1.33	-0.09
314	SLU 59	127	50	5478	-37.14	1.43	-0.09
314	SLU 60	175	51	5772	-37.57	4.07	-0.09
314	SLU 61	176	51	5783	-37.47	4.17	-0.09
314	SLU 62	156	52	5743	-38.15	2.85	-0.1
314	SLU 63	157	51	5753	-38.06	2.95	-0.1
314	SLU 64	150	49	5441	-36.11	2.93	-0.09
314	SLU 65	152	49	5458	-35.96	3.1	-0.09
314	SLU 66	132	50	5456	-37.04	1.74	-0.09
314	SLU 67	133	50	5466	-36.95	1.84	-0.09
314	SLU 68	132	49	5429	-36.54	1.89	-0.09
314	SLU 69	112	51	5426	-37.63	0.53	-0.1
314	SLU 70	113	51	5437	-37.53	0.63	-0.1
314	SLU 71	111	50	5382	-37.28	0.51	-0.09
314	SLU 72	112	50	5392	-37.18	0.61	-0.09
314	SLU 73	175	53	6033	-39.45	3.84	-0.1
314	SLU 74	155	55	6031	-40.54	2.48	-0.1
314	SLU 75	156	55	6041	-40.44	2.58	-0.1
314	SLU 76	156	54	6004	-40.03	2.62	-0.1
314	SLU 77	136	56	6001	-41.12	1.26	-0.1
314	SLU 78	137	55	6012	-41.02	1.36	-0.1
314	SLU 79	135	55	5956	-40.77	1.24	-0.1
314	SLU 80	136	55	5967	-40.67	1.34	-0.1
314	SLU 81	184	56	6262	-41.1	3.99	-0.1
314	SLU 82	185	55	6272	-41.01	4.09	-0.1
314	SLU 83	165	56	6232	-41.68	2.77	-0.11
314	SLU 84	166	56	6243	-41.59	2.87	-0.11
314	SLE RA 1	113	36	4078	-27	2.27	-0.07
314	SLE RA 2	114	36	4089	-26.9	2.39	-0.07
314	SLE RA 3	101	37	4088	-27.62	1.48	-0.07
314	SLE RA 4	102	37	4095	-27.56	1.55	-0.07
314	SLE RA 5	102	37	4070	-27.29	1.58	-0.07
314	SLE RA 6	88	38	4068	-28.01	0.67	-0.07
314	SLE RA 7	89	38	4075	-27.95	0.74	-0.07
314	SLE RA 8	88	38	4038	-27.78	0.66	-0.07
314	SLE RA 9	88	37	4045	-27.72	0.72	-0.07
314	SLE RA 10	130	40	4472	-29.23	2.88	-0.07
314	SLE RA 11	117	40	4471	-29.95	1.97	-0.08
314	SLE RA 12	118	40	4478	-29.89	2.04	-0.08
314	SLE RA 13	117	40	4453	-29.61	2.07	-0.08
314	SLE RA 14	104	41	4451	-30.34	1.16	-0.08
314	SLE RA 15	105	41	4458	-30.28	1.23	-0.08
314	SLE RA 16	104	41	4421	-30.11	1.15	-0.08
314	SLE RA 17	104	41	4428	-30.04	1.21	-0.08

Nodo	Cont.	Reazione a traslazione			Reazione a rotazione		
Ind.	N.br.	x	y	z	x	y	z
314	SLE RA 18	136	41	4625	-30.33	2.98	-0.08
314	SLE RA 19	137	41	4632	-30.27	3.04	-0.08
314	SLE RA 20	123	42	4605	-30.72	2.17	-0.08
314	SLE RA 21	124	41	4612	-30.65	2.23	-0.08
314	SLE FR 1	113	36	4078	-27	2.27	-0.07
314	SLE FR 2	114	36	4080	-26.98	2.3	-0.07
314	SLE FR 3	108	37	4070	-27.16	1.95	-0.07
314	SLE FR 4	121	38	4244	-27.98	2.51	-0.07
314	SLE FR 5	115	38	4234	-28.16	2.16	-0.07
314	SLE FR 6	125	39	4351	-28.67	2.63	-0.07
314	SLE QP 1	113	36	4078	-27	2.27	-0.07
314	SLE QP 2	120	38	4242	-28	2.48	-0.07
314	SLD 1	556	19	5217	-14.23	27.73	-0.04
314	SLD 2	556	19	5217	-14.23	27.73	-0.04
314	SLD 3	436	35	5952	-25.74	21.03	-0.06
314	SLD 4	436	35	5952	-25.74	21.03	-0.06
314	SLD 5	434	8	3420	-6.42	20.22	-0.02
314	SLD 6	434	8	3420	-6.42	20.22	-0.02
314	SLD 7	32	61	5869	-44.77	-2.11	-0.11
314	SLD 8	32	61	5869	-44.77	-2.11	-0.11
314	SLD 9	208	15	2615	-11.23	7.08	-0.03
314	SLD 10	208	15	2615	-11.23	7.08	-0.03
314	SLD 11	-193	67	5063	-49.58	-15.25	-0.12
314	SLD 12	-193	67	5063	-49.58	-15.25	-0.12
314	SLD 13	-195	41	2532	-30.26	-16.06	-0.08
314	SLD 14	-195	41	2532	-30.26	-16.06	-0.08
314	SLD 15	-316	57	3266	-41.77	-22.76	-0.1
314	SLD 16	-316	57	3266	-41.77	-22.76	-0.1
314	SLV 1	1145	-6	6500	4.47	61.74	0.01
314	SLV 2	1145	-6	6500	4.47	61.74	0.01
314	SLV 3	855	31	8282	-22.9	45.65	-0.05
314	SLV 4	855	31	8282	-22.9	45.65	-0.05
314	SLV 5	868	-32	2216	23.25	44.68	0.05
314	SLV 6	868	-32	2216	23.25	44.68	0.05
314	SLV 7	-100	92	8157	-67.98	-8.98	-0.16
314	SLV 8	-100	92	8157	-67.98	-8.98	-0.16
314	SLV 9	341	-16	327	11.98	13.95	0.02
314	SLV 10	341	-16	327	11.98	13.95	0.02
314	SLV 11	-628	107	6267	-79.25	-39.71	-0.19
314	SLV 12	-628	107	6267	-79.25	-39.71	-0.19
314	SLV 13	-614	45	202	-33.1	-40.68	-0.09
314	SLV 14	-614	45	202	-33.1	-40.68	-0.09
314	SLV 15	-904	82	1984	-60.47	-56.77	-0.15
314	SLV 16	-904	82	1984	-60.47	-56.77	-0.15
315	SLU 1	-74	28	3705	-25.03	2.44	0.05
315	SLU 2	-73	28	3713	-24.9	2.48	0.05
315	SLU 3	-100	29	3746	-25.92	1.2	0.05
315	SLU 4	-100	29	3751	-25.85	1.23	0.05
315	SLU 5	-100	28	3716	-25.45	1.15	0.05
315	SLU 6	-126	29	3750	-26.48	-0.13	0.05
315	SLU 7	-126	29	3754	-26.4	-0.1	0.05
315	SLU 8	-126	29	3712	-26.14	-0.22	0.05
315	SLU 9	-126	29	3716	-26.06	-0.2	0.05
315	SLU 10	-74	31	4240	-28.21	3.46	0.06
315	SLU 11	-101	32	4274	-29.24	2.17	0.06
315	SLU 12	-100	32	4278	-29.16	2.2	0.06
315	SLU 13	-100	32	4244	-28.77	2.13	0.06
315	SLU 14	-127	33	4277	-29.79	0.84	0.06
315	SLU 15	-127	33	4282	-29.71	0.87	0.06
315	SLU 16	-126	33	4240	-29.45	0.75	0.06
315	SLU 17	-126	33	4244	-29.37	0.78	0.06
315	SLU 18	-74	33	4459	-29.76	3.83	0.06
315	SLU 19	-74	33	4464	-29.68	3.86	0.06
315	SLU 20	-100	34	4463	-30.31	2.5	0.06
315	SLU 21	-100	34	4467	-30.24	2.53	0.06
315	SLU 22	-89	32	4165	-28.4	2.57	0.06
315	SLU 23	-89	31	4173	-28.27	2.62	0.06
315	SLU 24	-116	33	4207	-29.29	1.33	0.06
315	SLU 25	-116	32	4211	-29.21	1.36	0.06
315	SLU 26	-115	32	4176	-28.82	1.29	0.06
315	SLU 27	-142	33	4210	-29.84	0	0.06
315	SLU 28	-142	33	4214	-29.76	0.03	0.06
315	SLU 29	-142	33	4172	-29.5	-0.09	0.06
315	SLU 30	-141	33	4177	-29.42	-0.06	0.06
315	SLU 31	-89	35	4700	-31.58	3.59	0.06
315	SLU 32	-116	36	4734	-32.6	2.31	0.06
315	SLU 33	-116	36	4739	-32.52	2.34	0.06
315	SLU 34	-115	36	4704	-32.13	2.26	0.06
315	SLU 35	-142	37	4738	-33.15	0.98	0.06
315	SLU 36	-142	37	4742	-33.07	1.01	0.06
315	SLU 37	-142	36	4700	-32.81	0.88	0.06
315	SLU 38	-142	36	4704	-32.73	0.91	0.06
315	SLU 39	-90	37	4919	-33.13	3.96	0.06
315	SLU 40	-90	37	4924	-33.05	3.99	0.06
315	SLU 41	-116	37	4923	-33.68	2.63	0.07
315	SLU 42	-116	37	4927	-33.6	2.66	0.07
315	SLU 43	-91	35	4659	-31.39	3.12	0.06
315	SLU 44	-90	35	4666	-31.26	3.17	0.06
315	SLU 45	-117	36	4700	-32.28	1.88	0.06
315	SLU 46	-117	36	4705	-32.2	1.91	0.06

Nodo	Cont.	Reazione a traslazione			Reazione a rotazione		
Ind.	N.br.	x	y	z	x	y	z
315	SLU 47	-116	35	4670	-31.81	1.84	0.06
315	SLU 48	-143	36	4704	-32.83	0.55	0.06
315	SLU 49	-143	36	4708	-32.75	0.58	0.06
315	SLU 50	-143	36	4666	-32.49	0.46	0.06
315	SLU 51	-143	36	4670	-32.41	0.49	0.06
315	SLU 52	-91	38	5194	-34.57	4.14	0.07
315	SLU 53	-117	40	5228	-35.59	2.86	0.07
315	SLU 54	-117	39	5232	-35.51	2.89	0.07
315	SLU 55	-117	39	5197	-35.12	2.81	0.07
315	SLU 56	-144	40	5231	-36.14	1.53	0.07
315	SLU 57	-143	40	5236	-36.07	1.56	0.07
315	SLU 58	-143	40	5194	-35.8	1.44	0.07
315	SLU 59	-143	40	5198	-35.72	1.46	0.07
315	SLU 60	-91	40	5413	-36.12	4.51	0.07
315	SLU 61	-91	40	5417	-36.04	4.54	0.07
315	SLU 62	-117	41	5416	-36.67	3.18	0.07
315	SLU 63	-117	41	5421	-36.59	3.21	0.07
315	SLU 64	-106	39	5119	-34.75	3.25	0.07
315	SLU 65	-106	38	5127	-34.62	3.3	0.07
315	SLU 66	-133	40	5160	-35.65	2.02	0.07
315	SLU 67	-132	40	5165	-35.57	2.05	0.07
315	SLU 68	-132	39	5130	-35.18	1.97	0.07
315	SLU 69	-159	40	5164	-36.2	0.69	0.07
315	SLU 70	-159	40	5168	-36.12	0.72	0.07
315	SLU 71	-158	40	5126	-35.86	0.6	0.07
315	SLU 72	-158	40	5130	-35.78	0.62	0.07
315	SLU 73	-106	42	5654	-37.93	4.28	0.07
315	SLU 74	-133	43	5688	-38.96	2.99	0.08
315	SLU 75	-133	43	5692	-38.88	3.02	0.08
315	SLU 76	-132	43	5658	-38.49	2.95	0.08
315	SLU 77	-159	44	5691	-39.51	1.66	0.08
315	SLU 78	-159	44	5696	-39.43	1.69	0.08
315	SLU 79	-159	43	5654	-39.17	1.57	0.08
315	SLU 80	-159	43	5658	-39.09	1.6	0.08
315	SLU 81	-107	44	5873	-39.48	4.65	0.08
315	SLU 82	-106	44	5877	-39.41	4.67	0.08
315	SLU 83	-133	44	5877	-40.03	3.32	0.08
315	SLU 84	-133	44	5881	-39.96	3.34	0.08
315	SLE RA 1	-78	29	3837	-25.99	2.47	0.05
315	SLE RA 2	-78	29	3842	-25.91	2.51	0.05
315	SLE RA 3	-96	30	3864	-26.59	1.65	0.05
315	SLE RA 4	-96	29	3867	-26.54	1.67	0.05
315	SLE RA 5	-95	29	3844	-26.28	1.62	0.05
315	SLE RA 6	-113	30	3866	-26.96	0.76	0.05
315	SLE RA 7	-113	30	3869	-26.9	0.78	0.05
315	SLE RA 8	-113	30	3841	-26.73	0.7	0.05
315	SLE RA 9	-113	30	3844	-26.68	0.72	0.05
315	SLE RA 10	-78	31	4193	-28.11	3.15	0.06
315	SLE RA 11	-96	32	4216	-28.8	2.3	0.06
315	SLE RA 12	-96	32	4219	-28.74	2.32	0.06
315	SLE RA 13	-96	32	4196	-28.48	2.27	0.06
315	SLE RA 14	-114	32	4218	-29.16	1.41	0.06
315	SLE RA 15	-113	32	4221	-29.11	1.43	0.06
315	SLE RA 16	-113	32	4193	-28.94	1.35	0.06
315	SLE RA 17	-113	32	4196	-28.88	1.37	0.06
315	SLE RA 18	-79	32	4339	-29.15	3.4	0.06
315	SLE RA 19	-78	32	4342	-29.09	3.42	0.06
315	SLE RA 20	-96	33	4342	-29.51	2.52	0.06
315	SLE RA 21	-96	33	4344	-29.46	2.53	0.06
315	SLE FR 1	-78	29	3837	-25.99	2.47	0.05
315	SLE FR 2	-78	29	3838	-25.98	2.48	0.05
315	SLE FR 3	-85	29	3838	-26.14	2.12	0.05
315	SLE FR 4	-78	30	3989	-26.92	2.76	0.05
315	SLE FR 5	-85	30	3988	-27.09	2.4	0.05
315	SLE FR 6	-78	31	4088	-27.57	2.94	0.05
315	SLE QP 1	-78	29	3837	-25.99	2.47	0.05
315	SLE QP 2	-78	30	3988	-26.94	2.75	0.05
315	SLD 1	484	11	4467	-9.82	33.74	0.05
315	SLD 2	484	11	4467	-9.82	33.74	0.05
315	SLD 3	325	29	4966	-26.36	24.61	0.08
315	SLD 4	325	29	4966	-26.36	24.61	0.08
315	SLD 5	331	-3	3374	3.28	25.89	0.02
315	SLD 6	331	-3	3374	3.28	25.89	0.02
315	SLD 7	-197	57	5038	-51.85	-4.53	0.1
315	SLD 8	-197	57	5038	-51.85	-4.53	0.1
315	SLD 9	41	3	2937	-2.03	10.04	0.01
315	SLD 10	41	3	2937	-2.03	10.04	0.01
315	SLD 11	-487	63	4601	-57.16	-20.39	0.09
315	SLD 12	-487	63	4601	-57.16	-20.39	0.09
315	SLD 13	-482	31	3009	-27.52	-19.11	0.03
315	SLD 14	-482	31	3009	-27.52	-19.11	0.03
315	SLD 15	-641	49	3508	-44.06	-28.23	0.05
315	SLD 16	-641	49	3508	-44.06	-28.23	0.05
315	SLV 1	1243	-16	5103	14.52	75.63	0.05
315	SLV 2	1243	-16	5103	14.52	75.63	0.05
315	SLV 3	862	29	6295	-26.64	53.64	0.11
315	SLV 4	862	29	6295	-26.64	53.64	0.11
315	SLV 5	897	-52	2514	47.92	57.97	-0.03
315	SLV 6	897	-52	2514	47.92	57.97	-0.03
315	SLV 7	-375	98	6488	-89.28	-15.34	0.16

Nodo	Cont.	Reazione a traslazione			Reazione a rotazione		
Ind.	N.br.	x	y	z	x	y	z
315	SLV 8	-375	98	6488	-89.28	-15.34	0.16
315	SLV 9	218	-38	1487	35.4	20.84	-0.05
315	SLV 10	218	-38	1487	35.4	20.84	-0.05
315	SLV 11	-1053	112	5461	-101.8	-52.47	0.14
315	SLV 12	-1053	112	5461	-101.8	-52.47	0.14
315	SLV 13	-1018	31	1680	-27.24	-48.13	-0.01
315	SLV 14	-1018	31	1680	-27.24	-48.13	-0.01
315	SLV 15	-1400	76	2872	-68.4	-70.13	0.05
315	SLV 16	-1400	76	2872	-68.4	-70.13	0.05
316	SLU 1	-327	26	3460	-23.89	-17.74	0.06
316	SLU 2	-327	26	3459	-23.78	-17.67	0.06
316	SLU 3	-362	27	3512	-24.75	-19.43	0.06
316	SLU 4	-362	27	3511	-24.68	-19.39	0.06
316	SLU 5	-359	27	3479	-24.31	-19.2	0.06
316	SLU 6	-393	28	3532	-25.28	-20.96	0.06
316	SLU 7	-393	28	3531	-25.21	-20.92	0.06
316	SLU 8	-390	28	3500	-24.96	-20.8	0.06
316	SLU 9	-390	28	3500	-24.89	-20.76	0.06
316	SLU 10	-368	30	3945	-26.88	-19.99	0.07
316	SLU 11	-403	31	3998	-27.86	-21.75	0.07
316	SLU 12	-403	31	3997	-27.79	-21.71	0.07
316	SLU 13	-400	30	3965	-27.41	-21.52	0.07
316	SLU 14	-434	31	4018	-28.39	-23.28	0.07
316	SLU 15	-434	31	4017	-28.32	-23.24	0.07
316	SLU 16	-431	31	3986	-28.06	-23.12	0.07
316	SLU 17	-431	31	3986	-27.99	-23.08	0.07
316	SLU 18	-386	31	4154	-28.33	-21.05	0.07
316	SLU 19	-386	31	4154	-28.26	-21.01	0.07
316	SLU 20	-417	32	4175	-28.86	-22.58	0.07
316	SLU 21	-417	32	4174	-28.79	-22.54	0.07
316	SLU 22	-380	30	3887	-27.07	-20.59	0.07
316	SLU 23	-380	30	3886	-26.95	-20.53	0.07
316	SLU 24	-415	31	3939	-27.92	-22.29	0.07
316	SLU 25	-415	31	3938	-27.85	-22.25	0.07
316	SLU 26	-412	30	3906	-27.48	-22.06	0.07
316	SLU 27	-446	31	3959	-28.45	-23.82	0.07
316	SLU 28	-446	31	3958	-28.38	-23.78	0.07
316	SLU 29	-443	31	3928	-28.13	-23.65	0.07
316	SLU 30	-443	31	3927	-28.06	-23.61	0.07
316	SLU 31	-421	33	4372	-30.06	-22.85	0.07
316	SLU 32	-456	34	4425	-31.03	-24.61	0.08
316	SLU 33	-455	34	4424	-30.96	-24.57	0.08
316	SLU 34	-453	34	4392	-30.59	-24.38	0.08
316	SLU 35	-487	35	4445	-31.56	-26.14	0.08
316	SLU 36	-487	35	4444	-31.49	-26.1	0.08
316	SLU 37	-484	35	4414	-31.23	-25.97	0.08
316	SLU 38	-484	34	4413	-31.16	-25.93	0.08
316	SLU 39	-439	35	4582	-31.5	-23.91	0.08
316	SLU 40	-439	35	4581	-31.43	-23.87	0.08
316	SLU 41	-470	35	4602	-32.03	-25.44	0.08
316	SLU 42	-470	35	4601	-31.96	-25.4	0.08
316	SLU 43	-407	33	4352	-29.98	-22.08	0.07
316	SLU 44	-407	33	4350	-29.86	-22.01	0.07
316	SLU 45	-442	34	4403	-30.83	-23.78	0.08
316	SLU 46	-442	34	4403	-30.76	-23.74	0.08
316	SLU 47	-439	34	4370	-30.39	-23.54	0.08
316	SLU 48	-473	35	4424	-31.36	-25.3	0.08
316	SLU 49	-473	35	4423	-31.29	-25.27	0.08
316	SLU 50	-470	34	4392	-31.04	-25.14	0.08
316	SLU 51	-470	34	4391	-30.97	-25.1	0.08
316	SLU 52	-448	37	4836	-32.96	-24.33	0.08
316	SLU 53	-483	38	4889	-33.94	-26.1	0.08
316	SLU 54	-483	38	4889	-33.87	-26.06	0.08
316	SLU 55	-480	37	4856	-33.49	-25.86	0.08
316	SLU 56	-514	38	4910	-34.47	-27.62	0.09
316	SLU 57	-514	38	4909	-34.4	-27.59	0.09
316	SLU 58	-511	38	4878	-34.14	-27.46	0.08
316	SLU 59	-511	38	4877	-34.07	-27.42	0.08
316	SLU 60	-466	38	5046	-34.41	-25.39	0.09
316	SLU 61	-466	38	5045	-34.34	-25.35	0.09
316	SLU 62	-497	39	5066	-34.94	-26.92	0.09
316	SLU 63	-497	39	5065	-34.87	-26.88	0.09
316	SLU 64	-460	37	4779	-33.15	-24.94	0.08
316	SLU 65	-460	37	4777	-33.03	-24.87	0.08
316	SLU 66	-495	38	4831	-34	-26.63	0.08
316	SLU 67	-495	38	4830	-33.94	-26.59	0.08
316	SLU 68	-492	37	4798	-33.56	-26.4	0.08
316	SLU 69	-526	38	4851	-34.54	-28.16	0.09
316	SLU 70	-526	38	4850	-34.47	-28.12	0.09
316	SLU 71	-523	38	4819	-34.21	-27.99	0.08
316	SLU 72	-523	38	4818	-34.14	-27.95	0.08
316	SLU 73	-501	40	5263	-36.14	-27.19	0.09
316	SLU 74	-536	41	5317	-37.11	-28.95	0.09
316	SLU 75	-536	41	5316	-37.04	-28.91	0.09
316	SLU 76	-533	41	5284	-36.67	-28.72	0.09
316	SLU 77	-567	42	5337	-37.64	-30.48	0.09
316	SLU 78	-567	42	5336	-37.57	-30.44	0.09
316	SLU 79	-564	41	5305	-37.31	-30.31	0.09
316	SLU 80	-564	41	5304	-37.24	-30.27	0.09
316	SLU 81	-519	42	5473	-37.58	-28.25	0.09

Nodo	Cont.	Reazione a traslazione			Reazione a rotazione		
Ind.	N.br.	x	y	z	x	y	z
316	SLU 82	-519	42	5472	-37.51	-28.21	0.09
316	SLU 83	-550	42	5493	-38.11	-29.78	0.09
316	SLU 84	-550	42	5492	-38.04	-29.74	0.09
316	SLE RA 1	-342	27	3582	-24.8	-18.55	0.06
316	SLE RA 2	-342	27	3581	-24.72	-18.51	0.06
316	SLE RA 3	-365	28	3617	-25.37	-19.68	0.06
316	SLE RA 4	-365	28	3616	-25.33	-19.66	0.06
316	SLE RA 5	-363	28	3595	-25.08	-19.53	0.06
316	SLE RA 6	-386	28	3630	-25.73	-20.7	0.06
316	SLE RA 7	-386	28	3630	-25.68	-20.68	0.06
316	SLE RA 8	-384	28	3609	-25.51	-20.59	0.06
316	SLE RA 9	-384	28	3608	-25.46	-20.57	0.06
316	SLE RA 10	-370	30	3905	-26.79	-20.06	0.07
316	SLE RA 11	-393	30	3941	-27.44	-21.23	0.07
316	SLE RA 12	-393	30	3940	-27.4	-21.2	0.07
316	SLE RA 13	-391	30	3919	-27.15	-21.08	0.07
316	SLE RA 14	-414	31	3954	-27.8	-22.25	0.07
316	SLE RA 15	-414	31	3954	-27.75	-22.22	0.07
316	SLE RA 16	-412	31	3933	-27.58	-22.14	0.07
316	SLE RA 17	-412	30	3932	-27.53	-22.11	0.07
316	SLE RA 18	-381	31	4045	-27.76	-20.76	0.07
316	SLE RA 19	-381	31	4044	-27.71	-20.74	0.07
316	SLE RA 20	-402	31	4058	-28.11	-21.78	0.07
316	SLE RA 21	-402	31	4058	-28.06	-21.76	0.07
316	SLE FR 1	-342	27	3582	-24.8	-18.55	0.06
316	SLE FR 2	-342	27	3582	-24.79	-18.55	0.06
316	SLE FR 3	-351	28	3587	-24.94	-18.96	0.06
316	SLE FR 4	-354	28	3721	-25.67	-19.21	0.06
316	SLE FR 5	-363	29	3726	-25.83	-19.62	0.06
316	SLE FR 6	-362	29	3814	-26.28	-19.66	0.07
316	SLE QP 1	-342	27	3582	-24.8	-18.55	0.06
316	SLE QP 2	-354	28	3721	-25.69	-19.22	0.06
316	SLD 1	254	7	3967	-5.26	9	0.06
316	SLD 2	254	7	3967	-5.26	9	0.06
316	SLD 3	94	29	4356	-27.04	1.99	0.11
316	SLD 4	94	29	4356	-27.04	1.99	0.11
316	SLD 5	72	-11	3205	13.48	-0.11	-0.01
316	SLD 6	72	-11	3205	13.48	-0.11	-0.01
316	SLD 7	-463	62	4501	-59.13	-23.49	0.15
316	SLD 8	-463	62	4501	-59.13	-23.49	0.15
316	SLD 9	-245	-5	2940	7.76	-14.94	-0.02
316	SLD 10	-245	-5	2940	7.76	-14.94	-0.02
316	SLD 11	-780	68	4237	-64.85	-38.32	0.14
316	SLD 12	-780	68	4237	-64.85	-38.32	0.14
316	SLD 13	-802	28	3086	-24.33	-40.42	0.02
316	SLD 14	-802	28	3086	-24.33	-40.42	0.02
316	SLD 15	-963	50	3475	-46.12	-47.44	0.07
316	SLD 16	-963	50	3475	-46.12	-47.44	0.07
316	SLV 1	1075	-23	4297	24.39	47.03	0.05
316	SLV 2	1075	-23	4297	24.39	47.03	0.05
316	SLV 3	689	32	5217	-30.47	30.13	0.17
316	SLV 4	689	32	5217	-30.47	30.13	0.17
316	SLV 5	661	-71	2498	72.53	26.28	-0.13
316	SLV 6	661	-71	2498	72.53	26.28	-0.13
316	SLV 7	-628	113	5565	-110.32	-30.04	0.28
316	SLV 8	-628	113	5565	-110.32	-30.04	0.28
316	SLV 9	-80	-56	1876	58.94	-8.4	-0.16
316	SLV 10	-80	-56	1876	58.94	-8.4	-0.16
316	SLV 11	-1370	127	4944	-123.91	-64.72	0.26
316	SLV 12	-1370	127	4944	-123.91	-64.72	0.26
316	SLV 13	-1397	25	2225	-20.91	-68.57	-0.04
316	SLV 14	-1397	25	2225	-20.91	-68.57	-0.04
316	SLV 15	-1784	80	3145	-75.76	-85.46	0.08
316	SLV 16	-1784	80	3145	-75.76	-85.46	0.08
317	SLU 1	-312	26	3166	-22.76	-8.97	0.05
317	SLU 2	-314	26	3156	-22.65	-9.01	0.05
317	SLU 3	-349	27	3221	-23.59	-10.59	0.05
317	SLU 4	-350	26	3216	-23.52	-10.61	0.05
317	SLU 5	-348	26	3186	-23.17	-10.64	0.05
317	SLU 6	-384	27	3252	-24.11	-12.22	0.06
317	SLU 7	-385	27	3246	-24.04	-12.24	0.06
317	SLU 8	-382	27	3226	-23.8	-12.23	0.05
317	SLU 9	-383	27	3220	-23.73	-12.25	0.05
317	SLU 10	-355	29	3593	-25.54	-10.01	0.06
317	SLU 11	-390	30	3659	-26.48	-11.59	0.06
317	SLU 12	-391	30	3653	-26.42	-11.61	0.06
317	SLU 13	-390	29	3624	-26.06	-11.64	0.06
317	SLU 14	-425	30	3689	-27	-13.22	0.06
317	SLU 15	-426	30	3683	-26.94	-13.24	0.06
317	SLU 16	-423	30	3663	-26.69	-13.24	0.06
317	SLU 17	-424	30	3658	-26.63	-13.26	0.06
317	SLU 18	-371	30	3790	-26.89	-10.41	0.06
317	SLU 19	-372	30	3785	-26.83	-10.43	0.06
317	SLU 20	-406	31	3821	-27.41	-12.04	0.06
317	SLU 21	-407	31	3815	-27.35	-12.06	0.06
317	SLU 22	-365	29	3551	-25.74	-10.6	0.06
317	SLU 23	-366	29	3542	-25.63	-10.63	0.06
317	SLU 24	-402	30	3607	-26.57	-12.22	0.06
317	SLU 25	-402	30	3601	-26.5	-12.24	0.06
317	SLU 26	-401	29	3572	-26.15	-12.26	0.06

Nodo	Cont.	Reazione a traslazione			Reazione a rotazione		
Ind.	N.br.	x	y	z	x	y	z
317	SLU 27	-437	31	3637	-27.09	-13.85	0.06
317	SLU 28	-437	30	3632	-27.02	-13.87	0.06
317	SLU 29	-435	30	3612	-26.78	-13.86	0.06
317	SLU 30	-436	30	3606	-26.71	-13.88	0.06
317	SLU 31	-408	32	3979	-28.52	-11.64	0.07
317	SLU 32	-443	33	4044	-29.47	-13.22	0.07
317	SLU 33	-444	33	4039	-29.4	-13.24	0.07
317	SLU 34	-443	33	4009	-29.04	-13.27	0.07
317	SLU 35	-478	34	4075	-29.99	-14.85	0.07
317	SLU 36	-479	34	4069	-29.92	-14.87	0.07
317	SLU 37	-476	33	4049	-29.68	-14.86	0.07
317	SLU 38	-477	33	4043	-29.61	-14.88	0.07
317	SLU 39	-424	34	4176	-29.88	-12.03	0.07
317	SLU 40	-425	34	4170	-29.81	-12.05	0.07
317	SLU 41	-459	34	4206	-30.4	-13.66	0.07
317	SLU 42	-460	34	4201	-30.33	-13.68	0.07
317	SLU 43	-388	32	3983	-28.56	-11.11	0.07
317	SLU 44	-389	32	3974	-28.45	-11.14	0.07
317	SLU 45	-424	33	4039	-29.39	-12.72	0.07
317	SLU 46	-425	33	4033	-29.33	-12.74	0.07
317	SLU 47	-424	33	4004	-28.97	-12.77	0.07
317	SLU 48	-459	34	4069	-29.91	-14.35	0.07
317	SLU 49	-460	34	4063	-29.85	-14.37	0.07
317	SLU 50	-458	33	4043	-29.6	-14.37	0.07
317	SLU 51	-458	33	4038	-29.54	-14.39	0.07
317	SLU 52	-430	35	4411	-31.35	-12.14	0.07
317	SLU 53	-466	36	4476	-32.29	-13.73	0.07
317	SLU 54	-466	36	4470	-32.22	-13.75	0.07
317	SLU 55	-465	36	4441	-31.87	-13.77	0.07
317	SLU 56	-500	37	4506	-32.81	-15.36	0.08
317	SLU 57	-501	37	4501	-32.74	-15.38	0.08
317	SLU 58	-499	37	4481	-32.5	-15.37	0.07
317	SLU 59	-500	37	4475	-32.43	-15.39	0.07
317	SLU 60	-447	37	4608	-32.7	-12.54	0.08
317	SLU 61	-447	37	4602	-32.63	-12.56	0.08
317	SLU 62	-482	37	4638	-33.22	-14.17	0.08
317	SLU 63	-482	37	4632	-33.15	-14.19	0.08
317	SLU 64	-441	36	4369	-31.54	-12.74	0.07
317	SLU 65	-442	35	4359	-31.43	-12.77	0.07
317	SLU 66	-477	36	4425	-32.38	-14.35	0.07
317	SLU 67	-478	36	4419	-32.31	-14.37	0.07
317	SLU 68	-477	36	4389	-31.95	-14.4	0.07
317	SLU 69	-512	37	4455	-32.9	-15.98	0.08
317	SLU 70	-513	37	4449	-32.83	-16	0.08
317	SLU 71	-510	37	4429	-32.59	-16	0.08
317	SLU 72	-511	37	4423	-32.52	-16.02	0.07
317	SLU 73	-483	39	4797	-34.33	-13.77	0.08
317	SLU 74	-518	40	4862	-35.27	-15.35	0.08
317	SLU 75	-519	40	4856	-35.2	-15.37	0.08
317	SLU 76	-518	39	4827	-34.85	-15.4	0.08
317	SLU 77	-553	40	4892	-35.79	-16.98	0.08
317	SLU 78	-554	40	4886	-35.72	-17	0.08
317	SLU 79	-552	40	4866	-35.48	-17	0.08
317	SLU 80	-553	40	4861	-35.41	-17.02	0.08
317	SLU 81	-500	40	4994	-35.68	-14.17	0.08
317	SLU 82	-500	40	4988	-35.61	-14.19	0.08
317	SLU 83	-534	41	5024	-36.2	-15.8	0.08
317	SLU 84	-535	41	5018	-36.13	-15.82	0.08
317	SLE RA 1	-327	27	3276	-23.61	-9.44	0.05
317	SLE RA 2	-328	27	3270	-23.54	-9.46	0.05
317	SLE RA 3	-352	27	3313	-24.16	-10.52	0.06
317	SLE RA 4	-352	27	3309	-24.12	-10.53	0.06
317	SLE RA 5	-351	27	3290	-23.88	-10.55	0.06
317	SLE RA 6	-375	28	3333	-24.51	-11.6	0.06
317	SLE RA 7	-375	28	3329	-24.47	-11.62	0.06
317	SLE RA 8	-374	27	3316	-24.3	-11.61	0.06
317	SLE RA 9	-374	27	3312	-24.26	-11.63	0.06
317	SLE RA 10	-356	29	3561	-25.47	-10.13	0.06
317	SLE RA 11	-379	29	3605	-26.09	-11.18	0.06
317	SLE RA 12	-380	29	3601	-26.05	-11.2	0.06
317	SLE RA 13	-379	29	3581	-25.81	-11.22	0.06
317	SLE RA 14	-402	30	3625	-26.44	-12.27	0.06
317	SLE RA 15	-403	30	3621	-26.4	-12.28	0.06
317	SLE RA 16	-401	30	3608	-26.23	-12.28	0.06
317	SLE RA 17	-402	30	3604	-26.19	-12.29	0.06
317	SLE RA 18	-367	30	3692	-26.37	-10.39	0.06
317	SLE RA 19	-367	30	3689	-26.32	-10.41	0.06
317	SLE RA 20	-390	30	3712	-26.71	-11.48	0.06
317	SLE RA 21	-390	30	3709	-26.67	-11.49	0.06
317	SLE FR 1	-327	27	3276	-23.61	-9.44	0.05
317	SLE FR 2	-327	27	3275	-23.59	-9.44	0.05
317	SLE FR 3	-337	27	3284	-23.75	-9.87	0.05
317	SLE FR 4	-339	28	3400	-24.42	-9.73	0.06
317	SLE FR 5	-348	28	3409	-24.58	-10.16	0.06
317	SLE FR 6	-347	28	3484	-24.99	-9.92	0.06
317	SLE QP 1	-327	27	3276	-23.61	-9.44	0.05
317	SLE QP 2	-339	28	3401	-24.44	-9.73	0.06
317	SLD 1	375	5	3542	-1.54	25.5	0.01
317	SLD 2	375	5	3542	-1.54	25.5	0.01
317	SLD 3	190	30	3917	-27.36	15.93	0.06

Nodo	Cont.	Reazione a traslazione			Reazione a rotazione		
Ind.	N.br.	x	y	z	x	y	z
317	SLD 4	190	30	3917	-27.36	15.93	0.06
317	SLD 5	155	-17	2874	21.6	15.35	-0.04
317	SLD 6	155	-17	2874	21.6	15.35	-0.04
317	SLD 7	-460	66	4124	-64.48	-16.54	0.14
317	SLD 8	-460	66	4124	-64.48	-16.54	0.14
317	SLD 9	-218	-11	2677	15.61	-2.91	-0.03
317	SLD 10	-218	-11	2677	15.61	-2.91	-0.03
317	SLD 11	-833	72	3927	-70.47	-34.8	0.15
317	SLD 12	-833	72	3927	-70.47	-34.8	0.15
317	SLD 13	-869	25	2885	-21.51	-35.38	0.05
317	SLD 14	-869	25	2885	-21.51	-35.38	0.05
317	SLD 15	-1053	51	3260	-47.34	-44.95	0.1
317	SLD 16	-1053	51	3260	-47.34	-44.95	0.1
317	SLV 1	1337	-29	3723	32.07	73.05	-0.06
317	SLV 2	1337	-29	3723	32.07	73.05	-0.06
317	SLV 3	895	34	4623	-33.18	50.03	0.08
317	SLV 4	895	34	4623	-33.18	50.03	0.08
317	SLV 5	835	-85	2132	91.46	50.02	-0.19
317	SLV 6	835	-85	2132	91.46	50.02	-0.19
317	SLV 7	-640	126	5133	-126.01	-26.71	0.27
317	SLV 8	-640	126	5133	-126.01	-26.71	0.27
317	SLV 9	-38	-70	1668	77.14	7.26	-0.16
317	SLV 10	-38	-70	1668	77.14	7.26	-0.16
317	SLV 11	-1513	140	4670	-140.34	-69.47	0.3
317	SLV 12	-1513	140	4670	-140.34	-69.47	0.3
317	SLV 13	-1573	21	2178	-15.7	-69.48	0.03
317	SLV 14	-1573	21	2178	-15.7	-69.48	0.03
317	SLV 15	-2015	84	3079	-80.94	-92.5	0.17
317	SLV 16	-2015	84	3079	-80.94	-92.5	0.17
318	SLU 1	-339	24	2938	-21.27	-17.51	0.03
318	SLU 2	-343	24	2919	-21.16	-17.59	0.03
318	SLU 3	-377	25	2995	-22.07	-19.29	0.03
318	SLU 4	-379	25	2984	-22	-19.33	0.03
318	SLU 5	-379	24	2956	-21.67	-19.28	0.03
318	SLU 6	-414	25	3031	-22.58	-20.98	0.03
318	SLU 7	-416	25	3020	-22.51	-21.02	0.03
318	SLU 8	-413	25	3010	-22.29	-20.89	0.03
318	SLU 9	-415	25	2999	-22.23	-20.94	0.03
318	SLU 10	-394	27	3316	-23.8	-20.25	0.03
318	SLU 11	-429	28	3392	-24.71	-21.95	0.04
318	SLU 12	-431	28	3381	-24.65	-21.99	0.04
318	SLU 13	-431	27	3353	-24.31	-21.94	0.04
318	SLU 14	-465	28	3428	-25.22	-23.64	0.04
318	SLU 15	-467	28	3417	-25.16	-23.68	0.04
318	SLU 16	-464	28	3407	-24.93	-23.55	0.04
318	SLU 17	-466	28	3396	-24.87	-23.6	0.04
318	SLU 18	-413	28	3505	-25.04	-21.31	0.04
318	SLU 19	-415	28	3494	-24.98	-21.36	0.04
318	SLU 20	-449	29	3541	-25.56	-23	0.04
318	SLU 21	-451	29	3530	-25.49	-23.05	0.04
318	SLU 22	-400	27	3289	-24.02	-20.56	0.03
318	SLU 23	-403	27	3271	-23.91	-20.64	0.03
318	SLU 24	-438	28	3346	-24.82	-22.34	0.04
318	SLU 25	-440	28	3335	-24.75	-22.39	0.04
318	SLU 26	-440	27	3307	-24.42	-22.33	0.04
318	SLU 27	-475	29	3383	-25.33	-24.03	0.04
318	SLU 28	-476	28	3372	-25.26	-24.08	0.04
318	SLU 29	-473	28	3361	-25.04	-23.94	0.04
318	SLU 30	-475	28	3350	-24.98	-23.99	0.04
318	SLU 31	-455	30	3668	-26.55	-23.3	0.04
318	SLU 32	-489	31	3743	-27.46	-25	0.04
318	SLU 33	-491	31	3732	-27.39	-25.05	0.04
318	SLU 34	-491	30	3704	-27.06	-24.99	0.04
318	SLU 35	-526	32	3780	-27.97	-26.69	0.04
318	SLU 36	-528	31	3769	-27.91	-26.74	0.04
318	SLU 37	-525	31	3758	-27.68	-26.6	0.04
318	SLU 38	-526	31	3747	-27.62	-26.65	0.04
318	SLU 39	-473	31	3856	-27.79	-24.36	0.04
318	SLU 40	-475	31	3845	-27.73	-24.41	0.04
318	SLU 41	-510	32	3892	-28.3	-26.05	0.04
318	SLU 42	-512	32	3881	-28.24	-26.1	0.04
318	SLU 43	-420	30	3699	-26.7	-21.71	0.04
318	SLU 44	-424	30	3680	-26.6	-21.79	0.04
318	SLU 45	-458	31	3756	-27.5	-23.49	0.04
318	SLU 46	-460	31	3745	-27.44	-23.54	0.04
318	SLU 47	-460	31	3716	-27.11	-23.48	0.04
318	SLU 48	-495	32	3792	-28.02	-25.18	0.04
318	SLU 49	-497	31	3781	-27.95	-25.23	0.04
318	SLU 50	-494	31	3771	-27.73	-25.09	0.04
318	SLU 51	-496	31	3760	-27.66	-25.14	0.04
318	SLU 52	-475	33	4077	-29.24	-24.45	0.04
318	SLU 53	-510	34	4153	-30.15	-26.15	0.04
318	SLU 54	-512	34	4142	-30.08	-26.2	0.04
318	SLU 55	-512	33	4113	-29.75	-26.14	0.04
318	SLU 56	-546	35	4189	-30.66	-27.84	0.04
318	SLU 57	-548	34	4178	-30.59	-27.89	0.04
318	SLU 58	-545	34	4168	-30.37	-27.75	0.04
318	SLU 59	-547	34	4157	-30.31	-27.8	0.04
318	SLU 60	-494	34	4266	-30.48	-25.52	0.04
318	SLU 61	-496	34	4255	-30.42	-25.56	0.04

Nodo	Cont.	Reazione a traslazione			Reazione a rotazione		
Ind.	N.br.	x	y	z	x	y	z
318	SLU 62	-530	35	4302	-30.99	-27.2	0.04
318	SLU 63	-532	35	4291	-30.93	-27.25	0.04
318	SLU 64	-481	33	4050	-29.45	-24.77	0.04
318	SLU 65	-484	33	4031	-29.35	-24.85	0.04
318	SLU 66	-519	34	4107	-30.25	-26.55	0.04
318	SLU 67	-521	34	4096	-30.19	-26.59	0.04
318	SLU 68	-521	34	4068	-29.86	-26.54	0.04
318	SLU 69	-556	35	4144	-30.77	-28.24	0.04
318	SLU 70	-557	35	4132	-30.7	-28.28	0.04
318	SLU 71	-554	34	4122	-30.48	-28.15	0.04
318	SLU 72	-556	34	4111	-30.41	-28.2	0.04
318	SLU 73	-536	36	4428	-31.99	-27.51	0.05
318	SLU 74	-570	37	4504	-32.9	-29.21	0.05
318	SLU 75	-572	37	4493	-32.83	-29.25	0.05
318	SLU 76	-572	37	4465	-32.5	-29.2	0.05
318	SLU 77	-607	38	4541	-33.41	-30.9	0.05
318	SLU 78	-609	38	4529	-33.34	-30.94	0.05
318	SLU 79	-606	37	4519	-33.12	-30.81	0.05
318	SLU 80	-608	37	4508	-33.06	-30.86	0.05
318	SLU 81	-554	37	4617	-33.23	-28.57	0.05
318	SLU 82	-556	37	4606	-33.17	-28.62	0.05
318	SLU 83	-591	38	4653	-33.74	-30.26	0.05
318	SLU 84	-593	38	4642	-33.68	-30.31	0.05
318	SLE RA 1	-357	25	3038	-22.05	-18.38	0.03
318	SLE RA 2	-359	25	3026	-21.98	-18.43	0.03
318	SLE RA 3	-382	25	3076	-22.59	-19.57	0.03
318	SLE RA 4	-383	25	3069	-22.54	-19.6	0.03
318	SLE RA 5	-383	25	3050	-22.32	-19.56	0.03
318	SLE RA 6	-406	26	3101	-22.93	-20.69	0.03
318	SLE RA 7	-408	26	3093	-22.88	-20.72	0.03
318	SLE RA 8	-406	26	3086	-22.74	-20.63	0.03
318	SLE RA 9	-407	26	3079	-22.69	-20.67	0.03
318	SLE RA 10	-393	27	3290	-23.74	-20.21	0.03
318	SLE RA 11	-416	27	3341	-24.35	-21.34	0.04
318	SLE RA 12	-418	27	3334	-24.3	-21.37	0.04
318	SLE RA 13	-417	27	3315	-24.08	-21.33	0.03
318	SLE RA 14	-441	28	3365	-24.69	-22.47	0.04
318	SLE RA 15	-442	28	3358	-24.65	-22.5	0.04
318	SLE RA 16	-440	28	3351	-24.5	-22.41	0.04
318	SLE RA 17	-441	28	3344	-24.45	-22.44	0.04
318	SLE RA 18	-406	28	3416	-24.57	-20.92	0.04
318	SLE RA 19	-407	28	3409	-24.53	-20.95	0.04
318	SLE RA 20	-430	28	3440	-24.91	-22.04	0.04
318	SLE RA 21	-431	28	3433	-24.87	-22.07	0.04
318	SLE FR 1	-357	25	3038	-22.05	-18.38	0.03
318	SLE FR 2	-357	25	3036	-22.04	-18.39	0.03
318	SLE FR 3	-366	25	3048	-22.19	-18.83	0.03
318	SLE FR 4	-372	26	3149	-22.79	-19.15	0.03
318	SLE FR 5	-381	26	3161	-22.94	-19.59	0.03
318	SLE FR 6	-381	26	3227	-23.31	-19.65	0.03
318	SLE QP 1	-357	25	3038	-22.05	-18.38	0.03
318	SLE QP 2	-371	26	3152	-22.81	-19.14	0.03
318	SLD 1	377	2	2619	1.45	14.11	0
318	SLD 2	377	2	2619	1.45	14.11	0
318	SLD 3	199	29	3020	-26.82	6.46	0.04
318	SLD 4	199	29	3020	-26.82	6.46	0.04
318	SLD 5	122	-23	2383	27.35	2.45	-0.03
318	SLD 6	122	-23	2383	27.35	2.45	-0.03
318	SLD 7	-470	68	3720	-66.89	-23.08	0.09
318	SLD 8	-470	68	3720	-66.89	-23.08	0.09
318	SLD 9	-273	-17	2583	21.27	-15.21	-0.02
318	SLD 10	-273	-17	2583	21.27	-15.21	-0.02
318	SLD 11	-865	74	3920	-72.96	-40.73	0.09
318	SLD 12	-865	74	3920	-72.96	-40.73	0.09
318	SLD 13	-942	22	3283	-18.79	-44.74	0.03
318	SLD 14	-942	22	3283	-18.79	-44.74	0.03
318	SLD 15	-1119	50	3684	-47.07	-52.4	0.06
318	SLD 16	-1119	50	3684	-47.07	-52.4	0.06
318	SLV 1	1384	-33	1881	37.3	58.89	-0.04
318	SLV 2	1384	-33	1881	37.3	58.89	-0.04
318	SLV 3	958	36	2862	-34.18	40.51	0.05
318	SLV 4	958	36	2862	-34.18	40.51	0.05
318	SLV 5	802	-96	1284	103.63	32.14	-0.12
318	SLV 6	802	-96	1284	103.63	32.14	-0.12
318	SLV 7	-619	133	4551	-134.63	-29.12	0.17
318	SLV 8	-619	133	4551	-134.63	-29.12	0.17
318	SLV 9	-123	-81	1752	89.01	-9.16	-0.1
318	SLV 10	-123	-81	1752	89.01	-9.16	-0.1
318	SLV 11	-1545	148	5019	-149.25	-70.42	0.19
318	SLV 12	-1545	148	5019	-149.25	-70.42	0.19
318	SLV 13	-1700	16	3441	-11.43	-78.79	0.02
318	SLV 14	-1700	16	3441	-11.43	-78.79	0.02
318	SLV 15	-2127	84	4422	-82.91	-97.17	0.11
318	SLV 16	-2127	84	4422	-82.91	-97.17	0.11
319	SLU 1	-173	22	2830	-19.4	-4.86	0
319	SLU 2	-179	22	2800	-19.3	-5.12	0
319	SLU 3	-206	23	2891	-20.15	-6.34	0
319	SLU 4	-210	23	2873	-20.09	-6.49	0
319	SLU 5	-214	22	2842	-19.8	-6.7	0
319	SLU 6	-241	23	2932	-20.65	-7.92	0

Nodo	Cont.	Reazione a traslazione			Reazione a rotazione		
Ind.	N.br.	x	y	z	x	y	z
319	SLU 7	-245	23	2915	-20.59	-8.08	0
319	SLU 8	-243	23	2913	-20.39	-8.03	0
319	SLU 9	-247	23	2896	-20.34	-8.18	0
319	SLU 10	-210	24	3173	-21.65	-5.94	0
319	SLU 11	-237	25	3263	-22.51	-7.16	0.01
319	SLU 12	-241	25	3245	-22.45	-7.32	0.01
319	SLU 13	-245	25	3215	-22.15	-7.53	0.01
319	SLU 14	-272	26	3305	-23.01	-8.75	0.01
319	SLU 15	-276	26	3287	-22.95	-8.9	0.01
319	SLU 16	-273	26	3286	-22.75	-8.85	0.01
319	SLU 17	-277	26	3268	-22.69	-9.01	0.01
319	SLU 18	-216	26	3362	-22.76	-6.04	0.01
319	SLU 19	-220	26	3344	-22.7	-6.2	0.01
319	SLU 20	-251	26	3404	-23.26	-7.62	0.01
319	SLU 21	-255	26	3386	-23.2	-7.78	0.01
319	SLU 22	-212	25	3161	-21.87	-6.16	0.01
319	SLU 23	-219	24	3132	-21.77	-6.42	0
319	SLU 24	-246	26	3222	-22.63	-7.64	0.01
319	SLU 25	-250	25	3204	-22.57	-7.79	0.01
319	SLU 26	-254	25	3174	-22.27	-8	0.01
319	SLU 27	-281	26	3264	-23.13	-9.22	0.01
319	SLU 28	-285	26	3246	-23.07	-9.38	0.01
319	SLU 29	-282	26	3245	-22.87	-9.33	0.01
319	SLU 30	-286	26	3227	-22.81	-9.48	0.01
319	SLU 31	-249	27	3504	-24.13	-7.25	0.01
319	SLU 32	-276	28	3594	-24.99	-8.46	0.01
319	SLU 33	-280	28	3577	-24.93	-8.62	0.01
319	SLU 34	-284	28	3546	-24.63	-8.83	0.01
319	SLU 35	-311	29	3636	-25.49	-10.05	0.01
319	SLU 36	-315	29	3618	-25.43	-10.2	0.01
319	SLU 37	-312	28	3617	-25.23	-10.16	0.01
319	SLU 38	-316	28	3600	-25.17	-10.31	0.01
319	SLU 39	-255	28	3693	-25.24	-7.34	0.01
319	SLU 40	-259	28	3676	-25.18	-7.5	0.01
319	SLU 41	-290	29	3735	-25.74	-8.92	0.01
319	SLU 42	-294	29	3717	-25.68	-9.08	0.01
319	SLU 43	-211	28	3565	-24.37	-5.87	0.01
319	SLU 44	-218	27	3536	-24.27	-6.13	0.01
319	SLU 45	-245	28	3626	-25.12	-7.35	0.01
319	SLU 46	-249	28	3608	-25.06	-7.5	0.01
319	SLU 47	-253	28	3578	-24.77	-7.71	0.01
319	SLU 48	-279	29	3668	-25.62	-8.93	0.01
319	SLU 49	-284	29	3650	-25.56	-9.09	0.01
319	SLU 50	-281	29	3649	-25.36	-9.04	0.01
319	SLU 51	-285	29	3631	-25.3	-9.19	0.01
319	SLU 52	-248	30	3908	-26.62	-6.96	0.01
319	SLU 53	-275	31	3998	-27.48	-8.17	0.01
319	SLU 54	-279	31	3981	-27.42	-8.33	0.01
319	SLU 55	-283	31	3950	-27.12	-8.54	0.01
319	SLU 56	-310	32	4040	-27.98	-9.76	0.01
319	SLU 57	-314	31	4022	-27.92	-9.91	0.01
319	SLU 58	-311	31	4021	-27.72	-9.87	0.01
319	SLU 59	-315	31	4004	-27.66	-10.02	0.01
319	SLU 60	-254	31	4097	-27.73	-7.05	0.01
319	SLU 61	-258	31	4080	-27.67	-7.21	0.01
319	SLU 62	-289	32	4139	-28.23	-8.64	0.01
319	SLU 63	-293	32	4121	-28.17	-8.79	0.01
319	SLU 64	-250	30	3897	-26.84	-7.17	0.01
319	SLU 65	-257	30	3867	-26.74	-7.43	0.01
319	SLU 66	-284	31	3957	-27.6	-8.65	0.01
319	SLU 67	-288	31	3940	-27.54	-8.8	0.01
319	SLU 68	-292	31	3909	-27.24	-9.02	0.01
319	SLU 69	-319	32	3999	-28.1	-10.23	0.01
319	SLU 70	-323	32	3981	-28.04	-10.39	0.01
319	SLU 71	-320	31	3980	-27.84	-10.34	0.01
319	SLU 72	-324	31	3963	-27.78	-10.5	0.01
319	SLU 73	-287	33	4240	-29.1	-8.26	0.01
319	SLU 74	-314	34	4330	-29.96	-9.47	0.01
319	SLU 75	-318	34	4312	-29.9	-9.63	0.01
319	SLU 76	-322	33	4281	-29.6	-9.84	0.01
319	SLU 77	-349	34	4372	-30.46	-11.06	0.01
319	SLU 78	-353	34	4354	-30.4	-11.22	0.01
319	SLU 79	-351	34	4353	-30.2	-11.17	0.01
319	SLU 80	-355	34	4335	-30.14	-11.32	0.01
319	SLU 81	-294	34	4429	-30.21	-8.35	0.01
319	SLU 82	-298	34	4411	-30.15	-8.51	0.01
319	SLU 83	-329	35	4471	-30.71	-9.94	0.01
319	SLU 84	-333	34	4453	-30.65	-10.09	0.01
319	SLE RA 1	-184	23	2925	-20.1	-5.23	0
319	SLE RA 2	-188	23	2905	-20.04	-5.4	0
319	SLE RA 3	-206	23	2965	-20.61	-6.22	0
319	SLE RA 4	-209	23	2953	-20.57	-6.32	0
319	SLE RA 5	-212	23	2933	-20.37	-6.46	0
319	SLE RA 6	-230	24	2993	-20.94	-7.27	0
319	SLE RA 7	-232	24	2981	-20.9	-7.38	0
319	SLE RA 8	-231	23	2980	-20.77	-7.34	0
319	SLE RA 9	-233	23	2969	-20.73	-7.45	0
319	SLE RA 10	-209	24	3153	-21.61	-5.95	0
319	SLE RA 11	-226	25	3213	-22.18	-6.77	0.01
319	SLE RA 12	-229	25	3202	-22.14	-6.87	0.01

Nodo	Cont.	Reazione a traslazione			Reazione a rotazione		
Ind.	N.br.	x	y	z	x	y	z
319	SLE RA 13	-232	25	3181	-21.94	-7.01	0.01
319	SLE RA 14	-250	25	3241	-22.51	-7.82	0.01
319	SLE RA 15	-253	25	3229	-22.47	-7.93	0.01
319	SLE RA 16	-251	25	3229	-22.34	-7.89	0.01
319	SLE RA 17	-253	25	3217	-22.3	-8	0.01
319	SLE RA 18	-213	25	3279	-22.35	-6.02	0.01
319	SLE RA 19	-215	25	3268	-22.31	-6.12	0.01
319	SLE RA 20	-236	26	3307	-22.68	-7.07	0.01
319	SLE RA 21	-239	25	3295	-22.64	-7.18	0.01
319	SLE FR 1	-184	23	2925	-20.1	-5.23	0
319	SLE FR 2	-185	23	2921	-20.09	-5.26	0
319	SLE FR 3	-193	23	2936	-20.24	-5.65	0
319	SLE FR 4	-193	23	3027	-20.76	-5.5	0
319	SLE FR 5	-202	24	3042	-20.91	-5.89	0
319	SLE FR 6	-198	24	3102	-21.23	-5.62	0
319	SLE QP 1	-184	23	2925	-20.1	-5.23	0
319	SLE QP 2	-193	23	3031	-20.78	-5.47	0
319	SLD 1	597	0	2439	3.56	31.2	0
319	SLD 2	597	0	2439	3.56	31.2	0
319	SLD 3	408	27	2871	-25.22	22.03	0
319	SLD 4	408	27	2871	-25.22	22.03	0
319	SLD 5	331	-26	2199	30.17	19.44	0
319	SLD 6	331	-26	2199	30.17	19.44	0
319	SLD 7	-299	67	3637	-65.75	-11.12	0.01
319	SLD 8	-299	67	3637	-65.75	-11.12	0.01
319	SLD 9	-86	-20	2425	24.2	0.19	0
319	SLD 10	-86	-20	2425	24.2	0.19	0
319	SLD 11	-716	72	3863	-71.72	-30.37	0.01
319	SLD 12	-716	72	3863	-71.72	-30.37	0.01
319	SLD 13	-793	19	3191	-16.34	-32.96	0.01
319	SLD 14	-793	19	3191	-16.34	-32.96	0.01
319	SLD 15	-982	47	3623	-45.11	-42.13	0.01
319	SLD 16	-982	47	3623	-45.11	-42.13	0.01
319	SLV 1	1662	-35	1618	39.7	80.69	-0.01
319	SLV 2	1662	-35	1618	39.7	80.69	-0.01
319	SLV 3	1207	35	2678	-33.05	58.58	0
319	SLV 4	1207	35	2678	-33.05	58.58	0
319	SLV 5	1053	-100	1000	107.7	53.91	-0.01
319	SLV 6	1053	-100	1000	107.7	53.91	-0.01
319	SLV 7	-462	133	4533	-134.79	-19.78	0.02
319	SLV 8	-462	133	4533	-134.79	-19.78	0.02
319	SLV 9	77	-86	1529	93.24	8.85	-0.01
319	SLV 10	77	-86	1529	93.24	8.85	-0.01
319	SLV 11	-1438	147	5063	-149.26	-64.84	0.02
319	SLV 12	-1438	147	5063	-149.26	-64.84	0.02
319	SLV 13	-1593	12	3384	-8.51	-69.51	0.01
319	SLV 14	-1593	12	3384	-8.51	-69.51	0.01
319	SLV 15	-2047	82	4444	-81.25	-91.62	0.02
319	SLV 16	-2047	82	4444	-81.25	-91.62	0.02
320	SLU 1	-78	20	2925	-17.15	-7.07	-0.02
320	SLU 2	-89	20	2881	-17.07	-7.43	-0.02
320	SLU 3	-107	21	2995	-17.84	-8.48	-0.02
320	SLU 4	-113	21	2968	-17.8	-8.7	-0.02
320	SLU 5	-120	20	2931	-17.54	-8.93	-0.02
320	SLU 6	-138	21	3045	-18.32	-9.98	-0.02
320	SLU 7	-144	21	3018	-18.27	-10.2	-0.02
320	SLU 8	-140	21	3026	-18.1	-10.06	-0.02
320	SLU 9	-147	21	2999	-18.05	-10.28	-0.02
320	SLU 10	-111	22	3257	-19.12	-8.94	-0.02
320	SLU 11	-129	23	3371	-19.89	-9.99	-0.02
320	SLU 12	-135	23	3344	-19.84	-10.21	-0.02
320	SLU 13	-142	23	3308	-19.59	-10.44	-0.02
320	SLU 14	-160	24	3421	-20.36	-11.49	-0.03
320	SLU 15	-166	23	3395	-20.32	-11.71	-0.02
320	SLU 16	-162	23	3403	-20.14	-11.57	-0.02
320	SLU 17	-169	23	3376	-20.1	-11.79	-0.02
320	SLU 18	-109	23	3463	-20.07	-9.22	-0.02
320	SLU 19	-116	23	3437	-20.02	-9.44	-0.02
320	SLU 20	-141	24	3514	-20.54	-10.72	-0.03
320	SLU 21	-147	24	3487	-20.5	-10.94	-0.03
320	SLU 22	-107	22	3264	-19.32	-8.86	-0.02
320	SLU 23	-117	22	3220	-19.24	-9.23	-0.02
320	SLU 24	-135	23	3334	-20.01	-10.28	-0.02
320	SLU 25	-142	23	3307	-19.97	-10.5	-0.02
320	SLU 26	-149	23	3270	-19.71	-10.72	-0.02
320	SLU 27	-167	24	3384	-20.49	-11.78	-0.03
320	SLU 28	-173	24	3357	-20.44	-12	-0.03
320	SLU 29	-169	23	3365	-20.27	-11.86	-0.02
320	SLU 30	-176	23	3338	-20.22	-12.08	-0.02
320	SLU 31	-140	24	3596	-21.29	-10.73	-0.03
320	SLU 32	-157	25	3710	-22.06	-11.79	-0.03
320	SLU 33	-164	25	3683	-22.01	-12.01	-0.03
320	SLU 34	-171	25	3647	-21.76	-12.23	-0.03
320	SLU 35	-189	26	3760	-22.53	-13.29	-0.03
320	SLU 36	-195	26	3734	-22.49	-13.51	-0.03
320	SLU 37	-191	26	3742	-22.31	-13.37	-0.03
320	SLU 38	-198	26	3715	-22.27	-13.59	-0.03
320	SLU 39	-138	26	3802	-22.24	-11.02	-0.03
320	SLU 40	-145	26	3776	-22.19	-11.24	-0.03
320	SLU 41	-169	26	3852	-22.71	-12.52	-0.03

Nodo	Cont.	Reazione a traslazione			Reazione a rotazione		
Ind.	N.br.	x	y	z	x	y	z
320	SLU 42	-176	26	3826	-22.67	-12.73	-0.03
320	SLU 43	-91	25	3687	-21.55	-8.57	-0.03
320	SLU 44	-102	25	3642	-21.47	-8.93	-0.03
320	SLU 45	-120	26	3756	-22.24	-9.99	-0.03
320	SLU 46	-126	26	3729	-22.2	-10.21	-0.03
320	SLU 47	-133	25	3693	-21.94	-10.43	-0.03
320	SLU 48	-151	26	3806	-22.72	-11.49	-0.03
320	SLU 49	-158	26	3780	-22.67	-11.7	-0.03
320	SLU 50	-154	26	3787	-22.5	-11.57	-0.03
320	SLU 51	-160	26	3761	-22.45	-11.78	-0.03
320	SLU 52	-124	27	4019	-23.52	-10.44	-0.03
320	SLU 53	-142	28	4132	-24.29	-11.5	-0.03
320	SLU 54	-148	28	4106	-24.24	-11.72	-0.03
320	SLU 55	-155	28	4069	-23.99	-11.94	-0.03
320	SLU 56	-173	29	4183	-24.76	-13	-0.03
320	SLU 57	-180	29	4156	-24.72	-13.21	-0.03
320	SLU 58	-176	28	4164	-24.54	-13.07	-0.03
320	SLU 59	-182	28	4137	-24.5	-13.29	-0.03
320	SLU 60	-123	28	4224	-24.47	-10.73	-0.03
320	SLU 61	-129	28	4198	-24.42	-10.94	-0.03
320	SLU 62	-154	29	4275	-24.94	-12.22	-0.03
320	SLU 63	-161	29	4248	-24.9	-12.44	-0.03
320	SLU 64	-120	27	4026	-23.72	-10.37	-0.03
320	SLU 65	-131	27	3981	-23.64	-10.73	-0.03
320	SLU 66	-149	28	4095	-24.41	-11.78	-0.03
320	SLU 67	-155	28	4068	-24.37	-12	-0.03
320	SLU 68	-162	28	4032	-24.11	-12.23	-0.03
320	SLU 69	-180	29	4145	-24.89	-13.28	-0.03
320	SLU 70	-186	29	4119	-24.84	-13.5	-0.03
320	SLU 71	-183	29	4126	-24.67	-13.36	-0.03
320	SLU 72	-189	28	4100	-24.62	-13.58	-0.03
320	SLU 73	-153	30	4358	-25.69	-12.24	-0.03
320	SLU 74	-171	31	4471	-26.46	-13.29	-0.03
320	SLU 75	-177	30	4445	-26.41	-13.51	-0.03
320	SLU 76	-184	30	4408	-26.16	-13.74	-0.03
320	SLU 77	-202	31	4522	-26.93	-14.79	-0.03
320	SLU 78	-209	31	4495	-26.89	-15.01	-0.03
320	SLU 79	-205	31	4503	-26.71	-14.87	-0.03
320	SLU 80	-211	31	4476	-26.67	-15.09	-0.03
320	SLU 81	-152	31	4563	-26.64	-12.52	-0.03
320	SLU 82	-158	31	4537	-26.59	-12.74	-0.03
320	SLU 83	-183	31	4614	-27.11	-14.02	-0.03
320	SLU 84	-189	31	4587	-27.07	-14.24	-0.03
320	SLE RA 1	-86	21	3022	-17.77	-7.58	-0.02
320	SLE RA 2	-93	20	2993	-17.72	-7.82	-0.02
320	SLE RA 3	-105	21	3068	-18.23	-8.52	-0.02
320	SLE RA 4	-110	21	3051	-18.2	-8.67	-0.02
320	SLE RA 5	-114	21	3026	-18.03	-8.82	-0.02
320	SLE RA 6	-126	21	3102	-18.55	-9.52	-0.02
320	SLE RA 7	-130	21	3084	-18.52	-9.67	-0.02
320	SLE RA 8	-128	21	3089	-18.4	-9.58	-0.02
320	SLE RA 9	-132	21	3072	-18.37	-9.72	-0.02
320	SLE RA 10	-108	22	3244	-19.08	-8.83	-0.02
320	SLE RA 11	-120	23	3319	-19.6	-9.53	-0.02
320	SLE RA 12	-124	23	3302	-19.57	-9.68	-0.02
320	SLE RA 13	-129	22	3277	-19.4	-9.83	-0.02
320	SLE RA 14	-141	23	3353	-19.91	-10.53	-0.02
320	SLE RA 15	-145	23	3335	-19.88	-10.67	-0.02
320	SLE RA 16	-142	23	3340	-19.76	-10.58	-0.02
320	SLE RA 17	-147	23	3323	-19.73	-10.73	-0.02
320	SLE RA 18	-107	23	3381	-19.72	-9.02	-0.02
320	SLE RA 19	-111	23	3363	-19.69	-9.16	-0.02
320	SLE RA 20	-128	23	3414	-20.03	-10.01	-0.02
320	SLE RA 21	-132	23	3397	-20	-10.16	-0.02
320	SLE FR 1	-86	21	3022	-17.77	-7.58	-0.02
320	SLE FR 2	-88	20	3016	-17.76	-7.63	-0.02
320	SLE FR 3	-94	21	3036	-17.89	-7.98	-0.02
320	SLE FR 4	-94	21	3124	-18.34	-8.06	-0.02
320	SLE FR 5	-101	21	3143	-18.48	-8.41	-0.02
320	SLE FR 6	-97	22	3201	-18.74	-8.3	-0.02
320	SLE QP 1	-86	21	3022	-17.77	-7.58	-0.02
320	SLE QP 2	-92	21	3130	-18.35	-8.01	-0.02
320	SLD 1	665	-1	2455	4.7	26.26	0
320	SLD 2	665	-1	2455	4.7	26.26	0
320	SLD 3	488	25	2901	-22.44	18.45	-0.03
320	SLD 4	488	25	2901	-22.44	18.45	-0.03
320	SLD 5	402	-25	2252	29.73	14.11	0.03
320	SLD 6	402	-25	2252	29.73	14.11	0.03
320	SLD 7	-186	61	3736	-60.74	-11.92	-0.07
320	SLD 8	-186	61	3736	-60.74	-11.92	-0.07
320	SLD 9	1	-19	2523	24.04	-4.1	0.02
320	SLD 10	1	-19	2523	24.04	-4.1	0.02
320	SLD 11	-587	67	4007	-66.43	-30.13	-0.08
320	SLD 12	-587	67	4007	-66.43	-30.13	-0.08
320	SLD 13	-673	18	3359	-14.26	-34.47	-0.02
320	SLD 14	-673	18	3359	-14.26	-34.47	-0.02
320	SLD 15	-849	44	3804	-41.4	-42.28	-0.05
320	SLD 16	-849	44	3804	-41.4	-42.28	-0.05
320	SLV 1	1684	-35	1526	39.07	72.39	0.04
320	SLV 2	1684	-35	1526	39.07	72.39	0.04

Nodo	Cont.	Reazione a traslazione			Reazione a rotazione		
Ind.	N.br.	x	y	z	x	y	z
320	SLV 3	1260	31	2615	-29.52	53.62	-0.04
320	SLV 4	1260	31	2615	-29.52	53.62	-0.04
320	SLV 5	1084	-94	997	102.89	44.58	0.11
320	SLV 6	1084	-94	997	102.89	44.58	0.11
320	SLV 7	-331	123	4627	-125.72	-17.99	-0.14
320	SLV 8	-331	123	4627	-125.72	-17.99	-0.14
320	SLV 9	146	-80	1632	89.02	1.97	0.1
320	SLV 10	146	-80	1632	89.02	1.97	0.1
320	SLV 11	-1269	137	5263	-139.59	-60.6	-0.16
320	SLV 12	-1269	137	5263	-139.59	-60.6	-0.16
320	SLV 13	-1445	12	3644	-7.19	-69.64	-0.01
320	SLV 14	-1445	12	3644	-7.19	-69.64	-0.01
320	SLV 15	-1869	77	4733	-75.77	-88.41	-0.09
320	SLV 16	-1869	77	4733	-75.77	-88.41	-0.09
321	SLU 1	83	17	3223	-14.31	3.79	-0.04
321	SLU 2	68	17	3158	-14.28	3.18	-0.04
321	SLU 3	63	18	3310	-14.92	2.83	-0.04
321	SLU 4	54	18	3271	-14.9	2.46	-0.04
321	SLU 5	43	17	3224	-14.7	2	-0.04
321	SLU 6	39	18	3376	-15.34	1.64	-0.04
321	SLU 7	29	18	3337	-15.32	1.28	-0.04
321	SLU 8	34	18	3355	-15.16	1.42	-0.04
321	SLU 9	25	18	3316	-15.14	1.06	-0.04
321	SLU 10	65	19	3566	-15.97	3.19	-0.04
321	SLU 11	61	20	3718	-16.61	2.83	-0.04
321	SLU 12	52	20	3679	-16.59	2.47	-0.04
321	SLU 13	41	19	3632	-16.39	2	-0.04
321	SLU 14	36	20	3784	-17.03	1.65	-0.05
321	SLU 15	27	20	3745	-17.01	1.28	-0.05
321	SLU 16	31	20	3763	-16.85	1.43	-0.05
321	SLU 17	22	20	3724	-16.83	1.06	-0.04
321	SLU 18	80	20	3806	-16.73	3.8	-0.04
321	SLU 19	71	20	3767	-16.71	3.43	-0.04
321	SLU 20	55	20	3872	-17.15	2.61	-0.05
321	SLU 21	46	20	3833	-17.13	2.25	-0.05
321	SLU 22	76	19	3597	-16.12	3.53	-0.04
321	SLU 23	61	19	3532	-16.08	2.92	-0.04
321	SLU 24	56	20	3684	-16.72	2.56	-0.04
321	SLU 25	47	20	3645	-16.7	2.2	-0.04
321	SLU 26	36	20	3599	-16.51	1.74	-0.04
321	SLU 27	31	20	3750	-17.14	1.38	-0.05
321	SLU 28	22	20	3711	-17.12	1.02	-0.05
321	SLU 29	27	20	3729	-16.96	1.16	-0.05
321	SLU 30	17	20	3690	-16.94	0.8	-0.05
321	SLU 31	58	21	3940	-17.77	2.92	-0.05
321	SLU 32	54	22	4092	-18.41	2.57	-0.05
321	SLU 33	44	22	4053	-18.39	2.2	-0.05
321	SLU 34	34	22	4007	-18.19	1.74	-0.05
321	SLU 35	29	22	4158	-18.83	1.38	-0.05
321	SLU 36	20	22	4119	-18.81	1.02	-0.05
321	SLU 37	24	22	4137	-18.65	1.16	-0.05
321	SLU 38	15	22	4098	-18.63	0.8	-0.05
321	SLU 39	73	22	4180	-18.53	3.53	-0.05
321	SLU 40	63	22	4141	-18.51	3.17	-0.05
321	SLU 41	48	23	4246	-18.95	2.35	-0.05
321	SLU 42	39	23	4207	-18.93	1.99	-0.05
321	SLU 43	111	21	4061	-17.99	5.02	-0.05
321	SLU 44	95	21	3997	-17.96	4.41	-0.05
321	SLU 45	91	22	4148	-18.59	4.05	-0.05
321	SLU 46	81	22	4110	-18.57	3.69	-0.05
321	SLU 47	71	22	4063	-18.38	3.23	-0.05
321	SLU 48	66	23	4214	-19.02	2.87	-0.05
321	SLU 49	57	23	4176	-19	2.51	-0.05
321	SLU 50	61	23	4193	-18.83	2.65	-0.05
321	SLU 51	52	22	4155	-18.81	2.29	-0.05
321	SLU 52	93	23	4405	-19.64	4.41	-0.05
321	SLU 53	88	24	4556	-20.28	4.06	-0.05
321	SLU 54	79	24	4518	-20.26	3.69	-0.05
321	SLU 55	68	24	4471	-20.07	3.23	-0.05
321	SLU 56	64	25	4622	-20.7	2.87	-0.06
321	SLU 57	54	25	4584	-20.68	2.51	-0.06
321	SLU 58	59	25	4601	-20.52	2.65	-0.06
321	SLU 59	50	24	4563	-20.5	2.29	-0.05
321	SLU 60	107	24	4644	-20.4	5.02	-0.05
321	SLU 61	98	24	4605	-20.38	4.66	-0.05
321	SLU 62	83	25	4710	-20.82	3.84	-0.06
321	SLU 63	73	25	4671	-20.8	3.48	-0.06
321	SLU 64	104	24	4435	-19.79	4.75	-0.05
321	SLU 65	88	23	4371	-19.76	4.15	-0.05
321	SLU 66	84	24	4522	-20.4	3.79	-0.05
321	SLU 67	74	24	4484	-20.38	3.43	-0.05
321	SLU 68	63	24	4437	-20.18	2.97	-0.05
321	SLU 69	59	25	4589	-20.82	2.61	-0.06
321	SLU 70	50	25	4550	-20.8	2.24	-0.06
321	SLU 71	54	25	4568	-20.64	2.39	-0.06
321	SLU 72	45	25	4529	-20.62	2.02	-0.06
321	SLU 73	86	25	4779	-21.45	4.15	-0.06
321	SLU 74	81	26	4930	-22.09	3.79	-0.06
321	SLU 75	72	26	4892	-22.07	3.43	-0.06
321	SLU 76	61	26	4845	-21.87	2.97	-0.06

Nodo	Cont.	Reazione a traslazione			Reazione a rotazione		
Ind.	N.br.	x	y	z	x	y	z
321	SLU 77	56	27	4997	-22.51	2.61	-0.06
321	SLU 78	47	27	4958	-22.49	2.25	-0.06
321	SLU 79	52	27	4976	-22.33	2.39	-0.06
321	SLU 80	42	27	4937	-22.31	2.03	-0.06
321	SLU 81	100	26	5018	-22.21	4.76	-0.06
321	SLU 82	91	26	4980	-22.18	4.4	-0.06
321	SLU 83	75	27	5084	-22.63	3.58	-0.06
321	SLU 84	66	27	5046	-22.61	3.21	-0.06
321	SLE RA 1	81	18	3330	-14.83	3.72	-0.04
321	SLE RA 2	71	18	3287	-14.81	3.31	-0.04
321	SLE RA 3	68	18	3388	-15.23	3.07	-0.04
321	SLE RA 4	62	18	3362	-15.22	2.83	-0.04
321	SLE RA 5	54	18	3331	-15.09	2.52	-0.04
321	SLE RA 6	51	19	3432	-15.51	2.28	-0.04
321	SLE RA 7	45	18	3406	-15.5	2.04	-0.04
321	SLE RA 8	48	18	3418	-15.39	2.14	-0.04
321	SLE RA 9	42	18	3392	-15.38	1.89	-0.04
321	SLE RA 10	69	19	3559	-15.93	3.31	-0.04
321	SLE RA 11	66	19	3660	-16.36	3.07	-0.04
321	SLE RA 12	60	19	3634	-16.34	2.83	-0.04
321	SLE RA 13	53	19	3603	-16.21	2.52	-0.04
321	SLE RA 14	50	20	3704	-16.64	2.29	-0.04
321	SLE RA 15	44	20	3678	-16.63	2.04	-0.04
321	SLE RA 16	47	20	3690	-16.52	2.14	-0.04
321	SLE RA 17	41	20	3664	-16.5	1.9	-0.04
321	SLE RA 18	79	20	3718	-16.44	3.72	-0.04
321	SLE RA 19	73	20	3692	-16.42	3.48	-0.04
321	SLE RA 20	62	20	3762	-16.72	2.93	-0.04
321	SLE RA 21	56	20	3736	-16.7	2.69	-0.04
321	SLE FR 1	81	18	3330	-14.83	3.72	-0.04
321	SLE FR 2	79	18	3321	-14.82	3.63	-0.04
321	SLE FR 3	75	18	3347	-14.94	3.4	-0.04
321	SLE FR 4	79	18	3438	-15.31	3.64	-0.04
321	SLE FR 5	74	18	3464	-15.42	3.4	-0.04
321	SLE FR 6	80	19	3524	-15.63	3.72	-0.04
321	SLE QP 1	81	18	3330	-14.83	3.72	-0.04
321	SLE QP 2	81	18	3446	-15.31	3.72	-0.04
321	SLD 1	608	-2	2609	5.14	36.29	0
321	SLD 2	608	-2	2609	5.14	36.29	0
321	SLD 3	780	20	3078	-18.29	28.28	-0.05
321	SLD 4	780	20	3078	-18.29	28.28	-0.05
321	SLD 5	-22	-21	2484	26.36	25.63	0.05
321	SLD 6	-22	-21	2484	26.36	25.63	0.05
321	SLD 7	551	51	4047	-51.74	-1.05	-0.12
321	SLD 8	551	51	4047	-51.74	-1.05	-0.12
321	SLD 9	-390	-15	2846	21.12	8.49	0.04
321	SLD 10	-390	-15	2846	21.12	8.49	0.04
321	SLD 11	183	57	4408	-56.99	-18.19	-0.13
321	SLD 12	183	57	4408	-56.99	-18.19	-0.13
321	SLD 13	-619	17	3815	-12.34	-20.85	-0.04
321	SLD 14	-619	17	3815	-12.34	-20.85	-0.04
321	SLD 15	-447	39	4283	-35.77	-28.85	-0.09
321	SLD 16	-447	39	4283	-35.77	-28.85	-0.09
321	SLV 1	1308	-32	1469	35.72	80.2	0.07
321	SLV 2	1308	-32	1469	35.72	80.2	0.07
321	SLV 3	1722	22	2599	-23.46	60.87	-0.06
321	SLV 4	1722	22	2599	-23.46	60.87	-0.06
321	SLV 5	-181	-79	1139	89.75	55.99	0.18
321	SLV 6	-181	-79	1139	89.75	55.99	0.18
321	SLV 7	1202	102	4906	-107.51	-8.46	-0.24
321	SLV 8	1202	102	4906	-107.51	-8.46	-0.24
321	SLV 9	-1041	-65	1986	76.89	15.9	0.16
321	SLV 10	-1041	-65	1986	76.89	15.9	0.16
321	SLV 11	342	116	5753	-120.37	-48.55	-0.27
321	SLV 12	342	116	5753	-120.37	-48.55	-0.27
321	SLV 13	-1561	14	4293	-7.16	-53.43	-0.03
321	SLV 14	-1561	14	4293	-7.16	-53.43	-0.03
321	SLV 15	-1146	69	5423	-66.34	-72.77	-0.15
321	SLV 16	-1146	69	5423	-66.34	-72.77	-0.15
322	SLU 1	94	13	3703	-10.8	-1	-0.03
322	SLU 2	76	13	3613	-10.82	-1.63	-0.03
322	SLU 3	79	14	3818	-11.26	-1.96	-0.03
322	SLU 4	68	14	3764	-11.28	-2.34	-0.03
322	SLU 5	56	14	3703	-11.15	-2.77	-0.03
322	SLU 6	58	14	3908	-11.6	-3.1	-0.03
322	SLU 7	47	14	3854	-11.61	-3.48	-0.03
322	SLU 8	53	14	3883	-11.46	-3.28	-0.03
322	SLU 9	42	14	3829	-11.47	-3.66	-0.03
322	SLU 10	70	15	4075	-12.07	-2.63	-0.04
322	SLU 11	72	15	4281	-12.52	-2.96	-0.04
322	SLU 12	61	15	4227	-12.53	-3.34	-0.04
322	SLU 13	49	15	4166	-12.41	-3.77	-0.04
322	SLU 14	52	16	4371	-12.85	-4.1	-0.04
322	SLU 15	41	16	4317	-12.87	-4.48	-0.04
322	SLU 16	47	16	4346	-12.72	-4.28	-0.04
322	SLU 17	36	16	4292	-12.73	-4.66	-0.04
322	SLU 18	85	15	4364	-12.59	-2.43	-0.04
322	SLU 19	74	15	4310	-12.6	-2.8	-0.04
322	SLU 20	65	16	4454	-12.93	-3.57	-0.04
322	SLU 21	54	16	4400	-12.94	-3.94	-0.04

Nodo	Cont.	Reazione a traslazione			Reazione a rotazione		
Ind.	N.br.	x	y	z	x	y	z
322	SLU 22	87	15	4137	-12.15	-2.05	-0.04
322	SLU 23	69	15	4047	-12.17	-2.67	-0.04
322	SLU 24	72	15	4252	-12.62	-3.01	-0.04
322	SLU 25	61	15	4198	-12.63	-3.38	-0.04
322	SLU 26	49	15	4137	-12.5	-3.81	-0.04
322	SLU 27	51	16	4343	-12.95	-4.15	-0.04
322	SLU 28	40	16	4289	-12.96	-4.52	-0.04
322	SLU 29	46	16	4318	-12.81	-4.33	-0.04
322	SLU 30	35	16	4264	-12.82	-4.7	-0.04
322	SLU 31	63	16	4510	-13.43	-3.67	-0.04
322	SLU 32	65	17	4715	-13.87	-4.01	-0.04
322	SLU 33	54	17	4661	-13.89	-4.38	-0.04
322	SLU 34	42	17	4600	-13.76	-4.81	-0.04
322	SLU 35	45	17	4805	-14.21	-5.15	-0.04
322	SLU 36	34	17	4751	-14.22	-5.52	-0.04
322	SLU 37	40	17	4781	-14.07	-5.33	-0.04
322	SLU 38	29	17	4727	-14.08	-5.7	-0.04
322	SLU 39	78	17	4798	-13.95	-3.47	-0.04
322	SLU 40	67	17	4744	-13.96	-3.85	-0.04
322	SLU 41	57	18	4889	-14.28	-4.61	-0.04
322	SLU 42	47	18	4835	-14.29	-4.99	-0.04
322	SLU 43	125	17	4664	-13.57	-0.95	-0.04
322	SLU 44	107	17	4574	-13.59	-1.57	-0.04
322	SLU 45	109	17	4780	-14.04	-1.91	-0.04
322	SLU 46	98	17	4725	-14.05	-2.28	-0.04
322	SLU 47	86	17	4665	-13.92	-2.71	-0.04
322	SLU 48	89	18	4870	-14.37	-3.05	-0.04
322	SLU 49	78	18	4816	-14.38	-3.42	-0.04
322	SLU 50	84	18	4845	-14.24	-3.23	-0.04
322	SLU 51	73	17	4791	-14.25	-3.6	-0.04
322	SLU 52	100	18	5037	-14.85	-2.57	-0.04
322	SLU 53	103	19	5242	-15.3	-2.91	-0.05
322	SLU 54	92	19	5188	-15.31	-3.28	-0.05
322	SLU 55	80	19	5128	-15.18	-3.71	-0.04
322	SLU 56	82	19	5333	-15.63	-4.05	-0.05
322	SLU 57	72	19	5279	-15.64	-4.42	-0.05
322	SLU 58	77	19	5308	-15.49	-4.23	-0.05
322	SLU 59	67	19	5254	-15.51	-4.6	-0.05
322	SLU 60	115	19	5326	-15.37	-2.37	-0.05
322	SLU 61	105	19	5272	-15.38	-2.75	-0.05
322	SLU 62	95	19	5416	-15.7	-3.51	-0.05
322	SLU 63	84	19	5362	-15.71	-3.89	-0.05
322	SLU 64	118	18	5099	-14.93	-1.99	-0.04
322	SLU 65	100	18	5009	-14.94	-2.61	-0.04
322	SLU 66	102	19	5214	-15.39	-2.95	-0.05
322	SLU 67	91	19	5160	-15.4	-3.32	-0.05
322	SLU 68	79	19	5099	-15.28	-3.75	-0.05
322	SLU 69	82	19	5304	-15.72	-4.09	-0.05
322	SLU 70	71	19	5250	-15.74	-4.46	-0.05
322	SLU 71	77	19	5280	-15.59	-4.27	-0.05
322	SLU 72	66	19	5226	-15.6	-4.64	-0.05
322	SLU 73	93	20	5472	-16.2	-3.61	-0.05
322	SLU 74	96	20	5677	-16.65	-3.95	-0.05
322	SLU 75	85	20	5623	-16.66	-4.32	-0.05
322	SLU 76	73	20	5562	-16.53	-4.75	-0.05
322	SLU 77	75	21	5767	-16.98	-5.09	-0.05
322	SLU 78	65	21	5713	-16.99	-5.46	-0.05
322	SLU 79	70	21	5742	-16.85	-5.27	-0.05
322	SLU 80	60	21	5688	-16.86	-5.64	-0.05
322	SLU 81	108	20	5760	-16.72	-3.42	-0.05
322	SLU 82	98	20	5706	-16.73	-3.79	-0.05
322	SLU 83	88	21	5851	-17.05	-4.56	-0.05
322	SLU 84	77	21	5796	-17.06	-4.93	-0.05
322	SLE RA 1	92	14	3827	-11.18	-1.3	-0.03
322	SLE RA 2	80	14	3767	-11.2	-1.72	-0.03
322	SLE RA 3	82	14	3904	-11.5	-1.94	-0.03
322	SLE RA 4	75	14	3867	-11.5	-2.19	-0.03
322	SLE RA 5	66	14	3827	-11.42	-2.48	-0.03
322	SLE RA 6	68	14	3964	-11.72	-2.7	-0.03
322	SLE RA 7	61	14	3928	-11.72	-2.95	-0.03
322	SLE RA 8	65	14	3947	-11.63	-2.82	-0.03
322	SLE RA 9	58	14	3911	-11.63	-3.07	-0.03
322	SLE RA 10	76	15	4075	-12.03	-2.38	-0.04
322	SLE RA 11	77	15	4212	-12.33	-2.61	-0.04
322	SLE RA 12	70	15	4176	-12.34	-2.86	-0.04
322	SLE RA 13	62	15	4135	-12.26	-3.14	-0.04
322	SLE RA 14	64	15	4272	-12.55	-3.37	-0.04
322	SLE RA 15	57	15	4236	-12.56	-3.62	-0.04
322	SLE RA 16	61	15	4256	-12.46	-3.49	-0.04
322	SLE RA 17	53	15	4220	-12.47	-3.74	-0.04
322	SLE RA 18	86	15	4268	-12.38	-2.25	-0.04
322	SLE RA 19	79	15	4232	-12.39	-2.5	-0.04
322	SLE RA 20	72	15	4328	-12.6	-3.01	-0.04
322	SLE RA 21	65	15	4292	-12.61	-3.26	-0.04
322	SLE FR 1	92	14	3827	-11.18	-1.3	-0.03
322	SLE FR 2	90	14	3815	-11.19	-1.38	-0.03
322	SLE FR 3	87	14	3851	-11.27	-1.6	-0.03
322	SLE FR 4	88	14	3947	-11.55	-1.67	-0.03
322	SLE FR 5	85	14	3983	-11.63	-1.89	-0.03
322	SLE FR 6	89	14	4047	-11.78	-1.78	-0.03

Nodo	Cont.	Reazione a traslazione			Reazione a rotazione		
Ind.	N.br.	x	y	z	x	y	z
322	SLE QP 1	92	14	3827	-11.18	-1.3	-0.03
322	SLE QP 2	90	14	3959	-11.54	-1.59	-0.03
322	SLD 1	557	-3	2837	5.22	21.52	0.02
322	SLD 2	557	-3	2837	5.22	21.52	0.02
322	SLD 3	723	12	3366	-12.88	28.84	-0.04
322	SLD 4	723	12	3366	-12.88	28.84	-0.04
322	SLD 5	-21	-14	2820	20.94	-5.75	0.06
322	SLD 6	-21	-14	2820	20.94	-5.75	0.06
322	SLD 7	532	37	4583	-39.4	18.64	-0.12
322	SLD 8	532	37	4583	-39.4	18.64	-0.12
322	SLD 9	-351	-8	3335	16.31	-21.81	0.05
322	SLD 10	-351	-8	3335	16.31	-21.81	0.05
322	SLD 11	202	43	5098	-44.03	2.58	-0.13
322	SLD 12	202	43	5098	-44.03	2.58	-0.13
322	SLD 13	-543	16	4552	-10.2	-32.01	-0.03
322	SLD 14	-543	16	4552	-10.2	-32.01	-0.03
322	SLD 15	-377	32	5081	-28.3	-24.7	-0.08
322	SLD 16	-377	32	5081	-28.3	-24.7	-0.08
322	SLV 1	1173	-29	1325	30.29	52.1	0.09
322	SLV 2	1173	-29	1325	30.29	52.1	0.09
322	SLV 3	1575	9	2578	-15.39	69.78	-0.04
322	SLV 4	1575	9	2578	-15.39	69.78	-0.04
322	SLV 5	-196	-57	1269	70.3	-12.29	0.21
322	SLV 6	-196	-57	1269	70.3	-12.29	0.21
322	SLV 7	1146	71	5444	-81.99	46.64	-0.24
322	SLV 8	1146	71	5444	-81.99	46.64	-0.24
322	SLV 9	-966	-42	2474	58.9	-49.81	0.17
322	SLV 10	-966	-42	2474	58.9	-49.81	0.17
322	SLV 11	376	85	6649	-93.38	9.12	-0.28
322	SLV 12	376	85	6649	-93.38	9.12	-0.28
322	SLV 13	-1395	19	5340	-7.69	-72.95	-0.02
322	SLV 14	-1395	19	5340	-7.69	-72.95	-0.02
322	SLV 15	-993	58	6593	-53.38	-55.28	-0.16
322	SLV 16	-993	58	6593	-53.38	-55.28	-0.16
323	SLU 1	80	8	4332	-6.28	1.83	0
323	SLU 2	60	8	4209	-6.35	1.07	0
323	SLU 3	68	8	4486	-6.55	1.08	0
323	SLU 4	56	8	4412	-6.59	0.63	0
323	SLU 5	43	8	4332	-6.54	0.09	0
323	SLU 6	50	9	4610	-6.73	0.09	0
323	SLU 7	38	9	4535	-6.78	-0.36	0
323	SLU 8	45	8	4580	-6.65	-0.15	0
323	SLU 9	33	8	4505	-6.69	-0.6	0
323	SLU 10	49	9	4743	-7.05	0.44	0
323	SLU 11	57	9	5021	-7.24	0.44	0
323	SLU 12	45	9	4946	-7.28	-0.01	0
323	SLU 13	32	9	4867	-7.23	-0.55	0
323	SLU 14	40	9	5144	-7.43	-0.55	0
323	SLU 15	27	9	5070	-7.47	-1	0
323	SLU 16	34	9	5114	-7.34	-0.79	0
323	SLU 17	22	9	5040	-7.39	-1.24	0
323	SLU 18	65	9	5096	-7.27	0.91	0
323	SLU 19	53	9	5022	-7.31	0.46	0
323	SLU 20	47	9	5220	-7.45	-0.07	0
323	SLU 21	35	9	5146	-7.5	-0.52	0
323	SLU 22	72	9	4847	-7.04	1.24	0
323	SLU 23	52	9	4723	-7.12	0.49	0
323	SLU 24	60	9	5001	-7.31	0.49	0
323	SLU 25	48	9	4926	-7.35	0.04	0
323	SLU 26	34	9	4847	-7.3	-0.5	0
323	SLU 27	42	9	5124	-7.5	-0.5	0
323	SLU 28	30	9	5050	-7.54	-0.95	0
323	SLU 29	37	9	5094	-7.41	-0.74	0
323	SLU 30	25	9	5020	-7.46	-1.19	0
323	SLU 31	41	10	5258	-7.81	-0.15	0
323	SLU 32	49	10	5535	-8	-0.15	0
323	SLU 33	37	10	5461	-8.05	-0.6	0
323	SLU 34	24	10	5382	-7.99	-1.14	-0.01
323	SLU 35	31	10	5659	-8.19	-1.14	0
323	SLU 36	19	10	5585	-8.23	-1.59	-0.01
323	SLU 37	26	10	5629	-8.1	-1.38	0
323	SLU 38	14	10	5555	-8.15	-1.83	-0.01
323	SLU 39	57	10	5611	-8.03	0.33	0
323	SLU 40	45	10	5537	-8.07	-0.13	0
323	SLU 41	39	10	5734	-8.21	-0.66	0
323	SLU 42	27	10	5660	-8.26	-1.11	-0.01
323	SLU 43	107	10	5455	-7.9	2.58	0
323	SLU 44	87	10	5332	-7.98	1.82	0
323	SLU 45	95	10	5609	-8.17	1.83	0
323	SLU 46	83	10	5535	-8.22	1.38	0
323	SLU 47	70	10	5455	-8.16	0.84	0
323	SLU 48	77	11	5733	-8.36	0.84	0
323	SLU 49	65	11	5659	-8.4	0.39	0
323	SLU 50	72	11	5703	-8.27	0.6	0
323	SLU 51	60	11	5629	-8.32	0.15	0
323	SLU 52	76	11	5866	-8.67	1.19	0
323	SLU 53	84	11	6144	-8.86	1.19	0
323	SLU 54	72	11	6070	-8.91	0.74	0
323	SLU 55	59	11	5990	-8.85	0.2	-0.01
323	SLU 56	66	11	6267	-9.05	0.2	0

Nodo	Cont.	Reazione a traslazione			Reazione a rotazione		
Ind.	N.br.	x	y	z	x	y	z
323	SLU 57	54	11	6193	-9.09	-0.25	-0.01
323	SLU 58	61	11	6237	-8.96	-0.04	0
323	SLU 59	49	11	6163	-9.01	-0.49	0
323	SLU 60	92	11	6219	-8.89	1.66	0
323	SLU 61	80	11	6145	-8.94	1.21	0
323	SLU 62	74	11	6343	-9.08	0.68	0
323	SLU 63	62	11	6269	-9.12	0.23	0
323	SLU 64	99	11	5970	-8.67	1.99	0
323	SLU 65	79	11	5846	-8.74	1.24	0
323	SLU 66	87	11	6124	-8.93	1.24	0
323	SLU 67	75	11	6050	-8.98	0.79	0
323	SLU 68	61	11	5970	-8.92	0.25	-0.01
323	SLU 69	69	12	6247	-9.12	0.25	0
323	SLU 70	57	12	6173	-9.16	-0.2	-0.01
323	SLU 71	64	11	6218	-9.03	0.01	0
323	SLU 72	52	11	6143	-9.08	-0.44	-0.01
323	SLU 73	68	12	6381	-9.43	0.6	-0.01
323	SLU 74	76	12	6658	-9.63	0.6	0
323	SLU 75	64	12	6584	-9.67	0.15	-0.01
323	SLU 76	51	12	6505	-9.61	-0.39	-0.01
323	SLU 77	58	12	6782	-9.81	-0.39	-0.01
323	SLU 78	46	12	6708	-9.85	-0.84	-0.01
323	SLU 79	53	12	6752	-9.73	-0.63	0
323	SLU 80	41	12	6678	-9.77	-1.08	-0.01
323	SLU 81	84	12	6734	-9.65	1.07	0
323	SLU 82	72	12	6660	-9.7	0.62	-0.01
323	SLU 83	66	12	6858	-9.84	0.09	0
323	SLU 84	54	12	6783	-9.88	-0.36	-0.01
323	SLE RA 1	78	8	4479	-6.5	1.66	0
323	SLE RA 2	65	8	4397	-6.55	1.16	0
323	SLE RA 3	70	9	4582	-6.68	1.16	0
323	SLE RA 4	62	9	4532	-6.71	0.86	0
323	SLE RA 5	53	8	4479	-6.67	0.5	0
323	SLE RA 6	58	9	4664	-6.8	0.5	0
323	SLE RA 7	50	9	4615	-6.83	0.2	0
323	SLE RA 8	54	9	4644	-6.74	0.34	0
323	SLE RA 9	46	9	4595	-6.77	0.04	0
323	SLE RA 10	57	9	4753	-7.01	0.73	0
323	SLE RA 11	63	9	4938	-7.14	0.73	0
323	SLE RA 12	55	9	4889	-7.17	0.43	0
323	SLE RA 13	46	9	4836	-7.13	0.07	0
323	SLE RA 14	51	9	5021	-7.26	0.08	0
323	SLE RA 15	43	9	4971	-7.29	-0.22	0
323	SLE RA 16	47	9	5001	-7.21	-0.08	0
323	SLE RA 17	39	9	4951	-7.23	-0.38	0
323	SLE RA 18	68	9	4988	-7.16	1.05	0
323	SLE RA 19	60	9	4939	-7.19	0.75	0
323	SLE RA 20	56	9	5071	-7.28	0.39	0
323	SLE RA 21	48	9	5021	-7.31	0.09	0
323	SLE FR 1	78	8	4479	-6.5	1.66	0
323	SLE FR 2	75	8	4463	-6.51	1.56	0
323	SLE FR 3	73	8	4512	-6.55	1.39	0
323	SLE FR 4	72	9	4616	-6.71	1.38	0
323	SLE FR 5	70	9	4665	-6.75	1.21	0
323	SLE FR 6	73	9	4734	-6.83	1.35	0
323	SLE QP 1	78	8	4479	-6.5	1.66	0
323	SLE QP 2	75	9	4632	-6.7	1.48	0
323	SLD 1	495	-7	3059	-6.59	22.81	0
323	SLD 2	495	-7	3059	-6.59	22.81	0
323	SLD 3	660	2	3734	5.44	30.49	0.03
323	SLD 4	660	2	3734	5.44	30.49	0.03
323	SLD 5	-49	-9	3136	-24.9	-3.78	-0.06
323	SLD 6	-49	-9	3136	-24.9	-3.78	-0.06
323	SLD 7	501	20	5387	15.18	21.83	0.07
323	SLD 8	501	20	5387	15.18	21.83	0.07
323	SLD 9	-351	-3	3877	-28.57	-18.88	-0.07
323	SLD 10	-351	-3	3877	-28.57	-18.88	-0.07
323	SLD 11	199	26	6128	11.51	6.73	0.06
323	SLD 12	199	26	6128	11.51	6.73	0.06
323	SLD 13	-510	15	5530	-18.83	-27.54	-0.04
323	SLD 14	-510	15	5530	-18.83	-27.54	-0.04
323	SLD 15	-345	24	6205	-6.81	-19.85	0
323	SLD 16	-345	24	6205	-6.81	-19.85	0
323	SLV 1	1045	-28	942	-6.74	50.89	-0.01
323	SLV 2	1045	-28	942	-6.74	50.89	-0.01
323	SLV 3	1449	-6	2533	23.59	69.66	0.09
323	SLV 4	1449	-6	2533	23.59	69.66	0.09
323	SLV 5	-246	-36	1112	-52.71	-12.16	-0.15
323	SLV 6	-246	-36	1112	-52.71	-12.16	-0.15
323	SLV 7	1099	37	6416	48.39	50.39	0.17
323	SLV 8	1099	37	6416	48.39	50.39	0.17
323	SLV 9	-949	-20	2848	-61.78	-47.44	-0.18
323	SLV 10	-949	-20	2848	-61.78	-47.44	-0.18
323	SLV 11	396	53	8152	39.32	15.11	0.15
323	SLV 12	396	53	8152	39.32	15.11	0.15
323	SLV 13	-1299	23	6731	-36.98	-66.71	-0.1
323	SLV 14	-1299	23	6731	-36.98	-66.71	-0.1
323	SLV 15	-896	45	8322	-6.65	-47.94	0
323	SLV 16	-896	45	8322	-6.65	-47.94	0
324	SLU 1	-196	11	5114	-4.73	-16.58	1.23

Nodo	Cont.	Reazione a traslazione			Reazione a rotazione		
Ind.	N.br.	x	y	z	x	y	z
324	SLU 2	-211	10	4944	-4.72	-16.9	1.17
324	SLU 3	-216	11	5317	-4.9	-17.96	1.28
324	SLU 4	-226	10	5215	-4.89	-18.15	1.24
324	SLU 5	-235	10	5110	-4.83	-18.37	1.21
324	SLU 6	-241	11	5484	-5.01	-19.43	1.31
324	SLU 7	-250	10	5382	-5	-19.62	1.28
324	SLU 8	-244	11	5448	-4.95	-19.52	1.3
324	SLU 9	-253	10	5346	-4.94	-19.71	1.26
324	SLU 10	-258	11	5570	-5.18	-20.1	1.31
324	SLU 11	-264	11	5944	-5.36	-21.16	1.42
324	SLU 12	-273	11	5841	-5.35	-21.35	1.38
324	SLU 13	-283	11	5737	-5.29	-21.57	1.35
324	SLU 14	-288	11	6111	-5.47	-22.63	1.45
324	SLU 15	-297	11	6008	-5.46	-22.82	1.41
324	SLU 16	-291	11	6074	-5.41	-22.72	1.44
324	SLU 17	-301	11	5972	-5.4	-22.91	1.4
324	SLU 18	-264	12	6009	-5.39	-21.16	1.43
324	SLU 19	-273	11	5907	-5.38	-21.35	1.4
324	SLU 20	-288	12	6176	-5.5	-22.63	1.46
324	SLU 21	-297	11	6074	-5.49	-22.82	1.43
324	SLU 22	-238	11	5731	-5.24	-19.58	1.37
324	SLU 23	-253	11	5561	-5.23	-19.9	1.32
324	SLU 24	-259	12	5934	-5.4	-20.95	1.42
324	SLU 25	-268	11	5832	-5.4	-21.14	1.38
324	SLU 26	-277	11	5727	-5.33	-21.37	1.35
324	SLU 27	-283	12	6101	-5.51	-22.42	1.45
324	SLU 28	-292	11	5999	-5.5	-22.61	1.42
324	SLU 29	-286	11	6065	-5.45	-22.52	1.44
324	SLU 30	-295	11	5962	-5.44	-22.71	1.4
324	SLU 31	-301	11	6187	-5.68	-23.1	1.45
324	SLU 32	-306	12	6561	-5.86	-24.15	1.56
324	SLU 33	-315	12	6458	-5.85	-24.34	1.52
324	SLU 34	-325	11	6354	-5.79	-24.57	1.49
324	SLU 35	-330	12	6728	-5.97	-25.62	1.59
324	SLU 36	-340	12	6625	-5.96	-25.81	1.56
324	SLU 37	-334	12	6691	-5.91	-25.72	1.58
324	SLU 38	-343	12	6589	-5.9	-25.91	1.54
324	SLU 39	-306	12	6626	-5.89	-24.15	1.57
324	SLU 40	-315	12	6524	-5.89	-24.34	1.54
324	SLU 41	-330	12	6793	-6	-25.62	1.6
324	SLU 42	-339	12	6691	-5.99	-25.81	1.57
324	SLU 43	-240	13	6437	-5.98	-20.53	1.55
324	SLU 44	-255	13	6266	-5.97	-20.85	1.5
324	SLU 45	-261	14	6640	-6.15	-21.91	1.6
324	SLU 46	-270	13	6538	-6.14	-22.1	1.56
324	SLU 47	-279	13	6433	-6.08	-22.32	1.53
324	SLU 48	-285	14	6807	-6.25	-23.38	1.63
324	SLU 49	-294	13	6705	-6.25	-23.57	1.6
324	SLU 50	-288	13	6771	-6.2	-23.47	1.62
324	SLU 51	-297	13	6668	-6.19	-23.66	1.59
324	SLU 52	-303	14	6893	-6.43	-24.05	1.63
324	SLU 53	-308	14	7267	-6.61	-25.11	1.74
324	SLU 54	-317	14	7164	-6.6	-25.3	1.7
324	SLU 55	-327	14	7060	-6.54	-25.52	1.67
324	SLU 56	-332	14	7433	-6.71	-26.58	1.77
324	SLU 57	-341	14	7331	-6.71	-26.77	1.74
324	SLU 58	-336	14	7397	-6.65	-26.67	1.76
324	SLU 59	-345	14	7295	-6.65	-26.86	1.72
324	SLU 60	-308	14	7332	-6.64	-25.11	1.75
324	SLU 61	-317	14	7230	-6.63	-25.3	1.72
324	SLU 62	-332	14	7499	-6.74	-26.57	1.79
324	SLU 63	-341	14	7396	-6.74	-26.77	1.75
324	SLU 64	-282	14	7054	-6.48	-23.53	1.69
324	SLU 65	-297	14	6883	-6.47	-23.85	1.64
324	SLU 66	-303	14	7257	-6.65	-24.9	1.74
324	SLU 67	-312	14	7155	-6.64	-25.09	1.7
324	SLU 68	-321	14	7050	-6.58	-25.31	1.67
324	SLU 69	-327	14	7424	-6.76	-26.37	1.77
324	SLU 70	-336	14	7321	-6.75	-26.56	1.74
324	SLU 71	-330	14	7388	-6.7	-26.47	1.76
324	SLU 72	-339	14	7285	-6.69	-26.66	1.73
324	SLU 73	-345	14	7510	-6.93	-27.05	1.78
324	SLU 74	-351	15	7884	-7.11	-28.1	1.88
324	SLU 75	-360	15	7781	-7.1	-28.29	1.84
324	SLU 76	-369	14	7677	-7.04	-28.52	1.81
324	SLU 77	-375	15	8050	-7.22	-29.57	1.91
324	SLU 78	-384	15	7948	-7.21	-29.76	1.88
324	SLU 79	-378	15	8014	-7.16	-29.67	1.9
324	SLU 80	-387	15	7912	-7.15	-29.86	1.87
324	SLU 81	-350	15	7949	-7.14	-28.1	1.89
324	SLU 82	-359	15	7847	-7.13	-28.29	1.86
324	SLU 83	-374	15	8116	-7.25	-29.57	1.93
324	SLU 84	-383	15	8013	-7.24	-29.76	1.89
324	SLE RA 1	-208	11	5291	-4.88	-17.44	1.27
324	SLE RA 2	-218	10	5177	-4.87	-17.65	1.23
324	SLE RA 3	-222	11	5426	-4.99	-18.36	1.3
324	SLE RA 4	-228	11	5358	-4.98	-18.48	1.28
324	SLE RA 5	-234	10	5288	-4.94	-18.63	1.26
324	SLE RA 6	-238	11	5537	-5.06	-19.34	1.32
324	SLE RA 7	-244	11	5469	-5.05	-19.46	1.3

Nodo	Cont.	Reazione a traslazione			Reazione a rotazione		
Ind.	N.br.	x	y	z	x	y	z
324	SLE RA 8	-240	11	5513	-5.02	-19.4	1.32
324	SLE RA 9	-246	11	5445	-5.02	-19.53	1.29
324	SLE RA 10	-250	11	5594	-5.18	-19.79	1.33
324	SLE RA 11	-253	11	5844	-5.29	-20.49	1.39
324	SLE RA 12	-259	11	5775	-5.29	-20.62	1.37
324	SLE RA 13	-266	11	5706	-5.25	-20.77	1.35
324	SLE RA 14	-269	11	5955	-5.37	-21.47	1.42
324	SLE RA 15	-275	11	5887	-5.36	-21.6	1.39
324	SLE RA 16	-272	11	5931	-5.33	-21.53	1.41
324	SLE RA 17	-278	11	5862	-5.32	-21.66	1.39
324	SLE RA 18	-253	11	5887	-5.32	-20.49	1.4
324	SLE RA 19	-259	11	5819	-5.31	-20.62	1.38
324	SLE RA 20	-269	11	5998	-5.39	-21.47	1.43
324	SLE RA 21	-275	11	5930	-5.38	-21.59	1.4
324	SLE FR 1	-208	11	5291	-4.88	-17.44	1.27
324	SLE FR 2	-210	11	5268	-4.88	-17.48	1.26
324	SLE FR 3	-214	11	5335	-4.91	-17.83	1.28
324	SLE FR 4	-223	11	5447	-5.01	-18.4	1.3
324	SLE FR 5	-228	11	5514	-5.04	-18.75	1.32
324	SLE FR 6	-231	11	5589	-5.1	-18.96	1.34
324	SLE QP 1	-208	11	5291	-4.88	-17.44	1.27
324	SLE QP 2	-221	11	5470	-5.01	-18.35	1.31
324	SLD 1	231	19	3269	2.11	12.75	0.88
324	SLD 2	231	19	3269	2.11	12.75	0.88
324	SLD 3	357	25	4178	-4.14	5.95	1.12
324	SLD 4	357	25	4178	-4.14	5.95	1.12
324	SLD 5	-276	4	3431	6.61	1.3	0.8
324	SLD 6	-276	4	3431	6.61	1.3	0.8
324	SLD 7	143	25	6461	-14.23	-21.39	1.63
324	SLD 8	143	25	6461	-14.23	-21.39	1.63
324	SLD 9	-586	-3	4478	4.21	-15.32	0.99
324	SLD 10	-586	-3	4478	4.21	-15.32	0.99
324	SLD 11	-167	18	7508	-16.63	-38.01	1.82
324	SLD 12	-167	18	7508	-16.63	-38.01	1.82
324	SLD 13	-800	-3	6761	-5.88	-42.66	1.5
324	SLD 14	-800	-3	6761	-5.88	-42.66	1.5
324	SLD 15	-674	3	7670	-12.13	-49.46	1.75
324	SLD 16	-674	3	7670	-12.13	-49.46	1.75
324	SLV 1	830	30	305	12.67	54.63	0.29
324	SLV 2	830	30	305	12.67	54.63	0.29
324	SLV 3	1136	46	2451	-3.08	38.08	0.87
324	SLV 4	1136	46	2451	-3.08	38.08	0.87
324	SLV 5	-369	-7	665	24.18	28.64	0.12
324	SLV 6	-369	-7	665	24.18	28.64	0.12
324	SLV 7	649	45	7820	-28.32	-26.52	2.06
324	SLV 8	649	45	7820	-28.32	-26.52	2.06
324	SLV 9	-1092	-23	3120	18.3	-10.19	0.56
324	SLV 10	-1092	-23	3120	18.3	-10.19	0.56
324	SLV 11	-74	29	10274	-34.2	-65.35	2.5
324	SLV 12	-74	29	10274	-34.2	-65.35	2.5
324	SLV 13	-1579	-24	8488	-6.94	-74.79	1.75
324	SLV 14	-1579	-24	8488	-6.94	-74.79	1.75
324	SLV 15	-1273	-8	10634	-22.68	-91.34	2.33
324	SLV 16	-1273	-8	10634	-22.68	-91.34	2.33
325	SLU 1	-674	-865	8140	55.45	-15.49	2.29
325	SLU 2	-660	-809	7825	51.84	-15.41	2.22
325	SLU 3	-709	-895	8488	57.52	-16.52	2.4
325	SLU 4	-701	-862	8299	55.35	-16.47	2.36
325	SLU 5	-693	-830	8114	53.36	-16.45	2.32
325	SLU 6	-741	-916	8777	59.03	-17.56	2.5
325	SLU 7	-733	-882	8588	56.87	-17.51	2.45
325	SLU 8	-739	-906	8718	58.48	-17.57	2.48
325	SLU 9	-731	-873	8529	56.32	-17.52	2.44
325	SLU 10	-755	-911	8824	58.48	-17.87	2.53
325	SLU 11	-803	-997	9488	64.15	-18.97	2.7
325	SLU 12	-795	-963	9298	61.98	-18.93	2.66
325	SLU 13	-787	-931	9114	59.99	-18.91	2.62
325	SLU 14	-836	-1017	9777	65.66	-20.02	2.8
325	SLU 15	-828	-984	9587	63.5	-19.97	2.76
325	SLU 16	-833	-1008	9718	65.11	-20.03	2.79
325	SLU 17	-825	-974	9529	62.95	-19.98	2.75
325	SLU 18	-809	-1010	9568	64.92	-19	2.73
325	SLU 19	-801	-977	9379	62.76	-18.95	2.68
325	SLU 20	-841	-1031	9857	66.44	-20.04	2.82
325	SLU 21	-833	-997	9668	64.27	-19.99	2.78
325	SLU 22	-766	-968	9138	62.13	-17.85	2.59
325	SLU 23	-752	-912	8823	58.53	-17.77	2.52
325	SLU 24	-801	-998	9486	64.2	-18.88	2.7
325	SLU 25	-792	-964	9297	62.04	-18.83	2.66
325	SLU 26	-784	-933	9112	60.04	-18.81	2.62
325	SLU 27	-833	-1019	9775	65.71	-19.92	2.8
325	SLU 28	-825	-985	9586	63.55	-19.87	2.76
325	SLU 29	-831	-1009	9716	65.16	-19.93	2.79
325	SLU 30	-823	-976	9527	63	-19.88	2.74
325	SLU 31	-846	-1014	9823	65.16	-20.23	2.83
325	SLU 32	-895	-1100	10486	70.83	-21.34	3.01
325	SLU 33	-887	-1066	10297	68.67	-21.29	2.96
325	SLU 34	-879	-1034	10112	66.67	-21.27	2.93
325	SLU 35	-928	-1120	10775	72.34	-22.38	3.1
325	SLU 36	-920	-1087	10586	70.18	-22.33	3.06

Nodo	Cont.	Reazione a traslazione			Reazione a rotazione		
Ind.	N.br.	x	y	z	x	y	z
325	SLU 37	-925	-1111	10716	71.79	-22.39	3.09
325	SLU 38	-917	-1077	10527	69.63	-22.34	3.05
325	SLU 39	-901	-1113	10566	71.6	-21.36	3.03
325	SLU 40	-892	-1079	10377	69.44	-21.31	2.99
325	SLU 41	-933	-1134	10856	73.12	-22.4	3.13
325	SLU 42	-925	-1100	10666	70.96	-22.35	3.08
325	SLU 43	-844	-1089	10240	69.79	-19.32	2.87
325	SLU 44	-831	-1033	9924	66.19	-19.25	2.8
325	SLU 45	-879	-1119	10587	71.86	-20.35	2.98
325	SLU 46	-871	-1086	10398	69.7	-20.31	2.94
325	SLU 47	-863	-1054	10213	67.7	-20.29	2.9
325	SLU 48	-912	-1140	10877	73.37	-21.39	3.08
325	SLU 49	-904	-1107	10687	71.21	-21.35	3.04
325	SLU 50	-910	-1130	10818	72.82	-21.41	3.07
325	SLU 51	-901	-1097	10629	70.66	-21.36	3.03
325	SLU 52	-925	-1135	10924	72.82	-21.7	3.11
325	SLU 53	-974	-1221	11587	78.49	-22.81	3.29
325	SLU 54	-966	-1187	11398	76.33	-22.77	3.25
325	SLU 55	-958	-1156	11213	74.33	-22.75	3.21
325	SLU 56	-1007	-1242	11876	80	-23.85	3.39
325	SLU 57	-998	-1208	11687	77.84	-23.81	3.35
325	SLU 58	-1004	-1232	11817	79.45	-23.86	3.37
325	SLU 59	-996	-1199	11628	77.29	-23.82	3.33
325	SLU 60	-979	-1234	11668	79.26	-22.83	3.31
325	SLU 61	-971	-1201	11479	77.1	-22.79	3.27
325	SLU 62	-1012	-1255	11957	80.78	-23.88	3.41
325	SLU 63	-1004	-1221	11768	78.62	-23.83	3.37
325	SLU 64	-936	-1192	11238	76.47	-21.68	3.17
325	SLU 65	-923	-1136	10923	72.87	-21.61	3.1
325	SLU 66	-971	-1222	11586	78.54	-22.71	3.28
325	SLU 67	-963	-1189	11397	76.38	-22.67	3.24
325	SLU 68	-955	-1157	11212	74.38	-22.65	3.2
325	SLU 69	-1004	-1243	11875	80.06	-23.76	3.38
325	SLU 70	-996	-1209	11686	77.89	-23.71	3.34
325	SLU 71	-1001	-1233	11816	79.5	-23.77	3.37
325	SLU 72	-993	-1200	11627	77.34	-23.72	3.33
325	SLU 73	-1017	-1238	11922	79.5	-24.07	3.41
325	SLU 74	-1066	-1324	12586	85.17	-25.17	3.59
325	SLU 75	-1058	-1290	12396	83.01	-25.13	3.55
325	SLU 76	-1050	-1258	12212	81.02	-25.11	3.51
325	SLU 77	-1098	-1344	12875	86.69	-26.21	3.69
325	SLU 78	-1090	-1311	12685	84.53	-26.17	3.65
325	SLU 79	-1096	-1335	12816	86.13	-26.22	3.68
325	SLU 80	-1088	-1301	12627	83.97	-26.18	3.63
325	SLU 81	-1071	-1337	12666	85.94	-25.19	3.61
325	SLU 82	-1063	-1304	12477	83.78	-25.15	3.57
325	SLU 83	-1104	-1358	12955	87.46	-26.24	3.71
325	SLU 84	-1096	-1324	12766	85.3	-26.19	3.67
325	SLE RA 1	-700	-894	8425	57.36	-16.16	2.37
325	SLE RA 2	-691	-857	8215	54.95	-16.11	2.33
325	SLE RA 3	-723	-914	8657	58.73	-16.85	2.45
325	SLE RA 4	-718	-892	8531	57.29	-16.82	2.42
325	SLE RA 5	-713	-871	8408	55.96	-16.8	2.39
325	SLE RA 6	-745	-928	8850	59.75	-17.54	2.51
325	SLE RA 7	-740	-906	8724	58.3	-17.51	2.48
325	SLE RA 8	-743	-922	8811	59.38	-17.55	2.5
325	SLE RA 9	-738	-900	8684	57.94	-17.52	2.48
325	SLE RA 10	-754	-925	8882	59.37	-17.75	2.53
325	SLE RA 11	-786	-982	9324	63.16	-18.49	2.65
325	SLE RA 12	-781	-960	9197	61.71	-18.46	2.62
325	SLE RA 13	-776	-939	9074	60.39	-18.44	2.6
325	SLE RA 14	-808	-996	9516	64.17	-19.18	2.72
325	SLE RA 15	-803	-974	9390	62.72	-19.15	2.69
325	SLE RA 16	-806	-990	9477	63.8	-19.19	2.71
325	SLE RA 17	-801	-967	9351	62.36	-19.16	2.68
325	SLE RA 18	-790	-991	9377	63.67	-18.5	2.67
325	SLE RA 19	-785	-969	9251	62.23	-18.47	2.64
325	SLE RA 20	-812	-1005	9570	64.68	-19.2	2.73
325	SLE RA 21	-806	-983	9444	63.24	-19.17	2.7
325	SLE FR 1	-700	-894	8425	57.36	-16.16	2.37
325	SLE FR 2	-698	-887	8383	56.88	-16.15	2.36
325	SLE FR 3	-709	-900	8502	57.76	-16.44	2.4
325	SLE FR 4	-725	-916	8669	58.77	-16.85	2.45
325	SLE FR 5	-736	-929	8788	59.65	-17.14	2.49
325	SLE FR 6	-745	-943	8901	60.51	-17.33	2.52
325	SLE QP 1	-700	-894	8425	57.36	-16.16	2.37
325	SLE QP 2	-727	-923	8711	59.25	-16.86	2.46
325	SLD 1	-200	-612	4799	36.87	2.93	0.93
325	SLD 2	-200	-612	4799	36.87	2.93	0.93
325	SLD 3	-341	-823	6398	51.64	-1.68	1.42
325	SLD 4	-341	-823	6398	51.64	-1.68	1.42
325	SLD 5	-354	-510	5112	30.13	-3.93	1.26
325	SLD 6	-354	-510	5112	30.13	-3.93	1.26
325	SLD 7	-826	-1213	10442	79.37	-19.3	2.89
325	SLD 8	-826	-1213	10442	79.37	-19.3	2.89
325	SLD 9	-628	-633	6979	39.13	-14.42	2.03
325	SLD 10	-628	-633	6979	39.13	-14.42	2.03
325	SLD 11	-1100	-1337	12310	88.37	-29.79	3.66
325	SLD 12	-1100	-1337	12310	88.37	-29.79	3.66
325	SLD 13	-1113	-1024	11023	66.86	-32.04	3.5

Nodo	Cont.	Reazione a traslazione			Reazione a rotazione		
Ind.	N.br.	x	y	z	x	y	z
325	SLD 14	-1113	-1024	11023	66.86	-32.04	3.5
325	SLD 15	-1254	-1235	12623	81.64	-36.65	3.99
325	SLD 16	-1254	-1235	12623	81.64	-36.65	3.99
325	SLV 1	511	-194	-468	6.75	29.61	-1.12
325	SLV 2	511	-194	-468	6.75	29.61	-1.12
325	SLV 3	172	-689	3311	41.49	18.47	0.04
325	SLV 4	172	-689	3311	41.49	18.47	0.04
325	SLV 5	158	46	225	-9.19	13.97	-0.38
325	SLV 6	158	46	225	-9.19	13.97	-0.38
325	SLV 7	-971	-1603	12823	106.61	-23.15	3.5
325	SLV 8	-971	-1603	12823	106.61	-23.15	3.5
325	SLV 9	-483	-243	4599	11.89	-10.57	1.42
325	SLV 10	-483	-243	4599	11.89	-10.57	1.42
325	SLV 11	-1612	-1892	17196	127.69	-47.7	5.31
325	SLV 12	-1612	-1892	17196	127.69	-47.7	5.31
325	SLV 13	-1626	-1158	14111	77.01	-52.2	4.88
325	SLV 14	-1626	-1158	14111	77.01	-52.2	4.88
325	SLV 15	-1964	-1653	17890	111.75	-63.33	6.04
325	SLV 16	-1964	-1653	17890	111.75	-63.33	6.04
326	SLU 1	-1	-592	3856	23.9	0.24	0
326	SLU 2	-1	-591	3857	23.86	0.24	0
326	SLU 3	-1	-612	3967	24.66	0.25	0
326	SLU 4	-1	-611	3967	24.64	0.25	0
326	SLU 5	-1	-603	3925	24.3	0.25	0
326	SLU 6	-1	-623	4035	25.1	0.25	0
326	SLU 7	-1	-623	4036	25.08	0.25	0
326	SLU 8	-1	-615	3993	24.78	0.25	0
326	SLU 9	-1	-615	3993	24.76	0.25	0
326	SLU 10	-1	-676	4392	27.27	0.27	0
326	SLU 11	-1	-696	4502	28.07	0.27	0
326	SLU 12	-1	-696	4503	28.05	0.27	0
326	SLU 13	-1	-687	4461	27.71	0.27	0
326	SLU 14	-1	-708	4571	28.51	0.28	0
326	SLU 15	-1	-707	4571	28.49	0.28	0
326	SLU 16	-1	-700	4528	28.19	0.27	0
326	SLU 17	-1	-699	4529	28.17	0.27	0
326	SLU 18	-1	-713	4621	28.77	0.28	0
326	SLU 19	-1	-712	4621	28.75	0.28	0
326	SLU 20	-1	-724	4689	29.21	0.28	0
326	SLU 21	-1	-724	4690	29.19	0.28	0
326	SLU 22	-1	-675	4366	27.22	0.27	0
326	SLU 23	-1	-674	4367	27.19	0.27	0
326	SLU 24	-1	-695	4477	27.98	0.28	0
326	SLU 25	-1	-694	4477	27.96	0.28	0
326	SLU 26	-1	-686	4435	27.62	0.27	0
326	SLU 27	-1	-706	4545	28.42	0.28	0
326	SLU 28	-1	-705	4546	28.4	0.28	0
326	SLU 29	-1	-698	4503	28.1	0.27	0
326	SLU 30	-1	-697	4503	28.08	0.28	0
326	SLU 31	-1	-758	4902	30.59	0.3	0.01
326	SLU 32	-1	-779	5012	31.39	0.3	0.01
326	SLU 33	-1	-778	5013	31.37	0.3	0.01
326	SLU 34	-1	-770	4971	31.03	0.3	0.01
326	SLU 35	-1	-790	5081	31.83	0.3	0.01
326	SLU 36	-1	-790	5081	31.81	0.3	0.01
326	SLU 37	-1	-782	5038	31.51	0.3	0.01
326	SLU 38	-1	-782	5039	31.49	0.3	0.01
326	SLU 39	-1	-796	5131	32.09	0.3	0.01
326	SLU 40	-1	-795	5131	32.07	0.31	0.01
326	SLU 41	-1	-807	5199	32.53	0.31	0.01
326	SLU 42	-1	-806	5200	32.51	0.31	0.01
326	SLU 43	-1	-742	4838	29.93	0.3	0
326	SLU 44	-1	-741	4839	29.9	0.31	0
326	SLU 45	-1	-761	4949	30.69	0.31	0
326	SLU 46	-1	-761	4949	30.67	0.31	0
326	SLU 47	-1	-752	4907	30.34	0.31	0
326	SLU 48	-1	-773	5017	31.13	0.32	0.01
326	SLU 49	-1	-772	5018	31.11	0.32	0.01
326	SLU 50	-1	-765	4975	30.81	0.31	0.01
326	SLU 51	-1	-764	4975	30.79	0.31	0.01
326	SLU 52	-1	-825	5374	33.31	0.33	0.01
326	SLU 53	-1	-846	5484	34.1	0.34	0.01
326	SLU 54	-1	-845	5485	34.08	0.34	0.01
326	SLU 55	-1	-837	5443	33.74	0.33	0.01
326	SLU 56	-1	-857	5553	34.54	0.34	0.01
326	SLU 57	-1	-856	5553	34.52	0.34	0.01
326	SLU 58	-1	-849	5510	34.22	0.33	0.01
326	SLU 59	-1	-848	5511	34.2	0.34	0.01
326	SLU 60	-1	-862	5603	34.8	0.34	0.01
326	SLU 61	-1	-862	5603	34.78	0.34	0.01
326	SLU 62	-1	-874	5671	35.24	0.34	0.01
326	SLU 63	-1	-873	5672	35.22	0.34	0.01
326	SLU 64	-1	-824	5348	33.26	0.33	0.01
326	SLU 65	-1	-824	5348	33.22	0.33	0.01
326	SLU 66	-1	-844	5459	34.01	0.34	0.01
326	SLU 67	-1	-843	5459	33.99	0.34	0.01
326	SLU 68	-1	-835	5417	33.66	0.34	0.01
326	SLU 69	-1	-855	5527	34.45	0.34	0.01
326	SLU 70	-1	-855	5528	34.43	0.34	0.01
326	SLU 71	-1	-847	5485	34.13	0.34	0.01

Nodo	Cont.	Reazione a traslazione			Reazione a rotazione		
Ind.	N.br.	x	y	z	x	y	z
326	SLU 72	-1	-847	5485	34.11	0.34	0.01
326	SLU 73	-1	-908	5884	36.63	0.36	0.01
326	SLU 74	-1	-928	5994	37.42	0.36	0.01
326	SLU 75	-1	-928	5995	37.4	0.37	0.01
326	SLU 76	-1	-919	5953	37.07	0.36	0.01
326	SLU 77	-1	-940	6063	37.86	0.37	0.01
326	SLU 78	-1	-939	6063	37.84	0.37	0.01
326	SLU 79	-1	-932	6020	37.54	0.36	0.01
326	SLU 80	-1	-931	6021	37.52	0.36	0.01
326	SLU 81	-1	-945	6113	38.13	0.37	0.01
326	SLU 82	-1	-944	6113	38.1	0.37	0.01
326	SLU 83	-1	-956	6181	38.57	0.37	0.01
326	SLU 84	-1	-956	6182	38.54	0.37	0.01
326	SLE RA 1	-1	-616	4002	24.85	0.25	0
326	SLE RA 2	-1	-615	4002	24.83	0.25	0
326	SLE RA 3	-1	-629	4075	25.36	0.25	0
326	SLE RA 4	-1	-629	4076	25.34	0.26	0
326	SLE RA 5	-1	-623	4048	25.12	0.25	0
326	SLE RA 6	-1	-637	4121	25.65	0.26	0
326	SLE RA 7	-1	-636	4121	25.63	0.26	0
326	SLE RA 8	-1	-631	4093	25.44	0.25	0
326	SLE RA 9	-1	-631	4093	25.42	0.25	0
326	SLE RA 10	-1	-672	4359	27.1	0.27	0
326	SLE RA 11	-1	-685	4432	27.63	0.27	0
326	SLE RA 12	-1	-685	4433	27.61	0.27	0
326	SLE RA 13	-1	-679	4405	27.39	0.27	0
326	SLE RA 14	-1	-693	4478	27.92	0.27	0
326	SLE RA 15	-1	-692	4478	27.91	0.27	0
326	SLE RA 16	-1	-688	4450	27.71	0.27	0
326	SLE RA 17	-1	-687	4450	27.69	0.27	0
326	SLE RA 18	-1	-696	4512	28.1	0.27	0
326	SLE RA 19	-1	-696	4512	28.08	0.27	0
326	SLE RA 20	-1	-704	4557	28.39	0.27	0
326	SLE RA 21	-1	-704	4558	28.38	0.28	0
326	SLE FR 1	-1	-616	4002	24.85	0.25	0
326	SLE FR 2	-1	-616	4002	24.85	0.25	0
326	SLE FR 3	-1	-619	4020	24.97	0.25	0
326	SLE FR 4	-1	-640	4155	25.82	0.26	0
326	SLE FR 5	-1	-643	4173	25.94	0.26	0
326	SLE FR 6	-1	-656	4257	26.47	0.26	0
326	SLE QP 1	-1	-616	4002	24.85	0.25	0
326	SLE QP 2	-1	-640	4155	25.83	0.26	0
326	SLD 1	0	-261	3473	9.02	1.91	0
326	SLD 2	0	-261	3473	9.02	1.91	0
326	SLD 3	2	-812	4196	33.75	1.06	0
326	SLD 4	2	-812	4196	33.75	1.06	0
326	SLD 5	-3	310	2855	-16.72	2.04	0
326	SLD 6	-3	310	2855	-16.72	2.04	0
326	SLD 7	3	-1527	5262	65.71	-0.79	0
326	SLD 8	3	-1527	5262	65.71	-0.79	0
326	SLD 9	-4	247	3047	-14.06	1.3	0
326	SLD 10	-4	247	3047	-14.06	1.3	0
326	SLD 11	2	-1590	5454	68.37	-1.53	0.01
326	SLD 12	2	-1590	5454	68.37	-1.53	0.01
326	SLD 13	-3	-469	4113	17.9	-0.55	0.01
326	SLD 14	-3	-469	4113	17.9	-0.55	0.01
326	SLD 15	-2	-1020	4836	42.63	-1.4	0.01
326	SLD 16	-2	-1020	4836	42.63	-1.4	0.01
326	SLV 1	1	269	2537	-14.43	4.2	-0.01
326	SLV 2	1	269	2537	-14.43	4.2	-0.01
326	SLV 3	5	-1054	4271	44.92	2.08	-0.01
326	SLV 4	5	-1054	4271	44.92	2.08	-0.01
326	SLV 5	-7	1639	1039	-76.27	4.66	0
326	SLV 6	-7	1639	1039	-76.27	4.66	0
326	SLV 7	8	-2771	6820	121.57	-2.42	0.01
326	SLV 8	8	-2771	6820	121.57	-2.42	0.01
326	SLV 9	-9	1491	1489	-69.92	2.93	0
326	SLV 10	-9	1491	1489	-69.92	2.93	0
326	SLV 11	5	-2919	7270	127.92	-4.15	0.01
326	SLV 12	5	-2919	7270	127.92	-4.15	0.01
326	SLV 13	-7	-226	4038	6.73	-1.57	0.01
326	SLV 14	-7	-226	4038	6.73	-1.57	0.01
326	SLV 15	-3	-1549	5772	66.09	-3.69	0.02
326	SLV 16	-3	-1549	5772	66.09	-3.69	0.02
328	SLU 1	2	-754	2380	27.11	0.71	0.13
328	SLU 2	2	-757	2395	27.17	0.7	0.13
328	SLU 3	2	-775	2441	27.97	0.73	0.14
328	SLU 4	2	-777	2449	28	0.72	0.13
328	SLU 5	2	-769	2426	27.68	0.71	0.13
328	SLU 6	2	-788	2472	28.48	0.74	0.14
328	SLU 7	2	-790	2481	28.51	0.73	0.14
328	SLU 8	2	-778	2443	28.13	0.73	0.14
328	SLU 9	2	-780	2452	28.16	0.72	0.13
328	SLU 10	2	-862	2709	31.19	0.8	0.15
328	SLU 11	2	-880	2755	31.98	0.83	0.16
328	SLU 12	2	-882	2764	32.02	0.83	0.15
328	SLU 13	2	-874	2741	31.69	0.81	0.15
328	SLU 14	2	-893	2787	32.49	0.85	0.16
328	SLU 15	2	-894	2795	32.53	0.84	0.16
328	SLU 16	2	-883	2758	32.14	0.84	0.16

Nodo	Cont.	Reazione a traslazione			Reazione a rotazione		
Ind.	N.br.	x	y	z	x	y	z
328	SLU 17	2	-885	2766	32.18	0.83	0.15
328	SLU 18	2	-904	2829	32.85	0.86	0.16
328	SLU 19	2	-906	2838	32.88	0.85	0.16
328	SLU 20	2	-916	2861	33.35	0.87	0.16
328	SLU 21	2	-918	2870	33.39	0.86	0.16
328	SLU 22	2	-856	2684	31	0.81	0.15
328	SLU 23	2	-859	2699	31.06	0.8	0.15
328	SLU 24	2	-877	2745	31.86	0.83	0.15
328	SLU 25	2	-879	2753	31.9	0.82	0.15
328	SLU 26	2	-871	2730	31.57	0.81	0.15
328	SLU 27	2	-889	2776	32.37	0.84	0.16
328	SLU 28	2	-891	2785	32.4	0.83	0.16
328	SLU 29	2	-880	2747	32.02	0.83	0.15
328	SLU 30	2	-882	2756	32.05	0.82	0.15
328	SLU 31	3	-964	3013	35.08	0.9	0.17
328	SLU 32	3	-982	3059	35.88	0.94	0.17
328	SLU 33	3	-984	3068	35.91	0.93	0.17
328	SLU 34	3	-976	3044	35.59	0.91	0.17
328	SLU 35	3	-994	3090	36.38	0.95	0.18
328	SLU 36	3	-996	3099	36.42	0.94	0.17
328	SLU 37	3	-985	3062	36.03	0.94	0.17
328	SLU 38	3	-987	3070	36.07	0.93	0.17
328	SLU 39	3	-1006	3133	36.74	0.96	0.18
328	SLU 40	3	-1007	3142	36.77	0.95	0.18
328	SLU 41	3	-1018	3165	37.25	0.97	0.18
328	SLU 42	3	-1020	3173	37.28	0.96	0.18
328	SLU 43	3	-945	2990	33.91	0.88	0.16
328	SLU 44	2	-948	3005	33.97	0.87	0.16
328	SLU 45	3	-967	3051	34.77	0.91	0.17
328	SLU 46	3	-969	3059	34.8	0.9	0.17
328	SLU 47	3	-961	3036	34.48	0.88	0.16
328	SLU 48	3	-979	3082	35.27	0.92	0.17
328	SLU 49	3	-981	3091	35.31	0.91	0.17
328	SLU 50	3	-970	3053	34.93	0.91	0.17
328	SLU 51	3	-971	3062	34.96	0.9	0.17
328	SLU 52	3	-1053	3319	37.98	0.98	0.18
328	SLU 53	3	-1072	3365	38.78	1.01	0.19
328	SLU 54	3	-1074	3374	38.82	1	0.19
328	SLU 55	3	-1065	3350	38.49	0.99	0.18
328	SLU 56	3	-1084	3396	39.29	1.02	0.19
328	SLU 57	3	-1086	3405	39.32	1.02	0.19
328	SLU 58	3	-1074	3368	38.94	1.01	0.19
328	SLU 59	3	-1076	3376	38.98	1.01	0.19
328	SLU 60	3	-1095	3439	39.65	1.04	0.19
328	SLU 61	3	-1097	3448	39.68	1.03	0.19
328	SLU 62	3	-1107	3471	40.15	1.05	0.19
328	SLU 63	3	-1109	3479	40.19	1.04	0.19
328	SLU 64	3	-1047	3294	37.8	0.99	0.18
328	SLU 65	3	-1050	3309	37.86	0.97	0.18
328	SLU 66	3	-1068	3355	38.66	1.01	0.19
328	SLU 67	3	-1070	3363	38.7	1	0.19
328	SLU 68	3	-1062	3340	38.37	0.99	0.18
328	SLU 69	3	-1081	3386	39.17	1.02	0.19
328	SLU 70	3	-1083	3395	39.2	1.01	0.19
328	SLU 71	3	-1071	3357	38.82	1.01	0.19
328	SLU 72	3	-1073	3366	38.85	1	0.19
328	SLU 73	3	-1155	3623	41.88	1.08	0.2
328	SLU 74	3	-1173	3669	42.67	1.11	0.21
328	SLU 75	3	-1175	3678	42.71	1.11	0.21
328	SLU 76	3	-1167	3654	42.38	1.09	0.2
328	SLU 77	3	-1186	3700	43.18	1.13	0.21
328	SLU 78	3	-1187	3709	43.22	1.12	0.21
328	SLU 79	3	-1176	3672	42.83	1.12	0.21
328	SLU 80	3	-1178	3680	42.87	1.11	0.21
328	SLU 81	3	-1197	3743	43.54	1.14	0.21
328	SLU 82	3	-1199	3752	43.57	1.13	0.21
328	SLU 83	3	-1209	3775	44.05	1.15	0.21
328	SLU 84	3	-1211	3783	44.08	1.14	0.21
328	SLE RA 1	2	-783	2467	28.22	0.74	0.14
328	SLE RA 2	2	-785	2477	28.26	0.73	0.14
328	SLE RA 3	2	-797	2507	28.8	0.75	0.14
328	SLE RA 4	2	-799	2513	28.82	0.75	0.14
328	SLE RA 5	2	-793	2498	28.6	0.74	0.14
328	SLE RA 6	2	-805	2528	29.13	0.76	0.14
328	SLE RA 7	2	-807	2534	29.16	0.75	0.14
328	SLE RA 8	2	-799	2509	28.9	0.75	0.14
328	SLE RA 9	2	-801	2515	28.92	0.75	0.14
328	SLE RA 10	2	-855	2686	30.94	0.8	0.15
328	SLE RA 11	2	-867	2717	31.47	0.82	0.15
328	SLE RA 12	2	-869	2723	31.49	0.82	0.15
328	SLE RA 13	2	-863	2707	31.28	0.81	0.15
328	SLE RA 14	2	-875	2738	31.81	0.83	0.15
328	SLE RA 15	2	-877	2744	31.83	0.82	0.15
328	SLE RA 16	2	-869	2719	31.58	0.82	0.15
328	SLE RA 17	2	-870	2724	31.6	0.82	0.15
328	SLE RA 18	2	-883	2767	32.05	0.84	0.16
328	SLE RA 19	2	-884	2772	32.07	0.83	0.15
328	SLE RA 20	2	-891	2788	32.39	0.84	0.16
328	SLE RA 21	2	-892	2793	32.41	0.84	0.16
328	SLE FR 1	2	-783	2467	28.22	0.74	0.14

Nodo	Cont.	Reazione a traslazione			Reazione a rotazione		
Ind.	N.br.	x	y	z	x	y	z
328	SLE FR 2	2	-783	2469	28.23	0.73	0.14
328	SLE FR 3	2	-786	2476	28.36	0.74	0.14
328	SLE FR 4	2	-813	2559	29.38	0.77	0.14
328	SLE FR 5	2	-816	2565	29.51	0.77	0.14
328	SLE FR 6	2	-833	2617	30.14	0.79	0.15
328	SLE QP 1	2	-783	2467	28.22	0.74	0.14
328	SLE QP 2	2	-813	2557	29.37	0.77	0.14
328	SLD 1	-14	-831	2628	30.32	-3.49	-0.64
328	SLD 2	-14	-831	2628	30.32	-3.49	-0.64
328	SLD 3	-10	-1147	3598	40.59	-2.83	-0.51
328	SLD 4	-10	-1147	3598	40.59	-2.83	-0.51
328	SLD 5	-8	-339	1106	14.07	-1.51	-0.29
328	SLD 6	-8	-339	1106	14.07	-1.51	-0.29
328	SLD 7	4	-1392	4342	48.32	0.69	0.14
328	SLD 8	4	-1392	4342	48.32	0.69	0.14
328	SLD 9	1	-234	773	10.42	0.84	0.14
328	SLD 10	1	-234	773	10.42	0.84	0.14
328	SLD 11	12	-1287	4008	44.67	3.05	0.58
328	SLD 12	12	-1287	4008	44.67	3.05	0.58
328	SLD 13	15	-479	1516	18.15	4.37	0.8
328	SLD 14	15	-479	1516	18.15	4.37	0.8
328	SLD 15	18	-795	2487	28.43	5.03	0.93
328	SLD 16	18	-795	2487	28.43	5.03	0.93
328	SLV 1	-38	-852	2714	31.47	-9.59	-1.78
328	SLV 2	-38	-852	2714	31.47	-9.59	-1.78
328	SLV 3	-29	-1603	5021	55.9	-7.91	-1.45
328	SLV 4	-29	-1603	5021	55.9	-7.91	-1.45
328	SLV 5	-23	315	-894	-7.05	-4.88	-0.94
328	SLV 6	-23	315	-894	-7.05	-4.88	-0.94
328	SLV 7	6	-2189	6794	74.38	0.71	0.17
328	SLV 8	6	-2189	6794	74.38	0.71	0.17
328	SLV 9	-2	564	-1680	-15.64	0.82	0.12
328	SLV 10	-2	564	-1680	-15.64	0.82	0.12
328	SLV 11	28	-1940	6008	65.79	6.42	1.22
328	SLV 12	28	-1940	6008	65.79	6.42	1.22
328	SLV 13	34	-23	93	2.84	9.44	1.73
328	SLV 14	34	-23	93	2.84	9.44	1.73
328	SLV 15	42	-774	2400	27.27	11.12	2.07
328	SLV 16	42	-774	2400	27.27	11.12	2.07
329	SLU 1	5	-948	2450	19.2	-0.11	0
329	SLU 2	4	-901	2333	18.17	-0.1	0
329	SLU 3	5	-987	2553	19.97	-0.13	0
329	SLU 4	5	-959	2483	19.35	-0.12	0
329	SLU 5	4	-933	2416	18.76	-0.13	0
329	SLU 6	5	-1019	2636	20.56	-0.15	-0.01
329	SLU 7	5	-991	2566	19.94	-0.15	-0.01
329	SLU 8	5	-1011	2617	20.39	-0.16	-0.01
329	SLU 9	5	-983	2547	19.76	-0.16	-0.01
329	SLU 10	5	-1018	2634	20.56	-0.15	-0.01
329	SLU 11	5	-1104	2854	22.37	-0.17	-0.01
329	SLU 12	5	-1076	2783	21.75	-0.17	-0.01
329	SLU 13	5	-1050	2717	21.15	-0.17	-0.01
329	SLU 14	5	-1136	2937	22.96	-0.2	-0.02
329	SLU 15	5	-1108	2867	22.34	-0.2	-0.02
329	SLU 16	5	-1128	2918	22.78	-0.21	-0.02
329	SLU 17	5	-1100	2847	22.16	-0.2	-0.02
329	SLU 18	5	-1115	2879	22.62	-0.17	-0.01
329	SLU 19	5	-1087	2809	22	-0.17	-0.01
329	SLU 20	5	-1147	2963	23.22	-0.2	-0.02
329	SLU 21	5	-1119	2893	22.59	-0.19	-0.02
329	SLU 22	5	-1065	2752	21.6	-0.14	-0.01
329	SLU 23	5	-1019	2634	20.57	-0.14	0
329	SLU 24	5	-1105	2855	22.37	-0.16	-0.01
329	SLU 25	5	-1077	2784	21.75	-0.16	-0.01
329	SLU 26	5	-1050	2718	21.16	-0.16	-0.01
329	SLU 27	5	-1136	2938	22.96	-0.19	-0.02
329	SLU 28	5	-1108	2868	22.34	-0.19	-0.02
329	SLU 29	5	-1128	2918	22.79	-0.2	-0.02
329	SLU 30	5	-1100	2848	22.17	-0.19	-0.02
329	SLU 31	5	-1136	2935	22.96	-0.18	-0.01
329	SLU 32	5	-1222	3155	24.77	-0.21	-0.02
329	SLU 33	5	-1194	3085	24.15	-0.2	-0.02
329	SLU 34	5	-1167	3019	23.55	-0.21	-0.02
329	SLU 35	5	-1253	3239	25.36	-0.23	-0.03
329	SLU 36	5	-1225	3169	24.74	-0.23	-0.02
329	SLU 37	5	-1245	3219	25.18	-0.24	-0.03
329	SLU 38	5	-1217	3149	24.56	-0.24	-0.03
329	SLU 39	5	-1232	3181	25.02	-0.21	-0.02
329	SLU 40	5	-1204	3111	24.4	-0.2	-0.02
329	SLU 41	5	-1264	3265	25.62	-0.23	-0.03
329	SLU 42	5	-1236	3194	25	-0.23	-0.02
329	SLU 43	6	-1192	3081	24.14	-0.13	0
329	SLU 44	6	-1146	2964	23.1	-0.12	0
329	SLU 45	6	-1232	3185	24.91	-0.15	0
329	SLU 46	6	-1204	3114	24.29	-0.15	0
329	SLU 47	6	-1177	3048	23.69	-0.15	0
329	SLU 48	6	-1263	3268	25.5	-0.17	-0.01
329	SLU 49	6	-1235	3198	24.88	-0.17	-0.01
329	SLU 50	6	-1255	3248	25.32	-0.18	-0.01
329	SLU 51	6	-1227	3178	24.7	-0.18	-0.01

Nodo	Cont.	Reazione a traslazione			Reazione a rotazione		
Ind.	N.br.	x	y	z	x	y	z
329	SLU 52	6	-1262	3265	25.5	-0.17	-0.01
329	SLU 53	6	-1349	3485	27.3	-0.19	-0.01
329	SLU 54	6	-1321	3415	26.68	-0.19	-0.01
329	SLU 55	6	-1294	3349	26.09	-0.19	-0.01
329	SLU 56	6	-1380	3569	27.9	-0.22	-0.02
329	SLU 57	6	-1352	3498	27.27	-0.22	-0.02
329	SLU 58	6	-1372	3549	27.72	-0.23	-0.02
329	SLU 59	6	-1344	3479	27.1	-0.22	-0.02
329	SLU 60	6	-1359	3511	27.56	-0.19	-0.01
329	SLU 61	6	-1331	3441	26.94	-0.19	-0.01
329	SLU 62	6	-1391	3595	28.15	-0.22	-0.02
329	SLU 63	6	-1363	3524	27.53	-0.22	-0.02
329	SLU 64	6	-1310	3383	26.54	-0.16	0
329	SLU 65	6	-1263	3266	25.5	-0.16	0
329	SLU 66	6	-1349	3486	27.31	-0.18	-0.01
329	SLU 67	6	-1321	3416	26.69	-0.18	-0.01
329	SLU 68	6	-1294	3350	26.1	-0.19	-0.01
329	SLU 69	6	-1380	3570	27.9	-0.21	-0.01
329	SLU 70	6	-1352	3499	27.28	-0.21	-0.01
329	SLU 71	6	-1373	3550	27.72	-0.22	-0.02
329	SLU 72	6	-1345	3480	27.1	-0.21	-0.02
329	SLU 73	6	-1380	3567	27.9	-0.2	-0.01
329	SLU 74	7	-1466	3787	29.7	-0.23	-0.02
329	SLU 75	7	-1438	3717	29.08	-0.22	-0.02
329	SLU 76	6	-1411	3650	28.49	-0.23	-0.02
329	SLU 77	7	-1497	3870	30.3	-0.25	-0.02
329	SLU 78	7	-1469	3800	29.68	-0.25	-0.02
329	SLU 79	7	-1490	3851	30.12	-0.26	-0.03
329	SLU 80	6	-1461	3781	29.5	-0.26	-0.02
329	SLU 81	7	-1477	3813	29.96	-0.23	-0.02
329	SLU 82	7	-1449	3742	29.34	-0.22	-0.02
329	SLU 83	7	-1508	3896	30.55	-0.25	-0.02
329	SLU 84	7	-1480	3826	29.93	-0.25	-0.02
329	SLE RA 1	5	-982	2536	19.89	-0.12	0
329	SLE RA 2	5	-950	2458	19.2	-0.11	0
329	SLE RA 3	5	-1008	2605	20.4	-0.13	0
329	SLE RA 4	5	-989	2558	19.99	-0.13	0
329	SLE RA 5	5	-971	2514	19.59	-0.13	0
329	SLE RA 6	5	-1029	2660	20.8	-0.15	-0.01
329	SLE RA 7	5	-1010	2614	20.38	-0.15	-0.01
329	SLE RA 8	5	-1024	2647	20.68	-0.15	-0.01
329	SLE RA 9	5	-1005	2601	20.26	-0.15	-0.01
329	SLE RA 10	5	-1028	2659	20.79	-0.14	-0.01
329	SLE RA 11	5	-1086	2805	22	-0.16	-0.01
329	SLE RA 12	5	-1067	2758	21.58	-0.16	-0.01
329	SLE RA 13	5	-1049	2714	21.19	-0.16	-0.01
329	SLE RA 14	5	-1107	2861	22.39	-0.18	-0.01
329	SLE RA 15	5	-1088	2814	21.98	-0.18	-0.01
329	SLE RA 16	5	-1102	2848	22.27	-0.18	-0.02
329	SLE RA 17	5	-1083	2801	21.86	-0.18	-0.02
329	SLE RA 18	5	-1093	2822	22.17	-0.16	-0.01
329	SLE RA 19	5	-1074	2776	21.75	-0.16	-0.01
329	SLE RA 20	5	-1114	2878	22.56	-0.18	-0.01
329	SLE RA 21	5	-1095	2831	22.15	-0.18	-0.01
329	SLE FR 1	5	-982	2536	19.89	-0.12	0
329	SLE FR 2	5	-975	2520	19.75	-0.12	0
329	SLE FR 3	5	-990	2558	20.04	-0.13	0
329	SLE FR 4	5	-1009	2606	20.43	-0.13	0
329	SLE FR 5	5	-1023	2644	20.73	-0.14	-0.01
329	SLE FR 6	5	-1037	2679	21.03	-0.14	-0.01
329	SLE QP 1	5	-982	2536	19.89	-0.12	0
329	SLE QP 2	5	-1015	2622	20.57	-0.13	0
329	SLD 1	2	-582	1478	12.32	1.24	0.43
329	SLD 2	2	-582	1478	12.32	1.24	0.43
329	SLD 3	-12	-792	2020	16.69	0.16	0.08
329	SLD 4	-12	-792	2020	16.69	0.16	0.08
329	SLD 5	24	-566	1457	11.47	1.9	0.65
329	SLD 6	24	-566	1457	11.47	1.9	0.65
329	SLD 7	-20	-1267	3263	26.03	-1.67	-0.5
329	SLD 8	-20	-1267	3263	26.03	-1.67	-0.5
329	SLD 9	30	-763	1981	15.11	1.4	0.49
329	SLD 10	30	-763	1981	15.11	1.4	0.49
329	SLD 11	-15	-1464	3787	29.67	-2.16	-0.66
329	SLD 12	-15	-1464	3787	29.67	-2.16	-0.66
329	SLD 13	21	-1238	3224	24.45	-0.43	-0.09
329	SLD 14	21	-1238	3224	24.45	-0.43	-0.09
329	SLD 15	8	-1448	3766	28.82	-1.5	-0.44
329	SLD 16	8	-1448	3766	28.82	-1.5	-0.44
329	SLV 1	-2	1	-62	1.22	3.23	1.06
329	SLV 2	-2	1	-62	1.22	3.23	1.06
329	SLV 3	-36	-495	1216	11.5	0.53	0.19
329	SLV 4	-36	-495	1216	11.5	0.53	0.19
329	SLV 5	54	41	-120	-0.82	4.99	1.64
329	SLV 6	54	41	-120	-0.82	4.99	1.64
329	SLV 7	-58	-1611	4137	33.44	-4.04	-1.27
329	SLV 8	-58	-1611	4137	33.44	-4.04	-1.27
329	SLV 9	68	-419	1107	7.7	3.78	1.26
329	SLV 10	68	-419	1107	7.7	3.78	1.26
329	SLV 11	-44	-2071	5364	41.96	-5.25	-1.65
329	SLV 12	-44	-2071	5364	41.96	-5.25	-1.65

Nodo	Cont.	Reazione a traslazione			Reazione a rotazione		
Ind.	N.br.	x	y	z	x	y	z
329	SLV 13	45	-1535	4028	29.64	-0.79	-0.2
329	SLV 14	45	-1535	4028	29.64	-0.79	-0.2
329	SLV 15	12	-2031	5306	39.92	-3.5	-1.07
329	SLV 16	12	-2031	5306	39.92	-3.5	-1.07
330	SLU 1	13	547	2989	10.47	1.38	-0.36
330	SLU 2	13	547	2990	10.52	1.35	-0.35
330	SLU 3	13	561	3070	10.76	1.4	-0.36
330	SLU 4	13	561	3070	10.79	1.39	-0.36
330	SLU 5	13	555	3034	10.65	1.36	-0.35
330	SLU 6	13	570	3114	10.88	1.41	-0.37
330	SLU 7	13	570	3115	10.91	1.4	-0.36
330	SLU 8	13	563	3078	10.71	1.39	-0.36
330	SLU 9	13	563	3078	10.75	1.38	-0.36
330	SLU 10	15	618	3394	12.29	1.54	-0.4
330	SLU 11	15	633	3474	12.53	1.59	-0.41
330	SLU 12	15	633	3474	12.56	1.58	-0.41
330	SLU 13	15	627	3438	12.42	1.55	-0.41
330	SLU 14	15	642	3518	12.65	1.6	-0.42
330	SLU 15	15	642	3518	12.68	1.59	-0.41
330	SLU 16	15	635	3482	12.48	1.58	-0.41
330	SLU 17	15	635	3482	12.52	1.57	-0.41
330	SLU 18	16	649	3566	13	1.65	-0.43
330	SLU 19	16	649	3566	13.03	1.63	-0.43
330	SLU 20	16	657	3610	13.12	1.65	-0.43
330	SLU 21	16	657	3611	13.15	1.64	-0.43
330	SLU 22	15	615	3375	12.14	1.56	-0.4
330	SLU 23	15	615	3376	12.2	1.54	-0.4
330	SLU 24	15	630	3456	12.43	1.59	-0.41
330	SLU 25	15	630	3456	12.46	1.57	-0.41
330	SLU 26	15	624	3420	12.32	1.54	-0.4
330	SLU 27	15	639	3500	12.55	1.6	-0.42
330	SLU 28	15	639	3501	12.59	1.58	-0.41
330	SLU 29	15	632	3464	12.39	1.58	-0.41
330	SLU 30	15	632	3464	12.42	1.56	-0.41
330	SLU 31	17	687	3780	13.97	1.73	-0.45
330	SLU 32	17	702	3860	14.2	1.78	-0.46
330	SLU 33	17	702	3860	14.23	1.76	-0.46
330	SLU 34	17	695	3824	14.09	1.73	-0.45
330	SLU 35	17	710	3904	14.32	1.79	-0.47
330	SLU 36	17	710	3905	14.36	1.77	-0.46
330	SLU 37	17	704	3868	14.16	1.77	-0.46
330	SLU 38	17	704	3868	14.19	1.75	-0.46
330	SLU 39	18	718	3952	14.67	1.83	-0.48
330	SLU 40	18	718	3953	14.7	1.82	-0.47
330	SLU 41	18	726	3997	14.79	1.84	-0.48
330	SLU 42	18	726	3997	14.82	1.82	-0.48
330	SLU 43	16	687	3754	13.03	1.72	-0.45
330	SLU 44	16	687	3754	13.09	1.7	-0.44
330	SLU 45	17	702	3834	13.32	1.75	-0.45
330	SLU 46	17	702	3835	13.36	1.74	-0.45
330	SLU 47	16	695	3799	13.21	1.71	-0.44
330	SLU 48	17	710	3879	13.45	1.76	-0.46
330	SLU 49	17	710	3879	13.48	1.75	-0.45
330	SLU 50	17	704	3842	13.28	1.74	-0.45
330	SLU 51	16	704	3843	13.31	1.73	-0.45
330	SLU 52	18	759	4158	14.86	1.89	-0.49
330	SLU 53	19	774	4238	15.09	1.94	-0.51
330	SLU 54	19	774	4238	15.13	1.93	-0.5
330	SLU 55	18	767	4202	14.98	1.9	-0.5
330	SLU 56	19	782	4283	15.22	1.95	-0.51
330	SLU 57	19	782	4283	15.25	1.94	-0.51
330	SLU 58	19	776	4246	15.05	1.93	-0.5
330	SLU 59	18	776	4247	15.08	1.92	-0.5
330	SLU 60	19	790	4330	15.56	2	-0.52
330	SLU 61	19	790	4331	15.6	1.98	-0.52
330	SLU 62	19	798	4375	15.69	2	-0.52
330	SLU 63	19	798	4375	15.72	1.99	-0.52
330	SLU 64	18	756	4140	14.71	1.91	-0.49
330	SLU 65	18	756	4140	14.76	1.89	-0.49
330	SLU 66	18	771	4220	15	1.94	-0.5
330	SLU 67	18	771	4221	15.03	1.92	-0.5
330	SLU 68	18	764	4185	14.89	1.89	-0.49
330	SLU 69	19	779	4265	15.12	1.95	-0.51
330	SLU 70	19	779	4265	15.15	1.93	-0.5
330	SLU 71	18	773	4229	14.95	1.92	-0.5
330	SLU 72	18	773	4229	14.99	1.91	-0.5
330	SLU 73	20	827	4544	16.53	2.08	-0.54
330	SLU 74	20	842	4624	16.77	2.13	-0.55
330	SLU 75	20	842	4625	16.8	2.11	-0.55
330	SLU 76	20	836	4588	16.66	2.08	-0.54
330	SLU 77	21	851	4669	16.89	2.14	-0.56
330	SLU 78	21	851	4669	16.92	2.12	-0.55
330	SLU 79	20	844	4632	16.72	2.11	-0.55
330	SLU 80	20	844	4633	16.76	2.1	-0.55
330	SLU 81	21	858	4717	17.24	2.18	-0.57
330	SLU 82	21	858	4717	17.27	2.17	-0.56
330	SLU 83	21	867	4761	17.36	2.19	-0.57
330	SLU 84	21	867	4761	17.39	2.17	-0.57
330	SLE RA 1	14	566	3100	10.95	1.43	-0.37
330	SLE RA 2	13	566	3100	10.98	1.41	-0.37

Nodo	Cont.	Reazione a traslazione			Reazione a rotazione		
Ind.	N.br.	x	y	z	x	y	z
330	SLE RA 3	14	576	3153	11.14	1.45	-0.38
330	SLE RA 4	14	576	3154	11.16	1.44	-0.37
330	SLE RA 5	14	572	3130	11.06	1.42	-0.37
330	SLE RA 6	14	582	3183	11.22	1.45	-0.38
330	SLE RA 7	14	582	3183	11.24	1.44	-0.38
330	SLE RA 8	14	577	3159	11.11	1.44	-0.37
330	SLE RA 9	14	577	3159	11.13	1.43	-0.37
330	SLE RA 10	15	614	3369	12.16	1.54	-0.4
330	SLE RA 11	15	624	3423	12.32	1.57	-0.41
330	SLE RA 12	15	624	3423	12.34	1.56	-0.41
330	SLE RA 13	15	620	3399	12.24	1.54	-0.4
330	SLE RA 14	15	630	3452	12.4	1.58	-0.41
330	SLE RA 15	15	630	3452	12.42	1.57	-0.41
330	SLE RA 16	15	625	3428	12.29	1.57	-0.41
330	SLE RA 17	15	625	3428	12.31	1.56	-0.41
330	SLE RA 18	15	635	3484	12.63	1.61	-0.42
330	SLE RA 19	15	635	3484	12.65	1.6	-0.42
330	SLE RA 20	16	640	3514	12.71	1.61	-0.42
330	SLE RA 21	15	640	3514	12.74	1.61	-0.42
330	SLE FR 1	14	566	3100	10.95	1.43	-0.37
330	SLE FR 2	14	566	3100	10.95	1.42	-0.37
330	SLE FR 3	14	569	3111	10.98	1.43	-0.37
330	SLE FR 4	14	587	3215	11.46	1.48	-0.38
330	SLE FR 5	14	589	3227	11.48	1.48	-0.39
330	SLE FR 6	14	600	3292	11.79	1.52	-0.39
330	SLE QP 1	14	566	3100	10.95	1.43	-0.37
330	SLE QP 2	14	587	3215	11.45	1.48	-0.38
330	SLD 1	7	400	2315	11.48	10.87	-2.09
330	SLD 2	7	400	2315	11.48	10.87	-2.09
330	SLD 3	15	488	2739	15.18	9.29	-1.75
330	SLD 4	15	488	2739	15.18	9.29	-1.75
330	SLD 5	1	397	2302	5.86	6.7	-1.41
330	SLD 6	1	397	2302	5.86	6.7	-1.41
330	SLD 7	25	690	3715	18.17	1.42	-0.28
330	SLD 8	25	690	3715	18.17	1.42	-0.28
330	SLD 9	3	483	2715	4.73	1.54	-0.49
330	SLD 10	3	483	2715	4.73	1.54	-0.49
330	SLD 11	27	776	4128	17.05	-3.74	0.64
330	SLD 12	27	776	4128	17.05	-3.74	0.64
330	SLD 13	14	686	3691	7.73	-6.33	0.98
330	SLD 14	14	686	3691	7.73	-6.33	0.98
330	SLD 15	21	773	4115	11.42	-7.91	1.32
330	SLD 16	21	773	4115	11.42	-7.91	1.32
330	SLV 1	-3	145	1081	11.43	23.57	-4.4
330	SLV 2	-3	145	1081	11.43	23.57	-4.4
330	SLV 3	16	361	2129	20.34	19.64	-3.55
330	SLV 4	16	361	2129	20.34	19.64	-3.55
330	SLV 5	-19	125	985	-2.06	14.07	-2.87
330	SLV 6	-19	125	985	-2.06	14.07	-2.87
330	SLV 7	42	848	4478	27.62	0.97	-0.05
330	SLV 8	42	848	4478	27.62	0.97	-0.05
330	SLV 9	-14	326	1952	-4.72	2	-0.72
330	SLV 10	-14	326	1952	-4.72	2	-0.72
330	SLV 11	47	1048	5445	24.96	-11.11	2.1
330	SLV 12	47	1048	5445	24.96	-11.11	2.1
330	SLV 13	13	812	4301	2.57	-16.67	2.78
330	SLV 14	13	812	4301	2.57	-16.67	2.78
330	SLV 15	31	1029	5349	11.47	-20.61	3.63
330	SLV 16	31	1029	5349	11.47	-20.61	3.63
331	SLU 1	-2	-688	2582	61.79	1.18	0
331	SLU 2	-2	-687	2581	61.74	1.18	0
331	SLU 3	-2	-713	2654	64.08	1.22	0
331	SLU 4	-2	-712	2654	64.04	1.22	0
331	SLU 5	-2	-703	2629	63.24	1.2	0
331	SLU 6	-2	-729	2702	65.58	1.25	0
331	SLU 7	-2	-728	2701	65.55	1.25	0
331	SLU 8	-2	-720	2677	64.81	1.23	0
331	SLU 9	-2	-720	2677	64.77	1.23	0
331	SLU 10	-2	-784	2937	70.56	1.37	0
331	SLU 11	-2	-810	3010	72.9	1.41	0
331	SLU 12	-2	-809	3009	72.87	1.41	0
331	SLU 13	-2	-800	2984	72.07	1.4	0
331	SLU 14	-2	-826	3057	74.41	1.44	0
331	SLU 15	-2	-825	3057	74.38	1.44	0
331	SLU 16	-2	-817	3033	73.63	1.42	0
331	SLU 17	-2	-816	3032	73.6	1.42	0
331	SLU 18	-2	-826	3090	74.4	1.45	0
331	SLU 19	-2	-826	3090	74.37	1.45	0
331	SLU 20	-2	-842	3137	75.91	1.48	0
331	SLU 21	-2	-842	3137	75.87	1.48	0
331	SLU 22	-2	-784	2915	70.54	1.36	0
331	SLU 23	-2	-782	2915	70.48	1.36	0
331	SLU 24	-2	-808	2988	72.82	1.41	0
331	SLU 25	-2	-808	2987	72.79	1.41	0
331	SLU 26	-2	-798	2962	71.99	1.39	0
331	SLU 27	-2	-824	3035	74.33	1.43	0
331	SLU 28	-2	-824	3035	74.3	1.43	0
331	SLU 29	-2	-816	3011	73.55	1.42	0
331	SLU 30	-2	-815	3010	73.52	1.42	0
331	SLU 31	-2	-879	3270	79.31	1.56	0

Nodo	Cont.	Reazione a traslazione			Reazione a rotazione		
Ind.	N.br.	x	y	z	x	y	z
331	SLU 32	-2	-905	3343	81.65	1.6	0
331	SLU 33	-2	-904	3343	81.62	1.6	0
331	SLU 34	-2	-895	3318	80.82	1.58	0
331	SLU 35	-2	-921	3391	83.16	1.63	0
331	SLU 36	-2	-920	3391	83.12	1.63	0
331	SLU 37	-2	-913	3366	82.38	1.61	0
331	SLU 38	-2	-912	3366	82.35	1.61	0
331	SLU 39	-2	-922	3423	83.15	1.64	0
331	SLU 40	-2	-921	3423	83.12	1.64	0
331	SLU 41	-2	-938	3471	84.66	1.67	0
331	SLU 42	-2	-937	3471	84.62	1.67	0
331	SLU 43	-2	-862	3242	77.33	1.47	0
331	SLU 44	-2	-861	3241	77.28	1.47	0
331	SLU 45	-2	-887	3314	79.62	1.51	0
331	SLU 46	-2	-886	3314	79.58	1.51	0
331	SLU 47	-2	-877	3289	78.78	1.49	0
331	SLU 48	-2	-903	3362	81.12	1.54	0
331	SLU 49	-2	-902	3361	81.09	1.54	0
331	SLU 50	-2	-894	3337	80.35	1.52	0
331	SLU 51	-2	-893	3337	80.31	1.52	0
331	SLU 52	-2	-957	3597	86.1	1.66	0
331	SLU 53	-2	-983	3670	88.44	1.7	0
331	SLU 54	-2	-983	3669	88.41	1.7	0
331	SLU 55	-2	-973	3645	87.61	1.69	0
331	SLU 56	-2	-999	3717	89.95	1.73	0
331	SLU 57	-2	-999	3717	89.91	1.73	0
331	SLU 58	-2	-991	3693	89.17	1.71	0
331	SLU 59	-2	-990	3692	89.14	1.71	0
331	SLU 60	-2	-1000	3750	89.94	1.74	0
331	SLU 61	-2	-999	3750	89.91	1.74	0
331	SLU 62	-2	-1016	3798	91.45	1.77	0
331	SLU 63	-2	-1015	3797	91.41	1.77	0
331	SLU 64	-2	-957	3575	86.08	1.65	0
331	SLU 65	-2	-956	3575	86.02	1.65	0
331	SLU 66	-2	-982	3648	88.36	1.7	0
331	SLU 67	-2	-981	3647	88.33	1.69	0
331	SLU 68	-2	-972	3623	87.53	1.68	0
331	SLU 69	-2	-998	3695	89.87	1.72	0
331	SLU 70	-2	-997	3695	89.84	1.72	0
331	SLU 71	-2	-990	3671	89.09	1.71	0
331	SLU 72	-2	-989	3670	89.06	1.71	0
331	SLU 73	-3	-1053	3931	94.85	1.84	0
331	SLU 74	-3	-1079	4003	97.19	1.89	0
331	SLU 75	-3	-1078	4003	97.16	1.89	0
331	SLU 76	-3	-1069	3978	96.36	1.87	0
331	SLU 77	-3	-1095	4051	98.7	1.92	0
331	SLU 78	-3	-1094	4051	98.66	1.91	0
331	SLU 79	-3	-1086	4026	97.92	1.9	0
331	SLU 80	-3	-1085	4026	97.88	1.9	0
331	SLU 81	-3	-1096	4084	98.69	1.93	0
331	SLU 82	-3	-1095	4083	98.66	1.93	0
331	SLU 83	-3	-1112	4131	100.2	1.96	0
331	SLU 84	-3	-1111	4131	100.16	1.95	0
331	SLE RA 1	-2	-716	2677	64.29	1.23	0
331	SLE RA 2	-2	-715	2677	64.26	1.23	0
331	SLE RA 3	-2	-732	2725	65.82	1.26	0
331	SLE RA 4	-2	-731	2725	65.79	1.26	0
331	SLE RA 5	-2	-725	2708	65.26	1.25	0
331	SLE RA 6	-2	-743	2757	66.82	1.28	0
331	SLE RA 7	-2	-742	2757	66.8	1.28	0
331	SLE RA 8	-2	-737	2741	66.3	1.27	0
331	SLE RA 9	-2	-736	2740	66.28	1.27	0
331	SLE RA 10	-2	-779	2914	70.14	1.36	0
331	SLE RA 11	-2	-796	2962	71.7	1.39	0
331	SLE RA 12	-2	-796	2962	71.68	1.39	0
331	SLE RA 13	-2	-790	2946	71.14	1.38	0
331	SLE RA 14	-2	-807	2994	72.7	1.41	0
331	SLE RA 15	-2	-807	2994	72.68	1.4	0
331	SLE RA 16	-2	-801	2978	72.19	1.39	0
331	SLE RA 17	-2	-801	2977	72.16	1.39	0
331	SLE RA 18	-2	-808	3016	72.7	1.41	0
331	SLE RA 19	-2	-807	3016	72.68	1.41	0
331	SLE RA 20	-2	-818	3048	73.7	1.43	0
331	SLE RA 21	-2	-818	3047	73.68	1.43	0
331	SLE FR 1	-2	-716	2677	64.29	1.23	0
331	SLE FR 2	-2	-715	2677	64.29	1.23	0
331	SLE FR 3	-2	-720	2690	64.69	1.24	0
331	SLE FR 4	-2	-743	2779	66.81	1.29	0
331	SLE FR 5	-2	-747	2791	67.22	1.29	0
331	SLE FR 6	-2	-762	2846	68.5	1.32	0
331	SLE QP 1	-2	-716	2677	64.29	1.23	0
331	SLE QP 2	-2	-743	2779	66.81	1.29	0
331	SLD 1	0	-667	2774	63.1	2.09	-0.01
331	SLD 2	0	-667	2774	63.1	2.09	-0.01
331	SLD 3	-1	-1118	3202	89.91	2.43	0
331	SLD 4	-1	-1118	3202	89.91	2.43	0
331	SLD 5	0	-37	2127	25.04	1	-0.01
331	SLD 6	0	-37	2127	25.04	1	-0.01
331	SLD 7	-3	-1539	3556	114.4	2.15	0
331	SLD 8	-3	-1539	3556	114.4	2.15	0

Nodo	Cont.	Reazione a traslazione			Reazione a rotazione		
Ind.	N.br.	x	y	z	x	y	z
331	SLD 9	-1	53	2001	19.23	0.42	0
331	SLD 10	-1	53	2001	19.23	0.42	0
331	SLD 11	-3	-1449	3430	108.59	1.57	0
331	SLD 12	-3	-1449	3430	108.59	1.57	0
331	SLD 13	-3	-369	2355	43.72	0.14	0
331	SLD 14	-3	-369	2355	43.72	0.14	0
331	SLD 15	-4	-819	2784	70.53	0.48	0
331	SLD 16	-4	-819	2784	70.53	0.48	0
331	SLV 1	2	-552	2755	57.29	3.14	-0.01
331	SLV 2	2	-552	2755	57.29	3.14	-0.01
331	SLV 3	1	-1639	3785	122	3.98	-0.01
331	SLV 4	1	-1639	3785	122	3.98	-0.01
331	SLV 5	2	961	1210	-34.18	0.57	-0.01
331	SLV 6	2	961	1210	-34.18	0.57	-0.01
331	SLV 7	-4	-2659	4642	181.51	3.37	0
331	SLV 8	-4	-2659	4642	181.51	3.37	0
331	SLV 9	0	1173	915	-47.88	-0.8	-0.01
331	SLV 10	0	1173	915	-47.88	-0.8	-0.01
331	SLV 11	-6	-2448	4347	167.81	2	0.01
331	SLV 12	-6	-2448	4347	167.81	2	0.01
331	SLV 13	-4	152	1773	11.63	-1.41	0
331	SLV 14	-4	152	1773	11.63	-1.41	0
331	SLV 15	-6	-934	2802	76.34	-0.57	0.01
331	SLV 16	-6	-934	2802	76.34	-0.57	0.01
332	SLU 1	26	41	6089	4.9	3.11	0.11
332	SLU 2	26	37	6091	5.16	3.1	0.11
332	SLU 3	27	43	6282	5.13	3.23	0.11
332	SLU 4	27	40	6283	5.28	3.22	0.11
332	SLU 5	26	38	6223	5.34	3.18	0.11
332	SLU 6	28	43	6413	5.31	3.31	0.12
332	SLU 7	27	41	6415	5.46	3.31	0.12
332	SLU 8	27	43	6352	5.26	3.27	0.12
332	SLU 9	27	40	6353	5.41	3.27	0.12
332	SLU 10	29	48	6967	5.65	3.54	0.12
332	SLU 11	30	53	7158	5.62	3.66	0.13
332	SLU 12	30	51	7160	5.77	3.66	0.13
332	SLU 13	30	49	7099	5.83	3.62	0.13
332	SLU 14	31	54	7290	5.8	3.75	0.13
332	SLU 15	31	51	7291	5.95	3.74	0.13
332	SLU 16	31	53	7228	5.75	3.71	0.13
332	SLU 17	31	51	7230	5.9	3.71	0.13
332	SLU 18	31	57	7341	5.6	3.73	0.13
332	SLU 19	31	54	7342	5.75	3.73	0.13
332	SLU 20	32	57	7472	5.78	3.82	0.13
332	SLU 21	32	55	7474	5.93	3.81	0.13
332	SLU 22	29	48	6929	5.57	3.54	0.12
332	SLU 23	29	44	6932	5.83	3.53	0.12
332	SLU 24	30	49	7123	5.8	3.66	0.13
332	SLU 25	30	47	7124	5.96	3.65	0.13
332	SLU 26	30	44	7063	6.01	3.61	0.13
332	SLU 27	31	50	7254	5.98	3.74	0.13
332	SLU 28	31	47	7256	6.14	3.74	0.13
332	SLU 29	31	49	7193	5.93	3.71	0.13
332	SLU 30	31	47	7194	6.09	3.7	0.13
332	SLU 31	33	54	7808	6.32	3.97	0.14
332	SLU 32	34	60	7999	6.29	4.1	0.14
332	SLU 33	34	57	8001	6.45	4.09	0.14
332	SLU 34	34	55	7940	6.5	4.05	0.14
332	SLU 35	35	61	8131	6.48	4.18	0.15
332	SLU 36	35	58	8132	6.63	4.18	0.15
332	SLU 37	34	60	8069	6.42	4.14	0.15
332	SLU 38	34	57	8071	6.58	4.14	0.15
332	SLU 39	35	63	8181	6.27	4.16	0.15
332	SLU 40	35	61	8183	6.43	4.16	0.15
332	SLU 41	35	64	8313	6.45	4.25	0.15
332	SLU 42	35	61	8315	6.61	4.24	0.15
332	SLU 43	32	52	7627	6.14	3.89	0.14
332	SLU 44	32	47	7629	6.39	3.88	0.14
332	SLU 45	33	53	7820	6.37	4.01	0.14
332	SLU 46	33	50	7822	6.52	4.01	0.14
332	SLU 47	33	48	7761	6.57	3.97	0.14
332	SLU 48	34	53	7952	6.55	4.09	0.14
332	SLU 49	34	51	7953	6.7	4.09	0.14
332	SLU 50	34	53	7890	6.5	4.06	0.14
332	SLU 51	34	50	7892	6.65	4.05	0.14
332	SLU 52	36	58	8506	6.88	4.32	0.15
332	SLU 53	37	63	8697	6.86	4.45	0.16
332	SLU 54	37	61	8698	7.01	4.44	0.16
332	SLU 55	37	59	8637	7.07	4.41	0.16
332	SLU 56	38	64	8828	7.04	4.53	0.16
332	SLU 57	38	62	8830	7.19	4.53	0.16
332	SLU 58	37	64	8767	6.99	4.5	0.16
332	SLU 59	37	61	8768	7.14	4.49	0.16
332	SLU 60	38	67	8879	6.84	4.52	0.16
332	SLU 61	38	64	8880	6.99	4.51	0.16
332	SLU 62	38	68	9011	7.02	4.6	0.16
332	SLU 63	38	65	9012	7.17	4.6	0.16
332	SLU 64	36	58	8468	6.81	4.32	0.15
332	SLU 65	36	54	8470	7.07	4.31	0.15
332	SLU 66	37	59	8661	7.04	4.44	0.16

Nodo	Cont.	Reazione a traslazione			Reazione a rotazione		
Ind.	N.br.	x	y	z	x	y	z
332	SLU 67	37	57	8662	7.2	4.44	0.16
332	SLU 68	37	55	8602	7.25	4.4	0.16
332	SLU 69	38	60	8793	7.22	4.53	0.16
332	SLU 70	38	57	8794	7.38	4.52	0.16
332	SLU 71	37	59	8731	7.17	4.49	0.16
332	SLU 72	37	57	8732	7.33	4.49	0.16
332	SLU 73	40	65	9347	7.56	4.75	0.17
332	SLU 74	41	70	9537	7.53	4.88	0.17
332	SLU 75	40	68	9539	7.69	4.88	0.17
332	SLU 76	40	65	9478	7.74	4.84	0.17
332	SLU 77	41	71	9669	7.71	4.96	0.17
332	SLU 78	41	68	9670	7.87	4.96	0.17
332	SLU 79	41	70	9607	7.66	4.93	0.17
332	SLU 80	41	68	9609	7.82	4.92	0.17
332	SLU 81	41	73	9720	7.51	4.95	0.17
332	SLU 82	41	71	9721	7.67	4.94	0.17
332	SLU 83	42	74	9851	7.69	5.03	0.18
332	SLU 84	42	72	9853	7.85	5.03	0.18
332	SLE RA 1	27	43	6329	5.09	3.23	0.11
332	SLE RA 2	27	40	6330	5.26	3.22	0.11
332	SLE RA 3	28	44	6458	5.25	3.31	0.12
332	SLE RA 4	28	42	6459	5.35	3.31	0.12
332	SLE RA 5	27	41	6418	5.38	3.28	0.12
332	SLE RA 6	28	45	6545	5.37	3.37	0.12
332	SLE RA 7	28	43	6546	5.47	3.36	0.12
332	SLE RA 8	28	44	6504	5.33	3.34	0.12
332	SLE RA 9	28	42	6505	5.43	3.34	0.12
332	SLE RA 10	29	48	6915	5.59	3.52	0.12
332	SLE RA 11	30	51	7042	5.57	3.6	0.13
332	SLE RA 12	30	50	7043	5.68	3.6	0.13
332	SLE RA 13	30	48	7002	5.71	3.57	0.13
332	SLE RA 14	30	52	7130	5.69	3.66	0.13
332	SLE RA 15	30	50	7131	5.8	3.65	0.13
332	SLE RA 16	30	51	7089	5.66	3.63	0.13
332	SLE RA 17	30	50	7090	5.76	3.63	0.13
332	SLE RA 18	30	53	7163	5.56	3.65	0.13
332	SLE RA 19	30	52	7164	5.66	3.64	0.13
332	SLE RA 20	31	54	7251	5.68	3.7	0.13
332	SLE RA 21	31	52	7252	5.78	3.7	0.13
332	SLE FR 1	27	43	6329	5.09	3.23	0.11
332	SLE FR 2	27	43	6329	5.13	3.23	0.11
332	SLE FR 3	27	43	6364	5.14	3.25	0.12
332	SLE FR 4	28	46	6580	5.27	3.35	0.12
332	SLE FR 5	28	46	6614	5.28	3.38	0.12
332	SLE FR 6	29	48	6746	5.33	3.44	0.12
332	SLE QP 1	27	43	6329	5.09	3.23	0.11
332	SLE QP 2	28	46	6579	5.23	3.35	0.12
332	SLD 1	32	544	5213	-20.03	4.58	0.18
332	SLD 2	32	544	5213	-20.03	4.58	0.18
332	SLD 3	41	195	5955	5.81	5.61	0.14
332	SLD 4	41	195	5955	5.81	5.61	0.14
332	SLD 5	16	725	5043	-41.53	2.17	0.2
332	SLD 6	16	725	5043	-41.53	2.17	0.2
332	SLD 7	44	-439	7518	44.59	5.59	0.06
332	SLD 8	44	-439	7518	44.59	5.59	0.06
332	SLD 9	11	531	5641	-34.13	1.12	0.17
332	SLD 10	11	531	5641	-34.13	1.12	0.17
332	SLD 11	39	-633	8115	52	4.54	0.04
332	SLD 12	39	-633	8115	52	4.54	0.04
332	SLD 13	15	-102	7203	4.65	1.1	0.1
332	SLD 14	15	-102	7203	4.65	1.1	0.1
332	SLD 15	24	-452	7946	30.49	2.13	0.06
332	SLD 16	24	-452	7946	30.49	2.13	0.06
332	SLV 1	37	1219	3355	-54.75	6.19	0.26
332	SLV 2	37	1219	3355	-54.75	6.19	0.26
332	SLV 3	58	382	5131	7.41	8.66	0.16
332	SLV 4	58	382	5131	7.41	8.66	0.16
332	SLV 5	0	1667	2919	-107.04	0.45	0.31
332	SLV 6	0	1667	2919	-107.04	0.45	0.31
332	SLV 7	68	-1122	8838	100.16	8.7	-0.02
332	SLV 8	68	-1122	8838	100.16	8.7	-0.02
332	SLV 9	-12	1214	4321	-89.7	-1.99	0.26
332	SLV 10	-12	1214	4321	-89.7	-1.99	0.26
332	SLV 11	56	-1574	10239	117.5	6.26	-0.08
332	SLV 12	56	-1574	10239	117.5	6.26	-0.08
332	SLV 13	-2	-290	8028	3.06	-1.96	0.08
332	SLV 14	-2	-290	8028	3.06	-1.96	0.08
332	SLV 15	19	-1126	9803	65.22	0.52	-0.02
332	SLV 16	19	-1126	9803	65.22	0.52	-0.02
334	SLU 1	-1	112	6186	-23.42	-0.57	0.01
334	SLU 2	-1	113	6200	-23.34	-0.6	0.01
334	SLU 3	-1	116	6339	-24.29	-0.59	0.01
334	SLU 4	-1	116	6348	-24.24	-0.61	0.01
334	SLU 5	-1	115	6278	-23.88	-0.62	0.01
334	SLU 6	-1	118	6417	-24.83	-0.61	0.01
334	SLU 7	-1	118	6426	-24.78	-0.63	0.01
334	SLU 8	-1	116	6340	-24.5	-0.61	0.01
334	SLU 9	-1	117	6349	-24.46	-0.63	0.01
334	SLU 10	-1	130	7008	-27.48	-0.73	0.01
334	SLU 11	-1	132	7147	-28.43	-0.72	0.01

Nodo	Cont.	Reazione a traslazione			Reazione a rotazione		
Ind.	N.br.	x	y	z	x	y	z
334	SLU 12	-1	133	7156	-28.38	-0.74	0.01
334	SLU 13	-1	132	7085	-28.02	-0.75	0.01
334	SLU 14	-1	134	7225	-28.97	-0.74	0.01
334	SLU 15	-1	135	7233	-28.93	-0.76	0.01
334	SLU 16	-1	133	7148	-28.65	-0.74	0.01
334	SLU 17	-1	133	7157	-28.6	-0.76	0.01
334	SLU 18	-1	136	7340	-29.34	-0.75	0.01
334	SLU 19	-1	137	7349	-29.29	-0.77	0.01
334	SLU 20	-1	138	7417	-29.88	-0.77	0.01
334	SLU 21	-1	139	7426	-29.83	-0.79	0.01
334	SLU 22	-1	128	6962	-27.29	-0.68	0.01
334	SLU 23	-1	129	6977	-27.21	-0.72	0.01
334	SLU 24	-1	132	7116	-28.16	-0.71	0.01
334	SLU 25	-1	132	7125	-28.11	-0.73	0.01
334	SLU 26	-1	131	7054	-27.75	-0.74	0.01
334	SLU 27	-1	134	7193	-28.7	-0.73	0.01
334	SLU 28	-1	134	7202	-28.65	-0.75	0.01
334	SLU 29	-1	132	7117	-28.37	-0.72	0.01
334	SLU 30	-1	132	7126	-28.33	-0.74	0.01
334	SLU 31	-1	146	7785	-31.35	-0.85	0.01
334	SLU 32	-1	148	7924	-32.3	-0.84	0.01
334	SLU 33	-1	149	7933	-32.25	-0.86	0.01
334	SLU 34	-1	148	7862	-31.89	-0.87	0.01
334	SLU 35	-1	150	8001	-32.84	-0.86	0.01
334	SLU 36	-1	151	8010	-32.8	-0.88	0.01
334	SLU 37	-1	149	7925	-32.52	-0.85	0.01
334	SLU 38	-1	149	7934	-32.47	-0.87	0.01
334	SLU 39	-1	152	8116	-33.2	-0.87	0.01
334	SLU 40	-1	152	8125	-33.16	-0.89	0.01
334	SLU 41	-1	154	8194	-33.75	-0.89	0.01
334	SLU 42	-1	154	8202	-33.7	-0.91	0.01
334	SLU 43	-1	140	7775	-29.11	-0.7	0.01
334	SLU 44	-1	141	7790	-29.03	-0.73	0.01
334	SLU 45	-1	144	7929	-29.99	-0.72	0.01
334	SLU 46	-1	144	7938	-29.94	-0.74	0.01
334	SLU 47	-1	143	7867	-29.58	-0.75	0.01
334	SLU 48	-1	146	8006	-30.53	-0.74	0.01
334	SLU 49	-1	146	8015	-30.48	-0.76	0.01
334	SLU 50	-1	144	7930	-30.2	-0.74	0.01
334	SLU 51	-1	145	7939	-30.15	-0.76	0.01
334	SLU 52	-1	158	8598	-33.18	-0.86	0.02
334	SLU 53	-1	161	8737	-34.13	-0.85	0.02
334	SLU 54	-1	161	8746	-34.08	-0.87	0.02
334	SLU 55	-1	160	8675	-33.72	-0.88	0.02
334	SLU 56	-1	163	8814	-34.67	-0.87	0.02
334	SLU 57	-1	163	8823	-34.62	-0.89	0.02
334	SLU 58	-1	161	8738	-34.35	-0.87	0.02
334	SLU 59	-1	161	8746	-34.3	-0.89	0.02
334	SLU 60	-1	164	8929	-35.03	-0.88	0.02
334	SLU 61	-1	165	8938	-34.99	-0.91	0.02
334	SLU 62	-1	166	9007	-35.58	-0.9	0.02
334	SLU 63	-1	167	9015	-35.53	-0.92	0.02
334	SLU 64	-1	156	8552	-32.98	-0.81	0.02
334	SLU 65	-1	157	8566	-32.9	-0.85	0.02
334	SLU 66	-1	160	8706	-33.85	-0.84	0.02
334	SLU 67	-1	160	8714	-33.81	-0.86	0.02
334	SLU 68	-1	159	8644	-33.45	-0.87	0.02
334	SLU 69	-1	162	8783	-34.4	-0.86	0.02
334	SLU 70	-1	162	8792	-34.35	-0.88	0.02
334	SLU 71	-1	160	8706	-34.07	-0.85	0.02
334	SLU 72	-1	161	8715	-34.02	-0.87	0.02
334	SLU 73	-2	174	9374	-37.05	-0.98	0.02
334	SLU 74	-2	177	9513	-38	-0.97	0.02
334	SLU 75	-2	177	9522	-37.95	-0.99	0.02
334	SLU 76	-2	176	9452	-37.59	-1	0.02
334	SLU 77	-2	179	9591	-38.54	-0.99	0.02
334	SLU 78	-2	179	9599	-38.49	-1.01	0.02
334	SLU 79	-2	177	9514	-38.22	-0.98	0.02
334	SLU 80	-2	177	9523	-38.17	-1	0.02
334	SLU 81	-2	180	9706	-38.9	-1	0.02
334	SLU 82	-2	181	9715	-38.85	-1.02	0.02
334	SLU 83	-2	182	9783	-39.45	-1.02	0.02
334	SLU 84	-2	183	9792	-39.4	-1.04	0.02
334	SLE RA 1	-1	117	6408	-24.52	-0.6	0.01
334	SLE RA 2	-1	117	6417	-24.47	-0.62	0.01
334	SLE RA 3	-1	119	6510	-25.1	-0.62	0.01
334	SLE RA 4	-1	119	6516	-25.07	-0.63	0.01
334	SLE RA 5	-1	119	6469	-24.83	-0.64	0.01
334	SLE RA 6	-1	120	6562	-25.46	-0.63	0.01
334	SLE RA 7	-1	121	6567	-25.43	-0.64	0.01
334	SLE RA 8	-1	119	6511	-25.25	-0.63	0.01
334	SLE RA 9	-1	120	6517	-25.22	-0.64	0.01
334	SLE RA 10	-1	128	6956	-27.23	-0.71	0.01
334	SLE RA 11	-1	130	7049	-27.86	-0.7	0.01
334	SLE RA 12	-1	131	7055	-27.83	-0.72	0.01
334	SLE RA 13	-1	130	7007	-27.59	-0.72	0.01
334	SLE RA 14	-1	132	7100	-28.23	-0.72	0.01
334	SLE RA 15	-1	132	7106	-28.19	-0.73	0.01
334	SLE RA 16	-1	131	7049	-28.01	-0.71	0.01
334	SLE RA 17	-1	131	7055	-27.98	-0.73	0.01

Nodo	Cont.	Reazione a traslazione			Reazione a rotazione		
Ind.	N.br.	x	y	z	x	y	z
334	SLE RA 18	-1	133	7177	-28.47	-0.72	0.01
334	SLE RA 19	-1	133	7183	-28.44	-0.74	0.01
334	SLE RA 20	-1	134	7229	-28.83	-0.74	0.01
334	SLE RA 21	-1	134	7234	-28.8	-0.75	0.01
334	SLE FR 1	-1	117	6408	-24.52	-0.6	0.01
334	SLE FR 2	-1	117	6410	-24.51	-0.6	0.01
334	SLE FR 3	-1	117	6428	-24.67	-0.6	0.01
334	SLE FR 4	-1	122	6640	-25.69	-0.64	0.01
334	SLE FR 5	-1	122	6659	-25.85	-0.64	0.01
334	SLE FR 6	-1	125	6792	-26.49	-0.66	0.01
334	SLE QP 1	-1	117	6408	-24.52	-0.6	0.01
334	SLE QP 2	-1	122	6638	-25.71	-0.64	0.01
334	SLD 1	34	54	7219	-20.12	19.44	0.01
334	SLD 2	34	54	7219	-20.12	19.44	0.01
334	SLD 3	31	95	8192	-7.97	17.64	0.01
334	SLD 4	31	95	8192	-7.97	17.64	0.01
334	SLD 5	14	38	5337	-42.47	8.11	0
334	SLD 6	14	38	5337	-42.47	8.11	0
334	SLD 7	4	177	8580	-1.95	2.13	0.02
334	SLD 8	4	177	8580	-1.95	2.13	0.02
334	SLD 9	-6	66	4697	-49.46	-3.4	0.01
334	SLD 10	-6	66	4697	-49.46	-3.4	0.01
334	SLD 11	-16	205	7940	-8.94	-9.38	0.02
334	SLD 12	-16	205	7940	-8.94	-9.38	0.02
334	SLD 13	-33	148	5085	-43.44	-18.92	0.01
334	SLD 14	-33	148	5085	-43.44	-18.92	0.01
334	SLD 15	-36	189	6058	-31.29	-20.71	0.02
334	SLD 16	-36	189	6058	-31.29	-20.71	0.02
334	SLV 1	82	-40	7970	-13.39	46.42	0
334	SLV 2	82	-40	7970	-13.39	46.42	0
334	SLV 3	74	62	10309	16.54	42.04	0.01
334	SLV 4	74	62	10309	16.54	42.04	0.01
334	SLV 5	35	-82	3490	-67.41	20.13	-0.01
334	SLV 6	35	-82	3490	-67.41	20.13	-0.01
334	SLV 7	10	259	11287	32.36	5.52	0.03
334	SLV 8	10	259	11287	32.36	5.52	0.03
334	SLV 9	-12	-16	1990	-83.77	-6.79	0
334	SLV 10	-12	-16	1990	-83.77	-6.79	0
334	SLV 11	-37	325	9787	15.99	-21.4	0.03
334	SLV 12	-37	325	9787	15.99	-21.4	0.03
334	SLV 13	-76	181	2968	-67.95	-43.31	0.02
334	SLV 14	-76	181	2968	-67.95	-43.31	0.02
334	SLV 15	-84	283	5307	-38.02	-47.69	0.03
334	SLV 16	-84	283	5307	-38.02	-47.69	0.03
335	SLU 1	1091	-740	7451	8.16	35.68	0.08
335	SLU 2	1091	-743	7462	8.31	35.67	0.08
335	SLU 3	1123	-764	7690	8.42	36.76	0.09
335	SLU 4	1123	-766	7696	8.51	36.75	0.09
335	SLU 5	1113	-760	7625	8.5	36.39	0.08
335	SLU 6	1145	-781	7853	8.62	37.48	0.09
335	SLU 7	1145	-783	7860	8.71	37.47	0.09
335	SLU 8	1135	-773	7778	8.54	37.12	0.09
335	SLU 9	1135	-775	7785	8.63	37.12	0.08
335	SLU 10	1260	-847	8547	9.39	41.37	0.1
335	SLU 11	1292	-869	8775	9.51	42.46	0.1
335	SLU 12	1293	-870	8782	9.6	42.45	0.1
335	SLU 13	1282	-864	8711	9.59	42.09	0.1
335	SLU 14	1314	-885	8939	9.7	43.18	0.1
335	SLU 15	1315	-887	8945	9.79	43.17	0.1
335	SLU 16	1304	-878	8864	9.63	42.83	0.1
335	SLU 17	1304	-880	8871	9.72	42.82	0.1
335	SLU 18	1332	-889	9002	9.71	43.83	0.11
335	SLU 19	1333	-891	9008	9.8	43.82	0.11
335	SLU 20	1354	-906	9166	9.9	44.55	0.11
335	SLU 21	1355	-908	9172	9.99	44.54	0.11
335	SLU 22	1247	-842	8488	9.28	40.92	0.1
335	SLU 23	1247	-845	8499	9.43	40.91	0.1
335	SLU 24	1280	-866	8727	9.55	42	0.1
335	SLU 25	1280	-868	8733	9.64	41.99	0.1
335	SLU 26	1269	-862	8663	9.62	41.63	0.1
335	SLU 27	1302	-883	8890	9.74	42.72	0.1
335	SLU 28	1302	-885	8897	9.83	42.71	0.1
335	SLU 29	1291	-876	8816	9.67	42.36	0.1
335	SLU 30	1291	-878	8822	9.76	42.36	0.1
335	SLU 31	1417	-950	9585	10.52	46.61	0.12
335	SLU 32	1449	-971	9812	10.63	47.7	0.12
335	SLU 33	1449	-973	9819	10.72	47.69	0.12
335	SLU 34	1439	-967	9748	10.71	47.33	0.12
335	SLU 35	1471	-988	9976	10.82	48.42	0.12
335	SLU 36	1471	-990	9983	10.91	48.41	0.12
335	SLU 37	1460	-980	9901	10.75	48.07	0.12
335	SLU 38	1460	-982	9908	10.84	48.06	0.12
335	SLU 39	1489	-991	10039	10.83	49.07	0.13
335	SLU 40	1489	-993	10046	10.92	49.06	0.12
335	SLU 41	1511	-1008	10203	11.02	49.79	0.13
335	SLU 42	1511	-1010	10209	11.11	49.78	0.12
335	SLU 43	1364	-927	9331	10.22	44.59	0.11
335	SLU 44	1364	-930	9341	10.37	44.58	0.1
335	SLU 45	1397	-951	9569	10.49	45.67	0.11
335	SLU 46	1397	-953	9576	10.58	45.66	0.11

Nodo	Cont.	Reazione a traslazione			Reazione a rotazione		
Ind.	N.br.	x	y	z	x	y	z
335	SLU 47	1386	-947	9505	10.56	45.3	0.1
335	SLU 48	1419	-968	9733	10.68	46.39	0.11
335	SLU 49	1419	-970	9739	10.77	46.38	0.11
335	SLU 50	1408	-960	9658	10.6	46.03	0.11
335	SLU 51	1408	-962	9665	10.7	46.02	0.11
335	SLU 52	1534	-1034	10427	11.46	50.28	0.12
335	SLU 53	1566	-1055	10655	11.57	51.37	0.12
335	SLU 54	1566	-1057	10661	11.66	51.36	0.12
335	SLU 55	1556	-1051	10591	11.65	51	0.12
335	SLU 56	1588	-1072	10819	11.76	52.09	0.13
335	SLU 57	1588	-1074	10825	11.85	52.08	0.12
335	SLU 58	1577	-1065	10744	11.69	51.73	0.12
335	SLU 59	1577	-1067	10750	11.78	51.72	0.12
335	SLU 60	1606	-1076	10882	11.77	52.74	0.13
335	SLU 61	1606	-1078	10888	11.86	52.73	0.13
335	SLU 62	1628	-1093	11045	11.96	53.46	0.13
335	SLU 63	1628	-1095	11052	12.05	53.45	0.13
335	SLU 64	1521	-1029	10368	11.34	49.83	0.12
335	SLU 65	1521	-1032	10379	11.49	49.82	0.12
335	SLU 66	1553	-1053	10606	11.61	50.91	0.12
335	SLU 67	1553	-1055	10613	11.7	50.9	0.12
335	SLU 68	1543	-1049	10542	11.69	50.54	0.12
335	SLU 69	1575	-1070	10770	11.8	51.63	0.12
335	SLU 70	1575	-1072	10777	11.89	51.62	0.12
335	SLU 71	1565	-1063	10695	11.73	51.27	0.12
335	SLU 72	1565	-1065	10702	11.82	51.26	0.12
335	SLU 73	1690	-1137	11464	12.58	55.52	0.14
335	SLU 74	1723	-1158	11692	12.69	56.61	0.14
335	SLU 75	1723	-1160	11698	12.78	56.6	0.14
335	SLU 76	1712	-1153	11628	12.77	56.24	0.14
335	SLU 77	1745	-1175	11856	12.89	57.33	0.14
335	SLU 78	1745	-1177	11862	12.98	57.32	0.14
335	SLU 79	1734	-1167	11781	12.81	56.97	0.14
335	SLU 80	1734	-1169	11787	12.9	56.96	0.14
335	SLU 81	1762	-1178	11919	12.89	57.98	0.15
335	SLU 82	1763	-1180	11925	12.98	57.97	0.14
335	SLU 83	1784	-1195	12083	13.09	58.7	0.15
335	SLU 84	1785	-1197	12089	13.18	58.69	0.15
335	SLE RA 1	1135	-769	7747	8.48	37.18	0.09
335	SLE RA 2	1135	-771	7754	8.58	37.17	0.09
335	SLE RA 3	1157	-785	7906	8.66	37.9	0.09
335	SLE RA 4	1157	-786	7911	8.72	37.89	0.09
335	SLE RA 5	1150	-782	7864	8.71	37.65	0.09
335	SLE RA 6	1172	-796	8016	8.78	38.38	0.09
335	SLE RA 7	1172	-798	8020	8.84	38.37	0.09
335	SLE RA 8	1165	-791	7966	8.74	38.14	0.09
335	SLE RA 9	1165	-793	7970	8.8	38.14	0.09
335	SLE RA 10	1248	-841	8478	9.3	40.97	0.1
335	SLE RA 11	1270	-855	8630	9.38	41.7	0.1
335	SLE RA 12	1270	-856	8634	9.44	41.69	0.1
335	SLE RA 13	1263	-852	8587	9.43	41.45	0.1
335	SLE RA 14	1285	-866	8739	9.51	42.18	0.1
335	SLE RA 15	1285	-867	8744	9.57	42.17	0.1
335	SLE RA 16	1277	-861	8689	9.46	41.94	0.1
335	SLE RA 17	1278	-862	8694	9.52	41.94	0.1
335	SLE RA 18	1297	-868	8781	9.51	42.61	0.11
335	SLE RA 19	1297	-870	8786	9.57	42.6	0.11
335	SLE RA 20	1311	-880	8890	9.64	43.09	0.11
335	SLE RA 21	1311	-881	8895	9.7	43.08	0.11
335	SLE FR 1	1135	-769	7747	8.48	37.18	0.09
335	SLE FR 2	1135	-769	7749	8.5	37.18	0.09
335	SLE FR 3	1141	-773	7791	8.53	37.37	0.09
335	SLE FR 4	1184	-799	8059	8.81	38.81	0.09
335	SLE FR 5	1190	-803	8101	8.84	39	0.09
335	SLE FR 6	1216	-819	8264	9	39.9	0.1
335	SLE QP 1	1135	-769	7747	8.48	37.18	0.09
335	SLE QP 2	1184	-799	8057	8.79	38.81	0.09
335	SLD 1	1506	-506	8592	-5.59	53.41	0.35
335	SLD 2	1506	-506	8592	-5.59	53.41	0.35
335	SLD 3	1641	-866	10381	9.58	56.84	0.18
335	SLD 4	1641	-866	10381	9.58	56.84	0.18
335	SLD 5	1076	-166	5504	-18.53	37.99	0.43
335	SLD 6	1076	-166	5504	-18.53	37.99	0.43
335	SLD 7	1525	-1364	11469	32.04	49.42	-0.14
335	SLD 8	1525	-1364	11469	32.04	49.42	-0.14
335	SLD 9	842	-234	4646	-14.46	28.2	0.32
335	SLD 10	842	-234	4646	-14.46	28.2	0.32
335	SLD 11	1291	-1431	10611	36.11	39.63	-0.24
335	SLD 12	1291	-1431	10611	36.11	39.63	-0.24
335	SLD 13	726	-732	5734	8	20.78	0.01
335	SLD 14	726	-732	5734	8	20.78	0.01
335	SLD 15	861	-1091	7523	23.17	24.21	-0.16
335	SLD 16	861	-1091	7523	23.17	24.21	-0.16
335	SLV 1	1933	-101	9263	-25.38	72.77	0.7
335	SLV 2	1933	-101	9263	-25.38	72.77	0.7
335	SLV 3	2255	-962	13559	11.11	80.98	0.29
335	SLV 4	2255	-962	13559	11.11	80.98	0.29
335	SLV 5	920	718	1902	-56.8	36.54	0.9
335	SLV 6	920	718	1902	-56.8	36.54	0.9
335	SLV 7	1994	-2155	16225	64.83	63.92	-0.47

Nodo	Cont.	Reazione a traslazione			Reazione a rotazione		
Ind.	N.br.	x	y	z	x	y	z
335	SLV 8	1994	-2155	16225	64.83	63.92	-0.47
335	SLV 9	373	557	-110	-47.25	13.7	0.66
335	SLV 10	373	557	-110	-47.25	13.7	0.66
335	SLV 11	1448	-2315	14213	74.38	41.08	-0.71
335	SLV 12	1448	-2315	14213	74.38	41.08	-0.71
335	SLV 13	112	-635	2556	6.47	-3.36	-0.1
335	SLV 14	112	-635	2556	6.47	-3.36	-0.1
335	SLV 15	434	-1497	6852	42.95	4.85	-0.51
335	SLV 16	434	-1497	6852	42.95	4.85	-0.51
336	SLU 1	468	-7	6366	-2.41	19.28	0.02
336	SLU 2	467	-7	6372	-2.4	19.23	0.02
336	SLU 3	476	-7	6567	-2.53	19.5	0.02
336	SLU 4	475	-7	6571	-2.52	19.47	0.02
336	SLU 5	471	-7	6511	-2.48	19.34	0.02
336	SLU 6	480	-7	6706	-2.61	19.61	0.02
336	SLU 7	480	-8	6710	-2.6	19.58	0.02
336	SLU 8	477	-7	6643	-2.57	19.49	0.02
336	SLU 9	476	-7	6647	-2.56	19.46	0.02
336	SLU 10	556	-8	7289	-2.68	23.16	0.02
336	SLU 11	566	-8	7484	-2.81	23.43	0.02
336	SLU 12	565	-8	7488	-2.8	23.4	0.02
336	SLU 13	561	-8	7428	-2.76	23.27	0.02
336	SLU 14	570	-9	7623	-2.89	23.54	0.02
336	SLU 15	569	-9	7627	-2.88	23.51	0.02
336	SLU 16	567	-9	7560	-2.85	23.42	0.02
336	SLU 17	566	-9	7564	-2.84	23.39	0.02
336	SLU 18	596	-9	7675	-2.81	24.89	0.02
336	SLU 19	595	-9	7679	-2.8	24.87	0.02
336	SLU 20	601	-9	7814	-2.89	25	0.02
336	SLU 21	600	-9	7818	-2.88	24.97	0.02
336	SLU 22	541	-8	7240	-2.73	22.38	0.02
336	SLU 23	540	-8	7246	-2.71	22.33	0.02
336	SLU 24	549	-8	7441	-2.84	22.6	0.02
336	SLU 25	548	-8	7445	-2.83	22.57	0.02
336	SLU 26	544	-8	7385	-2.79	22.44	0.02
336	SLU 27	554	-9	7580	-2.92	22.71	0.02
336	SLU 28	553	-9	7584	-2.91	22.68	0.02
336	SLU 29	550	-8	7517	-2.88	22.59	0.02
336	SLU 30	549	-8	7521	-2.88	22.56	0.02
336	SLU 31	630	-9	8163	-2.99	26.26	0.02
336	SLU 32	639	-9	8358	-3.12	26.53	0.02
336	SLU 33	638	-10	8362	-3.11	26.51	0.02
336	SLU 34	634	-9	8302	-3.07	26.37	0.02
336	SLU 35	643	-10	8497	-3.2	26.64	0.02
336	SLU 36	643	-10	8501	-3.19	26.61	0.02
336	SLU 37	640	-10	8434	-3.16	26.52	0.02
336	SLU 38	639	-10	8438	-3.16	26.49	0.02
336	SLU 39	670	-10	8549	-3.12	27.99	0.02
336	SLU 40	669	-10	8553	-3.12	27.97	0.02
336	SLU 41	674	-10	8688	-3.2	28.1	0.02
336	SLU 42	673	-10	8692	-3.2	28.07	0.02
336	SLU 43	583	-9	7976	-3.03	24	0.02
336	SLU 44	582	-9	7982	-3.02	23.95	0.02
336	SLU 45	591	-9	8177	-3.15	24.22	0.02
336	SLU 46	590	-9	8181	-3.14	24.19	0.02
336	SLU 47	586	-9	8121	-3.1	24.06	0.02
336	SLU 48	596	-9	8316	-3.23	24.33	0.02
336	SLU 49	595	-9	8320	-3.22	24.3	0.02
336	SLU 50	592	-9	8253	-3.19	24.21	0.02
336	SLU 51	591	-9	8257	-3.18	24.18	0.02
336	SLU 52	672	-10	8899	-3.29	27.88	0.02
336	SLU 53	681	-10	9094	-3.43	28.15	0.02
336	SLU 54	680	-10	9098	-3.42	28.12	0.02
336	SLU 55	676	-10	9038	-3.37	27.99	0.02
336	SLU 56	685	-10	9233	-3.5	28.26	0.02
336	SLU 57	685	-10	9237	-3.5	28.23	0.02
336	SLU 58	682	-10	9170	-3.47	28.14	0.02
336	SLU 59	681	-10	9174	-3.46	28.11	0.02
336	SLU 60	712	-10	9285	-3.43	29.61	0.03
336	SLU 61	711	-11	9289	-3.42	29.58	0.03
336	SLU 62	716	-11	9424	-3.51	29.72	0.03
336	SLU 63	715	-11	9428	-3.5	29.69	0.03
336	SLU 64	657	-10	8850	-3.34	27.1	0.02
336	SLU 65	655	-10	8856	-3.33	27.05	0.02
336	SLU 66	665	-10	9051	-3.46	27.32	0.02
336	SLU 67	664	-10	9055	-3.45	27.29	0.02
336	SLU 68	660	-10	8995	-3.41	27.16	0.02
336	SLU 69	669	-10	9190	-3.54	27.43	0.02
336	SLU 70	668	-10	9194	-3.53	27.4	0.02
336	SLU 71	666	-10	9127	-3.5	27.31	0.02
336	SLU 72	665	-10	9131	-3.49	27.28	0.02
336	SLU 73	745	-11	9773	-3.61	30.98	0.03
336	SLU 74	754	-11	9968	-3.74	31.25	0.03
336	SLU 75	753	-11	9972	-3.73	31.23	0.03
336	SLU 76	749	-11	9912	-3.69	31.09	0.03
336	SLU 77	759	-11	10107	-3.82	31.36	0.03
336	SLU 78	758	-11	10111	-3.81	31.33	0.03
336	SLU 79	755	-11	10044	-3.78	31.24	0.03
336	SLU 80	754	-11	10048	-3.77	31.21	0.03
336	SLU 81	785	-12	10159	-3.74	32.71	0.03

Nodo	Cont.	Reazione a traslazione			Reazione a rotazione		
Ind.	N.br.	x	y	z	x	y	z
336	SLU 82	784	-12	10163	-3.73	32.69	0.03
336	SLU 83	789	-12	10298	-3.82	32.82	0.03
336	SLU 84	788	-12	10302	-3.81	32.79	0.03
336	SLE RA 1	489	-7	6615	-2.5	20.16	0.02
336	SLE RA 2	488	-7	6620	-2.49	20.13	0.02
336	SLE RA 3	494	-8	6750	-2.58	20.31	0.02
336	SLE RA 4	494	-8	6752	-2.57	20.29	0.02
336	SLE RA 5	491	-8	6712	-2.55	20.2	0.02
336	SLE RA 6	497	-8	6842	-2.63	20.38	0.02
336	SLE RA 7	497	-8	6845	-2.63	20.36	0.02
336	SLE RA 8	495	-8	6801	-2.61	20.3	0.02
336	SLE RA 9	494	-8	6803	-2.6	20.29	0.02
336	SLE RA 10	548	-8	7231	-2.68	22.75	0.02
336	SLE RA 11	554	-8	7361	-2.77	22.93	0.02
336	SLE RA 12	554	-8	7364	-2.76	22.91	0.02
336	SLE RA 13	551	-8	7323	-2.73	22.82	0.02
336	SLE RA 14	557	-8	7453	-2.82	23	0.02
336	SLE RA 15	556	-8	7456	-2.81	22.98	0.02
336	SLE RA 16	555	-8	7412	-2.8	22.92	0.02
336	SLE RA 17	554	-8	7414	-2.79	22.91	0.02
336	SLE RA 18	574	-8	7489	-2.77	23.91	0.02
336	SLE RA 19	574	-8	7491	-2.76	23.89	0.02
336	SLE RA 20	577	-9	7581	-2.82	23.98	0.02
336	SLE RA 21	577	-9	7584	-2.82	23.96	0.02
336	SLE FR 1	489	-7	6615	-2.5	20.16	0.02
336	SLE FR 2	489	-7	6616	-2.5	20.16	0.02
336	SLE FR 3	490	-7	6652	-2.52	20.19	0.02
336	SLE FR 4	514	-8	6878	-2.58	21.28	0.02
336	SLE FR 5	516	-8	6914	-2.6	21.31	0.02
336	SLE FR 6	532	-8	7052	-2.64	22.03	0.02
336	SLE QP 1	489	-7	6615	-2.5	20.16	0.02
336	SLE QP 2	515	-8	6877	-2.58	21.29	0.02
336	SLD 1	1085	-4	7287	-5.17	48.52	0.02
336	SLD 2	1085	-4	7287	-5.17	48.52	0.02
336	SLD 3	931	-9	8660	-2.01	43.55	0.03
336	SLD 4	931	-9	8660	-2.01	43.55	0.03
336	SLD 5	920	0	4919	-8.14	37	0.01
336	SLD 6	920	0	4919	-8.14	37	0.01
336	SLD 7	406	-15	9494	2.38	20.42	0.03
336	SLD 8	406	-15	9494	2.38	20.42	0.03
336	SLD 9	624	-1	4261	-7.54	22.15	0
336	SLD 10	624	-1	4261	-7.54	22.15	0
336	SLD 11	110	-15	8836	2.98	5.57	0.03
336	SLD 12	110	-15	8836	2.98	5.57	0.03
336	SLD 13	98	-7	5095	-3.16	-0.98	0.01
336	SLD 14	98	-7	5095	-3.16	-0.98	0.01
336	SLD 15	-56	-11	6467	0	-5.95	0.02
336	SLD 16	-56	-11	6467	0	-5.95	0.02
336	SLV 1	1852	0	7798	-8.72	85.06	0.02
336	SLV 2	1852	0	7798	-8.72	85.06	0.02
336	SLV 3	1477	-10	11101	-1.15	72.82	0.04
336	SLV 4	1477	-10	11101	-1.15	72.82	0.04
336	SLV 5	1485	11	2144	-15.91	58.99	-0.01
336	SLV 6	1485	11	2144	-15.91	58.99	-0.01
336	SLV 7	234	-24	13154	9.34	18.17	0.05
336	SLV 8	234	-24	13154	9.34	18.17	0.05
336	SLV 9	795	9	601	-14.5	24.4	-0.02
336	SLV 10	795	9	601	-14.5	24.4	-0.02
336	SLV 11	-456	-26	11611	10.75	-16.42	0.05
336	SLV 12	-456	-26	11611	10.75	-16.42	0.05
336	SLV 13	-448	-5	2654	-4.01	-30.25	0
336	SLV 14	-448	-5	2654	-4.01	-30.25	0
336	SLV 15	-823	-16	5957	3.56	-42.49	0.02
336	SLV 16	-823	-16	5957	3.56	-42.49	0.02
337	SLU 1	343	7	5474	-8.96	30.92	0.01
337	SLU 2	343	7	5477	-8.96	30.9	0.01
337	SLU 3	348	7	5641	-9.34	31.74	0.01
337	SLU 4	348	7	5643	-9.34	31.73	0.01
337	SLU 5	345	7	5592	-9.22	31.41	0.01
337	SLU 6	351	7	5756	-9.6	32.25	0.01
337	SLU 7	350	7	5758	-9.6	32.24	0.01
337	SLU 8	348	7	5704	-9.48	31.94	0.01
337	SLU 9	348	7	5706	-9.48	31.93	0.01
337	SLU 10	415	8	6261	-10.11	36.42	0.01
337	SLU 11	421	8	6425	-10.49	37.26	0.01
337	SLU 12	420	8	6427	-10.48	37.25	0.01
337	SLU 13	417	8	6376	-10.36	36.94	0.01
337	SLU 14	423	8	6540	-10.75	37.77	0.01
337	SLU 15	422	8	6542	-10.74	37.76	0.01
337	SLU 16	420	8	6488	-10.63	37.47	0.01
337	SLU 17	420	8	6490	-10.63	37.46	0.01
337	SLU 18	446	8	6594	-10.6	38.81	0.01
337	SLU 19	446	8	6596	-10.6	38.8	0.01
337	SLU 20	449	8	6709	-10.86	39.32	0.01
337	SLU 21	448	8	6711	-10.86	39.31	0.01
337	SLU 22	401	8	6216	-10.17	35.77	0.01
337	SLU 23	400	8	6219	-10.17	35.75	0.01
337	SLU 24	406	8	6383	-10.55	36.59	0.01
337	SLU 25	406	8	6385	-10.55	36.58	0.01
337	SLU 26	403	8	6334	-10.43	36.27	0.01

Nodo	Cont.	Reazione a traslazione			Reazione a rotazione		
Ind.	N.br.	x	y	z	x	y	z
337	SLU 27	408	8	6498	-10.81	37.1	0.01
337	SLU 28	408	8	6500	-10.81	37.09	0.01
337	SLU 29	406	8	6446	-10.69	36.8	0.01
337	SLU 30	405	8	6448	-10.69	36.79	0.01
337	SLU 31	472	8	7003	-11.32	41.27	0.02
337	SLU 32	478	9	7167	-11.7	42.11	0.02
337	SLU 33	478	9	7169	-11.69	42.1	0.02
337	SLU 34	475	9	7118	-11.57	41.79	0.02
337	SLU 35	481	9	7282	-11.96	42.63	0.02
337	SLU 36	480	9	7284	-11.95	42.62	0.02
337	SLU 37	478	9	7230	-11.84	42.32	0.02
337	SLU 38	477	9	7232	-11.84	42.31	0.02
337	SLU 39	504	9	7335	-11.81	43.66	0.02
337	SLU 40	504	9	7337	-11.81	43.65	0.02
337	SLU 41	506	9	7451	-12.07	44.17	0.02
337	SLU 42	506	9	7453	-12.07	44.16	0.02
337	SLU 43	427	8	6862	-11.24	38.53	0.01
337	SLU 44	426	8	6865	-11.23	38.51	0.01
337	SLU 45	432	9	7029	-11.61	39.35	0.02
337	SLU 46	431	9	7031	-11.61	39.34	0.02
337	SLU 47	428	9	6980	-11.49	39.02	0.02
337	SLU 48	434	9	7144	-11.87	39.86	0.02
337	SLU 49	434	9	7146	-11.87	39.85	0.02
337	SLU 50	431	9	7092	-11.75	39.56	0.02
337	SLU 51	431	9	7094	-11.75	39.55	0.02
337	SLU 52	498	9	7649	-12.38	44.03	0.02
337	SLU 53	504	10	7813	-12.76	44.87	0.02
337	SLU 54	503	10	7815	-12.76	44.86	0.02
337	SLU 55	500	9	7764	-12.64	44.55	0.02
337	SLU 56	506	10	7928	-13.02	45.38	0.02
337	SLU 57	506	10	7930	-13.02	45.37	0.02
337	SLU 58	504	10	7876	-12.9	45.08	0.02
337	SLU 59	503	10	7878	-12.9	45.07	0.02
337	SLU 60	530	10	7981	-12.88	46.42	0.02
337	SLU 61	529	10	7983	-12.87	46.41	0.02
337	SLU 62	532	10	8097	-13.14	46.93	0.02
337	SLU 63	532	10	8099	-13.13	46.92	0.02
337	SLU 64	484	9	7603	-12.45	43.38	0.02
337	SLU 65	484	9	7607	-12.44	43.36	0.02
337	SLU 66	489	10	7771	-12.82	44.2	0.02
337	SLU 67	489	10	7773	-12.82	44.19	0.02
337	SLU 68	486	10	7722	-12.7	43.88	0.02
337	SLU 69	492	10	7886	-13.08	44.72	0.02
337	SLU 70	491	10	7888	-13.08	44.7	0.02
337	SLU 71	489	10	7834	-12.96	44.41	0.02
337	SLU 72	489	10	7836	-12.96	44.4	0.02
337	SLU 73	556	10	8391	-13.59	48.89	0.02
337	SLU 74	561	10	8554	-13.97	49.72	0.02
337	SLU 75	561	10	8556	-13.97	49.71	0.02
337	SLU 76	558	10	8506	-13.85	49.4	0.02
337	SLU 77	564	11	8670	-14.23	50.24	0.02
337	SLU 78	563	11	8672	-14.23	50.23	0.02
337	SLU 79	561	11	8618	-14.11	49.93	0.02
337	SLU 80	561	11	8620	-14.11	49.92	0.02
337	SLU 81	587	11	8723	-14.09	51.27	0.02
337	SLU 82	587	10	8725	-14.08	51.26	0.02
337	SLU 83	590	11	8838	-14.35	51.78	0.02
337	SLU 84	589	11	8840	-14.34	51.77	0.02
337	SLE RA 1	360	7	5686	-9.31	32.3	0.01
337	SLE RA 2	359	7	5688	-9.3	32.29	0.01
337	SLE RA 3	363	7	5797	-9.56	32.85	0.01
337	SLE RA 4	363	7	5799	-9.56	32.84	0.01
337	SLE RA 5	361	7	5765	-9.48	32.63	0.01
337	SLE RA 6	365	7	5874	-9.73	33.19	0.01
337	SLE RA 7	365	7	5875	-9.73	33.19	0.01
337	SLE RA 8	363	7	5839	-9.65	32.99	0.01
337	SLE RA 9	363	7	5841	-9.65	32.98	0.01
337	SLE RA 10	407	8	6211	-10.07	35.97	0.01
337	SLE RA 11	411	8	6320	-10.33	36.53	0.01
337	SLE RA 12	411	8	6321	-10.32	36.52	0.01
337	SLE RA 13	409	8	6287	-10.24	36.32	0.01
337	SLE RA 14	413	8	6397	-10.5	36.87	0.01
337	SLE RA 15	413	8	6398	-10.5	36.87	0.01
337	SLE RA 16	411	8	6362	-10.42	36.67	0.01
337	SLE RA 17	411	8	6363	-10.42	36.66	0.01
337	SLE RA 18	429	8	6432	-10.4	37.56	0.01
337	SLE RA 19	428	8	6434	-10.4	37.56	0.01
337	SLE RA 20	430	8	6509	-10.57	37.91	0.01
337	SLE RA 21	430	8	6510	-10.57	37.9	0.01
337	SLE FR 1	360	7	5686	-9.31	32.3	0.01
337	SLE FR 2	360	7	5686	-9.31	32.3	0.01
337	SLE FR 3	361	7	5716	-9.38	32.44	0.01
337	SLE FR 4	380	7	5910	-9.64	33.88	0.01
337	SLE FR 5	381	7	5940	-9.71	34.02	0.01
337	SLE FR 6	394	7	6059	-9.86	34.93	0.01
337	SLE QP 1	360	7	5686	-9.31	32.3	0.01
337	SLE QP 2	380	7	5910	-9.64	33.88	0.01
337	SLD 1	945	8	6207	-8.61	58.5	0.03
337	SLD 2	945	8	6207	-8.61	58.5	0.03
337	SLD 3	832	11	7192	-14.99	62.6	0.01

Nodo	Cont.	Reazione a traslazione			Reazione a rotazione		
Ind.	N.br.	x	y	z	x	y	z
337	SLD 4	832	11	7192	-14.99	62.6	0.01
337	SLD 5	721	3	4506	0.36	35.05	0.05
337	SLD 6	721	3	4506	0.36	35.05	0.05
337	SLD 7	344	13	7787	-20.93	48.71	-0.02
337	SLD 8	344	13	7787	-20.93	48.71	-0.02
337	SLD 9	417	1	4032	1.65	19.05	0.05
337	SLD 10	417	1	4032	1.65	19.05	0.05
337	SLD 11	40	12	7313	-19.63	32.71	-0.02
337	SLD 12	40	12	7313	-19.63	32.71	-0.02
337	SLD 13	-71	3	4628	-4.28	5.16	0.02
337	SLD 14	-71	3	4628	-4.28	5.16	0.02
337	SLD 15	-184	7	5612	-10.67	9.26	0
337	SLD 16	-184	7	5612	-10.67	9.26	0
337	SLV 1	1703	8	6578	-7.14	91.03	0.05
337	SLV 2	1703	8	6578	-7.14	91.03	0.05
337	SLV 3	1425	16	8948	-22.3	101.05	0
337	SLV 4	1425	16	8948	-22.3	101.05	0
337	SLV 5	1198	-4	2515	14.09	35.84	0.1
337	SLV 6	1198	-4	2515	14.09	35.84	0.1
337	SLV 7	273	21	10416	-36.42	69.21	-0.07
337	SLV 8	273	21	10416	-36.42	69.21	-0.07
337	SLV 9	488	-7	1403	17.14	-1.45	0.09
337	SLV 10	488	-7	1403	17.14	-1.45	0.09
337	SLV 11	-437	18	9304	-33.37	31.92	-0.08
337	SLV 12	-437	18	9304	-33.37	31.92	-0.08
337	SLV 13	-664	-2	2871	3.02	-33.28	0.02
337	SLV 14	-664	-2	2871	3.02	-33.28	0.02
337	SLV 15	-942	6	5242	-12.13	-23.27	-0.03
337	SLV 16	-942	6	5242	-12.13	-23.27	-0.03
338	SLU 1	29	19	4772	-15.53	-4.14	0
338	SLU 2	29	19	4774	-15.54	-4.16	0
338	SLU 3	24	20	4911	-16.17	-4.61	0
338	SLU 4	24	20	4912	-16.17	-4.62	0
338	SLU 5	24	19	4870	-15.97	-4.54	0
338	SLU 6	19	20	5006	-16.61	-4.99	0
338	SLU 7	19	20	5008	-16.61	-5	0
338	SLU 8	19	20	4963	-16.41	-4.9	0
338	SLU 9	19	20	4964	-16.41	-4.91	0
338	SLU 10	53	21	5457	-17.56	-3.82	0
338	SLU 11	48	22	5594	-18.19	-4.27	0
338	SLU 12	48	22	5595	-18.19	-4.28	0
338	SLU 13	48	22	5553	-17.99	-4.2	0
338	SLU 14	43	23	5690	-18.63	-4.65	0
338	SLU 15	43	23	5691	-18.63	-4.66	0
338	SLU 16	44	22	5646	-18.43	-4.55	0
338	SLU 17	44	22	5648	-18.43	-4.57	0
338	SLU 18	64	22	5748	-18.42	-3.65	0
338	SLU 19	64	22	5749	-18.42	-3.66	0
338	SLU 20	59	23	5844	-18.86	-4.03	0
338	SLU 21	59	23	5845	-18.86	-4.04	0
338	SLU 22	42	21	5412	-17.65	-4.35	0
338	SLU 23	41	21	5414	-17.65	-4.37	0
338	SLU 24	36	22	5550	-18.28	-4.82	0
338	SLU 25	36	22	5552	-18.29	-4.83	0
338	SLU 26	36	22	5509	-18.09	-4.74	0
338	SLU 27	31	23	5646	-18.72	-5.19	0
338	SLU 28	31	23	5647	-18.72	-5.2	0
338	SLU 29	32	22	5603	-18.52	-5.1	0
338	SLU 30	32	22	5604	-18.52	-5.11	0
338	SLU 31	66	24	6097	-19.67	-4.02	0
338	SLU 32	61	25	6234	-20.31	-4.47	0
338	SLU 33	61	25	6235	-20.31	-4.48	0
338	SLU 34	61	24	6192	-20.11	-4.4	0
338	SLU 35	56	25	6329	-20.74	-4.85	0
338	SLU 36	56	25	6330	-20.74	-4.86	0
338	SLU 37	56	25	6286	-20.54	-4.76	0
338	SLU 38	56	25	6287	-20.54	-4.77	0
338	SLU 39	77	25	6388	-20.53	-3.86	0
338	SLU 40	77	25	6389	-20.53	-3.87	0
338	SLU 41	72	25	6483	-20.97	-4.23	0
338	SLU 42	72	25	6484	-20.97	-4.25	0
338	SLU 43	34	24	5984	-19.47	-5.32	0
338	SLU 44	33	24	5986	-19.47	-5.34	0
338	SLU 45	28	24	6123	-20.11	-5.78	0
338	SLU 46	28	24	6124	-20.11	-5.8	0
338	SLU 47	28	24	6082	-19.91	-5.71	0
338	SLU 48	23	25	6219	-20.55	-6.16	0
338	SLU 49	23	25	6220	-20.55	-6.17	0
338	SLU 50	24	25	6176	-20.34	-6.07	0
338	SLU 51	24	25	6177	-20.35	-6.08	0
338	SLU 52	58	26	6670	-21.49	-4.99	0
338	SLU 53	53	27	6806	-22.13	-5.44	0
338	SLU 54	52	27	6808	-22.13	-5.45	0
338	SLU 55	53	27	6765	-21.93	-5.37	0
338	SLU 56	48	27	6902	-22.57	-5.82	0
338	SLU 57	47	27	6903	-22.57	-5.83	0
338	SLU 58	48	27	6859	-22.37	-5.73	0
338	SLU 59	48	27	6860	-22.37	-5.74	0
338	SLU 60	69	27	6960	-22.36	-4.83	0
338	SLU 61	68	27	6962	-22.36	-4.84	0

Nodo	Cont.	Reazione a traslazione			Reazione a rotazione		
Ind.	N.br.	x	y	z	x	y	z
338	SLU 62	64	28	7056	-22.79	-5.2	0
338	SLU 63	63	28	7057	-22.79	-5.21	0
338	SLU 64	46	26	6624	-21.58	-5.52	0
338	SLU 65	46	26	6626	-21.58	-5.54	0
338	SLU 66	41	27	6763	-22.22	-5.99	0
338	SLU 67	41	27	6764	-22.22	-6	0
338	SLU 68	41	27	6722	-22.02	-5.92	0
338	SLU 69	36	27	6858	-22.66	-6.37	0
338	SLU 70	36	27	6860	-22.66	-6.38	0
338	SLU 71	36	27	6815	-22.46	-6.28	0
338	SLU 72	36	27	6816	-22.46	-6.29	0
338	SLU 73	70	29	7309	-23.6	-5.2	0
338	SLU 74	65	29	7446	-24.24	-5.65	0
338	SLU 75	65	29	7447	-24.24	-5.66	0
338	SLU 76	65	29	7405	-24.04	-5.57	0
338	SLU 77	60	30	7542	-24.68	-6.02	0
338	SLU 78	60	30	7543	-24.68	-6.03	0
338	SLU 79	61	30	7498	-24.48	-5.93	0
338	SLU 80	61	30	7499	-24.48	-5.94	0
338	SLU 81	81	30	7600	-24.47	-5.03	0
338	SLU 82	81	30	7601	-24.47	-5.04	0
338	SLU 83	76	30	7695	-24.91	-5.41	0
338	SLU 84	76	30	7697	-24.91	-5.42	0
338	SLE RA 1	33	20	4955	-16.14	-4.2	0
338	SLE RA 2	33	20	4956	-16.14	-4.22	0
338	SLE RA 3	29	20	5047	-16.56	-4.51	0
338	SLE RA 4	29	20	5048	-16.56	-4.52	0
338	SLE RA 5	29	20	5020	-16.43	-4.47	0
338	SLE RA 6	26	20	5111	-16.85	-4.77	0
338	SLE RA 7	26	20	5112	-16.86	-4.77	0
338	SLE RA 8	26	20	5082	-16.72	-4.7	0
338	SLE RA 9	26	20	5083	-16.72	-4.71	0
338	SLE RA 10	49	21	5412	-17.49	-3.99	0
338	SLE RA 11	45	22	5503	-17.91	-4.29	0
338	SLE RA 12	45	22	5504	-17.91	-4.29	0
338	SLE RA 13	46	22	5475	-17.78	-4.24	0
338	SLE RA 14	42	22	5566	-18.2	-4.54	0
338	SLE RA 15	42	22	5567	-18.2	-4.54	0
338	SLE RA 16	43	22	5538	-18.07	-4.48	0
338	SLE RA 17	42	22	5538	-18.07	-4.48	0
338	SLE RA 18	56	22	5605	-18.06	-3.88	0
338	SLE RA 19	56	22	5606	-18.06	-3.88	0
338	SLE RA 20	53	22	5669	-18.35	-4.13	0
338	SLE RA 21	53	22	5670	-18.35	-4.13	0
338	SLE FR 1	33	20	4955	-16.14	-4.2	0
338	SLE FR 2	33	20	4955	-16.14	-4.2	0
338	SLE FR 3	31	20	4980	-16.25	-4.3	0
338	SLE FR 4	40	20	5150	-16.71	-4.11	0
338	SLE FR 5	38	20	5175	-16.83	-4.2	0
338	SLE FR 6	44	21	5280	-17.1	-4.04	0
338	SLE QP 1	33	20	4955	-16.14	-4.2	0
338	SLE QP 2	40	20	5150	-16.71	-4.1	0
338	SLD 1	602	20	4188	-14.76	22.21	0.01
338	SLD 2	602	20	4188	-14.76	22.21	0.01
338	SLD 3	497	29	4959	-25.41	17.2	0
338	SLD 4	497	29	4959	-25.41	17.2	0
338	SLD 5	368	7	3693	0.02	11.39	0.02
338	SLD 6	368	7	3693	0.02	11.39	0.02
338	SLD 7	18	36	6261	-35.48	-5.32	-0.02
338	SLD 8	18	36	6261	-35.48	-5.32	-0.02
338	SLD 9	62	4	4039	2.05	-2.89	0.02
338	SLD 10	62	4	4039	2.05	-2.89	0.02
338	SLD 11	-288	34	6607	-33.45	-19.6	-0.02
338	SLD 12	-288	34	6607	-33.45	-19.6	-0.02
338	SLD 13	-417	12	5341	-8.02	-25.4	0
338	SLD 14	-417	12	5341	-8.02	-25.4	0
338	SLD 15	-522	21	6112	-18.67	-30.42	-0.01
338	SLD 16	-522	21	6112	-18.67	-30.42	-0.01
338	SLV 1	1356	19	2870	-12.07	57.54	0.03
338	SLV 2	1356	19	2870	-12.07	57.54	0.03
338	SLV 3	1097	40	4725	-37.24	45.11	0
338	SLV 4	1097	40	4725	-37.24	45.11	0
338	SLV 5	829	-12	1652	22.86	33.23	0.06
338	SLV 6	829	-12	1652	22.86	33.23	0.06
338	SLV 7	-37	58	7836	-61.06	-8.18	-0.05
338	SLV 8	-37	58	7836	-61.06	-8.18	-0.05
338	SLV 9	117	-18	2464	27.63	-0.03	0.05
338	SLV 10	117	-18	2464	27.63	-0.03	0.05
338	SLV 11	-749	52	8648	-56.29	-41.44	-0.06
338	SLV 12	-749	52	8648	-56.29	-41.44	-0.06
338	SLV 13	-1017	0	5575	3.81	-53.32	0
338	SLV 14	-1017	0	5575	3.81	-53.32	0
338	SLV 15	-1277	21	7430	-21.36	-65.75	-0.03
338	SLV 16	-1277	21	7430	-21.36	-65.75	-0.03
339	SLU 1	217	27	4145	-20.55	21.67	-0.03
339	SLU 2	217	27	4146	-20.55	21.67	-0.03
339	SLU 3	221	28	4259	-21.39	22.28	-0.03
339	SLU 4	220	28	4259	-21.39	22.28	-0.03
339	SLU 5	218	28	4224	-21.13	22.03	-0.03
339	SLU 6	222	29	4337	-21.96	22.64	-0.03

Nodo	Cont.	Reazione a traslazione			Reazione a rotazione		
Ind.	N.br.	x	y	z	x	y	z
339	SLU 7	222	29	4338	-21.96	22.64	-0.03
339	SLU 8	219	28	4301	-21.69	22.39	-0.03
339	SLU 9	219	28	4302	-21.7	22.39	-0.03
339	SLU 10	265	30	4739	-23.23	25.6	-0.03
339	SLU 11	269	31	4852	-24.07	26.21	-0.03
339	SLU 12	269	31	4853	-24.07	26.21	-0.03
339	SLU 13	266	31	4818	-23.81	25.96	-0.03
339	SLU 14	270	32	4930	-24.64	26.57	-0.03
339	SLU 15	270	32	4931	-24.64	26.57	-0.03
339	SLU 16	268	32	4894	-24.37	26.32	-0.03
339	SLU 17	268	32	4895	-24.38	26.32	-0.03
339	SLU 18	286	32	4992	-24.38	27.29	-0.03
339	SLU 19	286	32	4993	-24.38	27.29	-0.03
339	SLU 20	287	33	5071	-24.95	27.65	-0.03
339	SLU 21	287	33	5071	-24.95	27.65	-0.03
339	SLU 22	256	30	4694	-23.34	25.16	-0.03
339	SLU 23	256	30	4695	-23.35	25.16	-0.03
339	SLU 24	259	32	4808	-24.18	25.77	-0.03
339	SLU 25	259	32	4808	-24.19	25.77	-0.03
339	SLU 26	257	31	4773	-23.92	25.52	-0.03
339	SLU 27	261	32	4886	-24.76	26.13	-0.03
339	SLU 28	260	32	4886	-24.76	26.13	-0.03
339	SLU 29	258	32	4850	-24.49	25.88	-0.03
339	SLU 30	258	32	4851	-24.49	25.88	-0.03
339	SLU 31	304	34	5288	-26.03	29.1	-0.03
339	SLU 32	308	35	5401	-26.86	29.7	-0.04
339	SLU 33	308	35	5402	-26.87	29.7	-0.04
339	SLU 34	305	35	5367	-26.6	29.46	-0.04
339	SLU 35	309	36	5479	-27.44	30.07	-0.04
339	SLU 36	309	36	5480	-27.44	30.07	-0.04
339	SLU 37	307	35	5443	-27.17	29.82	-0.04
339	SLU 38	306	35	5444	-27.17	29.82	-0.04
339	SLU 39	325	35	5541	-27.17	30.78	-0.04
339	SLU 40	325	35	5542	-27.18	30.78	-0.04
339	SLU 41	326	36	5619	-27.75	31.14	-0.04
339	SLU 42	326	36	5620	-27.75	31.14	-0.04
339	SLU 43	269	34	5200	-25.75	26.97	-0.03
339	SLU 44	269	34	5201	-25.76	26.97	-0.03
339	SLU 45	272	35	5314	-26.59	27.58	-0.04
339	SLU 46	272	35	5315	-26.59	27.58	-0.04
339	SLU 47	270	34	5280	-26.33	27.33	-0.04
339	SLU 48	273	35	5392	-27.16	27.94	-0.04
339	SLU 49	273	35	5393	-27.17	27.94	-0.04
339	SLU 50	271	35	5356	-26.9	27.69	-0.04
339	SLU 51	271	35	5357	-26.9	27.69	-0.04
339	SLU 52	317	37	5795	-28.44	30.9	-0.04
339	SLU 53	321	38	5907	-29.27	31.51	-0.04
339	SLU 54	321	38	5908	-29.27	31.51	-0.04
339	SLU 55	318	38	5873	-29.01	31.26	-0.04
339	SLU 56	322	39	5985	-29.84	31.87	-0.04
339	SLU 57	322	39	5986	-29.85	31.87	-0.04
339	SLU 58	319	39	5950	-29.58	31.63	-0.04
339	SLU 59	319	39	5951	-29.58	31.63	-0.04
339	SLU 60	338	39	6048	-29.58	32.59	-0.04
339	SLU 61	338	39	6049	-29.58	32.59	-0.04
339	SLU 62	339	39	6126	-30.15	32.95	-0.04
339	SLU 63	339	39	6127	-30.16	32.95	-0.04
339	SLU 64	308	37	5749	-28.55	30.46	-0.04
339	SLU 65	308	37	5750	-28.56	30.46	-0.04
339	SLU 66	311	38	5863	-29.39	31.07	-0.04
339	SLU 67	311	38	5864	-29.39	31.07	-0.04
339	SLU 68	309	38	5828	-29.13	30.82	-0.04
339	SLU 69	312	39	5941	-29.96	31.43	-0.04
339	SLU 70	312	39	5942	-29.96	31.43	-0.04
339	SLU 71	310	39	5905	-29.69	31.18	-0.04
339	SLU 72	310	39	5906	-29.7	31.18	-0.04
339	SLU 73	356	41	6344	-31.24	34.4	-0.04
339	SLU 74	360	42	6456	-32.07	35.01	-0.04
339	SLU 75	360	42	6457	-32.07	35.01	-0.04
339	SLU 76	357	41	6422	-31.81	34.76	-0.04
339	SLU 77	361	43	6534	-32.64	35.37	-0.04
339	SLU 78	361	43	6535	-32.65	35.37	-0.04
339	SLU 79	358	42	6499	-32.37	35.12	-0.04
339	SLU 80	358	42	6499	-32.38	35.12	-0.04
339	SLU 81	377	42	6597	-32.38	36.08	-0.04
339	SLU 82	377	42	6597	-32.38	36.08	-0.04
339	SLU 83	378	43	6675	-32.95	36.44	-0.04
339	SLU 84	378	43	6676	-32.95	36.45	-0.04
339	SLE RA 1	228	28	4302	-21.35	22.66	-0.03
339	SLE RA 2	228	28	4303	-21.35	22.67	-0.03
339	SLE RA 3	231	29	4378	-21.9	23.07	-0.03
339	SLE RA 4	231	29	4378	-21.91	23.07	-0.03
339	SLE RA 5	229	28	4355	-21.73	22.91	-0.03
339	SLE RA 6	231	29	4430	-22.29	23.31	-0.03
339	SLE RA 7	231	29	4430	-22.29	23.31	-0.03
339	SLE RA 8	230	29	4406	-22.11	23.15	-0.03
339	SLE RA 9	230	29	4406	-22.11	23.15	-0.03
339	SLE RA 10	260	30	4698	-23.14	25.29	-0.03
339	SLE RA 11	263	31	4773	-23.69	25.69	-0.03
339	SLE RA 12	263	31	4774	-23.69	25.69	-0.03

Nodo	Cont.	Reazione a traslazione			Reazione a rotazione		
Ind.	N.br.	x	y	z	x	y	z
339	SLE RA 13	261	31	4750	-23.52	25.53	-0.03
339	SLE RA 14	263	31	4825	-24.07	25.93	-0.03
339	SLE RA 15	263	31	4826	-24.08	25.93	-0.03
339	SLE RA 16	262	31	4801	-23.9	25.77	-0.03
339	SLE RA 17	262	31	4802	-23.9	25.77	-0.03
339	SLE RA 18	274	31	4867	-23.9	26.41	-0.03
339	SLE RA 19	274	31	4867	-23.9	26.41	-0.03
339	SLE RA 20	275	32	4919	-24.28	26.65	-0.03
339	SLE RA 21	275	32	4919	-24.28	26.65	-0.03
339	SLE FR 1	228	28	4302	-21.35	22.66	-0.03
339	SLE FR 2	228	28	4302	-21.35	22.66	-0.03
339	SLE FR 3	229	28	4322	-21.5	22.76	-0.03
339	SLE FR 4	242	29	4471	-22.11	23.79	-0.03
339	SLE FR 5	242	29	4492	-22.26	23.89	-0.03
339	SLE FR 6	251	29	4584	-22.62	24.54	-0.03
339	SLE QP 1	228	28	4302	-21.35	22.66	-0.03
339	SLE QP 2	242	29	4471	-22.11	23.79	-0.03
339	SLD 1	854	27	3742	-19.21	50.48	-0.02
339	SLD 2	854	27	3742	-19.21	50.48	-0.02
339	SLD 3	782	41	4363	-33.66	53.73	-0.03
339	SLD 4	782	41	4363	-33.66	53.73	-0.03
339	SLD 5	535	6	3311	0.67	26.87	-0.01
339	SLD 6	535	6	3311	0.67	26.87	-0.01
339	SLD 7	295	55	5381	-47.49	37.7	-0.04
339	SLD 8	295	55	5381	-47.49	37.7	-0.04
339	SLD 9	190	3	3562	3.27	9.88	-0.01
339	SLD 10	190	3	3562	3.27	9.88	-0.01
339	SLD 11	-51	52	5632	-44.9	20.71	-0.05
339	SLD 12	-51	52	5632	-44.9	20.71	-0.05
339	SLD 13	-297	16	4579	-10.56	-6.15	-0.03
339	SLD 14	-297	16	4579	-10.56	-6.15	-0.03
339	SLD 15	-370	31	5200	-25.01	-2.9	-0.04
339	SLD 16	-370	31	5200	-25.01	-2.9	-0.04
339	SLV 1	1673	24	2742	-15.25	85.79	0
339	SLV 2	1673	24	2742	-15.25	85.79	0
339	SLV 3	1493	59	4237	-49.35	93.77	-0.02
339	SLV 4	1493	59	4237	-49.35	93.77	-0.02
339	SLV 5	944	-25	1686	31.67	30.29	0.02
339	SLV 6	944	-25	1686	31.67	30.29	0.02
339	SLV 7	345	90	6668	-82	56.88	-0.06
339	SLV 8	345	90	6668	-82	56.88	-0.06
339	SLV 9	140	-33	2275	37.78	-9.3	0
339	SLV 10	140	-33	2275	37.78	-9.3	0
339	SLV 11	-460	83	7257	-75.89	17.29	-0.07
339	SLV 12	-460	83	7257	-75.89	17.29	-0.07
339	SLV 13	-1009	-1	4706	5.13	-46.19	-0.03
339	SLV 14	-1009	-1	4706	5.13	-46.19	-0.03
339	SLV 15	-1189	34	6200	-28.97	-38.21	-0.06
339	SLV 16	-1189	34	6200	-28.97	-38.21	-0.06
340	SLU 1	210	30	3715	-23.31	4.29	-0.07
340	SLU 2	209	30	3716	-23.32	4.29	-0.07
340	SLU 3	214	32	3812	-24.26	4.27	-0.07
340	SLU 4	213	32	3813	-24.27	4.27	-0.07
340	SLU 5	211	31	3782	-23.97	4.21	-0.07
340	SLU 6	215	32	3878	-24.91	4.19	-0.07
340	SLU 7	215	32	3879	-24.91	4.19	-0.07
340	SLU 8	212	32	3848	-24.61	4.14	-0.07
340	SLU 9	212	32	3848	-24.61	4.14	-0.07
340	SLU 10	253	34	4247	-26.36	5.51	-0.08
340	SLU 11	257	36	4343	-27.3	5.49	-0.08
340	SLU 12	257	36	4344	-27.31	5.49	-0.08
340	SLU 13	255	35	4314	-27.01	5.44	-0.08
340	SLU 14	259	36	4410	-27.95	5.42	-0.08
340	SLU 15	259	36	4410	-27.95	5.42	-0.08
340	SLU 16	256	36	4379	-27.64	5.36	-0.08
340	SLU 17	256	36	4380	-27.65	5.36	-0.08
340	SLU 18	272	36	4474	-27.65	6.04	-0.08
340	SLU 19	272	36	4475	-27.66	6.04	-0.08
340	SLU 20	274	37	4540	-28.3	5.96	-0.08
340	SLU 21	274	37	4541	-28.3	5.96	-0.08
340	SLU 22	246	34	4202	-26.48	5.18	-0.08
340	SLU 23	246	34	4203	-26.49	5.18	-0.08
340	SLU 24	250	36	4299	-27.43	5.16	-0.08
340	SLU 25	250	36	4299	-27.44	5.16	-0.08
340	SLU 26	247	35	4269	-27.14	5.1	-0.08
340	SLU 27	251	37	4365	-28.08	5.09	-0.08
340	SLU 28	251	37	4366	-28.09	5.08	-0.08
340	SLU 29	249	36	4334	-27.78	5.03	-0.08
340	SLU 30	249	36	4335	-27.78	5.03	-0.08
340	SLU 31	290	38	4734	-29.53	6.4	-0.08
340	SLU 32	294	40	4830	-30.47	6.39	-0.09
340	SLU 33	294	40	4831	-30.48	6.38	-0.09
340	SLU 34	291	39	4800	-30.18	6.33	-0.09
340	SLU 35	295	41	4896	-31.12	6.31	-0.09
340	SLU 36	295	41	4897	-31.12	6.31	-0.09
340	SLU 37	293	40	4866	-30.81	6.26	-0.09
340	SLU 38	293	40	4866	-30.82	6.25	-0.09
340	SLU 39	309	40	4961	-30.82	6.93	-0.09
340	SLU 40	309	40	4961	-30.83	6.93	-0.09
340	SLU 41	310	41	5027	-31.47	6.86	-0.09

Nodo	Cont.	Reazione a traslazione			Reazione a rotazione		
Ind.	N.br.	x	y	z	x	y	z
340	SLU 42	310	41	5028	-31.48	6.85	-0.09
340	SLU 43	260	38	4663	-29.22	5.27	-0.08
340	SLU 44	260	38	4664	-29.23	5.27	-0.08
340	SLU 45	264	39	4760	-30.17	5.25	-0.09
340	SLU 46	264	39	4761	-30.17	5.25	-0.09
340	SLU 47	261	39	4730	-29.87	5.19	-0.09
340	SLU 48	265	40	4826	-30.81	5.18	-0.09
340	SLU 49	265	40	4827	-30.82	5.17	-0.09
340	SLU 50	263	40	4795	-30.51	5.12	-0.09
340	SLU 51	263	40	4796	-30.52	5.12	-0.09
340	SLU 52	304	42	5195	-32.27	6.49	-0.09
340	SLU 53	308	43	5291	-33.21	6.47	-0.09
340	SLU 54	308	43	5292	-33.21	6.47	-0.09
340	SLU 55	305	43	5261	-32.91	6.42	-0.09
340	SLU 56	309	44	5357	-33.85	6.4	-0.1
340	SLU 57	309	44	5358	-33.86	6.4	-0.1
340	SLU 58	307	44	5327	-33.55	6.35	-0.1
340	SLU 59	306	44	5327	-33.56	6.34	-0.1
340	SLU 60	323	44	5422	-33.56	7.02	-0.1
340	SLU 61	323	44	5423	-33.56	7.02	-0.1
340	SLU 62	324	45	5488	-34.2	6.95	-0.1
340	SLU 63	324	45	5489	-34.21	6.94	-0.1
340	SLU 64	296	42	5150	-32.39	6.17	-0.09
340	SLU 65	296	42	5151	-32.4	6.16	-0.09
340	SLU 66	300	43	5247	-33.34	6.14	-0.1
340	SLU 67	300	43	5247	-33.34	6.14	-0.1
340	SLU 68	298	43	5217	-33.05	6.09	-0.09
340	SLU 69	302	44	5313	-33.99	6.07	-0.1
340	SLU 70	302	44	5313	-33.99	6.07	-0.1
340	SLU 71	299	44	5282	-33.68	6.01	-0.1
340	SLU 72	299	44	5283	-33.69	6.01	-0.1
340	SLU 73	340	46	5682	-35.44	7.39	-0.1
340	SLU 74	344	47	5778	-36.38	7.37	-0.1
340	SLU 75	344	47	5778	-36.38	7.37	-0.1
340	SLU 76	342	47	5748	-36.08	7.31	-0.1
340	SLU 77	346	48	5844	-37.02	7.29	-0.11
340	SLU 78	346	48	5845	-37.03	7.29	-0.11
340	SLU 79	343	48	5813	-36.72	7.24	-0.1
340	SLU 80	343	48	5814	-36.73	7.24	-0.1
340	SLU 81	359	48	5909	-36.73	7.91	-0.1
340	SLU 82	359	48	5909	-36.73	7.91	-0.1
340	SLU 83	360	49	5975	-37.38	7.84	-0.11
340	SLU 84	360	49	5975	-37.38	7.84	-0.11
340	SLE RA 1	220	31	3854	-24.22	4.55	-0.07
340	SLE RA 2	220	31	3855	-24.22	4.54	-0.07
340	SLE RA 3	223	32	3919	-24.85	4.53	-0.07
340	SLE RA 4	223	32	3919	-24.85	4.53	-0.07
340	SLE RA 5	221	32	3899	-24.66	4.49	-0.07
340	SLE RA 6	224	33	3963	-25.28	4.48	-0.07
340	SLE RA 7	224	33	3963	-25.29	4.48	-0.07
340	SLE RA 8	222	33	3943	-25.08	4.45	-0.07
340	SLE RA 9	222	33	3943	-25.08	4.44	-0.07
340	SLE RA 10	249	34	4209	-26.25	5.36	-0.08
340	SLE RA 11	252	35	4273	-26.88	5.35	-0.08
340	SLE RA 12	252	35	4273	-26.88	5.35	-0.08
340	SLE RA 13	250	35	4253	-26.68	5.31	-0.08
340	SLE RA 14	253	36	4317	-27.31	5.3	-0.08
340	SLE RA 15	253	36	4318	-27.31	5.3	-0.08
340	SLE RA 16	251	35	4297	-27.11	5.26	-0.08
340	SLE RA 17	251	35	4297	-27.11	5.26	-0.08
340	SLE RA 18	262	35	4360	-27.11	5.71	-0.08
340	SLE RA 19	262	35	4361	-27.11	5.71	-0.08
340	SLE RA 20	263	36	4404	-27.54	5.66	-0.08
340	SLE RA 21	263	36	4405	-27.55	5.66	-0.08
340	SLE FR 1	220	31	3854	-24.22	4.55	-0.07
340	SLE FR 2	220	31	3854	-24.22	4.55	-0.07
340	SLE FR 3	220	32	3872	-24.39	4.53	-0.07
340	SLE FR 4	233	33	4006	-25.09	4.9	-0.07
340	SLE FR 5	233	33	4024	-25.26	4.88	-0.07
340	SLE FR 6	241	33	4107	-25.66	5.13	-0.07
340	SLE QP 1	220	31	3854	-24.22	4.55	-0.07
340	SLE QP 2	233	33	4006	-25.09	4.9	-0.07
340	SLD 1	884	29	3413	-21.63	34.22	-0.04
340	SLD 2	884	29	3413	-21.63	34.22	-0.04
340	SLD 3	809	48	3939	-38.45	30.8	-0.08
340	SLD 4	809	48	3939	-38.45	30.8	-0.08
340	SLD 5	541	4	3030	1.46	18.88	0
340	SLD 6	541	4	3030	1.46	18.88	0
340	SLD 7	293	65	4784	-54.61	7.48	-0.13
340	SLD 8	293	65	4784	-54.61	7.48	-0.13
340	SLD 9	172	1	3228	4.44	2.32	-0.01
340	SLD 10	172	1	3228	4.44	2.32	-0.01
340	SLD 11	-76	61	4982	-51.63	-9.09	-0.14
340	SLD 12	-76	61	4982	-51.63	-9.09	-0.14
340	SLD 13	-344	18	4073	-11.72	-21	-0.07
340	SLD 14	-344	18	4073	-11.72	-21	-0.07
340	SLD 15	-419	36	4599	-28.54	-24.43	-0.1
340	SLD 16	-419	36	4599	-28.54	-24.43	-0.1
340	SLV 1	1755	25	2600	-16.91	73.47	0
340	SLV 2	1755	25	2600	-16.91	73.47	0

Nodo	Cont.	Reazione a traslazione			Reazione a rotazione		
Ind.	N.br.	x	y	z	x	y	z
340	SLV 3	1571	68	3865	-56.58	64.98	-0.09
340	SLV 4	1571	68	3865	-56.58	64.98	-0.09
340	SLV 5	968	-35	1665	37.52	38.33	0.09
340	SLV 6	968	-35	1665	37.52	38.33	0.09
340	SLV 7	355	108	5883	-94.69	10.06	-0.21
340	SLV 8	355	108	5883	-94.69	10.06	-0.21
340	SLV 9	110	-43	2129	44.52	-0.27	0.07
340	SLV 10	110	-43	2129	44.52	-0.27	0.07
340	SLV 11	-503	100	6347	-87.69	-28.54	-0.23
340	SLV 12	-503	100	6347	-87.69	-28.54	-0.23
340	SLV 13	-1106	-3	4147	6.41	-55.19	-0.06
340	SLV 14	-1106	-3	4147	6.41	-55.19	-0.06
340	SLV 15	-1290	40	5413	-33.26	-63.67	-0.15
340	SLV 16	-1290	40	5413	-33.26	-63.67	-0.15
341	SLU 1	507	31	3490	-23.75	30.13	-0.09
341	SLU 2	507	31	3491	-23.76	30.13	-0.09
341	SLU 3	522	32	3578	-24.72	31.12	-0.1
341	SLU 4	522	32	3578	-24.73	31.13	-0.1
341	SLU 5	516	31	3550	-24.42	30.75	-0.1
341	SLU 6	532	33	3638	-25.38	31.74	-0.1
341	SLU 7	532	33	3638	-25.38	31.75	-0.1
341	SLU 8	525	32	3609	-25.07	31.37	-0.1
341	SLU 9	525	32	3610	-25.08	31.37	-0.1
341	SLU 10	592	35	3990	-26.85	35.07	-0.11
341	SLU 11	608	36	4077	-27.81	36.05	-0.11
341	SLU 12	608	36	4078	-27.81	36.06	-0.11
341	SLU 13	601	35	4050	-27.51	35.68	-0.11
341	SLU 14	617	37	4137	-28.47	36.67	-0.11
341	SLU 15	617	37	4137	-28.47	36.68	-0.11
341	SLU 16	611	36	4109	-28.16	36.3	-0.11
341	SLU 17	611	36	4109	-28.16	36.3	-0.11
341	SLU 18	628	36	4203	-28.16	37.17	-0.11
341	SLU 19	628	36	4204	-28.17	37.18	-0.11
341	SLU 20	638	37	4263	-28.82	37.79	-0.11
341	SLU 21	638	37	4263	-28.83	37.79	-0.11
341	SLU 22	585	35	3944	-26.98	34.75	-0.11
341	SLU 23	585	35	3945	-26.99	34.76	-0.11
341	SLU 24	601	36	4032	-27.94	35.74	-0.11
341	SLU 25	601	36	4033	-27.95	35.75	-0.11
341	SLU 26	595	36	4005	-27.65	35.37	-0.11
341	SLU 27	610	37	4092	-28.6	36.36	-0.11
341	SLU 28	611	37	4092	-28.61	36.37	-0.11
341	SLU 29	604	36	4063	-28.29	35.99	-0.11
341	SLU 30	604	36	4064	-28.3	35.99	-0.11
341	SLU 31	670	39	4444	-30.08	39.69	-0.12
341	SLU 32	686	40	4532	-31.03	40.67	-0.12
341	SLU 33	686	40	4532	-31.04	40.68	-0.12
341	SLU 34	680	40	4504	-30.74	40.31	-0.12
341	SLU 35	696	41	4591	-31.69	41.29	-0.12
341	SLU 36	696	41	4591	-31.7	41.3	-0.12
341	SLU 37	689	40	4563	-31.38	40.92	-0.12
341	SLU 38	689	40	4563	-31.39	40.92	-0.12
341	SLU 39	707	40	4658	-31.39	41.79	-0.12
341	SLU 40	707	40	4658	-31.4	41.8	-0.12
341	SLU 41	716	41	4717	-32.05	42.41	-0.13
341	SLU 42	716	41	4718	-32.05	42.42	-0.13
341	SLU 43	631	38	4381	-29.77	37.58	-0.12
341	SLU 44	632	38	4382	-29.78	37.59	-0.12
341	SLU 45	647	40	4469	-30.74	38.58	-0.12
341	SLU 46	647	40	4470	-30.74	38.58	-0.12
341	SLU 47	641	39	4442	-30.44	38.21	-0.12
341	SLU 48	657	40	4529	-31.4	39.2	-0.12
341	SLU 49	657	40	4529	-31.4	39.2	-0.12
341	SLU 50	650	40	4501	-31.09	38.82	-0.12
341	SLU 51	650	40	4501	-31.09	38.82	-0.12
341	SLU 52	717	42	4881	-32.87	42.52	-0.13
341	SLU 53	733	44	4969	-33.83	43.51	-0.13
341	SLU 54	733	44	4969	-33.83	43.51	-0.13
341	SLU 55	726	43	4941	-33.53	43.14	-0.13
341	SLU 56	742	44	5028	-34.48	44.13	-0.14
341	SLU 57	742	44	5029	-34.49	44.13	-0.14
341	SLU 58	736	44	5000	-34.18	43.75	-0.13
341	SLU 59	736	44	5000	-34.18	43.75	-0.13
341	SLU 60	753	44	5095	-34.18	44.63	-0.13
341	SLU 61	753	44	5095	-34.19	44.63	-0.13
341	SLU 62	763	45	5154	-34.84	45.24	-0.14
341	SLU 63	763	45	5155	-34.85	45.25	-0.14
341	SLU 64	710	42	4836	-33	42.2	-0.13
341	SLU 65	710	42	4836	-33.01	42.21	-0.13
341	SLU 66	726	44	4923	-33.96	43.2	-0.13
341	SLU 67	726	44	4924	-33.97	43.2	-0.13
341	SLU 68	720	43	4896	-33.67	42.83	-0.13
341	SLU 69	735	45	4983	-34.62	43.82	-0.14
341	SLU 70	736	45	4983	-34.63	43.82	-0.14
341	SLU 71	729	44	4955	-34.31	43.44	-0.13
341	SLU 72	729	44	4955	-34.32	43.44	-0.13
341	SLU 73	795	47	5336	-36.1	47.14	-0.14
341	SLU 74	811	48	5423	-37.05	48.13	-0.15
341	SLU 75	811	48	5423	-37.06	48.13	-0.15
341	SLU 76	805	47	5395	-36.76	47.76	-0.14

Nodo	Cont.	Reazione a traslazione			Reazione a rotazione		
Ind.	N.br.	x	y	z	x	y	z
341	SLU 77	821	49	5482	-37.71	48.75	-0.15
341	SLU 78	821	49	5483	-37.72	48.75	-0.15
341	SLU 79	814	48	5454	-37.4	48.37	-0.15
341	SLU 80	814	48	5455	-37.41	48.38	-0.15
341	SLU 81	832	48	5549	-37.41	49.25	-0.15
341	SLU 82	832	48	5549	-37.42	49.25	-0.15
341	SLU 83	841	49	5609	-38.07	49.87	-0.15
341	SLU 84	841	49	5609	-38.07	49.87	-0.15
341	SLE RA 1	529	32	3620	-24.67	31.45	-0.1
341	SLE RA 2	529	32	3620	-24.68	31.45	-0.1
341	SLE RA 3	540	33	3678	-25.32	32.11	-0.1
341	SLE RA 4	540	33	3679	-25.32	32.11	-0.1
341	SLE RA 5	535	32	3660	-25.12	31.86	-0.1
341	SLE RA 6	546	33	3718	-25.76	32.52	-0.1
341	SLE RA 7	546	33	3718	-25.76	32.53	-0.1
341	SLE RA 8	542	33	3699	-25.55	32.27	-0.1
341	SLE RA 9	542	33	3700	-25.56	32.28	-0.1
341	SLE RA 10	586	34	3953	-26.74	34.74	-0.11
341	SLE RA 11	596	35	4011	-27.38	35.4	-0.11
341	SLE RA 12	596	35	4012	-27.38	35.4	-0.11
341	SLE RA 13	592	35	3993	-27.18	35.15	-0.11
341	SLE RA 14	603	36	4051	-27.82	35.81	-0.11
341	SLE RA 15	603	36	4051	-27.82	35.81	-0.11
341	SLE RA 16	598	36	4032	-27.61	35.56	-0.11
341	SLE RA 17	598	36	4032	-27.61	35.56	-0.11
341	SLE RA 18	610	36	4095	-27.61	36.14	-0.11
341	SLE RA 19	610	36	4096	-27.62	36.15	-0.11
341	SLE RA 20	616	36	4135	-28.05	36.56	-0.11
341	SLE RA 21	616	36	4135	-28.06	36.56	-0.11
341	SLE FR 1	529	32	3620	-24.67	31.45	-0.1
341	SLE FR 2	529	32	3620	-24.67	31.45	-0.1
341	SLE FR 3	531	32	3636	-24.85	31.61	-0.1
341	SLE FR 4	553	33	3763	-25.56	32.86	-0.1
341	SLE FR 5	556	33	3778	-25.73	33.02	-0.1
341	SLE FR 6	570	34	3858	-26.14	33.8	-0.1
341	SLE QP 1	529	32	3620	-24.67	31.45	-0.1
341	SLE QP 2	553	33	3763	-25.56	32.86	-0.1
341	SLD 1	1172	30	3824	-22.24	61.25	-0.09
341	SLD 2	1172	30	3824	-22.24	61.25	-0.09
341	SLD 3	1275	49	4295	-39.51	66.45	-0.15
341	SLD 4	1275	49	4295	-39.51	66.45	-0.15
341	SLD 5	582	3	3068	1.63	33.49	-0.01
341	SLD 6	582	3	3068	1.63	33.49	-0.01
341	SLD 7	926	66	4636	-55.93	50.82	-0.2
341	SLD 8	926	66	4636	-55.93	50.82	-0.2
341	SLD 9	180	0	2890	4.82	14.9	0
341	SLD 10	180	0	2890	4.82	14.9	0
341	SLD 11	524	62	4457	-52.74	32.22	-0.19
341	SLD 12	524	62	4457	-52.74	32.22	-0.19
341	SLD 13	-168	17	3230	-11.6	-0.73	-0.05
341	SLD 14	-168	17	3230	-11.6	-0.73	-0.05
341	SLD 15	-65	36	3701	-28.87	4.46	-0.11
341	SLD 16	-65	36	3701	-28.87	4.46	-0.11
341	SLV 1	1991	25	3893	-17.71	98.86	-0.08
341	SLV 2	1991	25	3893	-17.71	98.86	-0.08
341	SLV 3	2240	70	5024	-58.41	111.37	-0.21
341	SLV 4	2240	70	5024	-58.41	111.37	-0.21
341	SLV 5	606	-37	2086	38.54	33.69	0.11
341	SLV 6	606	-37	2086	38.54	33.69	0.11
341	SLV 7	1438	111	5856	-97.15	75.38	-0.34
341	SLV 8	1438	111	5856	-97.15	75.38	-0.34
341	SLV 9	-331	-46	1669	46.04	-9.67	0.14
341	SLV 10	-331	-46	1669	46.04	-9.67	0.14
341	SLV 11	500	103	5439	-89.65	32.03	-0.31
341	SLV 12	500	103	5439	-89.65	32.03	-0.31
341	SLV 13	-1133	-4	2501	7.3	-45.65	0.01
341	SLV 14	-1133	-4	2501	7.3	-45.65	0.01
341	SLV 15	-884	41	3632	-33.4	-33.14	-0.12
341	SLV 16	-884	41	3632	-33.4	-33.14	-0.12
342	SLU 1	551	28	3490	-21.91	18.81	-0.11
342	SLU 2	551	28	3491	-21.92	18.81	-0.11
342	SLU 3	569	29	3577	-22.8	19.39	-0.11
342	SLU 4	569	29	3578	-22.81	19.39	-0.11
342	SLU 5	562	29	3550	-22.53	19.15	-0.11
342	SLU 6	580	30	3636	-23.41	19.72	-0.11
342	SLU 7	580	30	3636	-23.42	19.73	-0.11
342	SLU 8	573	30	3608	-23.13	19.48	-0.11
342	SLU 9	573	30	3608	-23.13	19.48	-0.11
342	SLU 10	640	32	3992	-24.76	21.89	-0.12
342	SLU 11	658	33	4078	-25.64	22.47	-0.13
342	SLU 12	658	33	4079	-25.65	22.47	-0.13
342	SLU 13	651	33	4050	-25.37	22.23	-0.12
342	SLU 14	668	34	4137	-26.25	22.8	-0.13
342	SLU 15	669	34	4137	-26.26	22.81	-0.13
342	SLU 16	661	33	4109	-25.96	22.56	-0.13
342	SLU 17	661	33	4109	-25.97	22.56	-0.13
342	SLU 18	678	33	4206	-25.97	23.21	-0.13
342	SLU 19	678	33	4206	-25.97	23.21	-0.13
342	SLU 20	689	34	4265	-26.57	23.54	-0.13
342	SLU 21	689	34	4265	-26.58	23.55	-0.13

Nodo	Cont.	Reazione a traslazione			Reazione a rotazione		
Ind.	N.br.	x	y	z	x	y	z
342	SLU 22	634	32	3945	-24.88	21.67	-0.12
342	SLU 23	635	32	3946	-24.89	21.67	-0.12
342	SLU 24	652	33	4032	-25.77	22.25	-0.13
342	SLU 25	652	33	4033	-25.78	22.25	-0.13
342	SLU 26	645	33	4004	-25.5	22.01	-0.12
342	SLU 27	663	34	4091	-26.38	22.58	-0.13
342	SLU 28	663	34	4091	-26.39	22.59	-0.13
342	SLU 29	656	33	4062	-26.09	22.34	-0.13
342	SLU 30	656	33	4063	-26.1	22.34	-0.13
342	SLU 31	723	36	4447	-27.73	24.75	-0.14
342	SLU 32	741	37	4533	-28.61	25.33	-0.14
342	SLU 33	741	37	4533	-28.62	25.33	-0.14
342	SLU 34	734	36	4505	-28.34	25.09	-0.14
342	SLU 35	752	38	4592	-29.22	25.66	-0.14
342	SLU 36	752	38	4592	-29.22	25.67	-0.14
342	SLU 37	745	37	4563	-28.93	25.42	-0.14
342	SLU 38	745	37	4564	-28.94	25.42	-0.14
342	SLU 39	761	37	4661	-28.93	26.07	-0.14
342	SLU 40	761	37	4661	-28.94	26.07	-0.14
342	SLU 41	772	38	4719	-29.54	26.4	-0.14
342	SLU 42	772	38	4720	-29.55	26.41	-0.14
342	SLU 43	688	35	4381	-27.47	23.47	-0.13
342	SLU 44	688	35	4382	-27.48	23.48	-0.13
342	SLU 45	706	36	4469	-28.36	24.05	-0.14
342	SLU 46	706	36	4469	-28.37	24.05	-0.14
342	SLU 47	699	36	4441	-28.09	23.81	-0.14
342	SLU 48	716	37	4527	-28.97	24.39	-0.14
342	SLU 49	716	37	4528	-28.97	24.39	-0.14
342	SLU 50	709	37	4499	-28.68	24.14	-0.14
342	SLU 51	709	37	4499	-28.69	24.14	-0.14
342	SLU 52	777	39	4883	-30.32	26.56	-0.15
342	SLU 53	794	40	4969	-31.2	27.13	-0.15
342	SLU 54	794	40	4970	-31.2	27.13	-0.15
342	SLU 55	787	40	4942	-30.92	26.89	-0.15
342	SLU 56	805	41	5028	-31.81	27.47	-0.16
342	SLU 57	805	41	5028	-31.81	27.47	-0.16
342	SLU 58	798	40	5000	-31.52	27.22	-0.15
342	SLU 59	798	40	5000	-31.53	27.22	-0.15
342	SLU 60	815	40	5097	-31.52	27.87	-0.15
342	SLU 61	815	40	5097	-31.53	27.88	-0.15
342	SLU 62	825	41	5156	-32.13	28.21	-0.16
342	SLU 63	825	41	5156	-32.14	28.21	-0.16
342	SLU 64	771	39	4836	-30.44	26.33	-0.15
342	SLU 65	771	39	4837	-30.45	26.34	-0.15
342	SLU 66	789	40	4923	-31.33	26.91	-0.15
342	SLU 67	789	40	4924	-31.33	26.91	-0.15
342	SLU 68	782	40	4895	-31.05	26.67	-0.15
342	SLU 69	800	41	4982	-31.94	27.25	-0.16
342	SLU 70	800	41	4982	-31.94	27.25	-0.16
342	SLU 71	793	41	4954	-31.65	27	-0.15
342	SLU 72	793	41	4954	-31.66	27	-0.15
342	SLU 73	860	43	5338	-33.28	29.42	-0.16
342	SLU 74	878	44	5424	-34.17	29.99	-0.17
342	SLU 75	878	44	5425	-34.17	29.99	-0.17
342	SLU 76	871	44	5396	-33.89	29.75	-0.17
342	SLU 77	889	45	5483	-34.77	30.33	-0.17
342	SLU 78	889	45	5483	-34.78	30.33	-0.17
342	SLU 79	882	44	5455	-34.49	30.08	-0.17
342	SLU 80	882	44	5455	-34.5	30.08	-0.17
342	SLU 81	898	44	5552	-34.49	30.73	-0.17
342	SLU 82	898	44	5552	-34.5	30.73	-0.17
342	SLU 83	909	45	5611	-35.1	31.07	-0.17
342	SLU 84	909	45	5611	-35.1	31.07	-0.17
342	SLE RA 1	575	29	3620	-22.76	19.63	-0.11
342	SLE RA 2	575	29	3621	-22.77	19.63	-0.11
342	SLE RA 3	587	30	3678	-23.35	20.01	-0.11
342	SLE RA 4	587	30	3679	-23.36	20.02	-0.11
342	SLE RA 5	582	30	3660	-23.17	19.85	-0.11
342	SLE RA 6	594	30	3717	-23.76	20.24	-0.12
342	SLE RA 7	594	30	3718	-23.76	20.24	-0.12
342	SLE RA 8	589	30	3698	-23.57	20.07	-0.12
342	SLE RA 9	589	30	3699	-23.57	20.07	-0.12
342	SLE RA 10	634	32	3955	-24.66	21.68	-0.12
342	SLE RA 11	646	32	4012	-25.25	22.07	-0.12
342	SLE RA 12	646	32	4012	-25.25	22.07	-0.12
342	SLE RA 13	641	32	3994	-25.06	21.91	-0.12
342	SLE RA 14	653	33	4051	-25.65	22.29	-0.13
342	SLE RA 15	653	33	4052	-25.66	22.29	-0.13
342	SLE RA 16	648	33	4032	-25.46	22.13	-0.12
342	SLE RA 17	648	33	4033	-25.47	22.13	-0.12
342	SLE RA 18	659	33	4097	-25.46	22.56	-0.12
342	SLE RA 19	659	33	4097	-25.47	22.56	-0.12
342	SLE RA 20	667	33	4136	-25.87	22.78	-0.13
342	SLE RA 21	667	33	4137	-25.87	22.78	-0.13
342	SLE FR 1	575	29	3620	-22.76	19.63	-0.11
342	SLE FR 2	575	29	3620	-22.76	19.63	-0.11
342	SLE FR 3	578	29	3636	-22.92	19.72	-0.11
342	SLE FR 4	600	30	3763	-23.57	20.51	-0.12
342	SLE FR 5	603	30	3779	-23.73	20.6	-0.12
342	SLE FR 6	617	31	3859	-24.11	21.09	-0.12

Nodo	Cont.	Reazione a traslazione			Reazione a rotazione		
Ind.	N.br.	x	y	z	x	y	z
342	SLE QP 1	575	29	3620	-22.76	19.63	-0.11
342	SLE QP 2	600	30	3763	-23.57	20.51	-0.12
342	SLD 1	1219	29	3854	-21.19	48.7	-0.11
342	SLD 2	1219	29	3854	-21.19	48.7	-0.11
342	SLD 3	1346	45	4308	-36.89	53.82	-0.17
342	SLD 4	1346	45	4308	-36.89	53.82	-0.17
342	SLD 5	593	5	3102	0.95	21.21	-0.01
342	SLD 6	593	5	3102	0.95	21.21	-0.01
342	SLD 7	1017	60	4616	-51.37	38.26	-0.23
342	SLD 8	1017	60	4616	-51.37	38.26	-0.23
342	SLD 9	183	1	2911	4.23	2.76	0
342	SLD 10	183	1	2911	4.23	2.76	0
342	SLD 11	608	56	4425	-48.09	19.81	-0.22
342	SLD 12	608	56	4425	-48.09	19.81	-0.22
342	SLD 13	-146	15	3219	-10.26	-12.8	-0.06
342	SLD 14	-146	15	3219	-10.26	-12.8	-0.06
342	SLD 15	-18	32	3673	-25.95	-7.68	-0.12
342	SLD 16	-18	32	3673	-25.95	-7.68	-0.12
342	SLV 1	2038	27	3960	-17.91	86.05	-0.09
342	SLV 2	2038	27	3960	-17.91	86.05	-0.09
342	SLV 3	2343	65	5053	-54.9	98.33	-0.25
342	SLV 4	2343	65	5053	-54.9	98.33	-0.25
342	SLV 5	568	-30	2165	34.24	21.54	0.12
342	SLV 6	568	-30	2165	34.24	21.54	0.12
342	SLV 7	1587	100	5808	-89.08	62.49	-0.39
342	SLV 8	1587	100	5808	-89.08	62.49	-0.39
342	SLV 9	-386	-39	1719	41.94	-21.47	0.16
342	SLV 10	-386	-39	1719	41.94	-21.47	0.16
342	SLV 11	632	90	5362	-81.38	19.48	-0.35
342	SLV 12	632	90	5362	-81.38	19.48	-0.35
342	SLV 13	-1143	-5	2473	7.76	-57.32	0.02
342	SLV 14	-1143	-5	2473	7.76	-57.32	0.02
342	SLV 15	-837	34	3566	-29.23	-45.03	-0.14
342	SLV 16	-837	34	3566	-29.23	-45.03	-0.14
343	SLU 1	725	22	3640	-17.72	37.79	-0.09
343	SLU 2	725	22	3641	-17.73	37.8	-0.09
343	SLU 3	750	23	3732	-18.44	39.1	-0.1
343	SLU 4	750	23	3733	-18.45	39.1	-0.1
343	SLU 5	740	22	3702	-18.22	38.63	-0.09
343	SLU 6	765	23	3794	-18.93	39.93	-0.1
343	SLU 7	765	23	3794	-18.94	39.93	-0.1
343	SLU 8	756	23	3764	-18.7	39.45	-0.1
343	SLU 9	756	23	3764	-18.71	39.46	-0.1
343	SLU 10	837	25	4165	-20	43.61	-0.1
343	SLU 11	861	26	4257	-20.71	44.91	-0.11
343	SLU 12	861	26	4257	-20.72	44.91	-0.11
343	SLU 13	852	25	4227	-20.49	44.44	-0.11
343	SLU 14	877	26	4318	-21.21	45.74	-0.11
343	SLU 15	877	26	4319	-21.21	45.74	-0.11
343	SLU 16	867	26	4288	-20.98	45.26	-0.11
343	SLU 17	867	26	4288	-20.98	45.27	-0.11
343	SLU 18	884	26	4390	-20.96	46.09	-0.11
343	SLU 19	884	26	4390	-20.97	46.09	-0.11
343	SLU 20	900	26	4451	-21.46	46.92	-0.11
343	SLU 21	900	26	4452	-21.46	46.92	-0.11
343	SLU 22	832	25	4117	-20.1	43.38	-0.1
343	SLU 23	832	25	4118	-20.11	43.39	-0.1
343	SLU 24	857	26	4209	-20.83	44.69	-0.11
343	SLU 25	857	26	4210	-20.83	44.69	-0.11
343	SLU 26	847	25	4179	-20.61	44.22	-0.11
343	SLU 27	872	26	4271	-21.32	45.52	-0.11
343	SLU 28	872	26	4271	-21.33	45.52	-0.11
343	SLU 29	863	26	4241	-21.09	45.04	-0.11
343	SLU 30	863	26	4241	-21.1	45.05	-0.11
343	SLU 31	944	28	4643	-22.39	49.2	-0.12
343	SLU 32	968	29	4734	-23.1	50.5	-0.12
343	SLU 33	968	29	4734	-23.11	50.5	-0.12
343	SLU 34	959	28	4704	-22.88	50.03	-0.12
343	SLU 35	984	29	4795	-23.59	51.33	-0.12
343	SLU 36	984	29	4796	-23.6	51.33	-0.12
343	SLU 37	974	29	4765	-23.36	50.85	-0.12
343	SLU 38	975	29	4765	-23.37	50.86	-0.12
343	SLU 39	991	29	4867	-23.35	51.68	-0.12
343	SLU 40	991	29	4867	-23.36	51.68	-0.12
343	SLU 41	1007	29	4928	-23.84	52.51	-0.12
343	SLU 42	1007	29	4929	-23.85	52.51	-0.12
343	SLU 43	906	27	4569	-22.21	47.21	-0.11
343	SLU 44	906	27	4570	-22.22	47.22	-0.11
343	SLU 45	930	28	4661	-22.94	48.52	-0.12
343	SLU 46	930	28	4661	-22.94	48.52	-0.12
343	SLU 47	921	28	4631	-22.72	48.05	-0.12
343	SLU 48	946	29	4722	-23.43	49.35	-0.12
343	SLU 49	946	29	4723	-23.44	49.35	-0.12
343	SLU 50	936	29	4692	-23.2	48.87	-0.12
343	SLU 51	937	29	4692	-23.21	48.88	-0.12
343	SLU 52	1017	30	5094	-24.5	53.03	-0.13
343	SLU 53	1042	31	5185	-25.21	54.33	-0.13
343	SLU 54	1042	31	5186	-25.22	54.33	-0.13
343	SLU 55	1033	31	5156	-24.99	53.86	-0.13
343	SLU 56	1057	32	5247	-25.7	55.16	-0.13

Nodo	Cont.	Reazione a traslazione			Reazione a rotazione		
Ind.	N.br.	x	y	z	x	y	z
343	SLU 57	1057	32	5247	-25.71	55.16	-0.13
343	SLU 58	1048	31	5217	-25.47	54.68	-0.13
343	SLU 59	1048	31	5217	-25.48	54.69	-0.13
343	SLU 60	1065	31	5318	-25.46	55.51	-0.13
343	SLU 61	1065	31	5319	-25.47	55.51	-0.13
343	SLU 62	1080	32	5380	-25.96	56.34	-0.13
343	SLU 63	1081	32	5380	-25.96	56.34	-0.13
343	SLU 64	1013	30	5046	-24.6	52.8	-0.13
343	SLU 65	1013	30	5047	-24.61	52.81	-0.13
343	SLU 66	1037	31	5138	-25.32	54.11	-0.13
343	SLU 67	1037	31	5138	-25.33	54.11	-0.13
343	SLU 68	1028	31	5108	-25.1	53.64	-0.13
343	SLU 69	1053	32	5199	-25.82	54.94	-0.13
343	SLU 70	1053	32	5200	-25.82	54.94	-0.13
343	SLU 71	1044	32	5169	-25.59	54.46	-0.13
343	SLU 72	1044	32	5169	-25.59	54.47	-0.13
343	SLU 73	1124	33	5571	-26.88	58.62	-0.14
343	SLU 74	1149	34	5662	-27.6	59.92	-0.14
343	SLU 75	1149	34	5663	-27.6	59.92	-0.14
343	SLU 76	1140	34	5633	-27.38	59.45	-0.14
343	SLU 77	1164	35	5724	-28.09	60.75	-0.15
343	SLU 78	1165	35	5724	-28.1	60.75	-0.15
343	SLU 79	1155	34	5694	-27.86	60.27	-0.14
343	SLU 80	1155	34	5694	-27.87	60.28	-0.14
343	SLU 81	1172	34	5795	-27.85	61.1	-0.14
343	SLU 82	1172	34	5796	-27.85	61.1	-0.14
343	SLU 83	1188	35	5857	-28.34	61.93	-0.15
343	SLU 84	1188	35	5857	-28.35	61.93	-0.15
343	SLE RA 1	755	23	3777	-18.4	39.39	-0.1
343	SLE RA 2	755	23	3777	-18.41	39.39	-0.1
343	SLE RA 3	772	23	3838	-18.88	40.26	-0.1
343	SLE RA 4	772	23	3838	-18.89	40.26	-0.1
343	SLE RA 5	766	23	3818	-18.73	39.94	-0.1
343	SLE RA 6	782	24	3879	-19.21	40.81	-0.1
343	SLE RA 7	782	24	3879	-19.21	40.81	-0.1
343	SLE RA 8	776	23	3859	-19.06	40.49	-0.1
343	SLE RA 9	776	23	3859	-19.06	40.5	-0.1
343	SLE RA 10	830	25	4127	-19.92	43.26	-0.1
343	SLE RA 11	846	25	4188	-20.4	44.13	-0.11
343	SLE RA 12	846	25	4188	-20.4	44.13	-0.11
343	SLE RA 13	840	25	4168	-20.25	43.82	-0.1
343	SLE RA 14	857	26	4229	-20.73	44.68	-0.11
343	SLE RA 15	857	26	4229	-20.73	44.69	-0.11
343	SLE RA 16	850	25	4209	-20.57	44.37	-0.11
343	SLE RA 17	851	25	4209	-20.58	44.37	-0.11
343	SLE RA 18	862	25	4276	-20.56	44.92	-0.11
343	SLE RA 19	862	25	4277	-20.57	44.92	-0.11
343	SLE RA 20	872	26	4317	-20.89	45.47	-0.11
343	SLE RA 21	872	26	4318	-20.9	45.48	-0.11
343	SLE FR 1	755	23	3777	-18.4	39.39	-0.1
343	SLE FR 2	755	23	3777	-18.4	39.39	-0.1
343	SLE FR 3	760	23	3793	-18.53	39.61	-0.1
343	SLE FR 4	787	23	3927	-19.05	41.05	-0.1
343	SLE FR 5	791	24	3943	-19.18	41.27	-0.1
343	SLE FR 6	809	24	4027	-19.48	42.15	-0.1
343	SLE QP 1	755	23	3777	-18.4	39.39	-0.1
343	SLE QP 2	787	23	3927	-19.05	41.05	-0.1
343	SLD 1	1383	25	4038	-18.18	68.27	-0.05
343	SLD 2	1383	25	4038	-18.18	68.27	-0.05
343	SLD 3	1543	36	4512	-30.57	75.78	-0.1
343	SLD 4	1543	36	4512	-30.57	75.78	-0.1
343	SLD 5	723	7	3240	0	37.82	0
343	SLD 6	723	7	3240	0	37.82	0
343	SLD 7	1257	45	4822	-41.29	62.86	-0.18
343	SLD 8	1257	45	4822	-41.29	62.86	-0.18
343	SLD 9	318	2	3031	3.2	19.23	-0.01
343	SLD 10	318	2	3031	3.2	19.23	-0.01
343	SLD 11	852	40	4613	-38.1	44.27	-0.2
343	SLD 12	852	40	4613	-38.1	44.27	-0.2
343	SLD 13	32	11	3341	-7.53	6.31	-0.1
343	SLD 14	32	11	3341	-7.53	6.31	-0.1
343	SLD 15	192	22	3816	-19.91	13.82	-0.15
343	SLD 16	192	22	3816	-19.91	13.82	-0.15
343	SLV 1	2170	27	4171	-16.93	104.3	0.03
343	SLV 2	2170	27	4171	-16.93	104.3	0.03
343	SLV 3	2554	53	5313	-46.14	122.29	-0.1
343	SLV 4	2554	53	5313	-46.14	122.29	-0.1
343	SLV 5	620	-16	2268	25.89	32.72	0.14
343	SLV 6	620	-16	2268	25.89	32.72	0.14
343	SLV 7	1899	73	6075	-71.48	92.72	-0.3
343	SLV 8	1899	73	6075	-71.48	92.72	-0.3
343	SLV 9	-325	-26	1779	33.39	-10.63	0.1
343	SLV 10	-325	-26	1779	33.39	-10.63	0.1
343	SLV 11	954	63	5586	-63.99	49.37	-0.33
343	SLV 12	954	63	5586	-63.99	49.37	-0.33
343	SLV 13	-980	-6	2540	8.05	-40.2	-0.09
343	SLV 14	-980	-6	2540	8.05	-40.2	-0.09
343	SLV 15	-596	20	3683	-21.16	-22.21	-0.22
343	SLV 16	-596	20	3683	-21.16	-22.21	-0.22
344	SLU 1	611	10	3843	-11.39	21.6	-0.05

Nodo	Cont.	Reazione a traslazione			Reazione a rotazione		
Ind.	N.br.	x	y	z	x	y	z
344	SLU 2	611	10	3844	-11.4	21.61	-0.05
344	SLU 3	631	11	3942	-11.86	22.32	-0.06
344	SLU 4	632	11	3942	-11.87	22.32	-0.06
344	SLU 5	624	11	3909	-11.72	22.04	-0.06
344	SLU 6	644	11	4008	-12.18	22.75	-0.06
344	SLU 7	644	11	4008	-12.19	22.75	-0.06
344	SLU 8	636	11	3975	-12.04	22.46	-0.06
344	SLU 9	636	11	3975	-12.04	22.47	-0.06
344	SLU 10	701	12	4398	-12.82	24.78	-0.06
344	SLU 11	722	12	4496	-13.28	25.49	-0.06
344	SLU 12	722	12	4496	-13.29	25.5	-0.06
344	SLU 13	714	12	4464	-13.14	25.21	-0.06
344	SLU 14	735	12	4562	-13.61	25.92	-0.07
344	SLU 15	735	12	4562	-13.61	25.93	-0.07
344	SLU 16	727	12	4529	-13.46	25.64	-0.06
344	SLU 17	727	12	4529	-13.46	25.64	-0.06
344	SLU 18	739	12	4635	-13.42	26.13	-0.06
344	SLU 19	739	12	4635	-13.42	26.14	-0.06
344	SLU 20	752	12	4701	-13.74	26.56	-0.07
344	SLU 21	752	12	4701	-13.75	26.57	-0.07
344	SLU 22	698	12	4349	-12.9	24.68	-0.06
344	SLU 23	698	12	4349	-12.91	24.68	-0.06
344	SLU 24	719	12	4448	-13.37	25.4	-0.06
344	SLU 25	719	12	4448	-13.37	25.4	-0.06
344	SLU 26	711	12	4415	-13.23	25.11	-0.06
344	SLU 27	732	12	4513	-13.69	25.83	-0.07
344	SLU 28	732	12	4514	-13.7	25.83	-0.07
344	SLU 29	724	12	4481	-13.54	25.54	-0.06
344	SLU 30	724	12	4481	-13.55	25.54	-0.06
344	SLU 31	788	13	4904	-14.33	27.85	-0.07
344	SLU 32	809	13	5002	-14.79	28.57	-0.07
344	SLU 33	809	13	5002	-14.8	28.57	-0.07
344	SLU 34	801	13	4969	-14.65	28.28	-0.07
344	SLU 35	822	14	5068	-15.11	29	-0.07
344	SLU 36	822	14	5068	-15.12	29	-0.07
344	SLU 37	814	14	5035	-14.97	28.71	-0.07
344	SLU 38	814	14	5035	-14.97	28.71	-0.07
344	SLU 39	827	14	5141	-14.93	29.21	-0.07
344	SLU 40	827	14	5141	-14.93	29.21	-0.07
344	SLU 41	840	14	5207	-15.25	29.64	-0.07
344	SLU 42	840	14	5207	-15.26	29.64	-0.07
344	SLU 43	764	13	4823	-14.29	27.03	-0.07
344	SLU 44	764	13	4823	-14.3	27.04	-0.07
344	SLU 45	785	13	4921	-14.76	27.75	-0.07
344	SLU 46	785	13	4922	-14.77	27.75	-0.07
344	SLU 47	777	13	4889	-14.62	27.47	-0.07
344	SLU 48	798	14	4987	-15.08	28.18	-0.07
344	SLU 49	798	14	4988	-15.09	28.18	-0.07
344	SLU 50	790	14	4954	-14.94	27.89	-0.07
344	SLU 51	790	14	4955	-14.94	27.89	-0.07
344	SLU 52	854	14	5377	-15.72	30.21	-0.08
344	SLU 53	875	15	5476	-16.18	30.92	-0.08
344	SLU 54	875	15	5476	-16.19	30.92	-0.08
344	SLU 55	867	15	5443	-16.04	30.64	-0.08
344	SLU 56	888	15	5542	-16.51	31.35	-0.08
344	SLU 57	888	15	5542	-16.51	31.35	-0.08
344	SLU 58	880	15	5509	-16.36	31.06	-0.08
344	SLU 59	880	15	5509	-16.36	31.07	-0.08
344	SLU 60	893	15	5615	-16.32	31.56	-0.08
344	SLU 61	893	15	5615	-16.32	31.56	-0.08
344	SLU 62	905	15	5680	-16.64	31.99	-0.08
344	SLU 63	905	15	5681	-16.65	31.99	-0.08
344	SLU 64	851	14	5328	-15.8	30.11	-0.08
344	SLU 65	851	14	5329	-15.81	30.11	-0.08
344	SLU 66	872	15	5427	-16.27	30.82	-0.08
344	SLU 67	872	15	5427	-16.27	30.83	-0.08
344	SLU 68	864	15	5395	-16.13	30.54	-0.08
344	SLU 69	885	15	5493	-16.59	31.25	-0.08
344	SLU 70	885	15	5493	-16.6	31.26	-0.08
344	SLU 71	877	15	5460	-16.44	30.97	-0.08
344	SLU 72	877	15	5460	-16.45	30.97	-0.08
344	SLU 73	942	16	5883	-17.23	33.28	-0.08
344	SLU 74	962	16	5981	-17.69	33.99	-0.08
344	SLU 75	962	16	5982	-17.69	34	-0.08
344	SLU 76	955	16	5949	-17.55	33.71	-0.08
344	SLU 77	975	16	6047	-18.01	34.42	-0.09
344	SLU 78	975	16	6048	-18.02	34.43	-0.09
344	SLU 79	967	16	6015	-17.87	34.14	-0.09
344	SLU 80	967	16	6015	-17.87	34.14	-0.09
344	SLU 81	980	16	6120	-17.83	34.63	-0.09
344	SLU 82	980	16	6121	-17.83	34.64	-0.09
344	SLU 83	993	16	6186	-18.15	35.06	-0.09
344	SLU 84	993	16	6186	-18.16	35.07	-0.09
344	SLE RA 1	636	11	3988	-11.82	22.48	-0.06
344	SLE RA 2	636	11	3988	-11.83	22.48	-0.06
344	SLE RA 3	650	11	4053	-12.13	22.96	-0.06
344	SLE RA 4	650	11	4054	-12.14	22.96	-0.06
344	SLE RA 5	644	11	4032	-12.04	22.77	-0.06
344	SLE RA 6	658	11	4097	-12.35	23.25	-0.06
344	SLE RA 7	658	11	4098	-12.35	23.25	-0.06

Nodo	Cont.	Reazione a traslazione			Reazione a rotazione		
Ind.	N.br.	x	y	z	x	y	z
344	SLE RA 8	653	11	4076	-12.25	23.06	-0.06
344	SLE RA 9	653	11	4076	-12.26	23.06	-0.06
344	SLE RA 10	696	12	4357	-12.77	24.6	-0.06
344	SLE RA 11	710	12	4423	-13.08	25.08	-0.06
344	SLE RA 12	710	12	4423	-13.09	25.08	-0.06
344	SLE RA 13	704	12	4401	-12.99	24.89	-0.06
344	SLE RA 14	718	12	4467	-13.3	25.36	-0.06
344	SLE RA 15	718	12	4467	-13.3	25.36	-0.06
344	SLE RA 16	713	12	4445	-13.2	25.17	-0.06
344	SLE RA 17	713	12	4445	-13.2	25.17	-0.06
344	SLE RA 18	721	12	4516	-13.17	25.5	-0.06
344	SLE RA 19	722	12	4516	-13.18	25.5	-0.06
344	SLE RA 20	730	12	4559	-13.39	25.79	-0.06
344	SLE RA 21	730	12	4560	-13.39	25.79	-0.06
344	SLE FR 1	636	11	3988	-11.82	22.48	-0.06
344	SLE FR 2	636	11	3988	-11.82	22.48	-0.06
344	SLE FR 3	639	11	4005	-11.91	22.6	-0.06
344	SLE FR 4	661	11	4146	-12.23	23.39	-0.06
344	SLE FR 5	665	11	4164	-12.31	23.5	-0.06
344	SLE FR 6	679	11	4252	-12.5	23.99	-0.06
344	SLE QP 1	636	11	3988	-11.82	22.48	-0.06
344	SLE QP 2	661	11	4146	-12.23	23.39	-0.06
344	SLD 1	1233	2	4250	-3.44	50.49	-0.02
344	SLD 2	1233	2	4250	-3.44	50.49	-0.02
344	SLD 3	1394	7	4779	-11.5	56.92	-0.05
344	SLD 4	1394	7	4779	-11.5	56.92	-0.05
344	SLD 5	589	1	3376	2.64	21.76	0.01
344	SLD 6	589	1	3376	2.64	21.76	0.01
344	SLD 7	1125	17	5137	-24.23	43.21	-0.12
344	SLD 8	1125	17	5137	-24.23	43.21	-0.12
344	SLD 9	198	5	3155	-0.22	3.57	0
344	SLD 10	198	5	3155	-0.22	3.57	0
344	SLD 11	734	21	4916	-27.09	25.02	-0.13
344	SLD 12	734	21	4916	-27.09	25.02	-0.13
344	SLD 13	-71	16	3513	-12.95	-10.15	-0.06
344	SLD 14	-71	16	3513	-12.95	-10.15	-0.06
344	SLD 15	90	20	4042	-21.02	-3.71	-0.1
344	SLD 16	90	20	4042	-21.02	-3.71	-0.1
344	SLV 1	1989	-11	4373	8.44	86.37	0.04
344	SLV 2	1989	-11	4373	8.44	86.37	0.04
344	SLV 3	2374	0	5645	-10.6	101.77	-0.05
344	SLV 4	2374	0	5645	-10.6	101.77	-0.05
344	SLV 5	476	-13	2285	22.84	18.92	0.11
344	SLV 6	476	-13	2285	22.84	18.92	0.11
344	SLV 7	1759	25	6524	-40.61	70.26	-0.19
344	SLV 8	1759	25	6524	-40.61	70.26	-0.19
344	SLV 9	-436	-3	1768	16.15	-23.49	0.08
344	SLV 10	-436	-3	1768	16.15	-23.49	0.08
344	SLV 11	847	35	6007	-47.29	27.85	-0.22
344	SLV 12	847	35	6007	-47.29	27.85	-0.22
344	SLV 13	-1051	22	2647	-13.86	-54.99	-0.07
344	SLV 14	-1051	22	2647	-13.86	-54.99	-0.07
344	SLV 15	-666	33	3919	-32.89	-39.59	-0.16
344	SLV 16	-666	33	3919	-32.89	-39.59	-0.16
345	SLU 1	620	-6	4036	-4.08	33.78	-0.01
345	SLU 2	620	-6	4036	-4.09	33.78	-0.01
345	SLU 3	642	-6	4142	-4.26	34.98	-0.01
345	SLU 4	642	-6	4142	-4.27	34.98	-0.01
345	SLU 5	634	-6	4107	-4.21	34.54	-0.01
345	SLU 6	655	-6	4212	-4.39	35.73	-0.01
345	SLU 7	655	-6	4212	-4.39	35.74	-0.01
345	SLU 8	647	-6	4177	-4.34	35.29	-0.01
345	SLU 9	647	-6	4177	-4.34	35.29	-0.01
345	SLU 10	708	-7	4616	-4.53	38.64	-0.01
345	SLU 11	730	-7	4721	-4.7	39.83	-0.01
345	SLU 12	730	-7	4721	-4.71	39.84	-0.01
345	SLU 13	721	-7	4686	-4.66	39.4	-0.01
345	SLU 14	743	-7	4791	-4.83	40.59	-0.01
345	SLU 15	743	-7	4792	-4.83	40.59	-0.01
345	SLU 16	735	-7	4756	-4.78	40.15	-0.01
345	SLU 17	735	-7	4756	-4.78	40.15	-0.01
345	SLU 18	745	-7	4864	-4.71	40.72	-0.01
345	SLU 19	745	-7	4864	-4.71	40.72	-0.01
345	SLU 20	759	-7	4934	-4.84	41.47	-0.01
345	SLU 21	759	-7	4934	-4.84	41.48	-0.01
345	SLU 22	707	-7	4567	-4.58	38.57	-0.01
345	SLU 23	707	-7	4568	-4.59	38.58	-0.01
345	SLU 24	729	-7	4673	-4.76	39.77	-0.01
345	SLU 25	729	-7	4673	-4.77	39.77	-0.01
345	SLU 26	720	-7	4638	-4.71	39.33	-0.01
345	SLU 27	742	-7	4743	-4.89	40.53	-0.01
345	SLU 28	742	-7	4743	-4.89	40.53	-0.01
345	SLU 29	734	-7	4708	-4.84	40.08	-0.01
345	SLU 30	734	-7	4708	-4.84	40.09	-0.01
345	SLU 31	795	-8	5147	-5.03	43.44	-0.01
345	SLU 32	816	-8	5252	-5.2	44.63	-0.01
345	SLU 33	816	-8	5253	-5.21	44.63	-0.01
345	SLU 34	808	-8	5217	-5.16	44.19	-0.01
345	SLU 35	830	-8	5323	-5.33	45.38	-0.01
345	SLU 36	830	-8	5323	-5.33	45.39	-0.01

Nodo	Cont.	Reazione a traslazione			Reazione a rotazione		
Ind.	N.br.	x	y	z	x	y	z
345	SLU 37	822	-8	5288	-5.28	44.94	-0.01
345	SLU 38	822	-8	5288	-5.28	44.95	-0.01
345	SLU 39	832	-8	5395	-5.21	45.51	-0.01
345	SLU 40	832	-8	5395	-5.21	45.51	-0.01
345	SLU 41	846	-8	5466	-5.34	46.27	-0.01
345	SLU 42	846	-8	5466	-5.34	46.27	-0.01
345	SLU 43	776	-7	5065	-5.13	42.27	-0.01
345	SLU 44	776	-7	5065	-5.14	42.27	-0.01
345	SLU 45	798	-7	5170	-5.31	43.47	-0.01
345	SLU 46	798	-7	5170	-5.32	43.47	-0.01
345	SLU 47	790	-7	5135	-5.27	43.03	-0.01
345	SLU 48	812	-8	5241	-5.44	44.22	-0.01
345	SLU 49	812	-8	5241	-5.45	44.23	-0.01
345	SLU 50	803	-8	5205	-5.39	43.78	-0.01
345	SLU 51	803	-8	5205	-5.39	43.78	-0.01
345	SLU 52	864	-8	5644	-5.58	47.13	-0.01
345	SLU 53	886	-8	5750	-5.75	48.32	-0.01
345	SLU 54	886	-8	5750	-5.76	48.33	-0.01
345	SLU 55	878	-8	5715	-5.71	47.89	-0.01
345	SLU 56	899	-9	5820	-5.88	49.08	-0.01
345	SLU 57	899	-9	5820	-5.89	49.08	-0.01
345	SLU 58	891	-9	5785	-5.83	48.64	-0.01
345	SLU 59	891	-9	5785	-5.83	48.64	-0.01
345	SLU 60	902	-9	5892	-5.76	49.21	-0.01
345	SLU 61	902	-9	5893	-5.77	49.21	-0.01
345	SLU 62	915	-9	5963	-5.89	49.96	-0.01
345	SLU 63	915	-9	5963	-5.89	49.97	-0.01
345	SLU 64	863	-8	5596	-5.63	47.06	-0.01
345	SLU 65	863	-8	5596	-5.64	47.07	-0.01
345	SLU 66	885	-8	5702	-5.81	48.26	-0.01
345	SLU 67	885	-8	5702	-5.82	48.26	-0.01
345	SLU 68	877	-8	5667	-5.77	47.82	-0.01
345	SLU 69	898	-9	5772	-5.94	49.02	-0.01
345	SLU 70	898	-9	5772	-5.95	49.02	-0.01
345	SLU 71	890	-8	5737	-5.89	48.57	-0.01
345	SLU 72	890	-8	5737	-5.89	48.58	-0.01
345	SLU 73	951	-9	6176	-6.08	51.93	-0.01
345	SLU 74	973	-9	6281	-6.25	53.12	-0.01
345	SLU 75	973	-9	6281	-6.26	53.12	-0.01
345	SLU 76	964	-9	6246	-6.21	52.68	-0.01
345	SLU 77	986	-10	6351	-6.38	53.87	-0.01
345	SLU 78	986	-10	6352	-6.39	53.88	-0.01
345	SLU 79	978	-9	6316	-6.33	53.43	-0.01
345	SLU 80	978	-9	6316	-6.33	53.44	-0.01
345	SLU 81	988	-10	6424	-6.26	54	-0.01
345	SLU 82	989	-10	6424	-6.27	54	-0.01
345	SLU 83	1002	-10	6494	-6.39	54.76	-0.01
345	SLU 84	1002	-10	6494	-6.39	54.76	-0.01
345	SLE RA 1	645	-6	4188	-4.22	35.15	-0.01
345	SLE RA 2	645	-6	4188	-4.23	35.15	-0.01
345	SLE RA 3	659	-6	4258	-4.34	35.95	-0.01
345	SLE RA 4	659	-6	4258	-4.35	35.95	-0.01
345	SLE RA 5	654	-6	4235	-4.31	35.66	-0.01
345	SLE RA 6	668	-6	4305	-4.43	36.45	-0.01
345	SLE RA 7	668	-6	4305	-4.43	36.45	-0.01
345	SLE RA 8	663	-6	4282	-4.39	36.16	-0.01
345	SLE RA 9	663	-6	4282	-4.4	36.16	-0.01
345	SLE RA 10	703	-7	4574	-4.52	38.39	-0.01
345	SLE RA 11	718	-7	4645	-4.64	39.18	-0.01
345	SLE RA 12	718	-7	4645	-4.64	39.19	-0.01
345	SLE RA 13	712	-7	4621	-4.61	38.89	-0.01
345	SLE RA 14	727	-7	4691	-4.72	39.69	-0.01
345	SLE RA 15	727	-7	4692	-4.73	39.69	-0.01
345	SLE RA 16	721	-7	4668	-4.69	39.39	-0.01
345	SLE RA 17	721	-7	4668	-4.69	39.4	-0.01
345	SLE RA 18	728	-7	4740	-4.64	39.77	-0.01
345	SLE RA 19	728	-7	4740	-4.65	39.78	-0.01
345	SLE RA 20	737	-7	4787	-4.73	40.28	-0.01
345	SLE RA 21	737	-7	4787	-4.73	40.28	-0.01
345	SLE FR 1	645	-6	4188	-4.22	35.15	-0.01
345	SLE FR 2	645	-6	4188	-4.22	35.15	-0.01
345	SLE FR 3	648	-6	4207	-4.26	35.35	-0.01
345	SLE FR 4	670	-6	4353	-4.35	36.54	-0.01
345	SLE FR 5	674	-6	4372	-4.38	36.74	-0.01
345	SLE FR 6	687	-7	4464	-4.43	37.46	-0.01
345	SLE QP 1	645	-6	4188	-4.22	35.15	-0.01
345	SLE QP 2	670	-6	4353	-4.35	36.54	-0.01
345	SLD 1	1212	-10	4414	1.26	62.3	0
345	SLD 2	1212	-10	4414	1.26	62.3	0
345	SLD 3	1380	-15	5029	-2.66	70.09	0.02
345	SLD 4	1380	-15	5029	-2.66	70.09	0.02
345	SLD 5	578	-1	3439	3.28	32.45	-0.04
345	SLD 6	578	-1	3439	3.28	32.45	-0.04
345	SLD 7	1138	-16	5489	-9.79	58.42	0.03
345	SLD 8	1138	-16	5489	-9.79	58.42	0.03
345	SLD 9	202	3	3218	1.09	14.65	-0.05
345	SLD 10	202	3	3218	1.09	14.65	-0.05
345	SLD 11	762	-12	5268	-11.97	40.62	0.02
345	SLD 12	762	-12	5268	-11.97	40.62	0.02
345	SLD 13	-41	2	3678	-6.04	2.98	-0.03

Nodo	Cont.	Reazione a traslazione			Reazione a rotazione		
Ind.	N.br.	x	y	z	x	y	z
345	SLD 14	-41	2	3678	-6.04	2.98	-0.03
345	SLD 15	127	-2	4293	-9.96	10.77	-0.01
345	SLD 16	127	-2	4293	-9.96	10.77	-0.01
345	SLV 1	1929	-16	4476	8.84	96.36	0.01
345	SLV 2	1929	-16	4476	8.84	96.36	0.01
345	SLV 3	2332	-26	5955	-0.46	115.04	0.06
345	SLV 4	2332	-26	5955	-0.46	115.04	0.06
345	SLV 5	436	7	2147	13.72	26.16	-0.08
345	SLV 6	436	7	2147	13.72	26.16	-0.08
345	SLV 7	1780	-28	7077	-17.3	88.41	0.09
345	SLV 8	1780	-28	7077	-17.3	88.41	0.09
345	SLV 9	-440	16	1630	8.6	-15.34	-0.1
345	SLV 10	-440	16	1630	8.6	-15.34	-0.1
345	SLV 11	903	-20	6559	-22.42	46.91	0.06
345	SLV 12	903	-20	6559	-22.42	46.91	0.06
345	SLV 13	-993	14	2752	-8.23	-41.97	-0.07
345	SLV 14	-993	14	2752	-8.23	-41.97	-0.07
345	SLV 15	-589	3	4230	-17.54	-23.29	-0.02
345	SLV 16	-589	3	4230	-17.54	-23.29	-0.02
346	SLU 1	412	-20	4210	1.3	12.89	0.02
346	SLU 2	412	-20	4210	1.29	12.89	0.02
346	SLU 3	426	-20	4323	1.33	13.3	0.02
346	SLU 4	426	-20	4323	1.33	13.3	0.02
346	SLU 5	421	-20	4285	1.31	13.11	0.02
346	SLU 6	435	-21	4397	1.35	13.53	0.02
346	SLU 7	435	-21	4397	1.34	13.53	0.02
346	SLU 8	429	-20	4360	1.33	13.34	0.02
346	SLU 9	429	-20	4360	1.33	13.34	0.02
346	SLU 10	466	-22	4809	1.55	14.48	0.02
346	SLU 11	480	-23	4922	1.59	14.9	0.02
346	SLU 12	480	-23	4922	1.58	14.9	0.03
346	SLU 13	475	-23	4884	1.57	14.71	0.02
346	SLU 14	489	-24	4996	1.6	15.13	0.03
346	SLU 15	489	-24	4996	1.6	15.13	0.03
346	SLU 16	483	-23	4959	1.59	14.94	0.03
346	SLU 17	483	-23	4959	1.58	14.94	0.03
346	SLU 18	489	-24	5066	1.67	15.17	0.03
346	SLU 19	489	-24	5066	1.66	15.17	0.03
346	SLU 20	498	-24	5141	1.68	15.4	0.03
346	SLU 21	498	-24	5141	1.68	15.4	0.03
346	SLU 22	467	-22	4763	1.52	14.52	0.02
346	SLU 23	467	-22	4763	1.52	14.52	0.02
346	SLU 24	481	-23	4875	1.55	14.94	0.03
346	SLU 25	481	-23	4875	1.55	14.93	0.03
346	SLU 26	475	-23	4837	1.53	14.74	0.02
346	SLU 27	489	-24	4950	1.57	15.16	0.03
346	SLU 28	489	-23	4950	1.56	15.16	0.03
346	SLU 29	484	-23	4912	1.55	14.97	0.03
346	SLU 30	484	-23	4912	1.55	14.97	0.03
346	SLU 31	521	-25	5362	1.77	16.11	0.03
346	SLU 32	535	-26	5474	1.81	16.53	0.03
346	SLU 33	535	-26	5474	1.8	16.53	0.03
346	SLU 34	529	-26	5436	1.79	16.34	0.03
346	SLU 35	543	-26	5549	1.82	16.76	0.03
346	SLU 36	543	-26	5548	1.82	16.76	0.03
346	SLU 37	538	-26	5511	1.81	16.57	0.03
346	SLU 38	538	-26	5511	1.8	16.57	0.03
346	SLU 39	544	-26	5618	1.89	16.8	0.03
346	SLU 40	544	-26	5618	1.88	16.8	0.03
346	SLU 41	552	-27	5693	1.9	17.03	0.03
346	SLU 42	552	-27	5693	1.9	17.03	0.03
346	SLU 43	517	-24	5284	1.62	16.19	0.03
346	SLU 44	517	-24	5284	1.61	16.19	0.03
346	SLU 45	531	-25	5396	1.65	16.61	0.03
346	SLU 46	531	-25	5396	1.64	16.61	0.03
346	SLU 47	526	-25	5359	1.63	16.42	0.03
346	SLU 48	540	-26	5471	1.66	16.84	0.03
346	SLU 49	540	-26	5471	1.66	16.84	0.03
346	SLU 50	534	-25	5433	1.65	16.65	0.03
346	SLU 51	534	-25	5433	1.64	16.65	0.03
346	SLU 52	571	-27	5883	1.86	17.79	0.03
346	SLU 53	585	-28	5995	1.9	18.21	0.03
346	SLU 54	585	-28	5995	1.9	18.21	0.03
346	SLU 55	580	-28	5958	1.88	18.02	0.03
346	SLU 56	594	-28	6070	1.92	18.44	0.03
346	SLU 57	594	-28	6070	1.91	18.44	0.03
346	SLU 58	588	-28	6032	1.9	18.25	0.03
346	SLU 59	588	-28	6032	1.9	18.24	0.03
346	SLU 60	594	-28	6140	1.98	18.48	0.03
346	SLU 61	594	-28	6140	1.98	18.48	0.03
346	SLU 62	603	-29	6214	2	18.7	0.03
346	SLU 63	603	-29	6214	1.99	18.7	0.03
346	SLU 64	572	-27	5836	1.84	17.82	0.03
346	SLU 65	572	-27	5836	1.83	17.82	0.03
346	SLU 66	586	-28	5949	1.87	18.24	0.03
346	SLU 67	586	-28	5949	1.86	18.24	0.03
346	SLU 68	580	-28	5911	1.85	18.05	0.03
346	SLU 69	594	-28	6023	1.88	18.47	0.03
346	SLU 70	594	-28	6023	1.88	18.47	0.03
346	SLU 71	589	-28	5986	1.87	18.28	0.03

Nodo	Cont.	Reazione a traslazione			Reazione a rotazione		
Ind.	N.br.	x	y	z	x	y	z
346	SLU 72	589	-28	5986	1.86	18.28	0.03
346	SLU 73	626	-30	6435	2.08	19.42	0.03
346	SLU 74	640	-31	6548	2.12	19.84	0.03
346	SLU 75	640	-31	6548	2.12	19.84	0.03
346	SLU 76	634	-31	6510	2.1	19.65	0.03
346	SLU 77	648	-31	6622	2.14	20.07	0.03
346	SLU 78	648	-31	6622	2.13	20.07	0.03
346	SLU 79	643	-31	6585	2.12	19.88	0.03
346	SLU 80	642	-31	6585	2.12	19.88	0.03
346	SLU 81	649	-31	6692	2.2	20.11	0.03
346	SLU 82	649	-31	6692	2.2	20.11	0.03
346	SLU 83	657	-32	6767	2.22	20.33	0.03
346	SLU 84	657	-32	6767	2.21	20.33	0.03
346	SLE RA 1	428	-20	4368	1.36	13.35	0.02
346	SLE RA 2	428	-20	4368	1.36	13.35	0.02
346	SLE RA 3	437	-21	4443	1.38	13.63	0.02
346	SLE RA 4	437	-21	4443	1.38	13.63	0.02
346	SLE RA 5	433	-21	4418	1.37	13.5	0.02
346	SLE RA 6	443	-21	4493	1.39	13.78	0.02
346	SLE RA 7	443	-21	4493	1.39	13.78	0.02
346	SLE RA 8	439	-21	4468	1.38	13.65	0.02
346	SLE RA 9	439	-21	4468	1.38	13.65	0.02
346	SLE RA 10	464	-22	4767	1.53	14.42	0.02
346	SLE RA 11	473	-23	4842	1.55	14.7	0.02
346	SLE RA 12	473	-23	4842	1.55	14.7	0.02
346	SLE RA 13	469	-23	4817	1.54	14.57	0.02
346	SLE RA 14	479	-23	4892	1.56	14.85	0.02
346	SLE RA 15	479	-23	4892	1.56	14.85	0.02
346	SLE RA 16	475	-23	4867	1.55	14.72	0.02
346	SLE RA 17	475	-23	4867	1.55	14.72	0.02
346	SLE RA 18	479	-23	4939	1.61	14.87	0.02
346	SLE RA 19	479	-23	4939	1.6	14.87	0.02
346	SLE RA 20	485	-23	4988	1.62	15.03	0.03
346	SLE RA 21	485	-23	4988	1.61	15.03	0.03
346	SLE FR 1	428	-20	4368	1.36	13.35	0.02
346	SLE FR 2	428	-20	4368	1.36	13.35	0.02
346	SLE FR 3	430	-20	4388	1.37	13.41	0.02
346	SLE FR 4	443	-21	4539	1.44	13.81	0.02
346	SLE FR 5	446	-21	4559	1.44	13.87	0.02
346	SLE FR 6	454	-22	4653	1.49	14.11	0.02
346	SLE QP 1	428	-20	4368	1.36	13.35	0.02
346	SLE QP 2	443	-21	4539	1.44	13.81	0.02
346	SLD 1	976	-22	4521	2.45	40.05	0.03
346	SLD 2	976	-22	4521	2.45	40.05	0.03
346	SLD 3	1127	-30	5288	4.28	45.57	0.04
346	SLD 4	1127	-30	5288	4.28	45.57	0.04
346	SLD 5	373	-10	3370	-1.04	13.31	0.01
346	SLD 6	373	-10	3370	-1.04	13.31	0.01
346	SLD 7	878	-35	5928	5.07	31.71	0.04
346	SLD 8	878	-35	5928	5.07	31.71	0.04
346	SLD 9	8	-7	3151	-2.2	-4.09	0
346	SLD 10	8	-7	3151	-2.2	-4.09	0
346	SLD 11	513	-33	5708	3.91	14.31	0.03
346	SLD 12	513	-33	5708	3.91	14.31	0.03
346	SLD 13	-241	-13	3790	-1.41	-17.95	0
346	SLD 14	-241	-13	3790	-1.41	-17.95	0
346	SLD 15	-89	-20	4558	0.42	-12.43	0.01
346	SLD 16	-89	-20	4558	0.42	-12.43	0.01
346	SLV 1	1680	-23	4475	3.73	74.78	0.04
346	SLV 2	1680	-23	4475	3.73	74.78	0.04
346	SLV 3	2043	-41	6319	8.17	88.03	0.07
346	SLV 4	2043	-41	6319	8.17	88.03	0.07
346	SLV 5	262	6	1723	-4.6	12.01	0
346	SLV 6	262	6	1723	-4.6	12.01	0
346	SLV 7	1475	-55	7871	10.18	56.17	0.07
346	SLV 8	1475	-55	7871	10.18	56.17	0.07
346	SLV 9	-589	12	1208	-7.31	-28.55	-0.02
346	SLV 10	-589	12	1208	-7.31	-28.55	-0.02
346	SLV 11	624	-48	7356	7.48	15.61	0.05
346	SLV 12	624	-48	7356	7.48	15.61	0.05
346	SLV 13	-1157	-1	2760	-5.3	-60.41	-0.02
346	SLV 14	-1157	-1	2760	-5.3	-60.41	-0.02
346	SLV 15	-793	-20	4604	-0.86	-47.16	0
346	SLV 16	-793	-20	4604	-0.86	-47.16	0
347	SLU 1	319	-410	5918	-0.7	21.58	0.02
347	SLU 2	319	-409	5917	-0.74	21.59	0.02
347	SLU 3	330	-421	6080	-0.83	22.33	0.02
347	SLU 4	330	-421	6079	-0.85	22.33	0.02
347	SLU 5	325	-416	6024	-0.84	22.04	0.02
347	SLU 6	336	-429	6186	-0.92	22.77	0.02
347	SLU 7	336	-428	6186	-0.95	22.78	0.02
347	SLU 8	331	-425	6132	-0.89	22.47	0.02
347	SLU 9	331	-424	6131	-0.92	22.48	0.02
347	SLU 10	359	-465	6748	-0.92	24.49	0.02
347	SLU 11	370	-478	6911	-1	25.23	0.02
347	SLU 12	370	-477	6910	-1.03	25.24	0.02
347	SLU 13	365	-473	6855	-1.02	24.94	0.02
347	SLU 14	376	-486	7017	-1.1	25.68	0.02
347	SLU 15	376	-485	7017	-1.13	25.68	0.02
347	SLU 16	371	-481	6963	-1.07	25.38	0.02

Nodo	Cont.	Reazione a traslazione			Reazione a rotazione		
Ind.	N.br.	x	y	z	x	y	z
347	SLU 17	371	-481	6962	-1.1	25.38	0.02
347	SLU 18	376	-490	7105	-0.95	25.72	0.02
347	SLU 19	377	-490	7105	-0.98	25.73	0.02
347	SLU 20	382	-498	7212	-1.05	26.17	0.02
347	SLU 21	383	-498	7212	-1.08	26.18	0.02
347	SLU 22	360	-463	6690	-0.96	24.5	0.02
347	SLU 23	360	-462	6689	-1.01	24.52	0.02
347	SLU 24	371	-475	6851	-1.09	25.25	0.02
347	SLU 25	371	-474	6851	-1.12	25.26	0.02
347	SLU 26	366	-470	6796	-1.11	24.96	0.02
347	SLU 27	377	-482	6958	-1.19	25.7	0.02
347	SLU 28	377	-482	6957	-1.22	25.71	0.02
347	SLU 29	372	-478	6904	-1.16	25.4	0.02
347	SLU 30	372	-478	6903	-1.18	25.41	0.02
347	SLU 31	401	-519	7520	-1.19	27.42	0.03
347	SLU 32	411	-531	7682	-1.27	28.16	0.03
347	SLU 33	411	-531	7681	-1.3	28.16	0.03
347	SLU 34	407	-526	7627	-1.28	27.87	0.03
347	SLU 35	417	-539	7789	-1.37	28.61	0.03
347	SLU 36	417	-538	7788	-1.39	28.61	0.03
347	SLU 37	412	-535	7734	-1.33	28.31	0.03
347	SLU 38	413	-534	7734	-1.36	28.31	0.03
347	SLU 39	418	-544	7877	-1.22	28.65	0.03
347	SLU 40	418	-543	7876	-1.24	28.66	0.03
347	SLU 41	424	-551	7984	-1.31	29.1	0.03
347	SLU 42	424	-551	7983	-1.34	29.11	0.03
347	SLU 43	400	-514	7429	-0.82	27.05	0.03
347	SLU 44	401	-513	7428	-0.86	27.06	0.03
347	SLU 45	411	-526	7591	-0.95	27.79	0.03
347	SLU 46	411	-526	7590	-0.97	27.8	0.03
347	SLU 47	407	-521	7535	-0.96	27.51	0.03
347	SLU 48	417	-534	7697	-1.04	28.24	0.03
347	SLU 49	417	-533	7697	-1.07	28.25	0.03
347	SLU 50	412	-529	7643	-1.01	27.94	0.03
347	SLU 51	413	-529	7642	-1.04	27.95	0.03
347	SLU 52	441	-570	8259	-1.04	29.96	0.03
347	SLU 53	451	-583	8422	-1.12	30.7	0.03
347	SLU 54	451	-582	8421	-1.15	30.7	0.03
347	SLU 55	447	-578	8366	-1.14	30.41	0.03
347	SLU 56	457	-590	8528	-1.22	31.15	0.03
347	SLU 57	457	-590	8528	-1.25	31.15	0.03
347	SLU 58	453	-586	8474	-1.19	30.85	0.03
347	SLU 59	453	-586	8473	-1.21	30.85	0.03
347	SLU 60	458	-595	8616	-1.07	31.19	0.03
347	SLU 61	458	-595	8616	-1.1	31.2	0.03
347	SLU 62	464	-603	8723	-1.17	31.64	0.03
347	SLU 63	464	-602	8723	-1.19	31.65	0.03
347	SLU 64	442	-567	8201	-1.08	29.97	0.03
347	SLU 65	442	-567	8200	-1.13	29.98	0.03
347	SLU 66	452	-579	8362	-1.21	30.72	0.03
347	SLU 67	452	-579	8362	-1.24	30.73	0.03
347	SLU 68	448	-574	8307	-1.23	30.43	0.03
347	SLU 69	458	-587	8469	-1.31	31.17	0.03
347	SLU 70	458	-586	8468	-1.33	31.18	0.03
347	SLU 71	454	-583	8415	-1.28	30.87	0.03
347	SLU 72	454	-582	8414	-1.3	30.88	0.03
347	SLU 73	482	-623	9031	-1.31	32.89	0.03
347	SLU 74	493	-636	9193	-1.39	33.63	0.03
347	SLU 75	493	-635	9192	-1.42	33.63	0.03
347	SLU 76	488	-631	9138	-1.4	33.34	0.03
347	SLU 77	499	-643	9300	-1.48	34.07	0.03
347	SLU 78	499	-643	9299	-1.51	34.08	0.03
347	SLU 79	494	-639	9245	-1.45	33.77	0.03
347	SLU 80	494	-639	9245	-1.48	33.78	0.03
347	SLU 81	499	-648	9388	-1.34	34.12	0.03
347	SLU 82	499	-648	9387	-1.36	34.13	0.03
347	SLU 83	505	-656	9495	-1.43	34.57	0.03
347	SLU 84	505	-655	9494	-1.46	34.58	0.03
347	SLE RA 1	331	-425	6139	-0.78	22.41	0.02
347	SLE RA 2	331	-424	6138	-0.81	22.42	0.02
347	SLE RA 3	338	-433	6246	-0.86	22.91	0.02
347	SLE RA 4	338	-432	6246	-0.88	22.92	0.02
347	SLE RA 5	335	-429	6209	-0.87	22.72	0.02
347	SLE RA 6	342	-438	6318	-0.92	23.21	0.02
347	SLE RA 7	342	-437	6317	-0.94	23.22	0.02
347	SLE RA 8	339	-435	6281	-0.9	23.01	0.02
347	SLE RA 9	339	-435	6281	-0.92	23.02	0.02
347	SLE RA 10	358	-462	6692	-0.92	24.36	0.02
347	SLE RA 11	365	-470	6800	-0.98	24.85	0.02
347	SLE RA 12	365	-470	6800	-1	24.85	0.02
347	SLE RA 13	362	-467	6763	-0.99	24.66	0.02
347	SLE RA 14	369	-475	6871	-1.04	25.15	0.02
347	SLE RA 15	369	-475	6871	-1.06	25.15	0.02
347	SLE RA 16	366	-473	6835	-1.02	24.95	0.02
347	SLE RA 17	366	-472	6835	-1.04	24.95	0.02
347	SLE RA 18	369	-479	6930	-0.94	25.18	0.02
347	SLE RA 19	369	-478	6930	-0.96	25.18	0.02
347	SLE RA 20	373	-484	7001	-1.01	25.48	0.02
347	SLE RA 21	373	-483	7001	-1.03	25.48	0.02
347	SLE FR 1	331	-425	6139	-0.78	22.41	0.02

Nodo	Cont.	Reazione a traslazione			Reazione a rotazione		
Ind.	N.br.	x	y	z	x	y	z
347	SLE FR 2	331	-425	6139	-0.78	22.41	0.02
347	SLE FR 3	332	-427	6167	-0.8	22.53	0.02
347	SLE FR 4	342	-441	6376	-0.83	23.24	0.02
347	SLE FR 5	344	-443	6405	-0.85	23.36	0.02
347	SLE FR 6	350	-452	6535	-0.86	23.8	0.02
347	SLE QP 1	331	-425	6139	-0.78	22.41	0.02
347	SLE QP 2	342	-441	6376	-0.83	23.24	0.02
347	SLD 1	909	-391	6229	-3.56	50.56	0.06
347	SLD 2	909	-391	6229	-3.56	50.56	0.06
347	SLD 3	975	-654	7552	7.52	54.59	0.07
347	SLD 4	975	-654	7552	7.52	54.59	0.07
347	SLD 5	412	-27	4326	-18.45	25.32	0.03
347	SLD 6	412	-27	4326	-18.45	25.32	0.03
347	SLD 7	632	-904	8735	18.48	38.76	0.04
347	SLD 8	632	-904	8735	18.48	38.76	0.04
347	SLD 9	52	22	4018	-20.13	7.72	0
347	SLD 10	52	22	4018	-20.13	7.72	0
347	SLD 11	272	-855	8426	16.8	21.17	0.02
347	SLD 12	272	-855	8426	16.8	21.17	0.02
347	SLD 13	-290	-228	5201	-9.17	-8.1	-0.02
347	SLD 14	-290	-228	5201	-9.17	-8.1	-0.02
347	SLD 15	-224	-491	6523	1.91	-4.07	-0.02
347	SLD 16	-224	-491	6523	1.91	-4.07	-0.02
347	SLV 1	1661	-317	5996	-7.43	86.81	0.11
347	SLV 2	1661	-317	5996	-7.43	86.81	0.11
347	SLV 3	1818	-950	9176	19.17	96.43	0.12
347	SLV 4	1818	-950	9176	19.17	96.43	0.12
347	SLV 5	499	556	1440	-43.15	27.72	0.03
347	SLV 6	499	556	1440	-43.15	27.72	0.03
347	SLV 7	1023	-1553	12039	45.52	59.79	0.07
347	SLV 8	1023	-1553	12039	45.52	59.79	0.07
347	SLV 9	-339	671	714	-47.17	-13.3	-0.03
347	SLV 10	-339	671	714	-47.17	-13.3	-0.03
347	SLV 11	185	-1438	11313	41.5	18.76	0.02
347	SLV 12	185	-1438	11313	41.5	18.76	0.02
347	SLV 13	-1134	68	3577	-20.82	-49.94	-0.08
347	SLV 14	-1134	68	3577	-20.82	-49.94	-0.08
347	SLV 15	-977	-564	6756	5.78	-40.32	-0.07
347	SLV 16	-977	-564	6756	5.78	-40.32	-0.07
348	SLU 1	33	-10	4404	-2.38	-2.03	0.02
348	SLU 2	34	-10	4405	-2.38	-2.01	0.02
348	SLU 3	33	-11	4522	-2.47	-2.19	0.02
348	SLU 4	33	-11	4522	-2.47	-2.18	0.02
348	SLU 5	32	-11	4482	-2.44	-2.18	0.02
348	SLU 6	32	-11	4599	-2.53	-2.35	0.02
348	SLU 7	32	-11	4599	-2.53	-2.34	0.02
348	SLU 8	30	-11	4560	-2.49	-2.36	0.02
348	SLU 9	31	-11	4560	-2.5	-2.35	0.02
348	SLU 10	33	-12	5020	-2.79	-2.58	0.02
348	SLU 11	32	-12	5137	-2.88	-2.75	0.02
348	SLU 12	33	-12	5137	-2.88	-2.74	0.02
348	SLU 13	32	-12	5098	-2.85	-2.74	0.02
348	SLU 14	31	-12	5215	-2.94	-2.91	0.02
348	SLU 15	31	-12	5215	-2.94	-2.9	0.02
348	SLU 16	30	-12	5175	-2.9	-2.92	0.02
348	SLU 17	30	-12	5175	-2.9	-2.91	0.02
348	SLU 18	32	-12	5284	-2.96	-2.83	0.02
348	SLU 19	33	-12	5284	-2.96	-2.82	0.02
348	SLU 20	31	-12	5362	-3.02	-3	0.02
348	SLU 21	31	-12	5362	-3.02	-2.99	0.02
348	SLU 22	34	-12	4974	-2.77	-2.54	0.02
348	SLU 23	34	-12	4974	-2.78	-2.52	0.02
348	SLU 24	33	-12	5091	-2.87	-2.7	0.02
348	SLU 25	34	-12	5091	-2.87	-2.69	0.02
348	SLU 26	33	-12	5052	-2.84	-2.69	0.02
348	SLU 27	32	-12	5169	-2.92	-2.86	0.02
348	SLU 28	32	-12	5169	-2.93	-2.85	0.02
348	SLU 29	31	-12	5129	-2.89	-2.87	0.02
348	SLU 30	31	-12	5129	-2.89	-2.86	0.02
348	SLU 31	34	-13	5590	-3.19	-3.09	0.02
348	SLU 32	33	-13	5707	-3.27	-3.26	0.02
348	SLU 33	33	-13	5707	-3.28	-3.25	0.02
348	SLU 34	32	-13	5667	-3.24	-3.25	0.02
348	SLU 35	31	-13	5784	-3.33	-3.42	0.02
348	SLU 36	32	-13	5784	-3.33	-3.41	0.02
348	SLU 37	30	-13	5745	-3.3	-3.43	0.02
348	SLU 38	30	-13	5745	-3.3	-3.42	0.02
348	SLU 39	33	-13	5854	-3.36	-3.34	0.02
348	SLU 40	33	-13	5854	-3.36	-3.33	0.02
348	SLU 41	31	-14	5931	-3.41	-3.51	0.02
348	SLU 42	32	-14	5931	-3.42	-3.5	0.02
348	SLU 43	43	-13	5530	-2.95	-2.46	0.02
348	SLU 44	44	-13	5531	-2.96	-2.45	0.02
348	SLU 45	43	-13	5648	-3.05	-2.62	0.02
348	SLU 46	43	-13	5648	-3.05	-2.61	0.02
348	SLU 47	42	-13	5608	-3.02	-2.61	0.02
348	SLU 48	41	-14	5725	-3.1	-2.78	0.02
348	SLU 49	42	-14	5725	-3.11	-2.78	0.02
348	SLU 50	40	-13	5686	-3.07	-2.79	0.02
348	SLU 51	41	-13	5686	-3.07	-2.78	0.02

Nodo	Cont.	Reazione a traslazione			Reazione a rotazione		
Ind.	N.br.	x	y	z	x	y	z
348	SLU 52	43	-14	6146	-3.37	-3.01	0.02
348	SLU 53	42	-15	6263	-3.45	-3.18	0.03
348	SLU 54	42	-15	6263	-3.46	-3.17	0.03
348	SLU 55	42	-14	6224	-3.42	-3.17	0.02
348	SLU 56	41	-15	6341	-3.51	-3.35	0.03
348	SLU 57	41	-15	6341	-3.51	-3.34	0.03
348	SLU 58	40	-15	6301	-3.48	-3.35	0.03
348	SLU 59	40	-15	6301	-3.48	-3.34	0.03
348	SLU 60	42	-15	6410	-3.54	-3.27	0.03
348	SLU 61	43	-15	6410	-3.54	-3.26	0.03
348	SLU 62	41	-15	6488	-3.6	-3.43	0.03
348	SLU 63	41	-15	6488	-3.6	-3.42	0.03
348	SLU 64	44	-14	6100	-3.35	-2.97	0.02
348	SLU 65	44	-14	6100	-3.36	-2.96	0.02
348	SLU 66	43	-15	6217	-3.44	-3.13	0.02
348	SLU 67	44	-15	6217	-3.45	-3.12	0.02
348	SLU 68	43	-14	6178	-3.41	-3.12	0.02
348	SLU 69	42	-15	6295	-3.5	-3.29	0.03
348	SLU 70	42	-15	6295	-3.5	-3.28	0.03
348	SLU 71	41	-15	6255	-3.47	-3.3	0.03
348	SLU 72	41	-15	6255	-3.47	-3.29	0.03
348	SLU 73	43	-15	6716	-3.76	-3.52	0.03
348	SLU 74	43	-16	6833	-3.85	-3.69	0.03
348	SLU 75	43	-16	6833	-3.85	-3.68	0.03
348	SLU 76	42	-16	6793	-3.82	-3.68	0.03
348	SLU 77	41	-16	6910	-3.91	-3.86	0.03
348	SLU 78	41	-16	6911	-3.91	-3.85	0.03
348	SLU 79	40	-16	6871	-3.88	-3.86	0.03
348	SLU 80	40	-16	6871	-3.88	-3.85	0.03
348	SLU 81	43	-16	6980	-3.93	-3.78	0.03
348	SLU 82	43	-16	6980	-3.94	-3.77	0.03
348	SLU 83	41	-16	7057	-3.99	-3.94	0.03
348	SLU 84	42	-16	7057	-3.99	-3.93	0.03
348	SLE RA 1	34	-11	4567	-2.49	-2.17	0.02
348	SLE RA 2	34	-11	4567	-2.49	-2.16	0.02
348	SLE RA 3	33	-11	4645	-2.55	-2.28	0.02
348	SLE RA 4	33	-11	4645	-2.55	-2.27	0.02
348	SLE RA 5	33	-11	4619	-2.53	-2.27	0.02
348	SLE RA 6	32	-11	4697	-2.59	-2.39	0.02
348	SLE RA 7	32	-11	4697	-2.59	-2.38	0.02
348	SLE RA 8	32	-11	4671	-2.57	-2.39	0.02
348	SLE RA 9	32	-11	4671	-2.57	-2.39	0.02
348	SLE RA 10	33	-11	4978	-2.77	-2.54	0.02
348	SLE RA 11	33	-12	5056	-2.82	-2.65	0.02
348	SLE RA 12	33	-12	5056	-2.83	-2.65	0.02
348	SLE RA 13	32	-12	5029	-2.8	-2.65	0.02
348	SLE RA 14	32	-12	5107	-2.86	-2.76	0.02
348	SLE RA 15	32	-12	5107	-2.86	-2.76	0.02
348	SLE RA 16	31	-12	5081	-2.84	-2.77	0.02
348	SLE RA 17	31	-12	5081	-2.84	-2.76	0.02
348	SLE RA 18	33	-12	5154	-2.88	-2.71	0.02
348	SLE RA 19	33	-12	5154	-2.88	-2.7	0.02
348	SLE RA 20	32	-12	5205	-2.92	-2.82	0.02
348	SLE RA 21	32	-12	5205	-2.92	-2.81	0.02
348	SLE FR 1	34	-11	4567	-2.49	-2.17	0.02
348	SLE FR 2	34	-11	4567	-2.49	-2.17	0.02
348	SLE FR 3	33	-11	4588	-2.51	-2.22	0.02
348	SLE FR 4	33	-11	4743	-2.61	-2.33	0.02
348	SLE FR 5	33	-11	4764	-2.62	-2.38	0.02
348	SLE FR 6	33	-11	4860	-2.69	-2.44	0.02
348	SLE QP 1	34	-11	4567	-2.49	-2.17	0.02
348	SLE QP 2	33	-11	4743	-2.61	-2.34	0.02
348	SLD 1	670	-12	4627	-6.19	27.72	0.02
348	SLD 2	670	-12	4627	-6.19	27.72	0.02
348	SLD 3	579	-21	5428	-4.69	24.17	0.04
348	SLD 4	579	-21	5428	-4.69	24.17	0.04
348	SLD 5	361	2	3494	-5.96	12.06	0
348	SLD 6	361	2	3494	-5.96	12.06	0
348	SLD 7	60	-27	6163	-0.96	0.24	0.05
348	SLD 8	60	-27	6163	-0.96	0.24	0.05
348	SLD 9	7	5	3324	-4.26	-4.91	-0.01
348	SLD 10	7	5	3324	-4.26	-4.91	-0.01
348	SLD 11	-295	-24	5992	0.75	-16.73	0.04
348	SLD 12	-295	-24	5992	0.75	-16.73	0.04
348	SLD 13	-513	-1	4058	-0.52	-28.84	0
348	SLD 14	-513	-1	4058	-0.52	-28.84	0
348	SLD 15	-603	-10	4859	0.98	-32.39	0.02
348	SLD 16	-603	-10	4859	0.98	-32.39	0.02
348	SLV 1	1519	-14	4451	-11.03	67.85	0.03
348	SLV 2	1519	-14	4451	-11.03	67.85	0.03
348	SLV 3	1302	-34	6373	-7.46	59.29	0.06
348	SLV 4	1302	-34	6373	-7.46	59.29	0.06
348	SLV 5	809	19	1741	-10.55	31.7	-0.03
348	SLV 6	809	19	1741	-10.55	31.7	-0.03
348	SLV 7	84	-48	8146	1.35	3.17	0.08
348	SLV 8	84	-48	8146	1.35	3.17	0.08
348	SLV 9	-18	26	1340	-6.56	-7.84	-0.04
348	SLV 10	-18	26	1340	-6.56	-7.84	-0.04
348	SLV 11	-742	-41	7745	5.33	-36.37	0.07
348	SLV 12	-742	-41	7745	5.33	-36.37	0.07

Nodo	Cont.	Reazione a traslazione			Reazione a rotazione		
Ind.	N.br.	x	y	z	x	y	z
348	SLV 13	-1235	12	3114	2.25	-63.96	-0.02
348	SLV 14	-1235	12	3114	2.25	-63.96	-0.02
348	SLV 15	-1453	-8	5035	5.81	-72.52	0.01
348	SLV 16	-1453	-8	5035	5.81	-72.52	0.01
349	SLU 1	16	7	4156	-10.24	6.79	0.03
349	SLU 2	16	7	4156	-10.25	6.8	0.03
349	SLU 3	15	7	4264	-10.62	6.96	0.03
349	SLU 4	15	7	4264	-10.62	6.97	0.03
349	SLU 5	14	7	4228	-10.49	6.86	0.03
349	SLU 6	12	7	4335	-10.87	7.01	0.03
349	SLU 7	13	7	4335	-10.87	7.02	0.03
349	SLU 8	12	7	4298	-10.73	6.9	0.03
349	SLU 9	12	7	4299	-10.73	6.9	0.03
349	SLU 10	13	8	4734	-11.81	7.6	0.04
349	SLU 11	12	8	4841	-12.18	7.75	0.04
349	SLU 12	12	8	4841	-12.18	7.76	0.04
349	SLU 13	11	8	4805	-12.05	7.65	0.04
349	SLU 14	10	9	4912	-12.43	7.8	0.04
349	SLU 15	10	9	4912	-12.43	7.81	0.04
349	SLU 16	9	9	4876	-12.29	7.69	0.04
349	SLU 17	9	9	4876	-12.29	7.7	0.04
349	SLU 18	12	9	4980	-12.47	7.92	0.04
349	SLU 19	12	9	4981	-12.47	7.93	0.04
349	SLU 20	10	9	5052	-12.72	7.97	0.04
349	SLU 21	10	9	5052	-12.72	7.98	0.04
349	SLU 22	14	8	4688	-11.78	7.61	0.04
349	SLU 23	14	8	4689	-11.78	7.62	0.04
349	SLU 24	13	8	4796	-12.16	7.78	0.04
349	SLU 25	13	8	4796	-12.16	7.79	0.04
349	SLU 26	12	8	4760	-12.03	7.67	0.04
349	SLU 27	11	9	4867	-12.4	7.83	0.04
349	SLU 28	11	9	4868	-12.4	7.84	0.04
349	SLU 29	10	8	4831	-12.27	7.71	0.04
349	SLU 30	10	8	4831	-12.27	7.72	0.04
349	SLU 31	12	9	5266	-13.34	8.41	0.04
349	SLU 32	10	10	5373	-13.72	8.57	0.04
349	SLU 33	10	10	5374	-13.72	8.58	0.04
349	SLU 34	10	9	5337	-13.59	8.47	0.04
349	SLU 35	8	10	5444	-13.96	8.62	0.04
349	SLU 36	8	10	5445	-13.96	8.63	0.04
349	SLU 37	7	10	5408	-13.83	8.51	0.04
349	SLU 38	7	10	5408	-13.83	8.51	0.04
349	SLU 39	10	10	5513	-14.01	8.74	0.04
349	SLU 40	10	10	5513	-14.01	8.75	0.04
349	SLU 41	8	10	5584	-14.25	8.79	0.04
349	SLU 42	8	10	5584	-14.25	8.8	0.04
349	SLU 43	21	9	5220	-12.79	8.55	0.04
349	SLU 44	22	9	5221	-12.79	8.56	0.04
349	SLU 45	20	9	5328	-13.17	8.71	0.04
349	SLU 46	20	9	5328	-13.17	8.72	0.04
349	SLU 47	19	9	5292	-13.04	8.61	0.04
349	SLU 48	18	9	5399	-13.41	8.77	0.04
349	SLU 49	18	9	5399	-13.42	8.78	0.04
349	SLU 50	17	9	5363	-13.28	8.65	0.04
349	SLU 51	17	9	5363	-13.28	8.66	0.04
349	SLU 52	19	10	5798	-14.35	9.35	0.04
349	SLU 53	17	10	5905	-14.73	9.51	0.04
349	SLU 54	17	10	5905	-14.73	9.52	0.04
349	SLU 55	17	10	5869	-14.6	9.41	0.04
349	SLU 56	15	10	5976	-14.97	9.56	0.05
349	SLU 57	15	10	5977	-14.98	9.57	0.05
349	SLU 58	14	10	5940	-14.84	9.44	0.05
349	SLU 59	14	10	5940	-14.84	9.45	0.05
349	SLU 60	17	10	6045	-15.02	9.68	0.05
349	SLU 61	18	10	6045	-15.02	9.69	0.05
349	SLU 62	15	11	6116	-15.26	9.73	0.05
349	SLU 63	15	11	6116	-15.27	9.74	0.05
349	SLU 64	19	10	5753	-14.32	9.36	0.04
349	SLU 65	20	10	5753	-14.33	9.38	0.04
349	SLU 66	18	10	5860	-14.7	9.53	0.04
349	SLU 67	18	10	5861	-14.7	9.54	0.04
349	SLU 68	18	10	5824	-14.57	9.43	0.04
349	SLU 69	16	10	5932	-14.95	9.59	0.05
349	SLU 70	16	10	5932	-14.95	9.6	0.05
349	SLU 71	15	10	5895	-14.81	9.47	0.05
349	SLU 72	15	10	5895	-14.82	9.48	0.05
349	SLU 73	17	11	6330	-15.89	10.17	0.05
349	SLU 74	15	11	6437	-16.26	10.33	0.05
349	SLU 75	16	11	6438	-16.26	10.33	0.05
349	SLU 76	15	11	6402	-16.13	10.22	0.05
349	SLU 77	13	11	6509	-16.51	10.38	0.05
349	SLU 78	13	11	6509	-16.51	10.39	0.05
349	SLU 79	12	11	6472	-16.37	10.26	0.05
349	SLU 80	13	11	6473	-16.38	10.27	0.05
349	SLU 81	16	12	6577	-16.55	10.5	0.05
349	SLU 82	16	12	6577	-16.55	10.5	0.05
349	SLU 83	13	12	6648	-16.8	10.55	0.05
349	SLU 84	14	12	6649	-16.8	10.56	0.05
349	SLE RA 1	15	7	4308	-10.68	7.02	0.03
349	SLE RA 2	16	7	4308	-10.68	7.03	0.03

Nodo	Cont.	Reazione a traslazione			Reazione a rotazione		
Ind.	N.br.	x	y	z	x	y	z
349	SLE RA 3	14	7	4380	-10.93	7.14	0.03
349	SLE RA 4	15	7	4380	-10.94	7.14	0.03
349	SLE RA 5	14	7	4356	-10.85	7.07	0.03
349	SLE RA 6	13	8	4427	-11.1	7.17	0.03
349	SLE RA 7	13	8	4428	-11.1	7.18	0.03
349	SLE RA 8	12	8	4403	-11.01	7.09	0.03
349	SLE RA 9	13	8	4403	-11.01	7.1	0.03
349	SLE RA 10	14	8	4693	-11.72	7.56	0.04
349	SLE RA 11	13	8	4765	-11.97	7.66	0.04
349	SLE RA 12	13	8	4765	-11.98	7.67	0.04
349	SLE RA 13	12	8	4741	-11.89	7.6	0.04
349	SLE RA 14	11	8	4812	-12.14	7.7	0.04
349	SLE RA 15	11	8	4812	-12.14	7.71	0.04
349	SLE RA 16	11	8	4788	-12.05	7.62	0.04
349	SLE RA 17	11	8	4788	-12.05	7.63	0.04
349	SLE RA 18	13	8	4858	-12.17	7.78	0.04
349	SLE RA 19	13	8	4858	-12.17	7.78	0.04
349	SLE RA 20	11	9	4905	-12.33	7.81	0.04
349	SLE RA 21	11	9	4905	-12.33	7.82	0.04
349	SLE FR 1	15	7	4308	-10.68	7.02	0.03
349	SLE FR 2	15	7	4308	-10.68	7.02	0.03
349	SLE FR 3	15	7	4327	-10.75	7.04	0.03
349	SLE FR 4	15	8	4473	-11.13	7.25	0.03
349	SLE FR 5	14	8	4492	-11.19	7.26	0.03
349	SLE FR 6	14	8	4583	-11.42	7.4	0.03
349	SLE QP 1	15	7	4308	-10.68	7.02	0.03
349	SLE QP 2	15	8	4473	-11.13	7.25	0.03
349	SLD 1	655	12	3963	-13.65	37.47	0.04
349	SLD 2	655	12	3963	-13.65	37.47	0.04
349	SLD 3	566	18	4593	-17.73	34.04	0.06
349	SLD 4	566	18	4593	-17.73	34.04	0.06
349	SLD 5	343	0	3363	-5.69	21.52	0
349	SLD 6	343	0	3363	-5.69	21.52	0
349	SLD 7	44	19	5466	-19.3	10.08	0.07
349	SLD 8	44	19	5466	-19.3	10.08	0.07
349	SLD 9	-15	-4	3480	-2.95	4.41	-0.01
349	SLD 10	-15	-4	3480	-2.95	4.41	-0.01
349	SLD 11	-313	15	5583	-16.56	-7.02	0.07
349	SLD 12	-313	15	5583	-16.56	-7.02	0.07
349	SLD 13	-537	-3	4353	-4.52	-19.54	0.01
349	SLD 14	-537	-3	4353	-4.52	-19.54	0.01
349	SLD 15	-626	3	4983	-8.6	-22.97	0.03
349	SLD 16	-626	3	4983	-8.6	-22.97	0.03
349	SLV 1	1510	19	3259	-17.01	77.73	0.04
349	SLV 2	1510	19	3259	-17.01	77.73	0.04
349	SLV 3	1296	32	4770	-26.6	69.62	0.09
349	SLV 4	1296	32	4770	-26.6	69.62	0.09
349	SLV 5	787	-10	1817	1.66	40.7	-0.04
349	SLV 6	787	-10	1817	1.66	40.7	-0.04
349	SLV 7	75	35	6854	-30.32	13.65	0.13
349	SLV 8	75	35	6854	-30.32	13.65	0.13
349	SLV 9	-46	-20	2092	8.07	0.85	-0.06
349	SLV 10	-46	-20	2092	8.07	0.85	-0.06
349	SLV 11	-758	25	7129	-23.92	-26.2	0.11
349	SLV 12	-758	25	7129	-23.92	-26.2	0.11
349	SLV 13	-1267	-17	4176	4.35	-55.12	-0.03
349	SLV 14	-1267	-17	4176	4.35	-55.12	-0.03
349	SLV 15	-1481	-3	5687	-5.25	-63.23	0.02
349	SLV 16	-1481	-3	5687	-5.25	-63.23	0.02
350	SLU 1	-150	23	3922	-18.37	-9.58	0.06
350	SLU 2	-150	23	3923	-18.38	-9.57	0.06
350	SLU 3	-158	23	4021	-19.05	-10.04	0.06
350	SLU 4	-158	23	4021	-19.06	-10.03	0.06
350	SLU 5	-157	23	3988	-18.82	-9.94	0.06
350	SLU 6	-165	24	4086	-19.5	-10.41	0.07
350	SLU 7	-164	24	4087	-19.5	-10.4	0.07
350	SLU 8	-164	24	4053	-19.26	-10.32	0.06
350	SLU 9	-163	24	4053	-19.26	-10.32	0.06
350	SLU 10	-178	26	4463	-21.1	-11.23	0.07
350	SLU 11	-185	27	4561	-21.78	-11.69	0.07
350	SLU 12	-185	27	4562	-21.78	-11.69	0.07
350	SLU 13	-184	26	4528	-21.54	-11.6	0.07
350	SLU 14	-192	27	4627	-22.22	-12.06	0.07
350	SLU 15	-192	27	4627	-22.22	-12.06	0.07
350	SLU 16	-191	27	4593	-21.98	-11.98	0.07
350	SLU 17	-191	27	4593	-21.98	-11.98	0.07
350	SLU 18	-190	27	4694	-22.26	-11.95	0.07
350	SLU 19	-189	27	4694	-22.26	-11.95	0.07
350	SLU 20	-196	28	4759	-22.7	-12.32	0.08
350	SLU 21	-196	28	4760	-22.71	-12.32	0.08
350	SLU 22	-176	26	4419	-21.07	-11.18	0.07
350	SLU 23	-176	26	4420	-21.08	-11.16	0.07
350	SLU 24	-184	27	4518	-21.75	-11.63	0.07
350	SLU 25	-184	27	4518	-21.75	-11.62	0.07
350	SLU 26	-183	26	4485	-21.52	-11.53	0.07
350	SLU 27	-191	27	4583	-22.19	-12	0.07
350	SLU 28	-191	27	4584	-22.2	-11.99	0.07
350	SLU 29	-190	27	4550	-21.95	-11.92	0.07
350	SLU 30	-189	27	4550	-21.96	-11.91	0.07
350	SLU 31	-204	29	4960	-23.8	-12.82	0.08

Nodo	Cont.	Reazione a traslazione			Reazione a rotazione		
Ind.	N.br.	x	y	z	x	y	z
350	SLU 32	-212	30	5058	-24.47	-13.29	0.08
350	SLU 33	-211	30	5059	-24.47	-13.28	0.08
350	SLU 34	-210	30	5025	-24.24	-13.19	0.08
350	SLU 35	-218	31	5124	-24.91	-13.66	0.08
350	SLU 36	-218	31	5124	-24.92	-13.65	0.08
350	SLU 37	-217	30	5090	-24.67	-13.57	0.08
350	SLU 38	-217	30	5090	-24.68	-13.57	0.08
350	SLU 39	-216	31	5191	-24.96	-13.55	0.08
350	SLU 40	-216	31	5191	-24.96	-13.54	0.08
350	SLU 41	-222	31	5256	-25.4	-13.92	0.08
350	SLU 42	-222	31	5257	-25.4	-13.91	0.08
350	SLU 43	-187	28	4928	-22.96	-11.91	0.08
350	SLU 44	-186	28	4929	-22.97	-11.9	0.08
350	SLU 45	-194	29	5027	-23.64	-12.36	0.08
350	SLU 46	-194	29	5028	-23.65	-12.36	0.08
350	SLU 47	-193	29	4994	-23.41	-12.27	0.08
350	SLU 48	-201	30	5093	-24.08	-12.73	0.08
350	SLU 49	-201	30	5093	-24.09	-12.73	0.08
350	SLU 50	-200	29	5059	-23.85	-12.65	0.08
350	SLU 51	-200	29	5059	-23.85	-12.65	0.08
350	SLU 52	-214	32	5469	-25.69	-13.56	0.09
350	SLU 53	-222	32	5568	-26.36	-14.02	0.09
350	SLU 54	-222	32	5568	-26.37	-14.02	0.09
350	SLU 55	-220	32	5535	-26.13	-13.93	0.09
350	SLU 56	-228	33	5633	-26.81	-14.39	0.09
350	SLU 57	-228	33	5633	-26.81	-14.39	0.09
350	SLU 58	-227	33	5599	-26.57	-14.31	0.09
350	SLU 59	-227	33	5600	-26.57	-14.31	0.09
350	SLU 60	-226	33	5700	-26.85	-14.28	0.09
350	SLU 61	-226	33	5701	-26.85	-14.28	0.09
350	SLU 62	-232	33	5765	-27.29	-14.65	0.09
350	SLU 63	-232	34	5766	-27.29	-14.65	0.09
350	SLU 64	-213	31	5425	-25.66	-13.5	0.09
350	SLU 65	-212	31	5426	-25.66	-13.49	0.09
350	SLU 66	-220	32	5524	-26.34	-13.96	0.09
350	SLU 67	-220	32	5525	-26.34	-13.95	0.09
350	SLU 68	-219	32	5491	-26.11	-13.86	0.09
350	SLU 69	-227	33	5590	-26.78	-14.33	0.09
350	SLU 70	-227	33	5590	-26.78	-14.32	0.09
350	SLU 71	-226	33	5556	-26.54	-14.24	0.09
350	SLU 72	-226	33	5556	-26.54	-14.24	0.09
350	SLU 73	-240	35	5966	-28.38	-15.15	0.09
350	SLU 74	-248	36	6065	-29.06	-15.62	0.1
350	SLU 75	-248	36	6065	-29.06	-15.61	0.1
350	SLU 76	-246	35	6032	-28.83	-15.52	0.1
350	SLU 77	-254	36	6130	-29.5	-15.99	0.1
350	SLU 78	-254	36	6130	-29.5	-15.98	0.1
350	SLU 79	-253	36	6096	-29.26	-15.9	0.1
350	SLU 80	-253	36	6097	-29.27	-15.9	0.1
350	SLU 81	-252	36	6197	-29.54	-15.88	0.1
350	SLU 82	-252	36	6198	-29.55	-15.87	0.1
350	SLU 83	-258	37	6262	-29.99	-16.25	0.1
350	SLU 84	-258	37	6263	-29.99	-16.24	0.1
350	SLE RA 1	-158	23	4064	-19.14	-10.04	0.06
350	SLE RA 2	-158	23	4064	-19.15	-10.03	0.06
350	SLE RA 3	-163	24	4130	-19.6	-10.34	0.07
350	SLE RA 4	-163	24	4130	-19.6	-10.33	0.07
350	SLE RA 5	-162	24	4108	-19.44	-10.28	0.06
350	SLE RA 6	-167	24	4174	-19.89	-10.59	0.07
350	SLE RA 7	-167	24	4174	-19.89	-10.58	0.07
350	SLE RA 8	-167	24	4151	-19.73	-10.53	0.07
350	SLE RA 9	-167	24	4151	-19.74	-10.53	0.07
350	SLE RA 10	-176	26	4425	-20.96	-11.14	0.07
350	SLE RA 11	-181	26	4490	-21.41	-11.45	0.07
350	SLE RA 12	-181	26	4491	-21.41	-11.44	0.07
350	SLE RA 13	-180	26	4468	-21.26	-11.38	0.07
350	SLE RA 14	-186	27	4534	-21.71	-11.69	0.07
350	SLE RA 15	-186	27	4534	-21.71	-11.69	0.07
350	SLE RA 16	-185	26	4511	-21.55	-11.64	0.07
350	SLE RA 17	-185	26	4512	-21.55	-11.63	0.07
350	SLE RA 18	-184	27	4579	-21.73	-11.62	0.07
350	SLE RA 19	-184	27	4579	-21.74	-11.61	0.07
350	SLE RA 20	-188	27	4622	-22.03	-11.87	0.07
350	SLE RA 21	-188	27	4622	-22.03	-11.86	0.07
350	SLE FR 1	-158	23	4064	-19.14	-10.04	0.06
350	SLE FR 2	-158	23	4064	-19.14	-10.04	0.06
350	SLE FR 3	-160	24	4081	-19.26	-10.14	0.06
350	SLE FR 4	-166	24	4218	-19.92	-10.51	0.07
350	SLE FR 5	-167	25	4236	-20.04	-10.61	0.07
350	SLE FR 6	-171	25	4321	-20.44	-10.83	0.07
350	SLE QP 1	-158	23	4064	-19.14	-10.04	0.06
350	SLE QP 2	-166	24	4218	-19.92	-10.51	0.07
350	SLD 1	486	30	3815	-20.76	19.6	0.07
350	SLD 2	486	30	3815	-20.76	19.6	0.07
350	SLD 3	387	36	4345	-29.85	15.26	0.1
350	SLD 4	387	36	4345	-29.85	15.26	0.1
350	SLD 5	181	18	3293	-6.38	5.1	0.02
350	SLD 6	181	18	3293	-6.38	5.1	0.02
350	SLD 7	-151	36	5061	-36.69	-9.36	0.13
350	SLD 8	-151	36	5061	-36.69	-9.36	0.13

Nodo	Cont.	Reazione a traslazione			Reazione a rotazione		
Ind.	N.br.	x	y	z	x	y	z
350	SLD 9	-181	12	3376	-3.15	-11.67	0.01
350	SLD 10	-181	12	3376	-3.15	-11.67	0.01
350	SLD 11	-512	31	5144	-33.46	-26.13	0.12
350	SLD 12	-512	31	5144	-33.46	-26.13	0.12
350	SLD 13	-718	13	4091	-9.99	-36.29	0.03
350	SLD 14	-718	13	4091	-9.99	-36.29	0.03
350	SLD 15	-818	19	4622	-19.08	-40.63	0.07
350	SLD 16	-818	19	4622	-19.08	-40.63	0.07
350	SLV 1	1356	37	3259	-21.85	59.77	0.07
350	SLV 2	1356	37	3259	-21.85	59.77	0.07
350	SLV 3	1119	51	4528	-43.17	49.42	0.14
350	SLV 4	1119	51	4528	-43.17	49.42	0.14
350	SLV 5	650	8	2006	11.83	26.28	-0.05
350	SLV 6	650	8	2006	11.83	26.28	-0.05
350	SLV 7	-139	53	6236	-59.23	-8.24	0.21
350	SLV 8	-139	53	6236	-59.23	-8.24	0.21
350	SLV 9	-192	-4	2201	19.39	-12.79	-0.07
350	SLV 10	-192	-4	2201	19.39	-12.79	-0.07
350	SLV 11	-981	41	6431	-51.68	-47.3	0.18
350	SLV 12	-981	41	6431	-51.68	-47.3	0.18
350	SLV 13	-1451	-2	3908	3.33	-70.44	-0.01
350	SLV 14	-1451	-2	3908	3.33	-70.44	-0.01
350	SLV 15	-1687	11	5177	-17.99	-80.8	0.07
350	SLV 16	-1687	11	5177	-17.99	-80.8	0.07
351	SLU 1	-111	31	3647	-24.31	-0.16	0.08
351	SLU 2	-111	31	3648	-24.32	-0.14	0.08
351	SLU 3	-118	33	3736	-25.22	-0.27	0.08
351	SLU 4	-118	33	3737	-25.22	-0.26	0.08
351	SLU 5	-117	32	3707	-24.91	-0.29	0.08
351	SLU 6	-124	33	3795	-25.8	-0.42	0.08
351	SLU 7	-124	33	3795	-25.81	-0.41	0.08
351	SLU 8	-123	33	3764	-25.48	-0.46	0.08
351	SLU 9	-123	33	3765	-25.49	-0.45	0.08
351	SLU 10	-133	36	4145	-27.88	-0.35	0.09
351	SLU 11	-139	37	4234	-28.77	-0.48	0.09
351	SLU 12	-139	37	4234	-28.78	-0.48	0.09
351	SLU 13	-139	37	4204	-28.46	-0.51	0.09
351	SLU 14	-145	38	4292	-29.36	-0.63	0.09
351	SLU 15	-145	38	4292	-29.36	-0.63	0.09
351	SLU 16	-145	38	4261	-29.04	-0.67	0.09
351	SLU 17	-145	38	4262	-29.04	-0.66	0.09
351	SLU 18	-142	38	4358	-29.39	-0.46	0.09
351	SLU 19	-142	38	4358	-29.4	-0.45	0.09
351	SLU 20	-148	39	4416	-29.98	-0.61	0.09
351	SLU 21	-148	39	4417	-29.98	-0.6	0.09
351	SLU 22	-132	36	4103	-27.85	-0.34	0.09
351	SLU 23	-131	36	4104	-27.86	-0.32	0.09
351	SLU 24	-138	37	4192	-28.75	-0.45	0.09
351	SLU 25	-138	37	4192	-28.76	-0.44	0.09
351	SLU 26	-137	37	4162	-28.44	-0.47	0.09
351	SLU 27	-144	38	4250	-29.33	-0.6	0.09
351	SLU 28	-144	38	4251	-29.34	-0.6	0.09
351	SLU 29	-144	38	4220	-29.02	-0.64	0.09
351	SLU 30	-143	38	4220	-29.02	-0.63	0.09
351	SLU 31	-153	41	4601	-31.41	-0.54	0.1
351	SLU 32	-160	42	4689	-32.3	-0.66	0.1
351	SLU 33	-159	42	4690	-32.31	-0.66	0.1
351	SLU 34	-159	41	4659	-32	-0.69	0.1
351	SLU 35	-166	43	4748	-32.89	-0.82	0.1
351	SLU 36	-165	43	4748	-32.9	-0.81	0.1
351	SLU 37	-165	42	4717	-32.57	-0.85	0.1
351	SLU 38	-165	42	4717	-32.58	-0.84	0.1
351	SLU 39	-162	43	4813	-32.92	-0.64	0.1
351	SLU 40	-162	43	4814	-32.93	-0.63	0.1
351	SLU 41	-168	43	4872	-33.51	-0.79	0.1
351	SLU 42	-168	43	4872	-33.52	-0.78	0.1
351	SLU 43	-138	39	4585	-30.4	-0.14	0.09
351	SLU 44	-138	39	4586	-30.41	-0.13	0.09
351	SLU 45	-144	40	4674	-31.3	-0.26	0.1
351	SLU 46	-144	40	4675	-31.31	-0.25	0.1
351	SLU 47	-144	40	4645	-30.99	-0.28	0.1
351	SLU 48	-150	41	4733	-31.88	-0.41	0.1
351	SLU 49	-150	41	4733	-31.89	-0.4	0.1
351	SLU 50	-150	41	4702	-31.57	-0.44	0.1
351	SLU 51	-150	41	4703	-31.57	-0.44	0.1
351	SLU 52	-159	44	5084	-33.96	-0.34	0.11
351	SLU 53	-166	45	5172	-34.85	-0.47	0.11
351	SLU 54	-166	45	5172	-34.86	-0.46	0.11
351	SLU 55	-165	45	5142	-34.55	-0.49	0.11
351	SLU 56	-172	46	5230	-35.44	-0.62	0.11
351	SLU 57	-172	46	5231	-35.44	-0.61	0.11
351	SLU 58	-171	45	5199	-35.12	-0.66	0.11
351	SLU 59	-171	45	5200	-35.13	-0.65	0.11
351	SLU 60	-168	46	5296	-35.47	-0.44	0.11
351	SLU 61	-168	46	5296	-35.48	-0.44	0.11
351	SLU 62	-174	47	5354	-36.06	-0.59	0.11
351	SLU 63	-174	47	5355	-36.07	-0.59	0.11
351	SLU 64	-158	44	5041	-33.93	-0.32	0.11
351	SLU 65	-158	44	5042	-33.94	-0.31	0.11
351	SLU 66	-165	45	5130	-34.83	-0.44	0.11

Nodo	Cont.	Reazione a traslazione			Reazione a rotazione		
Ind.	N.br.	x	y	z	x	y	z
351	SLU 67	-164	45	5130	-34.84	-0.43	0.11
351	SLU 68	-164	45	5100	-34.53	-0.46	0.11
351	SLU 69	-171	46	5188	-35.42	-0.59	0.11
351	SLU 70	-170	46	5189	-35.42	-0.58	0.11
351	SLU 71	-170	45	5158	-35.1	-0.62	0.11
351	SLU 72	-170	45	5158	-35.11	-0.62	0.11
351	SLU 73	-179	48	5539	-37.49	-0.52	0.12
351	SLU 74	-186	50	5627	-38.39	-0.65	0.12
351	SLU 75	-186	50	5628	-38.39	-0.64	0.12
351	SLU 76	-185	49	5597	-38.08	-0.67	0.12
351	SLU 77	-192	50	5686	-38.97	-0.8	0.12
351	SLU 78	-192	50	5686	-38.98	-0.79	0.12
351	SLU 79	-192	50	5655	-38.65	-0.84	0.12
351	SLU 80	-191	50	5655	-38.66	-0.83	0.12
351	SLU 81	-189	50	5751	-39.01	-0.62	0.12
351	SLU 82	-189	50	5752	-39.01	-0.62	0.12
351	SLU 83	-195	51	5810	-39.59	-0.78	0.12
351	SLU 84	-195	51	5810	-39.6	-0.77	0.12
351	SLE RA 1	-117	33	3778	-25.32	-0.21	0.08
351	SLE RA 2	-117	33	3778	-25.33	-0.2	0.08
351	SLE RA 3	-121	34	3837	-25.92	-0.28	0.08
351	SLE RA 4	-121	34	3837	-25.93	-0.28	0.08
351	SLE RA 5	-121	33	3817	-25.72	-0.3	0.08
351	SLE RA 6	-125	34	3876	-26.32	-0.39	0.08
351	SLE RA 7	-125	34	3876	-26.32	-0.38	0.08
351	SLE RA 8	-125	34	3855	-26.1	-0.41	0.08
351	SLE RA 9	-125	34	3856	-26.11	-0.4	0.08
351	SLE RA 10	-131	36	4110	-27.7	-0.34	0.09
351	SLE RA 11	-136	37	4168	-28.29	-0.43	0.09
351	SLE RA 12	-136	37	4169	-28.3	-0.42	0.09
351	SLE RA 13	-135	36	4149	-28.09	-0.44	0.09
351	SLE RA 14	-140	37	4207	-28.68	-0.53	0.09
351	SLE RA 15	-140	37	4208	-28.69	-0.52	0.09
351	SLE RA 16	-139	37	4187	-28.47	-0.55	0.09
351	SLE RA 17	-139	37	4187	-28.48	-0.55	0.09
351	SLE RA 18	-138	37	4251	-28.71	-0.41	0.09
351	SLE RA 19	-137	37	4251	-28.71	-0.4	0.09
351	SLE RA 20	-142	38	4290	-29.1	-0.51	0.09
351	SLE RA 21	-141	38	4290	-29.1	-0.51	0.09
351	SLE FR 1	-117	33	3778	-25.32	-0.21	0.08
351	SLE FR 2	-117	33	3778	-25.32	-0.21	0.08
351	SLE FR 3	-119	33	3793	-25.48	-0.25	0.08
351	SLE FR 4	-123	34	3920	-26.34	-0.27	0.08
351	SLE FR 5	-125	34	3935	-26.49	-0.31	0.08
351	SLE FR 6	-127	35	4014	-27.02	-0.31	0.08
351	SLE QP 1	-117	33	3778	-25.32	-0.21	0.08
351	SLE QP 2	-123	34	3920	-26.34	-0.27	0.08
351	SLD 1	553	35	3589	-24.39	30.86	0.07
351	SLD 2	553	35	3589	-24.39	30.86	0.07
351	SLD 3	464	48	4043	-38.76	27.29	0.12
351	SLD 4	464	48	4043	-38.76	27.29	0.12
351	SLD 5	214	15	3131	-3.97	14.47	0.01
351	SLD 6	214	15	3131	-3.97	14.47	0.01
351	SLD 7	-81	58	4646	-51.85	2.6	0.16
351	SLD 8	-81	58	4646	-51.85	2.6	0.16
351	SLD 9	-165	11	3194	-0.82	-3.13	0
351	SLD 10	-165	11	3194	-0.82	-3.13	0
351	SLD 11	-460	53	4708	-48.71	-15.01	0.15
351	SLD 12	-460	53	4708	-48.71	-15.01	0.15
351	SLD 13	-711	20	3796	-13.92	-27.83	0.05
351	SLD 14	-711	20	3796	-13.92	-27.83	0.05
351	SLD 15	-799	33	4250	-28.29	-31.39	0.09
351	SLD 16	-799	33	4250	-28.29	-31.39	0.09
351	SLV 1	1453	37	3134	-21.75	72.31	0.06
351	SLV 2	1453	37	3134	-21.75	72.31	0.06
351	SLV 3	1244	67	4219	-55.43	63.9	0.16
351	SLV 4	1244	67	4219	-55.43	63.9	0.16
351	SLV 5	667	-10	2038	26.12	34.26	-0.08
351	SLV 6	667	-10	2038	26.12	34.26	-0.08
351	SLV 7	-30	89	5655	-86.15	6.23	0.26
351	SLV 8	-30	89	5655	-86.15	6.23	0.26
351	SLV 9	-216	-21	2184	33.47	-6.77	-0.1
351	SLV 10	-216	-21	2184	33.47	-6.77	-0.1
351	SLV 11	-913	78	5801	-78.8	-34.79	0.24
351	SLV 12	-913	78	5801	-78.8	-34.79	0.24
351	SLV 13	-1491	1	3620	2.75	-64.44	0
351	SLV 14	-1491	1	3620	2.75	-64.44	0
351	SLV 15	-1700	31	4706	-30.93	-72.84	0.1
351	SLV 16	-1700	31	4706	-30.93	-72.84	0.1
352	SLU 1	-120	34	3421	-27.52	-7.09	0.06
352	SLU 2	-120	34	3422	-27.53	-7.08	0.06
352	SLU 3	-127	36	3502	-28.54	-7.48	0.06
352	SLU 4	-127	36	3502	-28.54	-7.47	0.06
352	SLU 5	-127	35	3475	-28.19	-7.42	0.06
352	SLU 6	-134	37	3554	-29.2	-7.83	0.06
352	SLU 7	-134	37	3555	-29.21	-7.82	0.06
352	SLU 8	-134	36	3526	-28.84	-7.79	0.06
352	SLU 9	-134	36	3527	-28.84	-7.78	0.06
352	SLU 10	-143	39	3883	-31.52	-8.37	0.07
352	SLU 11	-150	41	3963	-32.53	-8.78	0.07

Nodo	Cont.	Reazione a traslazione			Reazione a rotazione		
Ind.	N.br.	x	y	z	x	y	z
352	SLU 12	-150	41	3963	-32.54	-8.77	0.07
352	SLU 13	-150	40	3936	-32.18	-8.72	0.07
352	SLU 14	-157	42	4015	-33.19	-9.13	0.07
352	SLU 15	-157	42	4016	-33.2	-9.12	0.07
352	SLU 16	-157	41	3987	-32.83	-9.08	0.07
352	SLU 17	-157	41	3988	-32.84	-9.07	0.07
352	SLU 18	-153	42	4080	-33.22	-8.94	0.07
352	SLU 19	-153	42	4080	-33.23	-8.93	0.07
352	SLU 20	-160	42	4132	-33.88	-9.29	0.07
352	SLU 21	-160	42	4133	-33.89	-9.28	0.07
352	SLU 22	-142	39	3842	-31.49	-8.33	0.07
352	SLU 23	-142	39	3843	-31.51	-8.31	0.07
352	SLU 24	-149	41	3923	-32.51	-8.72	0.07
352	SLU 25	-149	41	3924	-32.52	-8.71	0.07
352	SLU 26	-148	40	3896	-32.17	-8.66	0.07
352	SLU 27	-156	42	3975	-33.17	-9.07	0.07
352	SLU 28	-156	42	3976	-33.18	-9.06	0.07
352	SLU 29	-156	41	3947	-32.81	-9.02	0.07
352	SLU 30	-155	41	3948	-32.82	-9.02	0.07
352	SLU 31	-165	44	4304	-35.5	-9.61	0.08
352	SLU 32	-172	46	4384	-36.51	-10.02	0.08
352	SLU 33	-172	46	4385	-36.51	-10.01	0.08
352	SLU 34	-171	45	4357	-36.16	-9.96	0.08
352	SLU 35	-179	47	4436	-37.17	-10.36	0.08
352	SLU 36	-179	47	4437	-37.17	-10.36	0.08
352	SLU 37	-179	46	4408	-36.81	-10.32	0.08
352	SLU 38	-178	46	4409	-36.81	-10.31	0.08
352	SLU 39	-175	47	4501	-37.2	-10.18	0.08
352	SLU 40	-175	47	4501	-37.21	-10.17	0.08
352	SLU 41	-182	47	4553	-37.86	-10.53	0.08
352	SLU 42	-181	47	4554	-37.87	-10.52	0.08
352	SLU 43	-149	43	4303	-34.41	-8.79	0.07
352	SLU 44	-148	43	4304	-34.42	-8.78	0.07
352	SLU 45	-156	44	4384	-35.43	-9.18	0.08
352	SLU 46	-156	44	4384	-35.44	-9.18	0.08
352	SLU 47	-155	44	4357	-35.08	-9.13	0.07
352	SLU 48	-163	45	4436	-36.09	-9.53	0.08
352	SLU 49	-163	45	4437	-36.1	-9.52	0.08
352	SLU 50	-162	45	4408	-35.73	-9.49	0.08
352	SLU 51	-162	45	4409	-35.74	-9.48	0.08
352	SLU 52	-171	48	4765	-38.41	-10.08	0.08
352	SLU 53	-179	49	4845	-39.42	-10.48	0.08
352	SLU 54	-179	49	4845	-39.43	-10.47	0.08
352	SLU 55	-178	49	4818	-39.07	-10.42	0.08
352	SLU 56	-186	50	4897	-40.08	-10.83	0.09
352	SLU 57	-186	50	4898	-40.09	-10.82	0.09
352	SLU 58	-185	50	4869	-39.72	-10.78	0.08
352	SLU 59	-185	50	4870	-39.73	-10.78	0.08
352	SLU 60	-181	50	4962	-40.11	-10.64	0.09
352	SLU 61	-181	50	4962	-40.12	-10.64	0.09
352	SLU 62	-188	51	5014	-40.77	-10.99	0.09
352	SLU 63	-188	51	5015	-40.78	-10.98	0.09
352	SLU 64	-170	48	4724	-38.39	-10.03	0.08
352	SLU 65	-170	48	4725	-38.4	-10.02	0.08
352	SLU 66	-178	49	4805	-39.41	-10.42	0.08
352	SLU 67	-178	49	4806	-39.41	-10.41	0.08
352	SLU 68	-177	49	4778	-39.06	-10.36	0.08
352	SLU 69	-185	50	4857	-40.07	-10.77	0.09
352	SLU 70	-184	50	4858	-40.07	-10.76	0.09
352	SLU 71	-184	50	4829	-39.71	-10.73	0.08
352	SLU 72	-184	50	4830	-39.71	-10.72	0.08
352	SLU 73	-193	53	5186	-42.39	-11.31	0.09
352	SLU 74	-201	54	5266	-43.4	-11.72	0.09
352	SLU 75	-201	54	5267	-43.41	-11.71	0.09
352	SLU 76	-200	54	5239	-43.05	-11.66	0.09
352	SLU 77	-208	55	5318	-44.06	-12.07	0.09
352	SLU 78	-207	55	5319	-44.07	-12.06	0.09
352	SLU 79	-207	55	5290	-43.7	-12.02	0.09
352	SLU 80	-207	55	5291	-43.71	-12.01	0.09
352	SLU 81	-203	55	5383	-44.09	-11.88	0.09
352	SLU 82	-203	55	5383	-44.1	-11.87	0.09
352	SLU 83	-210	56	5435	-44.75	-12.23	0.1
352	SLU 84	-210	56	5436	-44.76	-12.22	0.1
352	SLE RA 1	-126	36	3542	-28.65	-7.44	0.06
352	SLE RA 2	-126	36	3542	-28.66	-7.43	0.06
352	SLE RA 3	-131	37	3595	-29.33	-7.7	0.06
352	SLE RA 4	-131	37	3596	-29.34	-7.7	0.06
352	SLE RA 5	-131	36	3577	-29.1	-7.67	0.06
352	SLE RA 6	-136	37	3630	-29.77	-7.94	0.06
352	SLE RA 7	-136	37	3631	-29.78	-7.93	0.06
352	SLE RA 8	-135	37	3611	-29.53	-7.91	0.06
352	SLE RA 9	-135	37	3612	-29.54	-7.9	0.06
352	SLE RA 10	-141	39	3850	-31.32	-8.3	0.07
352	SLE RA 11	-147	40	3903	-31.99	-8.57	0.07
352	SLE RA 12	-146	40	3903	-32	-8.56	0.07
352	SLE RA 13	-146	40	3884	-31.76	-8.53	0.07
352	SLE RA 14	-151	41	3938	-32.43	-8.8	0.07
352	SLE RA 15	-151	41	3938	-32.44	-8.8	0.07
352	SLE RA 16	-151	40	3919	-32.19	-8.77	0.07
352	SLE RA 17	-151	40	3919	-32.2	-8.77	0.07

Nodo	Cont.	Reazione a traslazione			Reazione a rotazione		
Ind.	N.br.	x	y	z	x	y	z
352	SLE RA 18	-148	41	3981	-32.46	-8.68	0.07
352	SLE RA 19	-148	41	3981	-32.46	-8.67	0.07
352	SLE RA 20	-153	41	4016	-32.9	-8.91	0.07
352	SLE RA 21	-153	41	4016	-32.9	-8.9	0.07
352	SLE FR 1	-126	36	3542	-28.65	-7.44	0.06
352	SLE FR 2	-126	36	3542	-28.65	-7.44	0.06
352	SLE FR 3	-128	36	3556	-28.83	-7.54	0.06
352	SLE FR 4	-133	37	3673	-29.8	-7.81	0.06
352	SLE FR 5	-135	38	3687	-29.97	-7.91	0.06
352	SLE FR 6	-137	38	3761	-30.55	-8.06	0.06
352	SLE QP 1	-126	36	3542	-28.65	-7.44	0.06
352	SLE QP 2	-133	37	3673	-29.79	-7.81	0.06
352	SLD 1	560	34	3395	-24.79	23.09	0.05
352	SLD 2	560	34	3395	-24.79	23.09	0.05
352	SLD 3	490	52	3805	-43.38	20.14	0.09
352	SLD 4	490	52	3805	-43.38	20.14	0.09
352	SLD 5	181	8	2968	-0.09	5.92	0
352	SLD 6	181	8	2968	-0.09	5.92	0
352	SLD 7	-52	70	4334	-62.07	-3.89	0.13
352	SLD 8	-52	70	4334	-62.07	-3.89	0.13
352	SLD 9	-214	5	3012	2.48	-11.74	0
352	SLD 10	-214	5	3012	2.48	-11.74	0
352	SLD 11	-447	66	4378	-59.49	-21.55	0.12
352	SLD 12	-447	66	4378	-59.49	-21.55	0.12
352	SLD 13	-755	22	3541	-16.21	-35.77	0.04
352	SLD 14	-755	22	3541	-16.21	-35.77	0.04
352	SLD 15	-825	41	3951	-34.8	-38.71	0.08
352	SLD 16	-825	41	3951	-34.8	-38.71	0.08
352	SLV 1	1482	29	3013	-18.05	64.24	0.03
352	SLV 2	1482	29	3013	-18.05	64.24	0.03
352	SLV 3	1316	73	3990	-61.63	57.27	0.12
352	SLV 4	1316	73	3990	-61.63	57.27	0.12
352	SLV 5	602	-31	1993	39.83	24.39	-0.08
352	SLV 6	602	-31	1993	39.83	24.39	-0.08
352	SLV 7	51	114	5251	-105.44	1.13	0.22
352	SLV 8	51	114	5251	-105.44	1.13	0.22
352	SLV 9	-317	-39	2096	45.86	-16.75	-0.09
352	SLV 10	-317	-39	2096	45.86	-16.75	-0.09
352	SLV 11	-868	105	5354	-99.42	-40.01	0.21
352	SLV 12	-868	105	5354	-99.42	-40.01	0.21
352	SLV 13	-1582	2	3356	2.04	-72.89	0
352	SLV 14	-1582	2	3356	2.04	-72.89	0
352	SLV 15	-1747	45	4333	-41.54	-79.87	0.09
352	SLV 16	-1747	45	4333	-41.54	-79.87	0.09
353	SLU 1	42	34	3279	-28.43	4.26	0.03
353	SLU 2	42	34	3281	-28.44	4.28	0.03
353	SLU 3	39	35	3354	-29.48	4.25	0.03
353	SLU 4	40	35	3355	-29.49	4.26	0.03
353	SLU 5	38	35	3329	-29.12	4.17	0.03
353	SLU 6	36	36	3402	-30.16	4.14	0.03
353	SLU 7	36	36	3403	-30.17	4.15	0.03
353	SLU 8	34	36	3375	-29.78	4.05	0.03
353	SLU 9	35	36	3376	-29.79	4.06	0.03
353	SLU 10	45	39	3719	-32.55	4.78	0.03
353	SLU 11	42	40	3792	-33.59	4.75	0.03
353	SLU 12	42	40	3793	-33.6	4.76	0.03
353	SLU 13	41	40	3767	-33.23	4.67	0.03
353	SLU 14	38	41	3840	-34.27	4.64	0.03
353	SLU 15	38	41	3841	-34.27	4.65	0.03
353	SLU 16	37	41	3813	-33.89	4.55	0.03
353	SLU 17	37	41	3814	-33.9	4.56	0.03
353	SLU 18	45	41	3905	-34.3	4.98	0.03
353	SLU 19	45	41	3906	-34.31	4.99	0.03
353	SLU 20	41	42	3953	-34.98	4.87	0.03
353	SLU 21	42	42	3954	-34.98	4.88	0.03
353	SLU 22	44	39	3678	-32.53	4.73	0.03
353	SLU 23	44	39	3680	-32.54	4.75	0.03
353	SLU 24	42	40	3753	-33.58	4.72	0.03
353	SLU 25	42	40	3754	-33.59	4.73	0.03
353	SLU 26	41	40	3728	-33.22	4.65	0.03
353	SLU 27	38	41	3801	-34.26	4.61	0.03
353	SLU 28	38	41	3802	-34.26	4.62	0.03
353	SLU 29	37	41	3775	-33.88	4.53	0.03
353	SLU 30	37	41	3775	-33.89	4.54	0.03
353	SLU 31	47	44	4118	-36.65	5.25	0.03
353	SLU 32	44	45	4191	-37.69	5.22	0.04
353	SLU 33	44	45	4192	-37.69	5.23	0.04
353	SLU 34	43	45	4166	-37.33	5.15	0.03
353	SLU 35	40	46	4239	-38.36	5.11	0.04
353	SLU 36	41	46	4240	-38.37	5.12	0.04
353	SLU 37	39	46	4213	-37.99	5.03	0.04
353	SLU 38	39	46	4213	-38	5.04	0.04
353	SLU 39	47	46	4304	-38.39	5.45	0.04
353	SLU 40	48	46	4305	-38.4	5.46	0.04
353	SLU 41	44	47	4352	-39.07	5.34	0.04
353	SLU 42	44	47	4353	-39.08	5.35	0.04
353	SLU 43	54	43	4126	-35.55	5.38	0.03
353	SLU 44	54	43	4128	-35.57	5.4	0.03
353	SLU 45	51	44	4201	-36.61	5.36	0.03
353	SLU 46	52	44	4202	-36.61	5.37	0.03

Nodo	Cont.	Reazione a traslazione			Reazione a rotazione		
Ind.	N.br.	x	y	z	x	y	z
353	SLU 47	50	44	4176	-36.25	5.29	0.03
353	SLU 48	48	45	4249	-37.28	5.26	0.03
353	SLU 49	48	45	4250	-37.29	5.27	0.03
353	SLU 50	46	44	4222	-36.91	5.17	0.03
353	SLU 51	46	44	4223	-36.92	5.18	0.03
353	SLU 52	56	48	4566	-39.68	5.89	0.04
353	SLU 53	54	49	4639	-40.71	5.86	0.04
353	SLU 54	54	49	4640	-40.72	5.87	0.04
353	SLU 55	53	48	4614	-40.35	5.79	0.04
353	SLU 56	50	50	4687	-41.39	5.76	0.04
353	SLU 57	50	50	4688	-41.4	5.77	0.04
353	SLU 58	49	49	4660	-41.02	5.67	0.04
353	SLU 59	49	49	4661	-41.03	5.68	0.04
353	SLU 60	57	50	4752	-41.42	6.09	0.04
353	SLU 61	57	50	4753	-41.43	6.1	0.04
353	SLU 62	53	51	4800	-42.1	5.99	0.04
353	SLU 63	54	51	4801	-42.11	6	0.04
353	SLU 64	56	48	4525	-39.65	5.85	0.04
353	SLU 65	56	48	4527	-39.67	5.87	0.04
353	SLU 66	53	49	4600	-40.7	5.84	0.04
353	SLU 67	54	49	4601	-40.71	5.85	0.04
353	SLU 68	52	48	4575	-40.34	5.76	0.04
353	SLU 69	50	50	4648	-41.38	5.73	0.04
353	SLU 70	50	50	4649	-41.39	5.74	0.04
353	SLU 71	48	49	4622	-41.01	5.64	0.04
353	SLU 72	49	49	4622	-41.02	5.65	0.04
353	SLU 73	59	53	4965	-43.77	6.37	0.04
353	SLU 74	56	54	5038	-44.81	6.34	0.04
353	SLU 75	56	54	5039	-44.82	6.34	0.04
353	SLU 76	55	53	5013	-44.45	6.26	0.04
353	SLU 77	52	55	5086	-45.49	6.23	0.04
353	SLU 78	52	55	5087	-45.5	6.24	0.04
353	SLU 79	51	54	5060	-45.11	6.14	0.04
353	SLU 80	51	54	5060	-45.12	6.15	0.04
353	SLU 81	59	55	5151	-45.52	6.56	0.04
353	SLU 82	59	55	5152	-45.53	6.57	0.04
353	SLU 83	55	55	5199	-46.2	6.46	0.04
353	SLU 84	56	55	5200	-46.21	6.47	0.04
353	SLE RA 1	42	36	3393	-29.6	4.4	0.03
353	SLE RA 2	43	36	3394	-29.61	4.41	0.03
353	SLE RA 3	41	36	3443	-30.3	4.39	0.03
353	SLE RA 4	41	36	3444	-30.31	4.39	0.03
353	SLE RA 5	40	36	3426	-30.06	4.34	0.03
353	SLE RA 6	38	37	3475	-30.75	4.32	0.03
353	SLE RA 7	39	37	3476	-30.76	4.32	0.03
353	SLE RA 8	37	37	3457	-30.5	4.26	0.03
353	SLE RA 9	38	37	3458	-30.51	4.27	0.03
353	SLE RA 10	44	39	3686	-32.35	4.74	0.03
353	SLE RA 11	42	40	3735	-33.04	4.72	0.03
353	SLE RA 12	43	40	3736	-33.05	4.73	0.03
353	SLE RA 13	42	39	3718	-32.8	4.67	0.03
353	SLE RA 14	40	40	3767	-33.49	4.65	0.03
353	SLE RA 15	40	40	3768	-33.5	4.66	0.03
353	SLE RA 16	39	40	3749	-33.24	4.59	0.03
353	SLE RA 17	39	40	3750	-33.25	4.6	0.03
353	SLE RA 18	45	40	3811	-33.51	4.87	0.03
353	SLE RA 19	45	40	3811	-33.52	4.88	0.03
353	SLE RA 20	42	41	3843	-33.96	4.8	0.03
353	SLE RA 21	42	41	3843	-33.97	4.81	0.03
353	SLE FR 1	42	36	3393	-29.6	4.4	0.03
353	SLE FR 2	43	36	3394	-29.6	4.4	0.03
353	SLE FR 3	41	36	3406	-29.78	4.37	0.03
353	SLE FR 4	43	37	3519	-30.78	4.54	0.03
353	SLE FR 5	42	37	3531	-30.95	4.51	0.03
353	SLE FR 6	44	38	3602	-31.56	4.63	0.03
353	SLE QP 1	42	36	3393	-29.6	4.4	0.03
353	SLE QP 2	43	37	3519	-30.77	4.54	0.03
353	SLD 1	702	30	3290	-23.22	34.01	0.02
353	SLD 2	702	30	3290	-23.22	34.01	0.02
353	SLD 3	752	51	3681	-44.21	36.34	0.04
353	SLD 4	752	51	3681	-44.21	36.34	0.04
353	SLD 5	165	2	2857	3.33	9.85	0
353	SLD 6	165	2	2857	3.33	9.85	0
353	SLD 7	332	74	4160	-66.64	17.61	0.06
353	SLD 8	332	74	4160	-66.64	17.61	0.06
353	SLD 9	-246	0	2877	5.09	-8.53	0
353	SLD 10	-246	0	2877	5.09	-8.53	0
353	SLD 11	-78	72	4180	-64.88	-0.77	0.06
353	SLD 12	-78	72	4180	-64.88	-0.77	0.06
353	SLD 13	-666	23	3357	-17.34	-27.26	0.02
353	SLD 14	-666	23	3357	-17.34	-27.26	0.02
353	SLD 15	-615	44	3747	-38.33	-24.93	0.04
353	SLD 16	-615	44	3747	-38.33	-24.93	0.04
353	SLV 1	1577	20	2975	-13.07	73.17	0
353	SLV 2	1577	20	2975	-13.07	73.17	0
353	SLV 3	1696	70	3905	-62.27	78.67	0.05
353	SLV 4	1696	70	3905	-62.27	78.67	0.05
353	SLV 5	323	-45	1945	49.16	16.79	-0.05
353	SLV 6	323	-45	1945	49.16	16.79	-0.05
353	SLV 7	719	124	5045	-114.84	35.12	0.1

Nodo	Cont.	Reazione a traslazione			Reazione a rotazione		
Ind.	N.br.	x	y	z	x	y	z
353	SLV 8	719	124	5045	-114.84	35.12	0.1
353	SLV 9	-633	-50	1992	53.29	-26.04	-0.04
353	SLV 10	-633	-50	1992	53.29	-26.04	-0.04
353	SLV 11	-237	119	5093	-110.7	-7.71	0.1
353	SLV 12	-237	119	5093	-110.7	-7.71	0.1
353	SLV 13	-1609	3	3132	0.72	-69.59	0.01
353	SLV 14	-1609	3	3132	0.72	-69.59	0.01
353	SLV 15	-1491	54	4063	-48.48	-64.09	0.05
353	SLV 16	-1491	54	4063	-48.48	-64.09	0.05
354	SLU 1	161	33	3313	-27.71	5.42	-0.01
354	SLU 2	162	33	3314	-27.72	5.44	-0.01
354	SLU 3	163	34	3388	-28.73	5.42	-0.01
354	SLU 4	163	34	3389	-28.74	5.43	-0.01
354	SLU 5	160	34	3362	-28.38	5.33	-0.01
354	SLU 6	161	35	3435	-29.38	5.31	-0.01
354	SLU 7	161	35	3436	-29.39	5.33	-0.01
354	SLU 8	158	35	3407	-29.02	5.21	-0.01
354	SLU 9	158	35	3408	-29.03	5.22	-0.01
354	SLU 10	183	38	3757	-31.72	6.07	-0.01
354	SLU 11	183	39	3830	-32.73	6.04	-0.01
354	SLU 12	184	39	3831	-32.73	6.06	-0.01
354	SLU 13	181	39	3804	-32.38	5.96	-0.01
354	SLU 14	182	40	3877	-33.38	5.94	-0.02
354	SLU 15	182	40	3878	-33.39	5.95	-0.02
354	SLU 16	179	39	3850	-33.02	5.83	-0.02
354	SLU 17	179	39	3851	-33.02	5.84	-0.02
354	SLU 18	191	40	3945	-33.42	6.31	-0.02
354	SLU 19	191	40	3946	-33.43	6.33	-0.02
354	SLU 20	189	41	3992	-34.07	6.2	-0.02
354	SLU 21	190	41	3993	-34.08	6.22	-0.02
354	SLU 22	181	38	3716	-31.69	6.02	-0.01
354	SLU 23	182	38	3718	-31.71	6.04	-0.01
354	SLU 24	182	39	3791	-32.72	6.02	-0.01
354	SLU 25	183	39	3792	-32.72	6.03	-0.01
354	SLU 26	180	39	3765	-32.37	5.93	-0.01
354	SLU 27	181	40	3838	-33.37	5.91	-0.02
354	SLU 28	181	40	3839	-33.38	5.92	-0.02
354	SLU 29	178	39	3811	-33.01	5.8	-0.02
354	SLU 30	178	39	3811	-33.01	5.81	-0.02
354	SLU 31	202	42	4160	-35.71	6.66	-0.02
354	SLU 32	203	44	4233	-36.71	6.64	-0.02
354	SLU 33	203	44	4234	-36.72	6.65	-0.02
354	SLU 34	201	43	4207	-36.36	6.55	-0.02
354	SLU 35	201	44	4281	-37.37	6.53	-0.02
354	SLU 36	202	44	4281	-37.38	6.54	-0.02
354	SLU 37	199	44	4253	-37	6.42	-0.02
354	SLU 38	199	44	4254	-37.01	6.44	-0.02
354	SLU 39	211	45	4348	-37.41	6.91	-0.02
354	SLU 40	211	45	4349	-37.42	6.92	-0.02
354	SLU 41	209	45	4396	-38.06	6.8	-0.02
354	SLU 42	209	45	4396	-38.07	6.81	-0.02
354	SLU 43	203	41	4169	-34.65	6.85	-0.02
354	SLU 44	204	41	4170	-34.67	6.87	-0.02
354	SLU 45	204	43	4243	-35.67	6.84	-0.02
354	SLU 46	205	43	4244	-35.68	6.86	-0.02
354	SLU 47	202	42	4217	-35.32	6.76	-0.02
354	SLU 48	203	43	4291	-36.33	6.74	-0.02
354	SLU 49	203	43	4291	-36.34	6.75	-0.02
354	SLU 50	200	43	4263	-35.96	6.63	-0.02
354	SLU 51	200	43	4264	-35.97	6.64	-0.02
354	SLU 52	224	46	4613	-38.67	7.49	-0.02
354	SLU 53	225	47	4686	-39.67	7.47	-0.02
354	SLU 54	225	47	4687	-39.68	7.48	-0.02
354	SLU 55	223	47	4660	-39.32	7.38	-0.02
354	SLU 56	223	48	4733	-40.33	7.36	-0.02
354	SLU 57	224	48	4734	-40.33	7.37	-0.02
354	SLU 58	221	48	4706	-39.96	7.25	-0.02
354	SLU 59	221	48	4706	-39.97	7.26	-0.02
354	SLU 60	233	48	4801	-40.36	7.74	-0.02
354	SLU 61	233	48	4802	-40.37	7.75	-0.02
354	SLU 62	231	49	4848	-41.02	7.63	-0.02
354	SLU 63	231	49	4849	-41.03	7.64	-0.02
354	SLU 64	223	46	4572	-38.64	7.44	-0.02
354	SLU 65	223	46	4573	-38.66	7.46	-0.02
354	SLU 66	224	47	4647	-39.66	7.44	-0.02
354	SLU 67	224	47	4647	-39.67	7.45	-0.02
354	SLU 68	222	47	4620	-39.31	7.35	-0.02
354	SLU 69	222	48	4694	-40.32	7.33	-0.02
354	SLU 70	223	48	4695	-40.32	7.34	-0.02
354	SLU 71	219	48	4666	-39.95	7.22	-0.02
354	SLU 72	220	48	4667	-39.96	7.24	-0.02
354	SLU 73	244	51	5016	-42.65	8.08	-0.02
354	SLU 74	245	52	5089	-43.66	8.06	-0.02
354	SLU 75	245	52	5090	-43.67	8.07	-0.02
354	SLU 76	242	52	5063	-43.31	7.98	-0.02
354	SLU 77	243	53	5136	-44.31	7.95	-0.02
354	SLU 78	243	53	5137	-44.32	7.97	-0.02
354	SLU 79	240	52	5109	-43.95	7.85	-0.02
354	SLU 80	241	52	5110	-43.96	7.86	-0.02
354	SLU 81	252	53	5204	-44.35	8.33	-0.02

Nodo	Cont.	Reazione a traslazione			Reazione a rotazione		
Ind.	N.br.	x	y	z	x	y	z
354	SLU 82	253	53	5205	-44.36	8.34	-0.02
354	SLU 83	251	54	5251	-45.01	8.22	-0.02
354	SLU 84	251	54	5252	-45.02	8.24	-0.02
354	SLE RA 1	167	34	3428	-28.85	5.59	-0.01
354	SLE RA 2	167	34	3429	-28.86	5.61	-0.01
354	SLE RA 3	168	35	3478	-29.53	5.59	-0.01
354	SLE RA 4	168	35	3479	-29.53	5.6	-0.01
354	SLE RA 5	166	35	3461	-29.29	5.53	-0.01
354	SLE RA 6	167	36	3509	-29.96	5.52	-0.01
354	SLE RA 7	167	36	3510	-29.97	5.53	-0.01
354	SLE RA 8	165	35	3491	-29.72	5.45	-0.01
354	SLE RA 9	165	35	3492	-29.73	5.46	-0.01
354	SLE RA 10	181	38	3724	-31.52	6.02	-0.01
354	SLE RA 11	182	38	3773	-32.19	6.01	-0.01
354	SLE RA 12	182	38	3774	-32.2	6.02	-0.01
354	SLE RA 13	180	38	3756	-31.96	5.95	-0.01
354	SLE RA 14	181	39	3804	-32.63	5.94	-0.01
354	SLE RA 15	181	39	3805	-32.63	5.94	-0.01
354	SLE RA 16	179	39	3786	-32.39	5.86	-0.01
354	SLE RA 17	179	39	3787	-32.39	5.87	-0.01
354	SLE RA 18	187	39	3850	-32.65	6.19	-0.01
354	SLE RA 19	187	39	3850	-32.66	6.19	-0.01
354	SLE RA 20	186	39	3881	-33.09	6.11	-0.02
354	SLE RA 21	186	39	3882	-33.1	6.12	-0.02
354	SLE FR 1	167	34	3428	-28.85	5.59	-0.01
354	SLE FR 2	167	34	3428	-28.85	5.6	-0.01
354	SLE FR 3	167	35	3441	-29.02	5.56	-0.01
354	SLE FR 4	173	36	3555	-29.99	5.77	-0.01
354	SLE FR 5	173	36	3567	-30.16	5.74	-0.01
354	SLE FR 6	177	37	3639	-30.75	5.89	-0.01
354	SLE QP 1	167	34	3428	-28.85	5.59	-0.01
354	SLE QP 2	173	36	3555	-29.99	5.77	-0.01
354	SLD 1	829	23	3410	-21.34	35.24	-0.01
354	SLD 2	829	23	3410	-21.34	35.24	-0.01
354	SLD 3	885	45	3807	-42.54	37.54	-0.02
354	SLD 4	885	45	3807	-42.54	37.54	-0.02
354	SLD 5	285	-1	2908	4.76	11.12	0
354	SLD 6	285	-1	2908	4.76	11.12	0
354	SLD 7	471	72	4234	-65.91	18.79	-0.03
354	SLD 8	471	72	4234	-65.91	18.79	-0.03
354	SLD 9	-125	0	2876	5.93	-7.25	0
354	SLD 10	-125	0	2876	5.93	-7.25	0
354	SLD 11	61	73	4201	-64.74	0.42	-0.03
354	SLD 12	61	73	4201	-64.74	0.42	-0.03
354	SLD 13	-539	27	3302	-17.44	-26	-0.01
354	SLD 14	-539	27	3302	-17.44	-26	-0.01
354	SLD 15	-483	49	3699	-38.64	-23.7	-0.02
354	SLD 16	-483	49	3699	-38.64	-23.7	-0.02
354	SLV 1	1700	5	3208	-9.75	74.37	-0.01
354	SLV 2	1700	5	3208	-9.75	74.37	-0.01
354	SLV 3	1833	57	4154	-59.43	79.87	-0.03
354	SLV 4	1833	57	4154	-59.43	79.87	-0.03
354	SLV 5	429	-51	2016	51.43	18.02	0.02
354	SLV 6	429	-51	2016	51.43	18.02	0.02
354	SLV 7	872	120	5169	-114.17	36.33	-0.05
354	SLV 8	872	120	5169	-114.17	36.33	-0.05
354	SLV 9	-526	-49	1940	54.19	-24.79	0.02
354	SLV 10	-526	-49	1940	54.19	-24.79	0.02
354	SLV 11	-83	123	5093	-111.41	-6.48	-0.05
354	SLV 12	-83	123	5093	-111.41	-6.48	-0.05
354	SLV 13	-1487	15	2955	-0.55	-68.33	0
354	SLV 14	-1487	15	2955	-0.55	-68.33	0
354	SLV 15	-1354	66	3901	-50.23	-62.83	-0.02
354	SLV 16	-1354	66	3901	-50.23	-62.83	-0.02
355	SLU 1	302	31	3490	-25.45	12.67	-0.04
355	SLU 2	302	31	3491	-25.47	12.69	-0.04
355	SLU 3	307	32	3569	-26.39	12.9	-0.04
355	SLU 4	308	32	3570	-26.39	12.92	-0.04
355	SLU 5	303	32	3541	-26.06	12.74	-0.04
355	SLU 6	309	33	3618	-26.98	12.95	-0.04
355	SLU 7	309	33	3619	-26.99	12.96	-0.04
355	SLU 8	304	33	3588	-26.65	12.77	-0.04
355	SLU 9	305	33	3589	-26.66	12.78	-0.04
355	SLU 10	345	36	3961	-29.14	14.53	-0.05
355	SLU 11	351	37	4039	-30.06	14.74	-0.05
355	SLU 12	351	37	4040	-30.07	14.76	-0.05
355	SLU 13	347	36	4011	-29.74	14.58	-0.05
355	SLU 14	352	38	4088	-30.66	14.79	-0.05
355	SLU 15	352	38	4089	-30.67	14.8	-0.05
355	SLU 16	348	37	4058	-30.33	14.61	-0.05
355	SLU 17	348	37	4059	-30.33	14.62	-0.05
355	SLU 18	363	38	4161	-30.71	15.3	-0.05
355	SLU 19	364	38	4162	-30.72	15.31	-0.05
355	SLU 20	365	38	4210	-31.3	15.35	-0.05
355	SLU 21	365	38	4211	-31.31	15.36	-0.05
355	SLU 22	343	36	3918	-29.12	14.4	-0.05
355	SLU 23	343	36	3920	-29.13	14.42	-0.05
355	SLU 24	348	37	3998	-30.05	14.63	-0.05
355	SLU 25	349	37	3999	-30.06	14.64	-0.05
355	SLU 26	344	36	3970	-29.73	14.47	-0.05

Nodo	Cont.	Reazione a traslazione			Reazione a rotazione		
Ind.	N.br.	x	y	z	x	y	z
355	SLU 27	350	38	4047	-30.65	14.68	-0.05
355	SLU 28	350	38	4048	-30.66	14.69	-0.05
355	SLU 29	345	37	4017	-30.31	14.5	-0.05
355	SLU 30	345	37	4018	-30.32	14.51	-0.05
355	SLU 31	386	40	4390	-32.81	16.26	-0.05
355	SLU 32	392	41	4468	-33.73	16.47	-0.06
355	SLU 33	392	41	4469	-33.74	16.48	-0.06
355	SLU 34	388	41	4440	-33.41	16.31	-0.05
355	SLU 35	393	42	4517	-34.33	16.52	-0.06
355	SLU 36	393	42	4518	-34.33	16.53	-0.06
355	SLU 37	388	42	4487	-33.99	16.34	-0.06
355	SLU 38	389	42	4488	-34	16.35	-0.06
355	SLU 39	404	42	4590	-34.37	17.03	-0.06
355	SLU 40	405	42	4591	-34.38	17.04	-0.06
355	SLU 41	406	43	4639	-34.97	17.08	-0.06
355	SLU 42	406	43	4640	-34.98	17.09	-0.06
355	SLU 43	378	39	4389	-31.83	15.88	-0.05
355	SLU 44	379	39	4391	-31.85	15.9	-0.05
355	SLU 45	384	40	4469	-32.76	16.11	-0.05
355	SLU 46	384	40	4470	-32.77	16.13	-0.05
355	SLU 47	380	40	4441	-32.44	15.95	-0.05
355	SLU 48	385	41	4518	-33.36	16.16	-0.05
355	SLU 49	385	41	4519	-33.37	16.17	-0.05
355	SLU 50	381	40	4488	-33.03	15.98	-0.05
355	SLU 51	381	40	4489	-33.04	15.99	-0.05
355	SLU 52	422	44	4861	-35.52	17.74	-0.06
355	SLU 53	427	45	4939	-36.44	17.95	-0.06
355	SLU 54	427	45	4940	-36.45	17.97	-0.06
355	SLU 55	423	44	4911	-36.12	17.79	-0.06
355	SLU 56	428	45	4988	-37.04	18	-0.06
355	SLU 57	429	45	4989	-37.05	18.01	-0.06
355	SLU 58	424	45	4958	-36.7	17.82	-0.06
355	SLU 59	424	45	4959	-36.71	17.83	-0.06
355	SLU 60	440	45	5061	-37.09	18.51	-0.06
355	SLU 61	440	45	5062	-37.09	18.52	-0.06
355	SLU 62	441	46	5110	-37.68	18.56	-0.06
355	SLU 63	442	46	5111	-37.69	18.57	-0.06
355	SLU 64	419	43	4818	-35.5	17.61	-0.06
355	SLU 65	420	43	4820	-35.51	17.63	-0.06
355	SLU 66	425	45	4898	-36.43	17.84	-0.06
355	SLU 67	425	45	4899	-36.44	17.85	-0.06
355	SLU 68	421	44	4869	-36.11	17.68	-0.06
355	SLU 69	426	45	4947	-37.03	17.89	-0.06
355	SLU 70	426	45	4948	-37.04	17.9	-0.06
355	SLU 71	422	45	4917	-36.69	17.7	-0.06
355	SLU 72	422	45	4918	-36.7	17.72	-0.06
355	SLU 73	463	48	5290	-39.19	19.47	-0.06
355	SLU 74	468	49	5368	-40.11	19.68	-0.07
355	SLU 75	468	49	5369	-40.12	19.69	-0.07
355	SLU 76	464	49	5339	-39.79	19.52	-0.07
355	SLU 77	469	50	5417	-40.7	19.73	-0.07
355	SLU 78	470	50	5418	-40.71	19.74	-0.07
355	SLU 79	465	49	5387	-40.37	19.54	-0.07
355	SLU 80	465	49	5388	-40.38	19.56	-0.07
355	SLU 81	481	50	5490	-40.75	20.24	-0.07
355	SLU 82	481	50	5491	-40.76	20.25	-0.07
355	SLU 83	482	51	5539	-41.35	20.28	-0.07
355	SLU 84	482	51	5540	-41.36	20.3	-0.07
355	SLE RA 1	313	32	3612	-26.5	13.16	-0.04
355	SLE RA 2	314	32	3613	-26.51	13.18	-0.04
355	SLE RA 3	317	33	3665	-27.12	13.32	-0.04
355	SLE RA 4	317	33	3666	-27.13	13.33	-0.04
355	SLE RA 5	315	33	3646	-26.91	13.21	-0.04
355	SLE RA 6	318	34	3698	-27.52	13.35	-0.05
355	SLE RA 7	318	34	3699	-27.53	13.36	-0.05
355	SLE RA 8	315	33	3678	-27.3	13.23	-0.04
355	SLE RA 9	315	33	3679	-27.3	13.24	-0.04
355	SLE RA 10	343	35	3927	-28.96	14.41	-0.05
355	SLE RA 11	346	36	3978	-29.57	14.55	-0.05
355	SLE RA 12	346	36	3979	-29.58	14.55	-0.05
355	SLE RA 13	343	36	3960	-29.36	14.44	-0.05
355	SLE RA 14	347	37	4011	-29.97	14.58	-0.05
355	SLE RA 15	347	37	4012	-29.98	14.59	-0.05
355	SLE RA 16	344	36	3991	-29.75	14.46	-0.05
355	SLE RA 17	344	36	3992	-29.75	14.46	-0.05
355	SLE RA 18	355	37	4060	-30	14.92	-0.05
355	SLE RA 19	355	37	4060	-30.01	14.93	-0.05
355	SLE RA 20	355	37	4093	-30.4	14.95	-0.05
355	SLE RA 21	356	37	4093	-30.41	14.96	-0.05
355	SLE FR 1	313	32	3612	-26.5	13.16	-0.04
355	SLE FR 2	313	32	3612	-26.5	13.17	-0.04
355	SLE FR 3	314	33	3625	-26.66	13.18	-0.04
355	SLE FR 4	326	34	3747	-27.55	13.69	-0.05
355	SLE FR 5	326	34	3760	-27.71	13.7	-0.05
355	SLE FR 6	334	35	3836	-28.25	14.04	-0.05
355	SLE QP 1	313	32	3612	-26.5	13.16	-0.04
355	SLE QP 2	326	34	3746	-27.55	13.69	-0.05
355	SLD 1	941	21	3636	-15.62	41.35	-0.03
355	SLD 2	941	21	3636	-15.62	41.35	-0.03
355	SLD 3	1024	40	4059	-34.81	44.86	-0.06

Nodo	Cont.	Reazione a traslazione			Reazione a rotazione		
Ind.	N.br.	x	y	z	x	y	z
355	SLD 4	1024	40	4059	-34.81	44.86	-0.06
355	SLD 5	383	0	3071	5.14	16.66	0.01
355	SLD 6	383	0	3071	5.14	16.66	0.01
355	SLD 7	662	65	4482	-58.84	28.37	-0.1
355	SLD 8	662	65	4482	-58.84	28.37	-0.1
355	SLD 9	-11	3	3011	3.74	-0.99	0
355	SLD 10	-11	3	3011	3.74	-0.99	0
355	SLD 11	268	67	4422	-60.24	10.73	-0.1
355	SLD 12	268	67	4422	-60.24	10.73	-0.1
355	SLD 13	-373	27	3434	-20.29	-17.48	-0.03
355	SLD 14	-373	27	3434	-20.29	-17.48	-0.03
355	SLD 15	-289	47	3857	-39.48	-13.97	-0.06
355	SLD 16	-289	47	3857	-39.48	-13.97	-0.06
355	SLV 1	1756	3	3478	0.43	78.02	0
355	SLV 2	1756	3	3478	0.43	78.02	0
355	SLV 3	1956	48	4485	-44.54	86.42	-0.07
355	SLV 4	1956	48	4485	-44.54	86.42	-0.07
355	SLV 5	452	-44	2137	49.05	20.26	0.08
355	SLV 6	452	-44	2137	49.05	20.26	0.08
355	SLV 7	1117	107	5496	-100.85	48.24	-0.16
355	SLV 8	1117	107	5496	-100.85	48.24	-0.16
355	SLV 9	-466	-39	1996	45.75	-20.86	0.07
355	SLV 10	-466	-39	1996	45.75	-20.86	0.07
355	SLV 11	199	112	5355	-104.15	7.12	-0.17
355	SLV 12	199	112	5355	-104.15	7.12	-0.17
355	SLV 13	-1305	19	3007	-10.56	-59.04	-0.02
355	SLV 14	-1305	19	3007	-10.56	-59.04	-0.02
355	SLV 15	-1105	64	4015	-55.53	-50.64	-0.09
355	SLV 16	-1105	64	4015	-55.53	-50.64	-0.09
356	SLU 1	358	26	3796	-21.23	14.85	-0.06
356	SLU 2	358	26	3799	-21.24	14.88	-0.06
356	SLU 3	366	27	3885	-22	15.16	-0.06
356	SLU 4	366	27	3886	-22.01	15.18	-0.06
356	SLU 5	361	27	3853	-21.74	14.97	-0.06
356	SLU 6	368	28	3940	-22.5	15.25	-0.06
356	SLU 7	368	28	3941	-22.51	15.26	-0.06
356	SLU 8	363	28	3906	-22.22	15.03	-0.06
356	SLU 9	363	28	3907	-22.23	15.04	-0.06
356	SLU 10	410	30	4316	-24.32	16.95	-0.06
356	SLU 11	417	31	4403	-25.08	17.23	-0.07
356	SLU 12	417	31	4404	-25.09	17.25	-0.07
356	SLU 13	412	31	4371	-24.82	17.04	-0.07
356	SLU 14	419	32	4457	-25.58	17.32	-0.07
356	SLU 15	420	32	4459	-25.59	17.33	-0.07
356	SLU 16	414	31	4424	-25.3	17.1	-0.07
356	SLU 17	415	31	4425	-25.31	17.11	-0.07
356	SLU 18	431	32	4536	-25.63	17.81	-0.07
356	SLU 19	432	32	4537	-25.63	17.83	-0.07
356	SLU 20	434	32	4591	-26.12	17.9	-0.07
356	SLU 21	434	32	4592	-26.13	17.92	-0.07
356	SLU 22	407	30	4270	-24.29	16.84	-0.06
356	SLU 23	407	30	4273	-24.3	16.87	-0.06
356	SLU 24	415	31	4359	-25.07	17.15	-0.07
356	SLU 25	415	31	4360	-25.07	17.17	-0.07
356	SLU 26	410	31	4327	-24.8	16.96	-0.07
356	SLU 27	417	32	4414	-25.56	17.24	-0.07
356	SLU 28	417	32	4415	-25.57	17.25	-0.07
356	SLU 29	412	31	4380	-25.28	17.02	-0.07
356	SLU 30	412	31	4381	-25.29	17.03	-0.07
356	SLU 31	459	34	4790	-27.38	18.94	-0.07
356	SLU 32	466	35	4877	-28.15	19.22	-0.07
356	SLU 33	466	35	4878	-28.15	19.24	-0.07
356	SLU 34	461	35	4845	-27.88	19.03	-0.07
356	SLU 35	468	36	4931	-28.64	19.31	-0.08
356	SLU 36	469	36	4933	-28.65	19.32	-0.08
356	SLU 37	463	35	4898	-28.36	19.09	-0.07
356	SLU 38	464	35	4899	-28.37	19.1	-0.07
356	SLU 39	480	36	5010	-28.69	19.8	-0.08
356	SLU 40	481	36	5011	-28.7	19.82	-0.08
356	SLU 41	483	36	5065	-29.19	19.89	-0.08
356	SLU 42	483	36	5066	-29.19	19.91	-0.08
356	SLU 43	448	33	4773	-26.54	18.63	-0.07
356	SLU 44	449	33	4775	-26.56	18.65	-0.07
356	SLU 45	456	34	4861	-27.32	18.93	-0.07
356	SLU 46	456	34	4863	-27.33	18.95	-0.07
356	SLU 47	452	34	4830	-27.05	18.74	-0.07
356	SLU 48	459	35	4916	-27.82	19.02	-0.07
356	SLU 49	459	35	4917	-27.82	19.04	-0.07
356	SLU 50	453	34	4882	-27.54	18.8	-0.07
356	SLU 51	454	34	4884	-27.54	18.82	-0.07
356	SLU 52	500	37	5293	-29.64	20.73	-0.08
356	SLU 53	508	38	5379	-30.4	21.01	-0.08
356	SLU 54	508	38	5380	-30.41	21.02	-0.08
356	SLU 55	503	37	5348	-30.13	20.81	-0.08
356	SLU 56	510	38	5434	-30.9	21.09	-0.08
356	SLU 57	510	38	5435	-30.9	21.11	-0.08
356	SLU 58	505	38	5400	-30.62	20.87	-0.08
356	SLU 59	505	38	5401	-30.62	20.89	-0.08
356	SLU 60	522	38	5513	-30.94	21.59	-0.08
356	SLU 61	522	38	5514	-30.95	21.6	-0.08

Nodo	Cont.	Reazione a traslazione			Reazione a rotazione		
Ind.	N.br.	x	y	z	x	y	z
356	SLU 62	524	39	5567	-31.44	21.67	-0.08
356	SLU 63	525	39	5569	-31.45	21.69	-0.08
356	SLU 64	497	37	5247	-29.61	20.62	-0.08
356	SLU 65	498	37	5249	-29.62	20.64	-0.08
356	SLU 66	505	38	5335	-30.38	20.92	-0.08
356	SLU 67	505	38	5337	-30.39	20.94	-0.08
356	SLU 68	501	37	5304	-30.12	20.73	-0.08
356	SLU 69	508	38	5390	-30.88	21.01	-0.08
356	SLU 70	508	38	5391	-30.89	21.03	-0.08
356	SLU 71	502	38	5356	-30.6	20.79	-0.08
356	SLU 72	503	38	5357	-30.61	20.81	-0.08
356	SLU 73	549	41	5767	-32.7	22.72	-0.09
356	SLU 74	557	42	5853	-33.46	23	-0.09
356	SLU 75	557	42	5854	-33.47	23.01	-0.09
356	SLU 76	552	41	5821	-33.2	22.8	-0.09
356	SLU 77	559	42	5908	-33.96	23.08	-0.09
356	SLU 78	559	42	5909	-33.97	23.1	-0.09
356	SLU 79	554	42	5874	-33.68	22.86	-0.09
356	SLU 80	554	42	5875	-33.69	22.88	-0.09
356	SLU 81	571	42	5987	-34.01	23.58	-0.09
356	SLU 82	571	42	5988	-34.01	23.59	-0.09
356	SLU 83	573	43	6041	-34.5	23.66	-0.09
356	SLU 84	574	43	6043	-34.51	23.68	-0.09
356	SLE RA 1	372	27	3932	-22.1	15.42	-0.06
356	SLE RA 2	372	28	3933	-22.11	15.44	-0.06
356	SLE RA 3	377	28	3991	-22.62	15.63	-0.06
356	SLE RA 4	377	28	3992	-22.62	15.64	-0.06
356	SLE RA 5	374	28	3970	-22.44	15.5	-0.06
356	SLE RA 6	379	29	4027	-22.95	15.68	-0.06
356	SLE RA 7	379	29	4028	-22.95	15.69	-0.06
356	SLE RA 8	375	28	4005	-22.76	15.54	-0.06
356	SLE RA 9	375	28	4006	-22.77	15.55	-0.06
356	SLE RA 10	407	30	4279	-24.16	16.82	-0.06
356	SLE RA 11	411	31	4336	-24.67	17.01	-0.07
356	SLE RA 12	412	31	4337	-24.68	17.02	-0.07
356	SLE RA 13	408	30	4315	-24.49	16.88	-0.06
356	SLE RA 14	413	31	4372	-25	17.07	-0.07
356	SLE RA 15	413	31	4373	-25.01	17.08	-0.07
356	SLE RA 16	409	31	4350	-24.82	16.92	-0.07
356	SLE RA 17	410	31	4351	-24.82	16.93	-0.07
356	SLE RA 18	421	31	4425	-25.03	17.4	-0.07
356	SLE RA 19	421	31	4426	-25.04	17.41	-0.07
356	SLE RA 20	423	32	4461	-25.37	17.45	-0.07
356	SLE RA 21	423	32	4462	-25.37	17.46	-0.07
356	SLE FR 1	372	27	3932	-22.1	15.42	-0.06
356	SLE FR 2	372	27	3932	-22.1	15.43	-0.06
356	SLE FR 3	373	28	3946	-22.23	15.45	-0.06
356	SLE FR 4	387	29	4080	-22.98	16.02	-0.06
356	SLE FR 5	387	29	4094	-23.11	16.04	-0.06
356	SLE FR 6	396	29	4178	-23.57	16.41	-0.06
356	SLE QP 1	372	27	3932	-22.1	15.42	-0.06
356	SLE QP 2	387	29	4080	-22.98	16.01	-0.06
356	SLD 1	964	16	3977	-12.06	43.02	-0.03
356	SLD 2	964	16	3977	-12.06	43.02	-0.03
356	SLD 3	1070	30	4452	-27.35	47.51	-0.07
356	SLD 4	1070	30	4452	-27.35	47.51	-0.07
356	SLD 5	399	4	3329	3.49	17.3	0.01
356	SLD 6	399	4	3329	3.49	17.3	0.01
356	SLD 7	753	50	4912	-47.48	32.28	-0.13
356	SLD 8	753	50	4912	-47.48	32.28	-0.13
356	SLD 9	21	7	3248	1.52	-0.25	0.01
356	SLD 10	21	7	3248	1.52	-0.25	0.01
356	SLD 11	374	54	4831	-49.45	14.73	-0.13
356	SLD 12	374	54	4831	-49.45	14.73	-0.13
356	SLD 13	-297	27	3708	-18.61	-15.49	-0.05
356	SLD 14	-297	27	3708	-18.61	-15.49	-0.05
356	SLD 15	-191	41	4183	-33.9	-10.99	-0.09
356	SLD 16	-191	41	4183	-33.9	-10.99	-0.09
356	SLV 1	1729	-1	3828	2.62	78.79	0
356	SLV 2	1729	-1	3828	2.62	78.79	0
356	SLV 3	1982	32	4960	-33.2	89.54	-0.09
356	SLV 4	1982	32	4960	-33.2	89.54	-0.09
356	SLV 5	404	-30	2287	39.03	18.53	0.1
356	SLV 6	404	-30	2287	39.03	18.53	0.1
356	SLV 7	1250	80	6061	-80.38	54.39	-0.22
356	SLV 8	1250	80	6061	-80.38	54.39	-0.22
356	SLV 9	-477	-23	2099	34.42	-22.36	0.09
356	SLV 10	-477	-23	2099	34.42	-22.36	0.09
356	SLV 11	369	87	5872	-84.99	13.49	-0.23
356	SLV 12	369	87	5872	-84.99	13.49	-0.23
356	SLV 13	-1209	25	3200	-12.76	-57.52	-0.03
356	SLV 14	-1209	25	3200	-12.76	-57.52	-0.03
356	SLV 15	-955	58	4332	-48.58	-46.76	-0.12
356	SLV 16	-955	58	4332	-48.58	-46.76	-0.12
357	SLU 1	313	16	4122	-14.77	11.48	-0.05
357	SLU 2	314	16	4124	-14.77	11.5	-0.05
357	SLU 3	320	17	4220	-15.31	11.66	-0.05
357	SLU 4	320	17	4222	-15.31	11.67	-0.05
357	SLU 5	316	17	4185	-15.12	11.51	-0.05
357	SLU 6	321	17	4281	-15.65	11.68	-0.05

Nodo	Cont.	Reazione a traslazione			Reazione a rotazione		
Ind.	N.br.	x	y	z	x	y	z
357	SLU 7	322	17	4282	-15.66	11.69	-0.05
357	SLU 8	317	17	4243	-15.46	11.51	-0.05
357	SLU 9	317	17	4244	-15.46	11.52	-0.05
357	SLU 10	360	19	4693	-16.93	13.19	-0.05
357	SLU 11	365	19	4789	-17.47	13.35	-0.05
357	SLU 12	366	19	4790	-17.47	13.37	-0.05
357	SLU 13	361	19	4753	-17.28	13.21	-0.05
357	SLU 14	367	20	4849	-17.81	13.37	-0.05
357	SLU 15	367	20	4851	-17.82	13.38	-0.05
357	SLU 16	362	19	4811	-17.62	13.2	-0.05
357	SLU 17	363	19	4813	-17.62	13.21	-0.05
357	SLU 18	379	20	4934	-17.85	13.9	-0.05
357	SLU 19	379	20	4935	-17.86	13.91	-0.05
357	SLU 20	380	20	4994	-18.2	13.91	-0.06
357	SLU 21	381	20	4996	-18.2	13.92	-0.06
357	SLU 22	357	19	4644	-16.91	13.06	-0.05
357	SLU 23	357	19	4646	-16.92	13.08	-0.05
357	SLU 24	363	19	4742	-17.45	13.24	-0.05
357	SLU 25	363	19	4744	-17.45	13.25	-0.05
357	SLU 26	359	19	4707	-17.26	13.09	-0.05
357	SLU 27	365	20	4803	-17.8	13.26	-0.05
357	SLU 28	365	20	4804	-17.8	13.27	-0.05
357	SLU 29	360	19	4765	-17.6	13.09	-0.05
357	SLU 30	360	19	4766	-17.61	13.1	-0.05
357	SLU 31	403	21	5215	-19.08	14.77	-0.06
357	SLU 32	409	22	5311	-19.61	14.93	-0.06
357	SLU 33	409	22	5312	-19.61	14.94	-0.06
357	SLU 34	405	21	5275	-19.42	14.78	-0.06
357	SLU 35	410	22	5371	-19.96	14.95	-0.06
357	SLU 36	411	22	5373	-19.96	14.96	-0.06
357	SLU 37	406	22	5333	-19.76	14.78	-0.06
357	SLU 38	406	22	5335	-19.77	14.79	-0.06
357	SLU 39	422	22	5456	-19.99	15.47	-0.06
357	SLU 40	422	22	5457	-20	15.49	-0.06
357	SLU 41	424	22	5517	-20.34	15.49	-0.06
357	SLU 42	424	22	5518	-20.35	15.5	-0.06
357	SLU 43	393	20	5179	-18.46	14.38	-0.06
357	SLU 44	393	20	5182	-18.47	14.4	-0.06
357	SLU 45	399	21	5278	-19	14.56	-0.06
357	SLU 46	399	21	5279	-19.01	14.58	-0.06
357	SLU 47	395	21	5242	-18.82	14.42	-0.06
357	SLU 48	400	21	5338	-19.35	14.58	-0.06
357	SLU 49	401	21	5340	-19.35	14.59	-0.06
357	SLU 50	396	21	5300	-19.15	14.41	-0.06
357	SLU 51	396	21	5302	-19.16	14.43	-0.06
357	SLU 52	439	23	5750	-20.63	16.09	-0.06
357	SLU 53	445	23	5846	-21.16	16.26	-0.06
357	SLU 54	445	23	5848	-21.17	16.27	-0.06
357	SLU 55	441	23	5811	-20.98	16.11	-0.06
357	SLU 56	446	24	5907	-21.51	16.27	-0.07
357	SLU 57	447	24	5908	-21.51	16.28	-0.07
357	SLU 58	442	23	5869	-21.31	16.11	-0.07
357	SLU 59	442	23	5870	-21.32	16.12	-0.07
357	SLU 60	458	24	5991	-21.55	16.8	-0.07
357	SLU 61	458	24	5993	-21.55	16.81	-0.07
357	SLU 62	460	24	6052	-21.89	16.82	-0.07
357	SLU 63	460	24	6053	-21.9	16.83	-0.07
357	SLU 64	436	23	5701	-20.6	15.96	-0.06
357	SLU 65	436	23	5704	-20.61	15.98	-0.06
357	SLU 66	442	23	5800	-21.14	16.14	-0.06
357	SLU 67	442	23	5801	-21.15	16.15	-0.06
357	SLU 68	438	23	5764	-20.96	16	-0.06
357	SLU 69	444	24	5860	-21.49	16.16	-0.07
357	SLU 70	444	24	5862	-21.5	16.17	-0.07
357	SLU 71	439	23	5822	-21.3	15.99	-0.07
357	SLU 72	440	23	5824	-21.3	16	-0.07
357	SLU 73	482	25	6272	-22.77	17.67	-0.07
357	SLU 74	488	26	6368	-23.3	17.83	-0.07
357	SLU 75	488	26	6370	-23.31	17.85	-0.07
357	SLU 76	484	25	6333	-23.12	17.69	-0.07
357	SLU 77	489	26	6429	-23.65	17.85	-0.07
357	SLU 78	490	26	6430	-23.66	17.86	-0.07
357	SLU 79	485	26	6391	-23.46	17.68	-0.07
357	SLU 80	485	26	6392	-23.46	17.7	-0.07
357	SLU 81	501	26	6513	-23.69	18.38	-0.07
357	SLU 82	502	26	6515	-23.69	18.39	-0.07
357	SLU 83	503	26	6574	-24.04	18.39	-0.07
357	SLU 84	503	26	6576	-24.04	18.4	-0.07
357	SLE RA 1	326	17	4271	-15.38	11.93	-0.05
357	SLE RA 2	326	17	4273	-15.38	11.94	-0.05
357	SLE RA 3	330	17	4337	-15.74	12.05	-0.05
357	SLE RA 4	330	17	4338	-15.74	12.06	-0.05
357	SLE RA 5	327	17	4313	-15.62	11.95	-0.05
357	SLE RA 6	331	18	4377	-15.97	12.06	-0.05
357	SLE RA 7	331	18	4378	-15.97	12.07	-0.05
357	SLE RA 8	328	17	4352	-15.84	11.95	-0.05
357	SLE RA 9	328	17	4353	-15.84	11.96	-0.05
357	SLE RA 10	357	18	4652	-16.82	13.07	-0.05
357	SLE RA 11	360	19	4716	-17.18	13.18	-0.05
357	SLE RA 12	361	19	4717	-17.18	13.19	-0.05

Nodo	Cont.	Reazione a traslazione			Reazione a rotazione		
Ind.	N.br.	x	y	z	x	y	z
357	SLE RA 13	358	19	4692	-17.05	13.08	-0.05
357	SLE RA 14	362	19	4756	-17.41	13.19	-0.05
357	SLE RA 15	362	19	4757	-17.41	13.2	-0.05
357	SLE RA 16	358	19	4731	-17.28	13.08	-0.05
357	SLE RA 17	359	19	4732	-17.28	13.09	-0.05
357	SLE RA 18	369	19	4812	-17.44	13.54	-0.05
357	SLE RA 19	370	19	4813	-17.44	13.55	-0.05
357	SLE RA 20	370	19	4853	-17.67	13.55	-0.05
357	SLE RA 21	371	19	4854	-17.67	13.56	-0.05
357	SLE FR 1	326	17	4271	-15.38	11.93	-0.05
357	SLE FR 2	326	17	4271	-15.38	11.93	-0.05
357	SLE FR 3	326	17	4287	-15.47	11.93	-0.05
357	SLE FR 4	339	18	4434	-16	12.42	-0.05
357	SLE FR 5	339	18	4449	-16.09	12.42	-0.05
357	SLE FR 6	348	18	4542	-16.41	12.74	-0.05
357	SLE QP 1	326	17	4271	-15.38	11.93	-0.05
357	SLE QP 2	339	18	4433	-16	12.41	-0.05
357	SLD 1	885	7	4329	-7.1	38.2	-0.02
357	SLD 2	885	7	4329	-7.1	38.2	-0.02
357	SLD 3	997	15	4876	-17.32	42.65	-0.06
357	SLD 4	997	15	4876	-17.32	42.65	-0.06
357	SLD 5	334	3	3572	2.18	13.4	0.01
357	SLD 6	334	3	3572	2.18	13.4	0.01
357	SLD 7	705	28	5396	-31.9	28.23	-0.1
357	SLD 8	705	28	5396	-31.9	28.23	-0.1
357	SLD 9	-27	7	3471	-0.09	-3.41	0
357	SLD 10	-27	7	3471	-0.09	-3.41	0
357	SLD 11	344	32	5295	-34.17	11.43	-0.11
357	SLD 12	344	32	5295	-34.17	11.43	-0.11
357	SLD 13	-319	21	3991	-14.67	-17.82	-0.04
357	SLD 14	-319	21	3991	-14.67	-17.82	-0.04
357	SLD 15	-207	28	4538	-24.89	-13.37	-0.08
357	SLD 16	-207	28	4538	-24.89	-13.37	-0.08
357	SLV 1	1608	-7	4176	4.86	72.36	0.01
357	SLV 2	1608	-7	4176	4.86	72.36	0.01
357	SLV 3	1874	11	5481	-19.11	83	-0.07
357	SLV 4	1874	11	5481	-19.11	83	-0.07
357	SLV 5	315	-16	2376	26.61	14.26	0.09
357	SLV 6	315	-16	2376	26.61	14.26	0.09
357	SLV 7	1204	42	6728	-53.28	49.73	-0.17
357	SLV 8	1204	42	6728	-53.28	49.73	-0.17
357	SLV 9	-526	-7	2139	21.29	-24.9	0.08
357	SLV 10	-526	-7	2139	21.29	-24.9	0.08
357	SLV 11	362	51	6491	-58.6	10.57	-0.19
357	SLV 12	362	51	6491	-58.6	10.57	-0.19
357	SLV 13	-1197	24	3385	-12.88	-58.17	-0.03
357	SLV 14	-1197	24	3385	-12.88	-58.17	-0.03
357	SLV 15	-930	42	4691	-36.85	-47.53	-0.11
357	SLV 16	-930	42	4691	-36.85	-47.53	-0.11
358	SLU 1	240	1	4438	-6.95	11.41	-0.02
358	SLU 2	240	1	4441	-6.95	11.44	-0.02
358	SLU 3	244	1	4547	-7.21	11.61	-0.02
358	SLU 4	244	1	4549	-7.21	11.62	-0.02
358	SLU 5	241	1	4508	-7.12	11.45	-0.02
358	SLU 6	244	1	4614	-7.38	11.62	-0.02
358	SLU 7	244	1	4615	-7.38	11.64	-0.02
358	SLU 8	240	1	4572	-7.29	11.45	-0.02
358	SLU 9	241	1	4573	-7.29	11.46	-0.02
358	SLU 10	275	1	5059	-7.99	13.02	-0.02
358	SLU 11	278	1	5165	-8.25	13.2	-0.03
358	SLU 12	279	1	5167	-8.25	13.21	-0.03
358	SLU 13	275	1	5126	-8.16	13.04	-0.02
358	SLU 14	278	1	5232	-8.42	13.21	-0.03
358	SLU 15	279	1	5233	-8.42	13.22	-0.03
358	SLU 16	275	1	5190	-8.33	13.03	-0.03
358	SLU 17	275	1	5191	-8.33	13.05	-0.03
358	SLU 18	289	1	5321	-8.44	13.68	-0.03
358	SLU 19	290	1	5323	-8.44	13.7	-0.03
358	SLU 20	289	1	5388	-8.6	13.7	-0.03
358	SLU 21	290	1	5390	-8.61	13.71	-0.03
358	SLU 22	273	1	5008	-7.98	12.94	-0.02
358	SLU 23	273	1	5011	-7.98	12.96	-0.02
358	SLU 24	276	1	5116	-8.24	13.13	-0.03
358	SLU 25	277	1	5118	-8.24	13.15	-0.03
358	SLU 26	273	1	5077	-8.15	12.98	-0.02
358	SLU 27	277	1	5183	-8.4	13.15	-0.03
358	SLU 28	277	1	5185	-8.41	13.16	-0.03
358	SLU 29	273	1	5141	-8.31	12.97	-0.03
358	SLU 30	273	1	5143	-8.32	12.98	-0.03
358	SLU 31	308	1	5629	-9.02	14.55	-0.03
358	SLU 32	311	1	5734	-9.27	14.72	-0.03
358	SLU 33	311	1	5736	-9.28	14.73	-0.03
358	SLU 34	308	1	5695	-9.19	14.56	-0.03
358	SLU 35	311	1	5801	-9.44	14.74	-0.03
358	SLU 36	311	1	5803	-9.45	14.75	-0.03
358	SLU 37	307	1	5759	-9.35	14.56	-0.03
358	SLU 38	308	1	5761	-9.36	14.57	-0.03
358	SLU 39	322	1	5891	-9.46	15.21	-0.03
358	SLU 40	322	1	5892	-9.46	15.22	-0.03
358	SLU 41	322	1	5957	-9.63	15.22	-0.03

Nodo	Cont.	Reazione a traslazione			Reazione a rotazione		
Ind.	N.br.	x	y	z	x	y	z
358	SLU 42	322	1	5959	-9.63	15.24	-0.03
358	SLU 43	301	1	5575	-8.68	14.32	-0.03
358	SLU 44	301	1	5578	-8.69	14.34	-0.03
358	SLU 45	305	1	5683	-8.94	14.51	-0.03
358	SLU 46	305	1	5685	-8.94	14.52	-0.03
358	SLU 47	301	1	5644	-8.86	14.35	-0.03
358	SLU 48	305	1	5750	-9.11	14.53	-0.03
358	SLU 49	305	1	5752	-9.11	14.54	-0.03
358	SLU 50	301	1	5708	-9.02	14.35	-0.03
358	SLU 51	301	1	5710	-9.02	14.36	-0.03
358	SLU 52	336	1	6196	-9.73	15.93	-0.03
358	SLU 53	339	1	6301	-9.98	16.1	-0.03
358	SLU 54	339	1	6303	-9.98	16.11	-0.03
358	SLU 55	336	1	6262	-9.89	15.94	-0.03
358	SLU 56	339	1	6368	-10.15	16.11	-0.03
358	SLU 57	339	1	6370	-10.15	16.13	-0.03
358	SLU 58	336	1	6326	-10.06	15.93	-0.03
358	SLU 59	336	1	6328	-10.06	15.95	-0.03
358	SLU 60	350	1	6458	-10.17	16.58	-0.03
358	SLU 61	350	1	6459	-10.17	16.6	-0.03
358	SLU 62	350	1	6524	-10.34	16.6	-0.03
358	SLU 63	350	1	6526	-10.34	16.61	-0.03
358	SLU 64	333	1	6144	-9.71	15.84	-0.03
358	SLU 65	334	1	6147	-9.71	15.86	-0.03
358	SLU 66	337	1	6253	-9.97	16.03	-0.03
358	SLU 67	338	1	6255	-9.97	16.05	-0.03
358	SLU 68	334	1	6214	-9.88	15.88	-0.03
358	SLU 69	337	1	6319	-10.14	16.05	-0.03
358	SLU 70	338	1	6321	-10.14	16.06	-0.03
358	SLU 71	334	1	6277	-10.05	15.87	-0.03
358	SLU 72	334	1	6279	-10.05	15.89	-0.03
358	SLU 73	368	1	6765	-10.75	17.45	-0.03
358	SLU 74	372	2	6871	-11.01	17.62	-0.03
358	SLU 75	372	2	6872	-11.01	17.64	-0.03
358	SLU 76	369	2	6832	-10.92	17.47	-0.03
358	SLU 77	372	2	6937	-11.18	17.64	-0.03
358	SLU 78	372	2	6939	-11.18	17.65	-0.03
358	SLU 79	368	2	6895	-11.09	17.46	-0.03
358	SLU 80	368	2	6897	-11.09	17.47	-0.03
358	SLU 81	383	2	7027	-11.19	18.11	-0.03
358	SLU 82	383	2	7029	-11.2	18.12	-0.03
358	SLU 83	383	2	7093	-11.36	18.12	-0.03
358	SLU 84	383	2	7095	-11.37	18.14	-0.03
358	SLE RA 1	249	1	4601	-7.24	11.85	-0.02
358	SLE RA 2	250	1	4603	-7.25	11.87	-0.02
358	SLE RA 3	252	1	4674	-7.42	11.98	-0.02
358	SLE RA 4	252	1	4675	-7.42	11.99	-0.02
358	SLE RA 5	250	1	4647	-7.36	11.88	-0.02
358	SLE RA 6	252	1	4718	-7.53	11.99	-0.02
358	SLE RA 7	252	1	4719	-7.53	12	-0.02
358	SLE RA 8	249	1	4690	-7.47	11.87	-0.02
358	SLE RA 9	250	1	4691	-7.47	11.88	-0.02
358	SLE RA 10	273	1	5015	-7.94	12.92	-0.02
358	SLE RA 11	275	1	5086	-8.11	13.04	-0.02
358	SLE RA 12	275	1	5087	-8.11	13.05	-0.02
358	SLE RA 13	273	1	5059	-8.05	12.93	-0.02
358	SLE RA 14	275	1	5130	-8.22	13.05	-0.03
358	SLE RA 15	275	1	5131	-8.22	13.06	-0.03
358	SLE RA 16	273	1	5102	-8.16	12.93	-0.02
358	SLE RA 17	273	1	5103	-8.16	12.94	-0.02
358	SLE RA 18	282	1	5190	-8.23	13.36	-0.03
358	SLE RA 19	282	1	5191	-8.24	13.37	-0.03
358	SLE RA 20	282	1	5234	-8.35	13.37	-0.03
358	SLE RA 21	282	1	5235	-8.35	13.38	-0.03
358	SLE FR 1	249	1	4601	-7.24	11.85	-0.02
358	SLE FR 2	249	1	4602	-7.24	11.85	-0.02
358	SLE FR 3	249	1	4619	-7.29	11.85	-0.02
358	SLE FR 4	259	1	4778	-7.54	12.31	-0.02
358	SLE FR 5	259	1	4795	-7.59	12.31	-0.02
358	SLE FR 6	266	1	4895	-7.74	12.61	-0.02
358	SLE QP 1	249	1	4601	-7.24	11.85	-0.02
358	SLE QP 2	259	1	4778	-7.54	12.3	-0.02
358	SLD 1	799	5	4234	-8.37	38.23	-0.03
358	SLD 2	799	5	4234	-8.37	38.23	-0.03
358	SLD 3	909	10	4877	-13.65	42.96	0
358	SLD 4	909	10	4877	-13.65	42.96	0
358	SLD 5	255	-7	3640	0.23	12.9	-0.06
358	SLD 6	255	-7	3640	0.23	12.9	-0.06
358	SLD 7	620	13	5782	-17.39	28.68	0.02
358	SLD 8	620	13	5782	-17.39	28.68	0.02
358	SLD 9	-102	-11	3773	2.31	-4.08	-0.07
358	SLD 10	-102	-11	3773	2.31	-4.08	-0.07
358	SLD 11	263	9	5915	-15.31	11.71	0.02
358	SLD 12	263	9	5915	-15.31	11.71	0.02
358	SLD 13	-391	-8	4679	-1.43	-18.36	-0.05
358	SLD 14	-391	-8	4679	-1.43	-18.36	-0.05
358	SLD 15	-281	-3	5321	-6.72	-13.62	-0.02
358	SLD 16	-281	-3	5321	-6.72	-13.62	-0.02
358	SLV 1	1514	9	3489	-9.44	72.51	-0.03
358	SLV 2	1514	9	3489	-9.44	72.51	-0.03

Nodo	Cont.	Reazione a traslazione			Reazione a rotazione		
Ind.	N.br.	x	y	z	x	y	z
358	SLV 3	1777	23	5024	-21.89	83.92	0.03
358	SLV 4	1777	23	5024	-21.89	83.92	0.03
358	SLV 5	236	-18	2064	10.79	13.07	-0.11
358	SLV 6	236	-18	2064	10.79	13.07	-0.11
358	SLV 7	1114	29	7179	-30.74	51.09	0.08
358	SLV 8	1114	29	7179	-30.74	51.09	0.08
358	SLV 9	-596	-27	2376	15.66	-26.48	-0.13
358	SLV 10	-596	-27	2376	15.66	-26.48	-0.13
358	SLV 11	282	20	7492	-25.87	11.54	0.07
358	SLV 12	282	20	7492	-25.87	11.54	0.07
358	SLV 13	-1259	-21	4532	6.81	-59.31	-0.08
358	SLV 14	-1259	-21	4532	6.81	-59.31	-0.08
358	SLV 15	-995	-7	6066	-5.65	-47.9	-0.02
358	SLV 16	-995	-7	6066	-5.65	-47.9	-0.02
359	SLU 1	44	-16	4701	0.1	-1.95	-0.01
359	SLU 2	44	-16	4704	0.1	-1.95	-0.01
359	SLU 3	41	-17	4818	0.09	-2.24	-0.01
359	SLU 4	41	-17	4820	0.09	-2.24	-0.01
359	SLU 5	40	-16	4775	0.09	-2.23	-0.01
359	SLU 6	37	-17	4889	0.08	-2.52	-0.01
359	SLU 7	37	-17	4891	0.08	-2.52	-0.01
359	SLU 8	36	-17	4844	0.08	-2.51	-0.01
359	SLU 9	36	-17	4846	0.08	-2.51	-0.01
359	SLU 10	51	-18	5363	0.08	-2.19	-0.01
359	SLU 11	48	-19	5477	0.07	-2.49	-0.01
359	SLU 12	48	-19	5479	0.07	-2.48	-0.01
359	SLU 13	47	-19	5435	0.07	-2.47	-0.01
359	SLU 14	44	-19	5549	0.06	-2.77	-0.01
359	SLU 15	44	-19	5550	0.06	-2.76	-0.01
359	SLU 16	42	-19	5503	0.06	-2.76	-0.01
359	SLU 17	43	-19	5505	0.06	-2.76	-0.01
359	SLU 18	54	-19	5643	0.07	-2.3	-0.01
359	SLU 19	54	-19	5644	0.07	-2.3	-0.01
359	SLU 20	50	-20	5714	0.06	-2.58	-0.02
359	SLU 21	50	-20	5716	0.06	-2.58	-0.02
359	SLU 22	49	-18	5310	0.08	-2.28	-0.01
359	SLU 23	49	-18	5313	0.08	-2.27	-0.01
359	SLU 24	46	-19	5427	0.07	-2.56	-0.01
359	SLU 25	46	-19	5429	0.07	-2.56	-0.01
359	SLU 26	45	-19	5384	0.07	-2.55	-0.01
359	SLU 27	42	-19	5498	0.06	-2.85	-0.01
359	SLU 28	42	-19	5500	0.06	-2.84	-0.01
359	SLU 29	41	-19	5453	0.06	-2.84	-0.01
359	SLU 30	41	-19	5454	0.06	-2.83	-0.01
359	SLU 31	56	-21	5972	0.06	-2.52	-0.02
359	SLU 32	53	-21	6086	0.05	-2.81	-0.02
359	SLU 33	53	-21	6088	0.05	-2.81	-0.02
359	SLU 34	52	-21	6043	0.05	-2.8	-0.02
359	SLU 35	49	-21	6157	0.04	-3.09	-0.02
359	SLU 36	49	-21	6159	0.04	-3.09	-0.02
359	SLU 37	48	-21	6112	0.04	-3.08	-0.02
359	SLU 38	48	-21	6114	0.04	-3.08	-0.02
359	SLU 39	59	-22	6251	0.05	-2.63	-0.02
359	SLU 40	59	-22	6253	0.05	-2.62	-0.02
359	SLU 41	55	-22	6323	0.04	-2.91	-0.02
359	SLU 42	55	-22	6325	0.04	-2.9	-0.02
359	SLU 43	55	-20	5902	0.14	-2.43	-0.02
359	SLU 44	55	-20	5906	0.14	-2.42	-0.02
359	SLU 45	52	-21	6019	0.13	-2.71	-0.02
359	SLU 46	52	-21	6021	0.13	-2.71	-0.02
359	SLU 47	51	-21	5977	0.13	-2.7	-0.02
359	SLU 48	48	-21	6091	0.12	-3	-0.02
359	SLU 49	48	-21	6093	0.12	-2.99	-0.02
359	SLU 50	47	-21	6045	0.12	-2.99	-0.02
359	SLU 51	47	-21	6047	0.11	-2.98	-0.02
359	SLU 52	62	-22	6565	0.12	-2.67	-0.02
359	SLU 53	59	-23	6679	0.11	-2.96	-0.02
359	SLU 54	59	-23	6680	0.11	-2.96	-0.02
359	SLU 55	58	-23	6636	0.11	-2.95	-0.02
359	SLU 56	55	-23	6750	0.1	-3.24	-0.02
359	SLU 57	55	-23	6752	0.1	-3.24	-0.02
359	SLU 58	54	-23	6704	0.1	-3.23	-0.02
359	SLU 59	54	-23	6706	0.1	-3.23	-0.02
359	SLU 60	65	-23	6844	0.11	-2.78	-0.02
359	SLU 61	65	-23	6846	0.11	-2.77	-0.02
359	SLU 62	61	-24	6915	0.1	-3.06	-0.02
359	SLU 63	61	-24	6917	0.1	-3.05	-0.02
359	SLU 64	60	-22	6511	0.12	-2.75	-0.02
359	SLU 65	61	-22	6514	0.12	-2.74	-0.02
359	SLU 66	57	-23	6628	0.11	-3.04	-0.02
359	SLU 67	57	-23	6630	0.11	-3.03	-0.02
359	SLU 68	57	-23	6586	0.11	-3.03	-0.02
359	SLU 69	53	-23	6700	0.1	-3.32	-0.02
359	SLU 70	53	-23	6702	0.1	-3.32	-0.02
359	SLU 71	52	-23	6654	0.1	-3.31	-0.02
359	SLU 72	52	-23	6656	0.1	-3.31	-0.02
359	SLU 73	68	-25	7174	0.1	-2.99	-0.02
359	SLU 74	64	-25	7287	0.09	-3.28	-0.02
359	SLU 75	64	-25	7289	0.09	-3.28	-0.02
359	SLU 76	63	-25	7245	0.09	-3.27	-0.02

Nodo	Cont.	Reazione a traslazione			Reazione a rotazione		
Ind.	N.br.	x	y	z	x	y	z
359	SLU 77	60	-26	7359	0.08	-3.57	-0.02
359	SLU 78	60	-26	7361	0.08	-3.56	-0.02
359	SLU 79	59	-25	7313	0.08	-3.56	-0.02
359	SLU 80	59	-25	7315	0.08	-3.55	-0.02
359	SLU 81	70	-26	7453	0.09	-3.1	-0.02
359	SLU 82	70	-26	7455	0.09	-3.1	-0.02
359	SLU 83	66	-26	7524	0.08	-3.38	-0.02
359	SLU 84	66	-26	7526	0.08	-3.38	-0.02
359	SLE RA 1	45	-17	4875	0.1	-2.04	-0.01
359	SLE RA 2	46	-17	4877	0.1	-2.04	-0.01
359	SLE RA 3	43	-17	4953	0.09	-2.24	-0.01
359	SLE RA 4	43	-17	4954	0.09	-2.23	-0.01
359	SLE RA 5	43	-17	4925	0.09	-2.23	-0.01
359	SLE RA 6	41	-17	5000	0.08	-2.42	-0.01
359	SLE RA 7	41	-17	5002	0.08	-2.42	-0.01
359	SLE RA 8	40	-17	4970	0.08	-2.42	-0.01
359	SLE RA 9	40	-17	4971	0.08	-2.42	-0.01
359	SLE RA 10	50	-18	5316	0.08	-2.2	-0.01
359	SLE RA 11	48	-19	5392	0.08	-2.4	-0.01
359	SLE RA 12	48	-19	5394	0.08	-2.4	-0.01
359	SLE RA 13	47	-18	5364	0.07	-2.39	-0.01
359	SLE RA 14	45	-19	5440	0.07	-2.59	-0.01
359	SLE RA 15	45	-19	5441	0.07	-2.59	-0.01
359	SLE RA 16	44	-19	5410	0.07	-2.58	-0.01
359	SLE RA 17	44	-19	5411	0.07	-2.58	-0.01
359	SLE RA 18	52	-19	5503	0.08	-2.28	-0.01
359	SLE RA 19	52	-19	5504	0.08	-2.28	-0.01
359	SLE RA 20	49	-19	5550	0.07	-2.47	-0.01
359	SLE RA 21	49	-19	5551	0.07	-2.46	-0.01
359	SLE FR 1	45	-17	4875	0.1	-2.04	-0.01
359	SLE FR 2	45	-17	4875	0.1	-2.04	-0.01
359	SLE FR 3	44	-17	4894	0.09	-2.12	-0.01
359	SLE FR 4	47	-17	5064	0.09	-2.11	-0.01
359	SLE FR 5	46	-17	5082	0.09	-2.19	-0.01
359	SLE FR 6	49	-18	5189	0.09	-2.16	-0.01
359	SLE QP 1	45	-17	4875	0.1	-2.04	-0.01
359	SLE QP 2	47	-17	5063	0.09	-2.11	-0.01
359	SLD 1	601	-8	4382	-3.38	25.15	0.01
359	SLD 2	601	-8	4382	-3.38	25.15	0.01
359	SLD 3	690	-17	5159	-0.93	28.06	-0.01
359	SLD 4	690	-17	5159	-0.93	28.06	-0.01
359	SLD 5	79	-1	3680	-4.66	1.65	0.01
359	SLD 6	79	-1	3680	-4.66	1.65	0.01
359	SLD 7	375	-30	6271	3.5	11.36	-0.03
359	SLD 8	375	-30	6271	3.5	11.36	-0.03
359	SLD 9	-280	-4	3855	-3.32	-15.58	0.01
359	SLD 10	-280	-4	3855	-3.32	-15.58	0.01
359	SLD 11	16	-33	6446	4.85	-5.88	-0.04
359	SLD 12	16	-33	6446	4.85	-5.88	-0.04
359	SLD 13	-595	-18	4967	1.11	-32.29	-0.02
359	SLD 14	-595	-18	4967	1.11	-32.29	-0.02
359	SLD 15	-506	-27	5744	3.56	-29.38	-0.03
359	SLD 16	-506	-27	5744	3.56	-29.38	-0.03
359	SLV 1	1333	4	3448	-8.09	61.29	0.03
359	SLV 2	1333	4	3448	-8.09	61.29	0.03
359	SLV 3	1548	-16	5306	-2.26	68.34	0
359	SLV 4	1548	-16	5306	-2.26	68.34	0
359	SLV 5	108	20	1760	-11.2	6.22	0.06
359	SLV 6	108	20	1760	-11.2	6.22	0.06
359	SLV 7	823	-48	7955	8.23	29.71	-0.07
359	SLV 8	823	-48	7955	8.23	29.71	-0.07
359	SLV 9	-728	14	2171	-8.05	-33.94	0.04
359	SLV 10	-728	14	2171	-8.05	-33.94	0.04
359	SLV 11	-13	-55	8367	11.38	-10.45	-0.08
359	SLV 12	-13	-55	8367	11.38	-10.45	-0.08
359	SLV 13	-1453	-18	4820	2.44	-72.56	-0.02
359	SLV 14	-1453	-18	4820	2.44	-72.56	-0.02
359	SLV 15	-1238	-39	6678	8.27	-65.52	-0.06
359	SLV 16	-1238	-39	6678	8.27	-65.52	-0.06
360	SLU 1	-157	-778	6971	-453.66	-4.92	-0.13
360	SLU 2	-157	-778	6974	-453.79	-4.91	-0.13
360	SLU 3	-167	-802	7152	-466.33	-5.28	-0.13
360	SLU 4	-167	-801	7154	-466.41	-5.28	-0.13
360	SLU 5	-165	-792	7085	-461.52	-5.24	-0.13
360	SLU 6	-175	-816	7262	-474.06	-5.61	-0.14
360	SLU 7	-175	-815	7265	-474.14	-5.61	-0.14
360	SLU 8	-173	-806	7191	-469.12	-5.57	-0.14
360	SLU 9	-173	-806	7194	-469.2	-5.57	-0.14
360	SLU 10	-179	-886	7954	-516.82	-5.65	-0.15
360	SLU 11	-189	-910	8132	-529.36	-6.02	-0.15
360	SLU 12	-188	-910	8134	-529.44	-6.02	-0.15
360	SLU 13	-187	-900	8064	-524.55	-5.98	-0.15
360	SLU 14	-197	-924	8242	-537.09	-6.35	-0.16
360	SLU 15	-197	-924	8245	-537.17	-6.35	-0.16
360	SLU 16	-195	-915	8171	-532.15	-6.31	-0.16
360	SLU 17	-195	-914	8173	-532.23	-6.31	-0.16
360	SLU 18	-188	-933	8370	-543.71	-5.98	-0.16
360	SLU 19	-188	-933	8373	-543.78	-5.97	-0.16
360	SLU 20	-196	-947	8481	-551.43	-6.3	-0.16
360	SLU 21	-196	-947	8483	-551.51	-6.3	-0.16

Nodo	Cont.	Reazione a traslazione			Reazione a rotazione		
Ind.	N.br.	x	y	z	x	y	z
360	SLU 22	-180	-883	7884	-513.42	-5.69	-0.15
360	SLU 23	-180	-883	7887	-513.54	-5.68	-0.15
360	SLU 24	-190	-907	8065	-526.09	-6.06	-0.15
360	SLU 25	-190	-906	8067	-526.16	-6.05	-0.15
360	SLU 26	-188	-897	7998	-521.27	-6.01	-0.15
360	SLU 27	-198	-921	8176	-533.82	-6.38	-0.16
360	SLU 28	-198	-920	8178	-533.89	-6.38	-0.16
360	SLU 29	-196	-911	8104	-528.88	-6.35	-0.16
360	SLU 30	-196	-911	8107	-528.95	-6.34	-0.16
360	SLU 31	-202	-991	8867	-576.58	-6.42	-0.17
360	SLU 32	-211	-1015	9045	-589.12	-6.8	-0.18
360	SLU 33	-211	-1015	9047	-589.2	-6.79	-0.18
360	SLU 34	-210	-1005	8978	-584.31	-6.75	-0.17
360	SLU 35	-220	-1029	9155	-596.85	-7.13	-0.18
360	SLU 36	-220	-1029	9158	-596.93	-7.12	-0.18
360	SLU 37	-218	-1020	9084	-591.91	-7.09	-0.18
360	SLU 38	-218	-1019	9086	-591.98	-7.08	-0.18
360	SLU 39	-211	-1038	9283	-603.46	-6.75	-0.18
360	SLU 40	-211	-1038	9286	-603.54	-6.75	-0.18
360	SLU 41	-219	-1052	9394	-611.19	-7.08	-0.18
360	SLU 42	-219	-1052	9396	-611.27	-7.07	-0.18
360	SLU 43	-196	-975	8749	-569.27	-6.13	-0.16
360	SLU 44	-196	-975	8752	-569.4	-6.12	-0.16
360	SLU 45	-206	-999	8930	-581.94	-6.49	-0.16
360	SLU 46	-206	-999	8932	-582.02	-6.49	-0.16
360	SLU 47	-204	-989	8863	-577.13	-6.45	-0.16
360	SLU 48	-214	-1013	9041	-589.67	-6.82	-0.17
360	SLU 49	-214	-1013	9043	-589.75	-6.82	-0.17
360	SLU 50	-213	-1003	8970	-584.73	-6.78	-0.17
360	SLU 51	-212	-1003	8972	-584.81	-6.78	-0.17
360	SLU 52	-218	-1084	9732	-632.43	-6.86	-0.18
360	SLU 53	-228	-1107	9910	-644.97	-7.23	-0.19
360	SLU 54	-228	-1107	9912	-645.05	-7.23	-0.18
360	SLU 55	-226	-1098	9843	-640.16	-7.19	-0.18
360	SLU 56	-236	-1122	10020	-652.7	-7.56	-0.19
360	SLU 57	-236	-1121	10023	-652.78	-7.56	-0.19
360	SLU 58	-234	-1112	9949	-647.76	-7.52	-0.19
360	SLU 59	-234	-1112	9952	-647.84	-7.52	-0.19
360	SLU 60	-227	-1130	10149	-659.32	-7.19	-0.19
360	SLU 61	-227	-1130	10151	-659.39	-7.18	-0.19
360	SLU 62	-235	-1144	10259	-667.04	-7.51	-0.19
360	SLU 63	-235	-1144	10261	-667.12	-7.51	-0.19
360	SLU 64	-219	-1080	9662	-629.03	-6.9	-0.18
360	SLU 65	-219	-1080	9665	-629.16	-6.89	-0.18
360	SLU 66	-229	-1104	9843	-641.7	-7.27	-0.18
360	SLU 67	-229	-1104	9845	-641.77	-7.26	-0.18
360	SLU 68	-227	-1094	9776	-636.88	-7.22	-0.18
360	SLU 69	-237	-1118	9954	-649.43	-7.59	-0.19
360	SLU 70	-237	-1118	9956	-649.5	-7.59	-0.19
360	SLU 71	-235	-1108	9883	-644.49	-7.55	-0.19
360	SLU 72	-235	-1108	9885	-644.56	-7.55	-0.19
360	SLU 73	-241	-1189	10645	-692.19	-7.63	-0.2
360	SLU 74	-251	-1212	10823	-704.73	-8.01	-0.21
360	SLU 75	-251	-1212	10825	-704.81	-8	-0.21
360	SLU 76	-249	-1203	10756	-699.92	-7.96	-0.21
360	SLU 77	-259	-1226	10934	-712.46	-8.34	-0.21
360	SLU 78	-259	-1226	10936	-712.54	-8.33	-0.21
360	SLU 79	-257	-1217	10862	-707.52	-8.3	-0.21
360	SLU 80	-257	-1217	10865	-707.59	-8.29	-0.21
360	SLU 81	-250	-1235	11062	-719.07	-7.96	-0.21
360	SLU 82	-250	-1235	11064	-719.15	-7.96	-0.21
360	SLU 83	-258	-1249	11172	-726.8	-8.29	-0.21
360	SLU 84	-258	-1249	11174	-726.88	-8.28	-0.21
360	SLE RA 1	-164	-808	7231	-470.73	-5.14	-0.13
360	SLE RA 2	-163	-808	7234	-470.82	-5.13	-0.13
360	SLE RA 3	-170	-824	7352	-479.18	-5.38	-0.14
360	SLE RA 4	-170	-824	7354	-479.23	-5.38	-0.14
360	SLE RA 5	-169	-817	7308	-475.97	-5.35	-0.14
360	SLE RA 6	-176	-833	7426	-484.33	-5.6	-0.14
360	SLE RA 7	-175	-833	7428	-484.39	-5.6	-0.14
360	SLE RA 8	-174	-827	7379	-481.04	-5.57	-0.14
360	SLE RA 9	-174	-827	7380	-481.09	-5.57	-0.14
360	SLE RA 10	-178	-880	7887	-512.84	-5.63	-0.15
360	SLE RA 11	-185	-896	8006	-521.2	-5.88	-0.15
360	SLE RA 12	-185	-896	8007	-521.25	-5.87	-0.15
360	SLE RA 13	-183	-889	7961	-517.99	-5.85	-0.15
360	SLE RA 14	-190	-905	8079	-526.35	-6.09	-0.15
360	SLE RA 15	-190	-905	8081	-526.41	-6.09	-0.15
360	SLE RA 16	-189	-899	8032	-523.06	-6.07	-0.15
360	SLE RA 17	-189	-899	8033	-523.11	-6.07	-0.15
360	SLE RA 18	-184	-911	8165	-530.76	-5.84	-0.15
360	SLE RA 19	-184	-911	8166	-530.81	-5.84	-0.15
360	SLE RA 20	-190	-921	8238	-535.92	-6.06	-0.16
360	SLE RA 21	-190	-921	8240	-535.97	-6.06	-0.16
360	SLE FR 1	-164	-808	7231	-470.73	-5.14	-0.13
360	SLE FR 2	-164	-808	7232	-470.75	-5.14	-0.13
360	SLE FR 3	-166	-812	7261	-472.79	-5.22	-0.13
360	SLE FR 4	-170	-839	7512	-488.76	-5.35	-0.14
360	SLE FR 5	-172	-843	7541	-490.8	-5.44	-0.14
360	SLE FR 6	-174	-860	7698	-500.75	-5.49	-0.14

Nodo	Cont.	Reazione a traslazione			Reazione a rotazione		
Ind.	N.br.	x	y	z	x	y	z
360	SLE QP 1	-164	-808	7231	-470.73	-5.14	-0.13
360	SLE QP 2	-170	-839	7511	-488.74	-5.35	-0.14
360	SLD 1	413	-514	6210	-391.2	22.81	0
360	SLD 2	413	-514	6210	-391.2	22.81	0
360	SLD 3	460	-965	7709	-507.02	25.09	0.16
360	SLD 4	460	-965	7709	-507.02	25.09	0.16
360	SLD 5	-65	-57	4848	-283.81	-0.37	-0.34
360	SLD 6	-65	-57	4848	-283.81	-0.37	-0.34
360	SLD 7	89	-1561	9844	-669.89	7.25	0.19
360	SLD 8	89	-1561	9844	-669.89	7.25	0.19
360	SLD 9	-429	-117	5179	-307.59	-17.95	-0.47
360	SLD 10	-429	-117	5179	-307.59	-17.95	-0.47
360	SLD 11	-275	-1621	10175	-693.67	-10.33	0.07
360	SLD 12	-275	-1621	10175	-693.67	-10.33	0.07
360	SLD 13	-799	-713	7314	-470.46	-35.79	-0.43
360	SLD 14	-799	-713	7314	-470.46	-35.79	-0.43
360	SLD 15	-753	-1164	8813	-586.28	-33.51	-0.27
360	SLD 16	-753	-1164	8813	-586.28	-33.51	-0.27
360	SLV 1	1187	-62	4420	-256.61	60.16	0.17
360	SLV 2	1187	-62	4420	-256.61	60.16	0.17
360	SLV 3	1300	-1146	8012	-534.68	65.71	0.56
360	SLV 4	1300	-1146	8012	-534.68	65.71	0.56
360	SLV 5	66	1038	1136	2.62	5.89	-0.64
360	SLV 6	66	1038	1136	2.62	5.89	-0.64
360	SLV 7	442	-2575	13110	-924.25	24.38	0.67
360	SLV 8	442	-2575	13110	-924.25	24.38	0.67
360	SLV 9	-782	897	1913	-53.24	-35.08	-0.94
360	SLV 10	-782	897	1913	-53.24	-35.08	-0.94
360	SLV 11	-405	-2716	13887	-980.11	-16.59	0.37
360	SLV 12	-405	-2716	13887	-980.11	-16.59	0.37
360	SLV 13	-1639	-532	7011	-442.81	-76.41	-0.84
360	SLV 14	-1639	-532	7011	-442.81	-76.41	-0.84
360	SLV 15	-1526	-1616	10603	-720.87	-70.86	-0.44
360	SLV 16	-1526	-1616	10603	-720.87	-70.86	-0.44
361	SLU 1	-457	-15	4614	0.25	-22.24	0.01
361	SLU 2	-457	-15	4617	0.24	-22.24	0.01
361	SLU 3	-477	-15	4728	0.24	-23.21	0.01
361	SLU 4	-477	-15	4730	0.24	-23.22	0.01
361	SLU 5	-471	-15	4687	0.24	-22.94	0.01
361	SLU 6	-491	-16	4798	0.24	-23.91	0.01
361	SLU 7	-491	-16	4800	0.24	-23.92	0.01
361	SLU 8	-485	-16	4753	0.24	-23.63	0.01
361	SLU 9	-485	-16	4755	0.24	-23.64	0.01
361	SLU 10	-522	-17	5277	0.3	-25.41	0.01
361	SLU 11	-542	-18	5388	0.31	-26.38	0.01
361	SLU 12	-542	-18	5390	0.3	-26.39	0.01
361	SLU 13	-536	-17	5346	0.3	-26.11	0.01
361	SLU 14	-556	-18	5457	0.3	-27.08	0.01
361	SLU 15	-556	-18	5459	0.3	-27.09	0.01
361	SLU 16	-550	-18	5413	0.31	-26.8	0.01
361	SLU 17	-550	-18	5414	0.3	-26.81	0.01
361	SLU 18	-549	-18	5556	0.34	-26.76	0.01
361	SLU 19	-549	-18	5558	0.33	-26.77	0.01
361	SLU 20	-564	-18	5626	0.33	-27.46	0.01
361	SLU 21	-564	-18	5628	0.33	-27.47	0.01
361	SLU 22	-522	-17	5220	0.29	-25.44	0.01
361	SLU 23	-522	-17	5223	0.29	-25.44	0.01
361	SLU 24	-542	-17	5334	0.29	-26.41	0.01
361	SLU 25	-542	-17	5336	0.28	-26.42	0.01
361	SLU 26	-537	-17	5293	0.28	-26.14	0.01
361	SLU 27	-557	-18	5403	0.29	-27.11	0.01
361	SLU 28	-557	-18	5405	0.28	-27.12	0.01
361	SLU 29	-551	-18	5359	0.29	-26.84	0.01
361	SLU 30	-551	-18	5361	0.28	-26.84	0.01
361	SLU 31	-587	-19	5882	0.35	-28.61	0.01
361	SLU 32	-607	-20	5993	0.35	-29.58	0.01
361	SLU 33	-607	-20	5995	0.35	-29.59	0.01
361	SLU 34	-602	-19	5952	0.35	-29.31	0.01
361	SLU 35	-621	-20	6063	0.35	-30.28	0.01
361	SLU 36	-622	-20	6065	0.35	-30.29	0.01
361	SLU 37	-616	-20	6018	0.35	-30	0.01
361	SLU 38	-616	-20	6020	0.35	-30.01	0.01
361	SLU 39	-615	-20	6162	0.38	-29.96	0.01
361	SLU 40	-615	-20	6164	0.38	-29.97	0.01
361	SLU 41	-629	-20	6231	0.38	-30.66	0.01
361	SLU 42	-629	-20	6233	0.38	-30.67	0.01
361	SLU 43	-571	-19	5790	0.3	-27.81	0.01
361	SLU 44	-571	-19	5794	0.3	-27.82	0.01
361	SLU 45	-591	-19	5905	0.3	-28.79	0.01
361	SLU 46	-591	-19	5907	0.3	-28.79	0.01
361	SLU 47	-586	-19	5863	0.3	-28.52	0.01
361	SLU 48	-606	-19	5974	0.3	-29.49	0.01
361	SLU 49	-606	-19	5976	0.3	-29.49	0.01
361	SLU 50	-600	-19	5930	0.3	-29.21	0.01
361	SLU 51	-600	-19	5932	0.3	-29.21	0.01
361	SLU 52	-636	-21	6453	0.36	-30.98	0.01
361	SLU 53	-656	-21	6564	0.36	-31.95	0.01
361	SLU 54	-656	-21	6566	0.36	-31.96	0.01
361	SLU 55	-651	-21	6523	0.36	-31.68	0.01
361	SLU 56	-670	-22	6634	0.36	-32.65	0.01

Nodo	Cont.	Reazione a traslazione			Reazione a rotazione		
Ind.	N.br.	x	y	z	x	y	z
361	SLU 57	-671	-22	6636	0.36	-32.66	0.01
361	SLU 58	-665	-21	6589	0.36	-32.38	0.01
361	SLU 59	-665	-21	6591	0.36	-32.38	0.01
361	SLU 60	-664	-22	6732	0.4	-32.33	0.01
361	SLU 61	-664	-22	6734	0.39	-32.34	0.01
361	SLU 62	-678	-22	6802	0.39	-33.03	0.01
361	SLU 63	-678	-22	6804	0.39	-33.04	0.01
361	SLU 64	-637	-21	6396	0.35	-31.01	0.01
361	SLU 65	-637	-21	6399	0.34	-31.02	0.01
361	SLU 66	-657	-21	6510	0.35	-31.99	0.01
361	SLU 67	-657	-21	6512	0.34	-31.99	0.01
361	SLU 68	-651	-21	6469	0.34	-31.72	0.01
361	SLU 69	-671	-22	6580	0.34	-32.69	0.01
361	SLU 70	-671	-22	6582	0.34	-32.69	0.01
361	SLU 71	-665	-21	6535	0.34	-32.41	0.01
361	SLU 72	-666	-21	6537	0.34	-32.41	0.01
361	SLU 73	-702	-23	7059	0.41	-34.19	0.01
361	SLU 74	-722	-23	7170	0.41	-35.16	0.01
361	SLU 75	-722	-23	7172	0.41	-35.16	0.01
361	SLU 76	-716	-23	7128	0.41	-34.89	0.01
361	SLU 77	-736	-24	7239	0.41	-35.86	0.01
361	SLU 78	-736	-24	7241	0.4	-35.86	0.01
361	SLU 79	-730	-23	7195	0.41	-35.58	0.01
361	SLU 80	-730	-23	7197	0.41	-35.58	0.01
361	SLU 81	-729	-24	7338	0.44	-35.54	0.01
361	SLU 82	-730	-24	7340	0.44	-35.54	0.01
361	SLU 83	-744	-24	7408	0.44	-36.24	0.01
361	SLU 84	-744	-24	7410	0.44	-36.24	0.01
361	SLE RA 1	-475	-16	4787	0.26	-23.15	0.01
361	SLE RA 2	-475	-16	4789	0.26	-23.15	0.01
361	SLE RA 3	-489	-16	4863	0.26	-23.8	0.01
361	SLE RA 4	-489	-16	4864	0.25	-23.8	0.01
361	SLE RA 5	-485	-16	4836	0.25	-23.62	0.01
361	SLE RA 6	-498	-16	4910	0.26	-24.27	0.01
361	SLE RA 7	-498	-16	4911	0.25	-24.27	0.01
361	SLE RA 8	-495	-16	4880	0.26	-24.08	0.01
361	SLE RA 9	-495	-16	4881	0.25	-24.09	0.01
361	SLE RA 10	-519	-17	5229	0.3	-25.27	0.01
361	SLE RA 11	-532	-17	5303	0.3	-25.91	0.01
361	SLE RA 12	-532	-17	5304	0.3	-25.92	0.01
361	SLE RA 13	-528	-17	5275	0.3	-25.73	0.01
361	SLE RA 14	-542	-17	5349	0.3	-26.38	0.01
361	SLE RA 15	-542	-17	5350	0.3	-26.38	0.01
361	SLE RA 16	-538	-17	5319	0.3	-26.2	0.01
361	SLE RA 17	-538	-17	5321	0.3	-26.2	0.01
361	SLE RA 18	-537	-18	5415	0.32	-26.17	0.01
361	SLE RA 19	-537	-18	5416	0.32	-26.17	0.01
361	SLE RA 20	-547	-18	5461	0.32	-26.63	0.01
361	SLE RA 21	-547	-18	5463	0.32	-26.64	0.01
361	SLE FR 1	-475	-16	4787	0.26	-23.15	0.01
361	SLE FR 2	-475	-16	4787	0.26	-23.15	0.01
361	SLE FR 3	-479	-16	4806	0.26	-23.34	0.01
361	SLE FR 4	-494	-16	4976	0.28	-24.06	0.01
361	SLE FR 5	-498	-16	4994	0.28	-24.24	0.01
361	SLE FR 6	-506	-17	5101	0.29	-24.66	0.01
361	SLE QP 1	-475	-16	4787	0.26	-23.15	0.01
361	SLE QP 2	-494	-16	4975	0.28	-24.06	0.01
361	SLD 1	194	-8	4215	-3.05	8.47	0.01
361	SLD 2	194	-8	4215	-3.05	8.47	0.01
361	SLD 3	65	-17	4973	-0.44	3.02	0.03
361	SLD 4	65	-17	4973	-0.44	3.02	0.03
361	SLD 5	-92	-1	3598	-4.68	-6.02	-0.01
361	SLD 6	-92	-1	3598	-4.68	-6.02	-0.01
361	SLD 7	-522	-29	6124	4.02	-24.21	0.03
361	SLD 8	-522	-29	6124	4.02	-24.21	0.03
361	SLD 9	-466	-3	3827	-3.47	-23.9	-0.02
361	SLD 10	-466	-3	3827	-3.47	-23.9	-0.02
361	SLD 11	-896	-31	6353	5.23	-42.09	0.03
361	SLD 12	-896	-31	6353	5.23	-42.09	0.03
361	SLD 13	-1053	-15	4978	0.99	-51.13	-0.01
361	SLD 14	-1053	-15	4978	0.99	-51.13	-0.01
361	SLD 15	-1182	-24	5736	3.6	-56.58	0
361	SLD 16	-1182	-24	5736	3.6	-56.58	0
361	SLV 1	1114	2	3175	-7.69	51.97	0.02
361	SLV 2	1114	2	3175	-7.69	51.97	0.02
361	SLV 3	805	-18	4989	-1.22	38.87	0.05
361	SLV 4	805	-18	4989	-1.22	38.87	0.05
361	SLV 5	457	19	1684	-11.93	18.63	-0.04
361	SLV 6	457	19	1684	-11.93	18.63	-0.04
361	SLV 7	-573	-47	7731	9.64	-25.05	0.07
361	SLV 8	-573	-47	7731	9.64	-25.05	0.07
361	SLV 9	-415	14	2220	-9.09	-23.06	-0.06
361	SLV 10	-415	14	2220	-9.09	-23.06	-0.06
361	SLV 11	-1445	-52	8267	12.48	-66.74	0.05
361	SLV 12	-1445	-52	8267	12.48	-66.74	0.05
361	SLV 13	-1793	-14	4962	1.77	-86.98	-0.04
361	SLV 14	-1793	-14	4962	1.77	-86.98	-0.04
361	SLV 15	-2102	-34	6776	8.24	-100.08	-0.01
361	SLV 16	-2102	-34	6776	8.24	-100.08	-0.01
362	SLU 1	-591	0	4335	-5.88	-23.73	0.01

Nodo	Cont.	Reazione a traslazione			Reazione a rotazione		
Ind.	N.br.	x	y	z	x	y	z
362	SLU 2	-591	0	4338	-5.9	-23.74	0.01
362	SLU 3	-615	0	4439	-6.1	-24.71	0.01
362	SLU 4	-615	0	4441	-6.11	-24.72	0.01
362	SLU 5	-608	0	4402	-6.03	-24.44	0.01
362	SLU 6	-632	0	4503	-6.23	-25.41	0.01
362	SLU 7	-632	0	4505	-6.24	-25.42	0.01
362	SLU 8	-625	0	4463	-6.14	-25.13	0.01
362	SLU 9	-625	0	4464	-6.15	-25.14	0.01
362	SLU 10	-679	0	4964	-6.65	-27.38	0.01
362	SLU 11	-703	0	5065	-6.86	-28.35	0.02
362	SLU 12	-703	0	5067	-6.86	-28.36	0.02
362	SLU 13	-696	0	5028	-6.78	-28.08	0.01
362	SLU 14	-720	0	5129	-6.98	-29.05	0.02
362	SLU 15	-720	0	5131	-6.99	-29.06	0.02
362	SLU 16	-713	0	5089	-6.9	-28.77	0.02
362	SLU 17	-713	0	5090	-6.91	-28.78	0.02
362	SLU 18	-717	0	5229	-6.96	-28.93	0.02
362	SLU 19	-717	0	5231	-6.97	-28.94	0.02
362	SLU 20	-734	0	5293	-7.09	-29.63	0.02
362	SLU 21	-734	0	5295	-7.1	-29.64	0.02
362	SLU 22	-678	0	4905	-6.67	-27.28	0.01
362	SLU 23	-678	0	4909	-6.68	-27.29	0.01
362	SLU 24	-702	0	5010	-6.88	-28.27	0.02
362	SLU 25	-702	0	5012	-6.89	-28.27	0.02
362	SLU 26	-695	0	4973	-6.81	-28	0.02
362	SLU 27	-719	0	5074	-7.01	-28.97	0.02
362	SLU 28	-719	0	5076	-7.02	-28.97	0.02
362	SLU 29	-712	0	5033	-6.92	-28.69	0.02
362	SLU 30	-712	0	5035	-6.93	-28.69	0.02
362	SLU 31	-766	0	5535	-7.43	-30.93	0.02
362	SLU 32	-790	0	5636	-7.64	-31.91	0.02
362	SLU 33	-790	0	5638	-7.64	-31.91	0.02
362	SLU 34	-783	0	5599	-7.56	-31.64	0.02
362	SLU 35	-807	0	5700	-7.77	-32.61	0.02
362	SLU 36	-807	0	5702	-7.77	-32.61	0.02
362	SLU 37	-800	0	5659	-7.68	-32.33	0.02
362	SLU 38	-800	0	5661	-7.69	-32.33	0.02
362	SLU 39	-804	0	5800	-7.75	-32.48	0.02
362	SLU 40	-804	0	5802	-7.75	-32.49	0.02
362	SLU 41	-821	0	5864	-7.88	-33.19	0.02
362	SLU 42	-821	0	5866	-7.88	-33.19	0.02
362	SLU 43	-738	0	5439	-7.38	-29.63	0.02
362	SLU 44	-738	0	5443	-7.39	-29.64	0.02
362	SLU 45	-762	0	5544	-7.6	-30.61	0.02
362	SLU 46	-762	0	5546	-7.6	-30.62	0.02
362	SLU 47	-755	0	5507	-7.52	-30.34	0.02
362	SLU 48	-779	0	5608	-7.73	-31.31	0.02
362	SLU 49	-779	0	5610	-7.73	-31.32	0.02
362	SLU 50	-772	0	5567	-7.64	-31.03	0.02
362	SLU 51	-772	0	5569	-7.65	-31.04	0.02
362	SLU 52	-827	0	6069	-8.15	-33.28	0.02
362	SLU 53	-851	0	6170	-8.35	-34.25	0.02
362	SLU 54	-851	0	6172	-8.36	-34.26	0.02
362	SLU 55	-844	0	6133	-8.28	-33.98	0.02
362	SLU 56	-868	0	6234	-8.48	-34.95	0.02
362	SLU 57	-868	0	6236	-8.49	-34.96	0.02
362	SLU 58	-860	0	6193	-8.4	-34.67	0.02
362	SLU 59	-860	0	6195	-8.4	-34.68	0.02
362	SLU 60	-864	0	6334	-8.46	-34.83	0.02
362	SLU 61	-864	0	6336	-8.47	-34.84	0.02
362	SLU 62	-881	0	6398	-8.59	-35.53	0.02
362	SLU 63	-881	0	6400	-8.6	-35.54	0.02
362	SLU 64	-825	0	6010	-8.16	-33.18	0.02
362	SLU 65	-825	0	6013	-8.18	-33.19	0.02
362	SLU 66	-849	0	6115	-8.38	-34.17	0.02
362	SLU 67	-849	0	6117	-8.39	-34.17	0.02
362	SLU 68	-842	0	6077	-8.3	-33.9	0.02
362	SLU 69	-866	0	6179	-8.51	-34.87	0.02
362	SLU 70	-866	0	6181	-8.52	-34.87	0.02
362	SLU 71	-859	0	6138	-8.42	-34.59	0.02
362	SLU 72	-859	0	6140	-8.43	-34.59	0.02
362	SLU 73	-914	0	6639	-8.93	-36.83	0.02
362	SLU 74	-938	0	6741	-9.13	-37.81	0.02
362	SLU 75	-938	0	6743	-9.14	-37.81	0.02
362	SLU 76	-931	0	6703	-9.06	-37.54	0.02
362	SLU 77	-955	0	6805	-9.26	-38.51	0.02
362	SLU 78	-955	0	6807	-9.27	-38.51	0.02
362	SLU 79	-947	0	6764	-9.18	-38.23	0.02
362	SLU 80	-947	0	6766	-9.19	-38.23	0.02
362	SLU 81	-951	0	6904	-9.24	-38.38	0.02
362	SLU 82	-951	0	6906	-9.25	-38.39	0.02
362	SLU 83	-968	0	6968	-9.37	-39.09	0.02
362	SLU 84	-968	0	6970	-9.38	-39.09	0.02
362	SLE RA 1	-616	0	4498	-6.11	-24.74	0.01
362	SLE RA 2	-616	0	4500	-6.12	-24.75	0.01
362	SLE RA 3	-632	0	4568	-6.25	-25.4	0.01
362	SLE RA 4	-632	0	4569	-6.26	-25.4	0.01
362	SLE RA 5	-627	0	4543	-6.2	-25.22	0.01
362	SLE RA 6	-643	0	4610	-6.34	-25.87	0.01
362	SLE RA 7	-643	0	4611	-6.34	-25.87	0.01

Nodo	Cont.	Reazione a traslazione			Reazione a rotazione		
Ind.	N.br.	x	y	z	x	y	z
362	SLE RA 8	-638	0	4583	-6.28	-25.68	0.01
362	SLE RA 9	-638	0	4584	-6.28	-25.68	0.01
362	SLE RA 10	-675	0	4917	-6.62	-27.18	0.01
362	SLE RA 11	-691	0	4985	-6.76	-27.83	0.01
362	SLE RA 12	-691	0	4986	-6.76	-27.83	0.01
362	SLE RA 13	-686	0	4960	-6.71	-27.65	0.01
362	SLE RA 14	-702	0	5027	-6.84	-28.29	0.02
362	SLE RA 15	-702	0	5029	-6.85	-28.3	0.02
362	SLE RA 16	-697	0	5000	-6.78	-28.11	0.01
362	SLE RA 17	-697	0	5002	-6.79	-28.11	0.01
362	SLE RA 18	-700	0	5094	-6.83	-28.21	0.01
362	SLE RA 19	-700	0	5095	-6.83	-28.22	0.01
362	SLE RA 20	-711	0	5137	-6.91	-28.68	0.02
362	SLE RA 21	-711	0	5138	-6.92	-28.68	0.02
362	SLE FR 1	-616	0	4498	-6.11	-24.74	0.01
362	SLE FR 2	-616	0	4498	-6.11	-24.75	0.01
362	SLE FR 3	-620	0	4515	-6.14	-24.93	0.01
362	SLE FR 4	-641	0	4677	-6.33	-25.79	0.01
362	SLE FR 5	-645	0	4694	-6.36	-25.97	0.01
362	SLE FR 6	-658	0	4796	-6.47	-26.48	0.01
362	SLE QP 1	-616	0	4498	-6.11	-24.74	0.01
362	SLE QP 2	-641	0	4677	-6.32	-25.78	0.01
362	SLD 1	71	-3	3969	-4.7	6.94	0.04
362	SLD 2	71	-3	3969	-4.7	6.94	0.04
362	SLD 3	-77	-9	4583	0.28	1	0.02
362	SLD 4	-77	-9	4583	0.28	1	0.02
362	SLD 5	-203	8	3532	-13.39	-6.95	0.06
362	SLD 6	-203	8	3532	-13.39	-6.95	0.06
362	SLD 7	-696	-11	5581	3.21	-26.76	-0.02
362	SLD 8	-696	-11	5581	3.21	-26.76	-0.02
362	SLD 9	-585	11	3772	-15.86	-24.81	0.05
362	SLD 10	-585	11	3772	-15.86	-24.81	0.05
362	SLD 11	-1078	-7	5821	0.74	-44.62	-0.03
362	SLD 12	-1078	-7	5821	0.74	-44.62	-0.03
362	SLD 13	-1204	9	4770	-12.93	-52.57	0.01
362	SLD 14	-1204	9	4770	-12.93	-52.57	0.01
362	SLD 15	-1352	3	5385	-7.95	-58.51	-0.02
362	SLD 16	-1352	3	5385	-7.95	-58.51	-0.02
362	SLV 1	1022	-7	3002	-2.84	50.69	0.09
362	SLV 2	1022	-7	3002	-2.84	50.69	0.09
362	SLV 3	669	-21	4475	9.48	36.51	0.03
362	SLV 4	669	-21	4475	9.48	36.51	0.03
362	SLV 5	394	18	1941	-23.96	18.66	0.13
362	SLV 6	394	18	1941	-23.96	18.66	0.13
362	SLV 7	-784	-26	6849	17.1	-28.6	-0.07
362	SLV 8	-784	-26	6849	17.1	-28.6	-0.07
362	SLV 9	-498	26	2504	-29.75	-22.97	0.1
362	SLV 10	-498	26	2504	-29.75	-22.97	0.1
362	SLV 11	-1676	-18	7412	11.32	-70.23	-0.1
362	SLV 12	-1676	-18	7412	11.32	-70.23	-0.1
362	SLV 13	-1950	21	4878	-22.13	-88.08	0
362	SLV 14	-1950	21	4878	-22.13	-88.08	0
362	SLV 15	-2304	7	6351	-9.81	-102.26	-0.06
362	SLV 16	-2304	7	6351	-9.81	-102.26	-0.06
363	SLU 1	-760	12	4005	-12.42	-34.77	0.05
363	SLU 2	-761	12	4008	-12.44	-34.79	0.05
363	SLU 3	-790	13	4099	-12.86	-36.16	0.05
363	SLU 4	-790	13	4101	-12.87	-36.17	0.05
363	SLU 5	-781	12	4065	-12.71	-35.75	0.05
363	SLU 6	-811	13	4156	-13.13	-37.12	0.05
363	SLU 7	-811	13	4158	-13.14	-37.13	0.05
363	SLU 8	-802	13	4119	-12.95	-36.69	0.05
363	SLU 9	-802	13	4121	-12.96	-36.7	0.05
363	SLU 10	-877	14	4590	-14.06	-40.07	0.05
363	SLU 11	-907	14	4681	-14.49	-41.44	0.06
363	SLU 12	-907	14	4683	-14.5	-41.46	0.06
363	SLU 13	-898	14	4647	-14.33	-41.03	0.06
363	SLU 14	-927	15	4738	-14.76	-42.4	0.06
363	SLU 15	-928	15	4740	-14.77	-42.42	0.06
363	SLU 16	-918	14	4701	-14.58	-41.98	0.06
363	SLU 17	-918	14	4703	-14.59	-41.99	0.06
363	SLU 18	-927	14	4837	-14.74	-42.32	0.06
363	SLU 19	-927	15	4839	-14.75	-42.33	0.06
363	SLU 20	-947	15	4894	-15.01	-43.28	0.06
363	SLU 21	-948	15	4896	-15.02	-43.29	0.06
363	SLU 22	-874	14	4532	-14.08	-39.94	0.05
363	SLU 23	-874	14	4535	-14.1	-39.96	0.05
363	SLU 24	-904	14	4625	-14.53	-41.33	0.06
363	SLU 25	-904	14	4627	-14.54	-41.34	0.06
363	SLU 26	-895	14	4592	-14.37	-40.92	0.06
363	SLU 27	-924	15	4682	-14.79	-42.29	0.06
363	SLU 28	-925	15	4684	-14.81	-42.3	0.06
363	SLU 29	-915	14	4646	-14.62	-41.86	0.06
363	SLU 30	-915	14	4648	-14.63	-41.88	0.06
363	SLU 31	-991	15	5117	-15.73	-45.25	0.06
363	SLU 32	-1020	16	5207	-16.15	-46.62	0.06
363	SLU 33	-1020	16	5209	-16.17	-46.63	0.06
363	SLU 34	-1011	16	5174	-16	-46.21	0.06
363	SLU 35	-1041	16	5264	-16.42	-47.58	0.06
363	SLU 36	-1041	16	5266	-16.43	-47.59	0.06

Nodo	Cont.	Reazione a traslazione			Reazione a rotazione		
Ind.	N.br.	x	y	z	x	y	z
363	SLU 37	-1032	16	5228	-16.24	-47.15	0.06
363	SLU 38	-1032	16	5230	-16.25	-47.16	0.06
363	SLU 39	-1040	16	5363	-16.41	-47.49	0.06
363	SLU 40	-1040	16	5365	-16.42	-47.5	0.06
363	SLU 41	-1061	16	5420	-16.67	-48.45	0.06
363	SLU 42	-1061	16	5422	-16.68	-48.46	0.06
363	SLU 43	-949	15	5026	-15.57	-43.43	0.06
363	SLU 44	-950	15	5029	-15.59	-43.45	0.06
363	SLU 45	-979	16	5120	-16.02	-44.82	0.06
363	SLU 46	-980	16	5122	-16.03	-44.83	0.06
363	SLU 47	-971	16	5087	-15.86	-44.41	0.06
363	SLU 48	-1000	16	5177	-16.28	-45.78	0.06
363	SLU 49	-1000	16	5179	-16.3	-45.79	0.06
363	SLU 50	-991	16	5141	-16.11	-45.35	0.06
363	SLU 51	-991	16	5142	-16.12	-45.36	0.06
363	SLU 52	-1066	17	5612	-17.22	-48.73	0.07
363	SLU 53	-1096	17	5702	-17.64	-50.1	0.07
363	SLU 54	-1096	17	5704	-17.66	-50.11	0.07
363	SLU 55	-1087	17	5669	-17.49	-49.69	0.07
363	SLU 56	-1116	18	5759	-17.91	-51.06	0.07
363	SLU 57	-1117	18	5761	-17.92	-51.07	0.07
363	SLU 58	-1107	17	5723	-17.73	-50.63	0.07
363	SLU 59	-1107	17	5724	-17.74	-50.65	0.07
363	SLU 60	-1116	18	5858	-17.9	-50.98	0.07
363	SLU 61	-1116	18	5860	-17.91	-50.99	0.07
363	SLU 62	-1136	18	5915	-18.16	-51.94	0.07
363	SLU 63	-1137	18	5917	-18.17	-51.95	0.07
363	SLU 64	-1063	17	5553	-17.24	-48.6	0.07
363	SLU 65	-1063	17	5556	-17.26	-48.62	0.07
363	SLU 66	-1093	17	5646	-17.68	-49.99	0.07
363	SLU 67	-1093	17	5648	-17.69	-50	0.07
363	SLU 68	-1084	17	5613	-17.52	-49.58	0.07
363	SLU 69	-1113	18	5703	-17.95	-50.95	0.07
363	SLU 70	-1114	18	5705	-17.96	-50.96	0.07
363	SLU 71	-1104	17	5667	-17.77	-50.52	0.07
363	SLU 72	-1104	17	5669	-17.78	-50.53	0.07
363	SLU 73	-1180	19	6138	-18.88	-53.9	0.07
363	SLU 74	-1209	19	6228	-19.31	-55.27	0.07
363	SLU 75	-1209	19	6230	-19.32	-55.29	0.07
363	SLU 76	-1200	19	6195	-19.15	-54.87	0.07
363	SLU 77	-1230	19	6285	-19.57	-56.23	0.08
363	SLU 78	-1230	19	6287	-19.59	-56.25	0.08
363	SLU 79	-1221	19	6249	-19.4	-55.81	0.07
363	SLU 80	-1221	19	6251	-19.41	-55.82	0.07
363	SLU 81	-1229	19	6384	-19.56	-56.15	0.08
363	SLU 82	-1229	19	6386	-19.57	-56.16	0.08
363	SLU 83	-1250	19	6441	-19.83	-57.11	0.08
363	SLU 84	-1250	20	6443	-19.84	-57.12	0.08
363	SLE RA 1	-793	13	4156	-12.89	-36.25	0.05
363	SLE RA 2	-793	13	4158	-12.91	-36.26	0.05
363	SLE RA 3	-813	13	4218	-13.19	-37.17	0.05
363	SLE RA 4	-813	13	4219	-13.2	-37.18	0.05
363	SLE RA 5	-807	13	4196	-13.08	-36.9	0.05
363	SLE RA 6	-826	13	4256	-13.37	-37.81	0.05
363	SLE RA 7	-827	13	4257	-13.38	-37.82	0.05
363	SLE RA 8	-820	13	4232	-13.25	-37.53	0.05
363	SLE RA 9	-820	13	4233	-13.26	-37.54	0.05
363	SLE RA 10	-871	14	4546	-13.99	-39.78	0.05
363	SLE RA 11	-890	14	4606	-14.27	-40.7	0.06
363	SLE RA 12	-890	14	4607	-14.28	-40.7	0.06
363	SLE RA 13	-884	14	4584	-14.17	-40.42	0.05
363	SLE RA 14	-904	14	4644	-14.45	-41.34	0.06
363	SLE RA 15	-904	14	4645	-14.46	-41.35	0.06
363	SLE RA 16	-898	14	4620	-14.33	-41.05	0.06
363	SLE RA 17	-898	14	4621	-14.34	-41.06	0.06
363	SLE RA 18	-904	14	4710	-14.44	-41.28	0.06
363	SLE RA 19	-904	14	4711	-14.45	-41.29	0.06
363	SLE RA 20	-917	14	4748	-14.62	-41.92	0.06
363	SLE RA 21	-918	14	4749	-14.63	-41.93	0.06
363	SLE FR 1	-793	13	4156	-12.89	-36.25	0.05
363	SLE FR 2	-793	13	4156	-12.9	-36.25	0.05
363	SLE FR 3	-798	13	4171	-12.96	-36.5	0.05
363	SLE FR 4	-826	13	4322	-13.36	-37.76	0.05
363	SLE FR 5	-831	13	4337	-13.43	-38.01	0.05
363	SLE FR 6	-848	13	4433	-13.67	-38.76	0.05
363	SLE QP 1	-793	13	4156	-12.89	-36.25	0.05
363	SLE QP 2	-826	13	4322	-13.36	-37.76	0.05
363	SLD 1	-83	2	3651	-3	-3.45	0.06
363	SLD 2	-83	2	3651	-3	-3.45	0.06
363	SLD 3	-247	8	4164	-12.42	-10.62	0.09
363	SLD 4	-247	8	4164	-12.42	-10.62	0.09
363	SLD 5	-354	0	3342	4.04	-16.6	0
363	SLD 6	-354	0	3342	4.04	-16.6	0
363	SLD 7	-902	21	5053	-27.36	-40.48	0.12
363	SLD 8	-902	21	5053	-27.36	-40.48	0.12
363	SLD 9	-750	5	3591	0.65	-35.03	-0.02
363	SLD 10	-750	5	3591	0.65	-35.03	-0.02
363	SLD 11	-1298	26	5301	-30.75	-58.92	0.11
363	SLD 12	-1298	26	5301	-30.75	-58.92	0.11
363	SLD 13	-1405	18	4480	-14.3	-64.9	0.01

Nodo	Cont.	Reazione a traslazione			Reazione a rotazione		
Ind.	N.br.	x	y	z	x	y	z
363	SLD 14	-1405	18	4480	-14.3	-64.9	0.01
363	SLD 15	-1569	24	4993	-23.72	-72.06	0.05
363	SLD 16	-1569	24	4993	-23.72	-72.06	0.05
363	SLV 1	911	-13	2737	11.4	42.46	0.06
363	SLV 2	911	-13	2737	11.4	42.46	0.06
363	SLV 3	519	2	3969	-11.61	25.31	0.15
363	SLV 4	519	2	3969	-11.61	25.31	0.15
363	SLV 5	291	-18	1979	28.97	12.32	-0.09
363	SLV 6	291	-18	1979	28.97	12.32	-0.09
363	SLV 7	-1018	33	6084	-47.73	-44.86	0.22
363	SLV 8	-1018	33	6084	-47.73	-44.86	0.22
363	SLV 9	-634	-6	2560	21.02	-30.66	-0.12
363	SLV 10	-634	-6	2560	21.02	-30.66	-0.12
363	SLV 11	-1943	44	6665	-55.68	-87.84	0.19
363	SLV 12	-1943	44	6665	-55.68	-87.84	0.19
363	SLV 13	-2170	24	4675	-15.1	-100.82	-0.05
363	SLV 14	-2170	24	4675	-15.1	-100.82	-0.05
363	SLV 15	-2563	40	5907	-38.11	-117.98	0.04
363	SLV 16	-2563	40	5907	-38.11	-117.98	0.04
364	SLU 1	-788	20	3628	-17.88	-32.33	0.06
364	SLU 2	-789	20	3631	-17.91	-32.35	0.06
364	SLU 3	-819	21	3708	-18.51	-33.58	0.07
364	SLU 4	-819	21	3710	-18.53	-33.59	0.07
364	SLU 5	-810	20	3680	-18.29	-33.22	0.07
364	SLU 6	-840	21	3757	-18.89	-34.45	0.07
364	SLU 7	-840	21	3759	-18.91	-34.46	0.07
364	SLU 8	-831	21	3726	-18.64	-34.08	0.07
364	SLU 9	-831	21	3728	-18.66	-34.09	0.07
364	SLU 10	-914	23	4159	-20.26	-37.59	0.07
364	SLU 11	-944	23	4236	-20.86	-38.82	0.07
364	SLU 12	-944	23	4238	-20.88	-38.83	0.07
364	SLU 13	-935	23	4208	-20.64	-38.46	0.07
364	SLU 14	-965	24	4286	-21.24	-39.69	0.08
364	SLU 15	-966	24	4287	-21.26	-39.71	0.08
364	SLU 16	-956	23	4254	-20.99	-39.32	0.08
364	SLU 17	-956	23	4256	-21.01	-39.33	0.08
364	SLU 18	-967	24	4382	-21.24	-39.82	0.08
364	SLU 19	-968	24	4384	-21.25	-39.83	0.08
364	SLU 20	-989	24	4431	-21.62	-40.69	0.08
364	SLU 21	-989	24	4433	-21.63	-40.7	0.08
364	SLU 22	-909	23	4101	-20.28	-37.33	0.07
364	SLU 23	-909	23	4104	-20.31	-37.34	0.07
364	SLU 24	-939	23	4182	-20.91	-38.57	0.07
364	SLU 25	-939	23	4183	-20.93	-38.59	0.07
364	SLU 26	-930	23	4153	-20.69	-38.22	0.07
364	SLU 27	-960	24	4231	-21.29	-39.45	0.08
364	SLU 28	-961	24	4232	-21.31	-39.46	0.08
364	SLU 29	-951	23	4199	-21.04	-39.07	0.08
364	SLU 30	-951	23	4201	-21.06	-39.08	0.08
364	SLU 31	-1035	25	4632	-22.66	-42.59	0.08
364	SLU 32	-1065	26	4710	-23.26	-43.82	0.08
364	SLU 33	-1065	26	4711	-23.28	-43.83	0.08
364	SLU 34	-1056	26	4681	-23.04	-43.46	0.08
364	SLU 35	-1086	26	4759	-23.64	-44.69	0.08
364	SLU 36	-1086	26	4760	-23.66	-44.7	0.08
364	SLU 37	-1076	26	4727	-23.39	-44.31	0.08
364	SLU 38	-1077	26	4729	-23.41	-44.32	0.08
364	SLU 39	-1088	26	4855	-23.64	-44.81	0.08
364	SLU 40	-1088	26	4857	-23.65	-44.82	0.08
364	SLU 41	-1109	27	4904	-24.02	-45.69	0.09
364	SLU 42	-1109	27	4906	-24.03	-45.7	0.09
364	SLU 43	-984	25	4554	-22.42	-40.32	0.08
364	SLU 44	-984	25	4557	-22.45	-40.34	0.08
364	SLU 45	-1014	26	4634	-23.06	-41.57	0.08
364	SLU 46	-1014	26	4636	-23.07	-41.58	0.08
364	SLU 47	-1005	25	4606	-22.83	-41.21	0.08
364	SLU 48	-1035	26	4684	-23.44	-42.44	0.08
364	SLU 49	-1035	26	4685	-23.45	-42.45	0.08
364	SLU 50	-1026	26	4652	-23.18	-42.06	0.08
364	SLU 51	-1026	26	4654	-23.2	-42.07	0.08
364	SLU 52	-1109	28	5085	-24.8	-45.58	0.09
364	SLU 53	-1139	28	5163	-25.41	-46.81	0.09
364	SLU 54	-1140	28	5164	-25.42	-46.82	0.09
364	SLU 55	-1131	28	5134	-25.18	-46.45	0.09
364	SLU 56	-1161	29	5212	-25.79	-47.68	0.09
364	SLU 57	-1161	29	5213	-25.8	-47.69	0.09
364	SLU 58	-1151	28	5180	-25.53	-47.31	0.09
364	SLU 59	-1151	28	5182	-25.55	-47.32	0.09
364	SLU 60	-1163	29	5308	-25.78	-47.81	0.09
364	SLU 61	-1163	29	5310	-25.8	-47.82	0.09
364	SLU 62	-1184	29	5357	-26.16	-48.68	0.09
364	SLU 63	-1184	29	5359	-26.17	-48.69	0.09
364	SLU 64	-1104	28	5027	-24.82	-45.31	0.09
364	SLU 65	-1104	28	5030	-24.85	-45.33	0.09
364	SLU 66	-1134	28	5108	-25.46	-46.56	0.09
364	SLU 67	-1135	28	5109	-25.47	-46.57	0.09
364	SLU 68	-1126	28	5079	-25.23	-46.2	0.09
364	SLU 69	-1156	29	5157	-25.84	-47.43	0.09
364	SLU 70	-1156	29	5158	-25.85	-47.44	0.09
364	SLU 71	-1146	28	5125	-25.58	-47.06	0.09

Nodo	Cont.	Reazione a traslazione			Reazione a rotazione		
Ind.	N.br.	x	y	z	x	y	z
364	SLU 72	-1146	29	5127	-25.6	-47.07	0.09
364	SLU 73	-1230	30	5558	-27.2	-50.57	0.1
364	SLU 74	-1260	31	5636	-27.8	-51.8	0.1
364	SLU 75	-1260	31	5637	-27.82	-51.81	0.1
364	SLU 76	-1251	31	5607	-27.58	-51.44	0.1
364	SLU 77	-1281	31	5685	-28.18	-52.68	0.1
364	SLU 78	-1281	31	5687	-28.2	-52.69	0.1
364	SLU 79	-1272	31	5653	-27.93	-52.3	0.1
364	SLU 80	-1272	31	5655	-27.95	-52.31	0.1
364	SLU 81	-1283	31	5781	-28.18	-52.8	0.1
364	SLU 82	-1283	31	5783	-28.19	-52.81	0.1
364	SLU 83	-1304	32	5830	-28.56	-53.67	0.1
364	SLU 84	-1304	32	5832	-28.57	-53.68	0.1
364	SLE RA 1	-823	21	3763	-18.57	-33.76	0.07
364	SLE RA 2	-823	21	3765	-18.59	-33.77	0.07
364	SLE RA 3	-843	21	3817	-18.99	-34.59	0.07
364	SLE RA 4	-843	21	3818	-19	-34.6	0.07
364	SLE RA 5	-837	21	3798	-18.84	-34.35	0.07
364	SLE RA 6	-857	21	3849	-19.24	-35.17	0.07
364	SLE RA 7	-857	21	3851	-19.25	-35.18	0.07
364	SLE RA 8	-851	21	3828	-19.07	-34.92	0.07
364	SLE RA 9	-851	21	3829	-19.08	-34.93	0.07
364	SLE RA 10	-907	22	4117	-20.15	-37.26	0.07
364	SLE RA 11	-927	23	4169	-20.55	-38.09	0.07
364	SLE RA 12	-927	23	4170	-20.57	-38.09	0.07
364	SLE RA 13	-921	23	4150	-20.4	-37.85	0.07
364	SLE RA 14	-941	23	4201	-20.81	-38.67	0.07
364	SLE RA 15	-941	23	4203	-20.82	-38.67	0.07
364	SLE RA 16	-934	23	4180	-20.64	-38.42	0.07
364	SLE RA 17	-935	23	4182	-20.65	-38.42	0.07
364	SLE RA 18	-942	23	4266	-20.8	-38.75	0.07
364	SLE RA 19	-942	23	4267	-20.81	-38.76	0.07
364	SLE RA 20	-956	23	4299	-21.06	-39.33	0.08
364	SLE RA 21	-956	23	4300	-21.07	-39.34	0.08
364	SLE FR 1	-823	21	3763	-18.57	-33.76	0.07
364	SLE FR 2	-823	21	3763	-18.57	-33.76	0.07
364	SLE FR 3	-828	21	3776	-18.67	-33.99	0.07
364	SLE FR 4	-859	21	3914	-19.24	-35.26	0.07
364	SLE FR 5	-864	22	3927	-19.34	-35.49	0.07
364	SLE FR 6	-882	22	4014	-19.68	-36.25	0.07
364	SLE QP 1	-823	21	3763	-18.57	-33.76	0.07
364	SLE QP 2	-859	21	3914	-19.24	-35.26	0.07
364	SLD 1	-110	7	3285	-5.81	-1.62	0.02
364	SLD 2	-110	7	3285	-5.81	-1.62	0.02
364	SLD 3	-268	19	3717	-19.99	-8.09	0.07
364	SLD 4	-268	19	3717	-19.99	-8.09	0.07
364	SLD 5	-394	-2	3070	6.29	-15.36	-0.02
364	SLD 6	-394	-2	3070	6.29	-15.36	-0.02
364	SLD 7	-921	39	4510	-40.96	-36.91	0.14
364	SLD 8	-921	39	4510	-40.96	-36.91	0.14
364	SLD 9	-796	4	3318	2.49	-33.61	-0.01
364	SLD 10	-796	4	3318	2.49	-33.61	-0.01
364	SLD 11	-1323	44	4758	-44.76	-55.15	0.16
364	SLD 12	-1323	44	4758	-44.76	-55.15	0.16
364	SLD 13	-1449	24	4111	-18.48	-62.43	0.07
364	SLD 14	-1449	24	4111	-18.48	-62.43	0.07
364	SLD 15	-1607	36	4543	-32.66	-68.89	0.12
364	SLD 16	-1607	36	4543	-32.66	-68.89	0.12
364	SLV 1	891	-14	2429	12.84	43.35	-0.05
364	SLV 2	891	-14	2429	12.84	43.35	-0.05
364	SLV 3	514	16	3467	-21.57	27.93	0.07
364	SLV 4	514	16	3467	-21.57	27.93	0.07
364	SLV 5	239	-34	1893	42.57	11.71	-0.15
364	SLV 6	239	-34	1893	42.57	11.71	-0.15
364	SLV 7	-1019	65	5355	-72.12	-39.69	0.25
364	SLV 8	-1019	65	5355	-72.12	-39.69	0.25
364	SLV 9	-698	-22	2472	33.64	-30.82	-0.11
364	SLV 10	-698	-22	2472	33.64	-30.82	-0.11
364	SLV 11	-1956	77	5935	-81.04	-82.22	0.28
364	SLV 12	-1956	77	5935	-81.04	-82.22	0.28
364	SLV 13	-2231	27	4360	-16.91	-98.44	0.06
364	SLV 14	-2231	27	4360	-16.91	-98.44	0.06
364	SLV 15	-2609	57	5399	-51.31	-113.86	0.18
364	SLV 16	-2609	57	5399	-51.31	-113.86	0.18
365	SLU 1	-793	24	3293	-21.84	-35.51	0.06
365	SLU 2	-794	24	3296	-21.88	-35.53	0.06
365	SLU 3	-824	24	3363	-22.61	-36.91	0.06
365	SLU 4	-825	24	3364	-22.63	-36.92	0.06
365	SLU 5	-815	24	3338	-22.33	-36.5	0.06
365	SLU 6	-846	25	3404	-23.07	-37.88	0.06
365	SLU 7	-846	25	3406	-23.09	-37.89	0.06
365	SLU 8	-836	25	3377	-22.75	-37.45	0.06
365	SLU 9	-837	25	3378	-22.78	-37.46	0.06
365	SLU 10	-921	27	3776	-24.75	-41.17	0.07
365	SLU 11	-952	27	3842	-25.48	-42.55	0.07
365	SLU 12	-952	27	3844	-25.51	-42.56	0.07
365	SLU 13	-943	27	3817	-25.21	-42.14	0.07
365	SLU 14	-973	28	3884	-25.94	-43.52	0.07
365	SLU 15	-973	28	3885	-25.96	-43.53	0.07
365	SLU 16	-964	28	3856	-25.63	-43.1	0.07

Nodo	Cont.	Reazione a traslazione			Reazione a rotazione		
Ind.	N.br.	x	y	z	x	y	z
365	SLU 17	-964	28	3858	-25.65	-43.11	0.07
365	SLU 18	-975	28	3978	-25.95	-43.57	0.07
365	SLU 19	-975	28	3980	-25.97	-43.58	0.07
365	SLU 20	-997	28	4020	-26.4	-44.54	0.07
365	SLU 21	-997	28	4022	-26.43	-44.55	0.07
365	SLU 22	-915	27	3719	-24.77	-40.94	0.07
365	SLU 23	-916	27	3722	-24.81	-40.96	0.07
365	SLU 24	-946	28	3788	-25.54	-42.34	0.07
365	SLU 25	-946	28	3790	-25.56	-42.35	0.07
365	SLU 26	-937	27	3763	-25.27	-41.93	0.07
365	SLU 27	-968	28	3830	-26	-43.31	0.07
365	SLU 28	-968	28	3831	-26.02	-43.32	0.07
365	SLU 29	-958	28	3802	-25.69	-42.88	0.07
365	SLU 30	-958	28	3804	-25.71	-42.89	0.07
365	SLU 31	-1043	30	4201	-27.68	-46.6	0.08
365	SLU 32	-1073	31	4268	-28.42	-47.98	0.08
365	SLU 33	-1074	31	4269	-28.44	-47.99	0.08
365	SLU 34	-1064	30	4243	-28.14	-47.57	0.08
365	SLU 35	-1095	31	4309	-28.87	-48.95	0.08
365	SLU 36	-1095	31	4311	-28.89	-48.96	0.08
365	SLU 37	-1085	31	4282	-28.56	-48.53	0.08
365	SLU 38	-1086	31	4283	-28.58	-48.54	0.08
365	SLU 39	-1097	31	4404	-28.88	-49	0.08
365	SLU 40	-1097	31	4406	-28.9	-49.01	0.08
365	SLU 41	-1119	32	4446	-29.33	-49.97	0.08
365	SLU 42	-1119	32	4447	-29.36	-49.99	0.08
365	SLU 43	-990	29	4136	-27.39	-44.3	0.08
365	SLU 44	-990	30	4138	-27.43	-44.32	0.08
365	SLU 45	-1021	30	4205	-28.16	-45.7	0.08
365	SLU 46	-1021	30	4206	-28.18	-45.71	0.08
365	SLU 47	-1012	30	4180	-27.88	-45.29	0.08
365	SLU 48	-1042	31	4246	-28.61	-46.67	0.08
365	SLU 49	-1042	31	4248	-28.64	-46.68	0.08
365	SLU 50	-1033	30	4219	-28.3	-46.24	0.08
365	SLU 51	-1033	31	4221	-28.32	-46.25	0.08
365	SLU 52	-1117	33	4618	-30.3	-49.96	0.08
365	SLU 53	-1148	33	4684	-31.03	-51.34	0.09
365	SLU 54	-1148	33	4686	-31.05	-51.35	0.09
365	SLU 55	-1139	33	4659	-30.76	-50.93	0.09
365	SLU 56	-1169	34	4726	-31.49	-52.31	0.09
365	SLU 57	-1169	34	4727	-31.51	-52.32	0.09
365	SLU 58	-1160	34	4699	-31.18	-51.89	0.09
365	SLU 59	-1160	34	4700	-31.2	-51.9	0.09
365	SLU 60	-1171	34	4821	-31.49	-52.36	0.09
365	SLU 61	-1172	34	4822	-31.52	-52.37	0.09
365	SLU 62	-1193	34	4862	-31.95	-53.33	0.09
365	SLU 63	-1193	34	4864	-31.97	-53.34	0.09
365	SLU 64	-1112	33	4561	-30.32	-49.73	0.08
365	SLU 65	-1112	33	4564	-30.36	-49.75	0.08
365	SLU 66	-1142	33	4630	-31.09	-51.13	0.09
365	SLU 67	-1143	34	4632	-31.11	-51.14	0.09
365	SLU 68	-1133	33	4605	-30.81	-50.72	0.09
365	SLU 69	-1164	34	4672	-31.54	-52.1	0.09
365	SLU 70	-1164	34	4673	-31.57	-52.11	0.09
365	SLU 71	-1154	34	4644	-31.23	-51.68	0.09
365	SLU 72	-1155	34	4646	-31.25	-51.69	0.09
365	SLU 73	-1239	36	5043	-33.23	-55.39	0.09
365	SLU 74	-1270	37	5110	-33.96	-56.77	0.09
365	SLU 75	-1270	37	5111	-33.98	-56.78	0.09
365	SLU 76	-1261	36	5085	-33.69	-56.36	0.09
365	SLU 77	-1291	37	5151	-34.42	-57.74	0.1
365	SLU 78	-1291	37	5153	-34.44	-57.75	0.1
365	SLU 79	-1282	37	5124	-34.11	-57.32	0.1
365	SLU 80	-1282	37	5126	-34.13	-57.33	0.1
365	SLU 81	-1293	37	5246	-34.43	-57.79	0.1
365	SLU 82	-1294	37	5248	-34.45	-57.8	0.1
365	SLU 83	-1315	38	5288	-34.88	-58.77	0.1
365	SLU 84	-1315	38	5289	-34.9	-58.78	0.1
365	SLE RA 1	-828	24	3415	-22.68	-37.06	0.06
365	SLE RA 2	-829	24	3417	-22.7	-37.07	0.06
365	SLE RA 3	-849	25	3461	-23.19	-37.99	0.06
365	SLE RA 4	-849	25	3462	-23.21	-38	0.06
365	SLE RA 5	-843	25	3445	-23.01	-37.72	0.06
365	SLE RA 6	-863	25	3489	-23.5	-38.64	0.07
365	SLE RA 7	-863	25	3490	-23.51	-38.65	0.07
365	SLE RA 8	-857	25	3471	-23.29	-38.36	0.07
365	SLE RA 9	-857	25	3472	-23.3	-38.36	0.07
365	SLE RA 10	-913	26	3736	-24.62	-40.84	0.07
365	SLE RA 11	-934	27	3781	-25.11	-41.76	0.07
365	SLE RA 12	-934	27	3782	-25.12	-41.76	0.07
365	SLE RA 13	-928	27	3764	-24.92	-41.48	0.07
365	SLE RA 14	-948	27	3809	-25.41	-42.4	0.07
365	SLE RA 15	-948	27	3810	-25.43	-42.41	0.07
365	SLE RA 16	-942	27	3790	-25.2	-42.12	0.07
365	SLE RA 17	-942	27	3791	-25.22	-42.13	0.07
365	SLE RA 18	-949	27	3872	-25.42	-42.44	0.07
365	SLE RA 19	-950	27	3873	-25.43	-42.44	0.07
365	SLE RA 20	-964	28	3900	-25.72	-43.08	0.07
365	SLE RA 21	-964	28	3901	-25.73	-43.09	0.07
365	SLE FR 1	-828	24	3415	-22.68	-37.06	0.06

Nodo	Cont.	Reazione a traslazione			Reazione a rotazione		
Ind.	N.br.	x	y	z	x	y	z
365	SLE FR 2	-828	24	3415	-22.68	-37.06	0.06
365	SLE FR 3	-834	25	3426	-22.8	-37.32	0.06
365	SLE FR 4	-865	25	3552	-23.5	-38.68	0.07
365	SLE FR 5	-870	25	3563	-23.62	-38.93	0.07
365	SLE FR 6	-889	26	3643	-24.05	-39.75	0.07
365	SLE QP 1	-828	24	3415	-22.68	-37.06	0.06
365	SLE QP 2	-865	25	3552	-23.5	-38.67	0.07
365	SLD 1	-133	9	2948	-8.24	-5.76	0.02
365	SLD 2	-133	9	2948	-8.24	-5.76	0.02
365	SLD 3	-277	26	3324	-26.33	-12.01	0.07
365	SLD 4	-277	26	3324	-26.33	-12.01	0.07
365	SLD 5	-427	-6	2801	8.51	-19.32	-0.02
365	SLD 6	-427	-6	2801	8.51	-19.32	-0.02
365	SLD 7	-906	52	4053	-51.78	-40.16	0.14
365	SLD 8	-906	52	4053	-51.78	-40.16	0.14
365	SLD 9	-823	-2	3051	4.78	-37.19	-0.01
365	SLD 10	-823	-2	3051	4.78	-37.19	-0.01
365	SLD 11	-1302	57	4303	-55.51	-58.03	0.16
365	SLD 12	-1302	57	4303	-55.51	-58.03	0.16
365	SLD 13	-1453	24	3780	-20.67	-65.34	0.06
365	SLD 14	-1453	24	3780	-20.67	-65.34	0.06
365	SLD 15	-1596	42	4156	-38.76	-71.59	0.11
365	SLD 16	-1596	42	4156	-38.76	-71.59	0.11
365	SLV 1	846	-14	2127	12.98	38.29	-0.04
365	SLV 2	846	-14	2127	12.98	38.29	-0.04
365	SLV 3	502	28	3030	-30.74	23.27	0.08
365	SLV 4	502	28	3030	-30.74	23.27	0.08
365	SLV 5	171	-51	1754	53.76	7.19	-0.15
365	SLV 6	171	-51	1754	53.76	7.19	-0.15
365	SLV 7	-978	91	4766	-91.98	-42.87	0.26
365	SLV 8	-978	91	4766	-91.98	-42.87	0.26
365	SLV 9	-752	-40	2338	44.98	-34.48	-0.12
365	SLV 10	-752	-40	2338	44.98	-34.48	-0.12
365	SLV 11	-1901	102	5350	-100.76	-84.54	0.28
365	SLV 12	-1901	102	5350	-100.76	-84.54	0.28
365	SLV 13	-2231	23	4074	-16.26	-100.62	0.05
365	SLV 14	-2231	23	4074	-16.26	-100.62	0.05
365	SLV 15	-2576	65	4977	-59.98	-115.64	0.17
365	SLV 16	-2576	65	4977	-59.98	-115.64	0.17
366	SLU 1	-698	25	3060	-24.78	-29.86	0.04
366	SLU 2	-699	25	3063	-24.82	-29.88	0.04
366	SLU 3	-725	26	3121	-25.64	-31	0.04
366	SLU 4	-726	26	3122	-25.67	-31.01	0.04
366	SLU 5	-718	26	3099	-25.33	-30.68	0.04
366	SLU 6	-744	27	3157	-26.15	-31.81	0.04
366	SLU 7	-744	27	3158	-26.17	-31.82	0.04
366	SLU 8	-736	26	3133	-25.79	-31.47	0.04
366	SLU 9	-736	26	3134	-25.82	-31.48	0.04
366	SLU 10	-814	29	3511	-28.1	-34.91	0.04
366	SLU 11	-840	29	3568	-28.91	-36.03	0.05
366	SLU 12	-841	30	3570	-28.94	-36.04	0.05
366	SLU 13	-833	29	3547	-28.6	-35.71	0.05
366	SLU 14	-859	30	3605	-29.42	-36.84	0.05
366	SLU 15	-859	30	3606	-29.45	-36.85	0.05
366	SLU 16	-851	30	3580	-29.07	-36.5	0.05
366	SLU 17	-851	30	3582	-29.09	-36.51	0.05
366	SLU 18	-863	30	3700	-29.46	-37.05	0.05
366	SLU 19	-863	30	3701	-29.48	-37.05	0.05
366	SLU 20	-882	31	3736	-29.96	-37.85	0.05
366	SLU 21	-882	31	3737	-29.99	-37.86	0.05
366	SLU 22	-807	29	3453	-28.11	-34.59	0.05
366	SLU 23	-808	29	3456	-28.15	-34.6	0.05
366	SLU 24	-834	30	3514	-28.97	-35.73	0.05
366	SLU 25	-835	30	3515	-29	-35.74	0.05
366	SLU 26	-827	29	3492	-28.66	-35.41	0.05
366	SLU 27	-853	30	3550	-29.48	-36.53	0.05
366	SLU 28	-853	30	3552	-29.5	-36.54	0.05
366	SLU 29	-845	30	3526	-29.12	-36.2	0.05
366	SLU 30	-845	30	3527	-29.15	-36.21	0.05
366	SLU 31	-923	32	3904	-31.43	-39.63	0.05
366	SLU 32	-949	33	3961	-32.25	-40.75	0.05
366	SLU 33	-950	33	3963	-32.27	-40.76	0.05
366	SLU 34	-942	33	3940	-31.93	-40.43	0.05
366	SLU 35	-968	33	3998	-32.75	-41.56	0.05
366	SLU 36	-968	33	3999	-32.78	-41.57	0.05
366	SLU 37	-960	33	3973	-32.4	-41.22	0.05
366	SLU 38	-960	33	3975	-32.42	-41.23	0.05
366	SLU 39	-972	33	4093	-32.79	-41.77	0.05
366	SLU 40	-972	33	4094	-32.82	-41.78	0.05
366	SLU 41	-991	34	4129	-33.29	-42.57	0.05
366	SLU 42	-991	34	4131	-33.32	-42.58	0.05
366	SLU 43	-871	32	3844	-31.07	-37.2	0.05
366	SLU 44	-871	32	3846	-31.12	-37.22	0.05
366	SLU 45	-897	33	3904	-31.93	-38.34	0.05
366	SLU 46	-898	33	3906	-31.96	-38.35	0.05
366	SLU 47	-890	32	3882	-31.62	-38.02	0.05
366	SLU 48	-916	33	3940	-32.44	-39.15	0.05
366	SLU 49	-917	33	3942	-32.46	-39.16	0.05
366	SLU 50	-908	33	3916	-32.08	-38.81	0.05
366	SLU 51	-909	33	3917	-32.11	-38.82	0.05

Nodo	Cont.	Reazione a traslazione			Reazione a rotazione		
Ind.	N.br.	x	y	z	x	y	z
366	SLU 52	-986	35	4294	-34.39	-42.24	0.06
366	SLU 53	-1012	36	4352	-35.21	-43.37	0.06
366	SLU 54	-1013	36	4353	-35.23	-43.38	0.06
366	SLU 55	-1005	36	4330	-34.9	-43.05	0.06
366	SLU 56	-1031	36	4388	-35.71	-44.18	0.06
366	SLU 57	-1032	36	4389	-35.74	-44.19	0.06
366	SLU 58	-1023	36	4364	-35.36	-43.84	0.06
366	SLU 59	-1024	36	4365	-35.38	-43.85	0.06
366	SLU 60	-1035	36	4483	-35.75	-44.38	0.06
366	SLU 61	-1035	36	4485	-35.78	-44.39	0.06
366	SLU 62	-1054	37	4519	-36.26	-45.19	0.06
366	SLU 63	-1054	37	4521	-36.28	-45.2	0.06
366	SLU 64	-980	35	4237	-34.4	-41.93	0.06
366	SLU 65	-980	35	4239	-34.45	-41.94	0.06
366	SLU 66	-1006	36	4297	-35.26	-43.07	0.06
366	SLU 67	-1007	36	4299	-35.29	-43.08	0.06
366	SLU 68	-999	36	4275	-34.95	-42.75	0.06
366	SLU 69	-1025	37	4333	-35.77	-43.87	0.06
366	SLU 70	-1026	37	4335	-35.79	-43.88	0.06
366	SLU 71	-1017	36	4309	-35.41	-43.54	0.06
366	SLU 72	-1018	36	4311	-35.44	-43.55	0.06
366	SLU 73	-1095	38	4687	-37.72	-46.97	0.06
366	SLU 74	-1121	39	4745	-38.54	-48.09	0.06
366	SLU 75	-1122	39	4746	-38.56	-48.1	0.06
366	SLU 76	-1114	39	4723	-38.23	-47.77	0.06
366	SLU 77	-1140	40	4781	-39.04	-48.9	0.06
366	SLU 78	-1141	40	4782	-39.07	-48.91	0.06
366	SLU 79	-1132	39	4757	-38.69	-48.56	0.06
366	SLU 80	-1133	39	4758	-38.71	-48.57	0.06
366	SLU 81	-1144	40	4876	-39.08	-49.11	0.06
366	SLU 82	-1144	40	4878	-39.11	-49.12	0.06
366	SLU 83	-1163	40	4912	-39.59	-49.91	0.06
366	SLU 84	-1163	40	4914	-39.61	-49.92	0.06
366	SLE RA 1	-730	26	3173	-25.73	-31.21	0.04
366	SLE RA 2	-730	26	3174	-25.76	-31.22	0.04
366	SLE RA 3	-747	27	3213	-26.3	-31.97	0.04
366	SLE RA 4	-748	27	3214	-26.32	-31.98	0.04
366	SLE RA 5	-742	27	3198	-26.1	-31.76	0.04
366	SLE RA 6	-760	27	3237	-26.64	-32.51	0.04
366	SLE RA 7	-760	27	3238	-26.66	-32.52	0.04
366	SLE RA 8	-755	27	3221	-26.41	-32.29	0.04
366	SLE RA 9	-755	27	3222	-26.42	-32.29	0.04
366	SLE RA 10	-806	29	3473	-27.94	-34.57	0.04
366	SLE RA 11	-824	29	3511	-28.49	-35.32	0.05
366	SLE RA 12	-824	29	3512	-28.51	-35.33	0.05
366	SLE RA 13	-819	29	3497	-28.28	-35.11	0.05
366	SLE RA 14	-837	29	3535	-28.83	-35.86	0.05
366	SLE RA 15	-837	29	3536	-28.84	-35.87	0.05
366	SLE RA 16	-831	29	3519	-28.59	-35.64	0.05
366	SLE RA 17	-832	29	3520	-28.61	-35.64	0.05
366	SLE RA 18	-839	29	3599	-28.85	-36	0.05
366	SLE RA 19	-839	29	3600	-28.87	-36.01	0.05
366	SLE RA 20	-852	30	3623	-29.19	-36.54	0.05
366	SLE RA 21	-852	30	3624	-29.2	-36.54	0.05
366	SLE FR 1	-730	26	3173	-25.73	-31.21	0.04
366	SLE FR 2	-730	26	3173	-25.74	-31.21	0.04
366	SLE FR 3	-735	26	3182	-25.87	-31.43	0.04
366	SLE FR 4	-762	27	3301	-26.67	-32.65	0.04
366	SLE FR 5	-767	27	3310	-26.8	-32.86	0.04
366	SLE FR 6	-784	28	3386	-27.29	-33.61	0.04
366	SLE QP 1	-730	26	3173	-25.73	-31.21	0.04
366	SLE QP 2	-762	27	3301	-26.67	-32.65	0.04
366	SLD 1	-82	10	2687	-10.74	-1.29	0.02
366	SLD 2	-82	10	2687	-10.74	-1.29	0.02
366	SLD 3	-198	31	3022	-31.26	-6.12	0.05
366	SLD 4	-198	31	3022	-31.26	-6.12	0.05
366	SLD 5	-382	-9	2608	9.23	-15.92	-0.02
366	SLD 6	-382	-9	2608	9.23	-15.92	-0.02
366	SLD 7	-769	60	3726	-59.17	-32.01	0.1
366	SLD 8	-769	60	3726	-59.17	-32.01	0.1
366	SLD 9	-755	-6	2875	5.84	-33.29	-0.01
366	SLD 10	-755	-6	2875	5.84	-33.29	-0.01
366	SLD 11	-1143	64	3993	-62.57	-49.38	0.11
366	SLD 12	-1143	64	3993	-62.57	-49.38	0.11
366	SLD 13	-1327	23	3579	-22.07	-59.18	0.03
366	SLD 14	-1327	23	3579	-22.07	-59.18	0.03
366	SLD 15	-1443	44	3914	-42.59	-64.01	0.07
366	SLD 16	-1443	44	3914	-42.59	-64.01	0.07
366	SLV 1	829	-13	1857	11.44	40.66	-0.02
366	SLV 2	829	-13	1857	11.44	40.66	-0.02
366	SLV 3	549	37	2660	-38.02	29.04	0.06
366	SLV 4	549	37	2660	-38.02	29.04	0.06
366	SLV 5	140	-61	1649	59.77	6.97	-0.11
366	SLV 6	140	-61	1649	59.77	6.97	-0.11
366	SLV 7	-794	106	4327	-105.08	-31.76	0.18
366	SLV 8	-794	106	4327	-105.08	-31.76	0.18
366	SLV 9	-731	-52	2274	51.75	-33.53	-0.1
366	SLV 10	-731	-52	2274	51.75	-33.53	-0.1
366	SLV 11	-1665	115	4953	-113.11	-72.26	0.19
366	SLV 12	-1665	115	4953	-113.11	-72.26	0.19

Nodo	Cont.	Reazione a traslazione			Reazione a rotazione		
Ind.	N.br.	x	y	z	x	y	z
366	SLV 13	-2074	17	3941	-15.31	-94.34	0.02
366	SLV 14	-2074	17	3941	-15.31	-94.34	0.02
366	SLV 15	-2354	67	4745	-64.77	-105.96	0.11
366	SLV 16	-2354	67	4745	-64.77	-105.96	0.11
367	SLU 1	-638	27	2977	-27.35	-29.84	0.01
367	SLU 2	-638	27	2980	-27.4	-29.85	0.01
367	SLU 3	-662	28	3034	-28.28	-30.97	0.01
367	SLU 4	-662	28	3036	-28.31	-30.98	0.01
367	SLU 5	-655	28	3014	-27.94	-30.64	0.01
367	SLU 6	-679	28	3068	-28.82	-31.76	0.01
367	SLU 7	-679	28	3070	-28.85	-31.77	0.01
367	SLU 8	-672	28	3045	-28.43	-31.42	0.01
367	SLU 9	-672	28	3047	-28.46	-31.43	0.01
367	SLU 10	-744	31	3421	-31.05	-34.76	0.01
367	SLU 11	-767	31	3475	-31.93	-35.88	0.02
367	SLU 12	-767	31	3477	-31.96	-35.89	0.02
367	SLU 13	-760	31	3455	-31.59	-35.55	0.02
367	SLU 14	-784	32	3509	-32.47	-36.67	0.02
367	SLU 15	-784	32	3510	-32.5	-36.68	0.02
367	SLU 16	-777	32	3486	-32.08	-36.33	0.02
367	SLU 17	-777	32	3487	-32.11	-36.34	0.02
367	SLU 18	-788	32	3607	-32.56	-36.85	0.02
367	SLU 19	-789	32	3609	-32.59	-36.86	0.02
367	SLU 20	-805	33	3641	-33.1	-37.64	0.02
367	SLU 21	-806	33	3642	-33.13	-37.65	0.02
367	SLU 22	-737	31	3361	-31.04	-34.47	0.01
367	SLU 23	-737	31	3364	-31.09	-34.49	0.01
367	SLU 24	-761	32	3418	-31.97	-35.61	0.02
367	SLU 25	-761	32	3420	-32	-35.61	0.02
367	SLU 26	-754	31	3398	-31.63	-35.28	0.02
367	SLU 27	-778	32	3452	-32.51	-36.4	0.02
367	SLU 28	-778	32	3454	-32.54	-36.41	0.02
367	SLU 29	-771	32	3429	-32.12	-36.06	0.02
367	SLU 30	-771	32	3431	-32.15	-36.07	0.02
367	SLU 31	-843	34	3805	-34.74	-39.4	0.02
367	SLU 32	-867	35	3859	-35.62	-40.52	0.02
367	SLU 33	-867	35	3861	-35.65	-40.52	0.02
367	SLU 34	-860	35	3839	-35.28	-40.19	0.02
367	SLU 35	-884	36	3893	-36.16	-41.31	0.02
367	SLU 36	-884	36	3894	-36.19	-41.32	0.02
367	SLU 37	-876	35	3870	-35.77	-40.97	0.02
367	SLU 38	-877	35	3871	-35.8	-40.98	0.02
367	SLU 39	-888	36	3991	-36.25	-41.49	0.02
367	SLU 40	-888	36	3993	-36.28	-41.5	0.02
367	SLU 41	-905	36	4025	-36.79	-42.28	0.02
367	SLU 42	-905	36	4026	-36.82	-42.29	0.02
367	SLU 43	-795	34	3739	-34.29	-37.2	0.02
367	SLU 44	-795	34	3741	-34.34	-37.21	0.02
367	SLU 45	-819	35	3796	-35.22	-38.33	0.02
367	SLU 46	-819	35	3797	-35.25	-38.34	0.02
367	SLU 47	-812	34	3775	-34.88	-38	0.02
367	SLU 48	-836	35	3830	-35.76	-39.12	0.02
367	SLU 49	-836	35	3831	-35.79	-39.13	0.02
367	SLU 50	-829	35	3807	-35.37	-38.78	0.02
367	SLU 51	-829	35	3808	-35.4	-38.79	0.02
367	SLU 52	-901	37	4182	-37.99	-42.12	0.02
367	SLU 53	-925	38	4236	-38.87	-43.24	0.02
367	SLU 54	-925	38	4238	-38.9	-43.25	0.02
367	SLU 55	-918	38	4216	-38.53	-42.91	0.02
367	SLU 56	-942	39	4270	-39.41	-44.03	0.02
367	SLU 57	-942	39	4272	-39.44	-44.04	0.02
367	SLU 58	-934	38	4247	-39.02	-43.69	0.02
367	SLU 59	-935	38	4249	-39.05	-43.7	0.02
367	SLU 60	-946	39	4368	-39.5	-44.21	0.02
367	SLU 61	-946	39	4370	-39.53	-44.22	0.02
367	SLU 62	-963	39	4402	-40.04	-45.01	0.02
367	SLU 63	-963	39	4404	-40.07	-45.01	0.02
367	SLU 64	-894	37	4123	-37.98	-41.84	0.02
367	SLU 65	-895	37	4125	-38.03	-41.85	0.02
367	SLU 66	-919	38	4180	-38.91	-42.97	0.02
367	SLU 67	-919	38	4181	-38.94	-42.97	0.02
367	SLU 68	-912	38	4159	-38.57	-42.64	0.02
367	SLU 69	-935	39	4214	-39.45	-43.76	0.02
367	SLU 70	-936	39	4215	-39.48	-43.77	0.02
367	SLU 71	-928	39	4191	-39.06	-43.42	0.02
367	SLU 72	-928	39	4192	-39.09	-43.43	0.02
367	SLU 73	-1000	41	4566	-41.68	-46.76	0.02
367	SLU 74	-1024	42	4620	-42.56	-47.88	0.02
367	SLU 75	-1024	42	4622	-42.59	-47.88	0.02
367	SLU 76	-1017	42	4600	-42.22	-47.55	0.02
367	SLU 77	-1041	42	4654	-43.1	-48.67	0.02
367	SLU 78	-1041	42	4656	-43.13	-48.68	0.02
367	SLU 79	-1034	42	4631	-42.71	-48.33	0.02
367	SLU 80	-1034	42	4633	-42.74	-48.34	0.02
367	SLU 81	-1045	43	4752	-43.19	-48.85	0.02
367	SLU 82	-1045	43	4754	-43.22	-48.86	0.02
367	SLU 83	-1062	43	4786	-43.73	-49.64	0.02
367	SLU 84	-1062	43	4788	-43.76	-49.65	0.02
367	SLE RA 1	-666	28	3087	-28.4	-31.16	0.01
367	SLE RA 2	-666	28	3089	-28.44	-31.17	0.01

Nodo	Cont.	Reazione a traslazione			Reazione a rotazione		
Ind.	N.br.	x	y	z	x	y	z
367	SLE RA 3	-682	29	3125	-29.03	-31.92	0.01
367	SLE RA 4	-682	29	3126	-29.05	-31.92	0.01
367	SLE RA 5	-678	28	3111	-28.8	-31.7	0.01
367	SLE RA 6	-694	29	3148	-29.39	-32.45	0.01
367	SLE RA 7	-694	29	3149	-29.41	-32.45	0.01
367	SLE RA 8	-689	29	3132	-29.12	-32.22	0.01
367	SLE RA 9	-689	29	3133	-29.15	-32.22	0.01
367	SLE RA 10	-737	30	3383	-30.87	-34.44	0.01
367	SLE RA 11	-753	31	3419	-31.46	-35.19	0.02
367	SLE RA 12	-753	31	3420	-31.48	-35.19	0.02
367	SLE RA 13	-748	31	3405	-31.23	-34.97	0.01
367	SLE RA 14	-764	31	3441	-31.82	-35.72	0.02
367	SLE RA 15	-764	31	3442	-31.84	-35.72	0.02
367	SLE RA 16	-759	31	3426	-31.56	-35.49	0.02
367	SLE RA 17	-759	31	3427	-31.58	-35.5	0.02
367	SLE RA 18	-767	31	3507	-31.88	-35.84	0.02
367	SLE RA 19	-767	31	3508	-31.9	-35.84	0.02
367	SLE RA 20	-778	32	3529	-32.24	-36.37	0.02
367	SLE RA 21	-778	32	3530	-32.26	-36.37	0.02
367	SLE FR 1	-666	28	3087	-28.4	-31.16	0.01
367	SLE FR 2	-666	28	3087	-28.41	-31.16	0.01
367	SLE FR 3	-671	28	3096	-28.55	-31.37	0.01
367	SLE FR 4	-696	29	3213	-29.45	-32.57	0.01
367	SLE FR 5	-701	29	3222	-29.59	-32.78	0.01
367	SLE FR 6	-716	30	3297	-30.14	-33.5	0.01
367	SLE QP 1	-666	28	3087	-28.4	-31.16	0.01
367	SLE QP 2	-696	29	3213	-29.45	-32.57	0.01
367	SLD 1	-107	13	2507	-13.58	-5.73	0.01
367	SLD 2	-107	13	2507	-13.58	-5.73	0.01
367	SLD 3	-207	35	2808	-34.88	-10.21	0.03
367	SLD 4	-207	35	2808	-34.88	-10.21	0.03
367	SLD 5	-368	-9	2544	7.63	-17.72	-0.01
367	SLD 6	-368	-9	2544	7.63	-17.72	-0.01
367	SLD 7	-701	64	3548	-63.39	-32.65	0.04
367	SLD 8	-701	64	3548	-63.39	-32.65	0.04
367	SLD 9	-691	-6	2877	4.5	-32.48	-0.01
367	SLD 10	-691	-6	2877	4.5	-32.48	-0.01
367	SLD 11	-1025	67	3881	-66.52	-47.41	0.04
367	SLD 12	-1025	67	3881	-66.52	-47.41	0.04
367	SLD 13	-1185	23	3617	-24.01	-54.92	0
367	SLD 14	-1185	23	3617	-24.01	-54.92	0
367	SLD 15	-1285	45	3919	-45.32	-59.4	0.02
367	SLD 16	-1285	45	3919	-45.32	-59.4	0.02
367	SLV 1	682	-10	1558	8.53	30.25	0.01
367	SLV 2	682	-10	1558	8.53	30.25	0.01
367	SLV 3	437	42	2274	-42.65	19.3	0.04
367	SLV 4	437	42	2274	-42.65	19.3	0.04
367	SLV 5	89	-63	1630	59.56	2.9	-0.04
367	SLV 6	89	-63	1630	59.56	2.9	-0.04
367	SLV 7	-728	113	4018	-111.02	-33.62	0.08
367	SLV 8	-728	113	4018	-111.02	-33.62	0.08
367	SLV 9	-665	-55	2408	52.13	-31.51	-0.05
367	SLV 10	-665	-55	2408	52.13	-31.51	-0.05
367	SLV 11	-1481	121	4796	-118.45	-68.03	0.07
367	SLV 12	-1481	121	4796	-118.45	-68.03	0.07
367	SLV 13	-1830	16	4152	-16.24	-84.43	-0.02
367	SLV 14	-1830	16	4152	-16.24	-84.43	-0.02
367	SLV 15	-2075	68	4868	-67.42	-95.38	0.02
367	SLV 16	-2075	68	4868	-67.42	-95.38	0.02
368	SLU 1	-585	29	3028	-30.07	-26.91	-0.02
368	SLU 2	-586	29	3031	-30.13	-26.92	-0.02
368	SLU 3	-606	30	3086	-31.08	-27.83	-0.02
368	SLU 4	-606	30	3088	-31.11	-27.84	-0.02
368	SLU 5	-600	30	3066	-30.71	-27.57	-0.02
368	SLU 6	-620	31	3122	-31.65	-28.48	-0.02
368	SLU 7	-620	31	3123	-31.69	-28.49	-0.02
368	SLU 8	-614	30	3098	-31.22	-28.2	-0.02
368	SLU 9	-614	30	3100	-31.26	-28.21	-0.02
368	SLU 10	-685	33	3488	-34.19	-31.6	-0.02
368	SLU 11	-705	34	3543	-35.14	-32.51	-0.02
368	SLU 12	-705	34	3545	-35.18	-32.52	-0.02
368	SLU 13	-699	34	3523	-34.77	-32.25	-0.02
368	SLU 14	-719	35	3579	-35.71	-33.16	-0.02
368	SLU 15	-719	35	3580	-35.75	-33.16	-0.02
368	SLU 16	-713	34	3555	-35.28	-32.88	-0.02
368	SLU 17	-713	34	3557	-35.32	-32.89	-0.02
368	SLU 18	-727	35	3681	-35.88	-33.59	-0.02
368	SLU 19	-727	35	3683	-35.91	-33.6	-0.02
368	SLU 20	-741	35	3716	-36.45	-34.24	-0.02
368	SLU 21	-742	35	3718	-36.48	-34.25	-0.02
368	SLU 22	-677	33	3425	-34.16	-31.18	-0.02
368	SLU 23	-677	33	3427	-34.22	-31.19	-0.02
368	SLU 24	-697	34	3483	-35.16	-32.1	-0.02
368	SLU 25	-697	34	3485	-35.2	-32.11	-0.02
368	SLU 26	-691	34	3463	-34.79	-31.84	-0.02
368	SLU 27	-711	35	3518	-35.74	-32.75	-0.02
368	SLU 28	-712	35	3520	-35.77	-32.76	-0.02
368	SLU 29	-705	34	3495	-35.31	-32.47	-0.02
368	SLU 30	-705	34	3497	-35.34	-32.48	-0.02
368	SLU 31	-777	37	3885	-38.28	-35.87	-0.02

Nodo	Cont.	Reazione a traslazione			Reazione a rotazione		
Ind.	N.br.	x	y	z	x	y	z
368	SLU 32	-797	38	3940	-39.23	-36.78	-0.02
368	SLU 33	-797	38	3942	-39.26	-36.79	-0.02
368	SLU 34	-791	38	3920	-38.85	-36.52	-0.02
368	SLU 35	-811	39	3975	-39.8	-37.43	-0.02
368	SLU 36	-811	39	3977	-39.83	-37.44	-0.02
368	SLU 37	-805	38	3952	-39.37	-37.15	-0.02
368	SLU 38	-805	38	3954	-39.4	-37.16	-0.02
368	SLU 39	-819	39	4078	-39.96	-37.86	-0.02
368	SLU 40	-819	39	4079	-40	-37.87	-0.02
368	SLU 41	-833	39	4113	-40.53	-38.51	-0.02
368	SLU 42	-833	39	4114	-40.57	-38.52	-0.02
368	SLU 43	-730	37	3800	-37.7	-33.51	-0.02
368	SLU 44	-730	37	3803	-37.75	-33.53	-0.02
368	SLU 45	-750	38	3859	-38.7	-34.44	-0.02
368	SLU 46	-750	38	3860	-38.74	-34.44	-0.02
368	SLU 47	-744	37	3838	-38.33	-34.18	-0.02
368	SLU 48	-764	38	3894	-39.27	-35.08	-0.02
368	SLU 49	-764	38	3896	-39.31	-35.09	-0.02
368	SLU 50	-758	38	3871	-38.84	-34.81	-0.02
368	SLU 51	-758	38	3872	-38.88	-34.82	-0.02
368	SLU 52	-829	41	4260	-41.82	-38.21	-0.02
368	SLU 53	-849	41	4316	-42.76	-39.11	-0.02
368	SLU 54	-849	42	4318	-42.8	-39.12	-0.02
368	SLU 55	-843	41	4295	-42.39	-38.85	-0.02
368	SLU 56	-863	42	4351	-43.34	-39.76	-0.02
368	SLU 57	-864	42	4353	-43.37	-39.77	-0.02
368	SLU 58	-857	42	4328	-42.9	-39.49	-0.02
368	SLU 59	-857	42	4330	-42.94	-39.5	-0.02
368	SLU 60	-872	42	4453	-43.5	-40.2	-0.02
368	SLU 61	-872	42	4455	-43.53	-40.21	-0.02
368	SLU 62	-886	43	4488	-44.07	-40.84	-0.02
368	SLU 63	-886	43	4490	-44.11	-40.85	-0.02
368	SLU 64	-821	41	4197	-41.78	-37.79	-0.02
368	SLU 65	-821	41	4200	-41.84	-37.8	-0.02
368	SLU 66	-841	42	4255	-42.79	-38.71	-0.02
368	SLU 67	-842	42	4257	-42.82	-38.72	-0.02
368	SLU 68	-836	41	4235	-42.41	-38.45	-0.02
368	SLU 69	-856	42	4291	-43.36	-39.36	-0.02
368	SLU 70	-856	42	4292	-43.39	-39.36	-0.02
368	SLU 71	-849	42	4267	-42.93	-39.08	-0.02
368	SLU 72	-850	42	4269	-42.96	-39.09	-0.02
368	SLU 73	-921	45	4657	-45.9	-42.48	-0.02
368	SLU 74	-941	45	4713	-46.85	-43.39	-0.02
368	SLU 75	-941	45	4714	-46.88	-43.4	-0.02
368	SLU 76	-935	45	4692	-46.47	-43.13	-0.02
368	SLU 77	-955	46	4748	-47.42	-44.03	-0.02
368	SLU 78	-955	46	4749	-47.46	-44.04	-0.03
368	SLU 79	-949	46	4724	-46.99	-43.76	-0.02
368	SLU 80	-949	46	4726	-47.02	-43.77	-0.02
368	SLU 81	-963	46	4850	-47.58	-44.47	-0.03
368	SLU 82	-963	46	4852	-47.62	-44.48	-0.03
368	SLU 83	-977	47	4885	-48.16	-45.12	-0.03
368	SLU 84	-977	47	4887	-48.19	-45.13	-0.03
368	SLE RA 1	-612	30	3141	-31.24	-28.13	-0.02
368	SLE RA 2	-612	30	3143	-31.28	-28.14	-0.02
368	SLE RA 3	-625	31	3180	-31.91	-28.74	-0.02
368	SLE RA 4	-625	31	3181	-31.93	-28.75	-0.02
368	SLE RA 5	-621	31	3167	-31.66	-28.57	-0.02
368	SLE RA 6	-634	31	3204	-32.29	-29.17	-0.02
368	SLE RA 7	-635	31	3205	-32.32	-29.18	-0.02
368	SLE RA 8	-630	31	3188	-32.01	-28.99	-0.02
368	SLE RA 9	-631	31	3189	-32.03	-29	-0.02
368	SLE RA 10	-678	33	3448	-33.99	-31.26	-0.02
368	SLE RA 11	-691	34	3485	-34.62	-31.86	-0.02
368	SLE RA 12	-691	34	3486	-34.64	-31.87	-0.02
368	SLE RA 13	-687	33	3471	-34.37	-31.69	-0.02
368	SLE RA 14	-701	34	3508	-35	-32.29	-0.02
368	SLE RA 15	-701	34	3510	-35.02	-32.3	-0.02
368	SLE RA 16	-697	34	3493	-34.71	-32.11	-0.02
368	SLE RA 17	-697	34	3494	-34.74	-32.12	-0.02
368	SLE RA 18	-706	34	3577	-35.11	-32.58	-0.02
368	SLE RA 19	-706	34	3578	-35.13	-32.59	-0.02
368	SLE RA 20	-716	34	3600	-35.49	-33.01	-0.02
368	SLE RA 21	-716	34	3601	-35.52	-33.02	-0.02
368	SLE FR 1	-612	30	3141	-31.24	-28.13	-0.02
368	SLE FR 2	-612	30	3142	-31.25	-28.13	-0.02
368	SLE FR 3	-615	30	3151	-31.39	-28.3	-0.02
368	SLE FR 4	-640	31	3272	-32.41	-29.47	-0.02
368	SLE FR 5	-644	32	3281	-32.55	-29.64	-0.02
368	SLE FR 6	-659	32	3359	-33.18	-30.35	-0.02
368	SLE QP 1	-612	30	3141	-31.24	-28.13	-0.02
368	SLE QP 2	-640	31	3272	-32.4	-29.46	-0.02
368	SLD 1	-119	15	2372	-16.83	-3.13	-0.01
368	SLD 2	-119	15	2372	-16.83	-3.13	-0.01
368	SLD 3	-211	36	2645	-37.43	-6.9	-0.01
368	SLD 4	-211	36	2645	-37.43	-6.9	-0.01
368	SLD 5	-343	-6	2587	3.51	-15.85	0
368	SLD 6	-343	-6	2587	3.51	-15.85	0
368	SLD 7	-652	66	3499	-65.15	-28.41	-0.03
368	SLD 8	-652	66	3499	-65.15	-28.41	-0.03

Nodo	Cont.	Reazione a traslazione			Reazione a rotazione		
Ind.	N.br.	x	y	z	x	y	z
368	SLD 9	-628	-3	3044	0.34	-30.51	-0.01
368	SLD 10	-628	-3	3044	0.34	-30.51	-0.01
368	SLD 11	-937	69	3957	-68.31	-43.08	-0.03
368	SLD 12	-937	69	3957	-68.31	-43.08	-0.03
368	SLD 13	-1069	26	3898	-27.38	-52.02	-0.02
368	SLD 14	-1069	26	3898	-27.38	-52.02	-0.02
368	SLD 15	-1161	48	4172	-47.97	-55.79	-0.03
368	SLD 16	-1161	48	4172	-47.97	-55.79	-0.03
368	SLV 1	582	-8	1166	4.77	32.16	0.01
368	SLV 2	582	-8	1166	4.77	32.16	0.01
368	SLV 3	353	44	1812	-44.48	22.9	-0.01
368	SLV 4	353	44	1812	-44.48	22.9	-0.01
368	SLV 5	73	-58	1660	53.45	3.06	0.02
368	SLV 6	73	-58	1660	53.45	3.06	0.02
368	SLV 7	-688	113	3814	-110.72	-27.79	-0.04
368	SLV 8	-688	113	3814	-110.72	-27.79	-0.04
368	SLV 9	-592	-50	2730	45.92	-31.14	0.01
368	SLV 10	-592	-50	2730	45.92	-31.14	0.01
368	SLV 11	-1353	121	4883	-118.25	-61.99	-0.05
368	SLV 12	-1353	121	4883	-118.25	-61.99	-0.05
368	SLV 13	-1633	19	4731	-20.32	-81.83	-0.02
368	SLV 14	-1633	19	4731	-20.32	-81.83	-0.02
368	SLV 15	-1862	71	5378	-69.57	-91.08	-0.04
368	SLV 16	-1862	71	5378	-69.57	-91.08	-0.04
369	SLU 1	-622	34	3195	-33.52	-31.15	-0.03
369	SLU 2	-622	34	3198	-33.58	-31.16	-0.03
369	SLU 3	-641	35	3260	-34.61	-32.14	-0.03
369	SLU 4	-641	35	3262	-34.65	-32.15	-0.03
369	SLU 5	-635	35	3238	-34.2	-31.84	-0.03
369	SLU 6	-654	36	3300	-35.23	-32.83	-0.03
369	SLU 7	-655	36	3302	-35.27	-32.83	-0.03
369	SLU 8	-648	35	3275	-34.74	-32.51	-0.03
369	SLU 9	-648	35	3277	-34.78	-32.52	-0.03
369	SLU 10	-727	39	3692	-38.18	-36.43	-0.03
369	SLU 11	-746	40	3754	-39.21	-37.41	-0.03
369	SLU 12	-746	40	3756	-39.25	-37.42	-0.03
369	SLU 13	-740	39	3733	-38.79	-37.11	-0.03
369	SLU 14	-759	40	3795	-39.82	-38.1	-0.03
369	SLU 15	-760	40	3796	-39.86	-38.1	-0.03
369	SLU 16	-753	40	3770	-39.34	-37.78	-0.03
369	SLU 17	-753	40	3771	-39.38	-37.79	-0.03
369	SLU 18	-772	41	3901	-40.08	-38.68	-0.03
369	SLU 19	-772	41	3903	-40.12	-38.69	-0.03
369	SLU 20	-785	41	3941	-40.7	-39.36	-0.03
369	SLU 21	-785	41	3943	-40.74	-39.37	-0.03
369	SLU 22	-717	39	3624	-38.11	-35.95	-0.03
369	SLU 23	-717	39	3627	-38.17	-35.96	-0.03
369	SLU 24	-736	40	3689	-39.2	-36.94	-0.03
369	SLU 25	-737	40	3691	-39.24	-36.95	-0.03
369	SLU 26	-731	39	3667	-38.79	-36.64	-0.03
369	SLU 27	-750	40	3729	-39.81	-37.63	-0.03
369	SLU 28	-750	40	3731	-39.85	-37.63	-0.03
369	SLU 29	-743	40	3704	-39.33	-37.31	-0.03
369	SLU 30	-744	40	3706	-39.37	-37.32	-0.03
369	SLU 31	-822	43	4121	-42.77	-41.23	-0.03
369	SLU 32	-841	44	4183	-43.8	-42.21	-0.04
369	SLU 33	-842	44	4185	-43.84	-42.22	-0.04
369	SLU 34	-836	44	4162	-43.38	-41.91	-0.04
369	SLU 35	-855	45	4224	-44.41	-42.9	-0.04
369	SLU 36	-855	45	4225	-44.45	-42.9	-0.04
369	SLU 37	-849	44	4199	-43.93	-42.58	-0.04
369	SLU 38	-849	44	4200	-43.97	-42.59	-0.04
369	SLU 39	-867	45	4330	-44.67	-43.48	-0.04
369	SLU 40	-867	45	4332	-44.71	-43.48	-0.04
369	SLU 41	-880	46	4370	-45.29	-44.16	-0.04
369	SLU 42	-881	46	4372	-45.33	-44.17	-0.04
369	SLU 43	-776	43	4007	-42	-38.85	-0.03
369	SLU 44	-776	43	4010	-42.07	-38.86	-0.03
369	SLU 45	-795	44	4072	-43.09	-39.84	-0.03
369	SLU 46	-795	44	4073	-43.13	-39.85	-0.03
369	SLU 47	-789	43	4050	-42.68	-39.54	-0.03
369	SLU 48	-808	44	4112	-43.71	-40.52	-0.03
369	SLU 49	-808	44	4114	-43.75	-40.53	-0.03
369	SLU 50	-802	44	4087	-43.23	-40.21	-0.03
369	SLU 51	-802	44	4089	-43.27	-40.22	-0.03
369	SLU 52	-881	47	4504	-46.66	-44.13	-0.04
369	SLU 53	-900	48	4566	-47.69	-45.11	-0.04
369	SLU 54	-900	48	4568	-47.73	-45.12	-0.04
369	SLU 55	-894	48	4544	-47.28	-44.81	-0.04
369	SLU 56	-913	49	4606	-48.3	-45.79	-0.04
369	SLU 57	-913	49	4608	-48.34	-45.8	-0.04
369	SLU 58	-907	48	4581	-47.82	-45.48	-0.04
369	SLU 59	-907	48	4583	-47.86	-45.49	-0.04
369	SLU 60	-926	49	4713	-48.56	-46.38	-0.04
369	SLU 61	-926	49	4714	-48.61	-46.38	-0.04
369	SLU 62	-939	50	4753	-49.18	-47.06	-0.04
369	SLU 63	-939	50	4755	-49.22	-47.07	-0.04
369	SLU 64	-871	47	4435	-46.59	-43.65	-0.04
369	SLU 65	-871	47	4439	-46.65	-43.66	-0.04
369	SLU 66	-890	48	4501	-47.68	-44.64	-0.04

Nodo	Cont.	Reazione a traslazione			Reazione a rotazione		
Ind.	N.br.	x	y	z	x	y	z
369	SLU 67	-890	48	4502	-47.72	-44.65	-0.04
369	SLU 68	-884	48	4479	-47.27	-44.34	-0.04
369	SLU 69	-903	49	4541	-48.3	-45.32	-0.04
369	SLU 70	-904	49	4543	-48.34	-45.33	-0.04
369	SLU 71	-897	48	4516	-47.81	-45.01	-0.04
369	SLU 72	-898	48	4518	-47.85	-45.02	-0.04
369	SLU 73	-976	52	4933	-51.25	-48.93	-0.04
369	SLU 74	-995	53	4995	-52.28	-49.91	-0.04
369	SLU 75	-996	53	4997	-52.32	-49.92	-0.04
369	SLU 76	-990	52	4973	-51.86	-49.61	-0.04
369	SLU 77	-1009	54	5035	-52.89	-50.59	-0.04
369	SLU 78	-1009	54	5037	-52.93	-50.6	-0.04
369	SLU 79	-1002	53	5010	-52.41	-50.28	-0.04
369	SLU 80	-1003	53	5012	-52.45	-50.29	-0.04
369	SLU 81	-1021	54	5142	-53.15	-51.18	-0.04
369	SLU 82	-1021	54	5143	-53.19	-51.18	-0.04
369	SLU 83	-1034	54	5182	-53.77	-51.86	-0.04
369	SLU 84	-1034	54	5184	-53.81	-51.87	-0.04
369	SLE RA 1	-649	35	3318	-34.83	-32.52	-0.03
369	SLE RA 2	-649	35	3320	-34.87	-32.53	-0.03
369	SLE RA 3	-662	36	3361	-35.56	-33.18	-0.03
369	SLE RA 4	-662	36	3362	-35.58	-33.19	-0.03
369	SLE RA 5	-658	36	3346	-35.28	-32.98	-0.03
369	SLE RA 6	-671	36	3388	-35.97	-33.64	-0.03
369	SLE RA 7	-671	36	3389	-35.99	-33.64	-0.03
369	SLE RA 8	-667	36	3371	-35.65	-33.43	-0.03
369	SLE RA 9	-667	36	3372	-35.67	-33.43	-0.03
369	SLE RA 10	-719	38	3649	-37.94	-36.04	-0.03
369	SLE RA 11	-732	39	3691	-38.62	-36.7	-0.03
369	SLE RA 12	-732	39	3692	-38.65	-36.7	-0.03
369	SLE RA 13	-728	39	3676	-38.35	-36.5	-0.03
369	SLE RA 14	-741	39	3717	-39.03	-37.15	-0.03
369	SLE RA 15	-741	40	3719	-39.06	-37.16	-0.03
369	SLE RA 16	-737	39	3701	-38.71	-36.94	-0.03
369	SLE RA 17	-737	39	3702	-38.74	-36.95	-0.03
369	SLE RA 18	-749	40	3788	-39.21	-37.54	-0.03
369	SLE RA 19	-749	40	3790	-39.23	-37.54	-0.03
369	SLE RA 20	-758	40	3815	-39.61	-37.99	-0.03
369	SLE RA 21	-758	40	3816	-39.64	-38	-0.03
369	SLE FR 1	-649	35	3318	-34.83	-32.52	-0.03
369	SLE FR 2	-649	35	3318	-34.84	-32.52	-0.03
369	SLE FR 3	-653	35	3328	-34.99	-32.7	-0.03
369	SLE FR 4	-679	37	3459	-36.15	-34.03	-0.03
369	SLE FR 5	-683	37	3470	-36.3	-34.21	-0.03
369	SLE FR 6	-699	37	3553	-37.02	-35.03	-0.03
369	SLE QP 1	-649	35	3318	-34.83	-32.52	-0.03
369	SLE QP 2	-679	37	3459	-36.14	-34.03	-0.03
369	SLD 1	-238	19	2215	-20.95	-12.21	-0.02
369	SLD 2	-238	19	2215	-20.95	-12.21	-0.02
369	SLD 3	-334	40	2494	-39.71	-16.5	-0.03
369	SLD 4	-334	40	2494	-39.71	-16.5	-0.03
369	SLD 5	-400	0	2661	-3.13	-20.98	-0.01
369	SLD 6	-400	0	2661	-3.13	-20.98	-0.01
369	SLD 7	-722	69	3594	-65.66	-35.27	-0.04
369	SLD 8	-722	69	3594	-65.66	-35.27	-0.04
369	SLD 9	-636	4	3324	-6.62	-32.78	-0.01
369	SLD 10	-636	4	3324	-6.62	-32.78	-0.01
369	SLD 11	-958	73	4256	-69.15	-47.07	-0.05
369	SLD 12	-958	73	4256	-69.15	-47.07	-0.05
369	SLD 13	-1024	33	4423	-32.57	-51.55	-0.03
369	SLD 14	-1024	33	4423	-32.57	-51.55	-0.03
369	SLD 15	-1120	54	4703	-51.33	-55.84	-0.04
369	SLD 16	-1120	54	4703	-51.33	-55.84	-0.04
369	SLV 1	356	-4	550	-0.04	17.08	0
369	SLV 2	356	-4	550	-0.04	17.08	0
369	SLV 3	119	45	1211	-44.61	6.54	-0.03
369	SLV 4	119	45	1211	-44.61	6.54	-0.03
369	SLV 5	-9	-50	1584	42.28	-2.72	0.01
369	SLV 6	-9	-50	1584	42.28	-2.72	0.01
369	SLV 7	-799	113	3787	-106.27	-37.83	-0.06
369	SLV 8	-799	113	3787	-106.27	-37.83	-0.06
369	SLV 9	-559	-40	3131	33.99	-30.22	0.01
369	SLV 10	-559	-40	3131	33.99	-30.22	0.01
369	SLV 11	-1349	123	5334	-114.56	-65.33	-0.07
369	SLV 12	-1349	123	5334	-114.56	-65.33	-0.07
369	SLV 13	-1477	29	5707	-27.67	-74.6	-0.03
369	SLV 14	-1477	29	5707	-27.67	-74.6	-0.03
369	SLV 15	-1714	77	6368	-72.24	-85.13	-0.05
369	SLV 16	-1714	77	6368	-72.24	-85.13	-0.05
370	SLU 1	-641	49	3704	-37.27	-35.26	0.11
370	SLU 2	-641	49	3707	-37.35	-35.29	0.11
370	SLU 3	-658	51	3787	-38.46	-36.23	0.12
370	SLU 4	-659	51	3789	-38.51	-36.25	0.12
370	SLU 5	-653	50	3760	-38	-35.94	0.12
370	SLU 6	-670	52	3839	-39.11	-36.88	0.12
370	SLU 7	-670	52	3842	-39.16	-36.89	0.12
370	SLU 8	-664	51	3809	-38.58	-36.56	0.12
370	SLU 9	-664	51	3811	-38.62	-36.58	0.12
370	SLU 10	-749	56	4300	-42.55	-41.37	0.13
370	SLU 11	-766	58	4380	-43.66	-42.31	0.13

Nodo	Cont.	Reazione a traslazione			Reazione a rotazione		
Ind.	N.br.	x	y	z	x	y	z
370	SLU 12	-766	58	4382	-43.71	-42.32	0.13
370	SLU 13	-761	57	4353	-43.2	-42.02	0.13
370	SLU 14	-778	59	4433	-44.31	-42.96	0.14
370	SLU 15	-778	59	4435	-44.36	-42.97	0.14
370	SLU 16	-772	58	4402	-43.78	-42.64	0.13
370	SLU 17	-772	58	4405	-43.82	-42.66	0.13
370	SLU 18	-795	59	4551	-44.7	-43.95	0.14
370	SLU 19	-795	59	4553	-44.75	-43.96	0.14
370	SLU 20	-807	60	4604	-45.35	-44.6	0.14
370	SLU 21	-807	60	4606	-45.4	-44.61	0.14
370	SLU 22	-737	56	4220	-42.42	-40.64	0.13
370	SLU 23	-737	56	4224	-42.5	-40.67	0.13
370	SLU 24	-754	58	4303	-43.61	-41.6	0.13
370	SLU 25	-754	58	4305	-43.66	-41.62	0.13
370	SLU 26	-749	57	4277	-43.15	-41.32	0.13
370	SLU 27	-766	59	4356	-44.26	-42.25	0.14
370	SLU 28	-766	59	4358	-44.31	-42.27	0.14
370	SLU 29	-760	58	4326	-43.73	-41.94	0.13
370	SLU 30	-760	58	4328	-43.77	-41.95	0.13
370	SLU 31	-845	63	4817	-47.7	-46.75	0.15
370	SLU 32	-862	65	4896	-48.81	-47.68	0.15
370	SLU 33	-862	65	4899	-48.85	-47.7	0.15
370	SLU 34	-857	64	4870	-48.35	-47.4	0.15
370	SLU 35	-874	66	4949	-49.46	-48.33	0.15
370	SLU 36	-874	66	4951	-49.51	-48.35	0.15
370	SLU 37	-868	65	4919	-48.93	-48.02	0.15
370	SLU 38	-868	65	4921	-48.97	-48.03	0.15
370	SLU 39	-891	66	5068	-49.85	-49.32	0.15
370	SLU 40	-891	66	5070	-49.89	-49.34	0.15
370	SLU 41	-902	67	5121	-50.5	-49.97	0.16
370	SLU 42	-903	67	5123	-50.55	-49.99	0.16
370	SLU 43	-800	62	4638	-46.69	-44	0.14
370	SLU 44	-801	62	4641	-46.77	-44.02	0.14
370	SLU 45	-818	63	4721	-47.88	-44.96	0.15
370	SLU 46	-818	63	4723	-47.92	-44.98	0.15
370	SLU 47	-812	63	4694	-47.42	-44.67	0.15
370	SLU 48	-829	64	4773	-48.53	-45.61	0.15
370	SLU 49	-830	64	4776	-48.58	-45.63	0.15
370	SLU 50	-823	64	4743	-48	-45.29	0.15
370	SLU 51	-824	64	4745	-48.04	-45.31	0.15
370	SLU 52	-909	69	5234	-51.96	-50.1	0.16
370	SLU 53	-926	70	5314	-53.08	-51.04	0.16
370	SLU 54	-926	70	5316	-53.12	-51.06	0.16
370	SLU 55	-920	70	5287	-52.62	-50.75	0.16
370	SLU 56	-937	71	5366	-53.73	-51.69	0.16
370	SLU 57	-937	71	5369	-53.77	-51.71	0.17
370	SLU 58	-931	70	5336	-53.19	-51.37	0.16
370	SLU 59	-932	71	5339	-53.24	-51.39	0.16
370	SLU 60	-954	72	5485	-54.12	-52.68	0.17
370	SLU 61	-955	72	5487	-54.16	-52.7	0.17
370	SLU 62	-966	73	5538	-54.77	-53.33	0.17
370	SLU 63	-966	73	5540	-54.81	-53.35	0.17
370	SLU 64	-896	69	5154	-51.84	-49.37	0.16
370	SLU 65	-897	69	5158	-51.91	-49.4	0.16
370	SLU 66	-914	70	5237	-53.03	-50.34	0.16
370	SLU 67	-914	70	5239	-53.07	-50.36	0.16
370	SLU 68	-908	70	5211	-52.57	-50.05	0.16
370	SLU 69	-925	71	5290	-53.68	-50.99	0.16
370	SLU 70	-925	71	5292	-53.72	-51.01	0.16
370	SLU 71	-919	70	5260	-53.14	-50.67	0.16
370	SLU 72	-920	70	5262	-53.19	-50.69	0.16
370	SLU 73	-1004	76	5751	-57.11	-55.48	0.18
370	SLU 74	-1021	77	5830	-58.23	-56.42	0.18
370	SLU 75	-1022	77	5832	-58.27	-56.44	0.18
370	SLU 76	-1016	77	5804	-57.77	-56.13	0.18
370	SLU 77	-1033	78	5883	-58.88	-57.07	0.18
370	SLU 78	-1033	78	5885	-58.92	-57.09	0.18
370	SLU 79	-1027	77	5853	-58.34	-56.75	0.18
370	SLU 80	-1027	77	5855	-58.39	-56.77	0.18
370	SLU 81	-1050	79	6002	-59.27	-58.06	0.18
370	SLU 82	-1051	79	6004	-59.31	-58.07	0.18
370	SLU 83	-1062	79	6054	-59.92	-58.71	0.18
370	SLU 84	-1062	79	6057	-59.96	-58.72	0.18
370	SLE RA 1	-668	51	3851	-38.74	-36.8	0.12
370	SLE RA 2	-669	51	3854	-38.8	-36.82	0.12
370	SLE RA 3	-680	52	3907	-39.54	-37.44	0.12
370	SLE RA 4	-680	52	3908	-39.57	-37.45	0.12
370	SLE RA 5	-676	52	3889	-39.23	-37.25	0.12
370	SLE RA 6	-688	53	3942	-39.97	-37.87	0.12
370	SLE RA 7	-688	53	3943	-40	-37.89	0.12
370	SLE RA 8	-684	52	3922	-39.61	-37.66	0.12
370	SLE RA 9	-684	53	3923	-39.65	-37.67	0.12
370	SLE RA 10	-740	56	4249	-42.26	-40.87	0.13
370	SLE RA 11	-752	57	4302	-43	-41.49	0.13
370	SLE RA 12	-752	57	4303	-43.03	-41.51	0.13
370	SLE RA 13	-748	57	4284	-42.7	-41.3	0.13
370	SLE RA 14	-760	58	4337	-43.44	-41.93	0.13
370	SLE RA 15	-760	58	4339	-43.47	-41.94	0.13
370	SLE RA 16	-756	57	4317	-43.08	-41.72	0.13
370	SLE RA 17	-756	57	4319	-43.11	-41.73	0.13

Nodo	Cont.	Reazione a traslazione			Reazione a rotazione		
Ind.	N.br.	x	y	z	x	y	z
370	SLE RA 18	-771	58	4416	-43.7	-42.59	0.13
370	SLE RA 19	-771	58	4418	-43.73	-42.6	0.13
370	SLE RA 20	-779	58	4451	-44.13	-43.02	0.14
370	SLE RA 21	-779	59	4453	-44.16	-43.03	0.14
370	SLE FR 1	-668	51	3851	-38.74	-36.8	0.12
370	SLE FR 2	-668	51	3852	-38.75	-36.8	0.12
370	SLE FR 3	-671	52	3865	-38.92	-36.97	0.12
370	SLE FR 4	-699	53	4021	-40.24	-38.54	0.12
370	SLE FR 5	-702	54	4035	-40.4	-38.71	0.12
370	SLE FR 6	-720	55	4134	-41.22	-39.69	0.13
370	SLE QP 1	-668	51	3851	-38.74	-36.8	0.12
370	SLE QP 2	-699	53	4021	-40.23	-38.53	0.12
370	SLD 1	-291	33	2136	-25.64	-12.59	0.12
370	SLD 2	-291	33	2136	-25.64	-12.59	0.12
370	SLD 3	-369	54	2477	-41.76	-16.22	0.16
370	SLD 4	-369	54	2477	-41.76	-16.22	0.16
370	SLD 5	-459	16	2937	-11.39	-25.24	0.06
370	SLD 6	-459	16	2937	-11.39	-25.24	0.06
370	SLD 7	-718	85	4076	-65.15	-37.35	0.19
370	SLD 8	-718	85	4076	-65.15	-37.35	0.19
370	SLD 9	-680	22	3965	-15.31	-39.71	0.05
370	SLD 10	-680	22	3965	-15.31	-39.71	0.05
370	SLD 11	-939	91	5105	-69.07	-51.83	0.19
370	SLD 12	-939	91	5105	-69.07	-51.83	0.19
370	SLD 13	-1029	53	5564	-38.7	-60.84	0.09
370	SLD 14	-1029	53	5564	-38.7	-60.84	0.09
370	SLD 15	-1107	73	5906	-54.82	-64.48	0.13
370	SLD 16	-1107	73	5906	-54.82	-64.48	0.13
370	SLV 1	256	6	-387	-5.75	22.12	0.11
370	SLV 2	256	6	-387	-5.75	22.12	0.11
370	SLV 3	67	55	427	-43.75	13.37	0.21
370	SLV 4	67	55	427	-43.75	13.37	0.21
370	SLV 5	-127	-34	1464	27.73	-7.07	-0.02
370	SLV 6	-127	-34	1464	27.73	-7.07	-0.02
370	SLV 7	-755	127	4177	-98.91	-36.23	0.29
370	SLV 8	-755	127	4177	-98.91	-36.23	0.29
370	SLV 9	-643	-21	3865	18.45	-40.84	-0.04
370	SLV 10	-643	-21	3865	18.45	-40.84	-0.04
370	SLV 11	-1271	141	6577	-108.19	-70	0.27
370	SLV 12	-1271	141	6577	-108.19	-70	0.27
370	SLV 13	-1465	52	7614	-36.71	-90.44	0.04
370	SLV 14	-1465	52	7614	-36.71	-90.44	0.04
370	SLV 15	-1654	100	8428	-74.71	-99.18	0.13
370	SLV 16	-1654	100	8428	-74.71	-99.18	0.13
371	SLU 1	-735	19	2469	-19.02	-22.67	-3.14
371	SLU 2	-735	20	2471	-19.06	-22.69	-3.14
371	SLU 3	-754	20	2529	-19.62	-23.29	-3.23
371	SLU 4	-754	20	2530	-19.64	-23.3	-3.24
371	SLU 5	-748	20	2510	-19.38	-23.1	-3.2
371	SLU 6	-766	20	2567	-19.94	-23.7	-3.29
371	SLU 7	-766	20	2569	-19.96	-23.71	-3.29
371	SLU 8	-759	20	2547	-19.66	-23.49	-3.24
371	SLU 9	-760	20	2548	-19.69	-23.5	-3.25
371	SLU 10	-858	23	2878	-21.75	-26.5	-3.59
371	SLU 11	-876	23	2935	-22.3	-27.1	-3.68
371	SLU 12	-876	23	2936	-22.33	-27.11	-3.68
371	SLU 13	-870	23	2917	-22.07	-26.91	-3.64
371	SLU 14	-888	23	2974	-22.62	-27.51	-3.73
371	SLU 15	-889	23	2975	-22.65	-27.52	-3.74
371	SLU 16	-882	23	2953	-22.35	-27.3	-3.69
371	SLU 17	-882	23	2954	-22.38	-27.31	-3.69
371	SLU 18	-910	24	3050	-22.86	-28.11	-3.77
371	SLU 19	-910	24	3051	-22.89	-28.12	-3.78
371	SLU 20	-922	24	3088	-23.18	-28.52	-3.83
371	SLU 21	-922	24	3090	-23.21	-28.53	-3.83
371	SLU 22	-843	22	2825	-21.67	-26.06	-3.57
371	SLU 23	-843	22	2827	-21.71	-26.08	-3.58
371	SLU 24	-861	23	2884	-22.26	-26.68	-3.67
371	SLU 25	-862	23	2886	-22.29	-26.69	-3.68
371	SLU 26	-856	23	2866	-22.03	-26.49	-3.63
371	SLU 27	-874	23	2923	-22.58	-27.09	-3.72
371	SLU 28	-874	23	2925	-22.61	-27.1	-3.73
371	SLU 29	-867	23	2902	-22.31	-26.88	-3.68
371	SLU 30	-868	23	2904	-22.33	-26.89	-3.68
371	SLU 31	-966	25	3233	-24.4	-29.89	-4.03
371	SLU 32	-984	26	3291	-24.95	-30.49	-4.12
371	SLU 33	-984	26	3292	-24.97	-30.5	-4.12
371	SLU 34	-978	26	3272	-24.72	-30.3	-4.08
371	SLU 35	-996	26	3330	-25.27	-30.9	-4.17
371	SLU 36	-997	26	3331	-25.29	-30.91	-4.17
371	SLU 37	-990	26	3309	-25	-30.69	-4.12
371	SLU 38	-990	26	3310	-25.02	-30.7	-4.13
371	SLU 39	-1018	27	3405	-25.51	-31.5	-4.21
371	SLU 40	-1018	27	3407	-25.53	-31.51	-4.21
371	SLU 41	-1030	27	3444	-25.83	-31.91	-4.26
371	SLU 42	-1030	27	3445	-25.85	-31.92	-4.27
371	SLU 43	-918	24	3088	-23.82	-28.31	-3.93
371	SLU 44	-919	24	3090	-23.86	-28.33	-3.93
371	SLU 45	-937	25	3148	-24.41	-28.93	-4.03
371	SLU 46	-937	25	3149	-24.44	-28.94	-4.03

Nodo	Cont.	Reazione a traslazione			Reazione a rotazione		
Ind.	N.br.	x	y	z	x	y	z
371	SLU 47	-931	25	3129	-24.18	-28.74	-3.99
371	SLU 48	-949	25	3186	-24.73	-29.34	-4.08
371	SLU 49	-950	25	3188	-24.76	-29.35	-4.08
371	SLU 50	-943	25	3165	-24.46	-29.13	-4.03
371	SLU 51	-943	25	3167	-24.49	-29.14	-4.04
371	SLU 52	-1041	27	3497	-26.55	-32.14	-4.38
371	SLU 53	-1060	28	3554	-27.1	-32.74	-4.47
371	SLU 54	-1060	28	3555	-27.13	-32.75	-4.47
371	SLU 55	-1054	28	3535	-26.87	-32.55	-4.43
371	SLU 56	-1072	28	3593	-27.42	-33.15	-4.52
371	SLU 57	-1072	28	3594	-27.45	-33.16	-4.53
371	SLU 58	-1065	28	3572	-27.15	-32.94	-4.48
371	SLU 59	-1066	28	3573	-27.17	-32.95	-4.48
371	SLU 60	-1093	29	3668	-27.66	-33.75	-4.56
371	SLU 61	-1094	29	3670	-27.69	-33.76	-4.57
371	SLU 62	-1106	29	3707	-27.98	-34.16	-4.62
371	SLU 63	-1106	29	3709	-28.01	-34.17	-4.62
371	SLU 64	-1026	27	3444	-26.47	-31.7	-4.37
371	SLU 65	-1027	27	3446	-26.51	-31.71	-4.37
371	SLU 66	-1045	28	3503	-27.06	-32.32	-4.46
371	SLU 67	-1045	28	3505	-27.08	-32.33	-4.47
371	SLU 68	-1039	27	3485	-26.83	-32.13	-4.42
371	SLU 69	-1057	28	3542	-27.38	-32.73	-4.52
371	SLU 70	-1058	28	3543	-27.4	-32.74	-4.52
371	SLU 71	-1051	28	3521	-27.11	-32.52	-4.47
371	SLU 72	-1051	28	3522	-27.13	-32.53	-4.47
371	SLU 73	-1149	30	3852	-29.2	-35.52	-4.82
371	SLU 74	-1167	31	3910	-29.75	-36.13	-4.91
371	SLU 75	-1168	31	3911	-29.77	-36.14	-4.91
371	SLU 76	-1162	30	3891	-29.52	-35.94	-4.87
371	SLU 77	-1180	31	3948	-30.07	-36.54	-4.96
371	SLU 78	-1180	31	3950	-30.09	-36.55	-4.96
371	SLU 79	-1173	31	3927	-29.8	-36.33	-4.92
371	SLU 80	-1174	31	3929	-29.82	-36.34	-4.92
371	SLU 81	-1201	31	4024	-30.31	-37.14	-5
371	SLU 82	-1202	31	4025	-30.33	-37.15	-5.01
371	SLU 83	-1213	32	4063	-30.63	-37.55	-5.05
371	SLU 84	-1214	32	4064	-30.65	-37.56	-5.06
371	SLE RA 1	-766	20	2571	-19.78	-23.64	-3.26
371	SLE RA 2	-766	20	2572	-19.8	-23.65	-3.27
371	SLE RA 3	-778	21	2610	-20.17	-24.05	-3.33
371	SLE RA 4	-778	21	2611	-20.19	-24.06	-3.33
371	SLE RA 5	-774	20	2598	-20.02	-23.92	-3.3
371	SLE RA 6	-786	21	2636	-20.39	-24.33	-3.36
371	SLE RA 7	-787	21	2637	-20.4	-24.33	-3.36
371	SLE RA 8	-782	21	2622	-20.21	-24.19	-3.33
371	SLE RA 9	-782	21	2623	-20.22	-24.19	-3.33
371	SLE RA 10	-848	22	2843	-21.6	-26.19	-3.56
371	SLE RA 11	-860	23	2881	-21.97	-26.59	-3.62
371	SLE RA 12	-860	23	2882	-21.98	-26.6	-3.63
371	SLE RA 13	-856	22	2869	-21.81	-26.46	-3.6
371	SLE RA 14	-868	23	2907	-22.18	-26.87	-3.66
371	SLE RA 15	-868	23	2908	-22.2	-26.87	-3.66
371	SLE RA 16	-864	23	2893	-22	-26.73	-3.63
371	SLE RA 17	-864	23	2894	-22.01	-26.73	-3.63
371	SLE RA 18	-882	23	2958	-22.34	-27.27	-3.69
371	SLE RA 19	-883	23	2959	-22.35	-27.27	-3.69
371	SLE RA 20	-890	23	2984	-22.55	-27.54	-3.72
371	SLE RA 21	-891	23	2985	-22.57	-27.55	-3.72
371	SLE FR 1	-766	20	2571	-19.78	-23.64	-3.26
371	SLE FR 2	-766	20	2571	-19.78	-23.64	-3.26
371	SLE FR 3	-769	20	2581	-19.86	-23.75	-3.28
371	SLE FR 4	-801	21	2687	-20.55	-24.73	-3.39
371	SLE FR 5	-804	21	2697	-20.63	-24.84	-3.4
371	SLE FR 6	-824	22	2764	-21.06	-25.45	-3.47
371	SLE QP 1	-766	20	2571	-19.78	-23.64	-3.26
371	SLE QP 2	-801	21	2687	-20.55	-24.73	-3.39
371	SLD 1	-378	15	1248	-13.49	-11.81	-3.36
371	SLD 2	-378	15	1248	-13.49	-11.81	-3.36
371	SLD 3	-439	40	1470	-20.76	-13.83	-4.57
371	SLD 4	-439	40	1470	-20.76	-13.83	-4.57
371	SLD 5	-581	-17	1918	-7.4	-17.78	-1.56
371	SLD 6	-581	-17	1918	-7.4	-17.78	-1.56
371	SLD 7	-785	63	2659	-31.63	-24.53	-5.57
371	SLD 8	-785	63	2659	-31.63	-24.53	-5.57
371	SLD 9	-816	-21	2714	-9.46	-24.93	-1.21
371	SLD 10	-816	-21	2714	-9.46	-24.93	-1.21
371	SLD 11	-1020	60	3456	-33.69	-31.67	-5.22
371	SLD 12	-1020	60	3456	-33.69	-31.67	-5.22
371	SLD 13	-1162	3	3903	-20.34	-35.62	-2.21
371	SLD 14	-1162	3	3903	-20.34	-35.62	-2.21
371	SLD 15	-1224	27	4126	-27.61	-37.65	-3.42
371	SLD 16	-1224	27	4126	-27.61	-37.65	-3.42
371	SLV 1	187	7	-676	-3.88	5.46	-3.32
371	SLV 2	187	7	-676	-3.88	5.46	-3.32
371	SLV 3	42	66	-147	-21.02	0.62	-6.17
371	SLV 4	42	66	-147	-21.02	0.62	-6.17
371	SLV 5	-285	-73	875	10.45	-8.33	0.95
371	SLV 6	-285	-73	875	10.45	-8.33	0.95
371	SLV 7	-768	124	2640	-46.68	-24.47	-8.54

Nodo	Cont.	Reazione a traslazione			Reazione a rotazione		
Ind.	N.br.	x	y	z	x	y	z
371	SLV 8	-768	124	2640	-46.68	-24.47	-8.54
371	SLV 9	-834	-82	2734	5.59	-24.99	1.76
371	SLV 10	-834	-82	2734	5.59	-24.99	1.76
371	SLV 11	-1317	115	4499	-51.54	-41.13	-7.73
371	SLV 12	-1317	115	4499	-51.54	-41.13	-7.73
371	SLV 13	-1643	-24	5520	-20.08	-50.07	-0.61
371	SLV 14	-1643	-24	5520	-20.08	-50.07	-0.61
371	SLV 15	-1788	36	6050	-37.21	-54.91	-3.46
371	SLV 16	-1788	36	6050	-37.21	-54.91	-3.46
372	SLU 1	-13	-939	3685	30.84	-1.9	-0.45
372	SLU 2	-13	-942	3700	30.94	-1.91	-0.46
372	SLU 3	-13	-961	3770	31.64	-1.95	-0.47
372	SLU 4	-13	-963	3779	31.7	-1.96	-0.47
372	SLU 5	-13	-953	3739	31.32	-1.94	-0.46
372	SLU 6	-13	-971	3809	32.02	-1.98	-0.47
372	SLU 7	-13	-973	3818	32.08	-1.99	-0.47
372	SLU 8	-13	-959	3763	31.6	-1.95	-0.47
372	SLU 9	-13	-961	3772	31.66	-1.96	-0.47
372	SLU 10	-15	-1066	4169	35.39	-2.22	-0.53
372	SLU 11	-15	-1085	4239	36.09	-2.27	-0.54
372	SLU 12	-15	-1087	4248	36.15	-2.27	-0.54
372	SLU 13	-15	-1076	4208	35.77	-2.25	-0.54
372	SLU 14	-15	-1095	4278	36.47	-2.29	-0.55
372	SLU 15	-15	-1097	4287	36.53	-2.3	-0.55
372	SLU 16	-15	-1083	4232	36.05	-2.27	-0.54
372	SLU 17	-15	-1085	4241	36.11	-2.27	-0.54
372	SLU 18	-16	-1115	4354	37.2	-2.35	-0.56
372	SLU 19	-16	-1117	4363	37.26	-2.35	-0.56
372	SLU 20	-16	-1125	4393	37.58	-2.37	-0.57
372	SLU 21	-16	-1128	4403	37.64	-2.38	-0.57
372	SLU 22	-15	-1058	4137	35.09	-2.19	-0.52
372	SLU 23	-15	-1061	4153	35.19	-2.2	-0.52
372	SLU 24	-15	-1080	4223	35.89	-2.25	-0.54
372	SLU 25	-15	-1082	4232	35.95	-2.25	-0.54
372	SLU 26	-15	-1072	4192	35.57	-2.23	-0.53
372	SLU 27	-15	-1090	4262	36.27	-2.27	-0.54
372	SLU 28	-15	-1092	4271	36.33	-2.28	-0.54
372	SLU 29	-15	-1078	4216	35.85	-2.24	-0.53
372	SLU 30	-15	-1080	4225	35.91	-2.25	-0.54
372	SLU 31	-17	-1185	4621	39.65	-2.51	-0.6
372	SLU 32	-17	-1204	4691	40.34	-2.56	-0.61
372	SLU 33	-17	-1206	4701	40.41	-2.56	-0.61
372	SLU 34	-17	-1195	4660	40.03	-2.54	-0.6
372	SLU 35	-17	-1214	4731	40.72	-2.58	-0.61
372	SLU 36	-17	-1216	4740	40.79	-2.59	-0.62
372	SLU 37	-17	-1202	4684	40.3	-2.56	-0.61
372	SLU 38	-17	-1204	4693	40.36	-2.56	-0.61
372	SLU 39	-18	-1234	4807	41.45	-2.64	-0.63
372	SLU 40	-18	-1236	4816	41.51	-2.64	-0.63
372	SLU 41	-18	-1244	4846	41.83	-2.66	-0.63
372	SLU 42	-18	-1247	4855	41.89	-2.67	-0.63
372	SLU 43	-16	-1180	4635	38.63	-2.37	-0.57
372	SLU 44	-16	-1183	4650	38.73	-2.38	-0.57
372	SLU 45	-17	-1202	4720	39.43	-2.43	-0.58
372	SLU 46	-17	-1204	4729	39.49	-2.43	-0.58
372	SLU 47	-16	-1193	4689	39.11	-2.41	-0.58
372	SLU 48	-17	-1212	4759	39.81	-2.45	-0.59
372	SLU 49	-17	-1214	4768	39.87	-2.46	-0.59
372	SLU 50	-17	-1200	4713	39.39	-2.43	-0.58
372	SLU 51	-17	-1202	4722	39.45	-2.43	-0.58
372	SLU 52	-18	-1307	5119	43.19	-2.7	-0.64
372	SLU 53	-19	-1325	5189	43.88	-2.74	-0.65
372	SLU 54	-19	-1328	5198	43.95	-2.74	-0.65
372	SLU 55	-18	-1317	5158	43.57	-2.72	-0.65
372	SLU 56	-19	-1336	5228	44.26	-2.76	-0.66
372	SLU 57	-19	-1338	5237	44.33	-2.77	-0.66
372	SLU 58	-19	-1324	5182	43.84	-2.74	-0.65
372	SLU 59	-19	-1326	5191	43.9	-2.74	-0.65
372	SLU 60	-19	-1356	5305	44.99	-2.82	-0.67
372	SLU 61	-19	-1358	5314	45.05	-2.82	-0.67
372	SLU 62	-19	-1366	5344	45.37	-2.84	-0.68
372	SLU 63	-19	-1368	5353	45.43	-2.85	-0.68
372	SLU 64	-18	-1298	5088	42.88	-2.66	-0.64
372	SLU 65	-18	-1302	5103	42.99	-2.67	-0.64
372	SLU 66	-18	-1321	5173	43.68	-2.72	-0.65
372	SLU 67	-18	-1323	5182	43.75	-2.72	-0.65
372	SLU 68	-18	-1312	5142	43.37	-2.7	-0.64
372	SLU 69	-19	-1331	5212	44.06	-2.74	-0.65
372	SLU 70	-19	-1333	5221	44.12	-2.75	-0.66
372	SLU 71	-18	-1319	5166	43.64	-2.72	-0.65
372	SLU 72	-18	-1321	5175	43.7	-2.72	-0.65
372	SLU 73	-20	-1426	5572	47.44	-2.99	-0.71
372	SLU 74	-20	-1444	5642	48.14	-3.03	-0.72
372	SLU 75	-20	-1446	5651	48.2	-3.03	-0.72
372	SLU 76	-20	-1436	5611	47.82	-3.01	-0.72
372	SLU 77	-21	-1455	5681	48.52	-3.05	-0.73
372	SLU 78	-21	-1457	5690	48.58	-3.06	-0.73
372	SLU 79	-20	-1443	5635	48.1	-3.03	-0.72
372	SLU 80	-20	-1445	5644	48.16	-3.03	-0.72
372	SLU 81	-21	-1475	5757	49.25	-3.11	-0.74

Nodo	Cont.	Reazione a traslazione			Reazione a rotazione		
Ind.	N.br.	x	y	z	x	y	z
372	SLU 82	-21	-1477	5766	49.31	-3.11	-0.74
372	SLU 83	-21	-1485	5796	49.62	-3.13	-0.75
372	SLU 84	-21	-1487	5805	49.69	-3.14	-0.75
372	SLE RA 1	-14	-973	3814	32.05	-1.99	-0.47
372	SLE RA 2	-14	-975	3824	32.12	-1.99	-0.48
372	SLE RA 3	-14	-988	3871	32.59	-2.02	-0.48
372	SLE RA 4	-14	-989	3877	32.63	-2.02	-0.48
372	SLE RA 5	-14	-982	3850	32.37	-2.01	-0.48
372	SLE RA 6	-14	-994	3897	32.84	-2.04	-0.49
372	SLE RA 7	-14	-996	3903	32.88	-2.04	-0.49
372	SLE RA 8	-14	-986	3866	32.56	-2.02	-0.48
372	SLE RA 9	-14	-988	3872	32.6	-2.02	-0.48
372	SLE RA 10	-15	-1057	4137	35.09	-2.2	-0.52
372	SLE RA 11	-15	-1070	4183	35.55	-2.23	-0.53
372	SLE RA 12	-15	-1071	4189	35.6	-2.23	-0.53
372	SLE RA 13	-15	-1064	4163	35.34	-2.22	-0.53
372	SLE RA 14	-15	-1077	4209	35.81	-2.25	-0.54
372	SLE RA 15	-15	-1078	4216	35.85	-2.25	-0.54
372	SLE RA 16	-15	-1069	4179	35.53	-2.23	-0.53
372	SLE RA 17	-15	-1070	4185	35.57	-2.23	-0.53
372	SLE RA 18	-15	-1090	4260	36.29	-2.28	-0.54
372	SLE RA 19	-15	-1092	4267	36.34	-2.29	-0.54
372	SLE RA 20	-16	-1097	4287	36.55	-2.3	-0.55
372	SLE RA 21	-16	-1099	4293	36.59	-2.3	-0.55
372	SLE FR 1	-14	-973	3814	32.05	-1.99	-0.47
372	SLE FR 2	-14	-973	3816	32.07	-1.99	-0.47
372	SLE FR 3	-14	-975	3824	32.15	-1.99	-0.48
372	SLE FR 4	-14	-1008	3950	33.34	-2.08	-0.5
372	SLE FR 5	-14	-1011	3958	33.43	-2.08	-0.5
372	SLE FR 6	-15	-1032	4037	34.17	-2.13	-0.51
372	SLE QP 1	-14	-973	3814	32.05	-1.99	-0.47
372	SLE QP 2	-14	-1008	3948	33.33	-2.07	-0.5
372	SLD 1	-2	-1030	3994	34.95	7.83	1.36
372	SLD 2	-2	-1030	3994	34.95	7.83	1.36
372	SLD 3	-9	-1274	5053	41.66	7.06	1.18
372	SLD 4	-9	-1274	5053	41.66	7.06	1.18
372	SLD 5	1	-644	2354	23.65	2.07	0.33
372	SLD 6	1	-644	2354	23.65	2.07	0.33
372	SLD 7	-24	-1458	5887	45.99	-0.5	-0.27
372	SLD 8	-24	-1458	5887	45.99	-0.5	-0.27
372	SLD 9	-5	-558	2009	20.66	-3.65	-0.72
372	SLD 10	-5	-558	2009	20.66	-3.65	-0.72
372	SLD 11	-29	-1372	5542	43.01	-6.22	-1.32
372	SLD 12	-29	-1372	5542	43.01	-6.22	-1.32
372	SLD 13	-19	-742	2843	24.99	-11.21	-2.17
372	SLD 14	-19	-742	2843	24.99	-11.21	-2.17
372	SLD 15	-27	-986	3902	31.7	-11.98	-2.35
372	SLD 16	-27	-986	3902	31.7	-11.98	-2.35
372	SLV 1	16	-1052	4019	36.96	21.11	3.84
372	SLV 2	16	-1052	4019	36.96	21.11	3.84
372	SLV 3	-2	-1642	6587	53.1	19.29	3.41
372	SLV 4	-2	-1642	6587	53.1	19.29	3.41
372	SLV 5	22	-126	74	9.94	7.64	1.46
372	SLV 6	22	-126	74	9.94	7.64	1.46
372	SLV 7	-38	-2093	8635	63.74	1.58	0.02
372	SLV 8	-38	-2093	8635	63.74	1.58	0.02
372	SLV 9	10	77	-739	2.91	-5.72	-1.01
372	SLV 10	10	77	-739	2.91	-5.72	-1.01
372	SLV 11	-50	-1890	7822	56.71	-11.79	-2.45
372	SLV 12	-50	-1890	7822	56.71	-11.79	-2.45
372	SLV 13	-26	-374	1308	13.55	-23.44	-4.4
372	SLV 14	-26	-374	1308	13.55	-23.44	-4.4
372	SLV 15	-44	-964	3877	29.69	-25.26	-4.83
372	SLV 16	-44	-964	3877	29.69	-25.26	-4.83

1.3 Risposta modale

Modo: *identificativo del modo di vibrare.*
Periodo: *periodo. [s]*
Massa X: *massa partecipante in direzione globale X. Il valore è adimensionale.*
Massa Y: *massa partecipante in direzione globale Y. Il valore è adimensionale.*
Massa Z: *massa partecipante in direzione globale Z. Il valore è adimensionale.*
Massa rot. X: *massa rotazionale partecipante attorno la direzione globale X. Il valore è adimensionale.*
Massa rot. Y: *massa rotazionale partecipante attorno la direzione globale Y. Il valore è adimensionale.*
Massa rot. Z: *massa rotazionale partecipante attorno la direzione globale Z. Il valore è adimensionale.*
Massa sX: *massa partecipante in direzione Sisma X. Il valore è adimensionale.*
Massa sY: *massa partecipante in direzione Sisma Y. Il valore è adimensionale.*

Totale masse partecipanti:

Traslazione X: 0.906233
Traslazione Y: 0.930788
Traslazione Z: 0
Rotazione X: 0.843417

Rotazione Y: 0.912509
Rotazione Z: 0.727068

Modo	Periodo	Massa X	Massa Y	Massa Z	Massa rot. X	Massa rot. Y	Massa rot. Z	Massa sX	Massa sY
1	3.009008155	0.000000316	0.016167818	0	0.018768388	0.000000382	0.011028005	0.000000316	0.016167818
2	2.699854832	0.000000001	0.000714358	0	0.000552382	0.000000013	0.000485568	0.000000001	0.000714358
3	2.283878691	0	0.001118042	0	0.0003498	0.000000001	0.00076837	0	0.001118042
4	1.936473985	0.000000009	0.000112413	0	0.000021384	0.000000007	0.000073975	0.000000009	0.000112413
5	1.880459483	0.000008578	0.014832533	0	0.01389221	0.000008541	0.032711451	0.000008578	0.014832533
6	1.86038233	0.000024913	0.015464903	0	0.014274291	0.000022231	0.000636829	0.000024913	0.015464903
7	1.556010503	0.000000487	0.00021208	0	0.000236166	0.000000572	0.000082713	0.000000487	0.00021208
8	1.494210083	0.000234753	0.008190703	0	0.008216011	0.00031836	0.000275592	0.000234753	0.008190703
9	1.449068997	0.000333206	0.014526098	0	0.01502254	0.000451344	0.028634755	0.000333206	0.014526098
10	1.409002967	0.000000003	0.005084063	0	0.000086775	0.000000008	0.003553433	0.000000003	0.005084063
11	1.390135615	0.000003528	0.00000276	0	0.001892727	0.00000016	0.000015216	0.000003528	0.00000276
12	1.387068935	0.000008393	0.000005173	0	0.001878126	0.000003347	0.000002223	0.000008393	0.000005173
13	1.34266112	0.004395068	0.016012151	0	0.014428615	0.005922648	0.001428856	0.004395068	0.016012151
14	1.316979357	0.005252108	0.005268525	0	0.004223247	0.007752784	0.007440467	0.005252108	0.005268525
15	1.303374042	0.000263432	0.012241862	0	0.018740888	0.001681551	0.000234305	0.000263432	0.012241862
16	1.258387953	0.000132791	0.008273999	0	0.014933735	0.000094688	0.018447959	0.000132791	0.008273999
17	1.247651067	0.007590413	0.018596656	0	0.013684903	0.004707231	0.000031087	0.007590413	0.018596656
18	1.215110522	0.003408918	0.032502409	0	0.030893772	0.002379544	0.071188487	0.003408918	0.032502409
19	1.206852962	0.005682941	0.000677005	0	0.000003032	0.001886911	0.000001538	0.005682941	0.000677005
20	1.187656522	0.001308171	0.000715465	0	0.000004896	0.001275078	0.001273334	0.001308171	0.000715465
21	1.17348315	0.007650821	0.001179741	0	0.000238776	0.006606509	0.003624069	0.007650821	0.001179741
22	1.133223855	0.002864796	0.000169099	0	0.000082691	0.006652926	0.000000284	0.002864796	0.000169099
23	1.055747819	0.00097827	0.000075373	0	0.001382833	0.000325672	0.000277425	0.00097827	0.000075373
24	1.045318591	0.000003544	0.002451328	0	0.002163954	0.00007995	0.001945898	0.000003544	0.002451328
25	0.987861276	0.000403995	0.001896597	0	0.00241229	0.000001336	0.004448974	0.000403995	0.001896597
26	0.982483124	0.000250214	0.00520318	0	0.002005959	0.000019171	0.003063631	0.000250214	0.00520318
27	0.922597138	0.000583264	0.000889962	0	0.000512422	0.000151729	0.000336619	0.000583264	0.000889962
28	0.893245759	0.000028197	0.052886235	0	0.057020664	0.000017581	0.039076159	0.000028197	0.052886235
29	0.828821694	0.000263906	0.008621053	0	0.018295243	0.000187444	0.010156983	0.000263906	0.008621053
30	0.807213309	0.0144648	0.001537503	0	0.001865465	0.012177837	0.003656841	0.0144648	0.001537503
31	0.767400446	0.036140592	0.000019476	0	0.000011967	0.034431794	0.000371192	0.036140592	0.000019476
32	0.725671236	0.011160659	0.022121924	0	0.016702448	0.009636455	0.02275071	0.011160659	0.022121924
33	0.710402972	0.006010353	0.007904837	0	0.004705804	0.00241232	0.004753015	0.006010353	0.007904837
34	0.671555805	0.000306301	0.067675719	0	0.067439647	0.000649047	0.040846201	0.000306301	0.067675719
35	0.598186591	0.01658109	0.000016369	0	0.000002055	0.014144871	0.000046948	0.01658109	0.000016369
36	0.538449968	0.000364283	0.033019254	0	0.003057665	0.000475533	0.020153614	0.000364283	0.033019254
37	0.532612401	0.010856866	0.000846392	0	0.000000791	0.006734438	0.000684548	0.010856866	0.000846392
38	0.467942884	0.000063537	0.043770012	0	0.019642208	0.000109247	0.030009319	0.000063537	0.043770012
39	0.429483979	0.020879959	0.000221196	0	0.00000591	0.008901352	0.000575926	0.020879959	0.000221196
40	0.370497159	0.000191708	0.066449806	0	0.03687034	0.000070037	0.049401642	0.000191708	0.066449806
41	0.336184349	0.022122436	0.00151844	0	0.001657428	0.012503738	0.000085672	0.022122436	0.00151844
42	0.267454994	0.000071992	0.131050632	0	0.164307054	0.000138938	0.08962082	0.000071992	0.131050632
43	0.234337582	0.082268878	0.000958902	0	0.001487812	0.087754018	0.001714834	0.082268878	0.000958902
44	0.192474522	0.000644567	0.18188739	0	0.238458436	0.000533895	0.121828311	0.000644567	0.18188739
45	0.170240821	0.497927234	0.000075989	0	0.000067843	0.66801689	0.001502066	0.497927234	0.000075989
46	0.093540705	0.000611446	0.126691069	0	0.030576998	0.000430321	0.09096382	0.000611446	0.126691069
47	0.076510674	0.143589263	0.000307522	0	0.000000109	0.012113161	0.006480939	0.143589263	0.000307522
48	0.030058054	0.000019594	0.000065296	0	0.000005157	0.000000574	0.000110354	0.000019594	0.000065296
49	0.026136193	0.000010167	0.000011152	0	0.00030209	0.00003439	0.000116626	0.000010167	0.000011152
50	0.019763878	0.000272557	0.000548032	0	0.000031137	0.000691927	0.000150563	0.000272557	0.000548032

1.4 Equilibrio globale forze

Contributo: Nome attribuito al sistema risultante.
Fx: Componente X di forza del sistema risultante. [daN]
Fy: Componente Y di forza del sistema risultante. [daN]
Fz: Componente Z di forza del sistema risultante. [daN]
*Mx: Componente di momento attorno l'asse X del sistema risultante. [daN*m]*
*My: Componente di momento attorno l'asse Y del sistema risultante. [daN*m]*
*Mz: Componente di momento attorno l'asse Z del sistema risultante. [daN*m]*

Bilancio in condizione di carico: Pesi strutturali

Contributo	Fx	Fy	Fz	Mx	My	Mz
Forze applicate	-251.488	-20.847	-1309031.758	-1426154.13	-16318266.08	250.18
Reazioni	251.488	20.847	1309031.758	1426154.13	16318266.08	-250.18
P-Delta	0	0	0	0	0	0
Totale	0	0	0	0	0	0

Bilancio in condizione di carico: Permanenti portati

Contributo	Fx	Fy	Fz	Mx	My	Mz
Forze applicate	0	0	-280711.057	-391041.12	-3482446.49	0
Reazioni	0	0	280711.057	391041.12	3482446.49	0
P-Delta	0	0	0	0	0	0
Totale	0	0	0	0	0	0

Bilancio in condizione di carico: Variabile A

Contributo	Fx	Fy	Fz	Mx	My	Mz
Forze applicate	0	0	-208780.407	-252669.8	-2581487.38	0
Reazioni	0	0	208780.407	252669.8	2581487.38	0
P-Delta	0	0	0	0	0	0
Totale	0	0	0	0	0	0

Bilancio in condizione di carico: Neve

Contributo	Fx	Fy	Fz	Mx	My	Mz
Forze applicate	0	0	-34366.083	-66215.2	-430753.73	0
Reazioni	0	0	34366.083	66215.2	430753.73	0
P-Delta	0	0	0	0	0	0
Totale	0	0	0	0	0	0

Bilancio in condizione di carico: Variabile H

Contributo	Fx	Fy	Fz	Mx	My	Mz
Forze applicate	0	0	-26345.952	-46833.03	-328235.56	0
Reazioni	0	0	26345.952	46833.03	328235.56	0
P-Delta	0	0	0	0	0	0
Totale	0	0	0	0	0	0

Bilancio in condizione di carico: Vento

Contributo	Fx	Fy	Fz	Mx	My	Mz
Forze applicate	0.122	-3084.216	0	25239.23	0.99	38242.71
Reazioni	-0.122	3084.216	0	-25239.23	-0.99	-38242.71
P-Delta	0	0	0	0	0	0
Totale	0	0	0	0	0	0

Bilancio in condizione di carico: Sisma X SLV

Contributo	Fx	Fy	Fz	Mx	My	Mz
Forze applicate	492515.891	0	0	0	5248355.12	-596323.44
Reazioni	-492515.891	0	0	0	-5248355.12	596323.44
P-Delta	0	0	0	0	0	0
Totale	0	0	0	0	0	0

Bilancio in condizione di carico: Sisma Y SLV

Contributo	Fx	Fy	Fz	Mx	My	Mz
Forze applicate	0	492515.891	0	-5248355.12	0	-6190381
Reazioni	0	-492515.891	0	5248355.12	0	6190381
P-Delta	0	0	0	0	0	0
Totale	0	0	0	0	0	0

Bilancio in condizione di carico: Sisma X SLD

Contributo	Fx	Fy	Fz	Mx	My	Mz
Forze applicate	210596.013	0	0	0	2244156.35	-254983.32
Reazioni	-210596.013	0	0	0	-2244156.35	254983.32
P-Delta	0	0	0	0	0	0
Totale	0	0	0	0	0	0

Bilancio in condizione di carico: Sisma Y SLD

Contributo	Fx	Fy	Fz	Mx	My	Mz
Forze applicate	0	210596.013	0	-2244156.35	0	-2646959.39
Reazioni	0	-210596.013	0	2244156.35	0	2646959.39
P-Delta	0	0	0	0	0	0
Totale	0	0	0	0	0	0

Bilancio in condizione di carico: Rig Ux

Contributo	Fx	Fy	Fz	Mx	My	Mz
Forze applicate	0	0	0	0	0	0
Reazioni	0	0	0	0	0	0
P-Delta	0	0	0	0	0	0
Totale	0	0	0	0	0	0

Bilancio in condizione di carico: Rig Uy

Contributo	Fx	Fy	Fz	Mx	My	Mz
Forze applicate	0	0	0	0	0	0
Reazioni	0	0	0	0	0	0
P-Delta	0	0	0	0	0	0
Totale	0	0	0	0	0	0

Bilancio in condizione di carico: Rig Rz

Contributo	Fx	Fy	Fz	Mx	My	Mz
Forze applicate	0	0	0	0	0	0
Reazioni	0	0	0	0	0	0
P-Delta	0	0	0	0	0	0
Totale	0	0	0	0	0	0

1.5 Risposta di spettro

Spettro: condizione elementare corrispondente allo spettro.
N.b.: nome breve della condizione elementare.
Fx: componente della forza lungo l'asse X. [daN]
Fy: componente della forza lungo l'asse Y. [daN]
Fz: componente della forza lungo l'asse Z. [daN]
*Mx: componente della coppia attorno all'asse X. [daN*m]*
*My: componente della coppia attorno all'asse Y. [daN*m]*
*Mz: componente della coppia attorno all'asse Z. [daN*m]*
Max X: massima reazione lungo l'asse X.
Valore: valore massimo della reazione. [daN]
Angolo: angolo d'ingresso del sisma che provoca il valore massimo della reazione. [deg]

Max Y: massima reazione lungo l'asse Y.
Valore: valore massimo della reazione. [daN]
Angolo: angolo d'ingresso del sisma che provoca il valore massimo della reazione. [deg]
Max Z: massima reazione lungo l'asse Z.
Valore: valore massimo della reazione. [daN]
Angolo: angolo d'ingresso del sisma che provoca il valore massimo della reazione. [deg]

Spettro	Fx	Fy	Fz	Mx	My	Mz	Max X		Max Y		Max Z	
N.b.							Valore	Angolo	Valore	Angolo	Valore	Angolo
SLV X	307842.58	9412.32	0	8.324E04	3.074E06	3.723E05	307842.58	179	172829.27	89	0	0
SLV Y	9412.32	172790.94	0	1.539E06	7.787E04	2.140E06	307842.58	179	172829.27	89	0	0
X SLD	131589.6	4007.24	0	3.537E04	1.314E06	1.595E05	131589.6	179	73116.28	89	0	0
Y SLD	4007.24	73099.23	0	6.522E05	32983.552	9.050E05	131589.6	179	73116.28	89	0	0

1.6 Annotazioni solutore

Informazioni: informazioni fornite dal solutore al termine del calcolo del modello.

Informazioni

1.7 Statistiche soluzione

Tipo di equazioni	Lineari
Tecnica di soluzione	Intel MKL PARDISO
Numero equazioni	105624
Elemento min. diagonale	691.76412724
Elemento max diagonale	3307428321.71296
Rapporto max/min	4781150.38273979
Elementi non nulli	4157881

2 Verifiche

2.1 Verifica regolarità strutturale

Le unità di misura elencate nel capitolo sono in [m, daN] ove non espressamente specificato.

Livello:
Descr: descrizione livello.
Quota: quota livello. [m]
Q: quota livello. [m]
Qinf: quota livello precedente. [m]
Comb: combinazione.
A1: a1 (Distribuzione masse).
A1n: a1 numeratore (distanza tra centro massa vs. centro rigidezza [se presente] o centro dell'ingombro del piano). [m]
A1d: a1 denominatore (ingombro del piano nella medesima direzione [x o y globale]). [m]
A1r: a1 rapporto (distanza centro massa/rigidezza su ingombro del piano).
A2: a2 (Distribuzione rigidezze).
A2n: a2 numeratore (rigidezza max [x o y globale]).
A2d: a2 denominatore (rigidezza min [x o y globale]).
A2r: a2 rapporto (rigidezza max/min).
A3: a3 (Forma compatta).
A3n: a3 numeratore (area convessa). [m²]
A3d: a3 denominatore (area piano). [m²]
A3r: a3 rapporto (area convessa/area piano).
B: b (Rapporto lati).
Bn: b numeratore (lato max [x o y globale]). [m]
Bd: b denominatore (lato min [x o y globale]). [m]
Br: b rapporto (lato max/min).
C: c (Rapporto rigidezze piano).
Cn: c numeratore (rigidezza elementi verticali).
Cd: c denominatore (rigidezza piano).
Cr: c rapporto (rigidezza elementi verticali/rigidezza piano).
E1: e1 (Variazione masse).
E1n: e1 numeratore (massa max). [daN]
E1d: e1 denominatore (massa min). [daN]
E1r: e1 rapporto (massa max/min).
E2: e2 (Riduzione rigidezze).

E2n: e2 numeratore (rigidezza relativa alla traslazione KUmax). [daN/m]
E2d: e2 denominatore (rigidezza relativa alla traslazione KUmin). [daN/m]
E2r: e2 rapporto (variazione massima in decremento Kmax/Kmin).
E3: e3 (Incremento rigidezze).
E3n: e3 numeratore (rigidezza relativa alla traslazione KUmax). [daN/m]
E3d: e3 denominatore (rigidezza relativa alla traslazione KUmin). [daN/m]
E3r: e3 rapporto (variazione massima in incremento Kmax/Kmin).
F: f (Rapporto Capacità/Domanda).
Fn: f numeratore (rapporto capacità/domanda massimo [c/d max]). [daN]
Fd: f denominatore (rapporto capacità/domanda minimo [c/d min]). [daN]
Fr: f rapporto (variazione massima [rapporto (c/d max)/(c/d min)]).
G1: g1 (Rastremazione di piano).
G1n: g1 numeratore (L1). [m]
G1d: g1 denominatore (L2). [m]
G1r: g1 rapporto (L1/L2).
G2: g2 (Rastremazione totale).
G2n: g2 numeratore (L0). [m]
G2d: g2 denominatore (Li). [m]
G2r: g2 rapporto (L0/Li).
Capacità/Domanda in X:
VrdX: taglio resistente complessivo in direzione X. [daN]
VedX: taglio agente complessivo in direzione X). [daN]
|Rd/Ed|: |Rd/Ed| (rapporto capacità/domanda in termini di resistenza a taglio).
Capacità/Domanda in Y:
VrdY: taglio resistente complessivo in direzione Y. [daN]
VedY: taglio agente complessivo in direzione Y). [daN]

Verifica regolarità strutturale

Controllo regolarità edificio secondo D.M. 17-01-18 (N.T.C.) §7.2.1 - §C7.2.1

Avvertenze

La seguente procedura valuta la regolarità della costruzione secondo quanto indicato nelle NTC 2018 §7.2.1.
Tali valutazioni sono a carattere puramente informativo e vengono condotte sulla base del modello e delle verifiche presenti alla sua generazione, con le limitazioni indicate nella manualistica.
In ogni caso l'impostazione di regolarità della costruzione, in pianta ed elevazione, va indicata nelle preferenze di analisi dall'utente utilizzatore del software.

Sintesi dei risultati

Orizzontamenti considerati nella valutazione
Nessun livello di fondazione trovato
Livelli di elevazione considerati: Terra(L2), Rialzato(L3), Primo(L4), Secondo(L5), Terzo(L6), Sottotetto(L7), Colmo maggiore(L9),

Regolarità in pianta - NO
L'edificio risulta NON regolare in pianta, in base alle condizioni indicate in NTC 2018 §7.2.1
N.V. - Criterio A1 (Distribuzione masse) non valutabile al livello Terra
N.V. - Criterio A2 (Distribuzione rigidezze) non valutabile al livello Terra
No - Criterio A3 (Forma compatta) NON rispettato, con rapporto massimo 2729150.7/2540514.7=1.1 (limite=1,05) al livello Primo
Ok - Criterio B (Rapporto lati) rispettato, con rapporto massimo 2,13 (limite=4) al livello Colmo maggiore
No - Criterio C (Rapporto rigidezze piano) NON rispettato, con rapporto massimo > 999 (limite=0) al livello Terra

Regolarità in altezza - NO
L'edificio risulta NON regolare in altezza, in base alle condizioni indicate in NTC 2018 §7.2.1
Ok - Criterio D (Altezza elementi sismoresistenti) rispettato, con rapporto massimo 1 (limite=1,01)
No - Criterio E1 (Variazione masse) NON rispettato, con rapporto massimo 178193.9/16262.6=11 (limite=1) tra il livello Rialzato ed il precedente
N.V. - Criterio E2 (Riduzione rigidezze) non valutabile tra il livello Rialzato ed il precedente
N.V. - Criterio E3 (Incremento rigidezze) non valutabile tra il livello Rialzato ed il precedente
N.V. - Criterio F (Rapporto Capacità/Domanda) non valutabile tra il livello Colmo maggiore ed il precedente
No - Criterio G1 (Rastremazione di piano) NON rispettato, con rapporto massimo 1111.6/275.4=4 (limite=0,1) tra il livello Rialzato ed il precedente
No - Criterio G2 (Rastremazione totale) NON rispettato, con rapporto massimo 1111.6/275.4=4 (limite=0,3) tra il livello Rialzato ed il precedente

Valori per piano

Verifiche di regolarità in pianta

Livello		A1			A2			A3			B			C		
Descr	Quota	A1n	A1d	A1r	A2n	A2d	A2r	A3n	A3d	A3r	Bn	Bd	Br	Cn	Cd	Cr
Terra	0.58							15.013	29.2078	0.51	5.75	2.75	2.09	9999	1	9999
Rialzato	1.32							278.5415	260.3476	1.07	24.98	11.73	2.13	9999	1	9999
Primo	5							272.9151	254.0515	1.07	24.78	11.63	2.13	9999	1	9999
Secondo	8.55							272.9151	254.0517	1.07	24.78	11.63	2.13	9999	1	9999
Terzo	12.05							272.9151	254.0518	1.07	24.78	11.63	2.13	9999	1	9999
Sottotetto	15.15							274.0314	258.3081	1.06	24.84	11.64	2.13	9999	1	9999
Colmo maggiore	17.64							273.9711	257.8794	1.06	24.84	11.64	2.13	9999	1	9999

Verifiche di regolarità in elevazione

Rapporto di regolarità per la condizione D (Altezza elementi sismoresistenti): 17.06/17.02=0.01.

Livello			E1			E2			E3			F			G1			G2		
Descr	Q	Qinf	E1n	E1d	E1r	E2n	E2d	E2r	E3n	E3d	E3r	Fn	Fd	Fr	G1n	G1d	G1r	G2n	G2d	G2r
Rialzato	1.32	0.58	178194	16263	10.96							4.7	0.1	47.33	11.12	2.75	4.04	11.12	2.75	4.04

Livello			E1			E2			E3			F			G1			G2		
Descr	Q	Qinf	E1n	E1d	E1r	E2n	E2d	E2r	E3n	E3d	E3r	Fn	Fd	Fr	G1n	G1d	G1r	G2n	G2d	G2r
Primo	5	1.32	178194	136147	1.31							4.7	2.2	2.12	0.08	24.98	0	11	2.75	3.99
Secondo	8.55	5	136147	136147	1							2.9	2.1	1.38	0	24.78	0	11	2.75	3.99
Terzo	12.05	8.55	136147	136147	1							3.9	2.9	1.36	0	11.63	0	11	2.75	3.99
Sottotetto	15.15	12.05	136147	127634	1.07							11.5	3.8	3.04	0.03	24.78	0	11.02	2.75	4
Colmo maggiore	17.64	15.15	127634	68366	1.87										0	11.64	0	0	0.01	0

Dettaglio delle resistenze di piano a taglio (per valutazione punto F)

Livello			Capacità/Domanda in X			Capacità/Domanda in Y		
Descr	Q	Comb	VrdX	VedX	|Rd/Ed|	VrdY	VedY	|Rd/Ed|
Terra	0.58	SLV 1	15156	-302571	0.1	29733	-71467	0.4
Terra	0.58	SLV 2	15156	-302571	0.1	29733	-71467	0.4
Terra	0.58	SLV 3	12327	-302357	0	26946	65232	0.4
Terra	0.58	SLV 4	12327	-302357	0	26946	65232	0.4
Terra	0.58	SLV 5	17488	-91273	0.2	31017	-228784	0.1
Terra	0.58	SLV 6	17488	-91273	0.2	31017	-228784	0.1
Terra	0.58	SLV 7	9022	-90558	0.1	21702	226881	0.1
Terra	0.58	SLV 8	9022	-90558	0.1	21702	226881	0.1
Terra	0.58	SLV 9	17541	90055	0.2	31016	-226927	0.1
Terra	0.58	SLV 10	17541	90055	0.2	31016	-226927	0.1
Terra	0.58	SLV 11	8383	90770	0.1	21286	228738	0.1
Terra	0.58	SLV 12	8383	90770	0.1	21286	228738	0.1
Terra	0.58	SLV 13	15331	301853	0.1	28680	-65278	0.4
Terra	0.58	SLV 14	15331	301853	0.1	28680	-65278	0.4
Terra	0.58	SLV 15	12509	302068	0	25512	71422	0.4
Terra	0.58	SLV 16	12509	302068	0	25512	71422	0.4
Rialzato	1.32	SLV 1	352599	-355013	1	300144	-71132	4.2
Rialzato	1.32	SLV 2	352599	-355013	1	300144	-71132	4.2
Rialzato	1.32	SLV 3	335261	-333335	1	297192	87251	3.4
Rialzato	1.32	SLV 4	335261	-333335	1	297192	87251	3.4
Rialzato	1.32	SLV 5	351164	-139555	2.5	305878	-261557	1.2
Rialzato	1.32	SLV 6	351164	-139555	2.5	305878	-261557	1.2
Rialzato	1.32	SLV 7	317319	-67295	4.7	305998	266386	1.1
Rialzato	1.32	SLV 8	317319	-67295	4.7	305998	266386	1.1
Rialzato	1.32	SLV 9	353786	66802	5.3	306109	-266396	1.1
Rialzato	1.32	SLV 10	353786	66802	5.3	306109	-266396	1.1
Rialzato	1.32	SLV 11	325889	139062	2.3	304578	261547	1.2
Rialzato	1.32	SLV 12	325889	139062	2.3	304578	261547	1.2
Rialzato	1.32	SLV 13	353773	332842	1.1	292218	-87261	3.3
Rialzato	1.32	SLV 14	353773	332842	1.1	292218	-87261	3.3
Rialzato	1.32	SLV 15	350083	354520	1	292157	71122	4.1
Rialzato	1.32	SLV 16	350083	354520	1	292157	71122	4.1
Primo	5	SLV 1	201608	-300186	0.7	173136	-53323	3.2
Primo	5	SLV 2	201608	-300186	0.7	173136	-53323	3.2
Primo	5	SLV 3	193372	-298770	0.6	173426	46028	3.8
Primo	5	SLV 4	193372	-298770	0.6	173426	46028	3.8
Primo	5	SLV 5	223159	-92204	2.4	176336	-166670	1.1
Primo	5	SLV 6	223159	-92204	2.4	176336	-166670	1.1
Primo	5	SLV 7	194576	-87483	2.2	170311	164497	1
Primo	5	SLV 8	194576	-87483	2.2	170311	164497	1
Primo	5	SLV 9	220998	87482	2.5	177352	-164475	1.1
Primo	5	SLV 10	220998	87482	2.5	177352	-164475	1.1
Primo	5	SLV 11	190383	92203	2.1	167640	166692	1
Primo	5	SLV 12	190383	92203	2.1	167640	166692	1
Primo	5	SLV 13	201507	298769	0.7	173263	-46005	3.8
Primo	5	SLV 14	201507	298769	0.7	173263	-46005	3.8
Primo	5	SLV 15	192338	300185	0.6	165959	53345	3.1
Primo	5	SLV 16	192338	300185	0.6	165959	53345	3.1
Secondo	8.55	SLV 1	199142	-248784	0.8	149405	-40989	3.6
Secondo	8.55	SLV 2	199142	-248784	0.8	149405	-40989	3.6
Secondo	8.55	SLV 3	198366	-248601	0.8	150347	43693	3.4
Secondo	8.55	SLV 4	198366	-248601	0.8	150347	43693	3.4
Secondo	8.55	SLV 5	215343	-74914	2.9	149065	-140724	1.1
Secondo	8.55	SLV 6	215343	-74914	2.9	149065	-140724	1.1
Secondo	8.55	SLV 7	214637	-74303	2.9	148236	141551	1
Secondo	8.55	SLV 8	214637	-74303	2.9	148236	141551	1
Secondo	8.55	SLV 9	214842	74301	2.9	149452	-141529	1.1
Secondo	8.55	SLV 10	214842	74301	2.9	149452	-141529	1.1
Secondo	8.55	SLV 11	214102	74912	2.9	148762	140746	1.1
Secondo	8.55	SLV 12	214102	74912	2.9	148762	140746	1.1
Secondo	8.55	SLV 13	198090	248599	0.8	151183	-43671	3.5
Secondo	8.55	SLV 14	198090	248599	0.8	151183	-43671	3.5
Secondo	8.55	SLV 15	199791	248783	0.8	150851	41011	3.7
Secondo	8.55	SLV 16	199791	248783	0.8	150851	41011	3.7
Terzo	12.05	SLV 1	170304	-160559	1.1	124375	-28708	4.3
Terzo	12.05	SLV 2	170304	-160559	1.1	124375	-28708	4.3
Terzo	12.05	SLV 3	167705	-160364	1	125143	27687	4.5
Terzo	12.05	SLV 4	167705	-160364	1	125143	27687	4.5
Terzo	12.05	SLV 5	187595	-48464	3.9	122892	-94137	1.3
Terzo	12.05	SLV 6	187595	-48464	3.9	122892	-94137	1.3
Terzo	12.05	SLV 7	181369	-47814	3.8	122256	93846	1.3
Terzo	12.05	SLV 8	181369	-47814	3.8	122256	93846	1.3
Terzo	12.05	SLV 9	188070	47813	3.9	121979	-93824	1.3
Terzo	12.05	SLV 10	188070	47813	3.9	121979	-93824	1.3
Terzo	12.05	SLV 11	179722	48462	3.7	122331	94159	1.3
Terzo	12.05	SLV 12	179722	48462	3.7	122331	94159	1.3
Terzo	12.05	SLV 13	168157	160363	1	124259	-27665	4.5
Terzo	12.05	SLV 14	168157	160363	1	124259	-27665	4.5
Terzo	12.05	SLV 15	164939	160558	1	123012	28730	4.3

Livello			Capacità/Domanda in X			Capacità/Domanda in Y		
Descr	Q	Comb	VrdX	VedX	|Rd/Ed|	VrdY	VedY	|Rd/Ed|
Terzo	12.05	SLV 16	164939	160558	1	123012	28730	4.3
Sottotetto	15.15	SLV 1	127665	-48168	2.7	79176	-9226	8.6
Sottotetto	15.15	SLV 2	127665	-48168	2.7	79176	-9226	8.6
Sottotetto	15.15	SLV 3	120853	-46732	2.6	82173	9433	8.7
Sottotetto	15.15	SLV 4	120853	-46732	2.6	82173	9433	8.7
Sottotetto	15.15	SLV 5	131658	-16628	7.9	64321	-31061	2.1
Sottotetto	15.15	SLV 6	131658	-16628	7.9	64321	-31061	2.1
Sottotetto	15.15	SLV 7	136480	-11842	11.5	59973	31135	1.9
Sottotetto	15.15	SLV 8	136480	-11842	11.5	59973	31135	1.9
Sottotetto	15.15	SLV 9	130709	11842	11	67292	-31118	2.2
Sottotetto	15.15	SLV 10	130709	11842	11	67292	-31118	2.2
Sottotetto	15.15	SLV 11	134431	16628	8.1	63162	31078	2
Sottotetto	15.15	SLV 12	134431	16628	8.1	63162	31078	2
Sottotetto	15.15	SLV 13	116640	46732	2.5	74617	-9415	7.9
Sottotetto	15.15	SLV 14	116640	46732	2.5	74617	-9415	7.9
Sottotetto	15.15	SLV 15	111350	48168	2.3	85906	9244	9.3
Sottotetto	15.15	SLV 16	111350	48168	2.3	85906	9244	9.3

2.2 Verifica sismica globale

***Desc.**: descrizione.*
***Stato limite**: (muratura) V=Taglio; PF=Pressoflessione; PFFP=Pressoflessione fuori piano; R=Ribaltamento.*
***Molt.**: moltiplicatore minimo della azione sismica che produce lo stato limite.*
***Comb.**: combinazione.*
***PGA**: accelerazione al suolo.*
***iPGA (ζE)**: indicatore di rischio sismico in termini di PGA ovvero rapporto tra l'azione sismica massima sopportabile dall'elemento e l'azione sismica massima che si utilizzerebbe nel progetto nuovo (§C8.3).*
***TR**: tempo di ritorno.*
***(TR/TRrif)^.41**: indicatore di rischio sismico in termini di periodo di ritorno.*
***fa**: fattore di accelerazione.*
***Stato limite**: (muratura) V=Taglio; PF=Presso flessione; PFFP=Pressoflessione fuori piano; R=Ribaltamento.*
***Coeff.s.**: coefficiente minimo prodotto dallo stato limite.*
***Verifica**: stato di verifica.*
***Maschio**: maschio.*
***Stato limite**: (maschio muratura) V=Taglio; PF=Presso flessione; PFFP=Presso flessione fuori piano; R=Ribaltamento.*
***Trave**: trave di collegamento in muratura.*
***Stato limite**: (trave muratura) V=Taglio; F=Flessione.*
***S. L.**: stato limite di riferimento.*
***TR,C**: periodo di ritorno di capacità.*
***PGA,C**: accelerazione di aggancio di capacità.*
***TR,Rif**: periodo di ritorno di riferimento.*
***PGA,Rif**: accelerazione di aggancio di riferimento.*
***Tipo rottura**: tipo di rottura che fornisce il valore minimo degli elementi considerati.*
***PAM**: perdita media annua attesa.*
***Classe PAM**: classe di rischio PAM.*
***IS-V**: indice di sicurezza.*
***Classe IS-V**: classe di rischio IS-V.*

Verifica di elementi dotati di indicatori di rischio sismico mediante analisi con fattore q

Verifiche condotte secondo D.M. 17-01-18 (N.T.C.) § C8.7.1

Accelerazioni e tempi di ritorno

Accelerazione di aggancio SLO (ag/g_SLO*S*ST) PGA,SLOrif = 0.081
Accelerazione di aggancio SLD (ag/g_SLD*S*ST) PGA,SLDrif = 0.101
Accelerazione di aggancio SLV (ag/g_SLV*S*ST) PGA,SLVrif = 0.244
Tr,SLOrif = 30 anni
Tr,SLDrif = 50 anni
Tr,SLVrif = 475 anni

Moltiplicatori minimi delle condizioni sismiche

(Il valore di ζE corrisponde al valore di I.R. PGA secondo quanto riportato nella Circolare 7 21-01-19 §C8.3)

Rottura a taglio

Moltiplicatore: 0
Maschio 25
Lunghezza: 0.3; altezza: 2.99; spessore: 0.3; sezione a quota: -1.67
Combinazione SLV 1 N= -1776 V par.= 533 l'= 0.097 fvd= 16250 Vt scorrimento= 473 Vt fess. diag.= 0
Tempo di ritorno 0 anni
Indicatore iTr=(Tr/Tr,SLVrif)^.41 = 0
PGA 0
Indicatore iPGA=PGA/PGA,SLVrif = 0

Fattore di accelerazione fa = 0

Rottura a flessione

Moltiplicatore: 0
Maschio 61
Lunghezza: 0.133; altezza: 3.68; spessore: 0.28 sezione a quota 4.43
Combinazione SLV 1 N = -223 M = 42.42 σ0 = 0 fd = 143750 Mu = 0
Tempo di ritorno 0 anni
Indicatore iTr=(Tr/Tr,SLVrif)^.41 = 0
PGA 0
Indicatore iPGA=PGA/PGA,SLVrif = 0
Fattore di accelerazione fa = 0

Rottura a pressoflessione nel piano ortogonale

Moltiplicatore: 0.028
Maschio 239
Lunghezza: 0.285; altezza: 3.1; spessore: 0.14; sezione a quota: 13.6
Combinazione SLV 7 fd= 143750 Ta= 0.11 Wa= 252 N= -7 M= 0.47 Mc= 0.49
Tempo di ritorno 0 anni
Indicatore iTr=(Tr/Tr,SLVrif)^.41 = 0
PGA 0
Indicatore iPGA=PGA/PGA,SLVrif = 0
Fattore di accelerazione fa = 0

Rottura per meccanismi locali di collasso

Moltiplicatore: 0
Maschio 22
Lunghezza: 0.299; altezza: 2.99; spessore: 0.45 f.agg.= 0 a.lim.= 0
Combinazione SLV 1 N top= -420 N base= -4582 T orto= -263 α0= 0 M*= 103.8 e*= 0.889 a0*= 0
Tempo di ritorno 0 anni
Indicatore iTr=(Tr/Tr,SLVrif)^.41 = 0
PGA 0
Indicatore iPGA=PGA/PGA,SLVrif = 0
Fattore di accelerazione fa = 0

Indicatori minimi riferiti al solo materiale muratura

Desc.	Stato limite	Molt.	Comb.	PGA	iPGA (ζE)	TR	(TR/TRrif)^.41	fa
Maschio 61	PF	0	SLV 1	0	0	0	0	0
Maschio 25	V	0	SLV 1	0	0	0	0	0
Maschio 239	PFFP	0.028	SLV 7	0	0	0	0	0
Maschio 22	R	0	SLV 1	0	0	0	0	0
Trave di accoppiamento 22	PF	0	SLV 1	0	0	0	0	0
Trave di accoppiamento 1	V	0	SLV 1	0	0	0	0	0

Coefficienti di sicurezza riferiti al solo materiale muratura

Desc.	Stato limite	Coeff.s.	Comb.	Verifica
Maschio 1	PF SLU	7.525	SLU 81	Si
Maschio 1	V SLU	15.336	SLU 83	Si
Maschio 1	PF	2.578	SLV 9	Si
Maschio 1	V	1.524	SLV 9	Si
Maschio 1	PFFP	19.524	SLV 15	Si
Maschio 1	R	0.213	SLV 3	No
Maschio 2	PF SLU	7.703	SLU 48	Si
Maschio 2	V SLU	2.029	SLU 77	Si
Maschio 2	PF	1.807	SLV 13	Si
Maschio 2	V	0.748	SLV 13	No
Maschio 2	PFFP	10.188	SLV 9	Si
Maschio 2	R	0	SLV 10	No
Maschio 3	PF SLU	5.444	SLU 78	Si
Maschio 3	V SLU	2.243	SLU 77	Si
Maschio 3	PF	3.046	SLV 13	Si
Maschio 3	V	0.795	SLV 9	No
Maschio 3	PFFP	17.25	SLV 9	Si
Maschio 3	R	0.184	SLV 9	No
Maschio 4	PF SLU	0	SLU 73	No
Maschio 4	V SLU	0.906	SLU 83	No
Maschio 4	PF	1.008	SLV 5	Si
Maschio 4	V	0.362	SLV 11	No
Maschio 4	PFFP	20.066	SLV 9	Si
Maschio 4	R	0.255	SLV 5	No
Maschio 5	PF SLU	7.728	SLU 84	Si
Maschio 5	V SLU	3.403	SLU 84	Si
Maschio 5	PF	0	SLV 7	No
Maschio 5	V	0	SLV 7	No
Maschio 5	PFFP	10.754	SLV 15	Si
Maschio 5	R	0.044	SLV 13	No
Maschio 6	PF SLU	5.191	SLU 84	Si
Maschio 6	V SLU	23.6	SLU 70	Si
Maschio 6	PF	0	SLV 9	No
Maschio 6	V	0	SLV 9	No
Maschio 6	PFFP	12.986	SLV 5	Si
Maschio 6	R	0.115	SLV 9	No
Maschio 7	PF SLU	4.537	SLU 77	Si
Maschio 7	V SLU	2.591	SLU 77	Si
Maschio 7	PF	2.556	SLV 3	Si
Maschio 7	V	0.914	SLV 15	No

Desc.	Stato limite	Coeff.s.	Comb.	Verifica
Maschio 7	PFFP	11.651	SLV 11	Si
Maschio 7	R	0	SLV 1	No
Maschio 8	PF SLU	2.922	SLU 83	Si
Maschio 8	V SLU	4.136	SLU 81	Si
Maschio 8	PF	2.201	SLV 13	Si
Maschio 8	V	0.814	SLV 3	No
Maschio 8	PFFP	10.386	SLV 11	Si
Maschio 8	R	0	SLV 1	No
Maschio 9	PF SLU	1.048	SLU 84	Si
Maschio 9	V SLU	2.12	SLU 78	Si
Maschio 9	PF	1.47	SLV 9	Si
Maschio 9	V	0.601	SLV 13	No
Maschio 9	PFFP	23.382	SLV 7	Si
Maschio 9	R	0	SLV 1	No
Maschio 10	PF SLU	1.642	SLU 84	Si
Maschio 10	V SLU	1.257	SLU 84	Si
Maschio 10	PF	0	SLV 13	No
Maschio 10	V	0	SLV 13	No
Maschio 10	PFFP	31.951	SLV 7	Si
Maschio 10	R	0.143	SLV 13	No
Maschio 11	PF SLU	2.363	SLU 82	Si
Maschio 11	V SLU	1.977	SLU 83	Si
Maschio 11	PF	1.82	SLV 13	Si
Maschio 11	V	0.716	SLV 11	No
Maschio 11	PFFP	17.282	SLV 15	Si
Maschio 11	R	0.085	SLV 15	No
Maschio 12	PF SLU	2.895	SLU 5	Si
Maschio 12	V SLU	3.668	SLU 76	Si
Maschio 12	PF	0	SLV 14	No
Maschio 12	V	0	SLV 5	No
Maschio 12	PFFP	7.816	SLV 11	Si
Maschio 12	R	0	SLV 14	No
Maschio 13	PF SLU	2.175	SLU 44	Si
Maschio 13	V SLU	1.615	SLU 84	Si
Maschio 13	PF	0	SLV 12	No
Maschio 13	V	0	SLV 7	No
Maschio 13	PFFP	0	SLV 12	No
Maschio 13	R	0	SLV 12	No
Maschio 14	PF SLU	4.341	SLU 83	Si
Maschio 14	V SLU	2.673	SLU 83	Si
Maschio 14	PF	1.714	SLV 9	Si
Maschio 14	V	0.627	SLV 7	No
Maschio 14	PFFP	14.114	SLV 15	Si
Maschio 14	R	0.028	SLV 13	No
Maschio 15	PF SLU	6.494	SLU 83	Si
Maschio 15	V SLU	1.133	SLU 83	Si
Maschio 15	PF	2.268	SLV 7	Si
Maschio 15	V	0.893	SLV 9	No
Maschio 15	PFFP	27.252	SLV 7	Si
Maschio 15	R	0.507	SLV 13	No
Maschio 16	PF SLU	3.743	SLU 83	Si
Maschio 16	V SLU	1.56	SLU 83	Si
Maschio 16	PF	2.344	SLV 11	Si
Maschio 16	V	0.823	SLV 9	No
Maschio 16	PFFP	278.83	SLV 7	Si
Maschio 16	R	1.303	SLV 7	Si
Maschio 18	PF SLU	7.805	SLU 43	Si
Maschio 18	V SLU	2.965	SLU 76	Si
Maschio 18	PF	3.941	SLV 5	Si
Maschio 18	V	1.368	SLV 11	Si
Maschio 18	PFFP	65.773	SLV 1	Si
Maschio 18	R	0.55	SLV 13	No
Maschio 19	PF SLU	3.258	SLU 77	Si
Maschio 19	V SLU	0.937	SLU 83	No
Maschio 19	PF	1.649	SLV 3	Si
Maschio 19	V	0.607	SLV 1	No
Maschio 19	PFFP	21.071	SLV 15	Si
Maschio 19	R	0.229	SLV 1	No
Maschio 20	PF SLU	5.253	SLU 77	Si
Maschio 20	V SLU	6.542	SLU 78	Si
Maschio 20	PF	1.449	SLV 3	Si
Maschio 20	V	0.84	SLV 3	No
Maschio 20	PFFP	29.979	SLV 11	Si
Maschio 20	R	0	SLV 5	No
Maschio 21	PF SLU	0	SLU 78	No
Maschio 21	V SLU	13.052	SLU 70	Si
Maschio 21	PF	1.092	SLV 1	Si
Maschio 21	V	1.427	SLV 1	Si
Maschio 21	PFFP	35.978	SLV 3	Si
Maschio 21	R	0.013	SLV 5	No
Maschio 22	PF SLU	10.326	SLU 84	Si
Maschio 22	V SLU	11.526	SLU 84	Si
Maschio 22	PF	1.677	SLV 13	Si
Maschio 22	V	6.193	SLV 13	Si
Maschio 22	PFFP	35.133	SLV 9	Si
Maschio 22	R	0	SLV 1	No
Maschio 23	PF SLU	11.209	SLU 81	Si
Maschio 23	V SLU	8.909	SLU 73	Si
Maschio 23	PF	2.282	SLV 15	Si
Maschio 23	V	1.037	SLV 13	Si
Maschio 23	PFFP	29.974	SLV 13	Si

Desc.	Stato limite	Coeff.s.	Comb.	Verifica
Maschio 23	R	0.054	SLV 5	No
Maschio 24	PF SLU	3.855	SLU 83	Si
Maschio 24	V SLU	1.016	SLU 83	Si
Maschio 24	PF	1.609	SLV 15	Si
Maschio 24	V	0.59	SLV 15	No
Maschio 24	PFFP	17.167	SLV 7	Si
Maschio 24	R	0.263	SLV 15	No
Maschio 25	PF SLU	0.173	SLU 83	No
Maschio 25	V SLU	0.274	SLU 41	No
Maschio 25	PF	0	SLV 1	No
Maschio 25	V	0	SLV 1	No
Maschio 25	PFFP	20.719	SLV 15	Si
Maschio 25	R	0.167	SLV 1	No
Maschio 26	PF SLU	2.152	SLU 83	Si
Maschio 26	V SLU	13.897	SLU 83	Si
Maschio 26	PF	2.352	SLV 3	Si
Maschio 26	V	1.472	SLV 15	Si
Maschio 26	PFFP	21.888	SLV 7	Si
Maschio 26	R	0.155	SLV 7	No
Maschio 27	PF SLU	4.011	SLU 77	Si
Maschio 27	V SLU	7.169	SLU 49	Si
Maschio 27	PF	4.727	SLV 13	Si
Maschio 27	V	1.219	SLV 15	Si
Maschio 27	PFFP	14.401	SLV 9	Si
Maschio 27	R	0.041	SLV 5	No
Maschio 28	PF SLU	7.713	SLU 83	Si
Maschio 28	V SLU	4.57	SLU 84	Si
Maschio 28	PF	4.687	SLV 1	Si
Maschio 28	V	1.038	SLV 1	Si
Maschio 28	PFFP	11.948	SLV 9	Si
Maschio 28	R	0	SLV 5	No
Maschio 29	PF SLU	9.574	SLU 84	Si
Maschio 29	V SLU	10.174	SLU 77	Si
Maschio 29	PF	4.823	SLV 13	Si
Maschio 29	V	1.084	SLV 13	Si
Maschio 29	PFFP	12.959	SLV 5	Si
Maschio 29	R	0	SLV 5	No
Maschio 30	PF SLU	3.009	SLU 83	Si
Maschio 30	V SLU	3.864	SLU 83	Si
Maschio 30	PF	1.099	SLV 1	Si
Maschio 30	V	0.659	SLV 1	No
Maschio 30	PFFP	4.105	SLV 1	Si
Maschio 30	R	0	SLV 10	No
Maschio 31	PF SLU	8.528	SLU 84	Si
Maschio 31	V SLU	1.591	SLU 83	Si
Maschio 31	PF	3.06	SLV 11	Si
Maschio 31	V	1.098	SLV 5	Si
Maschio 31	PFFP	40.398	SLV 11	Si
Maschio 31	R	0.529	SLV 1	No
Maschio 32	PF SLU	3.469	SLU 84	Si
Maschio 32	V SLU	3.393	SLU 83	Si
Maschio 32	PF	2.146	SLV 11	Si
Maschio 32	V	1.325	SLV 5	Si
Maschio 32	PFFP	316.148	SLV 11	Si
Maschio 32	R	1.703	SLV 9	Si
Maschio 33	PF SLU	10.767	SLU 83	Si
Maschio 33	V SLU	2.699	SLU 76	Si
Maschio 33	PF	5.932	SLV 9	Si
Maschio 33	V	1.322	SLV 11	Si
Maschio 33	PFFP	40.792	SLV 13	Si
Maschio 33	R	0.404	SLV 3	No
Maschio 35	PF SLU	1.173	SLU 84	Si
Maschio 35	V SLU	0.646	SLU 84	No
Maschio 35	PF	1.11	SLV 11	Si
Maschio 35	V	0.602	SLV 11	No
Maschio 35	PFFP	21.639	SLV 9	Si
Maschio 35	R	0.285	SLV 3	No
Maschio 36	PF SLU	4.38	SLU 83	Si
Maschio 36	V SLU	3.122	SLU 83	Si
Maschio 36	PF	1.652	SLV 5	Si
Maschio 36	V	0.89	SLV 7	No
Maschio 36	PFFP	20.04	SLV 1	Si
Maschio 36	R	0.16	SLV 13	No
Maschio 37	PF SLU	2.133	SLU 52	Si
Maschio 37	V SLU	1.627	SLU 84	Si
Maschio 37	PF	0	SLV 8	No
Maschio 37	V	0	SLV 3	No
Maschio 37	PFFP	0	SLV 8	No
Maschio 37	R	0	SLV 8	No
Maschio 38	PF SLU	1.473	SLU 82	Si
Maschio 38	V SLU	3.415	SLU 83	Si
Maschio 38	PF	1.571	SLV 1	Si
Maschio 38	V	4.125	SLV 1	Si
Maschio 38	PFFP	17.165	SLV 15	Si
Maschio 38	R	0	SLV 11	No
Maschio 39	PF SLU	3.388	SLU 82	Si
Maschio 39	V SLU	2.263	SLU 73	Si
Maschio 39	PF	1.054	SLV 15	Si
Maschio 39	V	0.443	SLV 15	No
Maschio 39	PFFP	40.411	SLV 11	Si
Maschio 39	R	0.609	SLV 1	No

Desc.	Stato limite	Coeff.s.	Comb.	Verifica
Maschio 40	PF SLU	1.469	SLU 84	Si
Maschio 40	V SLU	3.126	SLU 82	Si
Maschio 40	PF	1.912	SLV 5	Si
Maschio 40	V	1.016	SLV 1	Si
Maschio 40	PFFP	1299.926	SLV 11	Si
Maschio 40	R	3.21	SLV 7	Si
Maschio 41	PF SLU	1.52	SLU 84	Si
Maschio 41	V SLU	2.794	SLU 74	Si
Maschio 41	PF	1.35	SLV 7	Si
Maschio 41	V	0.276	SLV 7	No
Maschio 41	PFFP	251.594	SLV 7	Si
Maschio 41	R	0	SLV 7	No
Maschio 42	PF SLU	4.547	SLU 31	Si
Maschio 42	V SLU	3.887	SLU 76	Si
Maschio 42	PF	1.552	SLV 7	Si
Maschio 42	V	0.927	SLV 7	No
Maschio 42	PFFP	6.756	SLV 7	Si
Maschio 42	R	0	SLV 5	No
Maschio 43	PF SLU	2.672	SLU 84	Si
Maschio 43	V SLU	3.294	SLU 83	Si
Maschio 43	PF	2.249	SLV 11	Si
Maschio 43	V	0.973	SLV 7	No
Maschio 43	PFFP	21.52	SLV 7	Si
Maschio 43	R	0.173	SLV 13	No
Maschio 44	PF SLU	2.143	SLU 83	Si
Maschio 44	V SLU	8.029	SLU 84	Si
Maschio 44	PF	1.221	SLV 9	Si
Maschio 44	V	0.864	SLV 9	No
Maschio 44	PFFP	24.178	SLV 9	Si
Maschio 44	R	0.166	SLV 15	No
Maschio 45	PF SLU	1.897	SLU 84	Si
Maschio 45	V SLU	7.663	SLU 82	Si
Maschio 45	PF	1.142	SLV 9	Si
Maschio 45	V	3.154	SLV 9	Si
Maschio 45	PFFP	15.734	SLV 9	Si
Maschio 45	R	0.235	SLV 1	No
Maschio 46	PF SLU	3.066	SLU 77	Si
Maschio 46	V SLU	5.384	SLU 79	Si
Maschio 46	PF	1.934	SLV 3	Si
Maschio 46	V	0.761	SLV 3	No
Maschio 46	PFFP	8.105	SLV 7	Si
Maschio 46	R	0	SLV 12	No
Maschio 47	PF SLU	9.216	SLU 48	Si
Maschio 47	V SLU	4.32	SLU 81	Si
Maschio 47	PF	1.134	SLV 7	Si
Maschio 47	V	0.328	SLV 7	No
Maschio 47	PFFP	6.034	SLV 7	Si
Maschio 47	R	0	SLV 12	No
Maschio 48	PF SLU	5.204	SLU 70	Si
Maschio 48	V SLU	2.01	SLU 77	Si
Maschio 48	PF	2.454	SLV 9	Si
Maschio 48	V	0.58	SLV 5	No
Maschio 48	PFFP	8.385	SLV 9	Si
Maschio 48	R	0.329	SLV 3	No
Maschio 49	PF SLU	15.858	SLU 48	Si
Maschio 49	V SLU	3.782	SLU 43	Si
Maschio 49	PF	1.537	SLV 1	Si
Maschio 49	V	0.762	SLV 3	No
Maschio 49	PFFP	5.539	SLV 5	Si
Maschio 49	R	0.152	SLV 5	No
Maschio 50	PF SLU	6.646	SLU 82	Si
Maschio 50	V SLU	24.858	SLU 2	Si
Maschio 50	PF	2.163	SLV 5	Si
Maschio 50	V	1.702	SLV 5	Si
Maschio 50	PFFP	16.242	SLV 1	Si
Maschio 50	R	0.321	SLV 13	No
Maschio 51	PF SLU	0	SLU 73	No
Maschio 51	V SLU	19.266	SLU 2	Si
Maschio 51	PF	1.991	SLV 9	Si
Maschio 51	V	1.177	SLV 7	Si
Maschio 51	PFFP	8.235	SLV 13	Si
Maschio 51	R	0.069	SLV 3	No
Maschio 52	PF SLU	1.584	SLU 83	Si
Maschio 52	V SLU	0.961	SLU 84	No
Maschio 52	PF	0	SLV 13	No
Maschio 52	V	0	SLV 13	No
Maschio 52	PFFP	0	SLV 9	No
Maschio 52	R	0	SLV 10	No
Maschio 53	PF SLU	1.288	SLU 83	Si
Maschio 53	V SLU	1.5	SLU 83	Si
Maschio 53	PF	0	SLV 9	No
Maschio 53	V	0	SLV 9	No
Maschio 53	PFFP	4.424	SLV 9	Si
Maschio 53	R	0.066	SLV 1	No
Maschio 54	PF SLU	1.32	SLU 83	Si
Maschio 54	V SLU	0.74	SLU 81	No
Maschio 54	PF	0	SLV 7	No
Maschio 54	V	0	SLV 7	No
Maschio 54	PFFP	3.317	SLV 11	Si
Maschio 54	R	0.069	SLV 3	No
Maschio 55	PF SLU	1.662	SLU 83	Si

Desc.	Stato limite	Coeff.s.	Comb.	Verifica
Maschio 55	V SLU	0.795	SLU 83	No
Maschio 55	PF	0	SLV 3	No
Maschio 55	V	0	SLV 3	No
Maschio 55	PFFP	1.129	SLV 7	Si
Maschio 55	R	0	SLV 12	No
Maschio 56	PF SLU	0	SLU 74	No
Maschio 56	V SLU	1.171	SLU 83	Si
Maschio 56	PF	0	SLV 13	No
Maschio 56	V	0	SLV 13	No
Maschio 56	PFFP	9.53	SLV 11	Si
Maschio 56	R	0.075	SLV 3	No
Maschio 57	PF SLU	0	SLU 1	No
Maschio 57	V SLU	2.537	SLU 83	Si
Maschio 57	PF	0	SLV 3	No
Maschio 57	V	0.618	SLV 5	No
Maschio 57	PFFP	7.11	SLV 9	Si
Maschio 57	R	0.071	SLV 3	No
Maschio 58	PF SLU	1.699	SLU 84	Si
Maschio 58	V SLU	2.99	SLU 84	Si
Maschio 58	PF	1.381	SLV 15	Si
Maschio 58	V	0.474	SLV 11	No
Maschio 58	PFFP	3.496	SLV 13	Si
Maschio 58	R	0.02	SLV 13	No
Maschio 59	PF SLU	0.876	SLU 83	No
Maschio 59	V SLU	1.937	SLU 83	Si
Maschio 59	PF	1.058	SLV 3	Si
Maschio 59	V	0.48	SLV 3	No
Maschio 59	PFFP	4.621	SLV 15	Si
Maschio 59	R	0.068	SLV 15	No
Maschio 60	PF SLU	1.053	SLU 84	Si
Maschio 60	V SLU	2.775	SLU 5	Si
Maschio 60	PF	0	SLV 11	No
Maschio 60	V	0	SLV 11	No
Maschio 60	PFFP	3.056	SLV 15	Si
Maschio 60	R	0.009	SLV 15	No
Maschio 61	PF SLU	0	SLU 1	No
Maschio 61	V SLU	0	SLU 1	No
Maschio 61	PF	0	SLV 14	No
Maschio 61	V	0	SLV 1	No
Maschio 61	PFFP	0	SLV 16	No
Maschio 61	R	0	SLV 16	No
Maschio 62	PF SLU	1.232	SLU 84	Si
Maschio 62	V SLU	0.512	SLU 84	No
Maschio 62	PF	0	SLV 3	No
Maschio 62	V	0	SLV 3	No
Maschio 62	PFFP	3.142	SLV 7	Si
Maschio 62	R	0.051	SLV 11	No
Maschio 63	PF SLU	0	SLU 74	No
Maschio 63	V SLU	5.737	SLU 73	Si
Maschio 63	PF	0	SLV 12	No
Maschio 63	V	0	SLV 1	No
Maschio 63	PFFP	4.056	SLV 13	Si
Maschio 63	R	0	SLV 12	No
Maschio 64	PF SLU	3.827	SLU 83	Si
Maschio 64	V SLU	1.78	SLU 81	Si
Maschio 64	PF	0	SLV 12	No
Maschio 64	V	0	SLV 11	No
Maschio 64	PFFP	1.934	SLV 11	Si
Maschio 64	R	0	SLV 12	No
Maschio 65	PF SLU	0	SLU 84	No
Maschio 65	V SLU	0	SLU 1	No
Maschio 65	PF	0	SLV 16	No
Maschio 65	V	0	SLV 1	No
Maschio 65	PFFP	0	SLV 16	No
Maschio 65	R	0	SLV 16	No
Maschio 66	PF SLU	1.212	SLU 83	Si
Maschio 66	V SLU	2.554	SLU 83	Si
Maschio 66	PF	2.158	SLV 11	Si
Maschio 66	V	0.375	SLV 7	No
Maschio 66	PFFP	4.634	SLV 9	Si
Maschio 66	R	0.021	SLV 3	No
Maschio 67	PF SLU	3.389	SLU 84	Si
Maschio 67	V SLU	1.202	SLU 83	Si
Maschio 67	PF	1.969	SLV 7	Si
Maschio 67	V	0.726	SLV 9	No
Maschio 67	PFFP	22.265	SLV 11	Si
Maschio 67	R	0.277	SLV 3	No
Maschio 68	PF SLU	11.665	SLU 83	Si
Maschio 68	V SLU	4.062	SLU 81	Si
Maschio 68	PF	2.604	SLV 11	Si
Maschio 68	V	0.974	SLV 7	No
Maschio 68	PFFP	24.227	SLV 11	Si
Maschio 68	R	0.35	SLV 1	No
Maschio 70	PF SLU	3.629	SLU 84	Si
Maschio 70	V SLU	3.556	SLU 76	Si
Maschio 70	PF	4.807	SLV 15	Si
Maschio 70	V	1.031	SLV 11	Si
Maschio 70	PFFP	18.802	SLV 3	Si
Maschio 70	R	0.152	SLV 3	No
Maschio 71	PF SLU	0	SLU 31	No
Maschio 71	V SLU	0.429	SLU 83	No

Desc.	Stato limite	Coeff.s.	Comb.	Verifica
Maschio 71	PF	0	SLV 9	No
Maschio 71	V	0	SLV 9	No
Maschio 71	PFFP	9.472	SLV 13	Si
Maschio 71	R	0	SLV 1	No
Maschio 72	PF SLU	2.776	SLU 84	Si
Maschio 72	V SLU	1.116	SLU 83	Si
Maschio 72	PF	0	SLV 5	No
Maschio 72	V	0	SLV 5	No
Maschio 72	PFFP	4.336	SLV 9	Si
Maschio 72	R	0.068	SLV 9	No
Maschio 73	PF SLU	9.183	SLU 83	Si
Maschio 73	V SLU	50.755	SLU 46	Si
Maschio 73	PF	1.816	SLV 13	Si
Maschio 73	V	0.612	SLV 13	No
Maschio 73	PFFP	5.086	SLV 9	Si
Maschio 73	R	0.071	SLV 3	No
Maschio 74	PF SLU	13.092	SLU 84	Si
Maschio 74	V SLU	7.699	SLU 78	Si
Maschio 74	PF	1.78	SLV 9	Si
Maschio 74	V	0.669	SLV 13	No
Maschio 74	PFFP	4.972	SLV 5	Si
Maschio 74	R	0.072	SLV 15	No
Maschio 75	PF SLU	4.895	SLU 84	Si
Maschio 75	V SLU	1.248	SLU 83	Si
Maschio 75	PF	0	SLV 1	No
Maschio 75	V	0	SLV 1	No
Maschio 75	PFFP	2.663	SLV 5	Si
Maschio 75	R	0	SLV 10	No
Maschio 76	PF SLU	2.743	SLU 84	Si
Maschio 76	V SLU	0.593	SLU 83	No
Maschio 76	PF	0	SLV 7	No
Maschio 76	V	0	SLV 7	No
Maschio 76	PFFP	2.897	SLV 15	Si
Maschio 76	R	0.05	SLV 11	No
Maschio 77	PF SLU	7.083	SLU 84	Si
Maschio 77	V SLU	13.351	SLU 43	Si
Maschio 77	PF	3.636	SLV 1	Si
Maschio 77	V	0.71	SLV 13	No
Maschio 77	PFFP	9.212	SLV 11	Si
Maschio 77	R	0.063	SLV 11	No
Maschio 78	PF SLU	5.419	SLU 84	Si
Maschio 78	V SLU	11.3	SLU 73	Si
Maschio 78	PF	3.195	SLV 15	Si
Maschio 78	V	0.629	SLV 15	No
Maschio 78	PFFP	10.077	SLV 1	Si
Maschio 78	R	0.063	SLV 9	No
Maschio 79	PF SLU	2.196	SLU 84	Si
Maschio 79	V SLU	0.567	SLU 83	No
Maschio 79	PF	0	SLV 12	No
Maschio 79	V	0	SLV 3	No
Maschio 79	PFFP	0	SLV 8	No
Maschio 79	R	0	SLV 12	No
Maschio 80	PF SLU	0	SLU 31	No
Maschio 80	V SLU	18.077	SLU 83	Si
Maschio 80	PF	1.791	SLV 1	Si
Maschio 80	V	0.756	SLV 13	No
Maschio 80	PFFP	6.676	SLV 7	Si
Maschio 80	R	0.019	SLV 5	No
Maschio 81	PF SLU	0	SLU 3	No
Maschio 81	V SLU	2.143	SLU 84	Si
Maschio 81	PF	0	SLV 1	No
Maschio 81	V	0	SLV 1	No
Maschio 81	PFFP	1.441	SLV 1	Si
Maschio 81	R	0.018	SLV 15	No
Maschio 82	PF SLU	4.716	SLU 83	Si
Maschio 82	V SLU	1.102	SLU 83	Si
Maschio 82	PF	2.483	SLV 7	Si
Maschio 82	V	0.715	SLV 5	No
Maschio 82	PFFP	19.639	SLV 7	Si
Maschio 82	R	0.274	SLV 9	No
Maschio 83	PF SLU	10.9	SLU 81	Si
Maschio 83	V SLU	3.197	SLU 81	Si
Maschio 83	PF	2.786	SLV 7	Si
Maschio 83	V	0.938	SLV 11	No
Maschio 83	PFFP	22.386	SLV 7	Si
Maschio 83	R	0.352	SLV 13	No
Maschio 84	PF SLU	0	SLU 73	No
Maschio 84	V SLU	1.878	SLU 76	Si
Maschio 84	PF	2.949	SLV 7	Si
Maschio 84	V	0.963	SLV 11	No
Maschio 84	PFFP	23.06	SLV 13	Si
Maschio 84	R	0.148	SLV 3	No
Maschio 86	PF SLU	0	SLU 1	No
Maschio 86	V SLU	0.192	SLU 83	No
Maschio 86	PF	0	SLV 3	No
Maschio 86	V	0.192	SLV 5	No
Maschio 86	PFFP	4.443	SLV 1	Si
Maschio 86	R	0	SLV 1	No
Maschio 87	PF SLU	0	SLU 1	No
Maschio 87	V SLU	0	SLU 1	No
Maschio 87	PF	0	SLV 12	No

Desc.	Stato limite	Coeff.s.	Comb.	Verifica
Maschio 87	V	0	SLV 3	No
Maschio 87	PFFP	0	SLV 12	No
Maschio 87	R	0	SLV 10	No
Maschio 88	PF SLU	0	SLU 31	No
Maschio 88	V SLU	5.794	SLU 83	Si
Maschio 88	PF	1.209	SLV 11	Si
Maschio 88	V	0.557	SLV 11	No
Maschio 88	PFFP	5.584	SLV 5	Si
Maschio 88	R	0.018	SLV 1	No
Maschio 89	PF SLU	2.127	SLU 83	Si
Maschio 89	V SLU	1.404	SLU 83	Si
Maschio 89	PF	0	SLV 8	No
Maschio 89	V	0	SLV 3	No
Maschio 89	PFFP	0	SLV 7	No
Maschio 89	R	0	SLV 8	No
Maschio 90	PF SLU	0.285	SLU 83	No
Maschio 90	V SLU	2.647	SLU 83	Si
Maschio 90	PF	0	SLV 12	No
Maschio 90	V	0	SLV 1	No
Maschio 90	PFFP	4.722	SLV 5	Si
Maschio 90	R	0	SLV 12	No
Maschio 91	PF SLU	0.927	SLU 40	No
Maschio 91	V SLU	0.006	SLU 40	No
Maschio 91	PF	0	SLV 1	No
Maschio 91	V	0	SLV 1	No
Maschio 91	PFFP	1.085	SLV 11	Si
Maschio 91	R	0.05	SLV 7	No
Maschio 92	PF SLU	0.814	SLU 76	No
Maschio 92	V SLU	1.631	SLU 5	Si
Maschio 92	PF	0	SLV 12	No
Maschio 92	V	0	SLV 1	No
Maschio 92	PFFP	0	SLV 12	No
Maschio 92	R	0	SLV 10	No
Maschio 93	PF SLU	0.239	SLU 83	No
Maschio 93	V SLU	0.765	SLU 76	No
Maschio 93	PF	0	SLV 10	No
Maschio 93	V	0	SLV 1	No
Maschio 93	PFFP	0	SLV 10	No
Maschio 93	R	0	SLV 12	No
Maschio 94	PF SLU	0	SLU 10	No
Maschio 94	V SLU	2.989	SLU 76	Si
Maschio 94	PF	0.973	SLV 5	No
Maschio 94	V	0.667	SLV 7	No
Maschio 94	PFFP	5.873	SLV 13	Si
Maschio 94	R	0.017	SLV 3	No
Maschio 95	PF SLU	0.981	SLU 83	No
Maschio 95	V SLU	1.002	SLU 83	Si
Maschio 95	PF	0	SLV 12	No
Maschio 95	V	0	SLV 3	No
Maschio 95	PFFP	0	SLV 8	No
Maschio 95	R	0.073	SLV 1	No
Maschio 96	PF SLU	0	SLU 53	No
Maschio 96	V SLU	2.764	SLU 84	Si
Maschio 96	PF	2.206	SLV 3	Si
Maschio 96	V	0.694	SLV 11	No
Maschio 96	PFFP	5.59	SLV 5	Si
Maschio 96	R	0.02	SLV 11	No
Maschio 97	PF SLU	0	SLU 10	No
Maschio 97	V SLU	0.192	SLU 41	No
Maschio 97	PF	0	SLV 10	No
Maschio 97	V	0	SLV 3	No
Maschio 97	PFFP	0	SLV 10	No
Maschio 97	R	0	SLV 5	No
Maschio 98	PF SLU	0	SLU 1	No
Maschio 98	V SLU	0.448	SLU 83	No
Maschio 98	PF	0	SLV 5	No
Maschio 98	V	0	SLV 5	No
Maschio 98	PFFP	0	SLV 6	No
Maschio 98	R	0.073	SLV 15	No
Maschio 99	PF SLU	0	SLU 74	No
Maschio 99	V SLU	1.205	SLU 81	Si
Maschio 99	PF	0	SLV 3	No
Maschio 99	V	0	SLV 3	No
Maschio 99	PFFP	7.807	SLV 7	Si
Maschio 99	R	0.074	SLV 13	No
Maschio 100	PF SLU	1.809	SLU 81	Si
Maschio 100	V SLU	0.947	SLU 81	No
Maschio 100	PF	0	SLV 12	No
Maschio 100	V	0	SLV 7	No
Maschio 100	PFFP	0	SLV 12	No
Maschio 100	R	0	SLV 12	No
Maschio 101	PF SLU	1.275	SLU 83	Si
Maschio 101	V SLU	0.506	SLU 83	No
Maschio 101	PF	0	SLV 3	No
Maschio 101	V	0	SLV 3	No
Maschio 101	PFFP	1.752	SLV 7	Si
Maschio 101	R	0	SLV 8	No
Maschio 102	PF SLU	2.788	SLU 81	Si
Maschio 102	V SLU	1.419	SLU 81	Si
Maschio 102	PF	0	SLV 6	No
Maschio 102	V	0	SLV 1	No

Desc.	Stato limite	Coeff.s.	Comb.	Verifica
Maschio 102	PFFP	2.294	SLV 5	Si
Maschio 102	R	0	SLV 6	No
Maschio 103	PF SLU	1.758	SLU 77	Si
Maschio 103	V SLU	0.742	SLU 80	No
Maschio 103	PF	0	SLV 6	No
Maschio 103	V	0	SLV 1	No
Maschio 103	PFFP	0	SLV 6	No
Maschio 103	R	0	SLV 6	No
Maschio 104	PF SLU	0	SLU 74	No
Maschio 104	V SLU	18.027	SLU 2	Si
Maschio 104	PF	1.8	SLV 5	Si
Maschio 104	V	1.715	SLV 11	Si
Maschio 104	PFFP	7.143	SLV 1	Si
Maschio 104	R	0.07	SLV 15	No
Maschio 105	PF SLU	10.963	SLU 81	Si
Maschio 105	V SLU	18.983	SLU 2	Si
Maschio 105	PF	3.156	SLV 9	Si
Maschio 105	V	1.707	SLV 9	Si
Maschio 105	PFFP	6.016	SLV 13	Si
Maschio 105	R	0.069	SLV 3	No
Maschio 106	PF SLU	6.391	SLU 84	Si
Maschio 106	V SLU	4.001	SLU 40	Si
Maschio 106	PF	0	SLV 13	No
Maschio 106	V	0	SLV 13	No
Maschio 106	PFFP	3.091	SLV 9	Si
Maschio 106	R	0.061	SLV 15	No
Maschio 107	PF SLU	10.27	SLU 83	Si
Maschio 107	V SLU	14.372	SLU 39	Si
Maschio 107	PF	1.371	SLV 13	Si
Maschio 107	V	0.337	SLV 13	No
Maschio 107	PFFP	3.724	SLV 9	Si
Maschio 107	R	0.071	SLV 1	No
Maschio 108	PF SLU	6.953	SLU 81	Si
Maschio 108	V SLU	1.783	SLU 81	Si
Maschio 108	PF	1.985	SLV 15	Si
Maschio 108	V	0.758	SLV 3	No
Maschio 108	PFFP	4.166	SLV 11	Si
Maschio 108	R	0.049	SLV 13	No
Maschio 109	PF SLU	8.505	SLU 83	Si
Maschio 109	V SLU	3.778	SLU 79	Si
Maschio 109	PF	1.487	SLV 3	Si
Maschio 109	V	0.601	SLV 15	No
Maschio 109	PFFP	3.817	SLV 11	Si
Maschio 109	R	0.063	SLV 15	No
Maschio 110	PF SLU	3.871	SLU 83	Si
Maschio 110	V SLU	5.648	SLU 81	Si
Maschio 110	PF	0	SLV 13	No
Maschio 110	V	0	SLV 13	No
Maschio 110	PFFP	4.228	SLV 11	Si
Maschio 110	R	0	SLV 13	No
Maschio 111	PF SLU	13.706	SLU 83	Si
Maschio 111	V SLU	2.833	SLU 83	Si
Maschio 111	PF	1.763	SLV 5	Si
Maschio 111	V	0.827	SLV 5	No
Maschio 111	PFFP	3.33	SLV 9	Si
Maschio 111	R	0.07	SLV 3	No
Maschio 112	PF SLU	11.982	SLU 82	Si
Maschio 112	V SLU	5.681	SLU 84	Si
Maschio 112	PF	5.916	SLV 11	Si
Maschio 112	V	0.608	SLV 9	No
Maschio 112	PFFP	2.305	SLV 9	Si
Maschio 112	R	0.018	SLV 7	No
Maschio 113	PF SLU	2.685	SLU 77	Si
Maschio 113	V SLU	1.727	SLU 81	Si
Maschio 113	PF	0	SLV 13	No
Maschio 113	V	0	SLV 13	No
Maschio 113	PFFP	2.533	SLV 15	Si
Maschio 113	R	0.014	SLV 7	No
Maschio 114	PF SLU	10.347	SLU 30	Si
Maschio 114	V SLU	2.853	SLU 5	Si
Maschio 114	PF	3.173	SLV 11	Si
Maschio 114	V	0.569	SLV 11	No
Maschio 114	PFFP	2.202	SLV 15	Si
Maschio 114	R	0.019	SLV 1	No
Maschio 115	PF SLU	0	SLU 1	No
Maschio 115	V SLU	0	SLU 1	No
Maschio 115	PF	0	SLV 14	No
Maschio 115	V	0	SLV 1	No
Maschio 115	PFFP	0	SLV 12	No
Maschio 115	R	0	SLV 16	No
Maschio 116	PF SLU	2.506	SLU 82	Si
Maschio 116	V SLU	1.097	SLU 82	Si
Maschio 116	PF	0	SLV 15	No
Maschio 116	V	0	SLV 15	No
Maschio 116	PFFP	5.335	SLV 7	Si
Maschio 116	R	0.018	SLV 11	No
Maschio 117	PF SLU	3.38	SLU 76	Si
Maschio 117	V SLU	2.544	SLU 76	Si
Maschio 117	PF	0	SLV 14	No
Maschio 117	V	0	SLV 5	No
Maschio 117	PFFP	3.851	SLV 13	Si

Desc.	Stato limite	Coeff.s.	Comb.	Verifica
Maschio 117	R	0.058	SLV 11	No
Maschio 118	PF SLU	16.105	SLU 84	Si
Maschio 118	V SLU	12.645	SLU 60	Si
Maschio 118	PF	0	SLV 11	No
Maschio 118	V	0	SLV 11	No
Maschio 118	PFFP	4.198	SLV 7	Si
Maschio 118	R	0.075	SLV 13	No
Maschio 119	PF SLU	0	SLU 1	No
Maschio 119	V SLU	0	SLU 1	No
Maschio 119	PF	0	SLV 16	No
Maschio 119	V	0	SLV 3	No
Maschio 119	PFFP	0	SLV 16	No
Maschio 119	R	0	SLV 10	No
Maschio 120	PF SLU	2.873	SLU 83	Si
Maschio 120	V SLU	44.02	SLU 51	Si
Maschio 120	PF	2.452	SLV 11	Si
Maschio 120	V	0.66	SLV 9	No
Maschio 120	PFFP	3.18	SLV 5	Si
Maschio 120	R	0.02	SLV 11	No
Maschio 121	PF SLU	10.257	SLU 81	Si
Maschio 121	V SLU	3.571	SLU 81	Si
Maschio 121	PF	3.758	SLV 7	Si
Maschio 121	V	1.064	SLV 7	Si
Maschio 121	PFFP	20.058	SLV 11	Si
Maschio 121	R	0.125	SLV 11	No
Maschio 122	PF SLU	13.236	SLU 81	Si
Maschio 122	V SLU	3.718	SLU 81	Si
Maschio 122	PF	3.571	SLV 7	Si
Maschio 122	V	1.086	SLV 13	Si
Maschio 122	PFFP	15.458	SLV 11	Si
Maschio 122	R	0.284	SLV 1	No
Maschio 124	PF SLU	5.883	SLU 84	Si
Maschio 124	V SLU	4.876	SLU 31	Si
Maschio 124	PF	4.949	SLV 11	Si
Maschio 124	V	0.911	SLV 11	No
Maschio 124	PFFP	10.642	SLV 11	Si
Maschio 124	R	0.127	SLV 7	No
Maschio 125	PF SLU	0.886	SLU 83	No
Maschio 125	V SLU	0.605	SLU 77	No
Maschio 125	PF	0	SLV 6	No
Maschio 125	V	0	SLV 5	No
Maschio 125	PFFP	4.971	SLV 11	Si
Maschio 125	R	0	SLV 6	No
Maschio 126	PF SLU	7.039	SLU 84	Si
Maschio 126	V SLU	3.026	SLU 83	Si
Maschio 126	PF	1.032	SLV 13	Si
Maschio 126	V	0.204	SLV 13	No
Maschio 126	PFFP	4.881	SLV 9	Si
Maschio 126	R	0.055	SLV 9	No
Maschio 127	PF SLU	31.55	SLU 81	Si
Maschio 127	V SLU	32.842	SLU 48	Si
Maschio 127	PF	1.785	SLV 13	Si
Maschio 127	V	0.57	SLV 13	No
Maschio 127	PFFP	4.987	SLV 9	Si
Maschio 127	R	0.066	SLV 5	No
Maschio 128	PF SLU	40.679	SLU 49	Si
Maschio 128	V SLU	11.116	SLU 51	Si
Maschio 128	PF	2.002	SLV 1	Si
Maschio 128	V	0.671	SLV 1	No
Maschio 128	PFFP	5.091	SLV 5	Si
Maschio 128	R	0.071	SLV 15	No
Maschio 129	PF SLU	8.681	SLU 75	Si
Maschio 129	V SLU	3.428	SLU 83	Si
Maschio 129	PF	1.023	SLV 1	Si
Maschio 129	V	0.244	SLV 1	No
Maschio 129	PFFP	5.119	SLV 5	Si
Maschio 129	R	0.063	SLV 5	No
Maschio 130	PF SLU	2.538	SLU 83	Si
Maschio 130	V SLU	0.544	SLU 83	No
Maschio 130	PF	2.095	SLV 1	Si
Maschio 130	V	0.538	SLV 1	No
Maschio 130	PFFP	4.391	SLV 15	Si
Maschio 130	R	0.049	SLV 11	No
Maschio 131	PF SLU	5.3	SLU 84	Si
Maschio 131	V SLU	7.902	SLU 81	Si
Maschio 131	PF	2.632	SLV 13	Si
Maschio 131	V	0.683	SLV 15	No
Maschio 131	PFFP	6.941	SLV 15	Si
Maschio 131	R	0.059	SLV 11	No
Maschio 132	PF SLU	4.696	SLU 84	Si
Maschio 132	V SLU	15.219	SLU 29	Si
Maschio 132	PF	2.659	SLV 1	Si
Maschio 132	V	0.706	SLV 1	No
Maschio 132	PFFP	7.592	SLV 5	Si
Maschio 132	R	0.045	SLV 7	No
Maschio 133	PF SLU	2.577	SLU 83	Si
Maschio 133	V SLU	0.729	SLU 83	No
Maschio 133	PF	1.735	SLV 3	Si
Maschio 133	V	0.597	SLV 15	No
Maschio 133	PFFP	3.623	SLV 3	Si
Maschio 133	R	0.053	SLV 5	No

Desc.	Stato limite	Coeff.s.	Comb.	Verifica
Maschio 134	PF SLU	4.078	SLU 83	Si
Maschio 134	V SLU	58.216	SLU 50	Si
Maschio 134	PF	3.721	SLV 1	Si
Maschio 134	V	0.824	SLV 1	No
Maschio 134	PFFP	4.91	SLV 13	Si
Maschio 134	R	0.005	SLV 5	No
Maschio 135	PF SLU	0	SLU 53	No
Maschio 135	V SLU	3.052	SLU 50	Si
Maschio 135	PF	0	SLV 4	No
Maschio 135	V	0	SLV 1	No
Maschio 135	PFFP	0	SLV 4	No
Maschio 135	R	0.005	SLV 13	No
Maschio 136	PF SLU	9.777	SLU 81	Si
Maschio 136	V SLU	7.53	SLU 39	Si
Maschio 136	PF	3.022	SLV 11	Si
Maschio 136	V	0.932	SLV 11	No
Maschio 136	PFFP	19.376	SLV 7	Si
Maschio 136	R	0.091	SLV 7	No
Maschio 137	PF SLU	19.304	SLU 39	Si
Maschio 137	V SLU	8.565	SLU 39	Si
Maschio 137	PF	3.023	SLV 11	Si
Maschio 137	V	0.981	SLV 11	No
Maschio 137	PFFP	14.73	SLV 7	Si
Maschio 137	R	0.285	SLV 13	No
Maschio 138	PF SLU	5.601	SLU 77	Si
Maschio 138	V SLU	4.811	SLU 73	Si
Maschio 138	PF	4.316	SLV 7	Si
Maschio 138	V	0.933	SLV 7	No
Maschio 138	PFFP	17.35	SLV 15	Si
Maschio 138	R	0.146	SLV 9	No
Maschio 140	PF SLU	0	SLU 77	No
Maschio 140	V SLU	0.638	SLU 77	No
Maschio 140	PF	0	SLV 10	No
Maschio 140	V	0	SLV 5	No
Maschio 140	PFFP	7.363	SLV 11	Si
Maschio 140	R	0	SLV 10	No
Maschio 141	PF SLU	0	SLU 1	No
Maschio 141	V SLU	0	SLU 1	No
Maschio 141	PF	0	SLV 12	No
Maschio 141	V	0	SLV 1	No
Maschio 141	PFFP	0	SLV 12	No
Maschio 141	R	0	SLV 10	No
Maschio 142	PF SLU	2.41	SLU 83	Si
Maschio 142	V SLU	34.09	SLU 80	Si
Maschio 142	PF	2.782	SLV 7	Si
Maschio 142	V	0.696	SLV 5	No
Maschio 142	PFFP	3.707	SLV 5	Si
Maschio 142	R	0.02	SLV 11	No
Maschio 143	PF SLU	11.916	SLU 83	Si
Maschio 143	V SLU	11.41	SLU 39	Si
Maschio 143	PF	0	SLV 7	No
Maschio 143	V	0	SLV 7	No
Maschio 143	PFFP	3.416	SLV 11	Si
Maschio 143	R	0.072	SLV 15	No
Maschio 144	PF SLU	6.412	SLU 47	Si
Maschio 144	V SLU	3.419	SLU 76	Si
Maschio 144	PF	0	SLV 10	No
Maschio 144	V	0	SLV 1	No
Maschio 144	PFFP	0	SLV 10	No
Maschio 144	R	0	SLV 10	No
Maschio 145	PF SLU	2.49	SLU 82	Si
Maschio 145	V SLU	1.022	SLU 82	Si
Maschio 145	PF	0	SLV 3	No
Maschio 145	V	0	SLV 3	No
Maschio 145	PFFP	4.983	SLV 11	Si
Maschio 145	R	0.008	SLV 7	No
Maschio 146	PF SLU	1.725	SLU 76	Si
Maschio 146	V SLU	2.279	SLU 81	Si
Maschio 146	PF	0	SLV 10	No
Maschio 146	V	0	SLV 1	No
Maschio 146	PFFP	6.668	SLV 11	Si
Maschio 146	R	0	SLV 10	No
Maschio 147	PF SLU	1.319	SLU 5	Si
Maschio 147	V SLU	2.223	SLU 5	Si
Maschio 147	PF	0	SLV 16	No
Maschio 147	V	0	SLV 1	No
Maschio 147	PFFP	0	SLV 5	No
Maschio 147	R	0	SLV 16	No
Maschio 148	PF SLU	0.822	SLU 84	No
Maschio 148	V SLU	3.138	SLU 76	Si
Maschio 148	PF	4.373	SLV 9	Si
Maschio 148	V	0.723	SLV 7	No
Maschio 148	PFFP	3.556	SLV 3	Si
Maschio 148	R	0.019	SLV 13	No
Maschio 149	PF SLU	3.292	SLU 81	Si
Maschio 149	V SLU	4.176	SLU 73	Si
Maschio 149	PF	0	SLV 12	No
Maschio 149	V	0	SLV 1	No
Maschio 149	PFFP	0	SLV 3	No
Maschio 149	R	0	SLV 7	No
Maschio 150	PF SLU	7.579	SLU 82	Si

Desc.	Stato limite	Coeff.s.	Comb.	Verifica
Maschio 150	V SLU	3.269	SLU 84	Si
Maschio 150	PF	7.488	SLV 7	Si
Maschio 150	V	0.672	SLV 5	No
Maschio 150	PFFP	3.123	SLV 1	Si
Maschio 150	R	0.019	SLV 15	No
Maschio 151	PF SLU	0.342	SLU 83	No
Maschio 151	V SLU	0.631	SLU 83	No
Maschio 151	PF	0	SLV 10	No
Maschio 151	V	0	SLV 1	No
Maschio 151	PFFP	0	SLV 10	No
Maschio 151	R	0	SLV 1	No
Maschio 152	PF SLU	0	SLU 74	No
Maschio 152	V SLU	1.106	SLU 83	Si
Maschio 152	PF	0	SLV 1	No
Maschio 152	V	0	SLV 1	No
Maschio 152	PFFP	0	SLV 4	No
Maschio 152	R	0	SLV 1	No
Maschio 153	PF SLU	4.93	SLU 81	Si
Maschio 153	V SLU	5.831	SLU 81	Si
Maschio 153	PF	0	SLV 1	No
Maschio 153	V	0	SLV 1	No
Maschio 153	PFFP	3.965	SLV 7	Si
Maschio 153	R	0	SLV 1	No
Maschio 154	PF SLU	6.616	SLU 81	Si
Maschio 154	V SLU	4.381	SLU 81	Si
Maschio 154	PF	1.306	SLV 15	Si
Maschio 154	V	0.484	SLV 15	No
Maschio 154	PFFP	3.168	SLV 7	Si
Maschio 154	R	0.072	SLV 1	No
Maschio 155	PF SLU	4.155	SLU 83	Si
Maschio 155	V SLU	1.242	SLU 83	Si
Maschio 155	PF	1.301	SLV 11	Si
Maschio 155	V	0.406	SLV 11	No
Maschio 155	PFFP	3.303	SLV 7	Si
Maschio 155	R	0.068	SLV 15	No
Maschio 156	PF SLU	12.068	SLU 71	Si
Maschio 156	V SLU	10.693	SLU 81	Si
Maschio 156	PF	1.204	SLV 1	Si
Maschio 156	V	0.262	SLV 1	No
Maschio 156	PFFP	4.102	SLV 5	Si
Maschio 156	R	0.065	SLV 15	No
Maschio 157	PF SLU	4.77	SLU 78	Si
Maschio 157	V SLU	1.771	SLU 80	Si
Maschio 157	PF	0	SLV 1	No
Maschio 157	V	0	SLV 1	No
Maschio 157	PFFP	2.077	SLV 5	Si
Maschio 157	R	0.067	SLV 15	No
Maschio 158	PF SLU	3.724	SLU 84	Si
Maschio 158	V SLU	5.468	SLU 50	Si
Maschio 158	PF	2.713	SLV 7	Si
Maschio 158	V	1.316	SLV 11	Si
Maschio 158	PFFP	5.259	SLV 3	Si
Maschio 158	R	0.07	SLV 13	No
Maschio 159	PF SLU	3.354	SLU 84	Si
Maschio 159	V SLU	5.968	SLU 47	Si
Maschio 159	PF	1.852	SLV 5	Si
Maschio 159	V	1.196	SLV 5	Si
Maschio 159	PFFP	4.245	SLV 1	Si
Maschio 159	R	0.071	SLV 15	No
Maschio 160	PF SLU	50.312	SLU 82	Si
Maschio 160	V SLU	24.633	SLU 2	Si
Maschio 160	PF	4.52	SLV 9	Si
Maschio 160	V	1.722	SLV 9	Si
Maschio 160	PFFP	4.029	SLV 13	Si
Maschio 160	R	0.059	SLV 1	No
Maschio 161	PF SLU	6.986	SLU 84	Si
Maschio 161	V SLU	4.065	SLU 40	Si
Maschio 161	PF	0	SLV 13	No
Maschio 161	V	0	SLV 13	No
Maschio 161	PFFP	2.201	SLV 9	Si
Maschio 161	R	0	SLV 5	No
Maschio 162	PF SLU	13.964	SLU 81	Si
Maschio 162	V SLU	19.412	SLU 39	Si
Maschio 162	PF	1.619	SLV 13	Si
Maschio 162	V	0.524	SLV 13	No
Maschio 162	PFFP	1.93	SLV 9	Si
Maschio 162	R	0.042	SLV 9	No
Maschio 163	PF SLU	7.978	SLU 81	Si
Maschio 163	V SLU	3.423	SLU 81	Si
Maschio 163	PF	2.725	SLV 13	Si
Maschio 163	V	1.194	SLV 3	Si
Maschio 163	PFFP	2.876	SLV 11	Si
Maschio 163	R	0.032	SLV 11	No
Maschio 164	PF SLU	17.803	SLU 81	Si
Maschio 164	V SLU	7.007	SLU 79	Si
Maschio 164	PF	1.419	SLV 3	Si
Maschio 164	V	0.67	SLV 3	No
Maschio 164	PFFP	2.498	SLV 11	Si
Maschio 164	R	0.074	SLV 13	No
Maschio 165	PF SLU	3.469	SLU 68	Si
Maschio 165	V SLU	6.123	SLU 77	Si

Desc.	Stato limite	Coeff.s.	Comb.	Verifica
Maschio 165	PF	0	SLV 16	No
Maschio 165	V	0	SLV 9	No
Maschio 165	PFFP	1.195	SLV 15	Si
Maschio 165	R	0	SLV 14	No
Maschio 166	PF SLU	21.727	SLU 40	Si
Maschio 166	V SLU	5.698	SLU 41	Si
Maschio 166	PF	0.97	SLV 9	No
Maschio 166	V	0.049	SLV 9	No
Maschio 166	PFFP	2.533	SLV 9	Si
Maschio 166	R	0.071	SLV 3	No
Maschio 167	PF SLU	21.8	SLU 49	Si
Maschio 167	V SLU	8.272	SLU 84	Si
Maschio 167	PF	4.649	SLV 9	Si
Maschio 167	V	0.662	SLV 9	No
Maschio 167	PFFP	1.393	SLV 13	Si
Maschio 167	R	0.015	SLV 9	No
Maschio 168	PF SLU	2.708	SLU 31	Si
Maschio 168	V SLU	1.434	SLU 82	Si
Maschio 168	PF	0	SLV 8	No
Maschio 168	V	0	SLV 3	No
Maschio 168	PFFP	0	SLV 15	No
Maschio 168	R	0	SLV 8	No
Maschio 169	PF SLU	5.993	SLU 9	Si
Maschio 169	V SLU	4.193	SLU 5	Si
Maschio 169	PF	3.602	SLV 13	Si
Maschio 169	V	0.738	SLV 11	No
Maschio 169	PFFP	1.172	SLV 15	Si
Maschio 169	R	0.018	SLV 3	No
Maschio 170	PF SLU	0	SLU 2	No
Maschio 170	V SLU	0	SLU 2	No
Maschio 170	PF	0	SLV 16	No
Maschio 170	V	0	SLV 1	No
Maschio 170	PFFP	0	SLV 12	No
Maschio 170	R	0	SLV 16	No
Maschio 171	PF SLU	2.663	SLU 40	Si
Maschio 171	V SLU	1.134	SLU 81	Si
Maschio 171	PF	0	SLV 13	No
Maschio 171	V	0	SLV 13	No
Maschio 171	PFFP	2.664	SLV 7	Si
Maschio 171	R	0.026	SLV 11	No
Maschio 172	PF SLU	1.07	SLU 47	Si
Maschio 172	V SLU	1.017	SLU 47	Si
Maschio 172	PF	0	SLV 10	No
Maschio 172	V	0	SLV 1	No
Maschio 172	PFFP	0	SLV 14	No
Maschio 172	R	0	SLV 14	No
Maschio 173	PF SLU	7.607	SLU 42	Si
Maschio 173	V SLU	6.126	SLU 42	Si
Maschio 173	PF	2.385	SLV 11	Si
Maschio 173	V	1.299	SLV 15	Si
Maschio 173	PFFP	2.227	SLV 3	Si
Maschio 173	R	0.035	SLV 7	No
Maschio 174	PF SLU	0	SLU 1	No
Maschio 174	V SLU	0	SLU 1	No
Maschio 174	PF	0	SLV 16	No
Maschio 174	V	0	SLV 1	No
Maschio 174	PFFP	0	SLV 16	No
Maschio 174	R	0	SLV 10	No
Maschio 175	PF SLU	4.326	SLU 83	Si
Maschio 175	V SLU	138.075	SLU 50	Si
Maschio 175	PF	2.244	SLV 11	Si
Maschio 175	V	0.82	SLV 9	No
Maschio 175	PFFP	1.558	SLV 5	Si
Maschio 175	R	0.02	SLV 15	No
Maschio 176	PF SLU	9.978	SLU 39	Si
Maschio 176	V SLU	3.681	SLU 81	Si
Maschio 176	PF	4.154	SLV 7	Si
Maschio 176	V	1.122	SLV 13	Si
Maschio 176	PFFP	16.693	SLV 11	Si
Maschio 176	R	0.065	SLV 11	No
Maschio 177	PF SLU	5.397	SLU 83	Si
Maschio 177	V SLU	6.262	SLU 81	Si
Maschio 177	PF	3.761	SLV 13	Si
Maschio 177	V	1.376	SLV 13	Si
Maschio 177	PFFP	9.735	SLV 11	Si
Maschio 177	R	0.263	SLV 1	No
Maschio 179	PF SLU	12.238	SLU 39	Si
Maschio 179	V SLU	5.839	SLU 31	Si
Maschio 179	PF	9.5	SLV 11	Si
Maschio 179	V	0.98	SLV 11	No
Maschio 179	PFFP	4.171	SLV 11	Si
Maschio 179	R	0.127	SLV 7	No
Maschio 180	PF SLU	1.717	SLU 77	Si
Maschio 180	V SLU	0.645	SLU 77	No
Maschio 180	PF	0	SLV 12	No
Maschio 180	V	0	SLV 1	No
Maschio 180	PFFP	0	SLV 12	No
Maschio 180	R	0	SLV 10	No
Maschio 181	PF SLU	8.366	SLU 84	Si
Maschio 181	V SLU	4.606	SLU 84	Si
Maschio 181	PF	1.005	SLV 15	Si

Desc.	Stato limite	Coeff.s.	Comb.	Verifica
Maschio 181	V	0.096	SLV 15	No
Maschio 181	PFFP	3.65	SLV 13	Si
Maschio 181	R	0	SLV 7	No
Maschio 182	PF SLU	30.96	SLU 39	Si
Maschio 182	V SLU	14.794	SLU 40	Si
Maschio 182	PF	1.662	SLV 13	Si
Maschio 182	V	0.721	SLV 13	No
Maschio 182	PFFP	3.41	SLV 9	Si
Maschio 182	R	0.037	SLV 9	No
Maschio 183	PF SLU	67.625	SLU 40	Si
Maschio 183	V SLU	35.527	SLU 39	Si
Maschio 183	PF	1.793	SLV 1	Si
Maschio 183	V	0.862	SLV 1	No
Maschio 183	PFFP	3.47	SLV 5	Si
Maschio 183	R	0.067	SLV 5	No
Maschio 184	PF SLU	8.216	SLU 38	Si
Maschio 184	V SLU	4.387	SLU 41	Si
Maschio 184	PF	0	SLV 3	No
Maschio 184	V	0	SLV 3	No
Maschio 184	PFFP	2.964	SLV 7	Si
Maschio 184	R	0	SLV 7	No
Maschio 185	PF SLU	4.268	SLU 39	Si
Maschio 185	V SLU	0.621	SLU 83	No
Maschio 185	PF	3.407	SLV 1	Si
Maschio 185	V	0.666	SLV 1	No
Maschio 185	PFFP	3.281	SLV 15	Si
Maschio 185	R	0.02	SLV 11	No
Maschio 186	PF SLU	9.316	SLU 39	Si
Maschio 186	V SLU	18.206	SLU 15	Si
Maschio 186	PF	3.094	SLV 15	Si
Maschio 186	V	0.77	SLV 15	No
Maschio 186	PFFP	4.371	SLV 13	Si
Maschio 186	R	0.017	SLV 11	No
Maschio 187	PF SLU	28.647	SLU 39	Si
Maschio 187	V SLU	8.185	SLU 52	Si
Maschio 187	PF	4.135	SLV 1	Si
Maschio 187	V	0.823	SLV 15	No
Maschio 187	PFFP	5	SLV 1	Si
Maschio 187	R	0.036	SLV 7	No
Maschio 188	PF SLU	4.649	SLU 77	Si
Maschio 188	V SLU	0.827	SLU 83	No
Maschio 188	PF	2.862	SLV 13	Si
Maschio 188	V	0.757	SLV 13	No
Maschio 188	PFFP	2.515	SLV 1	Si
Maschio 188	R	0.015	SLV 7	No
Maschio 189	PF SLU	8.31	SLU 48	Si
Maschio 189	V SLU	64.855	SLU 50	Si
Maschio 189	PF	2.833	SLV 1	Si
Maschio 189	V	0.953	SLV 1	No
Maschio 189	PFFP	2.433	SLV 13	Si
Maschio 189	R	0	SLV 5	No
Maschio 190	PF SLU	1.987	SLU 50	Si
Maschio 190	V SLU	3.029	SLU 50	Si
Maschio 190	PF	0	SLV 16	No
Maschio 190	V	0	SLV 1	No
Maschio 190	PFFP	0	SLV 4	No
Maschio 190	R	0	SLV 16	No
Maschio 191	PF SLU	10.226	SLU 39	Si
Maschio 191	V SLU	7.806	SLU 9	Si
Maschio 191	PF	3.142	SLV 11	Si
Maschio 191	V	1.063	SLV 11	Si
Maschio 191	PFFP	15.605	SLV 7	Si
Maschio 191	R	0.015	SLV 7	No
Maschio 192	PF SLU	13.2	SLU 39	Si
Maschio 192	V SLU	3.881	SLU 72	Si
Maschio 192	PF	3.503	SLV 1	Si
Maschio 192	V	1.235	SLV 11	Si
Maschio 192	PFFP	9.424	SLV 7	Si
Maschio 192	R	0.268	SLV 13	No
Maschio 193	PF SLU	14.899	SLU 69	Si
Maschio 193	V SLU	5.161	SLU 73	Si
Maschio 193	PF	5.984	SLV 7	Si
Maschio 193	V	1.008	SLV 7	Si
Maschio 193	PFFP	9.293	SLV 7	Si
Maschio 193	R	0.125	SLV 5	No
Maschio 195	PF SLU	1.16	SLU 77	Si
Maschio 195	V SLU	0.511	SLU 77	No
Maschio 195	PF	0	SLV 12	No
Maschio 195	V	0	SLV 5	No
Maschio 195	PFFP	0	SLV 7	No
Maschio 195	R	0	SLV 10	No
Maschio 196	PF SLU	0	SLU 1	No
Maschio 196	V SLU	0	SLU 1	No
Maschio 196	PF	0	SLV 12	No
Maschio 196	V	0	SLV 1	No
Maschio 196	PFFP	0	SLV 12	No
Maschio 196	R	0	SLV 10	No
Maschio 197	PF SLU	3.936	SLU 83	Si
Maschio 197	V SLU	38.425	SLU 51	Si
Maschio 197	PF	2.33	SLV 7	Si
Maschio 197	V	0.824	SLV 5	No

Desc.	Stato limite	Coeff.s.	Comb.	Verifica
Maschio 197	PFFP	1.885	SLV 9	Si
Maschio 197	R	0.018	SLV 7	No
Maschio 198	PF SLU	6.003	SLU 40	Si
Maschio 198	V SLU	5.042	SLU 84	Si
Maschio 198	PF	1.592	SLV 7	Si
Maschio 198	V	1.173	SLV 7	Si
Maschio 198	PFFP	1.887	SLV 15	Si
Maschio 198	R	0.074	SLV 3	No
Maschio 199	PF SLU	2.309	SLU 2	Si
Maschio 199	V SLU	1.263	SLU 76	Si
Maschio 199	PF	0	SLV 14	No
Maschio 199	V	0	SLV 1	No
Maschio 199	PFFP	0	SLV 10	No
Maschio 199	R	0	SLV 14	No
Maschio 200	PF SLU	3.141	SLU 40	Si
Maschio 200	V SLU	1.361	SLU 82	Si
Maschio 200	PF	0	SLV 3	No
Maschio 200	V	0	SLV 3	No
Maschio 200	PFFP	2.556	SLV 11	Si
Maschio 200	R	0.006	SLV 7	No
Maschio 201	PF SLU	1.08	SLU 10	Si
Maschio 201	V SLU	0.97	SLU 31	No
Maschio 201	PF	0	SLV 16	No
Maschio 201	V	0	SLV 1	No
Maschio 201	PFFP	3.196	SLV 11	Si
Maschio 201	R	0	SLV 10	No
Maschio 202	PF SLU	0	SLU 1	No
Maschio 202	V SLU	0	SLU 1	No
Maschio 202	PF	0	SLV 12	No
Maschio 202	V	0	SLV 1	No
Maschio 202	PFFP	0	SLV 6	No
Maschio 202	R	0	SLV 16	No
Maschio 203	PF SLU	4.321	SLU 30	Si
Maschio 203	V SLU	4.384	SLU 5	Si
Maschio 203	PF	3.386	SLV 5	Si
Maschio 203	V	0.795	SLV 7	No
Maschio 203	PFFP	1.639	SLV 3	Si
Maschio 203	R	0.018	SLV 15	No
Maschio 204	PF SLU	3.576	SLU 23	Si
Maschio 204	V SLU	2.323	SLU 82	Si
Maschio 204	PF	0	SLV 12	No
Maschio 204	V	0	SLV 1	No
Maschio 204	PFFP	0	SLV 3	No
Maschio 204	R	0	SLV 12	No
Maschio 205	PF SLU	8.742	SLU 70	Si
Maschio 205	V SLU	5.878	SLU 84	Si
Maschio 205	PF	5.194	SLV 5	Si
Maschio 205	V	0.704	SLV 5	No
Maschio 205	PFFP	1.69	SLV 1	Si
Maschio 205	R	0.017	SLV 11	No
Maschio 206	PF SLU	0.886	SLU 83	No
Maschio 206	V SLU	1.023	SLU 41	Si
Maschio 206	PF	0	SLV 14	No
Maschio 206	V	0	SLV 1	No
Maschio 206	PFFP	0	SLV 10	No
Maschio 206	R	0	SLV 6	No
Maschio 207	PF SLU	0.912	SLU 77	No
Maschio 207	V SLU	2.777	SLU 42	Si
Maschio 207	PF	0	SLV 1	No
Maschio 207	V	0	SLV 1	No
Maschio 207	PFFP	0	SLV 1	No
Maschio 207	R	0	SLV 12	No
Maschio 208	PF SLU	4.513	SLU 44	Si
Maschio 208	V SLU	8.035	SLU 81	Si
Maschio 208	PF	0	SLV 1	No
Maschio 208	V	0	SLV 1	No
Maschio 208	PFFP	1.5	SLV 3	Si
Maschio 208	R	0.072	SLV 15	No
Maschio 209	PF SLU	14.694	SLU 81	Si
Maschio 209	V SLU	8.009	SLU 81	Si
Maschio 209	PF	1.407	SLV 15	Si
Maschio 209	V	0.663	SLV 15	No
Maschio 209	PFFP	2.351	SLV 7	Si
Maschio 209	R	0.072	SLV 9	No
Maschio 210	PF SLU	7.385	SLU 82	Si
Maschio 210	V SLU	2.209	SLU 81	Si
Maschio 210	PF	2.138	SLV 15	Si
Maschio 210	V	0.937	SLV 15	No
Maschio 210	PFFP	2.541	SLV 7	Si
Maschio 210	R	0.046	SLV 7	No
Maschio 211	PF SLU	8.072	SLU 72	Si
Maschio 211	V SLU	6.803	SLU 51	Si
Maschio 211	PF	1.291	SLV 1	Si
Maschio 211	V	0.376	SLV 1	No
Maschio 211	PFFP	2.17	SLV 5	Si
Maschio 211	R	0	SLV 5	No
Maschio 212	PF SLU	6.292	SLU 78	Si
Maschio 212	V SLU	2.183	SLU 80	Si
Maschio 212	PF	0.968	SLV 1	No
Maschio 212	V	0.031	SLV 1	No
Maschio 212	PFFP	2.097	SLV 5	Si

Desc.	Stato limite	Coeff.s.	Comb.	Verifica
Maschio 212	R	0.035	SLV 5	No
Maschio 213	PF SLU	38.604	SLU 31	Si
Maschio 213	V SLU	23.674	SLU 2	Si
Maschio 213	PF	3.393	SLV 5	Si
Maschio 213	V	1.708	SLV 5	Si
Maschio 213	PFFP	2.961	SLV 1	Si
Maschio 213	R	0.066	SLV 13	No
Maschio 214	PF SLU	36.402	SLU 31	Si
Maschio 214	V SLU	45.268	SLU 10	Si
Maschio 214	PF	6.16	SLV 5	Si
Maschio 214	V	2.041	SLV 9	Si
Maschio 214	PFFP	2.409	SLV 13	Si
Maschio 214	R	0	SLV 1	No
Maschio 215	PF SLU	3.772	SLU 78	Si
Maschio 215	V SLU	3.854	SLU 78	Si
Maschio 215	PF	0	SLV 5	No
Maschio 215	V	0	SLV 5	No
Maschio 215	PFFP	1.285	SLV 9	Si
Maschio 215	R	0.11	SLV 1	No
Maschio 216	PF SLU	4.459	SLU 48	Si
Maschio 216	V SLU	21.597	SLU 35	Si
Maschio 216	PF	0	SLV 10	No
Maschio 216	V	0	SLV 5	No
Maschio 216	PFFP	0	SLV 10	No
Maschio 216	R	0.085	SLV 3	No
Maschio 217	PF SLU	3.66	SLU 31	Si
Maschio 217	V SLU	5.241	SLU 81	Si
Maschio 217	PF	1.59	SLV 7	Si
Maschio 217	V	1.629	SLV 7	Si
Maschio 217	PFFP	1.09	SLV 11	Si
Maschio 217	R	0.107	SLV 5	No
Maschio 218	PF SLU	7.444	SLU 42	Si
Maschio 218	V SLU	6.322	SLU 70	Si
Maschio 218	PF	2.216	SLV 3	Si
Maschio 218	V	2.312	SLV 13	Si
Maschio 218	PFFP	0	SLV 9	No
Maschio 218	R	0.104	SLV 7	No
Maschio 219	PF SLU	0	SLU 2	No
Maschio 219	V SLU	0	SLU 2	No
Maschio 219	PF	0	SLV 16	No
Maschio 219	V	0	SLV 3	No
Maschio 219	PFFP	0	SLV 12	No
Maschio 219	R	0	SLV 16	No
Maschio 220	PF SLU	0	SLU 84	No
Maschio 220	V SLU	0	SLU 1	No
Maschio 220	PF	0	SLV 14	No
Maschio 220	V	0	SLV 1	No
Maschio 220	PFFP	0	SLV 9	No
Maschio 220	R	0	SLV 14	No
Maschio 221	PF SLU	1.078	SLU 79	Si
Maschio 221	V SLU	2.124	SLU 72	Si
Maschio 221	PF	0	SLV 1	No
Maschio 221	V	0	SLV 1	No
Maschio 221	PFFP	0	SLV 1	No
Maschio 221	R	0.026	SLV 15	No
Maschio 222	PF SLU	0	SLU 2	No
Maschio 222	V SLU	0	SLU 2	No
Maschio 222	PF	0	SLV 16	No
Maschio 222	V	0	SLV 3	No
Maschio 222	PFFP	0	SLV 16	No
Maschio 222	R	0	SLV 12	No
Maschio 223	PF SLU	1.712	SLU 8	Si
Maschio 223	V SLU	12.431	SLU 26	Si
Maschio 223	PF	0	SLV 16	No
Maschio 223	V	0	SLV 5	No
Maschio 223	PFFP	0	SLV 1	No
Maschio 223	R	0	SLV 16	No
Maschio 224	PF SLU	0	SLU 31	No
Maschio 224	V SLU	0	SLU 31	No
Maschio 224	PF	0	SLV 3	No
Maschio 224	V	0	SLV 3	No
Maschio 224	PFFP	0	SLV 3	No
Maschio 224	R	0.092	SLV 11	No
Maschio 225	PF SLU	0	SLU 84	No
Maschio 225	V SLU	0	SLU 1	No
Maschio 225	PF	0	SLV 16	No
Maschio 225	V	0	SLV 1	No
Maschio 225	PFFP	0	SLV 16	No
Maschio 225	R	0	SLV 10	No
Maschio 226	PF SLU	2.776	SLU 39	Si
Maschio 226	V SLU	28.313	SLU 50	Si
Maschio 226	PF	1.115	SLV 7	Si
Maschio 226	V	0.487	SLV 5	No
Maschio 226	PFFP	0	SLV 1	No
Maschio 226	R	0	SLV 16	No
Maschio 227	PF SLU	3.127	SLU 29	Si
Maschio 227	V SLU	14.391	SLU 50	Si
Maschio 227	PF	0	SLV 7	No
Maschio 227	V	0	SLV 7	No
Maschio 227	PFFP	0	SLV 11	No
Maschio 227	R	0.079	SLV 15	No

Desc.	Stato limite	Coeff.s.	Comb.	Verifica
Maschio 228	PF SLU	1.946	SLU 8	Si
Maschio 228	V SLU	3.443	SLU 79	Si
Maschio 228	PF	0	SLV 3	No
Maschio 228	V	0	SLV 3	No
Maschio 228	PFFP	0	SLV 7	No
Maschio 228	R	0.121	SLV 15	No
Maschio 229	PF SLU	10.382	SLU 28	Si
Maschio 229	V SLU	8.26	SLU 78	Si
Maschio 229	PF	1.618	SLV 13	Si
Maschio 229	V	1.075	SLV 13	Si
Maschio 229	PFFP	1.609	SLV 9	Si
Maschio 229	R	0.11	SLV 3	No
Maschio 230	PF SLU	11.143	SLU 49	Si
Maschio 230	V SLU	10.03	SLU 78	Si
Maschio 230	PF	1.83	SLV 1	Si
Maschio 230	V	1.287	SLV 1	Si
Maschio 230	PFFP	1.543	SLV 5	Si
Maschio 230	R	0.11	SLV 15	No
Maschio 231	PF SLU	1.075	SLU 38	Si
Maschio 231	V SLU	0.742	SLU 38	No
Maschio 231	PF	0	SLV 9	No
Maschio 231	V	0	SLV 9	No
Maschio 231	PFFP	0	SLV 7	No
Maschio 231	R	0.108	SLV 3	No
Maschio 232	PF SLU	3.808	SLU 39	Si
Maschio 232	V SLU	0.676	SLU 83	No
Maschio 232	PF	3.384	SLV 1	Si
Maschio 232	V	0.916	SLV 1	No
Maschio 232	PFFP	2.317	SLV 15	Si
Maschio 232	R	0.065	SLV 11	No
Maschio 233	PF SLU	7.303	SLU 39	Si
Maschio 233	V SLU	9.727	SLU 73	Si
Maschio 233	PF	1.141	SLV 15	Si
Maschio 233	V	0.457	SLV 15	No
Maschio 233	PFFP	2.097	SLV 15	Si
Maschio 233	R	0.031	SLV 9	No
Maschio 234	PF SLU	10.628	SLU 30	Si
Maschio 234	V SLU	3.857	SLU 82	Si
Maschio 234	PF	1.652	SLV 3	Si
Maschio 234	V	1.159	SLV 15	Si
Maschio 234	PFFP	2.954	SLV 3	Si
Maschio 234	R	0.072	SLV 5	No
Maschio 235	PF SLU	1.795	SLU 37	Si
Maschio 235	V SLU	0.791	SLU 41	No
Maschio 235	PF	1.572	SLV 13	Si
Maschio 235	V	0.992	SLV 13	No
Maschio 235	PFFP	1.202	SLV 3	Si
Maschio 235	R	0.096	SLV 13	No
Maschio 236	PF SLU	5.615	SLU 50	Si
Maschio 236	V SLU	64.654	SLU 50	Si
Maschio 236	PF	1.856	SLV 13	Si
Maschio 236	V	1.987	SLV 13	Si
Maschio 236	PFFP	0	SLV 5	No
Maschio 236	R	0.011	SLV 1	No
Maschio 237	PF SLU	0	SLU 51	No
Maschio 237	V SLU	0	SLU 1	No
Maschio 237	PF	0	SLV 16	No
Maschio 237	V	0	SLV 1	No
Maschio 237	PFFP	0	SLV 8	No
Maschio 237	R	0	SLV 16	No
Maschio 238	PF SLU	2.711	SLU 29	Si
Maschio 238	V SLU	11.325	SLU 71	Si
Maschio 238	PF	0	SLV 7	No
Maschio 238	V	0	SLV 7	No
Maschio 238	PFFP	0.988	SLV 7	No
Maschio 238	R	0.1	SLV 1	No
Maschio 239	PF SLU	0	SLU 84	No
Maschio 239	V SLU	0	SLU 1	No
Maschio 239	PF	0	SLV 12	No
Maschio 239	V	0	SLV 1	No
Maschio 239	PFFP	0	SLV 12	No
Maschio 239	R	0	SLV 10	No
Maschio 240	PF SLU	2.799	SLU 39	Si
Maschio 240	V SLU	17.857	SLU 79	Si
Maschio 240	PF	1.216	SLV 7	Si
Maschio 240	V	0.848	SLV 7	No
Maschio 240	PFFP	0	SLV 5	No
Maschio 240	R	0	SLV 12	No
Maschio 241	PF SLU	0	SLU 39	No
Maschio 241	V SLU	0	SLU 39	No
Maschio 241	PF	0	SLV 1	No
Maschio 241	V	0	SLV 1	No
Maschio 241	PFFP	0	SLV 15	No
Maschio 241	R	0.113	SLV 3	No
Maschio 242	PF SLU	1.299	SLU 8	Si
Maschio 242	V SLU	10.123	SLU 34	Si
Maschio 242	PF	0	SLV 3	No
Maschio 242	V	0	SLV 3	No
Maschio 242	PFFP	0	SLV 1	No
Maschio 242	R	0.029	SLV 15	No
Maschio 243	PF SLU	0	SLU 2	No

Desc.	Stato limite	Coeff.s.	Comb.	Verifica
Maschio 243	V SLU	0	SLU 2	No
Maschio 243	PF	0	SLV 4	No
Maschio 243	V	0	SLV 1	No
Maschio 243	PFFP	0	SLV 4	No
Maschio 243	R	0	SLV 12	No
Maschio 244	PF SLU	1.387	SLU 50	Si
Maschio 244	V SLU	7.585	SLU 83	Si
Maschio 244	PF	0	SLV 5	No
Maschio 244	V	0	SLV 5	No
Maschio 244	PFFP	0	SLV 1	No
Maschio 244	R	0.024	SLV 3	No
Maschio 245	PF SLU	1.264	SLU 51	Si
Maschio 245	V SLU	2.375	SLU 51	Si
Maschio 245	PF	0	SLV 12	No
Maschio 245	V	0	SLV 1	No
Maschio 245	PFFP	0	SLV 10	No
Maschio 245	R	0	SLV 6	No
Maschio 246	PF SLU	0	SLU 84	No
Maschio 246	V SLU	0	SLU 1	No
Maschio 246	PF	0	SLV 16	No
Maschio 246	V	0	SLV 1	No
Maschio 246	PFFP	0	SLV 4	No
Maschio 246	R	0	SLV 11	No
Maschio 247	PF SLU	1.049	SLU 10	Si
Maschio 247	V SLU	0.981	SLU 10	No
Maschio 247	PF	0	SLV 2	No
Maschio 247	V	0	SLV 1	No
Maschio 247	PFFP	0	SLV 12	No
Maschio 247	R	0.09	SLV 11	No
Maschio 248	PF SLU	7.63	SLU 9	Si
Maschio 248	V SLU	15.394	SLU 45	Si
Maschio 248	PF	1.628	SLV 15	Si
Maschio 248	V	2.657	SLV 3	Si
Maschio 248	PFFP	0	SLV 3	No
Maschio 248	R	0.09	SLV 7	No
Maschio 249	PF SLU	3.176	SLU 39	Si
Maschio 249	V SLU	2.377	SLU 77	Si
Maschio 249	PF	1.671	SLV 11	Si
Maschio 249	V	1.318	SLV 11	Si
Maschio 249	PFFP	1.196	SLV 7	Si
Maschio 249	R	0.075	SLV 5	No
Maschio 250	PF SLU	3.208	SLU 42	Si
Maschio 250	V SLU	3.583	SLU 80	Si
Maschio 250	PF	0	SLV 5	No
Maschio 250	V	0	SLV 5	No
Maschio 250	PFFP	0	SLV 1	No
Maschio 250	R	0	SLV 12	No
Maschio 251	PF SLU	3.288	SLU 40	Si
Maschio 251	V SLU	2.137	SLU 78	Si
Maschio 251	PF	1.62	SLV 15	Si
Maschio 251	V	1.312	SLV 15	Si
Maschio 251	PFFP	0	SLV 5	No
Maschio 251	R	0.103	SLV 13	No
Maschio 252	PF SLU	31.908	SLU 10	Si
Maschio 252	V SLU	42.587	SLU 31	Si
Maschio 252	PF	2.411	SLV 11	Si
Maschio 252	V	2.085	SLV 5	Si
Maschio 252	PFFP	1.309	SLV 1	Si
Maschio 252	R	0.072	SLV 1	No
Maschio 253	PF SLU	0	SLU 2	No
Maschio 253	V SLU	0	SLU 2	No
Maschio 253	PF	0	SLV 14	No
Maschio 253	V	0	SLV 1	No
Maschio 253	PFFP	0	SLV 14	No
Maschio 253	R	0	SLV 14	No
Maschio 254	PF SLU	0	SLU 31	No
Maschio 254	V SLU	0	SLU 2	No
Maschio 254	PF	0	SLV 16	No
Maschio 254	V	0	SLV 1	No
Maschio 254	PFFP	0	SLV 16	No
Maschio 254	R	0	SLV 16	No
Maschio 255	PF SLU	3.182	SLU 26	Si
Maschio 255	V SLU	2.213	SLU 80	Si
Maschio 255	PF	0	SLV 2	No
Maschio 255	V	0	SLV 1	No
Maschio 255	PFFP	0	SLV 1	No
Maschio 255	R	0	SLV 6	No
Maschio 256	PF SLU	3.122	SLU 39	Si
Maschio 256	V SLU	3.256	SLU 81	Si
Maschio 256	PF	1.242	SLV 13	Si
Maschio 256	V	0.44	SLV 13	No
Maschio 256	PFFP	1.589	SLV 7	Si
Maschio 256	R	0.031	SLV 11	No
Maschio 257	PF SLU	5.563	SLU 18	Si
Maschio 257	V SLU	3.874	SLU 72	Si
Maschio 257	PF	0	SLV 11	No
Maschio 257	V	0	SLV 11	No
Maschio 257	PFFP	1.456	SLV 11	Si
Maschio 257	R	0.051	SLV 7	No
Maschio 258	PF SLU	2.806	SLU 31	Si
Maschio 258	V SLU	2.198	SLU 76	Si

Desc.	Stato limite	Coeff.s.	Comb.	Verifica
Maschio 258	PF	0	SLV 14	No
Maschio 258	V	0	SLV 9	No
Maschio 258	PFFP	0	SLV 14	No
Maschio 258	R	0	SLV 14	No
Maschio 259	PF SLU	0	SLU 73	No
Maschio 259	V SLU	0	SLU 2	No
Maschio 259	PF	0	SLV 16	No
Maschio 259	V	0	SLV 1	No
Maschio 259	PFFP	0	SLV 12	No
Maschio 259	R	0	SLV 14	No
Maschio 260	PF SLU	0	SLU 34	No
Maschio 260	V SLU	0	SLU 2	No
Maschio 260	PF	0	SLV 16	No
Maschio 260	V	0	SLV 1	No
Maschio 260	PFFP	0	SLV 14	No
Maschio 260	R	0	SLV 16	No
Maschio 261	PF SLU	8.248	SLU 37	Si
Maschio 261	V SLU	7.18	SLU 80	Si
Maschio 261	PF	5.326	SLV 15	Si
Maschio 261	V	2.234	SLV 1	Si
Maschio 261	PFFP	2.834	SLV 11	Si
Maschio 261	R	0	SLV 5	No
Maschio 262	PF SLU	1.297	SLU 38	Si
Maschio 262	V SLU	4.718	SLU 30	Si
Maschio 262	PF	0	SLV 7	No
Maschio 262	V	0	SLV 7	No
Maschio 262	PFFP	22.459	SLV 11	Si
Maschio 262	R	0	SLV 7	No
Maschio 263	PF SLU	0	SLU 1	No
Maschio 263	V SLU	0	SLU 1	No
Maschio 263	PF	0	SLV 1	No
Maschio 263	V	0	SLV 1	No
Maschio 263	PFFP	4.445	SLV 5	Si
Maschio 263	R	0.031	SLV 9	No
Maschio 264	PF SLU	1.569	SLU 83	Si
Maschio 264	V SLU	1.078	SLU 82	Si
Maschio 264	PF	0	SLV 16	No
Maschio 264	V	0	SLV 11	No
Maschio 264	PFFP	2.495	SLV 7	Si
Maschio 264	R	0.183	SLV 1	No
Maschio 265	PF SLU	1.446	SLU 83	Si
Maschio 265	V SLU	1.052	SLU 83	Si
Maschio 265	PF	0	SLV 12	No
Maschio 265	V	0	SLV 3	No
Maschio 265	PFFP	2.865	SLV 11	Si
Maschio 265	R	0	SLV 12	No
Maschio 266	PF SLU	6.147	SLU 82	Si
Maschio 266	V SLU	7.937	SLU 44	Si
Maschio 266	PF	0	SLV 16	No
Maschio 266	V	0	SLV 3	No
Maschio 266	PFFP	4.269	SLV 11	Si
Maschio 266	R	0.092	SLV 3	No
Maschio 267	PF SLU	4.989	SLU 83	Si
Maschio 267	V SLU	5.685	SLU 80	Si
Maschio 267	PF	0	SLV 4	No
Maschio 267	V	0	SLV 1	No
Maschio 267	PFFP	3.425	SLV 7	Si
Maschio 267	R	0.092	SLV 15	No
Maschio 268	PF SLU	6.727	SLU 77	Si
Maschio 268	V SLU	6.277	SLU 77	Si
Maschio 268	PF	0	SLV 16	No
Maschio 268	V	0	SLV 1	No
Maschio 268	PFFP	3.517	SLV 7	Si
Maschio 268	R	0.078	SLV 11	No
Maschio 269	PF SLU	5.363	SLU 80	Si
Maschio 269	V SLU	8.085	SLU 51	Si
Maschio 269	PF	0	SLV 4	No
Maschio 269	V	0	SLV 1	No
Maschio 269	PFFP	3.095	SLV 11	Si
Maschio 269	R	0.078	SLV 7	No
Maschio 270	PF SLU	52.504	SLU 51	Si
Maschio 270	V SLU	60.829	SLU 61	Si
Maschio 270	PF	1.927	SLV 11	Si
Maschio 270	V	2.555	SLV 3	Si
Maschio 270	PFFP	10.025	SLV 7	Si
Maschio 270	R	0	SLV 7	No
Maschio 271	PF SLU	1.314	SLU 18	Si
Maschio 271	V SLU	3.244	SLU 81	Si
Maschio 271	PF	0	SLV 12	No
Maschio 271	V	0	SLV 1	No
Maschio 271	PFFP	0	SLV 12	No
Maschio 271	R	0	SLV 12	No
Maschio 274	PF SLU	7.435	SLU 71	Si
Maschio 274	V SLU	3.349	SLU 80	Si
Maschio 274	PF	0	SLV 16	No
Maschio 274	V	0	SLV 1	No
Maschio 274	PFFP	0.979	SLV 11	No
Maschio 274	R	0	SLV 16	No
Maschio 275	PF SLU	6.101	SLU 79	Si
Maschio 275	V SLU	6.286	SLU 50	Si
Maschio 275	PF	0	SLV 8	No

Desc.	Stato limite	Coeff.s.	Comb.	Verifica
Maschio 275	V	0	SLV 1	No
Maschio 275	PFFP	0	SLV 7	No
Maschio 275	R	0	SLV 12	No
Maschio 276	PF SLU	1.623	SLU 36	Si
Maschio 276	V SLU	9.233	SLU 77	Si
Maschio 276	PF	1.526	SLV 11	Si
Maschio 276	V	4.634	SLV 7	Si
Maschio 276	PFFP	5.289	SLV 7	Si
Maschio 276	R	0	SLV 1	No
Maschio 277	PF SLU	2.697	SLU 30	Si
Maschio 277	V SLU	13.756	SLU 77	Si
Maschio 277	PF	1.569	SLV 5	Si
Maschio 277	V	2.774	SLV 9	Si
Maschio 277	PFFP	3.882	SLV 9	Si
Maschio 277	R	0	SLV 1	No

Verifica maschi in muratura

Maschio	Stato limite	Molt.	Comb.	PGA	iPGA (ζE)	TR	(TR/TRrif)^.41	Verifica
1	PF	1.459	SLV 13	0.348	1.424	1415	1.564	Si
	V	1.356	SLV 13	0.325	1.33	1128	1.426	Si
	PFFP	1.717	SLV 13	0.362	1.483	1618	1.653	Si
	R	0.241	SLV 3	0.055	0.226	12	0.221	No
2	PF	1.244	SLV 13	0.299	1.226	873	1.283	Si
	V	0.803	SLV 15	0.194	0.796	259	0.78	No
	PFFP	1.38	SLV 9	0.33	1.352	1191	1.458	Si
	R	0.203	SLV 1	0.047	0.191	8	0.187	No
3	PF	1.672	SLV 9	0.362	1.483	1618	1.653	Si
	V	0.729	SLV 7	0.175	0.718	198	0.699	No
	PFFP	2.097	SLV 9	0.362	1.483	1618	1.653	Si
	R	0.22	SLV 1	0.051	0.21	10	0.205	No
4	PF	1.005	SLV 5	0.245	1.005	481	1.005	Si
	V	0.223	SLV 11	0.051	0.21	10	0.205	No
	PFFP	1.621	SLV 9	0.362	1.483	1618	1.653	Si
	R	0.273	SLV 1	0.064	0.262	18	0.261	No
5	PF	0.681	SLV 11	0.163	0.667	167	0.651	No
	V	0.506	SLV 11	0.119	0.487	80	0.482	No
	PFFP	2.126	SLV 15	0.362	1.483	1618	1.653	Si
	R	0.131	SLV 13	0.031	0.127	3	0.125	No
6	PF	0.814	SLV 9	0.197	0.808	269	0.792	No
	V	0.733	SLV 9	0.177	0.723	201	0.703	No
	PFFP	1.57	SLV 5	0.362	1.483	1618	1.653	Si
	R	0.139	SLV 13	0.031	0.127	3	0.125	No
7	PF	1.404	SLV 11	0.336	1.374	1256	1.49	Si
	V	0.911	SLV 15	0.221	0.907	366	0.899	No
	PFFP	1.597	SLV 11	0.362	1.483	1618	1.653	Si
	R	0.09	SLV 5	0.02	0.08	1	0.08	No
8	PF	1.552	SLV 11	0.362	1.483	1618	1.653	Si
	V	0.797	SLV 3	0.193	0.789	253	0.772	No
	PFFP	1.752	SLV 11	0.362	1.483	1618	1.653	Si
	R	0.053	SLV 5	0	0	0	0	No
9	PF	2.157	SLV 7	0.362	1.483	1618	1.653	Si
	V	0.549	SLV 13	0.129	0.53	98	0.524	No
	PFFP	3.09	SLV 7	0.362	1.483	1618	1.653	Si
	R	0.167	SLV 1	0.038	0.157	5	0.155	No
10	PF	0.618	SLV 15	0.147	0.6	131	0.59	No
	V	0.46	SLV 15	0.108	0.442	63	0.437	No
	PFFP	3.422	SLV 7	0.362	1.483	1618	1.653	Si
	R	0.232	SLV 13	0.053	0.218	11	0.214	No
11	PF	2.171	SLV 13	0.362	1.483	1618	1.653	Si
	V	0.668	SLV 11	0.159	0.652	158	0.637	No
	PFFP	1000	SLV 1	0.362	1.483	1618	1.653	Si
	R	0.098	SLV 13	0.02	0.08	1	0.08	No
12	PF	0.381	SLV 9	0.09	0.368	40	0.363	No
	V	0.382	SLV 9	0.09	0.368	40	0.363	No
	PFFP	1.45	SLV 11	0.346	1.416	1388	1.552	Si
	R	0.176	SLV 7	0.041	0.169	6	0.167	No
13	PF	0.598	SLV 11	0.142	0.58	121	0.571	No
	V	0.6	SLV 11	0.142	0.583	122	0.573	No
	PFFP	0.942	SLV 11	0.229	0.939	401	0.933	No
	R	0.275	SLV 5	0.064	0.262	18	0.261	No
14	PF	1.38	SLV 11	0.33	1.352	1191	1.458	Si
	V	0.567	SLV 7	0.134	0.548	106	0.541	No
	PFFP	2.841	SLV 15	0.362	1.483	1618	1.653	Si
	R	0.065	SLV 13	0	0	0	0	No
15	PF	1.296	SLV 7	0.311	1.274	980	1.346	Si
	V	0.835	SLV 9	0.202	0.828	288	0.815	No
	PFFP	1.649	SLV 7	0.362	1.483	1618	1.653	Si
	R	0.519	SLV 13	0.122	0.501	85	0.494	No
16	PF	1.251	SLV 7	0.301	1.232	887	1.292	Si
	V	0.771	SLV 9	0.186	0.763	232	0.745	No
	PFFP	1.757	SLV 7	0.362	1.483	1618	1.653	Si
	R	1.098	SLV 7	0.267	1.091	616	1.112	Si
18	PF	3.97	SLV 5	0.362	1.483	1618	1.653	Si
	V	1.436	SLV 11	0.343	1.403	1347	1.533	Si
	PFFP	1000	SLV 1	0.362	1.483	1618	1.653	Si
	R	0.562	SLV 13	0.133	0.544	104	0.536	No
19	PF	2.075	SLV 3	0.362	1.483	1618	1.653	Si
	V	0.505	SLV 1	0.119	0.487	80	0.482	No
	PFFP	1000	SLV 1	0.362	1.483	1618	1.653	Si
	R	0.247	SLV 1	0.057	0.234	13	0.229	No
20	PF	1.514	SLV 3	0.36	1.475	1590	1.641	Si

Maschio	Stato limite	Molt.	Comb.	PGA	iPGA (ζE)	TR	(TR/TRrif)^.41	Verifica
	V	0.904	SLV 3	0.22	0.9	359	0.892	No
	PFFP	1000	SLV 1	0.362	1.483	1618	1.653	Si
	R	0.101	SLV 5	0.02	0.08	1	0.08	No
21	PF	1.079	SLV 1	0.262	1.073	587	1.091	Si
	V	1.104	SLV 1	0.268	1.097	625	1.119	Si
	PFFP	3.095	SLV 3	0.362	1.483	1618	1.653	Si
	R	0.096	SLV 5	0.02	0.08	1	0.08	No
22	PF	1.628	SLV 13	0.362	1.483	1618	1.653	Si
	V	1.765	SLV 13	0.362	1.483	1618	1.653	Si
	PFFP	1000	SLV 1	0.362	1.483	1618	1.653	Si
	R	0	SLV 1	0	0	0	0	No
23	PF	2.369	SLV 13	0.362	1.483	1618	1.653	Si
	V	1.037	SLV 13	0.253	1.035	526	1.043	Si
	PFFP	1000	SLV 1	0.362	1.483	1618	1.653	Si
	R	0.155	SLV 5	0.035	0.143	4	0.141	No
24	PF	1.904	SLV 15	0.362	1.483	1618	1.653	Si
	V	0.548	SLV 13	0.129	0.53	98	0.524	No
	PFFP	3.125	SLV 7	0.362	1.483	1618	1.653	Si
	R	0.275	SLV 13	0.064	0.262	18	0.261	No
25	PF	0.052	SLV 3	0	0	0	0	No
	V	0	SLV 1	0	0	0	0	No
	PFFP	2.141	SLV 15	0.362	1.483	1618	1.653	Si
	R	0.169	SLV 1	0.038	0.157	5	0.155	No
26	PF	2.864	SLV 3	0.362	1.483	1618	1.653	Si
	V	1.494	SLV 15	0.356	1.456	1522	1.612	Si
	PFFP	1000	SLV 1	0.362	1.483	1618	1.653	Si
	R	0.176	SLV 13	0.041	0.169	6	0.167	No
27	PF	1.598	SLV 9	0.362	1.483	1618	1.653	Si
	V	1.245	SLV 15	0.3	1.227	875	1.285	Si
	PFFP	1.591	SLV 9	0.362	1.483	1618	1.653	Si
	R	0.221	SLV 5	0.051	0.21	10	0.205	No
28	PF	1.623	SLV 9	0.362	1.483	1618	1.653	Si
	V	1.042	SLV 1	0.254	1.039	532	1.048	Si
	PFFP	1.604	SLV 9	0.362	1.483	1618	1.653	Si
	R	0.167	SLV 5	0.038	0.157	5	0.155	No
29	PF	1.653	SLV 5	0.362	1.483	1618	1.653	Si
	V	1.085	SLV 13	0.264	1.079	596	1.098	Si
	PFFP	1.653	SLV 5	0.362	1.483	1618	1.653	Si
	R	0.22	SLV 9	0.051	0.21	10	0.205	No
30	PF	1.029	SLV 5	0.251	1.027	514	1.033	Si
	V	0.929	SLV 1	0.226	0.926	387	0.919	No
	PFFP	1.173	SLV 1	0.283	1.16	740	1.199	Si
	R	0.332	SLV 3	0.078	0.318	28	0.313	No
31	PF	1.677	SLV 11	0.362	1.483	1618	1.653	Si
	V	1.141	SLV 5	0.276	1.131	686	1.163	Si
	PFFP	2.351	SLV 11	0.362	1.483	1618	1.653	Si
	R	0.531	SLV 1	0.125	0.513	90	0.506	No
32	PF	1.54	SLV 11	0.362	1.483	1618	1.653	Si
	V	1.173	SLV 11	0.283	1.16	740	1.199	Si
	PFFP	2.054	SLV 11	0.362	1.483	1618	1.653	Si
	R	1.687	SLV 9	0.362	1.483	1618	1.653	Si
33	PF	3.025	SLV 9	0.362	1.483	1618	1.653	Si
	V	1.423	SLV 11	0.34	1.391	1310	1.516	Si
	PFFP	1000	SLV 1	0.362	1.483	1618	1.653	Si
	R	0.414	SLV 3	0.098	0.399	49	0.394	No
35	PF	1.271	SLV 9	0.306	1.251	927	1.315	Si
	V	0.335	SLV 11	0.079	0.323	30	0.322	No
	PFFP	2.435	SLV 9	0.362	1.483	1618	1.653	Si
	R	0.33	SLV 3	0.078	0.318	28	0.313	No
36	PF	1.754	SLV 5	0.362	1.483	1618	1.653	Si
	V	0.904	SLV 7	0.22	0.9	359	0.892	No
	PFFP	1000	SLV 1	0.362	1.483	1618	1.653	Si
	R	0.165	SLV 13	0.038	0.157	5	0.155	No
37	PF	0.575	SLV 7	0.136	0.558	110	0.549	No
	V	0.571	SLV 7	0.135	0.553	108	0.545	No
	PFFP	0.92	SLV 7	0.224	0.917	377	0.91	No
	R	0.303	SLV 13	0.071	0.292	23	0.289	No
38	PF	1.393	SLV 15	0.333	1.364	1226	1.475	Si
	V	1.362	SLV 15	0.326	1.335	1144	1.434	Si
	PFFP	1.796	SLV 15	0.362	1.483	1618	1.653	Si
	R	0.337	SLV 7	0.079	0.323	30	0.322	No
39	PF	1.013	SLV 15	0.247	1.012	492	1.015	Si
	V	0.937	SLV 15	0.228	0.934	396	0.928	No
	PFFP	2.065	SLV 11	0.362	1.483	1618	1.653	Si
	R	0.616	SLV 1	0.146	0.598	129	0.586	No
40	PF	2.068	SLV 11	0.362	1.483	1618	1.653	Si
	V	1.019	SLV 1	0.249	1.018	500	1.021	Si
	PFFP	2.794	SLV 11	0.362	1.483	1618	1.653	Si
	R	2.12	SLV 11	0.362	1.483	1618	1.653	Si
41	PF	1.124	SLV 7	0.273	1.115	658	1.143	Si
	V	0.431	SLV 5	0.101	0.414	53	0.407	No
	PFFP	1.825	SLV 7	0.362	1.483	1618	1.653	Si
	R	0.748	SLV 7	0.181	0.74	213	0.72	No
42	PF	1.155	SLV 7	0.279	1.144	709	1.178	Si
	V	0.982	SLV 7	0.24	0.982	452	0.98	No
	PFFP	1.376	SLV 7	0.329	1.348	1180	1.452	Si
	R	0.188	SLV 11	0.044	0.181	7	0.177	No
43	PF	2.417	SLV 11	0.362	1.483	1618	1.653	Si
	V	0.971	SLV 7	0.237	0.97	437	0.966	No
	PFFP	1000	SLV 1	0.362	1.483	1618	1.653	Si
	R	0.174	SLV 13	0.038	0.157	5	0.155	No

Maschio	Stato limite	Molt.	Comb.	PGA	iPGA (ζE)	TR	(TR/TRrif)^.41	Verifica
44	PF	1.25	SLV 9	0.301	1.231	885	1.291	Si
	V	0.931	SLV 9	0.227	0.928	389	0.921	No
	PFFP	1000	SLV 1	0.362	1.483	1618	1.653	Si
	R	0.173	SLV 15	0.038	0.157	5	0.155	No
45	PF	1.034	SLV 9	0.252	1.032	521	1.039	Si
	V	1.039	SLV 9	0.253	1.036	528	1.044	Si
	PFFP	1.405	SLV 9	0.336	1.375	1259	1.491	Si
	R	0.31	SLV 15	0.073	0.298	24	0.294	No
46	PF	1.461	SLV 7	0.348	1.426	1421	1.567	Si
	V	0.754	SLV 15	0.182	0.746	218	0.727	No
	PFFP	1.556	SLV 7	0.362	1.483	1618	1.653	Si
	R	0.082	SLV 5	0	0	0	0	No
47	PF	1.014	SLV 7	0.248	1.013	493	1.015	Si
	V	0.812	SLV 3	0.197	0.805	267	0.79	No
	PFFP	1.288	SLV 7	0.309	1.267	963	1.336	Si
	R	0.105	SLV 9	0.02	0.08	1	0.08	No
48	PF	1.266	SLV 5	0.304	1.246	917	1.31	Si
	V	0.568	SLV 11	0.135	0.551	107	0.543	No
	PFFP	1.425	SLV 9	0.34	1.393	1316	1.519	Si
	R	0.334	SLV 3	0.078	0.318	28	0.313	No
49	PF	1.103	SLV 5	0.268	1.096	624	1.118	Si
	V	0.75	SLV 3	0.181	0.741	214	0.721	No
	PFFP	1.198	SLV 5	0.289	1.183	785	1.229	Si
	R	0.256	SLV 5	0.059	0.242	14	0.236	No
50	PF	1.362	SLV 1	0.326	1.335	1144	1.434	Si
	V	1.355	SLV 1	0.325	1.329	1125	1.424	Si
	PFFP	1.552	SLV 1	0.362	1.483	1618	1.653	Si
	R	0.328	SLV 13	0.077	0.313	27	0.309	No
51	PF	1.427	SLV 13	0.341	1.395	1321	1.521	Si
	V	1.176	SLV 9	0.284	1.163	746	1.203	Si
	PFFP	1.854	SLV 13	0.362	1.483	1618	1.653	Si
	R	0.072	SLV 1	0	0	0	0	No
52	PF	0.837	SLV 13	0.203	0.83	290	0.817	No
	V	0.404	SLV 3	0.095	0.388	45	0.381	No
	PFFP	0.975	SLV 9	0.238	0.973	441	0.97	No
	R	0.073	SLV 1	0	0	0	0	No
53	PF	0.783	SLV 9	0.189	0.775	242	0.758	No
	V	0.424	SLV 13	0.1	0.41	52	0.404	No
	PFFP	1.336	SLV 9	0.32	1.311	1077	1.399	Si
	R	0.074	SLV 1	0	0	0	0	No
54	PF	0.74	SLV 7	0.179	0.731	207	0.711	No
	V	0.191	SLV 3	0.044	0.181	7	0.177	No
	PFFP	1.231	SLV 11	0.297	1.214	847	1.268	Si
	R	0.074	SLV 1	0	0	0	0	No
55	PF	0.79	SLV 7	0.191	0.783	248	0.766	No
	V	0.202	SLV 15	0.047	0.191	8	0.187	No
	PFFP	1.016	SLV 7	0.248	1.015	496	1.018	Si
	R	0.077	SLV 13	0	0	0	0	No
56	PF	0.495	SLV 13	0.116	0.477	75	0.469	No
	V	0.365	SLV 15	0.086	0.351	36	0.347	No
	PFFP	2.163	SLV 11	0.362	1.483	1618	1.653	Si
	R	0.076	SLV 1	0	0	0	0	No
57	PF	0.076	SLV 7	0	0	0	0	No
	V	0.633	SLV 11	0.151	0.617	139	0.604	No
	PFFP	1.555	SLV 9	0.362	1.483	1618	1.653	Si
	R	0.072	SLV 1	0	0	0	0	No
58	PF	1.379	SLV 15	0.33	1.351	1188	1.456	Si
	V	0.451	SLV 7	0.107	0.436	61	0.431	No
	PFFP	1.922	SLV 13	0.362	1.483	1618	1.653	Si
	R	0.022	SLV 1	0	0	0	0	No
59	PF	1.102	SLV 1	0.267	1.095	622	1.117	Si
	V	0.479	SLV 3	0.112	0.46	69	0.453	No
	PFFP	1.344	SLV 15	0.322	1.318	1097	1.409	Si
	R	0.074	SLV 13	0	0	0	0	No
60	PF	0.81	SLV 11	0.196	0.803	265	0.787	No
	V	0.517	SLV 11	0.122	0.498	84	0.491	No
	PFFP	1.556	SLV 15	0.362	1.483	1618	1.653	Si
	R	0.021	SLV 1	0	0	0	0	No
61	PF	0	SLV 1	0	0	0	0	No
	V	0	SLV 1	0	0	0	0	No
	PFFP	0.433	SLV 11	0.102	0.417	54	0.41	No
	R	0.081	SLV 1	0	0	0	0	No
62	PF	0.689	SLV 15	0.165	0.674	171	0.658	No
	V	0	SLV 1	0	0	0	0	No
	PFFP	1.245	SLV 7	0.3	1.227	875	1.285	Si
	R	0.074	SLV 1	0	0	0	0	No
63	PF	0.336	SLV 5	0.079	0.323	30	0.322	No
	V	0.335	SLV 5	0.079	0.323	30	0.322	No
	PFFP	1.172	SLV 13	0.283	1.16	739	1.199	Si
	R	0.101	SLV 13	0.02	0.08	1	0.08	No
64	PF	0.689	SLV 15	0.165	0.674	171	0.658	No
	V	0.588	SLV 1	0.139	0.569	116	0.561	No
	PFFP	1.063	SLV 11	0.259	1.059	563	1.072	Si
	R	0.087	SLV 1	0.02	0.08	1	0.08	No
65	PF	0	SLV 1	0	0	0	0	No
	V	0	SLV 1	0	0	0	0	No
	PFFP	0.297	SLV 5	0.07	0.286	22	0.284	No
	R	0	SLV 1	0	0	0	0	No
66	PF	2.196	SLV 9	0.362	1.483	1618	1.653	Si
	V	0.333	SLV 7	0.078	0.318	28	0.313	No
	PFFP	2.413	SLV 9	0.362	1.483	1618	1.653	Si

Maschio	Stato limite	Molt.	Comb.	PGA	iPGA (ζE)	TR	(TR/TRrif)^.41	Verifica
	R	0.022	SLV 1	0	0	0	0	No
67	PF	1.29	SLV 7	0.31	1.269	967	1.338	Si
	V	0.628	SLV 9	0.149	0.61	136	0.599	No
	PFFP	1.642	SLV 11	0.362	1.483	1618	1.653	Si
	R	0.287	SLV 1	0.067	0.275	20	0.273	No
68	PF	1.418	SLV 11	0.339	1.387	1296	1.509	Si
	V	0.981	SLV 7	0.239	0.979	449	0.977	No
	PFFP	1.696	SLV 11	0.362	1.483	1618	1.653	Si
	R	0.354	SLV 1	0.083	0.342	34	0.339	No
70	PF	1000	SLV 1	0.362	1.483	1618	1.653	Si
	V	1.033	SLV 11	0.252	1.031	520	1.038	Si
	PFFP	1000	SLV 1	0.362	1.483	1618	1.653	Si
	R	0.158	SLV 3	0.035	0.143	4	0.141	No
71	PF	0.456	SLV 7	0.107	0.439	62	0.434	No
	V	0	SLV 1	0	0	0	0	No
	PFFP	2.024	SLV 13	0.362	1.483	1618	1.653	Si
	R	0.038	SLV 1	0	0	0	0	No
72	PF	0.872	SLV 5	0.212	0.867	325	0.856	No
	V	0.367	SLV 1	0.086	0.351	36	0.347	No
	PFFP	1.351	SLV 9	0.324	1.325	1115	1.419	Si
	R	0.074	SLV 1	0	0	0	0	No
73	PF	1.174	SLV 9	0.284	1.161	743	1.201	Si
	V	0.718	SLV 13	0.173	0.706	190	0.687	No
	PFFP	1.532	SLV 9	0.362	1.483	1618	1.653	Si
	R	0.075	SLV 3	0	0	0	0	No
74	PF	1.124	SLV 9	0.273	1.115	658	1.143	Si
	V	0.686	SLV 13	0.164	0.671	169	0.655	No
	PFFP	1.483	SLV 5	0.353	1.446	1488	1.597	Si
	R	0.075	SLV 1	0	0	0	0	No
75	PF	0.8	SLV 9	0.194	0.793	257	0.777	No
	V	0.419	SLV 13	0.098	0.403	50	0.397	No
	PFFP	1.174	SLV 5	0.284	1.161	743	1.201	Si
	R	0.076	SLV 15	0	0	0	0	No
76	PF	0.745	SLV 7	0.18	0.736	211	0.717	No
	V	0.132	SLV 1	0.031	0.127	3	0.125	No
	PFFP	1.226	SLV 15	0.295	1.209	838	1.262	Si
	R	0.071	SLV 1	0	0	0	0	No
77	PF	1.983	SLV 11	0.362	1.483	1618	1.653	Si
	V	0.702	SLV 13	0.168	0.689	180	0.672	No
	PFFP	3.79	SLV 11	0.362	1.483	1618	1.653	Si
	R	0.073	SLV 1	0	0	0	0	No
78	PF	1.91	SLV 7	0.362	1.483	1618	1.653	Si
	V	0.64	SLV 15	0.152	0.623	142	0.61	No
	PFFP	1000	SLV 1	0.362	1.483	1618	1.653	Si
	R	0.073	SLV 1	0	0	0	0	No
79	PF	0.464	SLV 11	0.11	0.448	65	0.442	No
	V	0.12	SLV 13	0.026	0.107	2	0.106	No
	PFFP	0.884	SLV 7	0.215	0.88	338	0.87	No
	R	0.075	SLV 1	0	0	0	0	No
80	PF	1.903	SLV 1	0.362	1.483	1618	1.653	Si
	V	0.75	SLV 13	0.181	0.741	214	0.721	No
	PFFP	1000	SLV 1	0.362	1.483	1618	1.653	Si
	R	0.021	SLV 1	0	0	0	0	No
81	PF	0.584	SLV 1	0.139	0.567	115	0.559	No
	V	0.545	SLV 1	0.129	0.528	97	0.521	No
	PFFP	1.037	SLV 1	0.253	1.035	526	1.043	Si
	R	0.022	SLV 1	0	0	0	0	No
82	PF	1.336	SLV 7	0.32	1.311	1077	1.399	Si
	V	0.599	SLV 5	0.142	0.583	122	0.573	No
	PFFP	1.532	SLV 7	0.362	1.483	1618	1.653	Si
	R	0.283	SLV 13	0.066	0.269	19	0.267	No
83	PF	1.323	SLV 7	0.317	1.299	1045	1.382	Si
	V	0.951	SLV 11	0.232	0.949	413	0.944	No
	PFFP	1.641	SLV 7	0.362	1.483	1618	1.653	Si
	R	0.356	SLV 13	0.083	0.342	34	0.339	No
84	PF	3.056	SLV 11	0.362	1.483	1618	1.653	Si
	V	0.958	SLV 11	0.234	0.956	422	0.953	No
	PFFP	1000	SLV 1	0.362	1.483	1618	1.653	Si
	R	0.15	SLV 1	0.035	0.143	4	0.141	No
86	PF	0	SLV 1	0	0	0	0	No
	V	0	SLV 1	0	0	0	0	No
	PFFP	1.402	SLV 1	0.335	1.372	1251	1.487	Si
	R	0.037	SLV 13	0	0	0	0	No
87	PF	0	SLV 1	0	0	0	0	No
	V	0	SLV 1	0	0	0	0	No
	PFFP	0.459	SLV 7	0.108	0.442	63	0.437	No
	R	0.023	SLV 1	0	0	0	0	No
88	PF	1.212	SLV 11	0.292	1.196	811	1.245	Si
	V	0.537	SLV 11	0.127	0.518	93	0.512	No
	PFFP	2.812	SLV 5	0.362	1.483	1618	1.653	Si
	R	0.022	SLV 1	0	0	0	0	No
89	PF	0.661	SLV 3	0.157	0.644	154	0.63	No
	V	0.533	SLV 13	0.126	0.516	91	0.508	No
	PFFP	0.987	SLV 7	0.241	0.986	458	0.985	No
	R	0.087	SLV 13	0.02	0.08	1	0.08	No
90	PF	0.295	SLV 7	0.069	0.281	21	0.278	No
	V	0.292	SLV 7	0.069	0.281	21	0.278	No
	PFFP	1.277	SLV 5	0.307	1.256	940	1.323	Si
	R	0.086	SLV 1	0.02	0.08	1	0.08	No
91	PF	0.114	SLV 3	0.026	0.107	2	0.106	No
	V	0	SLV 1	0	0	0	0	No

Maschio	Stato limite	Molt.	Comb.	PGA	iPGA (ζE)	TR	(TR/TRrif)^.41	Verifica
	PFFP	1.009	SLV 11	0.246	1.009	487	1.01	Si
	R	0.075	SLV 13	0	0	0	0	No
92	PF	0.115	SLV 5	0.026	0.107	2	0.106	No
	V	0.115	SLV 5	0.026	0.107	2	0.106	No
	PFFP	0.623	SLV 7	0.148	0.606	134	0.595	No
	R	0.073	SLV 15	0	0	0	0	No
93	PF	0.137	SLV 7	0.031	0.127	3	0.125	No
	V	0.227	SLV 5	0.053	0.218	11	0.214	No
	PFFP	0.342	SLV 5	0.08	0.328	31	0.327	No
	R	0.044	SLV 13	0	0	0	0	No
94	PF	0.966	SLV 5	0.236	0.964	431	0.961	No
	V	0.659	SLV 7	0.157	0.642	153	0.628	No
	PFFP	3.582	SLV 13	0.362	1.483	1618	1.653	Si
	R	0.021	SLV 1	0	0	0	0	No
95	PF	0.611	SLV 11	0.145	0.593	127	0.582	No
	V	0.256	SLV 15	0.059	0.242	14	0.236	No
	PFFP	0.894	SLV 7	0.217	0.889	348	0.88	No
	R	0.077	SLV 1	0	0	0	0	No
96	PF	3.355	SLV 5	0.362	1.483	1618	1.653	Si
	V	0.663	SLV 11	0.158	0.648	156	0.633	No
	PFFP	3.054	SLV 5	0.362	1.483	1618	1.653	Si
	R	0.022	SLV 1	0	0	0	0	No
97	PF	0	SLV 1	0	0	0	0	No
	V	0	SLV 1	0	0	0	0	No
	PFFP	0.902	SLV 9	0.219	0.898	357	0.89	No
	R	0.07	SLV 3	0	0	0	0	No
98	PF	0	SLV 1	0	0	0	0	No
	V	0.019	SLV 9	0	0	0	0	No
	PFFP	0.683	SLV 5	0.163	0.669	168	0.653	No
	R	0.077	SLV 1	0	0	0	0	No
99	PF	0.585	SLV 1	0.139	0.567	115	0.559	No
	V	0.404	SLV 1	0.095	0.388	45	0.381	No
	PFFP	1.911	SLV 7	0.362	1.483	1618	1.653	Si
	R	0.075	SLV 1	0	0	0	0	No
100	PF	0.589	SLV 11	0.14	0.571	117	0.563	No
	V	0.226	SLV 3	0.053	0.218	11	0.214	No
	PFFP	0.762	SLV 11	0.184	0.754	224	0.735	No
	R	0.08	SLV 1	0	0	0	0	No
101	PF	0.479	SLV 11	0.112	0.46	69	0.453	No
	V	0	SLV 1	0	0	0	0	No
	PFFP	1.075	SLV 7	0.261	1.07	581	1.086	Si
	R	0.075	SLV 1	0	0	0	0	No
102	PF	0.629	SLV 5	0.15	0.612	137	0.601	No
	V	0.402	SLV 1	0.095	0.388	45	0.381	No
	PFFP	1.125	SLV 5	0.273	1.116	660	1.144	Si
	R	0.073	SLV 15	0	0	0	0	No
103	PF	0.746	SLV 1	0.18	0.738	212	0.718	No
	V	0.187	SLV 15	0.044	0.181	7	0.177	No
	PFFP	0.778	SLV 5	0.188	0.771	238	0.753	No
	R	0.076	SLV 13	0	0	0	0	No
104	PF	1.396	SLV 1	0.334	1.366	1234	1.479	Si
	V	1.348	SLV 5	0.323	1.322	1107	1.415	Si
	PFFP	1.644	SLV 1	0.362	1.483	1618	1.653	Si
	R	0.073	SLV 1	0	0	0	0	No
105	PF	1.928	SLV 13	0.362	1.483	1618	1.653	Si
	V	1.659	SLV 9	0.362	1.483	1618	1.653	Si
	PFFP	2.172	SLV 13	0.362	1.483	1618	1.653	Si
	R	0.072	SLV 1	0	0	0	0	No
106	PF	0.927	SLV 13	0.226	0.924	385	0.917	No
	V	0.782	SLV 13	0.189	0.775	242	0.758	No
	PFFP	1.295	SLV 9	0.311	1.273	978	1.345	Si
	R	0.073	SLV 1	0	0	0	0	No
107	PF	1.1	SLV 13	0.267	1.093	619	1.115	Si
	V	0.65	SLV 13	0.155	0.633	148	0.62	No
	PFFP	1.458	SLV 9	0.348	1.423	1412	1.563	Si
	R	0.074	SLV 1	0	0	0	0	No
108	PF	1.289	SLV 15	0.31	1.268	965	1.337	Si
	V	0.711	SLV 3	0.171	0.699	186	0.681	No
	PFFP	1.584	SLV 11	0.362	1.483	1618	1.653	Si
	R	0.072	SLV 1	0	0	0	0	No
109	PF	1.373	SLV 3	0.329	1.345	1173	1.449	Si
	V	0.656	SLV 15	0.156	0.639	151	0.625	No
	PFFP	1.731	SLV 11	0.362	1.483	1618	1.653	Si
	R	0.076	SLV 1	0	0	0	0	No
110	PF	0.422	SLV 13	0.099	0.407	51	0.401	No
	V	0.361	SLV 13	0.085	0.346	35	0.343	No
	PFFP	1.786	SLV 11	0.362	1.483	1618	1.653	Si
	R	0.075	SLV 1	0	0	0	0	No
111	PF	1.639	SLV 5	0.362	1.483	1618	1.653	Si
	V	0.827	SLV 5	0.201	0.821	281	0.806	No
	PFFP	1.391	SLV 9	0.333	1.362	1221	1.473	Si
	R	0.074	SLV 1	0	0	0	0	No
112	PF	2.295	SLV 13	0.362	1.483	1618	1.653	Si
	V	0.659	SLV 9	0.157	0.642	153	0.628	No
	PFFP	1.617	SLV 9	0.362	1.483	1618	1.653	Si
	R	0.021	SLV 1	0	0	0	0	No
113	PF	0.525	SLV 13	0.124	0.508	88	0.501	No
	V	0.309	SLV 13	0.073	0.298	24	0.294	No
	PFFP	1.253	SLV 15	0.302	1.234	891	1.294	Si
	R	0.073	SLV 15	0	0	0	0	No
114	PF	1.537	SLV 11	0.362	1.483	1618	1.653	Si

Maschio	Stato limite	Molt.	Comb.	PGA	iPGA (ζE)	TR	(TR/TRrif)^.41	Verifica
	V	0.627	SLV 11	0.149	0.608	135	0.597	No
	PFFP	1.528	SLV 15	0.362	1.483	1618	1.653	Si
	R	0.021	SLV 1	0	0	0	0	No
115	PF	0	SLV 1	0	0	0	0	No
	V	0	SLV 1	0	0	0	0	No
	PFFP	0.654	SLV 7	0.156	0.637	150	0.623	No
	R	0.076	SLV 1	0	0	0	0	No
116	PF	0.855	SLV 15	0.208	0.85	308	0.837	No
	V	0.409	SLV 15	0.096	0.392	46	0.384	No
	PFFP	1.957	SLV 7	0.362	1.483	1618	1.653	Si
	R	0.073	SLV 1	0	0	0	0	No
117	PF	0.262	SLV 9	0.061	0.249	16	0.249	No
	V	0.261	SLV 9	0.061	0.249	16	0.249	No
	PFFP	1.307	SLV 13	0.314	1.284	1006	1.36	Si
	R	0.079	SLV 3	0	0	0	0	No
118	PF	0.974	SLV 11	0.238	0.972	441	0.97	No
	V	0.762	SLV 15	0.184	0.754	224	0.735	No
	PFFP	1.554	SLV 7	0.362	1.483	1618	1.653	Si
	R	0.086	SLV 13	0.02	0.08	1	0.08	No
119	PF	0	SLV 1	0	0	0	0	No
	V	0	SLV 1	0	0	0	0	No
	PFFP	0.369	SLV 11	0.087	0.355	37	0.351	No
	R	0.019	SLV 3	0	0	0	0	No
120	PF	2.156	SLV 5	0.362	1.483	1618	1.653	Si
	V	0.684	SLV 9	0.163	0.669	168	0.653	No
	PFFP	2.095	SLV 5	0.362	1.483	1618	1.653	Si
	R	0.02	SLV 1	0	0	0	0	No
121	PF	1.579	SLV 11	0.362	1.483	1618	1.653	Si
	V	1.045	SLV 7	0.255	1.042	537	1.052	Si
	PFFP	1.992	SLV 11	0.362	1.483	1618	1.653	Si
	R	0.283	SLV 5	0.066	0.269	19	0.267	No
122	PF	1.773	SLV 11	0.362	1.483	1618	1.653	Si
	V	1.097	SLV 13	0.266	1.09	615	1.112	Si
	PFFP	2.152	SLV 11	0.362	1.483	1618	1.653	Si
	R	0.288	SLV 1	0.067	0.275	20	0.273	No
124	PF	2.879	SLV 11	0.362	1.483	1618	1.653	Si
	V	0.908	SLV 11	0.221	0.904	363	0.896	No
	PFFP	4.084	SLV 11	0.362	1.483	1618	1.653	Si
	R	0.141	SLV 3	0.031	0.127	3	0.125	No
125	PF	0.489	SLV 5	0.115	0.471	73	0.464	No
	V	0.121	SLV 5	0.026	0.107	2	0.106	No
	PFFP	1.441	SLV 11	0.344	1.408	1361	1.54	Si
	R	0.032	SLV 3	0	0	0	0	No
126	PF	1.01	SLV 13	0.247	1.009	488	1.011	Si
	V	0.605	SLV 1	0.143	0.587	124	0.577	No
	PFFP	1.815	SLV 9	0.362	1.483	1618	1.653	Si
	R	0.073	SLV 3	0	0	0	0	No
127	PF	1.512	SLV 13	0.36	1.473	1580	1.637	Si
	V	0.693	SLV 13	0.166	0.68	174	0.662	No
	PFFP	2.172	SLV 9	0.362	1.483	1618	1.653	Si
	R	0.075	SLV 1	0	0	0	0	No
128	PF	1.631	SLV 1	0.362	1.483	1618	1.653	Si
	V	0.76	SLV 13	0.184	0.751	222	0.732	No
	PFFP	2.131	SLV 5	0.362	1.483	1618	1.653	Si
	R	0.075	SLV 1	0	0	0	0	No
129	PF	1.01	SLV 1	0.247	1.009	488	1.011	Si
	V	0.638	SLV 13	0.152	0.621	141	0.608	No
	PFFP	2.209	SLV 5	0.362	1.483	1618	1.653	Si
	R	0.074	SLV 15	0	0	0	0	No
130	PF	1.44	SLV 15	0.344	1.407	1359	1.539	Si
	V	0.124	SLV 1	0.026	0.107	2	0.106	No
	PFFP	1.731	SLV 15	0.362	1.483	1618	1.653	Si
	R	0.072	SLV 1	0	0	0	0	No
131	PF	2.971	SLV 15	0.362	1.483	1618	1.653	Si
	V	0.672	SLV 15	0.161	0.658	161	0.642	No
	PFFP	1000	SLV 1	0.362	1.483	1618	1.653	Si
	R	0.072	SLV 1	0	0	0	0	No
132	PF	3.284	SLV 1	0.362	1.483	1618	1.653	Si
	V	0.702	SLV 1	0.168	0.689	180	0.672	No
	PFFP	1000	SLV 1	0.362	1.483	1618	1.653	Si
	R	0.07	SLV 1	0	0	0	0	No
133	PF	1.275	SLV 3	0.306	1.254	935	1.32	Si
	V	0.352	SLV 13	0.082	0.337	33	0.335	No
	PFFP	1.545	SLV 3	0.362	1.483	1618	1.653	Si
	R	0.073	SLV 15	0	0	0	0	No
134	PF	3.173	SLV 3	0.362	1.483	1618	1.653	Si
	V	0.83	SLV 15	0.201	0.823	283	0.809	No
	PFFP	1000	SLV 1	0.362	1.483	1618	1.653	Si
	R	0.019	SLV 1	0	0	0	0	No
135	PF	0.364	SLV 1	0.086	0.351	36	0.347	No
	V	0.347	SLV 1	0.081	0.332	31	0.327	No
	PFFP	0.633	SLV 1	0.151	0.617	139	0.604	No
	R	0.02	SLV 1	0	0	0	0	No
136	PF	1.501	SLV 7	0.357	1.463	1545	1.622	Si
	V	0.947	SLV 11	0.231	0.945	408	0.94	No
	PFFP	1.982	SLV 7	0.362	1.483	1618	1.653	Si
	R	0.279	SLV 9	0.066	0.269	19	0.267	No
137	PF	1.645	SLV 7	0.362	1.483	1618	1.653	Si
	V	0.984	SLV 11	0.24	0.984	454	0.982	No
	PFFP	2.111	SLV 7	0.362	1.483	1618	1.653	Si
	R	0.289	SLV 13	0.067	0.275	20	0.273	No

Maschio	Stato limite	Molt.	Comb.	PGA	iPGA (ζE)	TR	(TR/TRrif)^.41	Verifica
138	PF	1000	SLV 1	0.362	1.483	1618	1.653	Si
	V	0.93	SLV 7	0.227	0.927	388	0.92	No
	PFFP	1000	SLV 1	0.362	1.483	1618	1.653	Si
	R	0.151	SLV 1	0.035	0.143	4	0.141	No
140	PF	0.431	SLV 9	0.101	0.414	53	0.407	No
	V	0.222	SLV 9	0.051	0.21	10	0.205	No
	PFFP	1.628	SLV 11	0.362	1.483	1618	1.653	Si
	R	0.035	SLV 15	0	0	0	0	No
141	PF	0	SLV 1	0	0	0	0	No
	V	0	SLV 1	0	0	0	0	No
	PFFP	0.082	SLV 7	0	0	0	0	No
	R	0.02	SLV 1	0	0	0	0	No
142	PF	2.921	SLV 5	0.362	1.483	1618	1.653	Si
	V	0.718	SLV 5	0.173	0.706	190	0.687	No
	PFFP	2.473	SLV 5	0.362	1.483	1618	1.653	Si
	R	0.02	SLV 1	0	0	0	0	No
143	PF	0.899	SLV 7	0.219	0.895	353	0.885	No
	V	0.734	SLV 3	0.177	0.725	202	0.704	No
	PFFP	1.415	SLV 11	0.338	1.384	1287	1.505	Si
	R	0.087	SLV 1	0.02	0.08	1	0.08	No
144	PF	0.285	SLV 5	0.067	0.275	20	0.273	No
	V	0.284	SLV 5	0.067	0.275	20	0.273	No
	PFFP	0.507	SLV 5	0.119	0.487	80	0.482	No
	R	0.083	SLV 15	0.02	0.08	1	0.08	No
145	PF	0.684	SLV 3	0.163	0.669	168	0.653	No
	V	0.331	SLV 3	0.078	0.318	28	0.313	No
	PFFP	1.887	SLV 11	0.362	1.483	1618	1.653	Si
	R	0.073	SLV 3	0	0	0	0	No
146	PF	0.152	SLV 5	0.035	0.143	4	0.141	No
	V	0.156	SLV 5	0.035	0.143	4	0.141	No
	PFFP	2.957	SLV 11	0.362	1.483	1618	1.653	Si
	R	0.072	SLV 15	0	0	0	0	No
147	PF	0.147	SLV 11	0.035	0.143	4	0.141	No
	V	0.147	SLV 11	0.035	0.143	4	0.141	No
	PFFP	0.97	SLV 5	0.237	0.968	435	0.965	No
	R	0.079	SLV 13	0	0	0	0	No
148	PF	3.662	SLV 3	0.362	1.483	1618	1.653	Si
	V	0.738	SLV 7	0.178	0.728	205	0.709	No
	PFFP	2.406	SLV 3	0.362	1.483	1618	1.653	Si
	R	0.02	SLV 1	0	0	0	0	No
149	PF	0.595	SLV 1	0.141	0.578	120	0.569	No
	V	0.4	SLV 1	0.094	0.384	44	0.377	No
	PFFP	0.958	SLV 3	0.234	0.956	422	0.953	No
	R	0.073	SLV 3	0	0	0	0	No
150	PF	3.013	SLV 1	0.362	1.483	1618	1.653	Si
	V	0.67	SLV 11	0.16	0.654	159	0.638	No
	PFFP	2.077	SLV 1	0.362	1.483	1618	1.653	Si
	R	0.02	SLV 1	0	0	0	0	No
151	PF	0.042	SLV 13	0	0	0	0	No
	V	0.045	SLV 9	0	0	0	0	No
	PFFP	0.777	SLV 9	0.188	0.77	237	0.752	No
	R	0.065	SLV 13	0	0	0	0	No
152	PF	0.059	SLV 13	0	0	0	0	No
	V	0.086	SLV 13	0.02	0.08	1	0.08	No
	PFFP	0.708	SLV 3	0.17	0.696	184	0.678	No
	R	0.058	SLV 5	0	0	0	0	No
153	PF	0.508	SLV 1	0.12	0.49	81	0.484	No
	V	0.424	SLV 1	0.1	0.41	52	0.404	No
	PFFP	1.756	SLV 7	0.362	1.483	1618	1.653	Si
	R	0.073	SLV 13	0	0	0	0	No
154	PF	1.238	SLV 15	0.298	1.22	861	1.276	Si
	V	0.643	SLV 3	0.153	0.627	144	0.613	No
	PFFP	1.569	SLV 7	0.362	1.483	1618	1.653	Si
	R	0.078	SLV 1	0	0	0	0	No
155	PF	1.116	SLV 11	0.271	1.108	645	1.134	Si
	V	0.527	SLV 15	0.124	0.508	88	0.501	No
	PFFP	1.41	SLV 7	0.337	1.379	1273	1.498	Si
	R	0.074	SLV 13	0	0	0	0	No
156	PF	1.061	SLV 1	0.258	1.057	560	1.07	Si
	V	0.636	SLV 1	0.151	0.619	140	0.606	No
	PFFP	1.599	SLV 5	0.362	1.483	1618	1.653	Si
	R	0.073	SLV 15	0	0	0	0	No
157	PF	0.88	SLV 1	0.214	0.876	334	0.866	No
	V	0.786	SLV 1	0.19	0.779	245	0.762	No
	PFFP	1.149	SLV 5	0.278	1.138	699	1.172	Si
	R	0.074	SLV 15	0	0	0	0	No
158	PF	1.733	SLV 7	0.362	1.483	1618	1.653	Si
	V	1.298	SLV 11	0.312	1.276	985	1.349	Si
	PFFP	1.749	SLV 3	0.362	1.483	1618	1.653	Si
	R	0.073	SLV 1	0	0	0	0	No
159	PF	1.433	SLV 1	0.342	1.4	1339	1.529	Si
	V	1.097	SLV 5	0.266	1.09	615	1.112	Si
	PFFP	1.571	SLV 1	0.362	1.483	1618	1.653	Si
	R	0.074	SLV 1	0	0	0	0	No
160	PF	2.762	SLV 13	0.362	1.483	1618	1.653	Si
	V	1.672	SLV 9	0.362	1.483	1618	1.653	Si
	PFFP	2.491	SLV 13	0.362	1.483	1618	1.653	Si
	R	0.072	SLV 1	0	0	0	0	No
161	PF	0.978	SLV 13	0.239	0.977	446	0.975	No
	V	0.874	SLV 13	0.212	0.869	327	0.858	No
	PFFP	1.315	SLV 9	0.316	1.292	1025	1.371	Si

Maschio	Stato limite	Molt.	Comb.	PGA	iPGA (ζE)	TR	(TR/TRrif)^.41	Verifica
	R	0.072	SLV 1	0	0	0	0	No
162	PF	1.188	SLV 13	0.287	1.174	768	1.218	Si
	V	0.791	SLV 13	0.192	0.784	249	0.767	No
	PFFP	1.245	SLV 9	0.3	1.227	875	1.285	Si
	R	0.074	SLV 1	0	0	0	0	No
163	PF	1.547	SLV 15	0.362	1.483	1618	1.653	Si
	V	1.22	SLV 3	0.294	1.204	826	1.255	Si
	PFFP	1.658	SLV 11	0.362	1.483	1618	1.653	Si
	R	0.073	SLV 1	0	0	0	0	No
164	PF	1.304	SLV 3	0.313	1.281	999	1.356	Si
	V	0.851	SLV 3	0.207	0.845	304	0.833	No
	PFFP	1.664	SLV 11	0.362	1.483	1618	1.653	Si
	R	0.078	SLV 13	0	0	0	0	No
165	PF	0.276	SLV 13	0.064	0.262	18	0.261	No
	V	0.254	SLV 13	0.059	0.242	14	0.236	No
	PFFP	1.06	SLV 15	0.258	1.056	559	1.069	Si
	R	0.083	SLV 1	0.02	0.08	1	0.08	No
166	PF	0.984	SLV 9	0.24	0.984	454	0.982	No
	V	0.823	SLV 5	0.199	0.816	277	0.802	No
	PFFP	1.566	SLV 9	0.362	1.483	1618	1.653	Si
	R	0.075	SLV 3	0	0	0	0	No
167	PF	2.121	SLV 13	0.362	1.483	1618	1.653	Si
	V	0.695	SLV 9	0.167	0.682	175	0.664	No
	PFFP	1.254	SLV 13	0.302	1.235	892	1.295	Si
	R	0.02	SLV 3	0	0	0	0	No
168	PF	0.366	SLV 13	0.086	0.351	36	0.347	No
	V	0.223	SLV 13	0.051	0.21	10	0.205	No
	PFFP	0.889	SLV 15	0.216	0.885	343	0.875	No
	R	0.071	SLV 15	0	0	0	0	No
169	PF	2.221	SLV 13	0.362	1.483	1618	1.653	Si
	V	0.756	SLV 11	0.183	0.748	220	0.729	No
	PFFP	1.1	SLV 15	0.267	1.093	619	1.115	Si
	R	0.021	SLV 1	0	0	0	0	No
170	PF	0.027	SLV 11	0	0	0	0	No
	V	0.015	SLV 11	0	0	0	0	No
	PFFP	0.709	SLV 7	0.17	0.698	185	0.679	No
	R	0.074	SLV 1	0	0	0	0	No
171	PF	0.78	SLV 15	0.189	0.773	239	0.755	No
	V	0.387	SLV 13	0.091	0.372	41	0.366	No
	PFFP	1.482	SLV 7	0.353	1.445	1485	1.596	Si
	R	0.076	SLV 1	0	0	0	0	No
172	PF	0.143	SLV 5	0.031	0.127	3	0.125	No
	V	0.173	SLV 11	0.038	0.157	5	0.155	No
	PFFP	0.476	SLV 9	0.112	0.457	68	0.451	No
	R	0.077	SLV 3	0	0	0	0	No
173	PF	1.486	SLV 11	0.354	1.449	1498	1.601	Si
	V	1.221	SLV 11	0.294	1.204	828	1.256	Si
	PFFP	1.338	SLV 3	0.321	1.313	1082	1.401	Si
	R	0.087	SLV 15	0.02	0.08	1	0.08	No
174	PF	0	SLV 1	0	0	0	0	No
	V	0	SLV 1	0	0	0	0	No
	PFFP	0.042	SLV 11	0	0	0	0	No
	R	0.018	SLV 1	0	0	0	0	No
175	PF	1.516	SLV 5	0.361	1.477	1596	1.644	Si
	V	0.822	SLV 9	0.199	0.815	276	0.8	No
	PFFP	1.319	SLV 5	0.316	1.295	1035	1.376	Si
	R	0.021	SLV 1	0	0	0	0	No
176	PF	2.195	SLV 7	0.362	1.483	1618	1.653	Si
	V	1.138	SLV 13	0.276	1.128	681	1.159	Si
	PFFP	3.485	SLV 11	0.362	1.483	1618	1.653	Si
	R	0.255	SLV 5	0.059	0.242	14	0.236	No
177	PF	2.84	SLV 7	0.362	1.483	1618	1.653	Si
	V	1.404	SLV 13	0.336	1.374	1256	1.49	Si
	PFFP	3.425	SLV 11	0.362	1.483	1618	1.653	Si
	R	0.271	SLV 1	0.062	0.256	17	0.255	No
179	PF	1.797	SLV 11	0.362	1.483	1618	1.653	Si
	V	0.981	SLV 11	0.239	0.979	449	0.977	No
	PFFP	1.952	SLV 11	0.362	1.483	1618	1.653	Si
	R	0.138	SLV 1	0.031	0.127	3	0.125	No
180	PF	0.341	SLV 5	0.08	0.328	31	0.327	No
	V	0.12	SLV 5	0.026	0.107	2	0.106	No
	PFFP	0.755	SLV 11	0.183	0.747	219	0.728	No
	R	0.025	SLV 3	0	0	0	0	No
181	PF	1.001	SLV 15	0.245	1.001	476	1.001	Si
	V	0.728	SLV 1	0.175	0.716	197	0.697	No
	PFFP	2.353	SLV 13	0.362	1.483	1618	1.653	Si
	R	0.073	SLV 1	0	0	0	0	No
182	PF	1.627	SLV 13	0.362	1.483	1618	1.653	Si
	V	0.814	SLV 13	0.197	0.808	269	0.792	No
	PFFP	2.297	SLV 9	0.362	1.483	1618	1.653	Si
	R	0.075	SLV 1	0	0	0	0	No
183	PF	1.697	SLV 1	0.362	1.483	1618	1.653	Si
	V	0.909	SLV 1	0.221	0.905	364	0.897	No
	PFFP	2.3	SLV 5	0.362	1.483	1618	1.653	Si
	R	0.075	SLV 1	0	0	0	0	No
184	PF	0.955	SLV 3	0.233	0.953	418	0.949	No
	V	0.742	SLV 13	0.179	0.733	208	0.713	No
	PFFP	1.835	SLV 7	0.362	1.483	1618	1.653	Si
	R	0.073	SLV 3	0	0	0	0	No
185	PF	1.642	SLV 15	0.362	1.483	1618	1.653	Si
	V	0.344	SLV 1	0.081	0.332	31	0.327	No

Maschio	Stato limite	Molt.	Comb.	PGA	iPGA (ζE)	TR	(TR/TRrif)^.41	Verifica
	PFFP	1.739	SLV 15	0.362	1.483	1618	1.653	Si
	R	0.069	SLV 1	0	0	0	0	No
186	PF	2.283	SLV 13	0.362	1.483	1618	1.653	Si
	V	0.777	SLV 15	0.188	0.77	237	0.752	No
	PFFP	3.086	SLV 13	0.362	1.483	1618	1.653	Si
	R	0.069	SLV 1	0	0	0	0	No
187	PF	2.409	SLV 1	0.362	1.483	1618	1.653	Si
	V	0.814	SLV 15	0.197	0.808	269	0.792	No
	PFFP	3.38	SLV 1	0.362	1.483	1618	1.653	Si
	R	0.068	SLV 1	0	0	0	0	No
188	PF	1.504	SLV 3	0.358	1.465	1554	1.626	Si
	V	0.592	SLV 13	0.14	0.574	118	0.565	No
	PFFP	1.536	SLV 1	0.362	1.483	1618	1.653	Si
	R	0.072	SLV 3	0	0	0	0	No
189	PF	2.497	SLV 13	0.362	1.483	1618	1.653	Si
	V	0.954	SLV 1	0.233	0.952	416	0.947	No
	PFFP	2.007	SLV 13	0.362	1.483	1618	1.653	Si
	R	0.019	SLV 1	0	0	0	0	No
190	PF	0.29	SLV 3	0.069	0.281	21	0.278	No
	V	0.282	SLV 3	0.066	0.269	19	0.267	No
	PFFP	0.472	SLV 3	0.111	0.454	67	0.448	No
	R	0.02	SLV 1	0	0	0	0	No
191	PF	1.869	SLV 11	0.362	1.483	1618	1.653	Si
	V	1.055	SLV 11	0.257	1.051	551	1.063	Si
	PFFP	3.176	SLV 7	0.362	1.483	1618	1.653	Si
	R	0.25	SLV 9	0.059	0.242	14	0.236	No
192	PF	2.494	SLV 11	0.362	1.483	1618	1.653	Si
	V	1.222	SLV 11	0.294	1.205	830	1.257	Si
	PFFP	3.327	SLV 7	0.362	1.483	1618	1.653	Si
	R	0.273	SLV 13	0.064	0.262	18	0.261	No
193	PF	2.865	SLV 7	0.362	1.483	1618	1.653	Si
	V	1.008	SLV 7	0.246	1.007	485	1.009	Si
	PFFP	3.989	SLV 7	0.362	1.483	1618	1.653	Si
	R	0.145	SLV 1	0.031	0.127	3	0.125	No
195	PF	0.31	SLV 9	0.073	0.298	24	0.294	No
	V	0.079	SLV 9	0	0	0	0	No
	PFFP	0.936	SLV 7	0.228	0.933	395	0.927	No
	R	0.017	SLV 13	0	0	0	0	No
196	PF	0	SLV 1	0	0	0	0	No
	V	0	SLV 1	0	0	0	0	No
	PFFP	0.068	SLV 7	0	0	0	0	No
	R	0.018	SLV 1	0	0	0	0	No
197	PF	1.9	SLV 9	0.362	1.483	1618	1.653	Si
	V	0.836	SLV 5	0.203	0.829	289	0.816	No
	PFFP	1.549	SLV 9	0.362	1.483	1618	1.653	Si
	R	0.02	SLV 1	0	0	0	0	No
198	PF	1.221	SLV 7	0.294	1.204	828	1.256	Si
	V	1.042	SLV 7	0.254	1.039	532	1.048	Si
	PFFP	1.245	SLV 15	0.3	1.227	875	1.285	Si
	R	0.088	SLV 3	0.02	0.08	1	0.08	No
199	PF	0.168	SLV 9	0.038	0.157	5	0.155	No
	V	0.168	SLV 9	0.038	0.157	5	0.155	No
	PFFP	0.367	SLV 5	0.086	0.351	36	0.347	No
	R	0.089	SLV 3	0.02	0.08	1	0.08	No
200	PF	0.743	SLV 3	0.18	0.735	210	0.716	No
	V	0.416	SLV 3	0.098	0.403	50	0.397	No
	PFFP	1.461	SLV 11	0.348	1.426	1421	1.567	Si
	R	0.074	SLV 13	0	0	0	0	No
201	PF	0.103	SLV 11	0.02	0.08	1	0.08	No
	V	0.088	SLV 7	0.02	0.08	1	0.08	No
	PFFP	1.827	SLV 11	0.362	1.483	1618	1.653	Si
	R	0.077	SLV 13	0	0	0	0	No
202	PF	0	SLV 1	0	0	0	0	No
	V	0	SLV 1	0	0	0	0	No
	PFFP	0.703	SLV 5	0.169	0.691	181	0.673	No
	R	0.031	SLV 7	0	0	0	0	No
203	PF	2.677	SLV 1	0.362	1.483	1618	1.653	Si
	V	0.806	SLV 7	0.195	0.799	262	0.784	No
	PFFP	1.39	SLV 3	0.332	1.361	1218	1.471	Si
	R	0.02	SLV 1	0	0	0	0	No
204	PF	0.402	SLV 1	0.095	0.388	45	0.381	No
	V	0.282	SLV 1	0.066	0.269	19	0.267	No
	PFFP	0.846	SLV 3	0.205	0.841	300	0.828	No
	R	0.072	SLV 3	0	0	0	0	No
205	PF	2.47	SLV 1	0.362	1.483	1618	1.653	Si
	V	0.725	SLV 11	0.175	0.715	196	0.696	No
	PFFP	1.437	SLV 1	0.343	1.404	1350	1.535	Si
	R	0.02	SLV 1	0	0	0	0	No
206	PF	0.076	SLV 13	0	0	0	0	No
	V	0.073	SLV 13	0	0	0	0	No
	PFFP	0.725	SLV 9	0.175	0.715	196	0.696	No
	R	0.074	SLV 1	0	0	0	0	No
207	PF	0.1	SLV 13	0.02	0.08	1	0.08	No
	V	0.125	SLV 13	0.026	0.107	2	0.106	No
	PFFP	0.704	SLV 3	0.169	0.692	182	0.675	No
	R	0.084	SLV 1	0.02	0.08	1	0.08	No
208	PF	0.336	SLV 1	0.079	0.323	30	0.322	No
	V	0.308	SLV 1	0.073	0.298	24	0.294	No
	PFFP	1.165	SLV 3	0.282	1.153	726	1.19	Si
	R	0.081	SLV 15	0	0	0	0	No
209	PF	1.291	SLV 15	0.31	1.269	969	1.34	Si

Maschio	Stato limite	Molt.	Comb.	PGA	iPGA (ζE)	TR	(TR/TRrif)^.41	Verifica
	V	0.852	SLV 15	0.207	0.846	305	0.834	No
	PFFP	1.604	SLV 7	0.362	1.483	1618	1.653	Si
	R	0.079	SLV 1	0	0	0	0	No
210	PF	1.498	SLV 3	0.357	1.46	1535	1.618	Si
	V	0.949	SLV 15	0.231	0.947	411	0.942	No
	PFFP	1.498	SLV 7	0.357	1.46	1535	1.618	Si
	R	0.073	SLV 13	0	0	0	0	No
211	PF	1.087	SLV 1	0.264	1.081	599	1.1	Si
	V	0.779	SLV 1	0.188	0.771	238	0.753	No
	PFFP	1.337	SLV 5	0.321	1.312	1080	1.4	Si
	R	0.071	SLV 15	0	0	0	0	No
212	PF	0.99	SLV 1	0.242	0.99	462	0.989	No
	V	0.915	SLV 1	0.223	0.912	371	0.904	No
	PFFP	1.297	SLV 5	0.311	1.275	982	1.347	Si
	R	0.073	SLV 13	0	0	0	0	No
213	PF	2.371	SLV 1	0.362	1.483	1618	1.653	Si
	V	1.542	SLV 5	0.362	1.483	1618	1.653	Si
	PFFP	1.937	SLV 1	0.362	1.483	1618	1.653	Si
	R	0.077	SLV 1	0	0	0	0	No
214	PF	1000	SLV 1	0.362	1.483	1618	1.653	Si
	V	2.021	SLV 9	0.362	1.483	1618	1.653	Si
	PFFP	2.154	SLV 13	0.362	1.483	1618	1.653	Si
	R	0.101	SLV 1	0.02	0.08	1	0.08	No
215	PF	0.952	SLV 5	0.232	0.95	415	0.946	No
	V	0.911	SLV 5	0.222	0.907	367	0.9	No
	PFFP	1.18	SLV 9	0.285	1.167	753	1.208	Si
	R	0.123	SLV 1	0.026	0.107	2	0.106	No
216	PF	0.876	SLV 9	0.213	0.871	329	0.86	No
	V	0.702	SLV 9	0.168	0.689	180	0.672	No
	PFFP	0.663	SLV 9	0.158	0.648	156	0.633	No
	R	0.124	SLV 3	0.026	0.107	2	0.106	No
217	PF	1.322	SLV 7	0.317	1.298	1042	1.38	Si
	V	1.137	SLV 7	0.275	1.127	679	1.158	Si
	PFFP	1.063	SLV 11	0.259	1.059	563	1.072	Si
	R	0.133	SLV 1	0.031	0.127	3	0.125	No
218	PF	1.489	SLV 3	0.355	1.452	1507	1.605	Si
	V	1.4	SLV 3	0.335	1.37	1245	1.484	Si
	PFFP	0.811	SLV 13	0.196	0.804	266	0.788	No
	R	0.133	SLV 3	0.031	0.127	3	0.125	No
219	PF	0.091	SLV 13	0.02	0.08	1	0.08	No
	V	0.087	SLV 13	0.02	0.08	1	0.08	No
	PFFP	0.459	SLV 7	0.108	0.442	63	0.437	No
	R	0.123	SLV 3	0.026	0.107	2	0.106	No
220	PF	0	SLV 1	0	0	0	0	No
	V	0	SLV 1	0	0	0	0	No
	PFFP	0.794	SLV 9	0.192	0.787	251	0.77	No
	R	0	SLV 1	0	0	0	0	No
221	PF	0.142	SLV 5	0.031	0.127	3	0.125	No
	V	0.116	SLV 9	0.026	0.107	2	0.106	No
	PFFP	0.76	SLV 9	0.184	0.751	222	0.732	No
	R	0.027	SLV 1	0	0	0	0	No
222	PF	0	SLV 1	0	0	0	0	No
	V	0	SLV 1	0	0	0	0	No
	PFFP	0.222	SLV 15	0.051	0.21	10	0.205	No
	R	0.135	SLV 3	0.031	0.127	3	0.125	No
223	PF	0.12	SLV 9	0.026	0.107	2	0.106	No
	V	0.115	SLV 9	0.026	0.107	2	0.106	No
	PFFP	0.701	SLV 9	0.168	0.689	180	0.672	No
	R	0.032	SLV 1	0	0	0	0	No
224	PF	0.202	SLV 13	0.047	0.191	8	0.187	No
	V	0.046	SLV 13	0	0	0	0	No
	PFFP	0.974	SLV 3	0.238	0.972	441	0.97	No
	R	0.129	SLV 15	0.026	0.107	2	0.106	No
225	PF	0	SLV 1	0	0	0	0	No
	V	0	SLV 1	0	0	0	0	No
	PFFP	0.055	SLV 11	0	0	0	0	No
	R	0.026	SLV 13	0	0	0	0	No
226	PF	1.062	SLV 5	0.258	1.058	561	1.071	Si
	V	0.834	SLV 7	0.202	0.827	287	0.813	No
	PFFP	0.691	SLV 1	0.165	0.676	172	0.659	No
	R	0.033	SLV 1	0	0	0	0	No
227	PF	0.757	SLV 11	0.183	0.748	220	0.729	No
	V	0.709	SLV 11	0.17	0.698	185	0.679	No
	PFFP	0.917	SLV 11	0.223	0.914	374	0.907	No
	R	0.133	SLV 13	0.031	0.127	3	0.125	No
228	PF	0.814	SLV 3	0.197	0.808	269	0.792	No
	V	0.658	SLV 3	0.156	0.64	152	0.627	No
	PFFP	0.817	SLV 11	0.198	0.81	272	0.796	No
	R	0.126	SLV 3	0.026	0.107	2	0.106	No
229	PF	1.478	SLV 13	0.352	1.441	1473	1.59	Si
	V	1.029	SLV 13	0.251	1.027	514	1.033	Si
	PFFP	1.441	SLV 9	0.344	1.408	1361	1.54	Si
	R	0.119	SLV 3	0.026	0.107	2	0.106	No
230	PF	1.658	SLV 1	0.362	1.483	1618	1.653	Si
	V	1.123	SLV 1	0.272	1.114	656	1.142	Si
	PFFP	1.373	SLV 5	0.329	1.345	1173	1.449	Si
	R	0.119	SLV 15	0.026	0.107	2	0.106	No
231	PF	0.494	SLV 13	0.116	0.477	75	0.469	No
	V	0.318	SLV 15	0.074	0.303	25	0.299	No
	PFFP	0.805	SLV 11	0.195	0.798	261	0.782	No
	R	0.123	SLV 3	0.026	0.107	2	0.106	No

Maschio	Stato limite	Molt.	Comb.	PGA	iPGA (ζE)	TR	(TR/TRrif)^.41	Verifica
232	PF	1.618	SLV 15	0.362	1.483	1618	1.653	Si
	V	0.798	SLV 1	0.193	0.791	254	0.774	No
	PFFP	1.54	SLV 15	0.362	1.483	1618	1.653	Si
	R	0.095	SLV 3	0.02	0.08	1	0.08	No
233	PF	1.069	SLV 15	0.26	1.064	572	1.079	Si
	V	0.867	SLV 15	0.21	0.861	319	0.849	No
	PFFP	1.537	SLV 15	0.362	1.483	1618	1.653	Si
	R	0.093	SLV 1	0.02	0.08	1	0.08	No
234	PF	1.329	SLV 3	0.319	1.304	1060	1.39	Si
	V	1.075	SLV 1	0.261	1.07	581	1.086	Si
	PFFP	1.928	SLV 3	0.362	1.483	1618	1.653	Si
	R	0.091	SLV 13	0.02	0.08	1	0.08	No
235	PF	1.481	SLV 3	0.353	1.444	1482	1.594	Si
	V	0.985	SLV 13	0.24	0.984	455	0.983	No
	PFFP	1.117	SLV 3	0.271	1.109	646	1.134	Si
	R	0.128	SLV 13	0.026	0.107	2	0.106	No
236	PF	1.401	SLV 13	0.335	1.371	1248	1.486	Si
	V	1.202	SLV 13	0.29	1.187	793	1.234	Si
	PFFP	0.734	SLV 13	0.177	0.725	202	0.704	No
	R	0.029	SLV 1	0	0	0	0	No
237	PF	0.024	SLV 3	0	0	0	0	No
	V	0.023	SLV 3	0	0	0	0	No
	PFFP	0.124	SLV 3	0.026	0.107	2	0.106	No
	R	0.03	SLV 1	0	0	0	0	No
238	PF	0.929	SLV 7	0.226	0.926	387	0.919	No
	V	0.857	SLV 7	0.208	0.852	310	0.839	No
	PFFP	0.993	SLV 7	0.243	0.993	465	0.991	No
	R	0.135	SLV 1	0.031	0.127	3	0.125	No
239	PF	0	SLV 1	0	0	0	0	No
	V	0	SLV 1	0	0	0	0	No
	PFFP	0.028	SLV 7	0	0	0	0	No
	R	0.026	SLV 3	0	0	0	0	No
240	PF	1.279	SLV 9	0.307	1.258	944	1.325	Si
	V	0.922	SLV 7	0.225	0.919	379	0.912	No
	PFFP	0.776	SLV 9	0.188	0.769	236	0.751	No
	R	0.033	SLV 1	0	0	0	0	No
241	PF	0.31	SLV 1	0.073	0.298	24	0.294	No
	V	0.155	SLV 1	0.035	0.143	4	0.141	No
	PFFP	0.904	SLV 15	0.22	0.9	359	0.892	No
	R	0.131	SLV 3	0.031	0.127	3	0.125	No
242	PF	0.095	SLV 9	0.02	0.08	1	0.08	No
	V	0.088	SLV 9	0.02	0.08	1	0.08	No
	PFFP	0.802	SLV 5	0.194	0.794	258	0.779	No
	R	0.032	SLV 1	0	0	0	0	No
243	PF	0.071	SLV 1	0	0	0	0	No
	V	0.034	SLV 1	0	0	0	0	No
	PFFP	0.3	SLV 1	0.07	0.286	22	0.284	No
	R	0.134	SLV 3	0.031	0.127	3	0.125	No
244	PF	0.517	SLV 9	0.122	0.498	84	0.491	No
	V	0.33	SLV 5	0.078	0.318	28	0.313	No
	PFFP	0.867	SLV 3	0.21	0.861	319	0.849	No
	R	0.026	SLV 1	0	0	0	0	No
245	PF	0.113	SLV 5	0.026	0.107	2	0.106	No
	V	0.102	SLV 5	0.02	0.08	1	0.08	No
	PFFP	0.678	SLV 9	0.162	0.663	165	0.648	No
	R	0.075	SLV 15	0	0	0	0	No
246	PF	0	SLV 1	0	0	0	0	No
	V	0	SLV 1	0	0	0	0	No
	PFFP	0.403	SLV 3	0.095	0.388	45	0.381	No
	R	0.107	SLV 15	0.02	0.08	1	0.08	No
247	PF	0.202	SLV 1	0.047	0.191	8	0.187	No
	V	0.196	SLV 1	0.044	0.181	7	0.177	No
	PFFP	0.458	SLV 11	0.108	0.442	63	0.437	No
	R	0.121	SLV 3	0.026	0.107	2	0.106	No
248	PF	1.34	SLV 15	0.321	1.315	1087	1.404	Si
	V	1.264	SLV 15	0.304	1.244	913	1.307	Si
	PFFP	0.926	SLV 7	0.226	0.923	384	0.916	No
	R	0.131	SLV 13	0.031	0.127	3	0.125	No
249	PF	1.256	SLV 11	0.302	1.237	896	1.297	Si
	V	1.077	SLV 11	0.262	1.072	584	1.088	Si
	PFFP	1.106	SLV 7	0.268	1.098	628	1.121	Si
	R	0.098	SLV 1	0.02	0.08	1	0.08	No
250	PF	0.84	SLV 15	0.204	0.834	293	0.82	No
	V	0.62	SLV 15	0.147	0.602	132	0.592	No
	PFFP	0.701	SLV 5	0.168	0.689	180	0.672	No
	R	0.128	SLV 1	0.026	0.107	2	0.106	No
251	PF	1.449	SLV 1	0.346	1.415	1385	1.551	Si
	V	1.194	SLV 15	0.288	1.18	778	1.224	Si
	PFFP	0.882	SLV 5	0.214	0.878	336	0.868	No
	R	0.112	SLV 13	0.026	0.107	2	0.106	No
252	PF	2.224	SLV 7	0.362	1.483	1618	1.653	Si
	V	1.624	SLV 11	0.362	1.483	1618	1.653	Si
	PFFP	1.245	SLV 1	0.3	1.227	875	1.285	Si
	R	0.127	SLV 1	0.026	0.107	2	0.106	No
253	PF	0.016	SLV 7	0	0	0	0	No
	V	0.016	SLV 7	0	0	0	0	No
	PFFP	0.099	SLV 9	0.02	0.08	1	0.08	No
	R	0.061	SLV 9	0	0	0	0	No
254	PF	0.091	SLV 11	0.02	0.08	1	0.08	No
	V	0.091	SLV 11	0.02	0.08	1	0.08	No
	PFFP	0.453	SLV 11	0.107	0.436	61	0.431	No

Maschio	Stato limite	Molt.	Comb.	PGA	iPGA (ζE)	TR	(TR/TRrif)^.41	Verifica
	R	0.145	SLV 11	0.031	0.127	3	0.125	No
255	PF	0.842	SLV 5	0.204	0.836	295	0.823	No
	V	0.823	SLV 5	0.199	0.816	277	0.802	No
	PFFP	0.842	SLV 1	0.204	0.836	295	0.823	No
	R	0.207	SLV 13	0.049	0.201	9	0.197	No
256	PF	1.293	SLV 7	0.311	1.271	973	1.342	Si
	V	0.685	SLV 13	0.164	0.671	169	0.655	No
	PFFP	1.338	SLV 7	0.321	1.313	1082	1.401	Si
	R	0.15	SLV 1	0.035	0.143	4	0.141	No
257	PF	0.916	SLV 11	0.223	0.913	373	0.906	No
	V	0.79	SLV 11	0.191	0.783	248	0.766	No
	PFFP	1.257	SLV 11	0.302	1.238	899	1.299	Si
	R	0.153	SLV 3	0.035	0.143	4	0.141	No
258	PF	0.766	SLV 9	0.185	0.758	228	0.74	No
	V	0.743	SLV 9	0.18	0.735	210	0.716	No
	PFFP	0.76	SLV 13	0.184	0.751	222	0.732	No
	R	0.209	SLV 1	0.049	0.201	9	0.197	No
259	PF	0.075	SLV 7	0	0	0	0	No
	V	0.074	SLV 7	0	0	0	0	No
	PFFP	0.321	SLV 7	0.075	0.308	26	0.304	No
	R	0.128	SLV 7	0.026	0.107	2	0.106	No
260	PF	0.008	SLV 7	0	0	0	0	No
	V	0.008	SLV 7	0	0	0	0	No
	PFFP	0.124	SLV 9	0.026	0.107	2	0.106	No
	R	0.037	SLV 5	0	0	0	0	No
261	PF	1000	SLV 1	0.362	1.483	1618	1.653	Si
	V	2.41	SLV 1	0.362	1.483	1618	1.653	Si
	PFFP	2.251	SLV 11	0.362	1.483	1618	1.653	Si
	R	0.167	SLV 11	0.038	0.157	5	0.155	No
262	PF	0.702	SLV 11	0.168	0.689	180	0.672	No
	V	0.649	SLV 11	0.155	0.633	148	0.62	No
	PFFP	1.367	SLV 11	0.327	1.34	1157	1.441	Si
	R	0.468	SLV 11	0.11	0.451	66	0.445	No
263	PF	0	SLV 1	0	0	0	0	No
	V	0	SLV 1	0	0	0	0	No
	PFFP	1.845	SLV 5	0.362	1.483	1618	1.653	Si
	R	0.11	SLV 13	0.026	0.107	2	0.106	No
264	PF	0.716	SLV 15	0.172	0.705	189	0.685	No
	V	0.288	SLV 1	0.067	0.275	20	0.273	No
	PFFP	1.047	SLV 7	0.255	1.044	540	1.054	Si
	R	0.188	SLV 1	0.044	0.181	7	0.177	No
265	PF	0.729	SLV 3	0.175	0.718	198	0.699	No
	V	0.301	SLV 13	0.07	0.286	22	0.284	No
	PFFP	1.062	SLV 11	0.258	1.058	561	1.071	Si
	R	0.188	SLV 13	0.044	0.181	7	0.177	No
266	PF	0.531	SLV 15	0.125	0.513	90	0.506	No
	V	0.419	SLV 15	0.098	0.403	50	0.397	No
	PFFP	1.333	SLV 11	0.32	1.308	1070	1.395	Si
	R	0.099	SLV 1	0.02	0.08	1	0.08	No
267	PF	0.585	SLV 3	0.139	0.567	115	0.559	No
	V	0.447	SLV 15	0.105	0.43	58	0.422	No
	PFFP	1.243	SLV 7	0.299	1.225	871	1.282	Si
	R	0.1	SLV 13	0.02	0.08	1	0.08	No
268	PF	0.523	SLV 15	0.124	0.506	87	0.499	No
	V	0.446	SLV 15	0.105	0.43	58	0.422	No
	PFFP	1.542	SLV 7	0.362	1.483	1618	1.653	Si
	R	0.089	SLV 1	0.02	0.08	1	0.08	No
269	PF	0.601	SLV 3	0.142	0.583	122	0.573	No
	V	0.482	SLV 15	0.113	0.463	70	0.456	No
	PFFP	1.452	SLV 11	0.346	1.418	1394	1.555	Si
	R	0.09	SLV 13	0.02	0.08	1	0.08	No
270	PF	1.102	SLV 7	0.267	1.095	622	1.117	Si
	V	1.096	SLV 11	0.266	1.09	613	1.11	Si
	PFFP	1.233	SLV 7	0.297	1.216	851	1.27	Si
	R	0.395	SLV 9	0.093	0.38	43	0.373	No
271	PF	0.172	SLV 9	0.038	0.157	5	0.155	No
	V	0.174	SLV 7	0.038	0.157	5	0.155	No
	PFFP	0.65	SLV 7	0.155	0.633	148	0.62	No
	R	0.312	SLV 7	0.073	0.298	24	0.294	No
274	PF	0.41	SLV 15	0.097	0.395	47	0.387	No
	V	0.393	SLV 15	0.093	0.38	43	0.373	No
	PFFP	0.988	SLV 11	0.241	0.988	459	0.986	No
	R	0.057	SLV 15	0	0	0	0	No
275	PF	0.502	SLV 3	0.118	0.485	79	0.479	No
	V	0.488	SLV 3	0.115	0.471	73	0.464	No
	PFFP	0.929	SLV 7	0.226	0.926	387	0.919	No
	R	0.056	SLV 13	0	0	0	0	No
276	PF	2.092	SLV 7	0.362	1.483	1618	1.653	Si
	V	1.818	SLV 7	0.362	1.483	1618	1.653	Si
	PFFP	2.364	SLV 7	0.362	1.483	1618	1.653	Si
	R	0.247	SLV 1	0.057	0.234	13	0.229	No
277	PF	1.642	SLV 9	0.362	1.483	1618	1.653	Si
	V	1.383	SLV 9	0.331	1.354	1199	1.462	Si
	PFFP	2.195	SLV 9	0.362	1.483	1618	1.653	Si
	R	0.236	SLV 13	0.055	0.226	12	0.221	No

Verifica travi di collegamento in muratura

Trave	Stato limite	Molt.	Comb.	PGA	iPGA (ζE)	TR	(TR/TRrif)^.41	Verifica
1	F	3.158	SLV 7	0.362	1.483	1618	1.653	Si
	V	0	SLV 1	0	0	0	0	No
2	F	0.44	SLV 7	0.104	0.424	56	0.416	No

Trave	Stato limite	Molt.	Comb.	PGA	iPGA (ζE)	TR	(TR/TRrif)^.41	Verifica
	V	0	SLV 1	0	0	0	0	No
3	F	1.031	SLV 1	0.251	1.029	517	1.035	Si
	V	0	SLV 1	0	0	0	0	No
4	F	0.813	SLV 7	0.197	0.807	268	0.791	No
	V	0	SLV 1	0	0	0	0	No
5	F	2.976	SLV 5	0.362	1.483	1618	1.653	Si
	V	0	SLV 1	0	0	0	0	No
6	F	1.257	SLV 1	0.302	1.238	899	1.299	Si
	V	0	SLV 1	0	0	0	0	No
7	F	2.422	SLV 13	0.362	1.483	1618	1.653	Si
	V	0	SLV 1	0	0	0	0	No
8	F	0.643	SLV 9	0.153	0.627	144	0.613	No
	V	0	SLV 1	0	0	0	0	No
9	F	1.146	SLV 3	0.277	1.136	694	1.168	Si
	V	0	SLV 1	0	0	0	0	No
10	F	0.584	SLV 3	0.139	0.567	115	0.559	No
	V	0	SLV 1	0	0	0	0	No
11	F	0.598	SLV 1	0.142	0.58	121	0.571	No
	V	0	SLV 1	0	0	0	0	No
12	F	1.99	SLV 9	0.362	1.483	1618	1.653	Si
	V	0	SLV 1	0	0	0	0	No
13	F	1.272	SLV 15	0.306	1.252	929	1.317	Si
	V	0	SLV 1	0	0	0	0	No
14	F	0.503	SLV 11	0.118	0.485	79	0.479	No
	V	0	SLV 1	0	0	0	0	No
15	F	2.148	SLV 3	0.362	1.483	1618	1.653	Si
	V	0	SLV 1	0	0	0	0	No
16	F	3.066	SLV 3	0.362	1.483	1618	1.653	Si
	V	0	SLV 1	0	0	0	0	No
17	F	0.206	SLV 7	0.047	0.191	8	0.187	No
	V	0	SLV 1	0	0	0	0	No
18	F	1000	SLV 1	0.362	1.483	1618	1.653	Si
	V	0	SLV 1	0	0	0	0	No
19	F	0.919	SLV 13	0.224	0.916	376	0.909	No
	V	0	SLV 1	0	0	0	0	No
20	F	3.456	SLV 13	0.362	1.483	1618	1.653	Si
	V	0	SLV 1	0	0	0	0	No
21	F	0.821	SLV 13	0.199	0.815	276	0.8	No
	V	0	SLV 1	0	0	0	0	No
22	F	0	SLV 1	0	0	0	0	No
	V	0	SLV 1	0	0	0	0	No
23	F	1.916	SLV 9	0.362	1.483	1618	1.653	Si
	V	0	SLV 1	0	0	0	0	No
24	F	1.637	SLV 1	0.362	1.483	1618	1.653	Si
	V	0	SLV 1	0	0	0	0	No
25	F	0.517	SLV 5	0.122	0.498	84	0.491	No
	V	0	SLV 1	0	0	0	0	No
26	F	2.809	SLV 9	0.362	1.483	1618	1.653	Si
	V	0	SLV 1	0	0	0	0	No
27	F	0.861	SLV 13	0.209	0.855	314	0.844	No
	V	0	SLV 1	0	0	0	0	No
28	F	3.186	SLV 13	0.362	1.483	1618	1.653	Si
	V	0	SLV 1	0	0	0	0	No
29	F	0.252	SLV 11	0.059	0.242	14	0.236	No
	V	0	SLV 1	0	0	0	0	No
30	F	0.23	SLV 7	0.053	0.218	11	0.214	No
	V	0	SLV 1	0	0	0	0	No
31	F	0.802	SLV 13	0.194	0.794	258	0.779	No
	V	0	SLV 1	0	0	0	0	No
32	F	0.643	SLV 3	0.153	0.627	144	0.613	No
	V	0	SLV 1	0	0	0	0	No
33	F	0.683	SLV 1	0.163	0.669	168	0.653	No
	V	0	SLV 1	0	0	0	0	No
34	F	1.231	SLV 9	0.297	1.214	847	1.268	Si
	V	0	SLV 1	0	0	0	0	No
35	F	0.997	SLV 13	0.243	0.997	470	0.996	No
	V	0	SLV 1	0	0	0	0	No
36	F	0.167	SLV 7	0.038	0.157	5	0.155	No
	V	0	SLV 1	0	0	0	0	No
37	F	1.139	SLV 3	0.276	1.129	682	1.16	Si
	V	0	SLV 1	0	0	0	0	No
38	F	0.352	SLV 9	0.082	0.337	33	0.335	No
	V	0.007	SLV 1	0	0	0	0	No
39	F	0.583	SLV 13	0.138	0.565	113	0.555	No
	V	0	SLV 1	0	0	0	0	No
40	F	0.645	SLV 1	0.154	0.629	145	0.615	No
	V	0	SLV 1	0	0	0	0	No
41	F	0	SLV 1	0	0	0	0	No
	V	0	SLV 1	0	0	0	0	No
42	F	0.31	SLV 5	0.073	0.298	24	0.294	No
	V	0	SLV 1	0	0	0	0	No
43	F	0.352	SLV 11	0.082	0.337	33	0.335	No
	V	0	SLV 1	0	0	0	0	No
44	F	0.845	SLV 15	0.205	0.84	299	0.827	No
	V	0	SLV 1	0	0	0	0	No
45	F	0.368	SLV 11	0.087	0.355	37	0.351	No
	V	0	SLV 1	0	0	0	0	No
46	F	0.603	SLV 15	0.143	0.585	123	0.575	No
	V	0	SLV 1	0	0	0	0	No
47	F	0.343	SLV 7	0.08	0.328	31	0.327	No
	V	0	SLV 1	0	0	0	0	No

Trave	Stato limite	Molt.	Comb.	PGA	iPGA (ζE)	TR	(TR/TRrif)^.41	Verifica
48	F	0.865	SLV 3	0.21	0.859	317	0.847	No
	V	0	SLV 1	0	0	0	0	No
49	F	0.622	SLV 1	0.148	0.604	133	0.593	No
	V	0	SLV 1	0	0	0	0	No
50	F	0.336	SLV 15	0.079	0.323	30	0.322	No
	V	0	SLV 1	0	0	0	0	No
51	F	0.462	SLV 3	0.109	0.445	64	0.44	No
	V	0	SLV 1	0	0	0	0	No
52	F	0.412	SLV 1	0.097	0.395	47	0.387	No
	V	0	SLV 1	0	0	0	0	No
53	F	0.037	SLV 5	0	0	0	0	No
	V	0	SLV 1	0	0	0	0	No
54	F	0	SLV 1	0	0	0	0	No
	V	0	SLV 1	0	0	0	0	No
55	F	0.468	SLV 3	0.11	0.451	66	0.445	No
	V	0	SLV 1	0	0	0	0	No
56	F	0.724	SLV 1	0.174	0.713	194	0.693	No
	V	0	SLV 1	0	0	0	0	No
57	F	0.162	SLV 5	0.038	0.157	5	0.155	No
	V	0	SLV 1	0	0	0	0	No
58	F	1.253	SLV 9	0.302	1.234	891	1.294	Si
	V	0	SLV 1	0	0	0	0	No
59	F	1.438	SLV 13	0.343	1.405	1353	1.536	Si
	V	0	SLV 1	0	0	0	0	No
60	F	0.06	SLV 11	0	0	0	0	No
	V	0	SLV 1	0	0	0	0	No
61	F	1.104	SLV 15	0.268	1.097	625	1.119	Si
	V	0	SLV 1	0	0	0	0	No
62	F	1.69	SLV 5	0.362	1.483	1618	1.653	Si
	V	0	SLV 1	0	0	0	0	No
63	F	1.055	SLV 1	0.257	1.051	551	1.063	Si
	V	0	SLV 1	0	0	0	0	No
64	F	0.404	SLV 15	0.095	0.388	45	0.381	No
	V	0	SLV 1	0	0	0	0	No
65	F	0.806	SLV 13	0.195	0.799	262	0.784	No
	V	0	SLV 1	0	0	0	0	No
66	F	0.466	SLV 15	0.11	0.448	65	0.442	No
	V	0	SLV 1	0	0	0	0	No
67	F	0.623	SLV 15	0.148	0.606	134	0.595	No
	V	0	SLV 1	0	0	0	0	No
68	F	0.86	SLV 3	0.209	0.855	313	0.843	No
	V	0	SLV 1	0	0	0	0	No
69	F	0.932	SLV 13	0.227	0.929	390	0.922	No
	V	0	SLV 1	0	0	0	0	No
70	F	1.209	SLV 3	0.292	1.193	806	1.242	Si
	V	0	SLV 1	0	0	0	0	No
71	F	0.818	SLV 3	0.198	0.811	273	0.797	No
	V	0	SLV 1	0	0	0	0	No
72	F	3.729	SLV 15	0.362	1.483	1618	1.653	Si
	V	0	SLV 1	0	0	0	0	No
73	F	1.493	SLV 15	0.356	1.455	1520	1.611	Si
	V	0	SLV 1	0	0	0	0	No
74	F	0.75	SLV 13	0.181	0.741	214	0.721	No
	V	0	SLV 1	0	0	0	0	No
75	F	1.276	SLV 13	0.307	1.255	938	1.322	Si
	V	0	SLV 1	0	0	0	0	No
76	F	0.644	SLV 9	0.153	0.627	144	0.613	No
	V	0.004	SLV 5	0	0	0	0	No
77	F	0.611	SLV 13	0.145	0.593	127	0.582	No
	V	0	SLV 1	0	0	0	0	No
78	F	0.394	SLV 15	0.093	0.38	43	0.373	No
	V	0	SLV 1	0	0	0	0	No
79	F	0.072	SLV 11	0	0	0	0	No
	V	0	SLV 1	0	0	0	0	No
80	F	0.329	SLV 5	0.078	0.318	28	0.313	No
	V	0	SLV 1	0	0	0	0	No
81	F	0.925	SLV 3	0.225	0.922	383	0.916	No
	V	0	SLV 1	0	0	0	0	No
82	F	0.864	SLV 15	0.21	0.858	316	0.846	No
	V	0	SLV 1	0	0	0	0	No
83	F	0.752	SLV 15	0.182	0.744	217	0.725	No
	V	0	SLV 1	0	0	0	0	No
84	F	0.696	SLV 13	0.167	0.682	175	0.664	No
	V	0	SLV 1	0	0	0	0	No
85	F	1.163	SLV 15	0.281	1.151	723	1.188	Si
	V	0	SLV 1	0	0	0	0	No
86	F	0.988	SLV 1	0.241	0.988	459	0.986	No
	V	0	SLV 1	0	0	0	0	No
87	F	0.627	SLV 1	0.149	0.608	135	0.597	No
	V	0	SLV 1	0	0	0	0	No
88	F	0.297	SLV 15	0.07	0.286	22	0.284	No
	V	0	SLV 1	0	0	0	0	No
89	F	0.788	SLV 13	0.191	0.78	246	0.764	No
	V	0	SLV 1	0	0	0	0	No
90	F	0.497	SLV 1	0.117	0.479	77	0.474	No
	V	0	SLV 1	0	0	0	0	No
91	F	0.228	SLV 9	0.053	0.218	11	0.214	No
	V	0	SLV 1	0	0	0	0	No
92	F	0.042	SLV 7	0	0	0	0	No
	V	0	SLV 1	0	0	0	0	No
93	F	0.316	SLV 3	0.074	0.303	25	0.299	No

Trave	Stato limite	Molt.	Comb.	PGA	iPGA (ζE)	TR	(TR/TRrif)^.41	Verifica
	V	0	SLV 1	0	0	0	0	No
94	F	0.643	SLV 1	0.153	0.627	144	0.613	No
	V	0	SLV 1	0	0	0	0	No
95	F	0.363	SLV 5	0.086	0.351	36	0.347	No
	V	0	SLV 1	0	0	0	0	No
96	F	2.891	SLV 13	0.362	1.483	1618	1.653	Si
	V	0	SLV 1	0	0	0	0	No
97	F	1.583	SLV 13	0.362	1.483	1618	1.653	Si
	V	0	SLV 1	0	0	0	0	No
98	F	0.891	SLV 1	0.217	0.887	345	0.877	No
	V	0	SLV 1	0	0	0	0	No
99	F	1.219	SLV 15	0.294	1.203	824	1.253	Si
	V	0	SLV 1	0	0	0	0	No
100	F	1000	SLV 1	0.362	1.483	1618	1.653	Si
	V	0	SLV 1	0	0	0	0	No
101	F	1.408	SLV 1	0.337	1.377	1268	1.496	Si
	V	0	SLV 1	0	0	0	0	No
102	F	0.98	SLV 13	0.239	0.979	448	0.976	No
	V	0	SLV 1	0	0	0	0	No
103	F	1.067	SLV 15	0.26	1.062	569	1.077	Si
	V	0	SLV 1	0	0	0	0	No
104	F	0.7	SLV 15	0.168	0.687	178	0.669	No
	V	0	SLV 1	0	0	0	0	No
105	F	0.767	SLV 15	0.186	0.759	229	0.741	No
	V	0	SLV 1	0	0	0	0	No
106	F	1.038	SLV 9	0.253	1.035	526	1.043	Si
	V	0	SLV 1	0	0	0	0	No
107	F	1.195	SLV 3	0.288	1.181	780	1.226	Si
	V	0	SLV 1	0	0	0	0	No
108	F	1.078	SLV 3	0.262	1.073	585	1.089	Si
	V	0	SLV 1	0	0	0	0	No
109	F	1.547	SLV 3	0.362	1.483	1618	1.653	Si
	V	0	SLV 1	0	0	0	0	No
110	F	1.528	SLV 3	0.362	1.483	1618	1.653	Si
	V	0	SLV 1	0	0	0	0	No
111	F	1000	SLV 1	0.362	1.483	1618	1.653	Si
	V	0	SLV 1	0	0	0	0	No
112	F	2.023	SLV 13	0.362	1.483	1618	1.653	Si
	V	0	SLV 1	0	0	0	0	No
113	F	0.968	SLV 13	0.236	0.967	434	0.964	No
	V	0	SLV 1	0	0	0	0	No
114	F	1.649	SLV 13	0.362	1.483	1618	1.653	Si
	V	0	SLV 1	0	0	0	0	No
115	F	0.124	SLV 11	0.026	0.107	2	0.106	No
	V	0.018	SLV 9	0	0	0	0	No
116	F	0.87	SLV 13	0.211	0.865	323	0.854	No
	V	0	SLV 1	0	0	0	0	No
117	F	0.121	SLV 11	0.026	0.107	2	0.106	No
	V	0	SLV 1	0	0	0	0	No
118	F	0.129	SLV 11	0.026	0.107	2	0.106	No
	V	0	SLV 1	0	0	0	0	No
119	F	0.361	SLV 5	0.085	0.346	35	0.343	No
	V	0	SLV 1	0	0	0	0	No
120	F	1.286	SLV 1	0.309	1.265	958	1.333	Si
	V	0	SLV 1	0	0	0	0	No
121	F	1.193	SLV 13	0.288	1.179	776	1.223	Si
	V	0	SLV 1	0	0	0	0	No
122	F	1.015	SLV 13	0.248	1.014	495	1.017	Si
	V	0	SLV 1	0	0	0	0	No
123	F	1.087	SLV 13	0.264	1.081	599	1.1	Si
	V	0	SLV 1	0	0	0	0	No
124	F	1.518	SLV 13	0.361	1.479	1602	1.646	Si
	V	0	SLV 1	0	0	0	0	No
125	F	1.271	SLV 1	0.306	1.251	927	1.315	Si
	V	0	SLV 1	0	0	0	0	No
126	F	0.967	SLV 1	0.236	0.965	432	0.962	No
	V	0	SLV 1	0	0	0	0	No
127	F	0.437	SLV 15	0.103	0.42	55	0.413	No
	V	0	SLV 1	0	0	0	0	No
128	F	1.115	SLV 13	0.27	1.107	643	1.132	Si
	V	0	SLV 1	0	0	0	0	No
129	F	0.786	SLV 3	0.19	0.779	245	0.762	No
	V	0	SLV 1	0	0	0	0	No
130	F	0.287	SLV 9	0.067	0.275	20	0.273	No
	V	0	SLV 1	0	0	0	0	No
131	F	0.131	SLV 7	0.031	0.127	3	0.125	No
	V	0	SLV 1	0	0	0	0	No
132	F	0.15	SLV 7	0.035	0.143	4	0.141	No
	V	0	SLV 1	0	0	0	0	No
133	F	0.943	SLV 1	0.23	0.94	403	0.935	No
	V	0	SLV 1	0	0	0	0	No
134	F	0.113	SLV 7	0.026	0.107	2	0.106	No
	V	0	SLV 1	0	0	0	0	No
135	F	3.665	SLV 13	0.362	1.483	1618	1.653	Si
	V	0	SLV 1	0	0	0	0	No
136	F	2.249	SLV 13	0.362	1.483	1618	1.653	Si
	V	0	SLV 1	0	0	0	0	No
137	F	1.045	SLV 1	0.255	1.042	537	1.052	Si
	V	0	SLV 1	0	0	0	0	No
138	F	1.565	SLV 15	0.362	1.483	1618	1.653	Si
	V	0	SLV 1	0	0	0	0	No

Trave	Stato limite	Molt.	Comb.	PGA	iPGA (ζE)	TR	(TR/TRrif)^.41	Verifica
139	F	1000	SLV 1	0.362	1.483	1618	1.653	Si
	V	0	SLV 1	0	0	0	0	No
140	F	2.07	SLV 1	0.362	1.483	1618	1.653	Si
	V	0	SLV 1	0	0	0	0	No
141	F	1.823	SLV 15	0.362	1.483	1618	1.653	Si
	V	0	SLV 1	0	0	0	0	No
142	F	1.951	SLV 15	0.362	1.483	1618	1.653	Si
	V	0	SLV 1	0	0	0	0	No
143	F	0.954	SLV 15	0.233	0.952	416	0.947	No
	V	0	SLV 1	0	0	0	0	No
144	F	0.8	SLV 15	0.194	0.793	257	0.777	No
	V	0	SLV 1	0	0	0	0	No
145	F	1.745	SLV 3	0.362	1.483	1618	1.653	Si
	V	0.08	SLV 1	0	0	0	0	No
146	F	0.941	SLV 1	0.229	0.938	401	0.933	No
	V	0	SLV 1	0	0	0	0	No
147	F	3.497	SLV 3	0.362	1.483	1618	1.653	Si
	V	0	SLV 1	0	0	0	0	No
148	F	1.534	SLV 3	0.362	1.483	1618	1.653	Si
	V	0	SLV 1	0	0	0	0	No
149	F	1000	SLV 1	0.362	1.483	1618	1.653	Si
	V	0.418	SLV 15	0.098	0.403	50	0.397	No
150	F	2.431	SLV 13	0.362	1.483	1618	1.653	Si
	V	0.164	SLV 9	0.038	0.157	5	0.155	No
151	F	1.714	SLV 13	0.362	1.483	1618	1.653	Si
	V	0	SLV 1	0	0	0	0	No
152	F	1.065	SLV 13	0.259	1.061	566	1.075	Si
	V	0	SLV 1	0	0	0	0	No
153	F	1.759	SLV 9	0.362	1.483	1618	1.653	Si
	V	0	SLV 1	0	0	0	0	No
154	F	0.309	SLV 11	0.073	0.298	24	0.294	No
	V	0	SLV 1	0	0	0	0	No
155	F	0.486	SLV 5	0.114	0.468	72	0.461	No
	V	0	SLV 1	0	0	0	0	No
156	F	2.147	SLV 1	0.362	1.483	1618	1.653	Si
	V	0.077	SLV 13	0	0	0	0	No
157	F	0.584	SLV 13	0.139	0.567	115	0.559	No
	V	0	SLV 1	0	0	0	0	No
158	F	1.941	SLV 13	0.362	1.483	1618	1.653	Si
	V	0.121	SLV 13	0.026	0.107	2	0.106	No
159	F	1.011	SLV 13	0.247	1.01	489	1.012	Si
	V	0	SLV 1	0	0	0	0	No
160	F	2.498	SLV 13	0.362	1.483	1618	1.653	Si
	V	0.078	SLV 1	0	0	0	0	No
161	F	0.603	SLV 1	0.143	0.585	123	0.575	No
	V	0	SLV 1	0	0	0	0	No
162	F	2.66	SLV 1	0.362	1.483	1618	1.653	Si
	V	0	SLV 1	0	0	0	0	No
163	F	0.609	SLV 15	0.144	0.591	126	0.58	No
	V	0	SLV 1	0	0	0	0	No
164	F	2.028	SLV 13	0.362	1.483	1618	1.653	Si
	V	0	SLV 1	0	0	0	0	No
165	F	1.491	SLV 3	0.355	1.453	1513	1.608	Si
	V	0.027	SLV 3	0	0	0	0	No
166	F	0.42	SLV 9	0.099	0.407	51	0.401	No
	V	0	SLV 1	0	0	0	0	No
167	F	0.304	SLV 7	0.071	0.292	23	0.289	No
	V	0	SLV 1	0	0	0	0	No
168	F	1.716	SLV 5	0.362	1.483	1618	1.653	Si
	V	0	SLV 1	0	0	0	0	No
169	F	1000	SLV 1	0.362	1.483	1618	1.653	Si
	V	0.168	SLV 15	0.038	0.157	5	0.155	No
170	F	0.724	SLV 11	0.174	0.713	194	0.693	No
	V	0	SLV 1	0	0	0	0	No
171	F	1.564	SLV 1	0.362	1.483	1618	1.653	Si
	V	0	SLV 1	0	0	0	0	No
172	F	1.062	SLV 15	0.258	1.058	561	1.071	Si
	V	0	SLV 1	0	0	0	0	No
173	F	1000	SLV 1	0.362	1.483	1618	1.653	Si
	V	0.317	SLV 3	0.074	0.303	25	0.299	No
174	F	1.788	SLV 5	0.362	1.483	1618	1.653	Si
	V	0	SLV 1	0	0	0	0	No
175	F	1000	SLV 1	0.362	1.483	1618	1.653	Si
	V	0	SLV 1	0	0	0	0	No
176	F	1.234	SLV 11	0.297	1.216	853	1.271	Si
	V	0	SLV 1	0	0	0	0	No
177	F	1.377	SLV 15	0.33	1.349	1183	1.454	Si
	V	0	SLV 1	0	0	0	0	No
178	F	0.857	SLV 13	0.208	0.852	310	0.839	No
	V	0	SLV 1	0	0	0	0	No
179	F	1000	SLV 1	0.362	1.483	1618	1.653	Si
	V	0.11	SLV 5	0.026	0.107	2	0.106	No
180	F	1.801	SLV 11	0.362	1.483	1618	1.653	Si
	V	0	SLV 1	0	0	0	0	No
181	F	1.592	SLV 7	0.362	1.483	1618	1.653	Si
	V	0	SLV 1	0	0	0	0	No
182	F	4.002	SLV 7	0.362	1.483	1618	1.653	Si
	V	0.13	SLV 9	0.026	0.107	2	0.106	No
183	F	0	SLV 1	0	0	0	0	No
	V	0	SLV 1	0	0	0	0	No
184	F	0.633	SLV 13	0.151	0.617	139	0.604	No

Trave	Stato limite	Molt.	Comb.	PGA	iPGA (ζE)	TR	(TR/TRrif)^.41	Verifica
	V	0.04	SLV 1	0	0	0	0	No
185	F	0.324	SLV 13	0.077	0.313	27	0.309	No
	V	0	SLV 1	0	0	0	0	No
186	F	0.818	SLV 15	0.198	0.811	273	0.797	No
	V	0.029	SLV 13	0	0	0	0	No
187	F	0.64	SLV 15	0.152	0.623	142	0.61	No
	V	0	SLV 1	0	0	0	0	No
188	F	1.43	SLV 3	0.341	1.398	1330	1.525	Si
	V	0.113	SLV 13	0.026	0.107	2	0.106	No
189	F	3.025	SLV 7	0.362	1.483	1618	1.653	Si
	V	0.036	SLV 13	0	0	0	0	No

Periodi di ritorno e accelerazioni di aggancio per gli Stati Limite

S. L.	TR,C	PGA,C	TR,Rif	PGA,Rif	Tipo rottura
Stato limite di salvaguardia della vita	0	0	475	0.244	taglio maschio muratura

Coefficienti relativi alle Linee guida per la classificazione del rischio sismico delle costruzioni secondo il D.M. 24 09/01/2020

TR,C	TR,Rif	PAM	Classe PAM	IS-V	Classe IS-V	Tipo rottura
0	475	8.22	G	0	F	taglio maschio muratura

Classe PAM

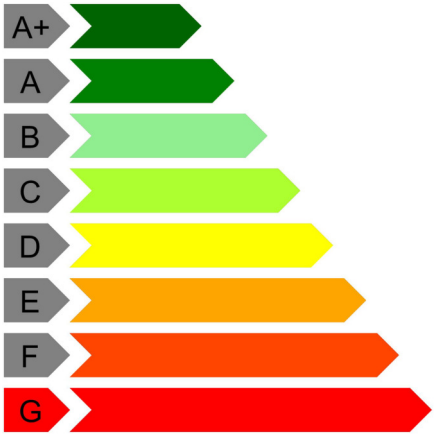

Classe IS-V

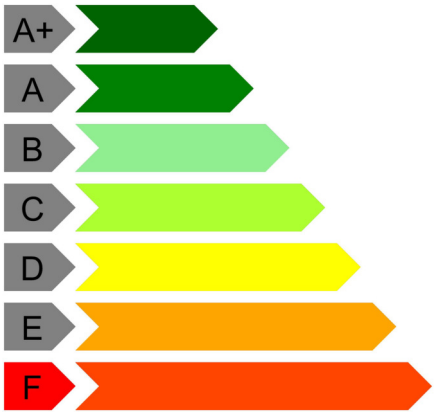

2.3 Verifiche maschi in muratura

Le unità di misura elencate nel capitolo sono in [m, daN, s] ove non espressamente specificato.

X ini.: *coordinate del punto iniziale del maschio. [m]*
Y ini.: *coordinate del punto iniziale del maschio. [m]*
X fin.: *coordinate del punto finale del maschio. [m]*
Y fin.: *coordinate del punto finale del maschio. [m]*
Quota i.: *livello o falda inferiore.*
Quota.s: *livello o falda superiore.*
l: *lunghezza del maschio. [m]*
Sp.: *spessore. [m]*
h netta: *altezza netta (a filo solai). [m]*

h ini.: altezza nel modello al punto iniziale. [m]
h fin.: altezza nel modello al punto finale. [m]
a: distanza tra irrigidimenti laterali. [m]
a.s.,sx: lunghezza di appoggio del solaio di sinistra. [m]
a.s.,dx: lunghezza di appoggio del solaio di destra. [m]
fb: resistenza normalizzata a compressione verticale dei blocchi. [daN/m²]
fk: resistenza caratteristica a compressione della muratura utilizzata. [daN/m²]
fvk0: resistenza caratteristica a taglio in assenza di carichi verticali. [daN/m²]
fmedio: resistenza media a compressione della muratura utilizzata. [daN/m²]
τ0: resistenza media a taglio in assenza di azioni normali [C8.7.1.16]. [daN/m²]
fv0: resistenza media a taglio in assenza di azioni normali [C8.7.1.17]. [daN/m²]
μ: coefficiente di attrito [C8.7.1.17].
φ: coefficiente di ammorsamento o ingranamento secondo Circolare 7 21-01-19 §C8.7.1.3.1.1.
fv,lim: valore massimo della resistenza a taglio che può essere impiegata nel calcolo. [daN/m²]
E: modulo di elasticità longitudinale della muratura utilizzato. [daN/m²]
G: modulo di elasticità tangenziale della muratura utilizzato. [daN/m²]
FC: fattore di confidenza della muratura.
Comb.: combinazione.
Quota: quota della sezione di verifica. [m]
N: sforzo normale. [daN]
*M: momento flettente nel piano. [daN*m]*
σ0: tensione media di compressione. [daN/m²]
*Mu: momento flettente ultimo. [daN*m]*
c.s.: coefficiente di sicurezza.
Verifica: stato di verifica.
V par: taglio nel piano. [daN]
σN: tensione media di compressione sulla parte reagente. [daN/m²]
l': lunghezza della parte compressa della parete. [m]
fvd: resistenza a taglio di calcolo. [daN/m²]
Vt scorr.: taglio ultimo per verifica a scorrimento. [daN]
Vt fess.diag.: taglio ultimo per verifica a fessurazione diagonale regolare [C8.7.1.17]. [daN]
Vt,lim: taglio limite [C8.7.1.18]. [daN]
c.s.: coefficiente di sicurezza a taglio.
fd: resistenza a compressione di calcolo. [daN/m²]
Sa: accelerazione massima, adimensionalizzata rispetto a g, che l'elemento strutturale subisce durante il sisma.
*M: momento flettente fuori piano. [daN*m]*
*Mc: momento di collasso per azioni perpendicolari al piano. [daN*m]*
Coeff.s.: coefficiente di sicurezza.
N top: sforzo normale in sommità. [daN]
N base: sforzo normale al piede. [daN]
V orto: taglio fuori piano. [daN]
α0: moltiplicatore secondo [C8.7.1.1].
M: massa partecipante al cinematismo. [daN/(m/s²)]*
e: frazione di massa partecipante della muratura [C8.7.1.5].*
a0: accelerazione spettrale di attivazione del meccanismo [C8.7.1.8]. [m/s²]*
aLim: accelerazione limite [C7.2.11]. [m/s²]
Stato limite: pF_SLU=Presso flessione per azioni non sismiche; V_SLU=Taglio per azioni non sismiche; PF_SLV=Presso flessione per azioni sismiche; V_SLV=Taglio per azioni sismiche; PFFP_SLV=Presso flessione fuori piano per azioni sismiche; R_SLV=Ribaltamento per azioni sismiche.

Maschio 1

Verifiche condotte secondo D.M. 17-01-18 (N.T.C.)

Dati geometrici

X ini.	Y ini.	X fin.	Y fin.	Quota i.	Quota.s	l	Sp.	h netta	h ini.	h fin.	a	a.s.,sx	a.s.,dx
-24.647	5.865	-24.647	-3.292	L1	L3	9.157	0.45	2.99	2.99	2.99			

Caratteristiche del materiale

(Circolare 7 21-01-19 C8.5.I) Muratura in mattoni pieni e malta di calce LC2_Corti

fb	fk	fvk0	fmedio	τ0	fv0	μ	ϕ	fv,lim	E	G	FC
600000			345000	9000	20000	0.58	0.77	32500	320000000	128000000	1.2

Verifica a pressoflessione nel piano secondo D.M. 17-01-18 NTC §7.8.2.2.1 in combinazioni non sismiche, γM = 3

Comb.	Quota	N	M	σ0	Mu	c.s.	Verifica
SLU 77	-1.67	-237733	20229.56	57695	317522	15.696	Si
SLU 77	1.32	-220168	40492.95	53432	346811.74	8.565	Si
SLU 75	-1.67	-234065	27104.25	56805	324332.75	11.966	Si
SLU 75	1.32	-215690	42611.62	52345	352932.44	8.283	Si
SLU 78	-1.67	-237217	25036.59	57570	318502.38	12.721	Si
SLU 78	1.32	-218919	40420.8	53129	348574.2	8.624	Si
SLU 84	-1.67	-240516	27893.43	58370	312108.19	11.189	Si
SLU 84	1.32	-221955	43862.21	53866	344216.83	7.848	Si
SLU 74	-1.67	-234581	22297.22	56930	323396.74	14.504	Si
SLU 74	1.32	-216939	42683.77	52648	351280.02	8.23	Si
SLU 83	-1.67	-241032	23086.41	58496	311081.37	13.475	Si
SLU 83	1.32	-223204	43934.36	54169	342350.91	7.792	Si
SLU 73	-1.67	-229049	31734.27	55587	333053.98	10.495	Si

Comb.	Quota	N	M	σ0	Mu	c.s.	Verifica
SLU 73	1.32	-209987	43856.34	50961	359935.84	8.207	Si
SLU 82	-1.67	-237365	29961.09	57605	318222.22	10.621	Si
SLU 82	1.32	-218726	46053.03	53082	348842.49	7.575	Si
SLU 81	-1.67	-237881	25154.06	57731	317239.76	12.612	Si
SLU 81	1.32	-219975	46125.18	53385	347086.61	7.525	Si
SLU 76	-1.67	-232201	29666.61	56352	327654.86	11.045	Si
SLU 76	1.32	-213215	41665.52	51745	356079.96	8.546	Si

Verifica a pressoflessione nel piano secondo D.M. 17-01-18 NTC §7.8.2.2.1 in combinazioni sismiche, γM = 2

Comb.	Quota	N	M	σ0	Mu	c.s.	Verifica
SLV 14	-1.67	-73144	65607	17751	286229.53	4.363	Si
SLV 14	1.32	-62897	78090.3	15264	251992.41	3.227	Si
SLV 9	-1.67	-138291	164471.25	33562	459238.89	2.792	Si
SLV 9	1.32	-124491	166435.09	30212	429032.07	2.578	Si
SLV 8	-1.67	-189421	-132112.8	45970	540959.56	4.095	Si
SLV 8	1.32	-175853	-105286.54	42677	523907.52	4.976	Si
SLV 6	-1.67	-193045	161213.99	46850	544947.19	3.38	Si
SLV 6	1.32	-176954	161979.42	42945	525416.71	3.244	Si
SLV 12	-1.67	-134668	-128855.55	32682	451642.72	3.505	Si
SLV 12	1.32	-123389	-100830.86	29945	426471.88	4.23	Si
SLV 11	-1.67	-134668	-128855.55	32682	451642.72	3.505	Si
SLV 11	1.32	-123389	-100830.86	29945	426471.88	4.23	Si
SLV 5	-1.67	-193045	161213.99	46850	544947.19	3.38	Si
SLV 5	1.32	-176954	161979.42	42945	525416.71	3.244	Si
SLV 10	-1.67	-138291	164471.25	33562	459238.89	2.792	Si
SLV 10	1.32	-124491	166435.09	30212	429032.07	2.578	Si
SLV 7	-1.67	-189421	-132112.8	45970	540959.56	4.095	Si
SLV 7	1.32	-175853	-105286.54	42677	523907.52	4.976	Si
SLV 13	-1.67	-73144	65607	17751	286229.53	4.363	Si
SLV 13	1.32	-62897	78090.3	15264	251992.41	3.227	Si

Verifica a taglio nel piano secondo D.M. 17-01-18 (N.T.C.) §7.8.2.2.2 con rottura per scorrimento in combinazioni non sismiche, γM = 3

Comb.	Quota	N	V par	M	σ0	σN	I'	fvd	Vt scorr.	Vt fess.diag.	Vt,lim	c.s.	Verifica
SLU 60	-1.67	-219665	-76	23089.01		53310	9.1567	10833	44639			587.7	Si
SLU 60	1.32	-201602	-2662	42349.48		48926	9.1567	10833	44639			16.77	Si
SLU 56	-1.67	-219517	-79	18164.51		53274	9.1567	10833	44639			568.56	Si
SLU 56	1.32	-201795	-2670	36717.25		48973	9.1567	10833	44639			16.72	Si
SLU 77	-1.67	-237733	-59	20229.56		57695	9.1567	10833	44639			752.9	Si
SLU 77	1.32	-220168	-2881	40492.95		53432	9.1567	10833	44639			15.49	Si
SLU 74	-1.67	-234581	-63	22297.22		56930	9.1567	10833	44639			712.22	Si
SLU 74	1.32	-216939	-2844	42683.77		52648	9.1567	10833	44639			15.69	Si
SLU 83	-1.67	-241032	-53	23086.41		58496	9.1567	10833	44639			836.79	Si
SLU 83	1.32	-223204	-2911	43934.36		54169	9.1567	10833	44639			15.34	Si
SLU 69	-1.67	-219133	-83	16889.37		53181	9.1567	10833	44639			536.33	Si
SLU 69	1.32	-201720	-2677	35479.58		48955	9.1567	10833	44639			16.67	Si
SLU 62	-1.67	-222817	-73	21021.35		54075	9.1567	10833	44639			615.13	Si
SLU 62	1.32	-204831	-2699	40158.66		49710	9.1567	10833	44639			16.54	Si
SLU 79	-1.67	-236212	-60	19587.24		57326	9.1567	10833	44639			741.28	Si
SLU 79	1.32	-218526	-2860	39594.95		53034	9.1567	10833	44639			15.61	Si
SLU 71	-1.67	-217612	-84	16247.05		52812	9.1567	10833	44639			530.41	Si
SLU 71	1.32	-200078	-2656	34581.58		48556	9.1567	10833	44639			16.81	Si
SLU 81	-1.67	-237881	-57	25154.06		57731	9.1567	10833	44639			786.84	Si
SLU 81	1.32	-219975	-2874	46125.18		53385	9.1567	10833	44639			15.53	Si

Verifica a taglio nel piano secondo D.M. 17-01-18 (N.T.C.) §7.8.2.2.2 con rottura per scorrimento in combinazioni sismiche, γM = 2

Comb.	Quota	N	V par	M	σ0	σN	I'	fvd	Vt scorr.	Vt fess.diag.	Vt,lim	c.s.	Verifica
SLV 11	-1.67	-134668	-33415	-128855.55		32682	9.1567	14870	61271			1.83	Si
SLV 11	1.32	-123389	-38181	-100830.86		29945	9.1567	14322	59015			1.55	Si
SLV 8	-1.67	-189421	-33831	-132112.8		45970	9.1567	16250	66958			1.98	Si
SLV 8	1.32	-175853	-42869	-105286.54		42677	9.1567	16250	66958			1.56	Si
SLV 6	-1.67	-193045	33281	161213.99		46850	9.1567	16250	66958			2.01	Si
SLV 6	1.32	-176954	34185	161979.42		42945	9.1567	16250	66958			1.96	Si
SLV 12	-1.67	-134668	-33415	-128855.55		32682	9.1567	14870	61271			1.83	Si
SLV 12	1.32	-123389	-38181	-100830.86		29945	9.1567	14322	59015			1.55	Si
SLV 9	-1.67	-138291	33697	164471.25		33562	9.1567	15046	61996			1.84	Si
SLV 9	1.32	-124491	38872	166435.09		30212	9.1567	14376	59236			1.52	Si
SLV 13	-1.67	-73144	10693	65607		17751	9.1567	11884	48967			4.58	Si
SLV 13	1.32	-62897	17373	78090.3		15264	9.1567	11386	46917			2.7	Si
SLV 5	-1.67	-193045	33281	161213.99		46850	9.1567	16250	66958			2.01	Si
SLV 5	1.32	-176954	34185	161979.42		42945	9.1567	16250	66958			1.96	Si
SLV 10	-1.67	-138291	33697	164471.25		33562	9.1567	15046	61996			1.84	Si
SLV 10	1.32	-124491	38872	166435.09		30212	9.1567	14376	59236			1.52	Si
SLV 14	-1.67	-73144	10693	65607		17751	9.1567	11884	48967			4.58	Si
SLV 14	1.32	-62897	17373	78090.3		15264	9.1567	11386	46917			2.7	Si
SLV 7	-1.67	-189421	-33831	-132112.8		45970	9.1567	16250	66958			1.98	Si
SLV 7	1.32	-175853	-42869	-105286.54		42677	9.1567	16250	66958			1.56	Si

Verifica a pressoflessione fuori piano D.M. 17-01-18 (N.T.C.)

quota -0.175 Wa 0.08 denominatore 8 γM = 2

Comb.	fd	Sa	σ0	N	M	Mc	Coeff.s.	Verifica
SLV 16	143750	0.24	16422	-67666	675.01	13178.66	19.52	Si
SLV 15	143750	0.24	16422	-67666	675.01	13178.66	19.52	Si
SLV 14	143750	0.24	16428	-67691	675.01	13182.83	19.53	Si
SLV 13	143750	0.24	16428	-67691	675.01	13182.83	19.53	Si
SLV 11	143750	0.24	31198	-128551	675.01	21538.91	31.91	Si
SLV 12	143750	0.24	31198	-128551	675.01	21538.91	31.91	Si
SLV 10	143750	0.24	31218	-128635	675.01	21548.2	31.92	Si
SLV 9	143750	0.24	31218	-128635	675.01	21548.2	31.92	Si
SLV 7	143750	0.24	43869	-180763	675.01	26069.36	38.62	Si

Comb.	fd	Sa	σ0	N	M	Mc	Coeff.s.	Verifica
SLV 8	143750	0.24	43869	-180763	675.01	26069.36	38.62	Si

Verifica dei meccanismi locali di collasso con analisi cinematica lineare

forza di aggancio al piano = 0 quota mezzeria = -0.175 Wa = 0.08 Ta = 0.0332

Comb.	N top	N base	V orto	α0	M*	e*	a0*	aLim	Verifica
SLV 3	-237446	-254568	-6678	0.052	25912.8	0.979	0.76794	3.6078	No
SLV 4	-237446	-254568	-6678	0.052	25912.8	0.979	0.76794	3.6078	No
SLV 1	-237776	-255655	-6447	0.053	25946.5	0.979	0.78217	3.6078	No
SLV 2	-237776	-255655	-6447	0.053	25946.5	0.979	0.78217	3.6078	No
SLV 8	-175853	-189421	-4482	0.056	19638.6	0.973	0.83266	3.42705	No
SLV 7	-175853	-189421	-4482	0.056	19638.6	0.973	0.83266	3.42705	No
SLV 5	-176954	-193045	-3712	0.06	19750.8	0.973	0.89542	3.42705	No
SLV 6	-176954	-193045	-3712	0.06	19750.8	0.973	0.89542	3.42705	No
SLV 11	-123389	-134668	-2369	0.064	14297.6	0.964	0.96293	3.42705	No
SLV 12	-123389	-134668	-2369	0.064	14297.6	0.964	0.96293	3.42705	No

Tabella dei coefficienti di sicurezza minimi

Stato limite	Coeff.s.	Comb.	Verifica
PF_SLU	7.525	SLU 81	Si
V_SLU	15.336	SLU 83	Si
PF_SLV	2.578	SLV 9	Si
V_SLV	1.524	SLV 9	Si
PFFP_SLV	19.524	SLV 15	Si
R_SLV	0.213	SLV 3	No

Maschio 2

Verifiche condotte secondo D.M. 17-01-18 (N.T.C.)

Dati geometrici

X ini.	Y ini.	X fin.	Y fin.	Quota i.	Quota.s	l	Sp.	h netta	h ini.	h fin.	a	a.s.,sx	a.s.,dx
-22.863	5.865	-24.647	5.865	L1	L3	1.785	0.45	2.99	2.99	2.99			

Caratteristiche del materiale

(Circolare 7 21-01-19 C8.5.I) Muratura in mattoni pieni e malta di calce LC2_Corti

fb	fk	fvk0	fmedio	τ0	fv0	μ	ϕ	fv,lim	E	G	FC
600000			345000	9000	20000	0.58	0.77	32500	320000000	128000000	1.2

Verifica a pressoflessione nel piano secondo D.M. 17-01-18 NTC §7.8.2.2.1 in combinazioni non sismiche, γM = 3

Comb.	Quota	N	M	σ0	Mu	c.s.	Verifica
SLU 51	0.33	-26254	1181.78	32690	14026.57	11.869	Si
SLU 51	0.73	-24608	1712.72	30640	13699.67	7.999	Si
SLU 69	0.33	-29622	1242.29	36883	14465.05	11.644	Si
SLU 69	0.73	-27856	1832.03	34684	14273.66	7.791	Si
SLU 49	0.33	-26411	1193.37	32885	14053.83	11.777	Si
SLU 49	0.73	-24757	1729.11	30825	13732.22	7.942	Si
SLU 71	0.33	-29465	1230.7	36688	14451.51	11.743	Si
SLU 71	0.73	-27707	1815.65	34499	14253.68	7.85	Si
SLU 50	0.33	-26566	1235.68	33077	14080.06	11.395	Si
SLU 50	0.73	-24889	1774.08	30990	13760.69	7.757	Si
SLU 72	0.33	-29154	1176.8	36300	14422.64	12.256	Si
SLU 72	0.73	-27426	1754.29	34149	14214.25	8.103	Si
SLU 70	0.33	-29311	1188.39	36496	14437.51	12.149	Si
SLU 70	0.73	-27575	1770.68	34334	14235.38	8.04	Si
SLU 45	0.33	-26138	1172.9	32545	14005.92	11.941	Si
SLU 45	0.73	-24482	1706.61	30483	13671.48	8.011	Si
SLU 48	0.33	-26722	1247.27	33272	14105.98	11.309	Si
SLU 48	0.73	-25038	1790.46	31175	13792.1	7.703	Si
SLU 66	0.33	-29038	1167.92	36156	14411.18	12.339	Si
SLU 66	0.73	-27300	1748.18	33991	14195.79	8.12	Si

Verifica a pressoflessione nel piano secondo D.M. 17-01-18 NTC §7.8.2.2.1 in combinazioni sismiche, γM = 2

Comb.	Quota	N	M	σ0	Mu	c.s.	Verifica
SLV 3	0.33	-34301	5935.33	42709	19910.22	3.355	Si
SLV 3	0.73	-33931	3513.77	42248	19809.54	5.638	Si
SLV 1	0.33	-26610	5270.41	33133	17307.17	3.284	Si
SLV 1	0.73	-26518	2718.13	33018	17269.22	6.353	Si
SLV 10	0.33	-6645	-1736.94	8273	5528.07	3.183	Si
SLV 10	0.73	-5478	-640.68	6821	4615.89	7.205	Si
SLV 9	0.33	-6645	-1736.94	8273	5528.07	3.183	Si
SLV 9	0.73	-5478	-640.68	6821	4615.89	7.205	Si
SLV 15	0.33	-17388	-3651.74	21650	12767.16	3.496	Si
SLV 15	0.73	-14868	-225.58	18512	11257.58	49.906	Si
SLV 4	0.33	-34301	5935.33	42709	19910.22	3.355	Si
SLV 4	0.73	-33931	3513.77	42248	19809.54	5.638	Si
SLV 16	0.33	-17388	-3651.74	21650	12767.16	3.496	Si
SLV 16	0.73	-14868	-225.58	18512	11257.58	49.906	Si
SLV 2	0.33	-26610	5270.41	33133	17307.17	3.284	Si
SLV 2	0.73	-26518	2718.13	33018	17269.22	6.353	Si
SLV 13	0.33	-9697	-4316.67	12074	7798.55	1.807	Si
SLV 13	0.73	-7455	-1021.21	9282	6147.23	6.02	Si
SLV 14	0.33	-9697	-4316.67	12074	7798.55	1.807	Si
SLV 14	0.73	-7455	-1021.21	9282	6147.23	6.02	Si

Verifica a taglio nel piano secondo D.M. 17-01-18 (N.T.C.) §7.8.2.2.2 con rottura per scorrimento in combinazioni non sismiche, γM = 3

Comb.	Quota	N	V par	M	σ0	σN	l'	fvd	Vt scorr.	Vt fess.diag.	Vt,lim	c.s.	Verifica

Comb.	Quota	N	V par	M	σ0	σN	l'	fvd	Vt scorr.	Vt fess.diag.	Vt,lim	c.s.	Verifica
SLU 83	0.33	-33228	-4123	1036.15		41373	1.7847	10833	8701			2.11	Si
SLU 83	0.73	-31423	-4204	1670.61		39126	1.7847	10772	8652			2.06	Si
SLU 56	0.33	-29765	-3885	1163.15		37061	1.7847	10497	8430			2.17	Si
SLU 56	0.73	-28028	-3959	1747.63		34899	1.7847	10209	8199			2.07	Si
SLU 80	0.33	-32197	-4030	1092.68		40089	1.7847	10833	8701			2.16	Si
SLU 80	0.73	-30417	-4109	1711.46		37872	1.7847	10605	8517			2.07	Si
SLU 66	0.33	-29038	-3844	1167.92		36156	1.7847	10376	8334			2.17	Si
SLU 66	0.73	-27300	-3916	1748.18		33991	1.7847	10088	8102			2.07	Si
SLU 69	0.33	-29622	-3929	1242.29		36883	1.7847	10473	8411			2.14	Si
SLU 69	0.73	-27856	-4003	1832.03		34684	1.7847	10180	8176			2.04	Si
SLU 79	0.33	-32508	-4115	1146.58		40476	1.7847	10833	8701			2.11	Si
SLU 79	0.73	-30698	-4196	1772.82		38222	1.7847	10652	8555			2.04	Si
SLU 78	0.33	-32353	-4059	1104.27		40284	1.7847	10833	8701			2.14	Si
SLU 78	0.73	-30565	-4140	1727.85		38058	1.7847	10630	8537			2.06	Si
SLU 74	0.33	-32080	-4060	1083.79		39944	1.7847	10833	8701			2.14	Si
SLU 74	0.73	-30290	-4139	1705.35		37715	1.7847	10584	8501			2.05	Si
SLU 71	0.33	-29465	-3899	1230.7		36688	1.7847	10447	8391			2.15	Si
SLU 71	0.73	-27707	-3973	1815.65		34499	1.7847	10155	8156			2.05	Si
SLU 77	0.33	-32664	-4145	1158.17		40671	1.7847	10833	8701			2.1	Si
SLU 77	0.73	-30846	-4226	1789.2		38407	1.7847	10677	8575			2.03	Si

Verifica a taglio nel piano secondo D.M. 17-01-18 (N.T.C.) §7.8.2.2.2 con rottura per scorrimento in combinazioni sismiche, γM = 2

Comb.	Quota	N	V par	M	σ0	σN	l'	fvd	Vt scorr.	Vt fess.diag.	Vt,lim	c.s.	Verifica
SLV 9	0.33	-6645	-4567	-1736.94		8273	1.7847	9988	8022			1.76	Si
SLV 9	0.73	-5478	-66	-640.68		6821	1.7847	9698	7788			118.32	Si
SLV 12	0.33	-32280	-5096	479.48		40192	1.7847	16250	13051			2.56	Si
SLV 12	0.73	-30188	-10095	2011.43		37588	1.7847	15851	12730			1.26	Si
SLV 10	0.33	-6645	-4567	-1736.94		8273	1.7847	9988	8022			1.76	Si
SLV 10	0.73	-5478	-66	-640.68		6821	1.7847	9698	7788			118.32	Si
SLV 13	0.33	-9697	-9322	-4316.67		16061	1.3417	11546	6971			0.75	No, Vu<V
SLV 13	0.73	-7455	-8599	-1021.21		9282	1.7847	10190	8184			0.95	No, Vu<V
SLV 15	0.33	-17388	-9481	-3651.74		21650	1.7847	12663	10170			1.07	Si
SLV 15	0.73	-14868	-11607	-225.58		18512	1.7847	12036	9666			0.83	No, Vu<V
SLV 1	0.33	-26610	3735	5270.41		33133	1.7847	14960	12015			3.22	Si
SLV 1	0.73	-26518	5752	2718.13		33018	1.7847	14937	11996			2.09	Si
SLV 14	0.33	-9697	-9322	-4316.67		16061	1.3417	11546	6971			0.75	No, Vu<V
SLV 14	0.73	-7455	-8599	-1021.21		9282	1.7847	10190	8184			0.95	No, Vu<V
SLV 16	0.33	-17388	-9481	-3651.74		21650	1.7847	12663	10170			1.07	Si
SLV 16	0.73	-14868	-11607	-225.58		18512	1.7847	12036	9666			0.83	No, Vu<V
SLV 2	0.33	-26610	3735	5270.41		33133	1.7847	14960	12015			3.22	Si
SLV 2	0.73	-26518	5752	2718.13		33018	1.7847	14937	11996			2.09	Si
SLV 11	0.33	-32280	-5096	479.48		40192	1.7847	16250	13051			2.56	Si
SLV 11	0.73	-30188	-10095	2011.43		37588	1.7847	15851	12730			1.26	Si

Verifica a pressoflessione fuori piano D.M. 17-01-18 (N.T.C.)

quota -0.175 Wa 0.08 denominatore 8 γM = 2

Comb.	fd	Sa	σ0	N	M	Mc	Coeff.s.	Verifica
SLV 10	143750	0.24	8249	-6625	136.44	1390.07	10.19	Si
SLV 9	143750	0.24	8249	-6625	136.44	1390.07	10.19	Si
SLV 13	143750	0.24	9710	-7798	136.44	1615.17	11.84	Si
SLV 14	143750	0.24	9710	-7798	136.44	1615.17	11.84	Si
SLV 6	143750	0.24	16035	-12879	136.44	2517.4	18.45	Si
SLV 5	143750	0.24	16035	-12879	136.44	2517.4	18.45	Si
SLV 16	143750	0.24	18747	-15057	136.44	2867.96	21.02	Si
SLV 15	143750	0.24	18747	-15057	136.44	2867.96	21.02	Si
SLV 1	143750	0.24	35663	-28642	136.44	4563.52	33.45	Si
SLV 2	143750	0.24	35663	-28642	136.44	4563.52	33.45	Si

Verifica dei meccanismi locali di collasso con analisi cinematica lineare

forza di aggancio al piano = 0 quota mezzeria = -0.175 Wa = 0.08 Ta = 0.0332

Comb.	N top	N base	V orto	α0	M*	e*	a0*	aLim	Verifica
SLV 6	-3220	-14628	837	0	686.4	0.893	0	3.42705	No
SLV 9	1319	-6811	544	0	0	0	0	3.42705	No, Trazione
SLV 10	1319	-6811	544	0	0	0	0	3.42705	No, Trazione
SLV 5	-3220	-14628	837	0	686.4	0.893	0	3.42705	No
SLV 2	-19731	-32934	1108	0.032	2347.5	0.957	0.4871	3.6078	No
SLV 1	-19731	-32934	1108	0.032	2347.5	0.957	0.4871	3.6078	No
SLV 4	-29344	-40808	1046	0.047	3325.6	0.969	0.70808	3.6078	No
SLV 3	-29344	-40808	1046	0.047	3325.6	0.969	0.70808	3.6078	No
SLV 8	-35264	-40876	632	0.063	3928.4	0.974	0.93607	3.42705	No
SLV 7	-35264	-40876	632	0.063	3928.4	0.974	0.93607	3.42705	No

Tabella dei coefficienti di sicurezza minimi

Stato limite	Coeff.s.	Comb.	Verifica
PF_SLU	7.703	SLU 48	Si
V_SLU	2.029	SLU 77	Si
PF_SLV	1.807	SLV 13	Si
V_SLV	0.748	SLV 13	No
PFFP_SLV	10.188	SLV 9	Si
R_SLV	0	SLV 10	No

Maschio 3

Verifiche condotte secondo D.M. 17-01-18 (N.T.C.)

Dati geometrici

X ini.	Y ini.	X fin.	Y fin.	Quota i.	Quota.s	l	Sp.	h netta	h ini.	h fin.	a	a.s.,sx	a.s.,dx
-19.618	5.865	-21.863	5.865	L1	L3	2.245	0.45	2.99	2.99	2.99			

Caratteristiche del materiale

(Circolare 7 21-01-19 C8.5.I) Muratura in mattoni pieni e malta di calce LC2_Corti

fb	fk	fvk0	fmedio	τ0	fv0	μ	ϕ	fv,lim	E	G	FC
600000			345000	9000	20000	0.58	0.77	32500	320000000	128000000	1.2

Verifica a pressoflessione nel piano secondo D.M. 17-01-18 NTC §7.8.2.2.1 in combinazioni non sismiche, γM = 3

Comb.	Quota	N	M	σ0	Mu	c.s.	Verifica
SLU 75	0.33	-38176	-2379.87	37789	22973.15	9.653	Si
SLU 75	0.73	-37234	-4117.44	36856	22884.65	5.558	Si
SLU 83	0.33	-39740	-2359.63	39337	23066.5	9.775	Si
SLU 83	0.73	-38798	-4150.89	38404	23018.22	5.545	Si
SLU 70	0.33	-34678	-2312	34326	22522.66	9.742	Si
SLU 70	0.73	-33735	-3970.32	33393	22344.17	5.628	Si
SLU 80	0.33	-38499	-2387.53	38108	22997.86	9.632	Si
SLU 80	0.73	-37556	-4159.83	37175	22917.66	5.509	Si
SLU 78	0.33	-38729	-2426.36	38336	23013.76	9.485	Si
SLU 78	0.73	-37786	-4213.51	37403	22939.46	5.444	Si
SLU 77	0.33	-38786	-2395.94	38393	23017.5	9.607	Si
SLU 77	0.73	-37844	-4196.42	37460	22944.69	5.468	Si
SLU 79	0.33	-38556	-2357.11	38165	23001.97	9.759	Si
SLU 79	0.73	-37614	-4142.74	37232	22923.24	5.533	Si
SLU 84	0.33	-39683	-2390.05	39280	23064.25	9.65	Si
SLU 84	0.73	-38740	-4167.98	38347	23014.49	5.522	Si
SLU 74	0.33	-38234	-2349.45	37846	22977.76	9.78	Si
SLU 74	0.73	-37291	-4100.34	36913	22890.74	5.583	Si
SLU 76	0.33	-37908	-2361.32	37524	22950.43	9.719	Si
SLU 76	0.73	-36965	-4075.15	36590	22855.02	5.608	Si

Verifica a pressoflessione nel piano secondo D.M. 17-01-18 NTC §7.8.2.2.1 in combinazioni sismiche, γM = 2

Comb.	Quota	N	M	σ0	Mu	c.s.	Verifica
SLV 10	0.33	-12569	-2956.05	12441	12671.85	4.287	Si
SLV 10	0.73	-11889	-791.49	11769	12060.41	15.238	Si
SLV 15	0.33	-25640	-5691.83	25380	22802.98	4.006	Si
SLV 15	0.73	-26076	-462.14	25812	23087.11	49.957	Si
SLV 2	0.33	-26403	2396.9	26135	23298.18	9.72	Si
SLV 2	0.73	-24526	-5236.95	24277	22060.1	4.212	Si
SLV 13	0.33	-18298	-5744.28	18112	17494.85	3.046	Si
SLV 13	0.73	-18566	276.49	18377	17705.52	64.038	Si
SLV 4	0.33	-33746	2449.35	33403	27523.99	11.237	Si
SLV 4	0.73	-32036	-5975.57	31711	26627.62	4.456	Si
SLV 16	0.33	-25640	-5691.83	25380	22802.98	4.006	Si
SLV 16	0.73	-26076	-462.14	25812	23087.11	49.957	Si
SLV 9	0.33	-12569	-2956.05	12441	12671.85	4.287	Si
SLV 9	0.73	-11889	-791.49	11769	12060.41	15.238	Si
SLV 3	0.33	-33746	2449.35	33403	27523.99	11.237	Si
SLV 3	0.73	-32036	-5975.57	31711	26627.62	4.456	Si
SLV 14	0.33	-18298	-5744.28	18112	17494.85	3.046	Si
SLV 14	0.73	-18566	276.49	18377	17705.52	64.038	Si
SLV 1	0.33	-26403	2396.9	26135	23298.18	9.72	Si
SLV 1	0.73	-24526	-5236.95	24277	22060.1	4.212	Si

Verifica a taglio nel piano secondo D.M. 17-01-18 (N.T.C.) §7.8.2.2.2 con rottura per scorrimento in combinazioni non sismiche, γM = 3

Comb.	Quota	N	V par	M	σ0	σN	l'	fvd	Vt scorr.	Vt fess.diag.	Vt,lim	c.s.	Verifica
SLU 71	0.33	-34505	4392	-2242.74		34155	2.245	10110	10213			2.33	Si
SLU 71	0.73	-33562	4392	-3899.55		33222	2.245	9985	10087			2.3	Si
SLU 69	0.33	-34735	4429	-2281.57		34383	2.245	10140	10244			2.31	Si
SLU 69	0.73	-33792	4429	-3953.23		33450	2.245	10015	10118			2.28	Si
SLU 79	0.33	-38556	4714	-2357.11		38165	2.245	10644	10753			2.28	Si
SLU 79	0.73	-37614	4714	-4142.74		37232	2.245	10520	10628			2.25	Si
SLU 70	0.33	-34678	4396	-2312		34326	2.245	10132	10236			2.33	Si
SLU 70	0.73	-33735	4396	-3970.32		33393	2.245	10008	10110			2.3	Si
SLU 77	0.33	-38786	4751	-2395.94		38393	2.245	10675	10784			2.27	Si
SLU 77	0.73	-37844	4751	-4196.42		37460	2.245	10550	10658			2.24	Si
SLU 80	0.33	-38499	4681	-2387.53		38108	2.245	10637	10746			2.3	Si
SLU 80	0.73	-37556	4681	-4159.83		37175	2.245	10512	10620			2.27	Si
SLU 83	0.33	-39740	4728	-2359.63		39337	2.245	10800	10911			2.31	Si
SLU 83	0.73	-38798	4728	-4150.89		38404	2.245	10676	10785			2.28	Si
SLU 78	0.33	-38729	4718	-2426.36		38336	2.245	10667	10776			2.28	Si
SLU 78	0.73	-37786	4718	-4213.51		37403	2.245	10543	10651			2.26	Si
SLU 74	0.33	-38234	4627	-2349.45		37846	2.245	10602	10710			2.31	Si
SLU 74	0.73	-37291	4627	-4100.34		36913	2.245	10477	10585			2.29	Si
SLU 84	0.33	-39683	4695	-2390.05		39280	2.245	10793	10904			2.32	Si
SLU 84	0.73	-38740	4695	-4167.98		38347	2.245	10668	10778			2.3	Si

Verifica a taglio nel piano secondo D.M. 17-01-18 (N.T.C.) §7.8.2.2.2 con rottura per scorrimento in combinazioni sismiche, γM = 2

Comb.	Quota	N	V par	M	σ0	σN	l'	fvd	Vt scorr.	Vt fess.diag.	Vt,lim	c.s.	Verifica
SLV 4	0.33	-33746	16463	2449.35		33403	2.245	15014	15168			0.92	No, Vu<V
SLV 4	0.73	-32036	17885	-5975.57		31711	2.245	14676	14826			0.83	No, Vu<V
SLV 11	0.33	-37043	10827	-2781.23		36668	2.245	15667	15827			1.46	Si
SLV 11	0.73	-36924	13609	-3253.56		36550	2.245	15643	15804			1.16	Si
SLV 3	0.33	-33746	16463	2449.35		33403	2.245	15014	15168			0.92	No, Vu<V
SLV 3	0.73	-32036	17885	-5975.57		31711	2.245	14676	14826			0.83	No, Vu<V
SLV 10	0.33	-12569	-10472	-2956.05		12441	2.245	10822	10932			1.04	Si
SLV 10	0.73	-11889	-13577	-791.49		11769	2.245	10687	10797			0.8	No, Vu<V
SLV 7	0.33	-39475	16869	-338.88		39074	2.245	16148	16314			0.97	No, Vu<V

Comb.	Quota	N	V par	M	σ0	σN	l'	fvd	Vt scorr.	Vt fess.diag.	Vt,lim	c.s.	Verifica
SLV 7	0.73	-38712	19974	-4907.59		38319	2.245	15997	16161			0.81	No, Vu<V
SLV 13	0.33	-18298	-10066	-5744.28		18112	2.245	11956	12078			1.2	Si
SLV 13	0.73	-18566	-11488	276.49		18377	2.245	12009	12132			1.06	Si
SLV 8	0.33	-39475	16869	-338.88		39074	2.245	16148	16314			0.97	No, Vu<V
SLV 8	0.73	-38712	19974	-4907.59		38319	2.245	15997	16161			0.81	No, Vu<V
SLV 9	0.33	-12569	-10472	-2956.05		12441	2.245	10822	10932			1.04	Si
SLV 9	0.73	-11889	-13577	-791.49		11769	2.245	10687	10797			0.8	No, Vu<V
SLV 14	0.33	-18298	-10066	-5744.28		18112	2.245	11956	12078			1.2	Si
SLV 14	0.73	-18566	-11488	276.49		18377	2.245	12009	12132			1.06	Si
SLV 12	0.33	-37043	10827	-2781.23		36668	2.245	15667	15827			1.46	Si
SLV 12	0.73	-36924	13609	-3253.56		36550	2.245	15643	15804			1.16	Si

Verifica a pressoflessione fuori piano D.M. 17-01-18 (N.T.C.)

quota -0.175 Wa 0.08 denominatore 8 γM = 2

Comb.	fd	Sa	σ0	N	M	Mc	Coeff.s.	Verifica
SLV 10	143750	0.24	14823	-14975	171.62	2960.6	17.25	Si
SLV 9	143750	0.24	14823	-14975	171.62	2960.6	17.25	Si
SLV 5	143750	0.24	17055	-17230	171.62	3335.55	19.44	Si
SLV 6	143750	0.24	17055	-17230	171.62	3335.55	19.44	Si
SLV 14	143750	0.24	19867	-20071	171.62	3781.7	22.03	Si
SLV 13	143750	0.24	19867	-20071	171.62	3781.7	22.03	Si
SLV 15	143750	0.24	26423	-26694	171.62	4707.31	27.43	Si
SLV 16	143750	0.24	26423	-26694	171.62	4707.31	27.43	Si
SLV 1	143750	0.24	27307	-27587	171.62	4819.85	28.08	Si
SLV 2	143750	0.24	27307	-27587	171.62	4819.85	28.08	Si

Verifica dei meccanismi locali di collasso con analisi cinematica lineare

forza di aggancio al piano = 0 quota mezzeria = -0.175 Wa = 0.08 Ta = 0.0332

Comb.	N top	N base	V orto	α0	M*	e*	a0*	aLim	Verifica
SLV 10	-16730	-24842	873	0.041	2131.5	0.943	0.63023	3.42705	No
SLV 9	-16730	-24842	873	0.041	2131.5	0.943	0.63023	3.42705	No
SLV 6	-19777	-24992	945	0.042	2440.6	0.95	0.64797	3.42705	No
SLV 5	-19777	-24992	945	0.042	2440.6	0.95	0.64797	3.42705	No
SLV 2	-25618	-28191	917	0.05	3034.1	0.958	0.75995	3.6078	No
SLV 1	-25618	-28191	917	0.05	3034.1	0.958	0.75995	3.6078	No
SLV 14	-15462	-27691	675	0.049	2003	0.94	0.76299	3.6078	No
SLV 13	-15462	-27691	675	0.049	2003	0.94	0.76299	3.6078	No
SLV 3	-27578	-30783	820	0.055	3233.4	0.961	0.83095	3.6078	No
SLV 4	-27578	-30783	820	0.055	3233.4	0.961	0.83095	3.6078	No

Tabella dei coefficienti di sicurezza minimi

Stato limite	Coeff.s.	Comb.	Verifica
PF_SLU	5.444	SLU 78	Si
V_SLU	2.243	SLU 77	Si
PF_SLV	3.046	SLV 13	Si
V_SLV	0.795	SLV 9	No
PFFP_SLV	17.25	SLV 9	Si
R_SLV	0.184	SLV 9	No

Maschio 4

Verifiche condotte secondo D.M. 17-01-18 (N.T.C.)

Dati geometrici

X ini.	Y ini.	X fin.	Y fin.	Quota i.	Quota.s	l	Sp.	h netta	h ini.	h fin.	a	a.s.,sx	a.s.,dx
-19.693	5.865	-19.693	6.565	L1	L3	0.7	0.45	2.99	2.99	2.99			

Caratteristiche del materiale

(Circolare 7 21-01-19 C8.5.I) Muratura in mattoni pieni e malta di calce LC2_Corti

fb	fk	fvk0	fmedio	τ0	fv0	μ	ϕ	fv,lim	E	G	FC
600000			345000	9000	20000	0.58	0.77	32500	320000000	128000000	1.2

Verifica a pressoflessione nel piano secondo D.M. 17-01-18 NTC §7.8.2.2.1 in combinazioni non sismiche, γM = 3

Comb.	Quota	N	M	σ0	Mu	c.s.	Verifica
SLU 82	-1.67	-20181	221.27	64052	1509.73	6.823	Si
SLU 82	1.32	-27004	-1371.84	85704	0	0	No, Rottura per schiacciamento
SLU 74	-1.67	-19801	216.05	62846	1583.94	7.331	Si
SLU 74	1.32	-26621	-1355.81	84490	0	0	No, Rottura per schiacciamento
SLU 78	-1.67	-20079	222.94	63726	1530.19	6.864	Si
SLU 78	1.32	-27071	-1375.97	85918	0	0	No, Rottura per schiacciamento
SLU 80	-1.67	-19950	221.66	63319	1555.31	7.017	Si
SLU 80	1.32	-26864	-1365.57	85263	0	0	No, Rottura per schiacciamento
SLU 79	-1.67	-19947	219.2	63309	1555.92	7.098	Si
SLU 79	1.32	-26879	-1369.62	85309	0	0	No, Rottura per schiacciamento
SLU 81	-1.67	-20178	218.8	64042	1510.35	6.903	Si
SLU 81	1.32	-27018	-1375.9	85750	0	0	No, Rottura per schiacciamento
SLU 84	-1.67	-20455	225.7	64922	1453.75	6.441	Si
SLU 84	1.32	-27468	-1396.06	87179	0	0	No, Rottura per schiacciamento
SLU 77	-1.67	-20075	220.48	63716	1530.8	6.943	Si

Comb.	Quota	N	M	σ0	Mu	c.s.	Verifica
SLU 77	1.32	-27085	-1380.02	85964	0	0	No, Rottura per schiacciamento
SLU 75	-1.67	-19804	218.51	62856	1583.35	7.246	Si
SLU 75	1.32	-26606	-1351.76	84444	0	0	No, Rottura per schiacciamento
SLU 76	-1.67	-19678	218.88	62455	1607.13	7.343	Si
SLU 76	1.32	-26390	-1338.65	83758	0	0	No, Rottura per schiacciamento

Verifica a pressoflessione nel piano secondo D.M. 17-01-18 NTC §7.8.2.2.1 in combinazioni sismiche, γM = 2

Comb.	Quota	N	M	σ0	Mu	c.s.	Verifica
SLV 7	-1.67	-18345	2173.56	58224	3362.02	1.547	Si
SLV 7	1.32	-27690	-1046.02	87885	2721.5	2.602	Si
SLV 6	-1.67	-9330	-2455.05	29612	2474.72	1.008	Si
SLV 6	1.32	-9254	-195.26	29370	2460.92	12.603	Si
SLV 12	-1.67	-17989	2750.67	57094	3355	1.22	Si
SLV 12	1.32	-27165	-1657.1	86216	2799.72	1.69	Si
SLV 10	-1.67	-8974	-1877.94	28481	2409.3	1.283	Si
SLV 10	1.32	-8728	-806.34	27701	2362.81	2.93	Si
SLV 11	-1.67	-17989	2750.67	57094	3355	1.22	Si
SLV 11	1.32	-27165	-1657.1	86216	2799.72	1.69	Si
SLV 16	-1.67	-14418	1803.95	45760	3157.19	1.75	Si
SLV 16	1.32	-20098	-2072.26	63788	3362.89	1.623	Si
SLV 15	-1.67	-14418	1803.95	45760	3157.19	1.75	Si
SLV 15	1.32	-20098	-2072.26	63788	3362.89	1.623	Si
SLV 5	-1.67	-9330	-2455.05	29612	2474.72	1.008	Si
SLV 5	1.32	-9254	-195.26	29370	2460.92	12.603	Si
SLV 9	-1.67	-8974	-1877.94	28481	2409.3	1.283	Si
SLV 9	1.32	-8728	-806.34	27701	2362.81	2.93	Si
SLV 8	-1.67	-18345	2173.56	58224	3362.02	1.547	Si
SLV 8	1.32	-27690	-1046.02	87885	2721.5	2.602	Si

Verifica a taglio nel piano secondo D.M. 17-01-18 (N.T.C.) §7.8.2.2.2 con rottura per scorrimento in combinazioni non sismiche, γM = 3

Comb.	Quota	N	V par	M	σ0	σN	I'	fvd	Vt scorr.	Vt fess.diag.	Vt,lim	c.s.	Verifica
SLU 78	-1.67	-20079	-45	222.94		63726	0.7002	10833	3413			76.13	Si
SLU 78	1.32	-27071	3726	-1375.97		85918	0.7002	10833	3413			0.92	No, Vu<V
SLU 82	-1.67	-20181	-49	221.27		64052	0.7002	10833	3413			69.17	Si
SLU 82	1.32	-27004	3697	-1371.84		85704	0.7002	10833	3413			0.92	No, Vu<V
SLU 74	-1.67	-19801	-51	216.05		62846	0.7002	10833	3413			66.64	Si
SLU 74	1.32	-26621	3665	-1355.81		84490	0.7002	10833	3413			0.93	No, Vu<V
SLU 84	-1.67	-20455	-49	225.7		64922	0.7002	10833	3413			69.49	Si
SLU 84	1.32	-27468	3764	-1396.06		87179	0.7002	10833	3413			0.91	No, Vu<V
SLU 81	-1.67	-20178	-56	218.8		64042	0.7002	10833	3413			61.5	Si
SLU 81	1.32	-27018	3703	-1375.9		85750	0.7002	10833	3413			0.92	No, Vu<V
SLU 80	-1.67	-19950	-44	221.66		63319	0.7002	10833	3413			77.49	Si
SLU 80	1.32	-26864	3698	-1365.57		85263	0.7002	10833	3413			0.92	No, Vu<V
SLU 83	-1.67	-20452	-55	223.23		64912	0.7002	10833	3413			61.75	Si
SLU 83	1.32	-27482	3770	-1400.11		87225	0.7002	10833	3413			0.91	No, Vu<V
SLU 77	-1.67	-20075	-51	220.48		63716	0.7002	10833	3413			66.94	Si
SLU 77	1.32	-27085	3731	-1380.02		85964	0.7002	10833	3413			0.91	No, Vu<V
SLU 79	-1.67	-19947	-50	219.2		63309	0.7002	10833	3413			67.98	Si
SLU 79	1.32	-26879	3704	-1369.62		85309	0.7002	10833	3413			0.92	No, Vu<V
SLU 75	-1.67	-19804	-45	218.51		62856	0.7002	10833	3413			75.75	Si
SLU 75	1.32	-26606	3659	-1351.76		84444	0.7002	10833	3413			0.93	No, Vu<V

Verifica a taglio nel piano secondo D.M. 17-01-18 (N.T.C.) §7.8.2.2.2 con rottura per scorrimento in combinazioni sismiche, γM = 2

Comb.	Quota	N	V par	M	σ0	σN	I'	fvd	Vt scorr.	Vt fess.diag.	Vt,lim	c.s.	Verifica
SLV 6	-1.67	-9330	-4461	-2455.05		79484	0.2608	16250	1907			0.43	No, Vu<V
SLV 6	1.32	-9254	-9104	-195.26		29370	0.7002	14207	4476			0.49	No, Vu<V
SLV 16	-1.67	-14418	2773	1803.95		47473	0.6749	16250	4935			1.78	Si
SLV 16	1.32	-20098	8889	-2072.26		63788	0.7002	16250	5120			0.58	No, Vu<V
SLV 12	-1.67	-17989	4396	2750.67		67579	0.5915	16250	4326			0.98	No, Vu<V
SLV 12	1.32	-27165	14155	-1657.1		86216	0.7002	16250	5120			0.36	No, Vu<V
SLV 11	-1.67	-17989	4396	2750.67		67579	0.5915	16250	4326			0.98	No, Vu<V
SLV 11	1.32	-27165	14155	-1657.1		86216	0.7002	16250	5120			0.36	No, Vu<V
SLV 8	-1.67	-18345	3423	2173.56		58673	0.6948	16250	5081			1.48	Si
SLV 8	1.32	-27690	12259	-1046.02		87885	0.7002	16250	5120			0.42	No, Vu<V
SLV 5	-1.67	-9330	-4461	-2455.05		79484	0.2608	16250	1907			0.43	No, Vu<V
SLV 5	1.32	-9254	-9104	-195.26		29370	0.7002	14207	4476			0.49	No, Vu<V
SLV 9	-1.67	-8974	-3488	-1877.94		47205	0.4224	16250	3089			0.89	No, Vu<V
SLV 9	1.32	-8728	-7208	-806.34		27701	0.7002	13874	4371			0.61	No, Vu<V
SLV 10	-1.67	-8974	-3488	-1877.94		47205	0.4224	16250	3089			0.89	No, Vu<V
SLV 10	1.32	-8728	-7208	-806.34		27701	0.7002	13874	4371			0.61	No, Vu<V
SLV 15	-1.67	-14418	2773	1803.95		47473	0.6749	16250	4935			1.78	Si
SLV 15	1.32	-20098	8889	-2072.26		63788	0.7002	16250	5120			0.58	No, Vu<V
SLV 7	-1.67	-18345	3423	2173.56		58673	0.6948	16250	5081			1.48	Si
SLV 7	1.32	-27690	12259	-1046.02		87885	0.7002	16250	5120			0.42	No, Vu<V

Verifica a pressoflessione fuori piano D.M. 17-01-18 (N.T.C.)

quota -0.175 Wa 0.08 denominatore 8 γM = 2

Comb.	fd	Sa	σ0	N	M	Mc	Coeff.s.	Verifica
SLV 10	143750	0.24	16965	-5345	51.61	1035.71	20.07	Si
SLV 9	143750	0.24	16965	-5345	51.61	1035.71	20.07	Si
SLV 6	143750	0.24	19168	-6040	51.61	1145.72	22.2	Si
SLV 5	143750	0.24	19168	-6040	51.61	1145.72	22.2	Si
SLV 14	143750	0.24	31369	-9884	51.61	1652.89	32.02	Si
SLV 13	143750	0.24	31369	-9884	51.61	1652.89	32.02	Si
SLV 2	143750	0.24	38713	-12198	51.61	1874.92	36.33	Si
SLV 1	143750	0.24	38713	-12198	51.61	1874.92	36.33	Si

Comb.	fd	Sa	σ0	N	M	Mc	Coeff.s.	Verifica
SLV 15	143750	0.24	45918	-14468	51.61	2031.91	39.37	Si
SLV 16	143750	0.24	45918	-14468	51.61	2031.91	39.37	Si

Verifica dei meccanismi locali di collasso con analisi cinematica lineare

forza di aggancio al piano = 0 quota mezzeria = -0.175 Wa = 0.08 Ta = 0.0332

Comb.	N top	N base	V orto	α0	M*	e*	a0*	aLim	Verifica
SLV 6	-9254	-9330	239	0.058	1074.8	0.963	0.87469	3.42705	No
SLV 5	-9254	-9330	239	0.058	1074.8	0.963	0.87469	3.42705	No
SLV 10	-8728	-8974	230	0.058	1021.3	0.961	0.87495	3.42705	No
SLV 9	-8728	-8974	230	0.058	1021.3	0.961	0.87495	3.42705	No
SLV 1	-16320	-12901	239	0.065	1794.4	0.977	0.96725	3.6078	No
SLV 2	-16320	-12901	239	0.065	1794.4	0.977	0.96725	3.6078	No
SLV 13	-14567	-11713	212	0.066	1615.8	0.975	0.97886	3.6078	No
SLV 14	-14567	-11713	212	0.066	1615.8	0.975	0.97886	3.6078	No
SLV 4	-21851	-15605	232	0.068	2357.9	0.982	1.00383	3.6078	No
SLV 3	-21851	-15605	232	0.068	2357.9	0.982	1.00383	3.6078	No

Tabella dei coefficienti di sicurezza minimi

Stato limite	Coeff.s.	Comb.	Verifica
PF_SLU	0	SLU 73	No
V_SLU	0.906	SLU 83	No
PF_SLV	1.008	SLV 5	Si
V_SLV	0.362	SLV 11	No
PFFP_SLV	20.066	SLV 9	Si
R_SLV	0.255	SLV 5	No

Maschio 5

Verifiche condotte secondo D.M. 17-01-18 (N.T.C.)

Dati geometrici

X ini.	Y ini.	X fin.	Y fin.	Quota i.	Quota.s	l	Sp.	h netta	h ini.	h fin.	a	a.s.,sx	a.s.,dx
-19.618	2.071	-19.618	4.851	L1	L3	2.78	0.3	2.99	2.99	2.99			

Caratteristiche del materiale

(Circolare 7 21-01-19 C8.5.I) Muratura in mattoni pieni e malta di calce LC2_Corti

fb	fk	fvk0	fmedio	τ0	fv0	μ	ϕ	fv,lim	E	G	FC
600000			345000	9000	20000	0.58	0.77	32500	320000000	128000000	1.2

Verifica a pressoflessione nel piano secondo D.M. 17-01-18 NTC §7.8.2.2.1 in combinazioni non sismiche, γM = 3

Comb.	Quota	N	M	σ0	Mu	c.s.	Verifica
SLU 81	-1.67	-31133	2912.21	37329	23443.33	8.05	Si
SLU 81	0.33	-27097	-1829.45	32491	22641.99	12.376	Si
SLU 83	-1.67	-31556	2978.01	37837	23488.84	7.887	Si
SLU 83	0.33	-27521	-1873.22	32999	22757.49	12.149	Si
SLU 79	-1.67	-30932	2911.63	37089	23419.23	8.043	Si
SLU 79	0.33	-26897	-1834.64	32250	22584.77	12.31	Si
SLU 78	-1.67	-31030	2991.34	37207	23431.27	7.833	Si
SLU 78	0.33	-26995	-1813.04	32369	22613.07	12.472	Si
SLU 75	-1.67	-30607	2925.54	36699	23376.64	7.991	Si
SLU 75	0.33	-26571	-1769.28	31860	22488.45	12.71	Si
SLU 84	-1.67	-31460	3038.09	37722	23479.12	7.728	Si
SLU 84	0.33	-27425	-1835.22	32883	22731.82	12.386	Si
SLU 82	-1.67	-31036	2972.28	37213	23431.94	7.883	Si
SLU 82	0.33	-27001	-1791.46	32375	22614.65	12.624	Si
SLU 77	-1.67	-31127	2931.27	37323	23442.69	7.997	Si
SLU 77	0.33	-27092	-1851.04	32484	22640.44	12.231	Si
SLU 80	-1.67	-30835	2971.71	36973	23407.04	7.877	Si
SLU 80	0.33	-26800	-1796.64	32135	22556.63	12.555	Si
SLU 76	-1.67	-30347	2945.96	36387	23339.57	7.923	Si
SLU 76	0.33	-26312	-1727.55	31549	22408.54	12.971	Si

Verifica a pressoflessione nel piano secondo D.M. 17-01-18 NTC §7.8.2.2.1 in combinazioni sismiche, γM = 2

Comb.	Quota	N	M	σ0	Mu	c.s.	Verifica
SLV 16	-1.67	-11167	8601.24	13390	13821.56	1.607	Si
SLV 16	0.33	-10423	2782	12497	13005.93	4.675	Si
SLV 12	-1.67	-13612	26753.81	0	0	0	No, e>l/2
SLV 12	0.33	-11156	-966.41	13377	13809.71	14.29	Si
SLV 15	-1.67	-11167	8601.24	13390	13821.56	1.607	Si
SLV 15	0.33	-10423	2782	12497	13005.93	4.675	Si
SLV 7	-1.67	-18830	27262.45	0	0	0	No, e>l/2
SLV 7	0.33	-14948	-3549.5	17923	17729.56	4.995	Si
SLV 11	-1.67	-13612	26753.81	0	0	0	No, e>l/2
SLV 11	0.33	-11156	-966.41	13377	13809.71	14.29	Si
SLV 8	-1.67	-18830	27262.45	0	0	0	No, e>l/2
SLV 8	0.33	-14948	-3549.5	17923	17729.56	4.995	Si
SLV 10	-1.67	-24023	-23415.18	28805	25520.22	1.09	Si
SLV 10	0.33	-21698	1133.03	26017	23738.17	20.951	Si
SLV 5	-1.67	-29242	-22906.53	35062	28982.48	1.265	Si
SLV 5	0.33	-25489	-1450.07	30562	26567.78	18.322	Si
SLV 6	-1.67	-29242	-22906.53	35062	28982.48	1.265	Si
SLV 6	0.33	-25489	-1450.07	30562	26567.78	18.322	Si
SLV 9	-1.67	-24023	-23415.18	28805	25520.22	1.09	Si
SLV 9	0.33	-21698	1133.03	26017	23738.17	20.951	Si

Verifica a taglio nel piano secondo D.M. 17-01-18 (N.T.C.) §7.8.2.2.2 con rottura per scorrimento in combinazioni non sismiche, γM = 3

Comb.	Quota	N	V par	M	σ0	σN	l'	fvd	Vt scorr.	Vt fess.diag.	Vt,lim	c.s.	Verifica
SLU 82	-1.67	-31036	2382	2972.28		37213	2.78	10517	8771			3.68	Si
SLU 82	0.33	-27001	2382	-1791.46		32375	2.78	9872	8233			3.46	Si
SLU 77	-1.67	-31127	2391	2931.27		37323	2.78	10532	8784			3.67	Si
SLU 77	0.33	-27092	2391	-1851.04		32484	2.78	9887	8246			3.45	Si
SLU 84	-1.67	-31460	2436	3038.09		37722	2.78	10585	8828			3.62	Si
SLU 84	0.33	-27425	2436	-1835.22		32883	2.78	9940	8290			3.4	Si
SLU 79	-1.67	-30932	2373	2911.63		37089	2.78	10501	8758			3.69	Si
SLU 79	0.33	-26897	2373	-1834.64		32250	2.78	9856	8220			3.46	Si
SLU 83	-1.67	-31556	2425	2978.01		37837	2.78	10601	8841			3.65	Si
SLU 83	0.33	-27521	2425	-1873.22		32999	2.78	9955	8303			3.42	Si
SLU 78	-1.67	-31030	2402	2991.34		37207	2.78	10516	8771			3.65	Si
SLU 78	0.33	-26995	2402	-1813.04		32369	2.78	9871	8233			3.43	Si
SLU 81	-1.67	-31133	2371	2912.21		37329	2.78	10533	8784			3.71	Si
SLU 81	0.33	-27097	2371	-1829.45		32491	2.78	9888	8246			3.48	Si
SLU 80	-1.67	-30835	2384	2971.71		36973	2.78	10485	8745			3.67	Si
SLU 80	0.33	-26800	2384	-1796.64		32135	2.78	9840	8207			3.44	Si
SLU 75	-1.67	-30607	2347	2925.54		36699	2.78	10449	8714			3.71	Si
SLU 75	0.33	-26571	2347	-1769.28		31860	2.78	9804	8176			3.48	Si
SLU 76	-1.67	-30347	2336	2945.96		36387	2.78	10407	8680			3.71	Si
SLU 76	0.33	-26312	2336	-1727.55		31549	2.78	9762	8142			3.48	Si

Verifica a taglio nel piano secondo D.M. 17-01-18 (N.T.C.) §7.8.2.2.2 con rottura per scorrimento in combinazioni sismiche, γM = 2

Comb.	Quota	N	V par	M	σ0	σN	l'	fvd	Vt scorr.	Vt fess.diag.	Vt,lim	c.s.	Verifica
SLV 6	-1.67	-29242	-10522	-22906.53		53558	1.8199	16250	8872			0.84	No, Vu<V
SLV 6	0.33	-25489	-10904	-1450.07		30562	2.78	14446	12048			1.1	Si
SLV 5	-1.67	-29242	-10522	-22906.53		53558	1.8199	16250	8872			0.84	No, Vu<V
SLV 5	0.33	-25489	-10904	-1450.07		30562	2.78	14446	12048			1.1	Si
SLV 9	-1.67	-24023	-12560	-23415.18		64271	1.2459	16250	6074			0.48	No, Vu<V
SLV 9	0.33	-21698	-12860	1133.03		26017	2.78	13537	11290			0.88	No, Vu<V
SLV 7	-1.67	-18830	15691	27262.45		0	0	8333	0			0	No, Vu<V
SLV 7	0.33	-14948	15991	-3549.5		17923	2.78	11918	9940			0.62	No, Vu<V
SLV 11	-1.67	-13612	13654	26753.81		0	0	8333	0			0	No, Vu<V
SLV 11	0.33	-11156	14036	-966.41		13377	2.78	11009	9181			0.65	No, Vu<V
SLV 3	-1.67	-28562	8894	10296.73		34247	2.78	15183	12662			1.42	Si
SLV 3	0.33	-23060	8859	-5828.31		27650	2.78	13863	11562			1.31	Si
SLV 10	-1.67	-24023	-12560	-23415.18		64271	1.2459	16250	6074			0.48	No, Vu<V
SLV 10	0.33	-21698	-12860	1133.03		26017	2.78	13537	11290			0.88	No, Vu<V
SLV 4	-1.67	-28562	8894	10296.73		34247	2.78	15183	12662			1.42	Si
SLV 4	0.33	-23060	8859	-5828.31		27650	2.78	13863	11562			1.31	Si
SLV 8	-1.67	-18830	15691	27262.45		0	0	8333	0			0	No, Vu<V
SLV 8	0.33	-14948	15991	-3549.5		17923	2.78	11918	9940			0.62	No, Vu<V
SLV 12	-1.67	-13612	13654	26753.81		0	0	8333	0			0	No, Vu<V
SLV 12	0.33	-11156	14036	-966.41		13377	2.78	11009	9181			0.65	No, Vu<V

Verifica a pressoflessione fuori piano D.M. 17-01-18 (N.T.C.)

quota -0.175 Wa 0.05 denominatore 8 γM = 2

Comb.	fd	Sa	σ0	N	M	Mc	Coeff.s.	Verifica
SLV 16	143750	0.24	13163	-10978	136.62	1469.26	10.75	Si
SLV 15	143750	0.24	13163	-10978	136.62	1469.26	10.75	Si
SLV 11	143750	0.24	13671	-11402	136.62	1518.91	11.12	Si
SLV 12	143750	0.24	13671	-11402	136.62	1518.91	11.12	Si
SLV 14	143750	0.24	17247	-14384	136.62	1853.03	13.56	Si
SLV 13	143750	0.24	17247	-14384	136.62	1853.03	13.56	Si
SLV 7	143750	0.24	18191	-15172	136.62	1936.93	14.18	Si
SLV 8	143750	0.24	18191	-15172	136.62	1936.93	14.18	Si
SLV 9	143750	0.24	27285	-22756	136.62	2651.15	19.41	Si
SLV 10	143750	0.24	27285	-22756	136.62	2651.15	19.41	Si

Verifica dei meccanismi locali di collasso con analisi cinematica lineare

forza di aggancio al piano = 0 quota mezzeria = -0.175 Wa = 0.05 Ta = 0.0498

Comb.	N top	N base	V orto	α0	M*	e*	a0*	aLim	Verifica
SLV 14	-5563	-14291	406	0.013	929.4	0.907	0.20082	4.54426	No
SLV 13	-5563	-14291	406	0.013	929.4	0.907	0.20082	4.54426	No
SLV 15	-5311	-11167	383	0.014	904.5	0.905	0.23079	4.54426	No
SLV 16	-5311	-11167	383	0.014	904.5	0.905	0.23079	4.54426	No
SLV 9	-10159	-24023	330	0.033	1390.1	0.931	0.50926	4.18901	No
SLV 10	-10159	-24023	330	0.033	1390.1	0.931	0.50926	4.18901	No
SLV 12	-9320	-13612	252	0.038	1305.5	0.927	0.597	4.18901	No
SLV 11	-9320	-13612	252	0.038	1305.5	0.927	0.597	4.18901	No
SLV 6	-13847	-29242	241	0.042	1763.3	0.943	0.64947	4.18901	No
SLV 5	-13847	-29242	241	0.042	1763.3	0.943	0.64947	4.18901	No

Tabella dei coefficienti di sicurezza minimi

Stato limite	Coeff.s.	Comb.	Verifica
PF_SLU	7.728	SLU 84	Si
V_SLU	3.403	SLU 84	Si
PF_SLV	0	SLV 7	No
V_SLV	0	SLV 7	No
PFFP_SLV	10.754	SLV 15	Si
R_SLV	0.044	SLV 13	No

Maschio 6

Verifiche condotte secondo D.M. 17-01-18 (N.T.C.)

Dati geometrici

X ini.	Y ini.	X fin.	Y fin.	Quota i.	Quota.s	l	Sp.	h netta	h ini.	h fin.	a	a.s.,sx	a.s.,dx
-19.618	5.651	-19.618	6.09	L1	L3	0.439	0.3	2.99	2.99	2.99			

Caratteristiche del materiale

(Circolare 7 21-01-19 C8.5.I) Muratura in mattoni pieni e malta di calce LC2_Corti

fb	fk	fvk0	fmedio	τ0	fv0	μ	ϕ	fv,lim	E	G	FC
600000			345000	9000	20000	0.58	0.77	32500	320000000	128000000	1.2

Verifica a pressoflessione nel piano secondo D.M. 17-01-18 NTC §7.8.2.2.1 in combinazioni non sismiche, γM = 3

Comb.	Quota	N	M	σ0	Mu	c.s.	Verifica
SLU 82	-1.67	-7907	42.85	60089	454.86	10.615	Si
SLU 82	0.33	-8678	-64.46	65951	362.29	5.621	Si
SLU 77	-1.67	-7864	43.86	59764	459.28	10.472	Si
SLU 77	0.33	-8676	-65.74	65934	362.59	5.515	Si
SLU 79	-1.67	-7813	43.54	59379	464.42	10.667	Si
SLU 79	0.33	-8613	-65.33	65459	370.99	5.679	Si
SLU 83	-1.67	-8012	43.6	60889	443.66	10.176	Si
SLU 83	0.33	-8816	-65.13	67001	343.14	5.269	Si
SLU 81	-1.67	-7908	42.34	60098	454.74	10.741	Si
SLU 81	0.33	-8677	-63.49	65947	362.36	5.707	Si
SLU 84	-1.67	-8011	44.11	60880	443.78	10.062	Si
SLU 84	0.33	-8817	-66.09	67005	343.06	5.191	Si
SLU 75	-1.67	-7758	43.11	58964	469.85	10.898	Si
SLU 75	0.33	-8537	-65.07	64884	380.95	5.854	Si
SLU 80	-1.67	-7812	44.05	59370	464.54	10.546	Si
SLU 80	0.33	-8614	-66.29	65463	370.92	5.595	Si
SLU 78	-1.67	-7863	44.37	59755	459.4	10.354	Si
SLU 78	0.33	-8676	-66.7	65938	362.51	5.435	Si
SLU 74	-1.67	-7760	42.6	58973	469.73	11.026	Si
SLU 74	0.33	-8537	-64.11	64880	381.02	5.943	Si

Verifica a pressoflessione nel piano secondo D.M. 17-01-18 NTC §7.8.2.2.1 in combinazioni sismiche, γM = 2

Comb.	Quota	N	M	σ0	Mu	c.s.	Verifica
SLV 12	-1.67	-5247	735.19	39873	775.1	1.054	Si
SLV 12	0.33	-10055	-361.65	76420	825.97	2.284	Si
SLV 9	-1.67	-6475	-678.44	49209	848.09	1.25	Si
SLV 9	0.33	-1408	527.66	0	0	0	No, e>l/2
SLV 7	-1.67	-4243	736.93	32243	684.88	0.929	No, M>Mu
SLV 7	0.33	-10300	-618.11	78280	811.69	1.313	Si
SLV 13	-1.67	-7216	-185.71	54843	872.22	4.697	Si
SLV 13	0.33	-4149	515.6	31533	675.08	1.309	Si
SLV 6	-1.67	-5471	-676.7	41580	791.52	1.17	Si
SLV 6	0.33	-1653	271.2	12560	325.18	1.199	Si
SLV 10	-1.67	-6475	-678.44	49209	848.09	1.25	Si
SLV 10	0.33	-1408	527.66	0	0	0	No, e>l/2
SLV 11	-1.67	-5247	735.19	39873	775.1	1.054	Si
SLV 11	0.33	-10055	-361.65	76420	825.97	2.284	Si
SLV 14	-1.67	-7216	-185.71	54843	872.22	4.697	Si
SLV 14	0.33	-4149	515.6	31533	675.08	1.309	Si
SLV 5	-1.67	-5471	-676.7	41580	791.52	1.17	Si
SLV 5	0.33	-1653	271.2	12560	325.18	1.199	Si
SLV 8	-1.67	-4243	736.93	32243	684.88	0.929	No, M>Mu
SLV 8	0.33	-10300	-618.11	78280	811.69	1.313	Si

Verifica a taglio nel piano secondo D.M. 17-01-18 (N.T.C.) §7.8.2.2.2 con rottura per scorrimento in combinazioni non sismiche, γM = 3

Comb.	Quota	N	V par	M	σ0	σN	l'	fvd	Vt scorr.	Vt fess.diag.	Vt,lim	c.s.	Verifica
SLU 80	-1.67	-7812	-12	44.05		59370	0.4386	10833	1425			122.12	Si
SLU 80	0.33	-8614	60	-66.29		65463	0.4386	10833	1425			23.9	Si
SLU 70	-1.67	-7156	-8	41.3		54385	0.4386	10833	1425			180.55	Si
SLU 70	0.33	-7879	60	-63.36		59881	0.4386	10833	1425			23.6	Si
SLU 49	-1.67	-6476	-6	37.54		49216	0.4386	10833	1425			227.82	Si
SLU 49	0.33	-7094	59	-59.3		53910	0.4386	10833	1425			24.22	Si
SLU 47	-1.67	-6320	-7	36.3		48034	0.4386	10833	1425			200.06	Si
SLU 47	0.33	-6893	58	-57.9		52384	0.4386	10833	1425			24.53	Si
SLU 57	-1.67	-7182	-10	40.62		54586	0.4386	10833	1425			143.15	Si
SLU 57	0.33	-7891	59	-62.65		59968	0.4386	10833	1425			24.34	Si
SLU 72	-1.67	-7105	-8	40.98		54000	0.4386	10833	1425			178.8	Si
SLU 72	0.33	-7817	60	-62.94		59406	0.4386	10833	1425			23.78	Si
SLU 76	-1.67	-7707	-12	43.13		58573	0.4386	10833	1425			114.36	Si
SLU 76	0.33	-8475	59	-65.3		64412	0.4386	10833	1425			24.02	Si
SLU 78	-1.67	-7863	-12	44.37		59755	0.4386	10833	1425			122.93	Si
SLU 78	0.33	-8676	60	-66.7		65938	0.4386	10833	1425			23.72	Si
SLU 68	-1.67	-7000	-9	40.06		53203	0.4386	10833	1425			162.66	Si
SLU 68	0.33	-7678	60	-61.95		58354	0.4386	10833	1425			23.89	Si
SLU 51	-1.67	-6425	-6	37.22		48831	0.4386	10833	1425			225.04	Si
SLU 51	0.33	-7031	58	-58.89		53435	0.4386	10833	1425			24.4	Si

Verifica a taglio nel piano secondo D.M. 17-01-18 (N.T.C.) §7.8.2.2.2 con rottura per scorrimento in combinazioni sismiche, γM = 2

Comb.	Quota	N	V par	M	σ0	σN	l'	fvd	Vt scorr.	Vt fess.diag.	Vt,lim	c.s.	Verifica
SLV 8	-1.67	-4243	755	736.93		103374	0.1368	16250	667			0.88	No, Vu<V
SLV 8	0.33	-10300	1567	-618.11		78280	0.4386	16250	2138			1.36	Si
SLV 10	-1.67	-6475	-773	-678.44		62822	0.3436	16250	1675			2.17	Si
SLV 10	0.33	-1408	-1488	527.66		0	0	8333	0			0	No, Vu<V
SLV 5	-1.67	-5471	-739	-676.7		63579	0.2868	16250	1398			1.89	Si
SLV 5	0.33	-1653	-1245	271.2		33263	0.1656	14986	745			0.6	No, Vu<V
SLV 9	-1.67	-6475	-773	-678.44		62822	0.3436	16250	1675			2.17	Si
SLV 9	0.33	-1408	-1488	527.66		0	0	8333	0			0	No, Vu<V
SLV 11	-1.67	-5247	721	735.19		73631	0.2375	16250	1158			1.61	Si

Comb.	Quota	N	V par	M	σ0	σN	l'	fvd	Vt scorr.	Vt fess.diag.	Vt,lim	c.s.	Verifica
SLV 11	0.33	-10055	1323	-361.65		76420	0.4386	16250	2138			1.62	Si
SLV 13	-1.67	-7216	-289	-185.71		54843	0.4386	16250	2138			7.39	Si
SLV 13	0.33	-4149	-788	515.6		48511	0.2851	16250	1390			1.76	Si
SLV 6	-1.67	-5471	-739	-676.7		63579	0.2868	16250	1398			1.89	Si
SLV 6	0.33	-1653	-1245	271.2		33263	0.1656	14986	745			0.6	No, Vu<V
SLV 12	-1.67	-5247	721	735.19		73631	0.2375	16250	1158			1.61	Si
SLV 12	0.33	-10055	1323	-361.65		76420	0.4386	16250	2138			1.62	Si
SLV 14	-1.67	-7216	-289	-185.71		54843	0.4386	16250	2138			7.39	Si
SLV 14	0.33	-4149	-788	515.6		48511	0.2851	16250	1390			1.76	Si
SLV 7	-1.67	-4243	755	736.93		103374	0.1368	16250	667			0.88	No, Vu<V
SLV 7	0.33	-10300	1567	-618.11		78280	0.4386	16250	2138			1.36	Si

Verifica a pressoflessione fuori piano D.M. 17-01-18 (N.T.C.)

quota -0.175 Wa 0.05 denominatore 8 γM = 2

Comb.	fd	Sa	σ0	N	M	Mc	Coeff.s.	Verifica
SLV 5	143750	0.24	16377	-2155	21.55	279.91	12.99	Si
SLV 6	143750	0.24	16377	-2155	21.55	279.91	12.99	Si
SLV 2	143750	0.24	22619	-2976	21.55	363.79	16.88	Si
SLV 1	143750	0.24	22619	-2976	21.55	363.79	16.88	Si
SLV 9	143750	0.24	24089	-3170	21.55	381.71	17.71	Si
SLV 10	143750	0.24	24089	-3170	21.55	381.71	17.71	Si
SLV 4	143750	0.24	35681	-4695	21.55	498.59	23.13	Si
SLV 3	143750	0.24	35681	-4695	21.55	498.59	23.13	Si
SLV 13	143750	0.24	48326	-6359	21.55	576.57	26.75	Si
SLV 14	143750	0.24	48326	-6359	21.55	576.57	26.75	Si

Verifica dei meccanismi locali di collasso con analisi cinematica lineare

forza di aggancio al piano = 0 quota mezzeria = -0.175 Wa = 0.05 Ta = 0.0498

Comb.	N top	N base	V orto	α0	M*	e*	a0*	aLim	Verifica
SLV 9	-2504	-6475	72	0.031	310.6	0.949	0.48007	4.18901	No
SLV 10	-2504	-6475	72	0.031	310.6	0.949	0.48007	4.18901	No
SLV 5	-1942	-5471	60	0.032	253.6	0.939	0.49211	4.18901	No
SLV 6	-1942	-5471	60	0.032	253.6	0.939	0.49211	4.18901	No
SLV 14	-5356	-7216	81	0.039	600.7	0.972	0.58553	4.54426	No
SLV 13	-5356	-7216	81	0.039	600.7	0.972	0.58553	4.54426	No
SLV 16	-7238	-6848	77	0.042	792.4	0.978	0.62976	4.54426	No
SLV 15	-7238	-6848	77	0.042	792.4	0.978	0.62976	4.54426	No
SLV 1	-3482	-3870	42	0.044	409.9	0.96	0.66443	4.54426	No
SLV 2	-3482	-3870	42	0.044	409.9	0.96	0.66443	4.54426	No

Tabella dei coefficienti di sicurezza minimi

Stato limite	Coeff.s.	Comb.	Verifica
PF_SLU	5.191	SLU 84	Si
V_SLU	23.6	SLU 70	Si
PF_SLV	0	SLV 9	No
V_SLV	0	SLV 9	No
PFFP_SLV	12.986	SLV 5	Si
R_SLV	0.115	SLV 9	No

Maschio 7

Verifiche condotte secondo D.M. 17-01-18 (N.T.C.)

Dati geometrici

X ini.	Y ini.	X fin.	Y fin.	Quota i.	Quota.s	l	Sp.	h netta	h ini.	h fin.	a	a.s.,sx	a.s.,dx
-22.367	-3.292	-24.647	-3.292	L1	L3	2.28	0.45	2.99	2.99	2.99			

Caratteristiche del materiale

(Circolare 7 21-01-19 C8.5.I) Muratura in mattoni pieni e malta di calce LC2_Corti

fb	fk	fvk0	fmedio	τ0	fv0	μ	ϕ	fv,lim	E	G	FC
600000			345000	9000	20000	0.58	0.77	32500	320000000	128000000	1.2

Verifica a pressoflessione nel piano secondo D.M. 17-01-18 NTC §7.8.2.2.1 in combinazioni non sismiche, γM = 3

Comb.	Quota	N	M	σ0	Mu	c.s.	Verifica
SLU 77	0.33	-32306	4980.13	31484	22596.93	4.537	Si
SLU 77	0.73	-29742	4359.01	28985	21843.68	5.011	Si
SLU 66	0.33	-28803	4705	28070	21522.79	4.574	Si
SLU 66	0.73	-26378	4134.87	25707	20583.4	4.978	Si
SLU 74	0.33	-32134	4945.23	31316	22551.94	4.56	Si
SLU 74	0.73	-29589	4318.21	28836	21793.05	5.047	Si
SLU 48	0.33	-26045	4435.67	25382	20441.79	4.608	Si
SLU 48	0.73	-23732	3915.59	23128	19375.28	4.948	Si
SLU 83	0.33	-33338	4982.9	32490	22849.41	4.586	Si
SLU 83	0.73	-30760	4337.15	29977	22163.98	5.11	Si
SLU 69	0.33	-28975	4739.9	28238	21583.45	4.554	Si
SLU 69	0.73	-26531	4175.67	25856	20647.44	4.945	Si
SLU 45	0.33	-25873	4400.78	25214	20367.36	4.628	Si
SLU 45	0.73	-23579	3874.79	22979	19299.56	4.981	Si
SLU 71	0.33	-28751	4674.61	28020	21504.54	4.6	Si
SLU 71	0.73	-26325	4116.04	25656	20561.15	4.995	Si
SLU 79	0.33	-32083	4914.84	31266	22538.36	4.586	Si
SLU 79	0.73	-29536	4299.38	28785	21775.42	5.065	Si
SLU 81	0.33	-33166	4948.01	32322	22809.26	4.61	Si
SLU 81	0.73	-30607	4296.35	29828	22117.6	5.148	Si

Verifica a pressoflessione nel piano secondo D.M. 17-01-18 NTC §7.8.2.2.1 in combinazioni sismiche, γM = 2

Comb.	Quota	N	M	σ0	Mu	c.s.	Verifica
SLV 7	0.33	-11994	2831.85	11689	12366.45	4.367	Si
SLV 7	0.73	-11430	2044.19	11139	11843.27	5.794	Si
SLV 15	0.33	-11969	-3395.08	11665	12343.83	3.636	Si
SLV 15	0.73	-10156	-328.04	9898	10641.43	32.439	Si
SLV 3	0.33	-25071	8945.1	24433	22868.1	2.556	Si
SLV 3	0.73	-23908	5379.01	23300	22060.21	4.101	Si
SLV 16	0.33	-11969	-3395.08	11665	12343.83	3.636	Si
SLV 16	0.73	-10156	-328.04	9898	10641.43	32.439	Si
SLV 6	0.33	-36255	7958.1	35332	29382.41	3.692	Si
SLV 6	0.73	-33330	5865.2	32482	27898.53	4.757	Si
SLV 4	0.33	-25071	8945.1	24433	22868.1	2.556	Si
SLV 4	0.73	-23908	5379.01	23300	22060.21	4.101	Si
SLV 2	0.33	-32349	10482.98	31526	27365.91	2.611	Si
SLV 2	0.73	-30478	6525.31	29702	26301.67	4.031	Si
SLV 5	0.33	-36255	7958.1	35332	29382.41	3.692	Si
SLV 5	0.73	-33330	5865.2	32482	27898.53	4.757	Si
SLV 1	0.33	-32349	10482.98	31526	27365.91	2.611	Si
SLV 1	0.73	-30478	6525.31	29702	26301.67	4.031	Si
SLV 8	0.33	-11994	2831.85	11689	12366.45	4.367	Si
SLV 8	0.73	-11430	2044.19	11139	11843.27	5.794	Si

Verifica a taglio nel piano secondo D.M. 17-01-18 (N.T.C.) §7.8.2.2.2 con rottura per scorrimento in combinazioni non sismiche, γM = 3

Comb.	Quota	N	V par	M	σ0	σN	l'	fvd	Vt scorr.	Vt fess.diag.	Vt,lim	c.s.	Verifica
SLU 74	0.33	-32134	-3456	4945.23		31316	2.2802	9731	9985			2.89	Si
SLU 74	0.73	-29589	-3661	4318.21		28836	2.2802	9400	9646			2.63	Si
SLU 81	0.33	-33166	-3434	4948.01		32322	2.2802	9865	10123			2.95	Si
SLU 81	0.73	-30607	-3642	4296.35		29828	2.2802	9533	9781			2.69	Si
SLU 71	0.33	-28751	-3299	4674.61		28020	2.2802	9292	9534			2.89	Si
SLU 71	0.73	-26325	-3486	4116.04		25656	2.2802	8976	9211			2.64	Si
SLU 79	0.33	-32083	-3489	4914.84		31266	2.2802	9724	9978			2.86	Si
SLU 79	0.73	-29536	-3694	4299.38		28785	2.2802	9394	9639			2.61	Si
SLU 66	0.33	-28803	-3266	4705		28070	2.2802	9298	9541			2.92	Si
SLU 66	0.73	-26378	-3453	4134.87		25707	2.2802	8983	9218			2.67	Si
SLU 58	0.33	-29153	-3236	4610.62		28411	2.2802	9344	9588			2.96	Si
SLU 58	0.73	-26738	-3424	4039.3		26057	2.2802	9030	9266			2.71	Si
SLU 69	0.33	-28975	-3335	4739.9		28238	2.2802	9321	9564			2.87	Si
SLU 69	0.73	-26531	-3524	4175.67		25856	2.2802	9003	9238			2.62	Si
SLU 56	0.33	-29376	-3272	4675.9		28629	2.2802	9373	9617			2.94	Si
SLU 56	0.73	-26943	-3461	4098.93		26258	2.2802	9057	9293			2.69	Si
SLU 83	0.33	-33338	-3502	4982.9		32490	2.2802	9888	10146			2.9	Si
SLU 83	0.73	-30760	-3712	4337.15		29977	2.2802	9552	9802			2.64	Si
SLU 77	0.33	-32306	-3525	4980.13		31484	2.2802	9753	10008			2.84	Si
SLU 77	0.73	-29742	-3731	4359.01		28985	2.2802	9420	9666			2.59	Si

Verifica a taglio nel piano secondo D.M. 17-01-18 (N.T.C.) §7.8.2.2.2 con rottura per scorrimento in combinazioni sismiche, γM = 2

Comb.	Quota	N	V par	M	σ0	σN	l'	fvd	Vt scorr.	Vt fess.diag.	Vt,lim	c.s.	Verifica
SLV 16	0.33	-11969	-11974	-3395.08		11665	2.2802	10666	10945			0.91	No, Vu<V
SLV 16	0.73	-10156	-11435	-328.04		9898	2.2802	10313	10582			0.93	No, Vu<V
SLV 12	0.33	-8064	-6267	-870.21		7858	2.2802	9905	10164			1.62	Si
SLV 12	0.73	-7304	-5498	332.07		7118	2.2802	9757	10012			1.82	Si
SLV 1	0.33	-32349	7112	10482.98		31526	2.2802	14639	15021			2.11	Si
SLV 1	0.73	-30478	6288	6525.31		29702	2.2802	14274	14647			2.33	Si
SLV 13	0.33	-19248	-11332	-1857.21		18758	2.2802	12085	12400			1.09	Si
SLV 13	0.73	-16726	-11259	818.26		16301	2.2802	11593	11896			1.06	Si
SLV 14	0.33	-19248	-11332	-1857.21		18758	2.2802	12085	12400			1.09	Si
SLV 14	0.73	-16726	-11259	818.26		16301	2.2802	11593	11896			1.06	Si
SLV 2	0.33	-32349	7112	10482.98		31526	2.2802	14639	15021			2.11	Si
SLV 2	0.73	-30478	6288	6525.31		29702	2.2802	14274	14647			2.33	Si
SLV 15	0.33	-11969	-11974	-3395.08		11665	2.2802	10666	10945			0.91	No, Vu<V
SLV 15	0.73	-10156	-11435	-328.04		9898	2.2802	10313	10582			0.93	No, Vu<V
SLV 4	0.33	-25071	6470	8945.1		24433	2.2802	13220	13565			2.1	Si
SLV 4	0.73	-23908	6112	5379.01		23300	2.2802	12993	13333			2.18	Si
SLV 3	0.33	-25071	6470	8945.1		24433	2.2802	13220	13565			2.1	Si
SLV 3	0.73	-23908	6112	5379.01		23300	2.2802	12993	13333			2.18	Si
SLV 11	0.33	-8064	-6267	-870.21		7858	2.2802	9905	10164			1.62	Si
SLV 11	0.73	-7304	-5498	332.07		7118	2.2802	9757	10012			1.82	Si

Verifica a pressoflessione fuori piano D.M. 17-01-18 (N.T.C.)

quota -0.175 Wa 0.08 denominatore 8 γM = 2

Comb.	fd	Sa	σ0	N	M	Mc	Coeff.s.	Verifica
SLV 11	143750	0.24	9171	-9411	168.09	1958.45	11.65	Si
SLV 12	143750	0.24	9171	-9411	168.09	1958.45	11.65	Si
SLV 16	143750	0.24	10806	-11089	168.09	2274.27	13.53	Si
SLV 15	143750	0.24	10806	-11089	168.09	2274.27	13.53	Si
SLV 8	143750	0.24	14266	-14638	168.09	2909.02	17.31	Si
SLV 7	143750	0.24	14266	-14638	168.09	2909.02	17.31	Si
SLV 14	143750	0.24	17302	-17754	168.09	3429.04	20.4	Si
SLV 13	143750	0.24	17302	-17754	168.09	3429.04	20.4	Si
SLV 3	143750	0.24	27788	-28513	168.09	4956.5	29.49	Si
SLV 4	143750	0.24	27788	-28513	168.09	4956.5	29.49	Si

Verifica dei meccanismi locali di collasso con analisi cinematica lineare

forza di aggancio al piano = 0 quota mezzeria = -0.175 Wa = 0.08 Ta = 0.0332

Comb.	N top	N base	V orto	α0	M*	e*	a0*	aLim	Verifica
SLV 7	-4567	-18827	-3607	0	920.4	0.895	0	3.42705	No
SLV 5	-28797	-43797	5497	0	3364.1	0.962	0	3.42705	No
SLV 8	-4567	-18827	-3607	0	920.4	0.895	0	3.42705	No

Comb.	N top	N base	V orto	α0	M*	e*	a0*	aLim	Verifica
SLV 12	-1417	-11243	-3802	0	636.1	0.899	0	3.42705	No
SLV 1	-23991	-43905	2538	0	2875.4	0.956	0	3.6078	No
SLV 9	-25648	-36213	5302	0	3043.8	0.958	0	3.42705	No
SLV 11	-1417	-11243	-3802	0	636.1	0.899	0	3.42705	No
SLV 2	-23991	-43905	2538	0	2875.4	0.956	0	3.6078	No
SLV 10	-25648	-36213	5302	0	3043.8	0.958	0	3.42705	No
SLV 6	-28797	-43797	5497	0	3364.1	0.962	0	3.42705	No

Tabella dei coefficienti di sicurezza minimi

Stato limite	Coeff.s.	Comb.	Verifica
PF_SLU	4.537	SLU 77	Si
V_SLU	2.591	SLU 77	Si
PF_SLV	2.556	SLV 3	Si
V_SLV	0.914	SLV 15	No
PFFP_SLV	11.651	SLV 11	Si
R_SLV	0	SLV 1	No

Maschio 8

Verifiche condotte secondo D.M. 17-01-18 (N.T.C.)

Dati geometrici

X ini.	Y ini.	X fin.	Y fin.	Quota i.	Quota.s	l	Sp.	h netta	h ini.	h fin.	a	a.s.,sx	a.s.,dx
-18.267	-3.292	-21.367	-3.292	L1	L3	3.1	0.45	2.99	2.99	2.99			

Caratteristiche del materiale

(Circolare 7 21-01-19 C8.5.I) Muratura in mattoni pieni e malta di calce LC2_Corti

fb	fk	fvk0	fmedio	τ0	fv0	μ	ϕ	fv,lim	E	G	FC
600000			345000	9000	20000	0.58	0.77	32500	320000000	128000000	1.2

Verifica a pressoflessione nel piano secondo D.M. 17-01-18 NTC §7.8.2.2.1 in combinazioni non sismiche, γM = 3

Comb.	Quota	N	M	σ0	Mu	c.s.	Verifica
SLU 69	0.33	-35611	-11342.65	25528	37896.92	3.341	Si
SLU 69	0.73	-34360	-12398.54	24632	37152.17	2.996	Si
SLU 56	0.33	-36290	-11378.66	26015	38283.5	3.364	Si
SLU 56	0.73	-35039	-12457.65	25119	37561.92	3.015	Si
SLU 66	0.33	-35432	-11235.29	25400	37793.01	3.364	Si
SLU 66	0.73	-34181	-12301.28	24503	37042.16	3.011	Si
SLU 83	0.33	-41536	-12621.32	29776	40845.78	3.236	Si
SLU 83	0.73	-40286	-13791.42	28880	40303.19	2.922	Si
SLU 81	0.33	-41357	-12513.97	29648	40770.79	3.258	Si
SLU 81	0.73	-40107	-13694.17	28751	40222.1	2.937	Si
SLU 71	0.33	-35379	-11244.7	25362	37762.14	3.358	Si
SLU 71	0.73	-34128	-12289.82	24466	37009.49	3.011	Si
SLU 84	0.33	-43602	-12833.34	31257	41648.68	3.245	Si
SLU 84	0.73	-42352	-13719.28	30361	41176.58	3.001	Si
SLU 79	0.33	-39814	-12283.49	28542	40087.58	3.264	Si
SLU 79	0.73	-38564	-13409.02	27645	39486.24	2.945	Si
SLU 74	0.33	-39867	-12274.07	28580	40112.05	3.268	Si
SLU 74	0.73	-38616	-13420.48	27683	39512.51	2.944	Si
SLU 77	0.33	-40046	-12381.43	28708	40194.31	3.246	Si
SLU 77	0.73	-38795	-13517.73	27811	39600.88	2.93	Si

Verifica a pressoflessione nel piano secondo D.M. 17-01-18 NTC §7.8.2.2.1 in combinazioni sismiche, γM = 2

Comb.	Quota	N	M	σ0	Mu	c.s.	Verifica
SLV 13	0.33	-30167	-17483.19	21626	38481.38	2.201	Si
SLV 13	0.73	-29320	-10807.39	21019	37627.24	3.482	Si
SLV 10	0.33	-41894	-18174.96	30033	48973.16	2.695	Si
SLV 10	0.73	-41631	-16115.98	29844	48765.46	3.026	Si
SLV 1	0.33	-33613	-4212.87	24096	41824.15	9.928	Si
SLV 1	0.73	-32974	-12128.31	23638	41220.42	3.399	Si
SLV 16	0.33	-21149	-12909.15	15161	28712.21	2.224	Si
SLV 16	0.73	-19864	-6653.44	14240	27200.14	4.088	Si
SLV 6	0.33	-42928	-14193.86	30774	49778.16	3.507	Si
SLV 6	0.73	-42727	-16512.25	30630	49623.5	3.005	Si
SLV 15	0.33	-21149	-12909.15	15161	28712.21	2.224	Si
SLV 15	0.73	-19864	-6653.44	14240	27200.14	4.088	Si
SLV 5	0.33	-42928	-14193.86	30774	49778.16	3.507	Si
SLV 5	0.73	-42727	-16512.25	30630	49623.5	3.005	Si
SLV 9	0.33	-41894	-18174.96	30033	48973.16	2.695	Si
SLV 9	0.73	-41631	-16115.98	29844	48765.46	3.026	Si
SLV 2	0.33	-33613	-4212.87	24096	41824.15	9.928	Si
SLV 2	0.73	-32974	-12128.31	23638	41220.42	3.399	Si
SLV 14	0.33	-30167	-17483.19	21626	38481.38	2.201	Si
SLV 14	0.73	-29320	-10807.39	21019	37627.24	3.482	Si

Verifica a taglio nel piano secondo D.M. 17-01-18 (N.T.C.) §7.8.2.2.2 con rottura per scorrimento in combinazioni non sismiche, γM = 3

Comb.	Quota	N	V par	M	σ0	σN	l'	fvd	Vt scorr.	Vt fess.diag.	Vt,lim	c.s.	Verifica
SLU 62	0.33	-37780	2998	-11618.55		27083	3.0999	9167	12787			4.26	Si
SLU 62	0.73	-36529	2998	-12731.34		26187	3.0999	9047	12620			4.21	Si
SLU 53	0.33	-36111	2939	-11271.3		25887	3.0999	9007	12564			4.27	Si
SLU 53	0.73	-34860	2939	-12360.4		24990	3.0999	8888	12398			4.22	Si
SLU 79	0.33	-39814	3030	-12283.49		28542	3.0999	9361	13058			4.31	Si
SLU 79	0.73	-38564	3030	-13409.02		27645	3.0999	9242	12892			4.25	Si
SLU 81	0.33	-41357	3167	-12513.97		29648	3.0999	9509	13264			4.19	Si
SLU 81	0.73	-40107	3167	-13694.17		28751	3.0999	9389	13097			4.14	Si

Comb.	Quota	N	V par	M	σ0	σN	l'	fvd	Vt scorr.	Vt fess.diag.	Vt,lim	c.s.	Verifica
SLU 83	0.33	-41536	3142	-12621.32		29776	3.0999	9526	13288			4.23	Si
SLU 83	0.73	-40286	3142	-13791.42		28880	3.0999	9406	13121			4.18	Si
SLU 56	0.33	-36290	2914	-11378.66		26015	3.0999	9024	12588			4.32	Si
SLU 56	0.73	-35039	2914	-12457.65		25119	3.0999	8905	12422			4.26	Si
SLU 64	0.33	-35021	2880	-11029.99		25106	3.0999	8903	12419			4.31	Si
SLU 64	0.73	-33770	2880	-12095.32		24209	3.0999	8783	12252			4.25	Si
SLU 74	0.33	-39867	3082	-12274.07		28580	3.0999	9366	13065			4.24	Si
SLU 74	0.73	-38616	3082	-13420.48		27683	3.0999	9247	12899			4.18	Si
SLU 77	0.33	-40046	3057	-12381.43		28708	3.0999	9383	13089			4.28	Si
SLU 77	0.73	-38795	3057	-13517.73		27811	3.0999	9264	12922			4.23	Si
SLU 60	0.33	-37601	3024	-11511.19		26955	3.0999	9150	12763			4.22	Si
SLU 60	0.73	-36351	3024	-12634.09		26059	3.0999	9030	12596			4.17	Si

Verifica a taglio nel piano secondo D.M. 17-01-18 (N.T.C.) §7.8.2.2.2 con rottura per scorrimento in combinazioni sismiche, γM = 2

Comb.	Quota	N	V par	M	σ0	σN	l'	fvd	Vt scorr.	Vt fess.diag.	Vt,lim	c.s.	Verifica
SLV 1	0.33	-33613	19536	-4212.87		24096	3.0999	13153	18347			0.94	No, Vu<V
SLV 1	0.73	-32974	20263	-12128.31		23638	3.0999	13061	18219			0.9	No, Vu<V
SLV 8	0.33	-12868	8853	1052.93		9225	3.0999	10178	14198			1.6	Si
SLV 8	0.73	-11207	7142	-2665.77		8034	3.0999	9940	13866			1.94	Si
SLV 4	0.33	-24595	20320	361.17		17632	3.0999	11860	16544			0.81	No, Vu<V
SLV 4	0.73	-23518	19984	-7974.36		16859	3.0999	11705	16328			0.82	No, Vu<V
SLV 2	0.33	-33613	19536	-4212.87		24096	3.0999	13153	18347			0.94	No, Vu<V
SLV 2	0.73	-32974	20263	-12128.31		23638	3.0999	13061	18219			0.9	No, Vu<V
SLV 13	0.33	-30167	-15838	-17483.19		23028	2.9112	12939	16950			1.07	Si
SLV 13	0.73	-29320	-15502	-10807.39		21019	3.0999	12537	17489			1.13	Si
SLV 14	0.33	-30167	-15838	-17483.19		23028	2.9112	12939	16950			1.07	Si
SLV 14	0.73	-29320	-15502	-10807.39		21019	3.0999	12537	17489			1.13	Si
SLV 7	0.33	-12868	8853	1052.93		9225	3.0999	10178	14198			1.6	Si
SLV 7	0.73	-11207	7142	-2665.77		8034	3.0999	9940	13866			1.94	Si
SLV 15	0.33	-21149	-15054	-12909.15		16674	2.8186	11668	14800			0.98	No, Vu<V
SLV 15	0.73	-19864	-15780	-6653.44		14240	3.0999	11181	15597			0.99	No, Vu<V
SLV 3	0.33	-24595	20320	361.17		17632	3.0999	11860	16544			0.81	No, Vu<V
SLV 3	0.73	-23518	19984	-7974.36		16859	3.0999	11705	16328			0.82	No, Vu<V
SLV 16	0.33	-21149	-15054	-12909.15		16674	2.8186	11668	14800			0.98	No, Vu<V
SLV 16	0.73	-19864	-15780	-6653.44		14240	3.0999	11181	15597			0.99	No, Vu<V

Verifica a pressoflessione fuori piano D.M. 17-01-18 (N.T.C.)

quota -0.175 Wa 0.08 denominatore 8 γM = 2

Comb.	fd	Sa	σ0	N	M	Mc	Coeff.s.	Verifica
SLV 12	143750	0.24	8098	-11296	228.51	2373.25	10.39	Si
SLV 11	143750	0.24	8098	-11296	228.51	2373.25	10.39	Si
SLV 7	143750	0.24	8512	-11873	228.51	2485.36	10.88	Si
SLV 8	143750	0.24	8512	-11873	228.51	2485.36	10.88	Si
SLV 15	143750	0.24	13808	-19262	228.51	3844.16	16.82	Si
SLV 16	143750	0.24	13808	-19262	228.51	3844.16	16.82	Si
SLV 4	143750	0.24	15186	-21184	228.51	4174.01	18.27	Si
SLV 3	143750	0.24	15186	-21184	228.51	4174.01	18.27	Si
SLV 14	143750	0.24	19116	-26666	228.51	5061.19	22.15	Si
SLV 13	143750	0.24	19116	-26666	228.51	5061.19	22.15	Si

Verifica dei meccanismi locali di collasso con analisi cinematica lineare

forza di aggancio al piano = 0 quota mezzeria = -0.175 Wa = 0.08 Ta = 0.0332

Comb.	N top	N base	V orto	α0	M*	e*	a0*	aLim	Verifica
SLV 1	-24576	-30730	2700	0	3092.8	0.946	0	3.6078	No
SLV 7	-941	-14008	-2132	0	797.3	0.926	0	3.42705	No
SLV 8	-941	-14008	-2132	0	797.3	0.926	0	3.42705	No
SLV 9	-34693	-36910	5164	0	4120.3	0.958	0	3.42705	No
SLV 5	-35627	-37920	5213	0	4215.3	0.959	0	3.42705	No
SLV 6	-35627	-37920	5213	0	4215.3	0.959	0	3.42705	No
SLV 10	-34693	-36910	5164	0	4120.3	0.958	0	3.42705	No
SLV 11	-7	-12998	-2181	0	765.3	0.999	0	3.42705	No
SLV 2	-24576	-30730	2700	0	3092.8	0.946	0	3.6078	No
SLV 12	-7	-12998	-2181	0	765.3	0.999	0	3.42705	No

Tabella dei coefficienti di sicurezza minimi

Stato limite	Coeff.s.	Comb.	Verifica
PF_SLU	2.922	SLU 83	Si
V_SLU	4.136	SLU 81	Si
PF_SLV	2.201	SLV 13	Si
V_SLV	0.814	SLV 3	No
PFFP_SLV	10.386	SLV 11	Si
R_SLV	0	SLV 1	No

Maschio 9

Verifiche condotte secondo D.M. 17-01-18 (N.T.C.)

Dati geometrici

X ini.	Y ini.	X fin.	Y fin.	Quota i.	Quota.s	l	Sp.	h netta	h ini.	h fin.	a	a.s.,sx	a.s.,dx
-16.452	-3.292	-17.267	-3.292	L1	L3	0.815	0.45	2.99	2.99	2.99			

Caratteristiche del materiale

(Circolare 7 21-01-19 C8.5.I) Muratura in mattoni pieni e malta di calce LC2_Corti

fb	fk	fvk0	fmedio	τ0	fv0	μ	ϕ	fv,lim	E	G	FC
600000			345000	9000	20000	0.58	0.77	32500	320000000	128000000	1.2

Verifica a pressoflessione nel piano secondo D.M. 17-01-18 NTC §7.8.2.2.1 in combinazioni non sismiche, γM = 3

Comb.	Quota	N	M	σ0	Mu	c.s.	Verifica
SLU 76	0.33	-19640	448.31	53559	2740.65	6.113	Si
SLU 76	0.73	-17495	2680.89	47710	2953.16	1.102	Si
SLU 84	0.33	-20507	409.87	55925	2619	6.39	Si
SLU 84	0.73	-18243	2759.58	49749	2893.32	1.048	Si
SLU 75	0.33	-19632	418.78	53539	2741.58	6.547	Si
SLU 75	0.73	-17513	2661.38	47760	2951.88	1.109	Si
SLU 83	0.33	-20350	352.49	55497	2642.52	7.497	Si
SLU 83	0.73	-18112	2703.46	49392	2904.9	1.075	Si
SLU 80	0.33	-19628	415.61	53526	2742.19	6.598	Si
SLU 80	0.73	-17505	2659.88	47738	2952.44	1.11	Si
SLU 78	0.33	-19725	424.33	53791	2729.6	6.433	Si
SLU 78	0.73	-17611	2677.78	48026	2944.89	1.1	Si
SLU 81	0.33	-20258	346.93	55245	2656.08	7.656	Si
SLU 81	0.73	-18014	2687.06	49126	2913.22	1.084	Si
SLU 73	0.33	-19547	442.75	53306	2752.42	6.217	Si
SLU 73	0.73	-17397	2664.49	47444	2959.84	1.111	Si
SLU 77	0.33	-19568	366.95	53363	2749.77	7.494	Si
SLU 77	0.73	-17480	2621.66	47669	2954.21	1.127	Si
SLU 82	0.33	-20415	404.31	55673	2632.96	6.512	Si
SLU 82	0.73	-18145	2743.18	49483	2902	1.058	Si

Verifica a pressoflessione nel piano secondo D.M. 17-01-18 NTC §7.8.2.2.1 in combinazioni sismiche, γM = 2

Comb.	Quota	N	M	σ0	Mu	c.s.	Verifica
SLV 2	0.33	-16895	-193.13	46075	4287.99	22.203	Si
SLV 2	0.73	-12629	1549.68	34440	3695.15	2.384	Si
SLV 15	0.33	-9763	718.5	26625	3111.11	4.33	Si
SLV 15	0.73	-11190	2038.37	30515	3420.48	1.678	Si
SLV 9	0.33	-16912	852.64	46120	4289.66	5.031	Si
SLV 9	0.73	-16719	2905.19	45594	4270.05	1.47	Si
SLV 14	0.33	-12324	967.97	33609	3640.16	3.761	Si
SLV 14	0.73	-13956	2609.67	38059	3915.03	1.5	Si
SLV 13	0.33	-12324	967.97	33609	3640.16	3.761	Si
SLV 13	0.73	-13956	2609.67	38059	3915.03	1.5	Si
SLV 16	0.33	-9763	718.5	26625	3111.11	4.33	Si
SLV 16	0.73	-11190	2038.37	30515	3420.48	1.678	Si
SLV 1	0.33	-16895	-193.13	46075	4287.99	22.203	Si
SLV 1	0.73	-12629	1549.68	34440	3695.15	2.384	Si
SLV 5	0.33	-18283	504.31	49860	4409.5	8.744	Si
SLV 5	0.73	-16321	2587.19	44508	4227.45	1.634	Si
SLV 10	0.33	-16912	852.64	46120	4289.66	5.031	Si
SLV 10	0.73	-16719	2905.19	45594	4270.05	1.47	Si
SLV 6	0.33	-18283	504.31	49860	4409.5	8.744	Si
SLV 6	0.73	-16321	2587.19	44508	4227.45	1.634	Si

Verifica a taglio nel piano secondo D.M. 17-01-18 (N.T.C.) §7.8.2.2.2 con rottura per scorrimento in combinazioni non sismiche, γM = 3

Comb.	Quota	N	V par	M	σ0	σN	I'	fvd	Vt scorr.	Vt fess.diag.	Vt,lim	c.s.	Verifica
SLU 75	0.33	-19632	-1844	418.78		53539	0.8149	10833	3972			2.15	Si
SLU 75	0.73	-17513	-1435	2661.38		50780	0.7664	10833	3736			2.6	Si
SLU 80	0.33	-19628	-1839	415.61		53526	0.8149	10833	3972			2.16	Si
SLU 80	0.73	-17505	-1436	2659.88		50753	0.7665	10833	3737			2.6	Si
SLU 84	0.33	-20507	-1838	409.87		55925	0.8149	10833	3972			2.16	Si
SLU 84	0.73	-18243	-1452	2759.58		52751	0.7685	10833	3746			2.58	Si
SLU 76	0.33	-19640	-1843	448.31		53559	0.8149	10833	3972			2.16	Si
SLU 76	0.73	-17495	-1467	2680.89		50981	0.7626	10833	3718			2.53	Si
SLU 78	0.33	-19725	-1874	424.33		53791	0.8149	10833	3972			2.12	Si
SLU 78	0.73	-17611	-1452	2677.78		51080	0.7661	10833	3735			2.57	Si
SLU 74	0.33	-19475	-1793	361.39		53111	0.8149	10833	3972			2.22	Si
SLU 74	0.73	-17382	-1364	2605.26		49992	0.7727	10833	3767			2.76	Si
SLU 70	0.33	-17456	-1805	424.76		47604	0.8149	10833	3972			2.2	Si
SLU 70	0.73	-15663	-1376	2406.88		45719	0.7613	10833	3711			2.7	Si
SLU 73	0.33	-19547	-1813	442.75		53306	0.8149	10833	3972			2.19	Si
SLU 73	0.73	-17397	-1450	2664.49		50680	0.7628	10833	3719			2.56	Si
SLU 77	0.33	-19568	-1822	366.95		53363	0.8149	10833	3972			2.18	Si
SLU 77	0.73	-17480	-1380	2621.66		50293	0.7724	10833	3765			2.73	Si
SLU 82	0.33	-20415	-1808	404.31		55673	0.8149	10833	3972			2.2	Si
SLU 82	0.73	-18145	-1435	2743.18		52451	0.7688	10833	3748			2.61	Si

Verifica a taglio nel piano secondo D.M. 17-01-18 (N.T.C.) §7.8.2.2.2 con rottura per scorrimento in combinazioni sismiche, γM = 2

Comb.	Quota	N	V par	M	σ0	σN	I'	fvd	Vt scorr.	Vt fess.diag.	Vt,lim	c.s.	Verifica
SLV 4	0.33	-14334	6658	-442.6		39091	0.8149	16151	5923			0.89	No, Vu<V
SLV 4	0.73	-9863	759	978.38		26896	0.8149	13713	5028			6.63	Si
SLV 15	0.33	-9763	-7721	718.5		26625	0.8149	13658	5008			0.65	No, Vu<V
SLV 15	0.73	-11190	-1704	2038.37		36794	0.6758	15692	4772			2.8	Si
SLV 16	0.33	-9763	-7721	718.5		26625	0.8149	13658	5008			0.65	No, Vu<V
SLV 16	0.73	-11190	-1704	2038.37		36794	0.6758	15692	4772			2.8	Si
SLV 14	0.33	-12324	-9179	967.97		33609	0.8149	15055	5521			0.6	No, Vu<V
SLV 14	0.73	-13956	-2694	2609.67		46895	0.6613	16250	4836			1.79	Si
SLV 13	0.33	-12324	-9179	967.97		33609	0.8149	15055	5521			0.6	No, Vu<V
SLV 13	0.73	-13956	-2694	2609.67		46895	0.6613	16250	4836			1.79	Si
SLV 9	0.33	-16912	-5846	852.64		46120	0.8149	16250	5959			1.02	Si
SLV 9	0.73	-16719	-2988	2905.19		53000	0.701	16250	5126			1.72	Si
SLV 10	0.33	-16912	-5846	852.64		46120	0.8149	16250	5959			1.02	Si
SLV 10	0.73	-16719	-2988	2905.19		53000	0.701	16250	5126			1.72	Si
SLV 1	0.33	-16895	5200	-193.13		46075	0.8149	16250	5959			1.15	Si
SLV 1	0.73	-12629	-231	1549.68		34440	0.8149	15221	5582			24.11	Si
SLV 2	0.33	-16895	5200	-193.13		46075	0.8149	16250	5959			1.15	Si
SLV 2	0.73	-12629	-231	1549.68		34440	0.8149	15221	5582			24.11	Si
SLV 3	0.33	-14334	6658	-442.6		39091	0.8149	16151	5923			0.89	No, Vu<V

Comb.	Quota	N	V par	M	σ0	σN	l'	fvd	Vt scorr.	Vt fess.diag.	Vt,lim	c.s.	Verifica
SLV 3	0.73	-9863	759	978.38		26896	0.8149	13713	5028			6.63	Si

Verifica a pressoflessione fuori piano D.M. 17-01-18 (N.T.C.)

quota -0.175 Wa 0.08 denominatore 8 γM = 2

Comb.	fd	Sa	σ0	N	M	Mc	Coeff.s.	Verifica
SLV 8	143750	0.24	20445	-7497	60.07	1404.57	23.38	Si
SLV 7	143750	0.24	20445	-7497	60.07	1404.57	23.38	Si
SLV 12	143750	0.24	21442	-7863	60.07	1458.63	24.28	Si
SLV 11	143750	0.24	21442	-7863	60.07	1458.63	24.28	Si
SLV 3	143750	0.24	25013	-9172	60.07	1641.25	27.32	Si
SLV 4	143750	0.24	25013	-9172	60.07	1641.25	27.32	Si
SLV 15	143750	0.24	28336	-10391	60.07	1795.71	29.89	Si
SLV 16	143750	0.24	28336	-10391	60.07	1795.71	29.89	Si
SLV 2	143750	0.24	29925	-10973	60.07	1864.32	31.04	Si
SLV 1	143750	0.24	29925	-10973	60.07	1864.32	31.04	Si

Verifica dei meccanismi locali di collasso con analisi cinematica lineare

forza di aggancio al piano = 0 quota mezzeria = -0.175 Wa = 0.08 Ta = 0.0332

Comb.	N top	N base	V orto	α0	M*	e*	a0*	aLim	Verifica
SLV 2	-9745	-7301	919	0	1146.7	0.96	0	3.6078	No
SLV 1	-9745	-7301	919	0	1146.7	0.96	0	3.6078	No
SLV 6	-12316	-15491	991	0.006	1408.3	0.967	0.09532	3.42705	No
SLV 5	-12316	-15491	991	0.006	1408.3	0.967	0.09532	3.42705	No
SLV 4	-7432	-3894	594	0.014	911.6	0.951	0.20662	3.6078	No
SLV 3	-7432	-3894	594	0.014	911.6	0.951	0.20662	3.6078	No
SLV 12	-4499	-7748	-358	0.024	614.5	0.931	0.36676	3.42705	No
SLV 11	-4499	-7748	-358	0.024	614.5	0.931	0.36676	3.42705	No
SLV 10	-12208	-19104	727	0.026	1397.3	0.967	0.3879	3.42705	No
SLV 9	-12208	-19104	727	0.026	1397.3	0.967	0.3879	3.42705	No

Tabella dei coefficienti di sicurezza minimi

Stato limite	Coeff.s.	Comb.	Verifica
PF_SLU	1.048	SLU 84	Si
V_SLU	2.12	SLU 78	Si
PF_SLV	1.47	SLV 9	Si
V_SLV	0.601	SLV 13	No
PFFP_SLV	23.382	SLV 7	Si
R_SLV	0	SLV 1	No

Maschio 10

Verifiche condotte secondo D.M. 17-01-18 (N.T.C.)

Dati geometrici

X ini.	Y ini.	X fin.	Y fin.	Quota i.	Quota.s	l	Sp.	h netta	h ini.	h fin.	a	a.s.,sx	a.s.,dx
-13.757	-3.292	-14.292	-3.292	L1	L3	0.536	0.45	2.99	2.99	2.99			

Caratteristiche del materiale

(Circolare 7 21-01-19 C8.5.I) Muratura in mattoni pieni e malta di calce LC2_Corti

fb	fk	fvk0	fmedio	τ0	fv0	μ	ϕ	fv,lim	E	G	FC
600000			345000	9000	20000	0.58	0.77	32500	320000000	128000000	1.2

Verifica a pressoflessione nel piano secondo D.M. 17-01-18 NTC §7.8.2.2.1 in combinazioni non sismiche, γM = 3

Comb.	Quota	N	M	σ0	Mu	c.s.	Verifica
SLU 80	-1.67	-9113	-767.27	37793	1308.67	1.706	Si
SLU 80	0.43	-12306	48.29	51035	1231.27	25.497	Si
SLU 76	-1.67	-8982	-765.92	37252	1305.91	1.705	Si
SLU 76	0.43	-12176	51.09	50497	1239.84	24.269	Si
SLU 75	-1.67	-9067	-767.15	37606	1307.76	1.705	Si
SLU 75	0.43	-12262	49.51	50853	1234.22	24.929	Si
SLU 83	-1.67	-9462	-795.32	39242	1313.75	1.652	Si
SLU 83	0.43	-12771	46.24	52965	1196.77	25.879	Si
SLU 81	-1.67	-9381	-791.14	38907	1312.87	1.659	Si
SLU 81	0.43	-12666	47.43	52531	1205.05	25.404	Si
SLU 84	-1.67	-9387	-799.56	38933	1312.94	1.642	Si
SLU 84	0.43	-12733	48.65	52810	1199.77	24.66	Si
SLU 73	-1.67	-8901	-761.74	36917	1303.98	1.712	Si
SLU 73	0.43	-12071	52.28	50063	1246.42	23.842	Si
SLU 77	-1.67	-9223	-767.09	38250	1310.63	1.709	Si
SLU 77	0.43	-12404	45.91	51443	1224.47	26.672	Si
SLU 78	-1.67	-9148	-771.32	37941	1309.34	1.698	Si
SLU 78	0.43	-12366	48.32	51288	1227.09	25.396	Si
SLU 82	-1.67	-9307	-795.38	38598	1311.9	1.649	Si
SLU 82	0.43	-12629	49.84	52375	1207.94	24.235	Si

Verifica a pressoflessione nel piano secondo D.M. 17-01-18 NTC §7.8.2.2.1 in combinazioni sismiche, γM = 2

Comb.	Quota	N	M	σ0	Mu	c.s.	Verifica
SLV 14	-1.67	-4104	-1269.42	0	0	0	No, e>l/2
SLV 14	0.43	-10785	335.9	44728	1831.66	5.453	Si
SLV 8	-1.67	-5225	-257.97	21672	1151.64	4.464	Si
SLV 8	0.43	-5845	-75.74	24241	1255.23	16.574	Si
SLV 15	-1.67	-2859	-1244.34	0	0	0	No, e>l/2
SLV 15	0.43	-9488	322.64	39350	1723.3	5.341	Si
SLV 9	-1.67	-7615	-783.33	31582	1512.81	1.931	Si
SLV 9	0.43	-11151	145.18	46246	1856.7	12.789	Si

Comb.	Quota	N	M	σ0	Mu	c.s.	Verifica
SLV 12	-1.67	-3462	-699.71	14359	818.55	1.17	Si
SLV 12	0.43	-6828	100.99	28318	1405.33	13.915	Si
SLV 7	-1.67	-5225	-257.97	21672	1151.64	4.464	Si
SLV 7	0.43	-5845	-75.74	24241	1255.23	16.574	Si
SLV 11	-1.67	-3462	-699.71	14359	818.55	1.17	Si
SLV 11	0.43	-6828	100.99	28318	1405.33	13.915	Si
SLV 10	-1.67	-7615	-783.33	31582	1512.81	1.931	Si
SLV 10	0.43	-11151	145.18	46246	1856.7	12.789	Si
SLV 13	-1.67	-4104	-1269.42	0	0	0	No, e>l/2
SLV 13	0.43	-10785	335.9	44728	1831.66	5.453	Si
SLV 16	-1.67	-2859	-1244.34	0	0	0	No, e>l/2
SLV 16	0.43	-9488	322.64	39350	1723.3	5.341	Si

Verifica a taglio nel piano secondo D.M. 17-01-18 (N.T.C.) §7.8.2.2.2 con rottura per scorrimento in combinazioni non sismiche, γM = 3

Comb.	Quota	N	V par	M	σ0	σN	l'	fvd	Vt scorr.	Vt fess.diag.	Vt,lim	c.s.	Verifica
SLU 75	-1.67	-9067	-1974	-767.15		37606	0.5358	10570	2549			1.29	Si
SLU 75	0.43	-12262	-502	49.51		50853	0.5358	10833	2612			5.2	Si
SLU 82	-1.67	-9307	-2052	-795.38		38598	0.5358	10702	2580			1.26	Si
SLU 82	0.43	-12629	-506	49.84		52375	0.5358	10833	2612			5.16	Si
SLU 81	-1.67	-9381	-2043	-791.14		38907	0.5358	10743	2590			1.27	Si
SLU 81	0.43	-12666	-508	47.43		52531	0.5358	10833	2612			5.14	Si
SLU 80	-1.67	-9113	-1975	-767.27		37793	0.5358	10595	2555			1.29	Si
SLU 80	0.43	-12306	-503	48.29		51035	0.5358	10833	2612			5.19	Si
SLU 73	-1.67	-8901	-1960	-761.74		36917	0.5358	10478	2526			1.29	Si
SLU 73	0.43	-12071	-496	52.28		50063	0.5358	10833	2612			5.26	Si
SLU 83	-1.67	-9462	-2053	-795.32		39242	0.5358	10788	2601			1.27	Si
SLU 83	0.43	-12771	-511	46.24		52965	0.5358	10833	2612			5.11	Si
SLU 77	-1.67	-9223	-1976	-767.09		38250	0.5358	10656	2569			1.3	Si
SLU 77	0.43	-12404	-507	45.91		51443	0.5358	10833	2612			5.16	Si
SLU 84	-1.67	-9387	-2062	-799.56		38933	0.5358	10747	2591			1.26	Si
SLU 84	0.43	-12733	-509	48.65		52810	0.5358	10833	2612			5.13	Si
SLU 78	-1.67	-9148	-1985	-771.32		37941	0.5358	10614	2559			1.29	Si
SLU 78	0.43	-12366	-505	48.32		51288	0.5358	10833	2612			5.17	Si
SLU 76	-1.67	-8982	-1971	-765.92		37252	0.5358	10523	2537			1.29	Si
SLU 76	0.43	-12176	-499	51.09		50497	0.5358	10833	2612			5.23	Si

Verifica a taglio nel piano secondo D.M. 17-01-18 (N.T.C.) §7.8.2.2.2 con rottura per scorrimento in combinazioni sismiche, γM = 2

Comb.	Quota	N	V par	M	σ0	σN	l'	fvd	Vt scorr.	Vt fess.diag.	Vt,lim	c.s.	Verifica
SLV 3	-1.67	-8736	124	228.12		36231	0.5358	15580	3757			30.24	Si
SLV 3	0.43	-6211	-1136	-266.45		25758	0.5358	13485	3251			2.86	Si
SLV 10	-1.67	-7615	-1969	-783.33		34178	0.4951	15169	3380			1.72	Si
SLV 10	0.43	-11151	147	145.18		46246	0.5358	16250	3918			26.74	Si
SLV 9	-1.67	-7615	-1969	-783.33		34178	0.4951	15169	3380			1.72	Si
SLV 9	0.43	-11151	147	145.18		46246	0.5358	16250	3918			26.74	Si
SLV 14	-1.67	-4104	-2804	-1269.42		0	0	8333	0			0	No, Vu<V
SLV 14	0.43	-10785	414	335.9		44728	0.5358	16250	3918			9.46	Si
SLV 16	-1.67	-2859	-2679	-1244.34		0	0	8333	0			0	No, Vu<V
SLV 16	0.43	-9488	233	322.64		39350	0.5358	16203	3907			16.79	Si
SLV 12	-1.67	-3462	-1552	-699.71		38970	0.1974	16127	1433			0.92	No, Vu<V
SLV 12	0.43	-6828	-458	100.99		28318	0.5358	13997	3375			7.37	Si
SLV 4	-1.67	-8736	124	228.12		36231	0.5358	15580	3757			30.24	Si
SLV 4	0.43	-6211	-1136	-266.45		25758	0.5358	13485	3251			2.86	Si
SLV 15	-1.67	-2859	-2679	-1244.34		0	0	8333	0			0	No, Vu<V
SLV 15	0.43	-9488	233	322.64		39350	0.5358	16203	3907			16.79	Si
SLV 11	-1.67	-3462	-1552	-699.71		38970	0.1974	16127	1433			0.92	No, Vu<V
SLV 11	0.43	-6828	-458	100.99		28318	0.5358	13997	3375			7.37	Si
SLV 13	-1.67	-4104	-2804	-1269.42		0	0	8333	0			0	No, Vu<V
SLV 13	0.43	-10785	414	335.9		44728	0.5358	16250	3918			9.46	Si

Verifica a pressoflessione fuori piano D.M. 17-01-18 (N.T.C.)

quota -0.175 Wa 0.08 denominatore 8 γM = 2

Comb.	fd	Sa	σ0	N	M	Mc	Coeff.s.	Verifica
SLV 8	143750	0.24	31260	-7537	39.5	1262.03	31.95	Si
SLV 7	143750	0.24	31260	-7537	39.5	1262.03	31.95	Si
SLV 4	143750	0.24	33895	-8173	39.5	1328.75	33.64	Si
SLV 3	143750	0.24	33895	-8173	39.5	1328.75	33.64	Si
SLV 12	143750	0.24	34993	-8437	39.5	1354.74	34.3	Si
SLV 11	143750	0.24	34993	-8437	39.5	1354.74	34.3	Si
SLV 2	143750	0.24	39886	-9617	39.5	1457.52	36.9	Si
SLV 1	143750	0.24	39886	-9617	39.5	1457.52	36.9	Si
SLV 15	143750	0.24	46337	-11173	39.5	1560.53	39.51	Si
SLV 16	143750	0.24	46337	-11173	39.5	1560.53	39.51	Si

Verifica dei meccanismi locali di collasso con analisi cinematica lineare

forza di aggancio al piano = 0 quota mezzeria = -0.175 Wa = 0.08 Ta = 0.0332

Comb.	N top	N base	V orto	α0	M*	e*	a0*	aLim	Verifica
SLV 13	-6366	-4104	338	0.034	749.7	0.96	0.51614	3.6078	No
SLV 14	-6366	-4104	338	0.034	749.7	0.96	0.51614	3.6078	No
SLV 9	-7709	-7615	376	0.036	886.4	0.965	0.54384	3.42705	No
SLV 10	-7709	-7615	376	0.036	886.4	0.965	0.54384	3.42705	No
SLV 16	-4948	-2859	213	0.046	605.7	0.951	0.70137	3.6078	No
SLV 15	-4948	-2859	213	0.046	605.7	0.951	0.70137	3.6078	No
SLV 6	-7443	-9378	284	0.046	859.3	0.964	0.69592	3.42705	No
SLV 5	-7443	-9378	284	0.046	859.3	0.964	0.69592	3.42705	No
SLV 8	-2718	-5225	-131	0.051	379.8	0.928	0.7961	3.42705	No
SLV 7	-2718	-5225	-131	0.051	379.8	0.928	0.7961	3.42705	No

Tabella dei coefficienti di sicurezza minimi

Stato limite	Coeff.s.	Comb.	Verifica

Stato limite	Coeff.s.	Comb.	Verifica
PF_SLU	1.642	SLU 84	Si
V_SLU	1.257	SLU 84	Si
PF_SLV	0	SLV 13	No
V_SLV	0	SLV 13	No
PFFP_SLV	31.951	SLV 7	Si
R_SLV	0.143	SLV 13	No

Maschio 11

Verifiche condotte secondo D.M. 17-01-18 (N.T.C.)

Dati geometrici

X ini.	Y ini.	X fin.	Y fin.	Quota i.	Quota.s	l	Sp.	h netta	h ini.	h fin.	a	a.s.,sx	a.s.,dx
-18.482	1.032	-18.482	-3.292	L1	L3	4.324	0.3	2.99	2.99	2.99			

Caratteristiche del materiale

(Circolare 7 21-01-19 C8.5.I) Muratura in mattoni pieni e malta di calce LC2_Corti

fb	fk	fvk0	fmedio	τ0	fv0	μ	ϕ	fv,lim	E	G	FC
600000			345000	9000	20000	0.58	0.77	32500	320000000	128000000	1.2

Verifica a pressoflessione nel piano secondo D.M. 17-01-18 NTC §7.8.2.2.1 in combinazioni non sismiche, γM = 3

Comb.	Quota	N	M	σ0	Mu	c.s.	Verifica
SLU 81	-1.67	-56491	-11367.26	43548	56840.76	5	Si
SLU 81	1.32	-46123	23692.69	35555	56192.75	2.372	Si
SLU 83	-1.67	-57088	-11712.64	44009	56744.07	4.845	Si
SLU 83	1.32	-46599	23711.47	35923	56318.89	2.375	Si
SLU 82	-1.67	-56364	-9594.65	43450	56859.39	5.926	Si
SLU 82	1.32	-45997	23767.74	35458	56157.76	2.363	Si
SLU 73	-1.67	-54063	-7743.42	41676	57083.46	7.372	Si
SLU 73	1.32	-43984	22985.56	33907	55511.8	2.415	Si
SLU 84	-1.67	-56962	-9940.03	43911	56765.79	5.711	Si
SLU 84	1.32	-46473	23786.51	35825	56286.37	2.366	Si
SLU 74	-1.67	-55224	-11130.14	42571	56997.48	5.121	Si
SLU 74	1.32	-45036	23066.54	34718	55870.05	2.422	Si
SLU 75	-1.67	-55097	-9357.54	42474	57009.54	6.092	Si
SLU 75	1.32	-44910	23141.58	34620	55829.45	2.413	Si
SLU 77	-1.67	-55822	-11475.52	43032	56931.76	4.961	Si
SLU 77	1.32	-45512	23085.31	35085	56017.38	2.427	Si
SLU 76	-1.67	-54660	-8088.8	42137	57046.13	7.052	Si
SLU 76	1.32	-44460	23004.34	34274	55679.63	2.42	Si
SLU 78	-1.67	-55695	-9702.91	42934	56946.92	5.869	Si
SLU 78	1.32	-45386	23160.36	34987	55979.24	2.417	Si

Verifica a pressoflessione nel piano secondo D.M. 17-01-18 NTC §7.8.2.2.1 in combinazioni sismiche, γM = 2

Comb.	Quota	N	M	σ0	Mu	c.s.	Verifica
SLV 10	-1.67	-38810	14353.01	29918	63362.68	4.415	Si
SLV 10	1.32	-33650	28778.78	25940	57306.62	1.991	Si
SLV 15	-1.67	-31025	-2213.19	23917	53947.14	24.375	Si
SLV 15	1.32	-22401	18807.36	17268	41586.16	2.211	Si
SLV 8	-1.67	-37586	-28645.5	28975	61992.32	2.164	Si
SLV 8	1.32	-28119	3746.36	21677	50009.2	13.349	Si
SLV 13	-1.67	-32546	8806.63	25089	55917.09	6.349	Si
SLV 13	1.32	-25324	25276.78	19522	46003.22	1.82	Si
SLV 9	-1.67	-38810	14353.01	29918	63362.68	4.415	Si
SLV 9	1.32	-33650	28778.78	25940	57306.62	1.991	Si
SLV 14	-1.67	-32546	8806.63	25089	55917.09	6.349	Si
SLV 14	1.32	-25324	25276.78	19522	46003.22	1.82	Si
SLV 6	-1.67	-42657	8087.23	32884	67405.57	8.335	Si
SLV 6	1.32	-37863	25311.08	29188	62306.06	2.462	Si
SLV 7	-1.67	-37586	-28645.5	28975	61992.32	2.164	Si
SLV 7	1.32	-28119	3746.36	21677	50009.2	13.349	Si
SLV 16	-1.67	-31025	-2213.19	23917	53947.14	24.375	Si
SLV 16	1.32	-22401	18807.36	17268	41586.16	2.211	Si
SLV 5	-1.67	-42657	8087.23	32884	67405.57	8.335	Si
SLV 5	1.32	-37863	25311.08	29188	62306.06	2.462	Si

Verifica a taglio nel piano secondo D.M. 17-01-18 (N.T.C.) §7.8.2.2.2 con rottura per scorrimento in combinazioni non sismiche, γM = 3

Comb.	Quota	N	V par	M	σ0	σN	l'	fvd	Vt scorr.	Vt fess.diag.	Vt,lim	c.s.	Verifica
SLU 83	-1.67	-57088	505	-11712.64		44009	4.324	10833	14053			27.85	Si
SLU 83	1.32	-46599	-6789	23711.47		35923	4.324	10345	13420			1.98	Si
SLU 62	-1.67	-52313	431	-10222.62		40327	4.324	10833	14053			32.58	Si
SLU 62	1.32	-42342	-6188	21966.46		32641	4.324	9908	12852			2.08	Si
SLU 56	-1.67	-51046	448	-9985.5		39351	4.324	10802	14013			31.26	Si
SLU 56	1.32	-41255	-6034	21340.3		31803	4.324	9796	12707			2.11	Si
SLU 77	-1.67	-55822	522	-11475.52		43032	4.324	10833	14053			26.94	Si
SLU 77	1.32	-45512	-6635	23085.31		35085	4.324	10234	13275			2	Si
SLU 69	-1.67	-50648	464	-9913.37		39044	4.324	10761	13960			30.11	Si
SLU 69	1.32	-41013	-5999	21143.5		31616	4.324	9771	12675			2.11	Si
SLU 60	-1.67	-51716	390	-9877.24		39867	4.324	10833	14053			36.06	Si
SLU 60	1.32	-41866	-6128	21947.68		32274	4.324	9859	12789			2.09	Si
SLU 79	-1.67	-55469	521	-11388.52		42760	4.324	10833	14053			26.95	Si
SLU 79	1.32	-45147	-6576	22898.04		34803	4.324	10196	13226			2.01	Si
SLU 74	-1.67	-55224	480	-11130.14		42571	4.324	10833	14053			29.28	Si
SLU 74	1.32	-45036	-6576	23066.54		34718	4.324	10185	13212			2.01	Si
SLU 81	-1.67	-56491	463	-11367.26		43548	4.324	10833	14053			30.35	Si
SLU 81	1.32	-46123	-6730	23692.69		35555	4.324	10296	13356			1.98	Si
SLU 53	-1.67	-50449	407	-9640.13		38890	4.324	10741	13933			34.27	Si

Comb.	Quota	N	V par	M	σ0	σN	l'	fvd	Vt scorr.	Vt fess.diag.	Vt,lim	c.s.	Verifica
SLU 53	1.32	-40779	-5974	21321.52		31436	4.324	9747	12644			2.12	Si

Verifica a taglio nel piano secondo D.M. 17-01-18 (N.T.C.) §7.8.2.2.2 con rottura per scorrimento in combinazioni sismiche, γM = 2

Comb.	Quota	N	V par	M	σ0	σN	l'	fvd	Vt scorr.	Vt fess.diag.	Vt,lim	c.s.	Verifica
SLV 9	-1.67	-38810	17862	14353.01		29918	4.324	14317	18572			1.04	Si
SLV 9	1.32	-33650	12002	28778.78		28611	3.9203	14056	16531			1.38	Si
SLV 16	-1.67	-31025	-3818	-2213.19		23917	4.324	13117	17015			4.46	Si
SLV 16	1.32	-22401	-10783	18807.36		18821	3.9673	12098	14398			1.34	Si
SLV 11	-1.67	-33739	-16637	-22379.72		26009	4.324	13535	17558			1.06	Si
SLV 11	1.32	-23906	-21770	7214.06		18429	4.324	12019	15591			0.72	No, Vu<V
SLV 7	-1.67	-37586	-17276	-28645.5		29833	4.1997	14300	18016			1.04	Si
SLV 7	1.32	-28119	-21056	3746.36		21677	4.324	12669	16434			0.78	No, Vu<V
SLV 5	-1.67	-42657	17223	8087.23		32884	4.324	14910	19342			1.12	Si
SLV 5	1.32	-37863	12716	25311.08		29188	4.324	14171	18383			1.45	Si
SLV 8	-1.67	-37586	-17276	-28645.5		29833	4.1997	14300	18016			1.04	Si
SLV 8	1.32	-28119	-21056	3746.36		21677	4.324	12669	16434			0.78	No, Vu<V
SLV 6	-1.67	-42657	17223	8087.23		32884	4.324	14910	19342			1.12	Si
SLV 6	1.32	-37863	12716	25311.08		29188	4.324	14171	18383			1.45	Si
SLV 12	-1.67	-33739	-16637	-22379.72		26009	4.324	13535	17558			1.06	Si
SLV 12	1.32	-23906	-21770	7214.06		18429	4.324	12019	15591			0.72	No, Vu<V
SLV 10	-1.67	-38810	17862	14353.01		29918	4.324	14317	18572			1.04	Si
SLV 10	1.32	-33650	12002	28778.78		28611	3.9203	14056	16531			1.38	Si
SLV 15	-1.67	-31025	-3818	-2213.19		23917	4.324	13117	17015			4.46	Si
SLV 15	1.32	-22401	-10783	18807.36		18821	3.9673	12098	14398			1.34	Si

Verifica a pressoflessione fuori piano D.M. 17-01-18 (N.T.C.)

quota -0.175 Wa 0.05 denominatore 8 γM = 2

Comb.	fd	Sa	σ0	N	M	Mc	Coeff.s.	Verifica
SLV 16	143750	0.24	23327	-30260	212.5	3672.44	17.28	Si
SLV 15	143750	0.24	23327	-30260	212.5	3672.44	17.28	Si
SLV 12	143750	0.24	23605	-30620	212.5	3705.72	17.44	Si
SLV 11	143750	0.24	23605	-30620	212.5	3705.72	17.44	Si
SLV 13	143750	0.24	25238	-32739	212.5	3896.49	18.34	Si
SLV 14	143750	0.24	25238	-32739	212.5	3896.49	18.34	Si
SLV 7	143750	0.24	25754	-33408	212.5	3954.96	18.61	Si
SLV 8	143750	0.24	25754	-33408	212.5	3954.96	18.61	Si
SLV 9	143750	0.24	29975	-38883	212.5	4401.7	20.71	Si
SLV 10	143750	0.24	29975	-38883	212.5	4401.7	20.71	Si

Verifica dei meccanismi locali di collasso con analisi cinematica lineare

forza di aggancio al piano = 0 quota mezzeria = -0.175 Wa = 0.05 Ta = 0.0498

Comb.	N top	N base	V orto	α0	M*	e*	a0*	aLim	Verifica
SLV 15	-22401	-31025	-822	0.025	2830.1	0.945	0.38715	4.54426	No
SLV 16	-22401	-31025	-822	0.025	2830.1	0.945	0.38715	4.54426	No
SLV 13	-25324	-32546	-888	0.025	3126.7	0.949	0.38944	4.54426	No
SLV 14	-25324	-32546	-888	0.025	3126.7	0.949	0.38944	4.54426	No
SLV 9	-33650	-38810	-976	0.029	3972.7	0.959	0.43336	4.18901	No
SLV 10	-33650	-38810	-976	0.029	3972.7	0.959	0.43336	4.18901	No
SLV 11	-23906	-33739	-759	0.029	2982.8	0.947	0.4429	4.18901	No
SLV 12	-23906	-33739	-759	0.029	2982.8	0.947	0.4429	4.18901	No
SLV 2	-39369	-45371	-923	0.033	4554.4	0.964	0.49326	4.54426	No
SLV 1	-39369	-45371	-923	0.033	4554.4	0.964	0.49326	4.54426	No

Tabella dei coefficienti di sicurezza minimi

Stato limite	Coeff.s.	Comb.	Verifica
PF_SLU	2.363	SLU 82	Si
V_SLU	1.977	SLU 83	Si
PF_SLV	1.82	SLV 13	Si
V_SLV	0.716	SLV 11	No
PFFP_SLV	17.282	SLV 15	Si
R_SLV	0.085	SLV 15	No

Maschio 12

Verifiche condotte secondo D.M. 17-01-18 (N.T.C.)

Dati geometrici

X ini.	Y ini.	X fin.	Y fin.	Quota i.	Quota.s	l	Sp.	h netta	h ini.	h fin.	a	a.s.,sx	a.s.,dx
-16.922	-4.717	-16.922	-3.292	L1	L3	1.425	0.45	2.99	2.99	2.99			

Caratteristiche del materiale

(Circolare 7 21-01-19 C8.5.I) Muratura in mattoni pieni e malta di calce LC2_Corti

fb	fk	fvk0	fmedio	τ0	fv0	μ	ϕ	fv,lim	E	G	FC
600000			345000	9000	20000	0.58	0.77	32500	320000000	128000000	1.2

Verifica a pressoflessione nel piano secondo D.M. 17-01-18 NTC §7.8.2.2.1 in combinazioni non sismiche, γM = 3

Comb.	Quota	N	M	σ0	Mu	c.s.	Verifica
SLU 68	-1.67	-17164	1640.54	26766	8210.55	5.005	Si
SLU 68	1.32	-5875	-1216.42	9163	3715.24	3.054	Si
SLU 13	-1.67	-14118	1481.72	22017	7340.27	4.954	Si
SLU 13	1.32	-5020	-1057.05	7829	3232.91	3.058	Si
SLU 2	-1.67	-12463	1243.14	19436	6761	5.439	Si
SLU 2	1.32	-4462	-991.81	6959	2907.8	2.932	Si
SLU 26	-1.67	-13875	1455.01	21639	7259.94	4.99	Si
SLU 26	1.32	-4966	-1048.33	7745	3202	3.054	Si

Comb.	Quota	N	M	σ0	Mu	c.s.	Verifica
SLU 65	-1.67	-17050	1633.24	26589	8182.65	5.01	Si
SLU 65	1.32	-5787	-1186	9025	3666.57	3.092	Si
SLU 55	-1.67	-17407	1667.25	27145	8269.09	4.96	Si
SLU 55	1.32	-5929	-1225.14	9246	3744.83	3.057	Si
SLU 44	-1.67	-15751	1428.67	24563	7838.32	5.486	Si
SLU 44	1.32	-5371	-1159.9	8377	3433.54	2.96	Si
SLU 47	-1.67	-15865	1435.98	24740	7870.24	5.481	Si
SLU 47	1.32	-5459	-1190.32	8514	3483.21	2.926	Si
SLU 52	-1.67	-17293	1659.95	26968	8241.95	4.965	Si
SLU 52	1.32	-5841	-1194.71	9109	3696.28	3.094	Si
SLU 5	-1.67	-12576	1250.45	19613	6803.1	5.441	Si
SLU 5	1.32	-4550	-1022.23	7096	2959.65	2.895	Si

Verifica a pressoflessione nel piano secondo D.M. 17-01-18 NTC §7.8.2.2.1 in combinazioni sismiche, γM = 2

Comb.	Quota	N	M	σ0	Mu	c.s.	Verifica
SLV 9	-1.67	-20822	904.54	32472	10892.92	12.042	Si
SLV 9	1.32	3728	2632.04	0	0	0	No, Trazione
SLV 12	-1.67	-4731	2331.25	7378	3167.34	1.359	Si
SLV 12	1.32	-8720	-2554.92	13599	5521.36	2.161	Si
SLV 5	-1.67	-21782	-377.73	33969	11204.96	29.664	Si
SLV 5	1.32	1203	1339.86	0	0	0	No, Trazione
SLV 15	-1.67	-9243	3327.89	14415	5808.7	1.745	Si
SLV 15	1.32	-1417	768.05	2210	991.29	1.291	Si
SLV 10	-1.67	-20822	904.54	32472	10892.92	12.042	Si
SLV 10	1.32	3728	2632.04	0	0	0	No, Trazione
SLV 13	-1.67	-14070	2899.88	21943	8224.69	2.836	Si
SLV 13	1.32	2317	2324.14	0	0	0	No, Trazione
SLV 6	-1.67	-21782	-377.73	33969	11204.96	29.664	Si
SLV 6	1.32	1203	1339.86	0	0	0	No, Trazione
SLV 16	-1.67	-9243	3327.89	14415	5808.7	1.745	Si
SLV 16	1.32	-1417	768.05	2210	991.29	1.291	Si
SLV 14	-1.67	-14070	2899.88	21943	8224.69	2.836	Si
SLV 14	1.32	2317	2324.14	0	0	0	No, Trazione
SLV 11	-1.67	-4731	2331.25	7378	3167.34	1.359	Si
SLV 11	1.32	-8720	-2554.92	13599	5521.36	2.161	Si

Verifica a taglio nel piano secondo D.M. 17-01-18 (N.T.C.) §7.8.2.2.2 con rottura per scorrimento in combinazioni non sismiche, γM = 3

Comb.	Quota	N	V par	M	σ0	σN	I'	fvd	Vt scorr.	Vt fess.diag.	Vt,lim	c.s.	Verifica
SLU 52	-1.67	-17293	332	1659.95		26968	1.425	9151	5868			17.65	Si
SLU 52	1.32	-5841	1126	-1194.71		9109	1.425	6770	4341			3.86	Si
SLU 31	-1.67	-15304	343	1678.98		23866	1.425	8738	5603			16.35	Si
SLU 31	1.32	-5348	1060	-1052.73		8340	1.425	6668	4275			4.03	Si
SLU 34	-1.67	-15417	347	1686.29		24043	1.425	8761	5618			16.2	Si
SLU 34	1.32	-5436	1071	-1083.15		8477	1.425	6686	4287			4	Si
SLU 44	-1.67	-15751	336	1428.67		24563	1.425	8831	5663			16.83	Si
SLU 44	1.32	-5371	1050	-1159.9		8377	1.425	6672	4279			4.07	Si
SLU 73	-1.67	-18592	330	1864.51		28994	1.425	9421	6041			18.3	Si
SLU 73	1.32	-6257	1191	-1220.82		9758	1.425	6857	4397			3.69	Si
SLU 76	-1.67	-18706	334	1871.82		29171	1.425	9445	6057			18.12	Si
SLU 76	1.32	-6345	1202	-1251.24		9895	1.425	6875	4408			3.67	Si
SLU 65	-1.67	-17050	334	1633.24		26589	1.425	9101	5836			17.47	Si
SLU 65	1.32	-5787	1115	-1186		9025	1.425	6759	4334			3.89	Si
SLU 47	-1.67	-15865	341	1435.98		24740	1.425	8854	5678			16.67	Si
SLU 47	1.32	-5459	1062	-1190.32		8514	1.425	6691	4290			4.04	Si
SLU 55	-1.67	-17407	337	1667.25		27145	1.425	9175	5883			17.48	Si
SLU 55	1.32	-5929	1137	-1225.14		9246	1.425	6788	4353			3.83	Si
SLU 68	-1.67	-17164	338	1640.54		26766	1.425	9124	5851			17.3	Si
SLU 68	1.32	-5875	1127	-1216.42		9163	1.425	6777	4346			3.86	Si

Verifica a taglio nel piano secondo D.M. 17-01-18 (N.T.C.) §7.8.2.2.2 con rottura per scorrimento in combinazioni sismiche, γM = 2

Comb.	Quota	N	V par	M	σ0	σN	I'	fvd	Vt scorr.	Vt fess.diag.	Vt,lim	c.s.	Verifica
SLV 6	-1.67	-21782	-1485	-377.73		33969	1.425	15127	9700			6.53	Si
SLV 6	1.32	1203	33	1339.86		0	0	8333	0			0	No, Vu<V
SLV 4	-1.67	-12443	801	-946.36		19404	1.425	12214	7832			9.77	Si
SLV 4	1.32	-9834	2529	-3539.2		20660	1.0578	12465	5934			2.35	Si
SLV 13	-1.67	-14070	-894	2899.88		21943	1.425	12722	8158			9.12	Si
SLV 13	1.32	2317	-1430	2324.14		0	0	8333	0			0	No, Vu<V
SLV 5	-1.67	-21782	-1485	-377.73		33969	1.425	15127	9700			6.53	Si
SLV 5	1.32	1203	33	1339.86		0	0	8333	0			0	No, Vu<V
SLV 14	-1.67	-14070	-894	2899.88		21943	1.425	12722	8158			9.12	Si
SLV 14	1.32	2317	-1430	2324.14		0	0	8333	0			0	No, Vu<V
SLV 3	-1.67	-12443	801	-946.36		19404	1.425	12214	7832			9.77	Si
SLV 3	1.32	-9834	2529	-3539.2		20660	1.0578	12465	5934			2.35	Si
SLV 9	-1.67	-20822	-1714	904.54		32472	1.425	14828	9508			5.55	Si
SLV 9	1.32	3728	-971	2632.04		0	0	8333	0			0	No, Vu<V
SLV 10	-1.67	-20822	-1714	904.54		32472	1.425	14828	9508			5.55	Si
SLV 10	1.32	3728	-971	2632.04		0	0	8333	0			0	No, Vu<V
SLV 12	-1.67	-4731	1392	2331.25		15948	0.6592	11523	3418			2.46	Si
SLV 12	1.32	-8720	1065	-2554.92		15398	1.2585	11413	6463			6.07	Si
SLV 11	-1.67	-4731	1392	2331.25		15948	0.6592	11523	3418			2.46	Si
SLV 11	1.32	-8720	1065	-2554.92		15398	1.2585	11413	6463			6.07	Si

Verifica a pressoflessione fuori piano D.M. 17-01-18 (N.T.C.)

quota -0.175 Wa 0.08 denominatore 8 γM = 2

Comb.	fd	Sa	σ0	N	M	Mc	Coeff.s.	Verifica
SLV 11	143750	0.24	5984	-3837	105.04	821.04	7.82	Si
SLV 12	143750	0.24	5984	-3837	105.04	821.04	7.82	Si
SLV 8	143750	0.24	7017	-4499	105.04	954.23	9.08	Si
SLV 7	143750	0.24	7017	-4499	105.04	954.23	9.08	Si

Comb.	fd	Sa	σ0	N	M	Mc	Coeff.s.	Verifica
SLV 16	143750	0.24	12072	-7741	105.04	1569.71	14.94	Si
SLV 15	143750	0.24	12072	-7741	105.04	1569.71	14.94	Si
SLV 3	143750	0.24	15516	-9949	105.04	1954.34	18.6	Si
SLV 4	143750	0.24	15516	-9949	105.04	1954.34	18.6	Si
SLV 13	143750	0.24	18324	-11750	105.04	2247.33	21.39	Si
SLV 14	143750	0.24	18324	-11750	105.04	2247.33	21.39	Si

Verifica dei meccanismi locali di collasso con analisi cinematica lineare

forza di aggancio al piano = 0 quota mezzeria = -0.175 Wa = 0.08 Ta = 0.0332

Comb.	N top	N base	V orto	α0	M*	e*	a0*	aLim	Verifica
SLV 13	2317	-14070	591	0	0	0	0	3.6078	No, Trazione
SLV 7	-11245	-5691	-1423	0	1416.4	0.945	0	3.42705	No
SLV 12	-8720	-4731	-1177	0	1160.6	0.935	0	3.42705	No
SLV 6	1203	-21782	856	0	0	0	0	3.42705	No, Trazione
SLV 5	1203	-21782	856	0	0	0	0	3.42705	No, Trazione
SLV 8	-11245	-5691	-1423	0	1416.4	0.945	0	3.42705	No
SLV 14	2317	-14070	591	0	0	0	0	3.6078	No, Trazione
SLV 9	3728	-20822	1102	0	0	0	0	3.42705	No, Trazione
SLV 10	3728	-20822	1102	0	0	0	0	3.42705	No, Trazione
SLV 11	-8720	-4731	-1177	0	1160.6	0.935	0	3.42705	No

Tabella dei coefficienti di sicurezza minimi

Stato limite	Coeff.s.	Comb.	Verifica
PF_SLU	2.895	SLU 5	Si
V_SLU	3.668	SLU 76	Si
PF_SLV	0	SLV 14	No
V_SLV	0	SLV 5	No
PFFP_SLV	7.816	SLV 11	Si
R_SLV	0	SLV 14	No

Maschio 13

Verifiche condotte secondo D.M. 17-01-18 (N.T.C.)

Dati geometrici

X ini.	Y ini.	X fin.	Y fin.	Quota i.	Quota.s	l	Sp.	h netta	h ini.	h fin.	a	a.s.,sx	a.s.,dx
-13.757	-4.717	-16.922	-4.717	L1	L3	3.166	0.45	2.99	2.99	2.99			

Caratteristiche del materiale

(Circolare 7 21-01-19 C8.5.I) Muratura in mattoni pieni e malta di calce LC2_Corti

fb	fk	fvk0	fmedio	τ0	fv0	μ	ϕ	fv,lim	E	G	FC
600000			345000	9000	20000	0.58	0.77	32500	320000000	128000000	1.2

Verifica a pressoflessione nel piano secondo D.M. 17-01-18 NTC §7.8.2.2.1 in combinazioni non sismiche, γM = 3

Comb.	Quota	N	M	σ0	Mu	c.s.	Verifica
SLU 5	-1.67	-24235	-4556.34	17013	30347.29	6.66	Si
SLU 5	1.32	-16226	-9932.11	11391	22091.45	2.224	Si
SLU 65	-1.67	-33040	-6191.8	23194	37404.61	6.041	Si
SLU 65	1.32	-22689	-13137.5	15928	28890.11	2.199	Si
SLU 55	-1.67	-33907	-6453.14	23803	37985.28	5.886	Si
SLU 55	1.32	-23441	-13491.44	16456	29606.82	2.194	Si
SLU 44	-1.67	-31171	-5645.2	21882	36083.53	6.392	Si
SLU 44	1.32	-20765	-12408.75	14577	26984.66	2.175	Si
SLU 68	-1.67	-33256	-6225.44	23345	37551	6.032	Si
SLU 68	1.32	-22877	-13155.31	16059	29070.18	2.21	Si
SLU 47	-1.67	-31387	-5678.85	22034	36240.92	6.382	Si
SLU 47	1.32	-20952	-12426.56	14708	27174.57	2.187	Si
SLU 2	-1.67	-24019	-4522.7	16862	30147.81	6.666	Si
SLU 2	1.32	-16039	-9914.31	11259	21877.4	2.207	Si
SLU 76	-1.67	-35776	-6999.73	25115	39166.89	5.595	Si
SLU 76	1.32	-25366	-14220.19	17807	31371.75	2.206	Si
SLU 52	-1.67	-33691	-6419.49	23651	37842.73	5.895	Si
SLU 52	1.32	-23254	-13473.63	16324	29429.63	2.184	Si
SLU 73	-1.67	-35560	-6966.08	24963	39035.33	5.604	Si
SLU 73	1.32	-25178	-14202.38	17675	31204.4	2.197	Si

Verifica a pressoflessione nel piano secondo D.M. 17-01-18 NTC §7.8.2.2.1 in combinazioni sismiche, γM = 2

Comb.	Quota	N	M	σ0	Mu	c.s.	Verifica
SLV 3	-1.67	-32236	2021.96	22629	41572.55	20.56	Si
SLV 3	1.32	-23247	-18396.02	16319	31880.51	1.733	Si
SLV 15	-1.67	-9064	-10255.89	6363	13598.63	1.326	Si
SLV 15	1.32	-2208	291.88	1550	3450.91	11.823	Si
SLV 11	-1.67	-1822	-4496.12	0	0	0	No, e>l/2
SLV 11	1.32	5560	-4830.06	0	0	0	No, Trazione
SLV 4	-1.67	-32236	2021.96	22629	41572.55	20.56	Si
SLV 4	1.32	-23247	-18396.02	16319	31880.51	1.733	Si
SLV 2	-1.67	-45394	768.37	31867	53110.5	69.121	Si
SLV 2	1.32	-36217	-19612.16	25424	45395.58	2.315	Si
SLV 12	-1.67	-1822	-4496.12	0	0	0	No, e>l/2
SLV 12	1.32	5560	-4830.06	0	0	0	No, Trazione
SLV 8	-1.67	-8774	-812.76	6159	13187.3	16.225	Si
SLV 8	1.32	-752	-10436.43	0	0	0	No, e>l/2
SLV 1	-1.67	-45394	768.37	31867	53110.5	69.121	Si
SLV 1	1.32	-36217	-19612.16	25424	45395.58	2.315	Si
SLV 7	-1.67	-8774	-812.76	6159	13187.3	16.225	Si
SLV 7	1.32	-752	-10436.43	0	0	0	No, e>l/2

Comb.	Quota	N	M	σ0	Mu	c.s.	Verifica
SLV 16	-1.67	-9064	-10255.89	6363	13598.63	1.326	Si
SLV 16	1.32	-2208	291.88	1550	3450.91	11.823	Si

Verifica a taglio nel piano secondo D.M. 17-01-18 (N.T.C.) §7.8.2.2.2 con rottura per scorrimento in combinazioni non sismiche, γM = 3

Comb.	Quota	N	V par	M	σ0	σN	l'	fvd	Vt scorr.	Vt fess.diag.	Vt,lim	c.s.	Verifica
SLU 76	-1.67	-35776	7659	-6999.73		25115	3.1656	8904	12684			1.66	Si
SLU 76	1.32	-25366	3470	-14220.19		18382	3.0665	8006	11048			3.18	Si
SLU 73	-1.67	-35560	7641	-6966.08		24963	3.1656	8884	12655			1.66	Si
SLU 73	1.32	-25178	3473	-14202.38		18308	3.0561	7997	10997			3.17	Si
SLU 77	-1.67	-38016	7836	-6920.24		26687	3.1656	9114	12983			1.66	Si
SLU 77	1.32	-27539	3255	-13526.38		19332	3.1656	8133	11586			3.56	Si
SLU 78	-1.67	-36843	7760	-7014.04		25864	3.1656	9004	12826			1.65	Si
SLU 78	1.32	-26392	3392	-13986.36		18568	3.1585	8031	11415			3.37	Si
SLU 75	-1.67	-36627	7741	-6980.39		25712	3.1656	8984	12798			1.65	Si
SLU 75	1.32	-26204	3395	-13968.55		18491	3.1491	8021	11367			3.35	Si
SLU 74	-1.67	-37801	7818	-6886.59		26536	3.1656	9094	12954			1.66	Si
SLU 74	1.32	-27352	3258	-13508.57		19201	3.1656	8116	11561			3.55	Si
SLU 82	-1.67	-37422	7992	-7235.39		26270	3.1656	9058	12904			1.61	Si
SLU 82	1.32	-27010	3507	-14352.11		19029	3.1542	8093	11487			3.28	Si
SLU 84	-1.67	-37638	8010	-7269.03		26422	3.1656	9078	12932			1.61	Si
SLU 84	1.32	-27197	3503	-14369.91		19106	3.1633	8103	11534			3.29	Si
SLU 81	-1.67	-38596	8069	-7141.58		27094	3.1656	9168	13060			1.62	Si
SLU 81	1.32	-28157	3370	-13892.13		19766	3.1656	8191	11668			3.46	Si
SLU 83	-1.67	-38811	8087	-7175.23		27246	3.1656	9188	13089			1.62	Si
SLU 83	1.32	-28345	3367	-13909.93		19898	3.1656	8209	11693			3.47	Si

Verifica a taglio nel piano secondo D.M. 17-01-18 (N.T.C.) §7.8.2.2.2 con rottura per scorrimento in combinazioni sismiche, γM = 2

Comb.	Quota	N	V par	M	σ0	σN	l'	fvd	Vt scorr.	Vt fess.diag.	Vt,lim	c.s.	Verifica
SLV 4	-1.67	-32236	10573	2021.96		22629	3.1656	12859	18318			1.73	Si
SLV 4	1.32	-23247	9525	-18396.02		21758	2.3743	12685	13553			1.42	Si
SLV 8	-1.67	-8774	1603	-812.76		6159	3.1656	9565	13626			8.5	Si
SLV 8	1.32	-752	3656	-10436.43		0	0	8333	0			0	No, Vu<V
SLV 6	-1.67	-52635	13560	-4991.4		36950	3.1656	15723	22398			1.65	Si
SLV 6	1.32	-43985	5458	-14490.22		30877	3.1656	14509	20668			3.79	Si
SLV 5	-1.67	-52635	13560	-4991.4		36950	3.1656	15723	22398			1.65	Si
SLV 5	1.32	-43985	5458	-14490.22		30877	3.1656	14509	20668			3.79	Si
SLV 11	-1.67	-1822	-2499	-4496.12		0	0	8333	0			0	No, Vu<V
SLV 11	1.32	5560	-833	-4830.06		0	0	8333	0			0	No, Vu<V
SLV 3	-1.67	-32236	10573	2021.96		22629	3.1656	12859	18318			1.73	Si
SLV 3	1.32	-23247	9525	-18396.02		21758	2.3743	12685	13553			1.42	Si
SLV 1	-1.67	-45394	14160	768.37		31867	3.1656	14707	20950			1.48	Si
SLV 1	1.32	-36217	10065	-19612.16		25764	3.1238	13486	18957			1.88	Si
SLV 12	-1.67	-1822	-2499	-4496.12		0	0	8333	0			0	No, Vu<V
SLV 12	1.32	5560	-833	-4830.06		0	0	8333	0			0	No, Vu<V
SLV 7	-1.67	-8774	1603	-812.76		6159	3.1656	9565	13626			8.5	Si
SLV 7	1.32	-752	3656	-10436.43		0	0	8333	0			0	No, Vu<V
SLV 2	-1.67	-45394	14160	768.37		31867	3.1656	14707	20950			1.48	Si
SLV 2	1.32	-36217	10065	-19612.16		25764	3.1238	13486	18957			1.88	Si

Verifica a pressoflessione fuori piano D.M. 17-01-18 (N.T.C.)

quota -0.175 Wa 0.08 denominatore 8 γM = 2

Comb.	fd	Sa	σ0	N	M	Mc	Coeff.s.	Verifica
SLV 12	143750	0.24	0	331	233.36	0	0	No, Trazione
SLV 11	143750	0.24	0	331	233.36	0	0	No, Trazione
SLV 15	143750	0.24	3211	-4574	233.36	1002.01	4.29	Si
SLV 16	143750	0.24	3211	-4574	233.36	1002.01	4.29	Si
SLV 7	143750	0.24	4847	-6904	233.36	1491.83	6.39	Si
SLV 8	143750	0.24	4847	-6904	233.36	1491.83	6.39	Si
SLV 14	143750	0.24	11241	-16013	233.36	3271.42	14.02	Si
SLV 13	143750	0.24	11241	-16013	233.36	3271.42	14.02	Si
SLV 4	143750	0.24	20141	-28691	233.36	5391.4	23.1	Si
SLV 3	143750	0.24	20141	-28691	233.36	5391.4	23.1	Si

Verifica dei meccanismi locali di collasso con analisi cinematica lineare

forza di aggancio al piano = 0 quota mezzeria = -0.175 Wa = 0.08 Ta = 0.0332

Comb.	N top	N base	V orto	α0	M*	e*	a0*	aLim	Verifica
SLV 12	5560	-1822	-1431	0	0	0	0	3.42705	No, Trazione
SLV 11	5560	-1822	-1431	0	0	0	0	3.42705	No, Trazione
SLV 7	-752	-8774	-1176	0	803.1	0.936	0	3.42705	No
SLV 8	-752	-8774	-1176	0	803.1	0.936	0	3.42705	No
SLV 15	-2208	-9064	-653	0.015	902	0.896	0.24282	3.6078	No
SLV 16	-2208	-9064	-653	0.015	902	0.896	0.24282	3.6078	No
SLV 5	-43985	-52635	1899	0.042	5077.9	0.964	0.62647	3.42705	No
SLV 6	-43985	-52635	1899	0.042	5077.9	0.964	0.62647	3.42705	No
SLV 9	-37673	-45684	1644	0.043	4435.9	0.96	0.64507	3.42705	No
SLV 10	-37673	-45684	1644	0.043	4435.9	0.96	0.64507	3.42705	No

Tabella dei coefficienti di sicurezza minimi

Stato limite	Coeff.s.	Comb.	Verifica
PF_SLU	2.175	SLU 44	Si
V_SLU	1.615	SLU 84	Si
PF_SLV	0	SLV 12	No
V_SLV	0	SLV 7	No
PFFP_SLV	0	SLV 12	No
R_SLV	0	SLV 12	No

Maschio 14

Verifiche condotte secondo D.M. 17-01-18 (N.T.C.)

Dati geometrici

X ini.	Y ini.	X fin.	Y fin.	Quota i.	Quota.s	l	Sp.	h netta	h ini.	h fin.	a	a.s.,sx	a.s.,dx
-15.058	2.271	-15.058	6.565	L1	L3	4.294	0.3	2.99	2.99	2.99			

Caratteristiche del materiale

(Circolare 7 21-01-19 C8.5.I) Muratura in mattoni pieni e malta di calce LC2_Corti

fb	fk	fvk0	fmedio	τ0	fv0	μ	ϕ	fv,lim	E	G	FC
600000			345000	9000	20000	0.58	0.77	32500	320000000	128000000	1.2

Verifica a pressoflessione nel piano secondo D.M. 17-01-18 NTC §7.8.2.2.1 in combinazioni non sismiche, γM = 3

Comb.	Quota	N	M	σ0	Mu	c.s.	Verifica
SLU 83	-1.67	-60740	-12651.74	47153	54916.55	4.341	Si
SLU 83	1.32	-37468	-7863.35	29087	51715.98	6.577	Si
SLU 84	-1.67	-60715	-12635.02	47135	54924.77	4.347	Si
SLU 84	1.32	-37448	-7841.96	29072	51703.98	6.593	Si
SLU 75	-1.67	-58789	-12155.51	45639	55499.4	4.566	Si
SLU 75	1.32	-36134	-7503.32	28051	50861.13	6.778	Si
SLU 82	-1.67	-59994	-12475.14	46575	55157.57	4.421	Si
SLU 82	1.32	-36898	-7740.21	28644	51359.61	6.635	Si
SLU 74	-1.67	-58813	-12172.22	45657	55493.1	4.559	Si
SLU 74	1.32	-36153	-7524.71	28067	50874.18	6.761	Si
SLU 81	-1.67	-60019	-12491.85	46594	55150.06	4.415	Si
SLU 81	1.32	-36917	-7761.6	28660	51372.05	6.619	Si
SLU 79	-1.67	-59112	-12201.48	45890	55413.54	4.542	Si
SLU 79	1.32	-36390	-7538.54	28250	51030.75	6.769	Si
SLU 80	-1.67	-59088	-12184.77	45871	55420.14	4.548	Si
SLU 80	1.32	-36370	-7517.15	28235	51017.89	6.787	Si
SLU 77	-1.67	-59534	-12332.11	46217	55295.17	4.484	Si
SLU 77	1.32	-36704	-7626.46	28494	51235.31	6.718	Si
SLU 78	-1.67	-59510	-12315.39	46198	55302.19	4.49	Si
SLU 78	1.32	-36684	-7605.07	28479	51222.7	6.735	Si

Verifica a pressoflessione nel piano secondo D.M. 17-01-18 NTC §7.8.2.2.1 in combinazioni sismiche, γM = 2

Comb.	Quota	N	M	σ0	Mu	c.s.	Verifica
SLV 11	-1.67	-27533	27816.92	21374	48769.41	1.753	Si
SLV 11	1.32	-22429	959.32	17412	41290.55	43.041	Si
SLV 9	-1.67	-47481	-41535.75	36861	71185.43	1.714	Si
SLV 9	1.32	-21558	-9143.08	16736	39943.18	4.369	Si
SLV 7	-1.67	-33660	25229.98	26131	56810.03	2.252	Si
SLV 7	1.32	-27444	-770.08	21305	48645.37	63.17	Si
SLV 5	-1.67	-53609	-44122.68	41618	75891.34	1.72	Si
SLV 5	1.32	-26573	-10872.48	20629	47417.16	4.361	Si
SLV 10	-1.67	-47481	-41535.75	36861	71185.43	1.714	Si
SLV 10	1.32	-21558	-9143.08	16736	39943.18	4.369	Si
SLV 8	-1.67	-33660	25229.98	26131	56810.03	2.252	Si
SLV 8	1.32	-27444	-770.08	21305	48645.37	63.17	Si
SLV 6	-1.67	-53609	-44122.68	41618	75891.34	1.72	Si
SLV 6	1.32	-26573	-10872.48	20629	47417.16	4.361	Si
SLV 12	-1.67	-27533	27816.92	21374	48769.41	1.753	Si
SLV 12	1.32	-22429	959.32	17412	41290.55	43.041	Si
SLV 2	-1.67	-53776	-22867.34	41747	76005.09	3.324	Si
SLV 2	1.32	-32728	-9354.27	25408	55653.26	5.95	Si
SLV 1	-1.67	-53776	-22867.34	41747	76005.09	3.324	Si
SLV 1	1.32	-32728	-9354.27	25408	55653.26	5.95	Si

Verifica a taglio nel piano secondo D.M. 17-01-18 (N.T.C.) §7.8.2.2.2 con rottura per scorrimento in combinazioni non sismiche, γM = 3

Comb.	Quota	N	V par	M	σ0	σN	l'	fvd	Vt scorr.	Vt fess.diag.	Vt,lim	c.s.	Verifica
SLU 78	-1.67	-59510	1731	-12315.39		46198	4.2938	10833	13955			8.06	Si
SLU 78	1.32	-36684	4462	-7605.07		28479	4.2938	9353	12048			2.7	Si
SLU 84	-1.67	-60715	1769	-12635.02		47135	4.2938	10833	13955			7.89	Si
SLU 84	1.32	-37448	4539	-7841.96		29072	4.2938	9432	12149			2.68	Si
SLU 77	-1.67	-59534	1739	-12332.11		46217	4.2938	10833	13955			8.03	Si
SLU 77	1.32	-36704	4470	-7626.46		28494	4.2938	9355	12050			2.7	Si
SLU 83	-1.67	-60740	1777	-12651.74		47153	4.2938	10833	13955			7.85	Si
SLU 83	1.32	-37468	4547	-7863.35		29087	4.2938	9434	12152			2.67	Si
SLU 75	-1.67	-58789	1700	-12155.51		45639	4.2938	10833	13955			8.21	Si
SLU 75	1.32	-36134	4387	-7503.32		28051	4.2938	9296	11974			2.73	Si
SLU 79	-1.67	-59112	1720	-12201.48		45890	4.2938	10833	13955			8.11	Si
SLU 79	1.32	-36390	4429	-7538.54		28250	4.2938	9322	12008			2.71	Si
SLU 81	-1.67	-60019	1746	-12491.85		46594	4.2938	10833	13955			7.99	Si
SLU 81	1.32	-36917	4472	-7761.6		28660	4.2938	9377	12079			2.7	Si
SLU 74	-1.67	-58813	1708	-12172.22		45657	4.2938	10833	13955			8.17	Si
SLU 74	1.32	-36153	4395	-7524.71		28067	4.2938	9298	11977			2.73	Si
SLU 82	-1.67	-59994	1738	-12475.14		46575	4.2938	10833	13955			8.03	Si
SLU 82	1.32	-36898	4465	-7740.21		28644	4.2938	9375	12076			2.7	Si
SLU 80	-1.67	-59088	1712	-12184.77		45871	4.2938	10833	13955			8.15	Si
SLU 80	1.32	-36370	4421	-7517.15		28235	4.2938	9320	12006			2.72	Si

Verifica a taglio nel piano secondo D.M. 17-01-18 (N.T.C.) §7.8.2.2.2 con rottura per scorrimento in combinazioni sismiche, γM = 2

Comb.	Quota	N	V par	M	σ0	σN	l'	fvd	Vt scorr.	Vt fess.diag.	Vt,lim	c.s.	Verifica
SLV 5	-1.67	-53609	-16875	-44122.68		44995	3.9715	16250	19361			1.15	Si
SLV 5	1.32	-26573	-17160	-10872.48		20629	4.2938	12459	16049			0.94	No, Vu<V
SLV 4	-1.67	-47791	8150	-2061.55		37101	4.2938	15754	20293			2.49	Si
SLV 4	1.32	-32990	14028	-6323.55		25610	4.2938	13455	17332			1.24	Si
SLV 11	-1.67	-27533	19140	27816.92		26916	3.4097	13717	14031			0.73	No, Vu<V

Comb.	Quota	N	V par	M	σ0	σN	l'	fvd	Vt scorr.	Vt fess.diag.	Vt,lim	c.s.	Verifica
SLV 11	1.32	-22429	23115	959.32		17412	4.2938	11816	15220			0.66	No, Vu<V
SLV 8	-1.67	-33660	20029	25229.98		26765	4.192	13686	17212			0.86	No, Vu<V
SLV 8	1.32	-27444	25873	-770.08		21305	4.2938	12594	16223			0.63	No, Vu<V
SLV 9	-1.67	-47481	-17763	-41535.75		41472	3.8163	16250	18605			1.05	Si
SLV 9	1.32	-21558	-19918	-9143.08		16736	4.2938	11680	15046			0.76	No, Vu<V
SLV 10	-1.67	-47481	-17763	-41535.75		41472	3.8163	16250	18605			1.05	Si
SLV 10	1.32	-21558	-19918	-9143.08		16736	4.2938	11680	15046			0.76	No, Vu<V
SLV 6	-1.67	-53609	-16875	-44122.68		44995	3.9715	16250	19361			1.15	Si
SLV 6	1.32	-26573	-17160	-10872.48		20629	4.2938	12459	16049			0.94	No, Vu<V
SLV 7	-1.67	-33660	20029	25229.98		26765	4.192	13686	17212			0.86	No, Vu<V
SLV 7	1.32	-27444	25873	-770.08		21305	4.2938	12594	16223			0.63	No, Vu<V
SLV 3	-1.67	-47791	8150	-2061.55		37101	4.2938	15754	20293			2.49	Si
SLV 3	1.32	-32990	14028	-6323.55		25610	4.2938	13455	17332			1.24	Si
SLV 12	-1.67	-27533	19140	27816.92		26916	3.4097	13717	14031			0.73	No, Vu<V
SLV 12	1.32	-22429	23115	959.32		17412	4.2938	11816	15220			0.66	No, Vu<V

Verifica a pressoflessione fuori piano D.M. 17-01-18 (N.T.C.)

quota -0.175 Wa 0.05 denominatore 8 γM = 2

Comb.	fd	Sa	σ0	N	M	Mc	Coeff.s.	Verifica
SLV 15	143750	0.24	18094	-23307	211.02	2978.38	14.11	Si
SLV 16	143750	0.24	18094	-23307	211.02	2978.38	14.11	Si
SLV 12	143750	0.24	20189	-26006	211.02	3256.35	15.43	Si
SLV 11	143750	0.24	20189	-26006	211.02	3256.35	15.43	Si
SLV 13	143750	0.24	20448	-26339	211.02	3289.72	15.59	Si
SLV 14	143750	0.24	20448	-26339	211.02	3289.72	15.59	Si
SLV 7	143750	0.24	24338	-31351	211.02	3765.94	17.85	Si
SLV 8	143750	0.24	24338	-31351	211.02	3765.94	17.85	Si
SLV 10	143750	0.24	28035	-36113	211.02	4174.03	19.78	Si
SLV 9	143750	0.24	28035	-36113	211.02	4174.03	19.78	Si

Verifica dei meccanismi locali di collasso con analisi cinematica lineare

forza di aggancio al piano = 0 quota mezzeria = -0.175 Wa = 0.05 Ta = 0.0498

Comb.	N top	N base	V orto	α0	M*	e*	a0*	aLim	Verifica
SLV 13	-16012	-33350	994	0.008	2179.5	0.932	0.12582	4.54426	No
SLV 14	-16012	-33350	994	0.008	2179.5	0.932	0.12582	4.54426	No
SLV 16	-16273	-27366	982	0.009	2205.9	0.933	0.14392	4.54426	No
SLV 15	-16273	-27366	982	0.009	2205.9	0.933	0.14392	4.54426	No
SLV 10	-21558	-47481	1029	0.016	2740.7	0.944	0.24665	4.18901	No
SLV 9	-21558	-47481	1029	0.016	2740.7	0.944	0.24665	4.18901	No
SLV 11	-22429	-27533	988	0.019	2829	0.945	0.28772	4.18901	No
SLV 12	-22429	-27533	988	0.019	2829	0.945	0.28772	4.18901	No
SLV 5	-26573	-53609	1046	0.021	3249.6	0.951	0.32277	4.18901	No
SLV 6	-26573	-53609	1046	0.021	3249.6	0.951	0.32277	4.18901	No

Tabella dei coefficienti di sicurezza minimi

Stato limite	Coeff.s.	Comb.	Verifica
PF_SLU	4.341	SLU 83	Si
V_SLU	2.673	SLU 83	Si
PF_SLV	1.714	SLV 9	Si
V_SLV	0.627	SLV 7	No
PFFP_SLV	14.114	SLV 15	Si
R_SLV	0.028	SLV 13	No

Maschio 15

Verifiche condotte secondo D.M. 17-01-18 (N.T.C.)

Dati geometrici

X ini.	Y ini.	X fin.	Y fin.	Quota i.	Quota.s	l	Sp.	h netta	h ini.	h fin.	a	a.s.,sx	a.s.,dx
-13.757	-4.717	-13.757	-3.315	L1	L2	1.402	0.45	2.25	2.25	2.25			

Caratteristiche del materiale

(Circolare 7 21-01-19 C8.5.I) Muratura in mattoni pieni e malta di calce LC2_Corti

fb	fk	fvk0	fmedio	τ0	fv0	μ	ϕ	fv,lim	E	G	FC
600000			345000	9000	20000	0.58	0.77	32500	320000000	128000000	1.2

Verifica a pressoflessione nel piano secondo D.M. 17-01-18 NTC §7.8.2.2.1 in combinazioni non sismiche, γM = 3

Comb.	Quota	N	M	σ0	Mu	c.s.	Verifica
SLU 79	-1.67	-29990	729.5	47549	8748.67	11.993	Si
SLU 79	0.58	-22652	-1354.67	35914	8875.28	6.552	Si
SLU 83	-1.67	-30915	768.46	49016	8628.41	11.228	Si
SLU 83	0.58	-23339	-1374.53	37004	8925.79	6.494	Si
SLU 62	-1.67	-28893	648.25	45810	8861	13.669	Si
SLU 62	0.58	-21777	-1327.76	34528	8792.4	6.622	Si
SLU 71	-1.67	-27332	609.89	43336	8964.2	14.698	Si
SLU 71	0.58	-20604	-1298.85	32667	8648.42	6.659	Si
SLU 64	-1.67	-26905	585.27	42658	8980.87	15.345	Si
SLU 64	0.58	-20223	-1290.73	32064	8593.67	6.658	Si
SLU 81	-1.67	-30702	756.14	48678	8658.25	11.451	Si
SLU 81	0.58	-23149	-1370.47	36703	8913.1	6.504	Si
SLU 74	-1.67	-29891	724.59	47393	8760.12	12.09	Si
SLU 74	0.58	-22552	-1349.82	35757	8866.94	6.569	Si
SLU 58	-1.67	-27968	609.3	44343	8930.21	14.656	Si
SLU 58	0.58	-21090	-1307.89	33438	8712.6	6.662	Si
SLU 60	-1.67	-28679	635.94	45471	8879.05	13.962	Si
SLU 60	0.58	-21587	-1323.7	34226	8771.6	6.627	Si

Comb.	Quota	N	M	σ0	Mu	c.s.	Verifica
SLU 77	-1.67	-30105	736.9	47732	8735.01	11.854	Si
SLU 77	0.58	-22743	-1353.88	36059	8882.72	6.561	Si

Verifica a pressoflessione nel piano secondo D.M. 17-01-18 NTC §7.8.2.2.1 in combinazioni sismiche, γM = 2

Comb.	Quota	N	M	σ0	Mu	c.s.	Verifica
SLV 6	-1.67	-32034	-1474.05	50790	13117.56	8.899	Si
SLV 6	0.58	-25837	-2338.8	40964	12035.88	5.146	Si
SLV 7	-1.67	-7973	2208.99	12642	5009.43	2.268	Si
SLV 7	0.58	-5165	53.36	8190	3377.25	63.293	Si
SLV 2	-1.67	-21262	-396.13	33710	10789.15	27.236	Si
SLV 2	0.58	-17909	-1837.97	28394	9633.7	5.241	Si
SLV 1	-1.67	-21262	-396.13	33710	10789.15	27.236	Si
SLV 1	0.58	-17909	-1837.97	28394	9633.7	5.241	Si
SLV 8	-1.67	-7973	2208.99	12642	5009.43	2.268	Si
SLV 8	0.58	-5165	53.36	8190	3377.25	63.293	Si
SLV 11	-1.67	-9988	2389.97	15837	6092.48	2.549	Si
SLV 11	0.58	-5760	341.72	9132	3734.62	10.929	Si
SLV 5	-1.67	-32034	-1474.05	50790	13117.56	8.899	Si
SLV 5	0.58	-25837	-2338.8	40964	12035.88	5.146	Si
SLV 12	-1.67	-9988	2389.97	15837	6092.48	2.549	Si
SLV 12	0.58	-5760	341.72	9132	3734.62	10.929	Si
SLV 9	-1.67	-34049	-1293.06	53985	13318.8	10.3	Si
SLV 9	0.58	-26431	-2050.43	41906	12169.86	5.935	Si
SLV 10	-1.67	-34049	-1293.06	53985	13318.8	10.3	Si
SLV 10	0.58	-26431	-2050.43	41906	12169.86	5.935	Si

Verifica a taglio nel piano secondo D.M. 17-01-18 (N.T.C.) §7.8.2.2.2 con rottura per scorrimento in combinazioni non sismiche, γM = 3

Comb.	Quota	N	V par	M	σ0	σN	l'	fvd	Vt scorr.	Vt fess.diag.	Vt,lim	c.s.	Verifica
SLU 80	-1.67	-29636	-5601	832.33		46988	1.4016	10833	6833			1.22	Si
SLU 80	0.58	-22368	-2974	-1314.47		35464	1.4016	10284	6486			2.18	Si
SLU 81	-1.67	-30702	-5984	756.14		48678	1.4016	10833	6833			1.14	Si
SLU 81	0.58	-23149	-3295	-1370.47		36703	1.4016	10449	6590			2	Si
SLU 82	-1.67	-30348	-5761	858.97		48117	1.4016	10833	6833			1.19	Si
SLU 82	0.58	-22865	-3110	-1330.27		36253	1.4016	10389	6553			2.11	Si
SLU 77	-1.67	-30105	-5855	736.9		47732	1.4016	10833	6833			1.17	Si
SLU 77	0.58	-22743	-3179	-1353.88		36059	1.4016	10363	6536			2.06	Si
SLU 79	-1.67	-29990	-5824	729.5		47549	1.4016	10833	6833			1.17	Si
SLU 79	0.58	-22652	-3159	-1354.67		35914	1.4016	10344	6524			2.07	Si
SLU 74	-1.67	-29891	-5808	724.59		47393	1.4016	10833	6833			1.18	Si
SLU 74	0.58	-22552	-3155	-1349.82		35757	1.4016	10323	6511			2.06	Si
SLU 83	-1.67	-30915	-6030	768.46		49016	1.4016	10833	6833			1.13	Si
SLU 83	0.58	-23339	-3319	-1374.53		37004	1.4016	10489	6616			1.99	Si
SLU 75	-1.67	-29537	-5585	827.41		46832	1.4016	10833	6833			1.22	Si
SLU 75	0.58	-22269	-2970	-1309.62		35307	1.4016	10263	6473			2.18	Si
SLU 78	-1.67	-29751	-5632	839.72		47170	1.4016	10833	6833			1.21	Si
SLU 78	0.58	-22459	-2994	-1313.68		35609	1.4016	10303	6498			2.17	Si
SLU 84	-1.67	-30561	-5807	871.28		48455	1.4016	10833	6833			1.18	Si
SLU 84	0.58	-23055	-3134	-1334.33		36554	1.4016	10429	6578			2.1	Si

Verifica a taglio nel piano secondo D.M. 17-01-18 (N.T.C.) §7.8.2.2.2 con rottura per scorrimento in combinazioni sismiche, γM = 2

Comb.	Quota	N	V par	M	σ0	σN	l'	fvd	Vt scorr.	Vt fess.diag.	Vt,lim	c.s.	Verifica
SLV 6	-1.67	-32034	-10647	-1474.05		50790	1.4016	16250	10249			0.96	No, Vu<V
SLV 6	0.58	-25837	-6923	-2338.8		40964	1.4016	16250	10249			1.48	Si
SLV 7	-1.67	-7973	3436	2208.99		13938	1.2712	11121	6362			1.85	Si
SLV 7	0.58	-5165	3626	53.36		8190	1.4016	9971	6289			1.73	Si
SLV 10	-1.67	-34049	-11482	-1293.06		53985	1.4016	16250	10249			0.89	No, Vu<V
SLV 10	0.58	-26431	-7868	-2050.43		41906	1.4016	16250	10249			1.3	Si
SLV 1	-1.67	-21262	-4744	-396.13		33710	1.4016	15075	9508			2	Si
SLV 1	0.58	-17909	-2129	-1837.97		28394	1.4016	14012	8838			4.15	Si
SLV 9	-1.67	-34049	-11482	-1293.06		53985	1.4016	16250	10249			0.89	No, Vu<V
SLV 9	0.58	-26431	-7868	-2050.43		41906	1.4016	16250	10249			1.3	Si
SLV 8	-1.67	-7973	3436	2208.99		13938	1.2712	11121	6362			1.85	Si
SLV 8	0.58	-5165	3626	53.36		8190	1.4016	9971	6289			1.73	Si
SLV 14	-1.67	-27979	-7527	207.15		44361	1.4016	16250	10249			1.36	Si
SLV 14	0.58	-19889	-5277	-876.75		31534	1.4016	14640	9234			1.75	Si
SLV 2	-1.67	-21262	-4744	-396.13		33710	1.4016	15075	9508			2	Si
SLV 2	0.58	-17909	-2129	-1837.97		28394	1.4016	14012	8838			4.15	Si
SLV 13	-1.67	-27979	-7527	207.15		44361	1.4016	16250	10249			1.36	Si
SLV 13	0.58	-19889	-5277	-876.75		31534	1.4016	14640	9234			1.75	Si
SLV 5	-1.67	-32034	-10647	-1474.05		50790	1.4016	16250	10249			0.96	No, Vu<V
SLV 5	0.58	-25837	-6923	-2338.8		40964	1.4016	16250	10249			1.48	Si

Verifica a pressoflessione fuori piano D.M. 17-01-18 (N.T.C.)

quota -0.545 Wa 0.08 denominatore 8 γM = 2

Comb.	fd	Sa	σ0	N	M	Mc	Coeff.s.	Verifica
SLV 7	143750	0.24	12518	-7895	58.51	1594.41	27.25	Si
SLV 8	143750	0.24	12518	-7895	58.51	1594.41	27.25	Si
SLV 11	143750	0.24	14539	-9170	58.51	1817.75	31.07	Si
SLV 12	143750	0.24	14539	-9170	58.51	1817.75	31.07	Si
SLV 3	143750	0.24	22192	-13997	58.51	2577.33	44.05	Si
SLV 4	143750	0.24	22192	-13997	58.51	2577.33	44.05	Si
SLV 15	143750	0.24	28930	-18247	58.51	3133.45	53.56	Si
SLV 16	143750	0.24	28930	-18247	58.51	3133.45	53.56	Si
SLV 2	143750	0.24	32506	-20502	58.51	3385.76	57.87	Si
SLV 1	143750	0.24	32506	-20502	58.51	3385.76	57.87	Si

Verifica dei meccanismi locali di collasso con analisi cinematica lineare

forza di aggancio al piano = 0 quota mezzeria = -0.545 Wa = 0.08 Ta = 0.0188

Comb.	N top	N base	V orto	α0	M*	e*	a0*	aLim	Verifica

Comb.	N top	N base	V orto	α0	M*	e*	a0*	aLim	Verifica
SLV 13	-19889	-27979	146	0.099	2224.8	0.972	1.48185	2.92319	No
SLV 14	-19889	-27979	146	0.099	2224.8	0.972	1.48185	2.92319	No
SLV 10	-26431	-34049	196	0.098	2891.1	0.978	1.44891	2.84379	No
SLV 9	-26431	-34049	196	0.098	2891.1	0.978	1.44891	2.84379	No
SLV 5	-25837	-32034	165	0.099	2830.6	0.978	1.46572	2.84379	No
SLV 6	-25837	-32034	165	0.099	2830.6	0.978	1.46572	2.84379	No
SLV 2	-17909	-21262	43	0.104	2023.1	0.97	1.56499	2.92319	No
SLV 1	-17909	-21262	43	0.104	2023.1	0.97	1.56499	2.92319	No
SLV 15	-13688	-20761	72	0.104	1593.5	0.962	1.56628	2.92319	No
SLV 16	-13688	-20761	72	0.104	1593.5	0.962	1.56628	2.92319	No

Tabella dei coefficienti di sicurezza minimi

Stato limite	Coeff.s.	Comb.	Verifica
PF_SLU	6.494	SLU 83	Si
V_SLU	1.133	SLU 83	Si
PF_SLV	2.268	SLV 7	Si
V_SLV	0.893	SLV 9	No
PFFP_SLV	27.252	SLV 7	Si
R_SLV	0.507	SLV 13	No

Maschio 16

Verifiche condotte secondo D.M. 17-01-18 (N.T.C.)

Dati geometrici

X ini.	Y ini.	X fin.	Y fin.	Quota i.	Quota.s	l	Sp.	h netta	h ini.	h fin.	a	a.s.,sx	a.s.,dx
-13.757	-4.717	-13.757	-3.315	L2	L3	1.402	0.45	0.74	0.74	0.74			

Caratteristiche del materiale

(Circolare 7 21-01-19 C8.5.I) Muratura in mattoni pieni e malta di calce LC2_Corti

fb	fk	fvk0	fmedio	τ0	fv0	μ	ϕ	fv,lim	E	G	FC
600000			345000	9000	20000	0.58	0.77	32500	320000000	128000000	1.2

Verifica a pressoflessione nel piano secondo D.M. 17-01-18 NTC §7.8.2.2.1 in combinazioni non sismiche, γM = 3

Comb.	Quota	N	M	σ0	Mu	c.s.	Verifica
SLU 81	0.58	-24499	-2390.7	38844	8981.78	3.757	Si
SLU 81	1.32	-26958	2096.96	42742	8979.08	4.282	Si
SLU 79	0.58	-24007	-2331.97	38064	8962.52	3.843	Si
SLU 79	1.32	-26464	2055.71	41959	8992.86	4.375	Si
SLU 62	0.58	-23064	-2273.4	36568	8907.14	3.918	Si
SLU 62	1.32	-25324	1887.74	40151	8999.25	4.767	Si
SLU 77	0.58	-24105	-2336.06	38219	8966.86	3.838	Si
SLU 77	1.32	-26582	2079.07	42146	8990.17	4.324	Si
SLU 82	0.58	-24192	-2301.13	38357	8970.55	3.898	Si
SLU 82	1.32	-26700	2092.62	42334	8987.1	4.295	Si
SLU 60	0.58	-22862	-2262.9	36248	8892.09	3.93	Si
SLU 60	1.32	-25081	1853.69	39766	8996.04	4.853	Si
SLU 78	0.58	-23798	-2246.49	37732	8952.33	3.985	Si
SLU 78	1.32	-26325	2074.72	41738	8995.55	4.336	Si
SLU 83	0.58	-24702	-2401.19	39165	8987.79	3.743	Si
SLU 83	1.32	-27201	2131.01	43127	8969.87	4.209	Si
SLU 84	0.58	-24395	-2311.62	38678	8978.24	3.884	Si
SLU 84	1.32	-26943	2126.67	42719	8979.59	4.222	Si
SLU 74	0.58	-23903	-2325.57	37898	8957.57	3.852	Si
SLU 74	1.32	-26339	2045.02	41761	8995.29	4.399	Si

Verifica a pressoflessione nel piano secondo D.M. 17-01-18 NTC §7.8.2.2.1 in combinazioni sismiche, γM = 2

Comb.	Quota	N	M	σ0	Mu	c.s.	Verifica
SLV 7	0.58	-5392	1037.78	8549	3514.43	3.387	Si
SLV 7	1.32	-6652	1386.21	10547	4259.45	3.073	Si
SLV 10	0.58	-28177	-4357.1	44674	12526.38	2.875	Si
SLV 10	1.32	-30279	1317.97	48008	12882.18	9.774	Si
SLV 12	0.58	-6351	881.44	10070	4084.04	4.633	Si
SLV 12	1.32	-7427	2006.26	11776	4703.26	2.344	Si
SLV 5	0.58	-27218	-4200.76	43154	12337.41	2.937	Si
SLV 5	1.32	-29504	697.92	46780	12760.41	18.283	Si
SLV 15	0.58	-15109	-1134.45	23955	8512.3	7.503	Si
SLV 15	1.32	-16329	2488.75	25890	9018.7	3.624	Si
SLV 11	0.58	-6351	881.44	10070	4084.04	4.633	Si
SLV 11	1.32	-7427	2006.26	11776	4703.26	2.344	Si
SLV 8	0.58	-5392	1037.78	8549	3514.43	3.387	Si
SLV 8	1.32	-6652	1386.21	10547	4259.45	3.073	Si
SLV 9	0.58	-28177	-4357.1	44674	12526.38	2.875	Si
SLV 9	1.32	-30279	1317.97	48008	12882.18	9.774	Si
SLV 6	0.58	-27218	-4200.76	43154	12337.41	2.937	Si
SLV 6	1.32	-29504	697.92	46780	12760.41	18.283	Si
SLV 16	0.58	-15109	-1134.45	23955	8512.3	7.503	Si
SLV 16	1.32	-16329	2488.75	25890	9018.7	3.624	Si

Verifica a taglio nel piano secondo D.M. 17-01-18 (N.T.C.) §7.8.2.2.2 con rottura per scorrimento in combinazioni non sismiche, γM = 3

Comb.	Quota	N	V par	M	σ0	σN	l'	fvd	Vt scorr.	Vt fess.diag.	Vt,lim	c.s.	Verifica
SLU 79	0.58	-24007	-3196	-2331.97		38064	1.4016	10631	6705			2.1	Si
SLU 79	1.32	-26464	-4182	2055.71		41959	1.4016	10833	6833			1.63	Si
SLU 84	0.58	-24395	-3173	-2311.62		38678	1.4016	10713	6757			2.13	Si
SLU 84	1.32	-26943	-4156	2126.67		42719	1.4016	10833	6833			1.64	Si
SLU 80	0.58	-23701	-3010	-2242.4		37577	1.4016	10566	6664			2.21	Si

Comb.	Quota	N	V par	M	σ0	σN	I'	fvd	Vt scorr.	Vt fess.diag.	Vt,lim	c.s.	Verifica
SLU 80	1.32	-26206	-3956	2051.36		41550	1.4016	10833	6833			1.73	Si
SLU 78	0.58	-23798	-3031	-2246.49		37732	1.4016	10587	6677			2.2	Si
SLU 78	1.32	-26325	-3985	2074.72		41738	1.4016	10833	6833			1.71	Si
SLU 83	0.58	-24702	-3359	-2401.19		39165	1.4016	10778	6797			2.02	Si
SLU 83	1.32	-27201	-4381	2131.01		43127	1.4016	10833	6833			1.56	Si
SLU 82	0.58	-24192	-3148	-2301.13		38357	1.4016	10670	6730			2.14	Si
SLU 82	1.32	-26700	-4121	2092.62		42334	1.4016	10833	6833			1.66	Si
SLU 81	0.58	-24499	-3335	-2390.7		38844	1.4016	10735	6771			2.03	Si
SLU 81	1.32	-26958	-4347	2096.96		42742	1.4016	10833	6833			1.57	Si
SLU 74	0.58	-23903	-3193	-2325.57		37898	1.4016	10609	6691			2.1	Si
SLU 74	1.32	-26339	-4176	2045.02		41761	1.4016	10833	6833			1.64	Si
SLU 77	0.58	-24105	-3218	-2336.06		38219	1.4016	10651	6718			2.09	Si
SLU 77	1.32	-26582	-4210	2079.07		42146	1.4016	10833	6833			1.62	Si
SLU 62	0.58	-23064	-3056	-2273.4		36568	1.4016	10431	6579			2.15	Si
SLU 62	1.32	-25324	-3983	1887.74		40151	1.4016	10833	6833			1.72	Si

Verifica a taglio nel piano secondo D.M. 17-01-18 (N.T.C.) §7.8.2.2.2 con rottura per scorrimento in combinazioni sismiche, γM = 2

Comb.	Quota	N	V par	M	σ0	σN	I'	fvd	Vt scorr.	Vt fess.diag.	Vt,lim	c.s.	Verifica
SLV 14	0.58	-21657	-5699	-2706.01		34337	1.4016	15201	9587			1.68	Si
SLV 14	1.32	-23185	-10578	2282.27		36760	1.4016	15685	9893			0.94	No, Vu<V
SLV 5	0.58	-27218	-7032	-4200.76		43154	1.4016	16250	10249			1.46	Si
SLV 5	1.32	-29504	-9239	697.92		46780	1.4016	16250	10249			1.11	Si
SLV 7	0.58	-5392	3898	1037.78		8549	1.4016	10043	6334			1.62	Si
SLV 7	1.32	-6652	6827	1386.21		10547	1.4016	10443	6586			0.96	No, Vu<V
SLV 15	0.58	-15109	-2420	-1134.45		23955	1.4016	13124	8278			3.42	Si
SLV 15	1.32	-16329	-5758	2488.75		25890	1.4016	13511	8522			1.48	Si
SLV 10	0.58	-28177	-8183	-4357.1		44674	1.4016	16250	10249			1.25	Si
SLV 10	1.32	-30279	-12452	1317.97		48008	1.4016	16250	10249			0.82	No, Vu<V
SLV 16	0.58	-15109	-2420	-1134.45		23955	1.4016	13124	8278			3.42	Si
SLV 16	1.32	-16329	-5758	2488.75		25890	1.4016	13511	8522			1.48	Si
SLV 8	0.58	-5392	3898	1037.78		8549	1.4016	10043	6334			1.62	Si
SLV 8	1.32	-6652	6827	1386.21		10547	1.4016	10443	6586			0.96	No, Vu<V
SLV 9	0.58	-28177	-8183	-4357.1		44674	1.4016	16250	10249			1.25	Si
SLV 9	1.32	-30279	-12452	1317.97		48008	1.4016	16250	10249			0.82	No, Vu<V
SLV 13	0.58	-21657	-5699	-2706.01		34337	1.4016	15201	9587			1.68	Si
SLV 13	1.32	-23185	-10578	2282.27		36760	1.4016	15685	9893			0.94	No, Vu<V
SLV 6	0.58	-27218	-7032	-4200.76		43154	1.4016	16250	10249			1.46	Si
SLV 6	1.32	-29504	-9239	697.92		46780	1.4016	16250	10249			1.11	Si

Verifica a pressoflessione fuori piano D.M. 17-01-18 (N.T.C.)

quota 0.95 Wa 0.08 denominatore 8 γM = 2

Comb.	fd	Sa	σ0	N	M	Mc	Coeff.s.	Verifica
SLV 8	143750	0.26	15377	-9698	6.84	1907.48	278.83	Si
SLV 7	143750	0.26	15377	-9698	6.84	1907.48	278.83	Si
SLV 12	143750	0.26	16719	-10545	6.84	2047.99	299.37	Si
SLV 11	143750	0.26	16719	-10545	6.84	2047.99	299.37	Si
SLV 4	143750	0.26	27477	-17330	6.84	3022.39	441.8	Si
SLV 3	143750	0.26	27477	-17330	6.84	3022.39	441.8	Si
SLV 16	143750	0.26	31953	-20153	6.84	3348.65	489.5	Si
SLV 15	143750	0.26	31953	-20153	6.84	3348.65	489.5	Si
SLV 1	143750	0.26	39191	-24718	6.84	3777.75	552.22	Si
SLV 2	143750	0.26	39191	-24718	6.84	3777.75	552.22	Si

Verifica dei meccanismi locali di collasso con analisi cinematica lineare

forza di aggancio al piano = 0 quota mezzeria = 0.95 Wa = 0.08 Ta = 0.002

Comb.	N top	N base	V orto	α0	M*	e*	a0*	aLim	Verifica
SLV 8	-6652	-5392	-687	0.225	743	0.973	3.3617	2.58024	Si
SLV 7	-6652	-5392	-687	0.225	743	0.973	3.3617	2.58024	Si
SLV 12	-7427	-6351	-680	0.234	821.9	0.975	3.4816	2.58024	Si
SLV 11	-7427	-6351	-680	0.234	821.9	0.975	3.4816	2.58024	Si
SLV 6	-29504	-27218	1767	0.249	3072	0.993	3.64808	2.58024	Si
SLV 5	-29504	-27218	1767	0.249	3072	0.993	3.64808	2.58024	Si
SLV 10	-30279	-28177	1773	0.25	3150.9	0.993	3.66464	2.58024	Si
SLV 9	-30279	-28177	1773	0.25	3150.9	0.993	3.66464	2.58024	Si
SLV 2	-20602	-18460	900	0.267	2164.6	0.99	3.92274	2.58742	Si
SLV 1	-20602	-18460	900	0.267	2164.6	0.99	3.92274	2.58742	Si

Tabella dei coefficienti di sicurezza minimi

Stato limite	Coeff.s.	Comb.	Verifica
PF_SLU	3.743	SLU 83	Si
V_SLU	1.56	SLU 83	Si
PF_SLV	2.344	SLV 11	Si
V_SLV	0.823	SLV 9	No
PFFP_SLV	278.83	SLV 7	Si
R_SLV	1.303	SLV 7	Si

Maschio 18

Verifiche condotte secondo D.M. 17-01-18 (N.T.C.)

Dati geometrici

X ini.	Y ini.	X fin.	Y fin.	Quota i.	Quota.s	l	Sp.	h netta	h ini.	h fin.	a	a.s.,sx	a.s.,dx
-13.757	-3.315	-13.757	1.032	Z medio -54 cm	L3	4.347	0.45	1.865	0.74	2.99			

Caratteristiche del materiale

(Circolare 7 21-01-19 C8.5.I) Muratura in mattoni pieni e malta di calce LC2_Corti

fb	fk	fvk0	fmedio	τ0	fv0	μ	ϕ	fv,lim	E	G	FC
600000			345000	9000	20000	0.58	0.77	32500	320000000	128000000	1.2

Verifica a pressoflessione nel piano secondo D.M. 17-01-18 NTC §7.8.2.2.1 in combinazioni non sismiche, γM = 3

Comb.	Quota	N	M	σ0	Mu	c.s.	Verifica
SLU 50	0.58	-74838	-10929.75	38254	86281.16	7.894	Si
SLU 50	1.32	-63765	-4964.61	32594	83145.99	16.748	Si
SLU 45	0.58	-74294	-10945.44	37976	86205.28	7.876	Si
SLU 45	1.32	-63266	-5025.11	32339	82925.95	16.502	Si
SLU 66	0.58	-82318	-10819.97	42078	86506.04	7.995	Si
SLU 66	1.32	-70514	-4658.34	36044	85454.94	18.345	Si
SLU 48	0.58	-75469	-10908.03	38576	86359.01	7.917	Si
SLU 48	1.32	-64340	-4906.33	32888	83391.32	16.997	Si
SLU 79	0.58	-91980	-10308.57	47016	84537.36	8.201	Si
SLU 79	1.32	-79416	-4332.13	40594	86600.01	19.99	Si
SLU 71	0.58	-82862	-10804.27	42356	86462.86	8.003	Si
SLU 71	1.32	-71013	-4597.84	36299	85576.32	18.612	Si
SLU 64	0.58	-80513	-10879.11	41155	86591.49	7.959	Si
SLU 64	1.32	-68864	-4835.39	35200	85005.24	17.58	Si
SLU 69	0.58	-83492	-10782.55	42678	86402.73	8.013	Si
SLU 69	1.32	-71589	-4539.56	36593	85707.86	18.88	Si
SLU 43	0.58	-72490	-11004.58	37054	85895.7	7.805	Si
SLU 43	1.32	-61616	-5202.17	31496	82150.01	15.792	Si
SLU 77	0.58	-92610	-10286.85	47339	84320.42	8.197	Si
SLU 77	1.32	-79991	-4273.85	40888	86599.64	20.263	Si

Verifica a pressoflessione nel piano secondo D.M. 17-01-18 NTC §7.8.2.2.1 in combinazioni sismiche, γM = 2

Comb.	Quota	N	M	σ0	Mu	c.s.	Verifica
SLV 7	0.58	-63250	7230.7	32331	101108.23	13.983	Si
SLV 7	1.32	-55942	4763.95	28595	93143.38	19.552	Si
SLV 8	0.58	-63250	7230.7	32331	101108.23	13.983	Si
SLV 8	1.32	-55942	4763.95	28595	93143.38	19.552	Si
SLV 5	0.58	-56650	-23842.71	28957	93958.37	3.941	Si
SLV 5	1.32	-48642	-11590.76	24864	84218.46	7.266	Si
SLV 13	0.58	-71202	-12743.79	36395	108670.89	8.527	Si
SLV 13	1.32	-57646	-7213.52	29466	95087.75	13.182	Si
SLV 9	0.58	-62300	-23739.68	31845	100128.19	4.218	Si
SLV 9	1.32	-51619	-12212.41	26385	87974.75	7.204	Si
SLV 1	0.58	-52369	-13087.21	26769	88895.95	6.793	Si
SLV 1	1.32	-47724	-5141.35	24395	83027.78	16.149	Si
SLV 10	0.58	-62300	-23739.68	31845	100128.19	4.218	Si
SLV 10	1.32	-51619	-12212.41	26385	87974.75	7.204	Si
SLV 14	0.58	-71202	-12743.79	36395	108670.89	8.527	Si
SLV 14	1.32	-57646	-7213.52	29466	95087.75	13.182	Si
SLV 6	0.58	-56650	-23842.71	28957	93958.37	3.941	Si
SLV 6	1.32	-48642	-11590.76	24864	84218.46	7.266	Si
SLV 2	0.58	-52369	-13087.21	26769	88895.95	6.793	Si
SLV 2	1.32	-47724	-5141.35	24395	83027.78	16.149	Si

Verifica a taglio nel piano secondo D.M. 17-01-18 (N.T.C.) §7.8.2.2.2 con rottura per scorrimento in combinazioni non sismiche, γM = 3

Comb.	Quota	N	V par	M	σ0	σN	l'	fvd	Vt scorr.	Vt fess.diag.	Vt,lim	c.s.	Verifica
SLU 55	0.58	-83503	4303	-9640.55		42683	4.3474	10833	21194			4.93	Si
SLU 55	1.32	-71783	6599	-4535.73		36693	4.3474	10448	20440			3.1	Si
SLU 82	0.58	-93972	4187	-9672.42		48034	4.3474	10833	21194			5.06	Si
SLU 82	1.32	-81282	6889	-4286.64		41548	4.3474	10833	21194			3.08	Si
SLU 75	0.58	-91869	4074	-9825.72		46959	4.3474	10833	21194			5.2	Si
SLU 75	1.32	-79331	6726	-4223.46		40551	4.3474	10833	21194			3.15	Si
SLU 78	0.58	-93043	4122	-9788.31		47560	4.3474	10833	21194			5.14	Si
SLU 78	1.32	-80405	6813	-4104.69		41100	4.3474	10833	21194			3.11	Si
SLU 73	0.58	-90352	4540	-9552.5		46184	4.3474	10833	21194			4.67	Si
SLU 73	1.32	-77957	7061	-4287.74		39848	4.3474	10833	21194			3	Si
SLU 52	0.58	-82328	4255	-9677.97		42083	4.3474	10833	21194			4.98	Si
SLU 52	1.32	-70709	6512	-4654.51		36143	4.3474	10375	20296			3.12	Si
SLU 84	0.58	-95146	4235	-9635		48635	4.3474	10833	21194			5	Si
SLU 84	1.32	-82357	6976	-4167.87		42097	4.3474	10833	21194			3.04	Si
SLU 80	0.58	-92413	4107	-9810.03		47237	4.3474	10833	21194			5.16	Si
SLU 80	1.32	-79830	6774	-4162.96		40806	4.3474	10833	21194			3.13	Si
SLU 76	0.58	-91527	4588	-9515.08		46785	4.3474	10833	21194			4.62	Si
SLU 76	1.32	-79032	7148	-4168.96		40398	4.3474	10833	21194			2.96	Si
SLU 68	0.58	-82409	4177	-10010.78		42124	4.3474	10833	21194			5.07	Si
SLU 68	1.32	-70629	6472	-4434.67		36103	4.3474	10369	20286			3.13	Si

Verifica a taglio nel piano secondo D.M. 17-01-18 (N.T.C.) §7.8.2.2.2 con rottura per scorrimento in combinazioni sismiche, γM = 2

Comb.	Quota	N	V par	M	σ0	σN	l'	fvd	Vt scorr.	Vt fess.diag.	Vt,lim	c.s.	Verifica
SLV 16	0.58	-73181	9893	-3421.77		37407	4.3474	15815	30939			3.13	Si
SLV 16	1.32	-59836	10486	-2307.11		30586	4.3474	14450	28270			2.7	Si
SLV 12	0.58	-68900	21989	7333.73		35219	4.3474	15377	30083			1.37	Si
SLV 12	1.32	-58918	17762	4142.3		30116	4.3474	14357	28086			1.58	Si
SLV 7	0.58	-63250	20837	7230.7		32331	4.3474	14799	28953			1.39	Si
SLV 7	1.32	-55942	16252	4763.95		28595	4.3474	14052	27491			1.69	Si
SLV 15	0.58	-73181	9893	-3421.77		37407	4.3474	15815	30939			3.13	Si
SLV 15	1.32	-59836	10486	-2307.11		30586	4.3474	14450	28270			2.7	Si
SLV 8	0.58	-63250	20837	7230.7		32331	4.3474	14799	28953			1.39	Si
SLV 8	1.32	-55942	16252	4763.95		28595	4.3474	14052	27491			1.69	Si
SLV 5	0.58	-56650	-17561	-23842.71		28957	4.3474	14125	27633			1.57	Si
SLV 5	1.32	-48642	-9570	-11590.76		24864	4.3474	13306	26031			2.72	Si
SLV 6	0.58	-56650	-17561	-23842.71		28957	4.3474	14125	27633			1.57	Si

Comb.	Quota	N	V par	M	σ0	σN	l'	fvd	Vt scorr.	Vt fess.diag.	Vt,lim	c.s.	Verifica
SLV 6	1.32	-48642	-9570	-11590.76		24864	4.3474	13306	26031			2.72	Si
SLV 9	0.58	-62300	-16409	-23739.68		31845	4.3474	14702	28763			1.75	Si
SLV 9	1.32	-51619	-8060	-12212.41		26385	4.3474	13610	26627			3.3	Si
SLV 10	0.58	-62300	-16409	-23739.68		31845	4.3474	14702	28763			1.75	Si
SLV 10	1.32	-51619	-8060	-12212.41		26385	4.3474	13610	26627			3.3	Si
SLV 11	0.58	-68900	21989	7333.73		35219	4.3474	15377	30083			1.37	Si
SLV 11	1.32	-58918	17762	4142.3		30116	4.3474	14357	28086			1.58	Si

Verifica a pressoflessione fuori piano D.M. 17-01-18 (N.T.C.)

quota 0.95 Wa 0.08 denominatore 8 γM = 2

Comb.	fd	Sa	σ0	N	M	Mc	Coeff.s.	Verifica
SLV 2	143750	0.26	25434	-49757	134.78	8865	65.77	Si
SLV 1	143750	0.26	25434	-49757	134.78	8865	65.77	Si
SLV 3	143750	0.26	26188	-51232	134.78	9056.69	67.2	Si
SLV 4	143750	0.26	26188	-51232	134.78	9056.69	67.2	Si
SLV 6	143750	0.26	26287	-51427	134.78	9081.64	67.38	Si
SLV 5	143750	0.26	26287	-51427	134.78	9081.64	67.38	Si
SLV 10	143750	0.26	27773	-54333	134.78	9446.24	70.09	Si
SLV 9	143750	0.26	27773	-54333	134.78	9446.24	70.09	Si
SLV 8	143750	0.26	28801	-56344	134.78	9689.21	71.89	Si
SLV 7	143750	0.26	28801	-56344	134.78	9689.21	71.89	Si

Verifica dei meccanismi locali di collasso con analisi cinematica lineare

forza di aggancio al piano = 0 quota mezzeria = 0.95 Wa = 0.08 Ta = 0.0129

Comb.	N top	N base	V orto	α0	M*	e*	a0*	aLim	Verifica
SLV 13	-57646	-71202	1104	0.109	6383	0.975	1.62497	2.95263	No
SLV 14	-57646	-71202	1104	0.109	6383	0.975	1.62497	2.95263	No
SLV 9	-51619	-62300	1091	0.108	5769.1	0.973	1.6136	2.89858	No
SLV 10	-51619	-62300	1091	0.108	5769.1	0.973	1.6136	2.89858	No
SLV 16	-59836	-73181	942	0.112	6606	0.976	1.66776	2.95263	No
SLV 15	-59836	-73181	942	0.112	6606	0.976	1.66776	2.95263	No
SLV 5	-48642	-56650	918	0.111	5466	0.971	1.65486	2.89858	No
SLV 6	-48642	-56650	918	0.111	5466	0.971	1.65486	2.89858	No
SLV 1	-47724	-52369	528	0.118	5372.5	0.971	1.76738	2.95263	No
SLV 2	-47724	-52369	528	0.118	5372.5	0.971	1.76738	2.95263	No

Tabella dei coefficienti di sicurezza minimi

Stato limite	Coeff.s.	Comb.	Verifica
PF_SLU	7.805	SLU 43	Si
V_SLU	2.965	SLU 76	Si
PF_SLV	3.941	SLV 5	Si
V_SLV	1.368	SLV 11	Si
PFFP_SLV	65.773	SLV 1	Si
R_SLV	0.55	SLV 13	No

Maschio 19

Verifiche condotte secondo D.M. 17-01-18 (N.T.C.)

Dati geometrici

X ini.	Y ini.	X fin.	Y fin.	Quota i.	Quota.s	l	Sp.	h netta	h ini.	h fin.	a	a.s.,sx	a.s.,dx
-19.635	1.032	-24.647	1.032	L1	L3	5.013	0.45	2.99	2.99	2.99			

Caratteristiche del materiale

(Circolare 7 21-01-19 C8.5.I) Muratura in mattoni pieni e malta di calce LC2_Corti

fb	fk	fvk0	fmedio	τ0	fv0	μ	ϕ	fv,lim	E	G	FC
600000			345000	9000	20000	0.58	0.77	32500	320000000	128000000	1.2

Verifica a pressoflessione nel piano secondo D.M. 17-01-18 NTC §7.8.2.2.1 in combinazioni non sismiche, γM = 3

Comb.	Quota	N	M	σ0	Mu	c.s.	Verifica
SLU 69	-1.67	-71341	32378.35	31628	109376.63	3.378	Si
SLU 69	0.43	-64388	-2572.32	28545	104823.12	40.75	Si
SLU 80	-1.67	-79022	34230.3	35033	112873.4	3.297	Si
SLU 80	0.43	-72929	-4249.39	32332	110231.4	25.941	Si
SLU 74	-1.67	-78985	33700.16	35017	112860.5	3.349	Si
SLU 74	0.43	-72771	-4381.73	32262	110149.64	25.138	Si
SLU 75	-1.67	-78720	33545.23	34899	112766.23	3.362	Si
SLU 75	0.43	-72498	-4180.85	32141	110006.39	26.312	Si
SLU 77	-1.67	-79643	34711.8	35308	113085.83	3.258	Si
SLU 77	0.43	-73583	-4457.2	32622	110563.78	24.806	Si
SLU 83	-1.67	-82187	34373.63	36436	113846.25	3.312	Si
SLU 83	0.43	-76331	-5182.6	33840	111831.32	21.578	Si
SLU 70	-1.67	-71076	32223.43	31510	109227	3.39	Si
SLU 70	0.43	-64115	-2371.45	28424	104617.44	44.115	Si
SLU 78	-1.67	-79377	34556.88	35191	112996.32	3.27	Si
SLU 78	0.43	-73310	-4256.32	32501	110426.58	25.944	Si
SLU 84	-1.67	-81922	34218.71	36319	113775.17	3.325	Si
SLU 84	0.43	-76058	-4981.72	33719	111714.58	22.425	Si
SLU 79	-1.67	-79287	34385.22	35151	112965.48	3.285	Si
SLU 79	0.43	-73202	-4450.27	32453	110371.44	24.801	Si

Verifica a pressoflessione nel piano secondo D.M. 17-01-18 NTC §7.8.2.2.1 in combinazioni sismiche, γM = 2

Comb.	Quota	N	M	σ0	Mu	c.s.	Verifica
SLV 15	-1.67	-48528	-23138.93	21514	100208.76	4.331	Si
SLV 15	0.43	-34418	-4841.1	15259	75488.88	15.593	Si

Comb.	Quota	N	M	σ0	Mu	c.s.	Verifica
SLV 16	-1.67	-48528	-23138.93	21514	100208.76	4.331	Si
SLV 16	0.43	-34418	-4841.1	15259	75488.88	15.593	Si
SLV 2	-1.67	-60256	69447.13	26713	118000.09	1.699	Si
SLV 2	0.43	-63325	674.94	28074	122242.84	181.117	Si
SLV 7	-1.67	-50802	36236.09	22522	103853.36	2.866	Si
SLV 7	0.43	-42329	5448.52	18766	89794.32	16.48	Si
SLV 6	-1.67	-60617	37714.84	26874	118508.49	3.142	Si
SLV 6	0.43	-62289	-6852.76	27615	120830.72	17.632	Si
SLV 1	-1.67	-60256	69447.13	26713	118000.09	1.699	Si
SLV 1	0.43	-63325	674.94	28074	122242.84	181.117	Si
SLV 4	-1.67	-57311	69003.5	25408	113768.17	1.649	Si
SLV 4	0.43	-57336	4365.32	25419	113805.48	26.07	Si
SLV 3	-1.67	-57311	69003.5	25408	113768.17	1.649	Si
SLV 3	0.43	-57336	4365.32	25419	113805.48	26.07	Si
SLV 5	-1.67	-60617	37714.84	26874	118508.49	3.142	Si
SLV 5	0.43	-62289	-6852.76	27615	120830.72	17.632	Si
SLV 8	-1.67	-50802	36236.09	22522	103853.36	2.866	Si
SLV 8	0.43	-42329	5448.52	18766	89794.32	16.48	Si

Verifica a taglio nel piano secondo D.M. 17-01-18 (N.T.C.) §7.8.2.2.2 con rottura per scorrimento in combinazioni non sismiche, γM = 3

Comb.	Quota	N	V par	M	σ0	σN	l'	fvd	Vt scorr.	Vt fess.diag.	Vt,lim	c.s.	Verifica
SLU 78	-1.67	-79377	23988	34556.88		35191	5.0125	10248	23115			0.96	No, Vu<V
SLU 78	0.43	-73310	23627	-4256.32		32501	5.0125	9889	22306			0.94	No, Vu<V
SLU 75	-1.67	-78720	23287	33545.23		34899	5.0125	10209	23027			0.99	No, Vu<V
SLU 75	0.43	-72498	22931	-4180.85		32141	5.0125	9841	22198			0.97	No, Vu<V
SLU 83	-1.67	-82187	24590	34373.63		36436	5.0125	10414	23490			0.96	No, Vu<V
SLU 83	0.43	-76331	24225	-5182.6		33840	5.0125	10068	22709			0.94	No, Vu<V
SLU 74	-1.67	-78985	23464	33700.16		35017	5.0125	10224	23063			0.98	No, Vu<V
SLU 74	0.43	-72771	23108	-4381.73		32262	5.0125	9857	22234			0.96	No, Vu<V
SLU 79	-1.67	-79287	23975	34385.22		35151	5.0125	10242	23103			0.96	No, Vu<V
SLU 79	0.43	-73202	23618	-4450.27		32453	5.0125	9883	22292			0.94	No, Vu<V
SLU 81	-1.67	-81529	23889	33361.99		36145	5.0125	10375	23402			0.98	No, Vu<V
SLU 81	0.43	-75518	23529	-5107.13		33480	5.0125	10020	22600			0.96	No, Vu<V
SLU 80	-1.67	-79022	23798	34230.3		35033	5.0125	10227	23068			0.97	No, Vu<V
SLU 80	0.43	-72929	23440	-4249.39		32332	5.0125	9866	22255			0.95	No, Vu<V
SLU 82	-1.67	-81264	23712	33207.06		36027	5.0125	10359	23366			0.99	No, Vu<V
SLU 82	0.43	-75245	23352	-4906.25		33359	5.0125	10003	22564			0.97	No, Vu<V
SLU 77	-1.67	-79643	24165	34711.8		35308	5.0125	10263	23150			0.96	No, Vu<V
SLU 77	0.43	-73583	23804	-4457.2		32622	5.0125	9905	22342			0.94	No, Vu<V
SLU 84	-1.67	-81922	24413	34218.71		36319	5.0125	10398	23454			0.96	No, Vu<V
SLU 84	0.43	-76058	24048	-4981.72		33719	5.0125	10051	22672			0.94	No, Vu<V

Verifica a taglio nel piano secondo D.M. 17-01-18 (N.T.C.) §7.8.2.2.2 con rottura per scorrimento in combinazioni sismiche, γM = 2

Comb.	Quota	N	V par	M	σ0	σN	l'	fvd	Vt scorr.	Vt fess.diag.	Vt,lim	c.s.	Verifica
SLV 7	-1.67	-50802	18350	36236.09		22522	5.0125	12838	28957			1.58	Si
SLV 7	0.43	-42329	18414	5448.52		18766	5.0125	12087	27263			1.48	Si
SLV 16	-1.67	-48528	-14500	-23138.93		21514	5.0125	12636	28503			1.97	Si
SLV 16	0.43	-34418	-14609	-4841.1		15259	5.0125	11385	25681			1.76	Si
SLV 1	-1.67	-60256	44978	69447.13		32971	4.0612	14928	27280			0.61	No, Vu<V
SLV 1	0.43	-63325	44591	674.94		28074	5.0125	13948	31462			0.71	No, Vu<V
SLV 3	-1.67	-57311	41780	69003.5		32600	3.9067	14853	26112			0.63	No, Vu<V
SLV 3	0.43	-57336	41587	4365.32		25419	5.0125	13417	30264			0.73	No, Vu<V
SLV 15	-1.67	-48528	-14500	-23138.93		21514	5.0125	12636	28503			1.97	Si
SLV 15	0.43	-34418	-14609	-4841.1		15259	5.0125	11385	25681			1.76	Si
SLV 8	-1.67	-50802	18350	36236.09		22522	5.0125	12838	28957			1.58	Si
SLV 8	0.43	-42329	18414	5448.52		18766	5.0125	12087	27263			1.48	Si
SLV 5	-1.67	-60617	29012	37714.84		26874	5.0125	13708	30920			1.07	Si
SLV 5	0.43	-62289	28426	-6852.76		27615	5.0125	13856	31255			1.1	Si
SLV 4	-1.67	-57311	41780	69003.5		32600	3.9067	14853	26112			0.63	No, Vu<V
SLV 4	0.43	-57336	41587	4365.32		25419	5.0125	13417	30264			0.73	No, Vu<V
SLV 2	-1.67	-60256	44978	69447.13		32971	4.0612	14928	27280			0.61	No, Vu<V
SLV 2	0.43	-63325	44591	674.94		28074	5.0125	13948	31462			0.71	No, Vu<V
SLV 6	-1.67	-60617	29012	37714.84		26874	5.0125	13708	30920			1.07	Si
SLV 6	0.43	-62289	28426	-6852.76		27615	5.0125	13856	31255			1.1	Si

Verifica a pressoflessione fuori piano D.M. 17-01-18 (N.T.C.)

quota -0.175 Wa 0.08 denominatore 8 γM = 2

Comb.	fd	Sa	σ0	N	M	Mc	Coeff.s.	Verifica
SLV 15	143750	0.24	17990	-40578	369.51	7785.79	21.07	Si
SLV 16	143750	0.24	17990	-40578	369.51	7785.79	21.07	Si
SLV 12	143750	0.24	18925	-42689	369.51	8117.3	21.97	Si
SLV 11	143750	0.24	18925	-42689	369.51	8117.3	21.97	Si
SLV 13	143750	0.24	19577	-44158	369.51	8343.76	22.58	Si
SLV 14	143750	0.24	19577	-44158	369.51	8343.76	22.58	Si
SLV 8	143750	0.24	21315	-48079	369.51	8930.7	24.17	Si
SLV 7	143750	0.24	21315	-48079	369.51	8930.7	24.17	Si
SLV 9	143750	0.24	24217	-54625	369.51	9854.63	26.67	Si
SLV 10	143750	0.24	24217	-54625	369.51	9854.63	26.67	Si

Verifica dei meccanismi locali di collasso con analisi cinematica lineare

forza di aggancio al piano = 0 quota mezzeria = -0.175 Wa = 0.08 Ta = 0.0332

Comb.	N top	N base	V orto	α0	M*	e*	a0*	aLim	Verifica
SLV 2	-48844	-60256	1619	0.054	5925.2	0.953	0.82456	3.6078	No
SLV 1	-48844	-60256	1619	0.054	5925.2	0.953	0.82456	3.6078	No
SLV 4	-36187	-57311	1294	0.055	4640.9	0.942	0.85511	3.6078	No
SLV 3	-36187	-57311	1294	0.055	4640.9	0.942	0.85511	3.6078	No
SLV 5	-58849	-60617	1753	0.055	6942.1	0.959	0.83761	3.42705	No
SLV 6	-58849	-60617	1753	0.055	6942.1	0.959	0.83761	3.42705	No
SLV 9	-54768	-57982	1542	0.057	6527.2	0.957	0.87199	3.42705	No

Comb.	N top	N base	V orto	α0	M*	e*	a0*	aLim	Verifica
SLV 10	-54768	-57982	1542	0.057	6527.2	0.957	0.87199	3.42705	No
SLV 13	-35241	-51473	916	0.064	4545	0.941	0.99048	3.6078	No
SLV 14	-35241	-51473	916	0.064	4545	0.941	0.99048	3.6078	No

Tabella dei coefficienti di sicurezza minimi

Stato limite	Coeff.s.	Comb.	Verifica
PF_SLU	3.258	SLU 77	Si
V_SLU	0.937	SLU 83	No
PF_SLV	1.649	SLV 3	Si
V_SLV	0.607	SLV 1	No
PFFP_SLV	21.071	SLV 15	Si
R_SLV	0.229	SLV 1	No

Maschio 20

Verifiche condotte secondo D.M. 17-01-18 (N.T.C.)

Dati geometrici

X ini.	Y ini.	X fin.	Y fin.	Quota i.	Quota.s	l	Sp.	h netta	h ini.	h fin.	a	a.s.,sx	a.s.,dx
-15.135	1.032	-18.635	1.032	L1	L3	3.5	0.45	2.99	2.99	2.99			

Caratteristiche del materiale

(Circolare 7 21-01-19 C8.5.I) Muratura in mattoni pieni e malta di calce LC2_Corti

fb	fk	fvk0	fmedio	τ0	fv0	μ	ϕ	fv,lim	E	G	FC
600000			345000	9000	20000	0.58	0.77	32500	320000000	128000000	1.2

Verifica a pressoflessione nel piano secondo D.M. 17-01-18 NTC §7.8.2.2.1 in combinazioni non sismiche, γM = 3

Comb.	Quota	N	M	σ0	Mu	c.s.	Verifica
SLU 77	-1.67	-80160	10019.49	50895	52633.03	5.253	Si
SLU 77	0.43	-73643	7383.68	46758	54900.2	7.435	Si
SLU 83	-1.67	-82740	9771.55	52533	51415.47	5.262	Si
SLU 83	0.43	-76274	7488.52	48428	54124.39	7.228	Si
SLU 80	-1.67	-78881	9345.55	50083	53169.41	5.689	Si
SLU 80	0.43	-72784	6882.28	46212	55112.81	8.008	Si
SLU 74	-1.67	-79267	9478.31	50328	53012.21	5.593	Si
SLU 74	0.43	-72693	7308.38	46154	55134.14	7.544	Si
SLU 79	-1.67	-79705	9929.81	50606	52829.07	5.32	Si
SLU 79	0.43	-73181	7322.02	46464	55016.95	7.514	Si
SLU 81	-1.67	-81847	9230.37	51966	51857.48	5.618	Si
SLU 81	0.43	-75323	7413.23	47824	54426.57	7.342	Si
SLU 84	-1.67	-81916	9187.29	52010	51824.01	5.641	Si
SLU 84	0.43	-75876	7048.78	48175	54253.82	7.697	Si
SLU 78	-1.67	-79336	9435.24	50372	52983.6	5.616	Si
SLU 78	0.43	-73246	6943.93	46505	55001.08	7.921	Si
SLU 82	-1.67	-81023	8646.11	51443	52245.96	6.043	Si
SLU 82	0.43	-74925	6973.48	47572	54545.68	7.822	Si
SLU 75	-1.67	-78443	8894.06	49805	53342.71	5.998	Si
SLU 75	0.43	-72295	6868.63	45901	55224.7	8.04	Si

Verifica a pressoflessione nel piano secondo D.M. 17-01-18 NTC §7.8.2.2.1 in combinazioni sismiche, γM = 2

Comb.	Quota	N	M	σ0	Mu	c.s.	Verifica
SLV 15	-1.67	-56791	-26722.31	36058	70055.68	2.622	Si
SLV 15	0.43	-45384	8959.03	28815	60692.31	6.774	Si
SLV 16	-1.67	-56791	-26722.31	36058	70055.68	2.622	Si
SLV 16	0.43	-45384	8959.03	28815	60692.31	6.774	Si
SLV 3	-1.67	-53475	46625.96	33952	67577.6	1.449	Si
SLV 3	0.43	-48335	36.45	30689	63340.96	1000	Si
SLV 13	-1.67	-53995	-34322.71	34283	67979.73	1.981	Si
SLV 13	0.43	-48561	10154.35	30833	63538.06	6.257	Si
SLV 1	-1.67	-50679	39025.56	32177	65333.05	1.674	Si
SLV 1	0.43	-51512	1231.78	32706	66016.25	53.594	Si
SLV 14	-1.67	-53995	-34322.71	34283	67979.73	1.981	Si
SLV 14	0.43	-48561	10154.35	30833	63538.06	6.257	Si
SLV 7	-1.67	-57897	29821.2	36760	70837.82	2.375	Si
SLV 7	0.43	-43595	1764.81	27680	59009.14	33.436	Si
SLV 8	-1.67	-57897	29821.2	36760	70837.82	2.375	Si
SLV 8	0.43	-43595	1764.81	27680	59009.14	33.436	Si
SLV 4	-1.67	-53475	46625.96	33952	67577.6	1.449	Si
SLV 4	0.43	-48335	36.45	30689	63340.96	1000	Si
SLV 2	-1.67	-50679	39025.56	32177	65333.05	1.674	Si
SLV 2	0.43	-51512	1231.78	32706	66016.25	53.594	Si

Verifica a taglio nel piano secondo D.M. 17-01-18 (N.T.C.) §7.8.2.2.2 con rottura per scorrimento in combinazioni non sismiche, γM = 3

Comb.	Quota	N	V par	M	σ0	σN	l'	fvd	Vt scorr.	Vt fess.diag.	Vt,lim	c.s.	Verifica
SLU 77	-1.67	-80160	2330	10019.49		50895	3.5	10833	17063			7.32	Si
SLU 77	0.43	-73643	2352	7383.68		46758	3.5	10833	17063			7.26	Si
SLU 80	-1.67	-78881	2567	9345.55		50083	3.5	10833	17063			6.65	Si
SLU 80	0.43	-72784	2590	6882.28		46212	3.5	10833	17063			6.59	Si
SLU 75	-1.67	-78443	2320	8894.06		49805	3.5	10833	17063			7.35	Si
SLU 75	0.43	-72295	2342	6868.63		45901	3.5	10833	17063			7.29	Si
SLU 84	-1.67	-81916	2456	9187.29		52010	3.5	10833	17063			6.95	Si
SLU 84	0.43	-75876	2479	7048.78		48175	3.5	10833	17063			6.88	Si
SLU 38	-1.67	-66999	2403	8009.72		42539	3.5	10833	17063			7.1	Si
SLU 38	0.43	-62609	2423	5691.18		39752	3.5	10833	17063			7.04	Si
SLU 36	-1.67	-67454	2421	8099.41		42828	3.5	10833	17063			7.05	Si
SLU 36	0.43	-63071	2441	5752.83		40045	3.5	10833	17063			6.99	Si

Comb.	Quota	N	V par	M	σ0	σN	l'	fvd	Vt scorr.	Vt fess.diag.	Vt,lim	c.s.	Verifica
SLU 76	-1.67	-77439	2472	8414.87		49167	3.5	10833	17063			6.9	Si
SLU 76	0.43	-71568	2494	6513.81		45440	3.5	10833	17063			6.84	Si
SLU 34	-1.67	-65557	2307	7079.04		41623	3.5	10833	17063			7.39	Si
SLU 34	0.43	-61393	2327	5322.72		38980	3.5	10753	16936			7.28	Si
SLU 78	-1.67	-79336	2585	9435.24		50372	3.5	10833	17063			6.6	Si
SLU 78	0.43	-73246	2608	6943.93		46505	3.5	10833	17063			6.54	Si
SLU 79	-1.67	-79705	2312	9929.81		50606	3.5	10833	17063			7.38	Si
SLU 79	0.43	-73181	2333	7322.02		46464	3.5	10833	17063			7.31	Si

Verifica a taglio nel piano secondo D.M. 17-01-18 (N.T.C.) §7.8.2.2.2 con rottura per scorrimento in combinazioni sismiche, γM = 2

Comb.	Quota	N	V par	M	σ0	σN	l'	fvd	Vt scorr.	Vt fess.diag.	Vt,lim	c.s.	Verifica
SLV 16	-1.67	-56791	-20562	-26722.31		36058	3.5	15545	24483			1.19	Si
SLV 16	0.43	-45384	-20498	8959.03		28815	3.5	14096	22202			1.08	Si
SLV 15	-1.67	-56791	-20562	-26722.31		36058	3.5	15545	24483			1.19	Si
SLV 15	0.43	-45384	-20498	8959.03		28815	3.5	14096	22202			1.08	Si
SLV 1	-1.67	-50679	22809	39025.56		38308	2.9398	15995	21160			0.93	No, Vu<V
SLV 1	0.43	-51512	22772	1231.78		32706	3.5	14874	23427			1.03	Si
SLV 14	-1.67	-53995	-20697	-34322.71		35893	3.343	15512	23335			1.13	Si
SLV 14	0.43	-48561	-21598	10154.35		30833	3.5	14500	22837			1.06	Si
SLV 2	-1.67	-50679	22809	39025.56		38308	2.9398	15995	21160			0.93	No, Vu<V
SLV 2	0.43	-51512	22772	1231.78		32706	3.5	14874	23427			1.03	Si
SLV 7	-1.67	-57897	7874	29821.2		36760	3.5	15685	24704			3.14	Si
SLV 7	0.43	-43595	9626	1764.81		27680	3.5	13869	21844			2.27	Si
SLV 3	-1.67	-53475	22944	46625.96		45111	2.6342	16250	19263			0.84	No, Vu<V
SLV 3	0.43	-48335	23872	36.45		30689	3.5	14471	22792			0.95	No, Vu<V
SLV 4	-1.67	-53475	22944	46625.96		45111	2.6342	16250	19263			0.84	No, Vu<V
SLV 4	0.43	-48335	23872	36.45		30689	3.5	14471	22792			0.95	No, Vu<V
SLV 8	-1.67	-57897	7874	29821.2		36760	3.5	15685	24704			3.14	Si
SLV 8	0.43	-43595	9626	1764.81		27680	3.5	13869	21844			2.27	Si
SLV 13	-1.67	-53995	-20697	-34322.71		35893	3.343	15512	23335			1.13	Si
SLV 13	0.43	-48561	-21598	10154.35		30833	3.5	14500	22837			1.06	Si

Verifica a pressoflessione fuori piano D.M. 17-01-18 (N.T.C.)

quota -0.175 Wa 0.08 denominatore 8 γM = 2

Comb.	fd	Sa	σ0	N	M	Mc	Coeff.s.	Verifica
SLV 11	143750	0.24	28452	-44812	258.01	7734.85	29.98	Si
SLV 12	143750	0.24	28452	-44812	258.01	7734.85	29.98	Si
SLV 8	143750	0.24	28879	-45485	258.01	7815.26	30.29	Si
SLV 7	143750	0.24	28879	-45485	258.01	7815.26	30.29	Si
SLV 16	143750	0.24	30055	-47337	258.01	8031.02	31.13	Si
SLV 15	143750	0.24	30055	-47337	258.01	8031.02	31.13	Si
SLV 4	143750	0.24	31480	-49582	258.01	8281.68	32.1	Si
SLV 3	143750	0.24	31480	-49582	258.01	8281.68	32.1	Si
SLV 13	143750	0.24	31857	-50176	258.01	8346.03	32.35	Si
SLV 14	143750	0.24	31857	-50176	258.01	8346.03	32.35	Si

Verifica dei meccanismi locali di collasso con analisi cinematica lineare

forza di aggancio al piano = 0 quota mezzeria = -0.175 Wa = 0.08 Ta = 0.0332

Comb.	N top	N base	V orto	α0	M*	e*	a0*	aLim	Verifica
SLV 9	-48177	-49573	6772	0	5568.2	0.964	0	3.42705	No
SLV 10	-48177	-49573	6772	0	5568.2	0.964	0	3.42705	No
SLV 5	-50353	-48578	6898	0	5789.6	0.965	0	3.42705	No
SLV 6	-50353	-48578	6898	0	5789.6	0.965	0	3.42705	No
SLV 11	-26805	-58892	-2632	0.001	3396.3	0.944	0.01133	3.42705	No
SLV 12	-26805	-58892	-2632	0.001	3396.3	0.944	0.01133	3.42705	No
SLV 14	-38158	-53995	3334	0.004	4549.1	0.957	0.06295	3.6078	No
SLV 13	-38158	-53995	3334	0.004	4549.1	0.957	0.06295	3.6078	No
SLV 2	-45412	-50679	3754	0.006	5286.8	0.962	0.0917	3.6078	No
SLV 1	-45412	-50679	3754	0.006	5286.8	0.962	0.0917	3.6078	No

Tabella dei coefficienti di sicurezza minimi

Stato limite	Coeff.s.	Comb.	Verifica
PF_SLU	5.253	SLU 77	Si
V_SLU	6.542	SLU 78	Si
PF_SLV	1.449	SLV 3	Si
V_SLV	0.84	SLV 3	No
PFFP_SLV	29.979	SLV 11	Si
R_SLV	0	SLV 5	No

Maschio 21

Verifiche condotte secondo D.M. 17-01-18 (N.T.C.)

Dati geometrici

X ini.	Y ini.	X fin.	Y fin.	Quota i.	Quota.s	l	Sp.	h netta	h ini.	h fin.	a	a.s.,sx	a.s.,dx
-13.505	1.032	-14.135	1.032	L1	L3	0.63	0.45	2.99	2.99	2.99			

Caratteristiche del materiale

(Circolare 7 21-01-19 C8.5.I) Muratura in mattoni pieni e malta di calce LC2_Corti

fb	fk	fvk0	fmedio	τ0	fv0	μ	ϕ	fv,lim	E	G	FC
600000			345000	9000	20000	0.58	0.77	32500	320000000	128000000	1.2

Verifica a pressoflessione nel piano secondo D.M. 17-01-18 NTC §7.8.2.2.1 in combinazioni non sismiche, γM = 3

Comb.	Quota	N	M	σ0	Mu	c.s.	Verifica

Comb.	Quota	N	M	σ0	Mu	c.s.	Verifica
SLU 83	-1.67	-23463	128.84	82760	0	0	No, Rottura per schiacciamento
SLU 83	0.49	-22085	-1272.06	77901	303.84	0.239	No, M>Mu
SLU 75	-1.67	-22797	133.81	80414	92.08	0.688	No, M>Mu
SLU 75	0.49	-21160	-1224.19	74637	558.12	0.456	No, M>Mu
SLU 80	-1.67	-22945	157.73	80935	46.4	0.294	No, M>Mu
SLU 80	0.49	-21309	-1242.21	75163	518.71	0.418	No, M>Mu
SLU 77	-1.67	-22897	153.84	80764	61.51	0.4	No, M>Mu
SLU 77	0.49	-21523	-1254.44	75917	461.16	0.368	No, M>Mu
SLU 79	-1.67	-22731	152.65	80180	112.38	0.736	No, M>Mu
SLU 79	0.49	-21352	-1243.91	75314	507.31	0.408	No, M>Mu
SLU 78	-1.67	-23111	158.91	81519	0	0	No, Rottura per schiacciamento
SLU 78	0.49	-21480	-1252.74	75767	472.76	0.377	No, M>Mu
SLU 82	-1.67	-23363	108.81	82411	0	0	No, Rottura per schiacciamento
SLU 82	0.49	-21722	-1241.82	76621	406.36	0.327	No, M>Mu
SLU 81	-1.67	-23149	103.74	81655	0	0	No, Rottura per schiacciamento
SLU 81	0.49	-21765	-1243.52	76771	394.48	0.317	No, M>Mu
SLU 84	-1.67	-23677	133.92	83516	0	0	No, Rottura per schiacciamento
SLU 84	0.49	-22042	-1270.36	77750	316.1	0.249	No, M>Mu
SLU 74	-1.67	-22583	128.74	79658	157.19	1.221	Si
SLU 74	0.49	-21202	-1225.89	74788	546.89	0.446	No, M>Mu

Verifica a pressoflessione nel piano secondo D.M. 17-01-18 NTC §7.8.2.2.1 in combinazioni sismiche, γM = 2

Comb.	Quota	N	M	σ0	Mu	c.s.	Verifica
SLV 2	-1.67	-11445	2210.02	40369	2414	1.092	Si
SLV 2	0.49	-11335	-1551.93	39983	2402.19	1.548	Si
SLV 16	-1.67	-19243	-2059.17	67875	2694.31	1.308	Si
SLV 16	0.49	-17161	-90.71	60533	2727.68	30.072	Si
SLV 15	-1.67	-19243	-2059.17	67875	2694.31	1.308	Si
SLV 15	0.49	-17161	-90.71	60533	2727.68	30.072	Si
SLV 13	-1.67	-15758	-2079.8	55585	2705.74	1.301	Si
SLV 13	0.49	-18211	-201.12	64237	2720.69	13.527	Si
SLV 14	-1.67	-15758	-2079.8	55585	2705.74	1.301	Si
SLV 14	0.49	-18211	-201.12	64237	2720.69	13.527	Si
SLV 3	-1.67	-14929	2230.65	52659	2675.91	1.2	Si
SLV 3	0.49	-10285	-1441.52	36279	2277.86	1.58	Si
SLV 6	-1.67	-8890	684.51	31357	2081.62	3.041	Si
SLV 6	0.49	-14967	-1207.97	52793	2677.56	2.217	Si
SLV 1	-1.67	-11445	2210.02	40369	2414	1.092	Si
SLV 1	0.49	-11335	-1551.93	39983	2402.19	1.548	Si
SLV 4	-1.67	-14929	2230.65	52659	2675.91	1.2	Si
SLV 4	0.49	-10285	-1441.52	36279	2277.86	1.58	Si
SLV 5	-1.67	-8890	684.51	31357	2081.62	3.041	Si
SLV 5	0.49	-14967	-1207.97	52793	2677.56	2.217	Si

Verifica a taglio nel piano secondo D.M. 17-01-18 (N.T.C.) §7.8.2.2.2 con rottura per scorrimento in combinazioni non sismiche, γM = 3

Comb.	Quota	N	V par	M	σ0	σN	I'	fvd	Vt scorr.	Vt fess.diag.	Vt,lim	c.s.	Verifica
SLU 49	-1.67	-18485	79	147.13		65202	0.63	10833	3071			39.04	Si
SLU 49	0.49	-16769	228	-994.61		59149	0.63	10833	3071			13.46	Si
SLU 72	-1.67	-20507	68	154.71		72335	0.63	10833	3071			45.22	Si
SLU 72	0.49	-18851	231	-1109.92		66493	0.63	10833	3071			13.32	Si
SLU 70	-1.67	-20673	69	155.9		72919	0.63	10833	3071			44.58	Si
SLU 70	0.49	-19022	235	-1120.44		67097	0.63	10833	3071			13.05	Si
SLU 77	-1.67	-22897	36	153.84		80764	0.63	10833	3071			85.1	Si
SLU 77	0.49	-21523	230	-1254.44		75917	0.63	10833	3071			13.36	Si
SLU 69	-1.67	-20458	56	150.82		72163	0.63	10833	3071			54.55	Si
SLU 69	0.49	-19065	231	-1122.15		67247	0.63	10833	3071			13.31	Si
SLU 67	-1.67	-20359	46	130.79		71814	0.63	10833	3071			66.45	Si
SLU 67	0.49	-18702	228	-1091.9		65967	0.63	10833	3071			13.48	Si
SLU 75	-1.67	-22797	26	133.81		80414	0.63	10833	3071			118.09	Si
SLU 75	0.49	-21160	227	-1224.19		74637	0.63	10833	3071			13.54	Si
SLU 80	-1.67	-22945	48	157.73		80935	0.63	10833	3071			64.38	Si
SLU 80	0.49	-21309	230	-1242.21		75163	0.63	10833	3071			13.38	Si
SLU 78	-1.67	-23111	49	158.91		81519	0.63	10833	3071			63.1	Si
SLU 78	0.49	-21480	234	-1252.74		75767	0.63	10833	3071			13.11	Si
SLU 57	-1.67	-20923	58	150.14		73802	0.63	10833	3071			52.53	Si
SLU 57	0.49	-19227	227	-1126.9		67819	0.63	10833	3071			13.52	Si

Verifica a taglio nel piano secondo D.M. 17-01-18 (N.T.C.) §7.8.2.2.2 con rottura per scorrimento in combinazioni sismiche, γM = 2

Comb.	Quota	N	V par	M	σ0	σN	I'	fvd	Vt scorr.	Vt fess.diag.	Vt,lim	c.s.	Verifica
SLV 15	-1.67	-19243	-1866	-2059.17		68531	0.624	16250	4563			2.45	Si
SLV 15	0.49	-17161	504	-90.71		60533	0.63	16250	4607			9.14	Si
SLV 9	-1.67	-10184	-790	-602.44		35922	0.63	15518	4399			5.57	Si
SLV 9	0.49	-17030	-98	-802.73		60069	0.63	16250	4607			47.1	Si
SLV 14	-1.67	-15758	-1994	-2079.8		63780	0.5491	16250	4015			2.01	Si
SLV 14	0.49	-18211	305	-201.12		64237	0.63	16250	4607			15.09	Si
SLV 4	-1.67	-14929	2002	2230.65		66785	0.4967	16250	3632			1.81	Si
SLV 4	0.49	-10285	16	-1441.52		43573	0.5245	16250	3836			243.06	Si
SLV 13	-1.67	-15758	-1994	-2079.8		63780	0.5491	16250	4015			2.01	Si
SLV 13	0.49	-18211	305	-201.12		64237	0.63	16250	4607			15.09	Si
SLV 16	-1.67	-19243	-1866	-2059.17		68531	0.624	16250	4563			2.45	Si
SLV 16	0.49	-17161	504	-90.71		60533	0.63	16250	4607			9.14	Si
SLV 3	-1.67	-14929	2002	2230.65		66785	0.4967	16250	3632			1.81	Si
SLV 3	0.49	-10285	16	-1441.52		43573	0.5245	16250	3836			243.06	Si
SLV 1	-1.67	-11445	1874	2210.02		69548	0.3657	16250	2674			1.43	Si
SLV 1	0.49	-11335	-183	-1551.93		47148	0.5343	16250	3907			21.33	Si

Comb.	Quota	N	V par	M	σ0	σN	l'	fvd	Vt scorr.	Vt fess.diag.	Vt,lim	c.s.	Verifica
SLV 10	-1.67	-10184	-790	-602.44		35922	0.63	15518	4399			5.57	Si
SLV 10	0.49	-17030	-98	-802.73		60069	0.63	16250	4607			47.1	Si
SLV 2	-1.67	-11445	1874	2210.02		69548	0.3657	16250	2674			1.43	Si
SLV 2	0.49	-11335	-183	-1551.93		47148	0.5343	16250	3907			21.33	Si

Verifica a pressoflessione fuori piano D.M. 17-01-18 (N.T.C.)

quota -0.175 Wa 0.08 denominatore 8 γM = 2

Comb.	fd	Sa	σ0	N	M	Mc	Coeff.s.	Verifica
SLV 3	143750	0.24	38034	-10783	46.44	1670.9	35.98	Si
SLV 4	143750	0.24	38034	-10783	46.44	1670.9	35.98	Si
SLV 1	143750	0.24	41132	-11661	46.44	1740.49	37.48	Si
SLV 2	143750	0.24	41132	-11661	46.44	1740.49	37.48	Si
SLV 7	143750	0.24	45275	-12835	46.44	1817.87	39.14	Si
SLV 8	143750	0.24	45275	-12835	46.44	1817.87	39.14	Si
SLV 13	143750	0.24	72150	-20454	46.44	1884.7	40.58	Si
SLV 14	143750	0.24	72150	-20454	46.44	1884.7	40.58	Si
SLV 15	143750	0.24	69051	-19576	46.44	1915.45	41.24	Si
SLV 16	143750	0.24	69051	-19576	46.44	1915.45	41.24	Si

Verifica dei meccanismi locali di collasso con analisi cinematica lineare

forza di aggancio al piano = 0 quota mezzeria = -0.175 Wa = 0.08 Ta = 0.0332

Comb.	N top	N base	V orto	α0	M*	e*	a0*	aLim	Verifica
SLV 5	-15899	-8890	1262	0.003	1738.2	0.979	0.0442	3.42705	No
SLV 6	-15899	-8890	1262	0.003	1738.2	0.979	0.0442	3.42705	No
SLV 9	-17399	-10184	1339	0.005	1891.1	0.98	0.06944	3.42705	No
SLV 10	-17399	-10184	1339	0.005	1891.1	0.98	0.06944	3.42705	No
SLV 1	-11203	-11445	767	0.016	1259.9	0.971	0.23905	3.6078	No
SLV 2	-11203	-11445	767	0.016	1259.9	0.971	0.23905	3.6078	No
SLV 13	-16204	-15758	1025	0.018	1769.3	0.979	0.2707	3.6078	No
SLV 14	-16204	-15758	1025	0.018	1769.3	0.979	0.2707	3.6078	No
SLV 16	-13679	-19243	678	0.032	1512.1	0.976	0.48085	3.6078	No
SLV 15	-13679	-19243	678	0.032	1512.1	0.976	0.48085	3.6078	No

Tabella dei coefficienti di sicurezza minimi

Stato limite	Coeff.s.	Comb.	Verifica
PF_SLU	0	SLU 78	No
V_SLU	13.052	SLU 70	Si
PF_SLV	1.092	SLV 1	Si
V_SLV	1.427	SLV 1	Si
PFFP_SLV	35.978	SLV 3	Si
R_SLV	0.013	SLV 5	No

Maschio 22

Verifiche condotte secondo D.M. 17-01-18 (N.T.C.)

Dati geometrici

X ini.	Y ini.	X fin.	Y fin.	Quota i.	Quota.s	l	Sp.	h netta	h ini.	h fin.	a	a.s.,sx	a.s.,dx
-12.235	1.032	-12.535	1.032	L1	L3	0.299	0.45	2.99	2.99	2.99			

Caratteristiche del materiale

(Circolare 7 21-01-19 C8.5.I) Muratura in mattoni pieni e malta di calce LC2_Corti

fb	fk	fvk0	fmedio	τ0	fv0	μ	ϕ	fv,lim	E	G	FC
600000			345000	9000	20000	0.58	0.77	32500	320000000	128000000	1.2

Verifica a pressoflessione nel piano secondo D.M. 17-01-18 NTC §7.8.2.2.1 in combinazioni non sismiche, γM = 3

Comb.	Quota	N	M	σ0	Mu	c.s.	Verifica
SLU 83	-1.67	-6969	-34.54	51714	381.02	11.03	Si
SLU 83	0.49	-5194	-39.46	38541	409.72	10.383	Si
SLU 81	-1.67	-6872	-36.18	50994	384.8	10.635	Si
SLU 81	0.49	-5114	-37.99	37951	408.99	10.765	Si
SLU 84	-1.67	-6984	-34.13	51827	380.4	11.147	Si
SLU 84	0.49	-5207	-39.69	38638	409.82	10.326	Si
SLU 80	-1.67	-6782	-30.92	50331	388.07	12.551	Si
SLU 80	0.49	-5034	-39.14	37359	408.09	10.427	Si
SLU 78	-1.67	-6826	-31.5	50657	386.49	12.269	Si
SLU 78	0.49	-5070	-39.28	37625	408.52	10.399	Si
SLU 82	-1.67	-6887	-35.77	51108	384.22	10.743	Si
SLU 82	0.49	-5127	-38.22	38047	409.12	10.704	Si
SLU 75	-1.67	-6729	-33.14	49938	389.9	11.764	Si
SLU 75	0.49	-4991	-37.82	37035	407.52	10.776	Si
SLU 79	-1.67	-6767	-31.34	50217	388.6	12.401	Si
SLU 79	0.49	-5021	-38.91	37262	407.93	10.483	Si
SLU 77	-1.67	-6811	-31.92	50544	387.04	12.126	Si
SLU 77	0.49	-5057	-39.06	37529	408.37	10.456	Si
SLU 76	-1.67	-6696	-32.28	49687	391.03	12.113	Si
SLU 76	0.49	-4963	-37.82	36832	407.14	10.764	Si

Verifica a pressoflessione nel piano secondo D.M. 17-01-18 NTC §7.8.2.2.1 in combinazioni sismiche, γM = 2

Comb.	Quota	N	M	σ0	Mu	c.s.	Verifica
SLV 2	-1.67	-4611	232.59	34213	497.04	2.137	Si
SLV 2	0.49	-3455	-129.51	25640	408.79	3.156	Si
SLV 16	-1.67	-4554	-280.94	33794	493.29	1.756	Si
SLV 16	0.49	-3230	80.49	23968	388.75	4.83	Si
SLV 15	-1.67	-4554	-280.94	33794	493.29	1.756	Si

Comb.	Quota	N	M	σ0	Mu	c.s.	Verifica
SLV 15	0.49	-3230	80.49	23968	388.75	4.83	Si
SLV 12	-1.67	-5387	-116.02	39977	542.72	4.678	Si
SLV 12	0.49	-3859	4.84	28639	442.42	91.369	Si
SLV 1	-1.67	-4611	232.59	34213	497.04	2.137	Si
SLV 1	0.49	-3455	-129.51	25640	408.79	3.156	Si
SLV 3	-1.67	-5147	222.82	38193	529.76	2.377	Si
SLV 3	0.49	-3818	-130.93	28334	439.14	3.354	Si
SLV 13	-1.67	-4018	-271.17	29814	454.79	1.677	Si
SLV 13	0.49	-2867	81.91	21274	354.51	4.328	Si
SLV 14	-1.67	-4018	-271.17	29814	454.79	1.677	Si
SLV 14	0.49	-2867	81.91	21274	354.51	4.328	Si
SLV 11	-1.67	-5387	-116.02	39977	542.72	4.678	Si
SLV 11	0.49	-3859	4.84	28639	442.42	91.369	Si
SLV 4	-1.67	-5147	222.82	38193	529.76	2.377	Si
SLV 4	0.49	-3818	-130.93	28334	439.14	3.354	Si

Verifica a taglio nel piano secondo D.M. 17-01-18 (N.T.C.) §7.8.2.2.2 con rottura per scorrimento in combinazioni non sismiche, γM = 3

Comb.	Quota	N	V par	M	σ0	σN	I'	fvd	Vt scorr.	Vt fess.diag.	Vt,lim	c.s.	Verifica
SLU 78	-1.67	-6826	-44	-31.5		50657	0.2995	10833	1460			33.43	Si
SLU 78	0.49	-5070	-122	-39.28		37625	0.2995	10572	1425			11.64	Si
SLU 84	-1.67	-6984	-47	-34.13		51827	0.2995	10833	1460			31.37	Si
SLU 84	0.49	-5207	-125	-39.69		38638	0.2995	10707	1443			11.53	Si
SLU 82	-1.67	-6887	-48	-35.77		51108	0.2995	10833	1460			30.41	Si
SLU 82	0.49	-5127	-123	-38.22		38047	0.2995	10629	1432			11.6	Si
SLU 79	-1.67	-6767	-43	-31.34		50217	0.2995	10833	1460			33.66	Si
SLU 79	0.49	-5021	-121	-38.91		37262	0.2995	10524	1418			11.74	Si
SLU 83	-1.67	-6969	-47	-34.54		51714	0.2995	10833	1460			31.1	Si
SLU 83	0.49	-5194	-124	-39.46		38541	0.2995	10694	1441			11.58	Si
SLU 75	-1.67	-6729	-45	-33.14		49938	0.2995	10833	1460			32.35	Si
SLU 75	0.49	-4991	-121	-37.82		37035	0.2995	10494	1414			11.72	Si
SLU 81	-1.67	-6872	-48	-36.18		50994	0.2995	10833	1460			30.16	Si
SLU 81	0.49	-5114	-123	-37.99		37951	0.2995	10616	1431			11.65	Si
SLU 76	-1.67	-6696	-44	-32.28		49687	0.2995	10833	1460			33.05	Si
SLU 76	0.49	-4963	-120	-37.82		36832	0.2995	10467	1410			11.73	Si
SLU 77	-1.67	-6811	-44	-31.92		50544	0.2995	10833	1460			33.13	Si
SLU 77	0.49	-5057	-122	-39.06		37529	0.2995	10559	1423			11.69	Si
SLU 80	-1.67	-6782	-43	-30.92		50331	0.2995	10833	1460			33.97	Si
SLU 80	0.49	-5034	-122	-39.14		37359	0.2995	10537	1420			11.68	Si

Verifica a taglio nel piano secondo D.M. 17-01-18 (N.T.C.) §7.8.2.2.2 con rottura per scorrimento in combinazioni sismiche, γM = 2

Comb.	Quota	N	V par	M	σ0	σN	I'	fvd	Vt scorr.	Vt fess.diag.	Vt,lim	c.s.	Verifica
SLV 4	-1.67	-5147	215	222.82		38193	0.2995	15972	2152			10.03	Si
SLV 4	0.49	-3818	-65	-130.93		28334	0.2995	14000	1887			29.12	Si
SLV 12	-1.67	-5387	-121	-116.02		39977	0.2995	16250	2190			18.09	Si
SLV 12	0.49	-3859	-102	4.84		28639	0.2995	14061	1895			18.52	Si
SLV 11	-1.67	-5387	-121	-116.02		39977	0.2995	16250	2190			18.09	Si
SLV 11	0.49	-3859	-102	4.84		28639	0.2995	14061	1895			18.52	Si
SLV 3	-1.67	-5147	215	222.82		38193	0.2995	15972	2152			10.03	Si
SLV 3	0.49	-3818	-65	-130.93		28334	0.2995	14000	1887			29.12	Si
SLV 2	-1.67	-4611	223	232.59		34399	0.2978	15213	2039			9.16	Si
SLV 2	0.49	-3455	-56	-129.51		25640	0.2995	13461	1814			32.35	Si
SLV 1	-1.67	-4611	223	232.59		34399	0.2978	15213	2039			9.16	Si
SLV 1	0.49	-3455	-56	-129.51		25640	0.2995	13461	1814			32.35	Si
SLV 14	-1.67	-4018	-279	-271.17		36189	0.2467	15571	1729			6.19	Si
SLV 14	0.49	-2867	-98	81.91		21274	0.2995	12588	1696			17.28	Si
SLV 15	-1.67	-4554	-287	-280.94		38316	0.2641	15997	1901			6.62	Si
SLV 15	0.49	-3230	-107	80.49		23968	0.2995	13127	1769			16.55	Si
SLV 13	-1.67	-4018	-279	-271.17		36189	0.2467	15571	1729			6.19	Si
SLV 13	0.49	-2867	-98	81.91		21274	0.2995	12588	1696			17.28	Si
SLV 16	-1.67	-4554	-287	-280.94		38316	0.2641	15997	1901			6.62	Si
SLV 16	0.49	-3230	-107	80.49		23968	0.2995	13127	1769			16.55	Si

Verifica a pressoflessione fuori piano D.M. 17-01-18 (N.T.C.)

quota -0.175 Wa 0.08 denominatore 8 γM = 2

Comb.	fd	Sa	σ0	N	M	Mc	Coeff.s.	Verifica
SLV 9	143750	0.24	36457	-4913	22.08	775.58	35.13	Si
SLV 10	143750	0.24	36457	-4913	22.08	775.58	35.13	Si
SLV 5	143750	0.24	38390	-5173	22.08	798.29	36.16	Si
SLV 6	143750	0.24	38390	-5173	22.08	798.29	36.16	Si
SLV 14	143750	0.24	39071	-5265	22.08	805.84	36.5	Si
SLV 13	143750	0.24	39071	-5265	22.08	805.84	36.5	Si
SLV 16	143750	0.24	43244	-5827	22.08	847.13	38.37	Si
SLV 15	143750	0.24	43244	-5827	22.08	847.13	38.37	Si
SLV 2	143750	0.24	45514	-6133	22.08	865.96	39.23	Si
SLV 1	143750	0.24	45514	-6133	22.08	865.96	39.23	Si

Verifica dei meccanismi locali di collasso con analisi cinematica lineare

forza di aggancio al piano = 0 quota mezzeria = -0.175 Wa = 0.08 Ta = 0.0332

Comb.	N top	N base	V orto	α0	M*	e*	a0*	aLim	Verifica
SLV 6	-318	-3777	-419	0	94.6	0.889	0	3.42705	No
SLV 8	-526	-5565	-110	0	113.8	0.892	0	3.42705	No
SLV 4	-458	-5147	-223	0	107.4	0.89	0	3.6078	No
SLV 1	-396	-4611	-315	0	101.6	0.889	0	3.6078	No
SLV 3	-458	-5147	-223	0	107.4	0.89	0	3.6078	No
SLV 7	-526	-5565	-110	0	113.8	0.892	0	3.42705	No
SLV 2	-396	-4611	-315	0	101.6	0.889	0	3.6078	No
SLV 10	-314	-3599	-416	0	94.2	0.889	0	3.42705	No
SLV 9	-314	-3599	-416	0	94.2	0.889	0	3.42705	No
SLV 5	-318	-3777	-419	0	94.6	0.889	0	3.42705	No

Tabella dei coefficienti di sicurezza minimi

Stato limite	Coeff.s.	Comb.	Verifica
PF_SLU	10.326	SLU 84	Si
V_SLU	11.526	SLU 84	Si
PF_SLV	1.677	SLV 13	Si
V_SLV	6.193	SLV 13	Si
PFFP_SLV	35.133	SLV 9	Si
R_SLV	0	SLV 1	No

Maschio 23

Verifiche condotte secondo D.M. 17-01-18 (N.T.C.)

Dati geometrici

X ini.	Y ini.	X fin.	Y fin.	Quota i.	Quota.s	l	Sp.	h netta	h ini.	h fin.	a	a.s.,sx	a.s.,dx
-6.135	1.032	-11.235	1.032	L1	L3	5.101	0.45	2.99	2.99	2.99			

Caratteristiche del materiale

(Circolare 7 21-01-19 C8.5.I) Muratura in mattoni pieni e malta di calce LC2_Corti

fb	fk	fvk0	fmedio	τ0	fv0	μ	ϕ	fv,lim	E	G	FC
600000			345000	9000	20000	0.58	0.77	32500	320000000	128000000	1.2

Verifica a pressoflessione nel piano secondo D.M. 17-01-18 NTC §7.8.2.2.1 in combinazioni non sismiche, γM = 3

Comb.	Quota	N	M	σ0	Mu	c.s.	Verifica
SLU 74	-1.67	-113133	-9340.1	49290	113937.37	12.199	Si
SLU 74	0.49	-92726	3521.49	40399	119196.02	33.848	Si
SLU 77	-1.67	-114695	-9121.26	49971	113066.89	12.396	Si
SLU 77	0.49	-94157	3725.66	41023	119197.65	31.994	Si
SLU 79	-1.67	-114008	-8960.08	49672	113457.63	12.663	Si
SLU 79	0.49	-93545	3673.12	40756	119203.78	32.453	Si
SLU 60	-1.67	-104993	-8679.1	45744	117396.81	13.526	Si
SLU 60	0.49	-85211	3240	37125	118270.34	36.503	Si
SLU 83	-1.67	-117960	-9776.58	51393	111031.81	11.357	Si
SLU 83	0.49	-97275	3445.72	42381	119007.73	34.538	Si
SLU 81	-1.67	-116398	-9995.41	50713	112041.42	11.209	Si
SLU 81	0.49	-95845	3241.55	41758	119127.77	36.75	Si
SLU 62	-1.67	-106555	-8460.27	46424	116873.14	13.814	Si
SLU 62	0.49	-86641	3444.16	37748	118565.23	34.425	Si
SLU 39	-1.67	-99418	-8799.45	43315	118723.36	13.492	Si
SLU 39	0.49	-82955	2476.41	36142	117691.77	47.525	Si
SLU 82	-1.67	-115533	-7880.54	50336	112572.18	14.285	Si
SLU 82	0.49	-95496	3870.18	41606	119148.59	30.786	Si
SLU 41	-1.67	-100980	-8580.61	43995	118437.22	13.803	Si
SLU 41	0.49	-84385	2680.58	36765	118074.69	44.048	Si

Verifica a pressoflessione nel piano secondo D.M. 17-01-18 NTC §7.8.2.2.1 in combinazioni sismiche, γM = 2

Comb.	Quota	N	M	σ0	Mu	c.s.	Verifica
SLV 2	-1.67	-76098	49922.99	33155	141410.84	2.833	Si
SLV 2	0.49	-64924	11964.45	28286	127243.22	10.635	Si
SLV 3	-1.67	-82720	43064.28	36040	148735.15	3.454	Si
SLV 3	0.49	-62695	11246.65	27315	124145.34	11.038	Si
SLV 12	-1.67	-86753	-33524.36	37797	152805.18	4.558	Si
SLV 12	0.49	-57220	-1379.6	24930	116153.32	84.193	Si
SLV 15	-1.67	-77039	-62453.88	33565	142500.34	2.282	Si
SLV 15	0.49	-58273	-6889.99	25389	117732.83	17.088	Si
SLV 4	-1.67	-82720	43064.28	36040	148735.15	3.454	Si
SLV 4	0.49	-62695	11246.65	27315	124145.34	11.038	Si
SLV 13	-1.67	-70417	-55595.17	30680	134491.85	2.419	Si
SLV 13	0.49	-60502	-6172.19	26360	121009.96	19.606	Si
SLV 1	-1.67	-76098	49922.99	33155	141410.84	2.833	Si
SLV 1	0.49	-64924	11964.45	28286	127243.22	10.635	Si
SLV 11	-1.67	-86753	-33524.36	37797	152805.18	4.558	Si
SLV 11	0.49	-57220	-1379.6	24930	116153.32	84.193	Si
SLV 14	-1.67	-70417	-55595.17	30680	134491.85	2.419	Si
SLV 14	0.49	-60502	-6172.19	26360	121009.96	19.606	Si
SLV 16	-1.67	-77039	-62453.88	33565	142500.34	2.282	Si
SLV 16	0.49	-58273	-6889.99	25389	117732.83	17.088	Si

Verifica a taglio nel piano secondo D.M. 17-01-18 (N.T.C.) §7.8.2.2.2 con rottura per scorrimento in combinazioni non sismiche, γM = 3

Comb.	Quota	N	V par	M	σ0	σN	l'	fvd	Vt scorr.	Vt fess.diag.	Vt,lim	c.s.	Verifica
SLU 55	-1.67	-99599	-2452	-4337.8		43394	5.1005	10833	24865			10.14	Si
SLU 55	0.49	-80899	372	4515.11		35247	5.1005	10255	23538			63.24	Si
SLU 61	-1.67	-104128	-2525	-6564.22		45367	5.1005	10833	24865			9.85	Si
SLU 61	0.49	-84862	496	3868.63		36973	5.1005	10485	24066			48.55	Si
SLU 31	-1.67	-92462	-2449	-4676.98		40284	5.1005	10833	24865			10.15	Si
SLU 31	0.49	-77213	212	3547.35		33640	5.1005	10041	23046			108.71	Si
SLU 73	-1.67	-109442	-2791	-5872.95		47682	5.1005	10833	24865			8.91	Si
SLU 73	0.49	-90103	365	4312.5		39256	5.1005	10790	24765			67.78	Si
SLU 65	-1.67	-96577	-2446	-4478.39		42077	5.1005	10833	24865			10.17	Si
SLU 65	0.49	-78063	325	4366.69		34011	5.1005	10090	23160			71.36	Si
SLU 52	-1.67	-98037	-2591	-4556.64		42713	5.1005	10833	24865			9.6	Si
SLU 52	0.49	-79469	203	4310.94		34623	5.1005	10172	23347			115.2	Si
SLU 75	-1.67	-112267	-2523	-7225.22		48913	5.1005	10833	24865			9.86	Si
SLU 75	0.49	-92378	763	4150.12		40247	5.1005	10833	24865			32.58	Si
SLU 84	-1.67	-117095	-2586	-7661.7		51016	5.1005	10833	24865			9.61	Si
SLU 84	0.49	-96926	828	4074.35		42229	5.1005	10833	24865			30.03	Si
SLU 82	-1.67	-115533	-2725	-7880.54		50336	5.1005	10833	24865			9.12	Si

Comb.	Quota	N	V par	M	σ0	σN	l'	fvd	Vt scorr.	Vt fess.diag.	Vt,lim	c.s.	Verifica
SLU 82	0.49	-95496	658	3870.18		41606	5.1005	10833	24865			37.76	Si
SLU 76	-1.67	-111004	-2652	-5654.12		48363	5.1005	10833	24865			9.38	Si
SLU 76	0.49	-91533	535	4516.67		39880	5.1005	10833	24865			46.48	Si

Verifica a taglio nel piano secondo D.M. 17-01-18 (N.T.C.) §7.8.2.2.2 con rottura per scorrimento in combinazioni sismiche, γM = 2

Comb.	Quota	N	V par	M	σ0	σN	l'	fvd	Vt scorr.	Vt fess.diag.	Vt,lim	c.s.	Verifica
SLV 16	-1.67	-77039	-33109	-62453.88		33565	5.1005	15046	34535			1.04	Si
SLV 16	0.49	-58273	-25368	-6889.99		25389	5.1005	13411	30782			1.21	Si
SLV 13	-1.67	-70417	-32018	-55595.17		30680	5.1005	14469	33210			1.04	Si
SLV 13	0.49	-60502	-24379	-6172.19		26360	5.1005	13605	31227			1.28	Si
SLV 1	-1.67	-76098	30060	49922.99		33155	5.1005	14964	34347			1.14	Si
SLV 1	0.49	-64924	26879	11964.45		28286	5.1005	13991	32112			1.19	Si
SLV 4	-1.67	-82720	28969	43064.28		36040	5.1005	15541	35671			1.23	Si
SLV 4	0.49	-62695	25890	11246.65		27315	5.1005	13796	31666			1.22	Si
SLV 14	-1.67	-70417	-32018	-55595.17		30680	5.1005	14469	33210			1.04	Si
SLV 14	0.49	-60502	-24379	-6172.19		26360	5.1005	13605	31227			1.28	Si
SLV 15	-1.67	-77039	-33109	-62453.88		33565	5.1005	15046	34535			1.04	Si
SLV 15	0.49	-58273	-25368	-6889.99		25389	5.1005	13411	30782			1.21	Si
SLV 2	-1.67	-76098	30060	49922.99		33155	5.1005	14964	34347			1.14	Si
SLV 2	0.49	-64924	26879	11964.45		28286	5.1005	13991	32112			1.19	Si
SLV 3	-1.67	-82720	28969	43064.28		36040	5.1005	15541	35671			1.23	Si
SLV 3	0.49	-62695	25890	11246.65		27315	5.1005	13796	31666			1.22	Si
SLV 11	-1.67	-86753	-12654	-33524.36		37797	5.1005	15893	36478			2.88	Si
SLV 11	0.49	-57220	-8581	-1379.6		24930	5.1005	13319	30571			3.56	Si
SLV 12	-1.67	-86753	-12654	-33524.36		37797	5.1005	15893	36478			2.88	Si
SLV 12	0.49	-57220	-8581	-1379.6		24930	5.1005	13319	30571			3.56	Si

Verifica a pressoflessione fuori piano D.M. 17-01-18 (N.T.C.)

quota -0.175 Wa 0.08 denominatore 8 γM = 2

Comb.	fd	Sa	σ0	N	M	Mc	Coeff.s.	Verifica
SLV 14	143750	0.24	28446	-65289	376	11270.21	29.97	Si
SLV 13	143750	0.24	28446	-65289	376	11270.21	29.97	Si
SLV 10	143750	0.24	28632	-65717	376	11321.45	30.11	Si
SLV 9	143750	0.24	28632	-65717	376	11321.45	30.11	Si
SLV 15	143750	0.24	29011	-66586	376	11424.83	30.39	Si
SLV 16	143750	0.24	29011	-66586	376	11424.83	30.39	Si
SLV 5	143750	0.24	29356	-67380	376	11518.09	30.63	Si
SLV 6	143750	0.24	29356	-67380	376	11518.09	30.63	Si
SLV 11	143750	0.24	30515	-70040	376	11823.36	31.45	Si
SLV 12	143750	0.24	30515	-70040	376	11823.36	31.45	Si

Verifica dei meccanismi locali di collasso con analisi cinematica lineare

forza di aggancio al piano = 0 quota mezzeria = -0.175 Wa = 0.08 Ta = 0.0332

Comb.	N top	N base	V orto	α0	M*	e*	a0*	aLim	Verifica
SLV 6	-70614	-66384	5295	0.012	8155.8	0.964	0.18613	3.42705	No
SLV 5	-70614	-66384	5295	0.012	8155.8	0.964	0.18613	3.42705	No
SLV 10	-68462	-64680	5076	0.013	7936.8	0.963	0.20313	3.42705	No
SLV 9	-68462	-64680	5076	0.013	7936.8	0.963	0.20313	3.42705	No
SLV 1	-66439	-76098	3871	0.028	7730.9	0.963	0.42787	3.6078	No
SLV 2	-66439	-76098	3871	0.028	7730.9	0.963	0.42787	3.6078	No
SLV 14	-59265	-70417	3143	0.034	7001.3	0.959	0.52028	3.6078	No
SLV 13	-59265	-70417	3143	0.034	7001.3	0.959	0.52028	3.6078	No
SLV 4	-60708	-82720	2433	0.046	7148	0.96	0.69398	3.6078	No
SLV 3	-60708	-82720	2433	0.046	7148	0.96	0.69398	3.6078	No

Tabella dei coefficienti di sicurezza minimi

Stato limite	Coeff.s.	Comb.	Verifica
PF_SLU	11.209	SLU 81	Si
V_SLU	8.909	SLU 73	Si
PF_SLV	2.282	SLV 15	Si
V_SLV	1.037	SLV 13	Si
PFFP_SLV	29.974	SLV 13	Si
R_SLV	0.054	SLV 5	No

Maschio 24

Verifiche condotte secondo D.M. 17-01-18 (N.T.C.)

Dati geometrici

X ini.	Y ini.	X fin.	Y fin.	Quota i.	Quota.s	l	Sp.	h netta	h ini.	h fin.	a	a.s.,sx	a.s.,dx
-0.123	1.032	-5.135	1.032	L1	L3	5.012	0.45	2.99	2.99	2.99			

Caratteristiche del materiale

(Circolare 7 21-01-19 C8.5.I) Muratura in mattoni pieni e malta di calce LC2_Corti

fb	fk	fvk0	fmedio	τ0	fv0	μ	ϕ	fv,lim	E	G	FC
600000			345000	9000	20000	0.58	0.77	32500	320000000	128000000	1.2

Verifica a pressoflessione nel piano secondo D.M. 17-01-18 NTC §7.8.2.2.1 in combinazioni non sismiche, γM = 3

Comb.	Quota	N	M	σ0	Mu	c.s.	Verifica
SLU 75	-1.67	-71011	-27974.33	31484	109179.78	3.903	Si
SLU 75	0.43	-62247	7664.8	27598	103146.52	13.457	Si
SLU 80	-1.67	-71365	-27969.31	31640	109379.31	3.911	Si
SLU 80	0.43	-62577	7784.21	27744	103411.62	13.285	Si
SLU 82	-1.67	-73215	-28374.25	32461	110367.19	3.89	Si
SLU 82	0.43	-64699	8183.19	28685	105045.66	12.837	Si

Comb.	Quota	N	M	σ0	Mu	c.s.	Verifica
SLU 83	-1.67	-74146	-28753.12	32874	110829.3	3.855	Si
SLU 83	0.43	-65654	8721.84	29108	105740.67	12.124	Si
SLU 77	-1.67	-71943	-28353.21	31897	109697.9	3.869	Si
SLU 77	0.43	-63202	8203.44	28021	103905.38	12.666	Si
SLU 79	-1.67	-71622	-28009.5	31754	109522.18	3.91	Si
SLU 79	0.43	-62856	8137.36	27868	103633.37	12.736	Si
SLU 74	-1.67	-71268	-28014.53	31598	109325.13	3.902	Si
SLU 74	0.43	-62526	8017.94	27722	103370.78	12.892	Si
SLU 84	-1.67	-73889	-28712.93	32760	110704.14	3.856	Si
SLU 84	0.43	-65375	8368.69	28985	105540.2	12.611	Si
SLU 78	-1.67	-71686	-28313.01	31783	109557.28	3.87	Si
SLU 78	0.43	-62923	7850.3	27898	103686.26	13.208	Si
SLU 81	-1.67	-73472	-28414.45	32575	110497.08	3.889	Si
SLU 81	0.43	-64978	8536.34	28809	105251.27	12.33	Si

Verifica a pressoflessione nel piano secondo D.M. 17-01-18 NTC §7.8.2.2.1 in combinazioni sismiche, γM = 2

Comb.	Quota	N	M	σ0	Mu	c.s.	Verifica
SLV 13	-1.67	-55265	-63389.13	24503	110727.27	1.747	Si
SLV 13	0.43	-54612	1418.26	24213	109742.75	77.379	Si
SLV 4	-1.67	-42794	24902.36	18973	90592.69	3.638	Si
SLV 4	0.43	-29117	8116.41	12909	65260.93	8.041	Si
SLV 15	-1.67	-49987	-63716.86	22162	102550.45	1.609	Si
SLV 15	0.43	-48071	4606.2	21313	99457.38	21.592	Si
SLV 16	-1.67	-49987	-63716.86	22162	102550.45	1.609	Si
SLV 16	0.43	-48071	4606.2	21313	99457.38	21.592	Si
SLV 12	-1.67	-41311	-33082.47	18315	88010.15	2.66	Si
SLV 12	0.43	-33805	9554.04	14988	74327.92	7.78	Si
SLV 11	-1.67	-41311	-33082.47	18315	88010.15	2.66	Si
SLV 11	0.43	-33805	9554.04	14988	74327.92	7.78	Si
SLV 10	-1.67	-58906	-31990.06	26117	116071.87	3.628	Si
SLV 10	0.43	-55610	-1072.44	24655	111243.17	103.729	Si
SLV 9	-1.67	-58906	-31990.06	26117	116071.87	3.628	Si
SLV 9	0.43	-55610	-1072.44	24655	111243.17	103.729	Si
SLV 3	-1.67	-42794	24902.36	18973	90592.69	3.638	Si
SLV 3	0.43	-29117	8116.41	12909	65260.93	8.041	Si
SLV 14	-1.67	-55265	-63389.13	24503	110727.27	1.747	Si
SLV 14	0.43	-54612	1418.26	24213	109742.75	77.379	Si

Verifica a taglio nel piano secondo D.M. 17-01-18 (N.T.C.) §7.8.2.2.2 con rottura per scorrimento in combinazioni non sismiche, γM = 3

Comb.	Quota	N	V par	M	σ0	σN	I'	fvd	Vt scorr.	Vt fess.diag.	Vt,lim	c.s.	Verifica
SLU 82	-1.67	-73215	-20375	-28374.25		32461	5.0122	9884	22293			1.09	Si
SLU 82	0.43	-64699	-20487	8183.19		28685	5.0122	9380	21157			1.03	Si
SLU 77	-1.67	-71943	-20105	-28353.21		31897	5.0122	9808	22123			1.1	Si
SLU 77	0.43	-63202	-20219	8203.44		28021	5.0122	9292	20957			1.04	Si
SLU 84	-1.67	-73889	-20625	-28712.93		32760	5.0122	9924	22382			1.09	Si
SLU 84	0.43	-65375	-20739	8368.69		28985	5.0122	9420	21247			1.02	Si
SLU 74	-1.67	-71268	-19855	-28014.53		31598	5.0122	9769	22033			1.11	Si
SLU 74	0.43	-62526	-19967	8017.94		27722	5.0122	9252	20867			1.05	Si
SLU 75	-1.67	-71011	-19643	-27974.33		31484	5.0122	9753	21999			1.12	Si
SLU 75	0.43	-62247	-19752	7664.8		27598	5.0122	9235	20830			1.05	Si
SLU 80	-1.67	-71365	-19669	-27969.31		31640	5.0122	9774	22046			1.12	Si
SLU 80	0.43	-62577	-19779	7784.21		27744	5.0122	9255	20874			1.06	Si
SLU 83	-1.67	-74146	-20837	-28753.12		32874	5.0122	9939	22417			1.08	Si
SLU 83	0.43	-65654	-20954	8721.84		29108	5.0122	9437	21284			1.02	Si
SLU 79	-1.67	-71622	-19881	-28009.5		31754	5.0122	9789	22080			1.11	Si
SLU 79	0.43	-62856	-19994	8137.36		27868	5.0122	9271	20911			1.05	Si
SLU 81	-1.67	-73472	-20586	-28414.45		32575	5.0122	9899	22327			1.08	Si
SLU 81	0.43	-64978	-20702	8536.34		28809	5.0122	9397	21194			1.02	Si
SLU 78	-1.67	-71686	-19894	-28313.01		31783	5.0122	9793	22089			1.11	Si
SLU 78	0.43	-62923	-20004	7850.3		27898	5.0122	9275	20920			1.05	Si

Verifica a taglio nel piano secondo D.M. 17-01-18 (N.T.C.) §7.8.2.2.2 con rottura per scorrimento in combinazioni sismiche, γM = 2

Comb.	Quota	N	V par	M	σ0	σN	I'	fvd	Vt scorr.	Vt fess.diag.	Vt,lim	c.s.	Verifica
SLV 4	-1.67	-42794	14203	24902.36		18973	5.0122	12128	27355			1.93	Si
SLV 4	0.43	-29117	15206	8116.41		12909	5.0122	10915	24619			1.62	Si
SLV 11	-1.67	-41311	-21619	-33082.47		18315	5.0122	11996	27058			1.25	Si
SLV 11	0.43	-33805	-18377	9554.04		14988	5.0122	11331	25557			1.39	Si
SLV 10	-1.67	-58906	-20750	-31990.06		26117	5.0122	13557	30577			1.47	Si
SLV 10	0.43	-55610	-24192	-1072.44		24655	5.0122	13264	29918			1.24	Si
SLV 14	-1.67	-55265	-40179	-63389.13		30121	4.0773	14357	26343			0.66	No, Vu<V
SLV 14	0.43	-54612	-41335	1418.26		24213	5.0122	13176	29718			0.72	No, Vu<V
SLV 9	-1.67	-58906	-20750	-31990.06		26117	5.0122	13557	30577			1.47	Si
SLV 9	0.43	-55610	-24192	-1072.44		24655	5.0122	13264	29918			1.24	Si
SLV 13	-1.67	-55265	-40179	-63389.13		30121	4.0773	14357	26343			0.66	No, Vu<V
SLV 13	0.43	-54612	-41335	1418.26		24213	5.0122	13176	29718			0.72	No, Vu<V
SLV 3	-1.67	-42794	14203	24902.36		18973	5.0122	12128	27355			1.93	Si
SLV 3	0.43	-29117	15206	8116.41		12909	5.0122	10915	24619			1.62	Si
SLV 16	-1.67	-49987	-40440	-63716.86		30068	3.6943	14347	23851			0.59	No, Vu<V
SLV 16	0.43	-48071	-39591	4606.2		21313	5.0122	12596	28410			0.72	No, Vu<V
SLV 15	-1.67	-49987	-40440	-63716.86		30068	3.6943	14347	23851			0.59	No, Vu<V
SLV 15	0.43	-48071	-39591	4606.2		21313	5.0122	12596	28410			0.72	No, Vu<V
SLV 12	-1.67	-41311	-21619	-33082.47		18315	5.0122	11996	27058			1.25	Si
SLV 12	0.43	-33805	-18377	9554.04		14988	5.0122	11331	25557			1.39	Si

Verifica a pressoflessione fuori piano D.M. 17-01-18 (N.T.C.)

quota -0.175 Wa 0.08 denominatore 8 γM = 2

Comb.	fd	Sa	σ0	N	M	Mc	Coeff.s.	Verifica
SLV 7	143750	0.24	14133	-31877	369.49	6342.79	17.17	Si
SLV 8	143750	0.24	14133	-31877	369.49	6342.79	17.17	Si

Comb.	fd	Sa	σ0	N	M	Mc	Coeff.s.	Verifica
SLV 3	143750	0.24	14629	-32996	369.49	6535.21	17.69	Si
SLV 4	143750	0.24	14629	-32996	369.49	6535.21	17.69	Si
SLV 12	143750	0.24	16372	-36927	369.49	7195.34	19.47	Si
SLV 11	143750	0.24	16372	-36927	369.49	7195.34	19.47	Si
SLV 1	143750	0.24	17293	-39004	369.49	7533.94	20.39	Si
SLV 2	143750	0.24	17293	-39004	369.49	7533.94	20.39	Si
SLV 15	143750	0.24	22092	-49829	369.49	9184.36	24.86	Si
SLV 16	143750	0.24	22092	-49829	369.49	9184.36	24.86	Si

Verifica dei meccanismi locali di collasso con analisi cinematica lineare

forza di aggancio al piano = 0 quota mezzeria = -0.175 Wa = 0.08 Ta = 0.0332

Comb.	N top	N base	V orto	α0	M*	e*	a0*	aLim	Verifica
SLV 16	-29020	-49987	961	0.061	3915.5	0.933	0.94787	3.6078	No
SLV 15	-29020	-49987	961	0.061	3915.5	0.933	0.94787	3.6078	No
SLV 13	-39364	-55265	1062	0.062	4962.8	0.945	0.95207	3.6078	No
SLV 14	-39364	-55265	1062	0.062	4962.8	0.945	0.95207	3.6078	No
SLV 10	-47655	-58906	1036	0.064	5804.4	0.952	0.98402	3.42705	No
SLV 9	-47655	-58906	1036	0.064	5804.4	0.952	0.98402	3.42705	No
SLV 11	-13176	-41311	700	0.063	2329.1	0.903	1.00816	3.42705	No
SLV 12	-13176	-41311	700	0.063	2329.1	0.903	1.00816	3.42705	No
SLV 5	-44418	-56749	912	0.066	5475.7	0.95	1.01346	3.42705	No
SLV 6	-44418	-56749	912	0.066	5475.7	0.95	1.01346	3.42705	No

Tabella dei coefficienti di sicurezza minimi

Stato limite	Coeff.s.	Comb.	Verifica
PF_SLU	3.855	SLU 83	Si
V_SLU	1.016	SLU 83	Si
PF_SLV	1.609	SLV 15	Si
V_SLV	0.59	SLV 15	No
PFFP_SLV	17.167	SLV 7	Si
R_SLV	0.263	SLV 15	No

Maschio 25

Verifiche condotte secondo D.M. 17-01-18 (N.T.C.)

Dati geometrici

X ini.	Y ini.	X fin.	Y fin.	Quota i.	Quota.s	l	Sp.	h netta	h ini.	h fin.	a	a.s.,sx	a.s.,dx
-14.758	3.3	-15.058	3.3	L1	L3	0.3	0.3	2.99	2.99	2.99			

Caratteristiche del materiale

(Circolare 7 21-01-19 C8.5.I) Muratura in mattoni pieni e malta di calce LC2_Corti

fb	fk	fvk0	fmedio	τ0	fv0	μ	ϕ	fv,lim	E	G	FC
600000			345000	9000	20000	0.58	0.77	32500	320000000	128000000	1.2

Verifica a pressoflessione nel piano secondo D.M. 17-01-18 NTC §7.8.2.2.1 in combinazioni non sismiche, γM = 3

Comb.	Quota	N	M	σ0	Mu	c.s.	Verifica
SLU 77	-1.67	-2564	315.7	28494	250.11	0.792	No, M>Mu
SLU 77	0.49	-6917	195.68	76860	58.58	0.299	No, M>Mu
SLU 78	-1.67	-2563	315.5	28477	250.04	0.793	No, M>Mu
SLU 78	0.49	-6913	195.54	76806	59.22	0.303	No, M>Mu
SLU 74	-1.67	-2533	311.79	28139	248.65	0.798	No, M>Mu
SLU 74	0.49	-6824	192.91	75818	70.87	0.367	No, M>Mu
SLU 79	-1.67	-2546	313.11	28292	249.29	0.796	No, M>Mu
SLU 79	0.49	-6859	194.03	76216	66.21	0.341	No, M>Mu
SLU 83	-1.67	-2596	325.49	28843	251.51	0.773	No, M>Mu
SLU 83	0.49	-7092	200.35	78797	34.75	0.173	No, M>Mu
SLU 81	-1.67	-2564	321.58	28488	250.09	0.778	No, M>Mu
SLU 81	0.49	-6998	197.58	77756	47.71	0.241	No, M>Mu
SLU 84	-1.67	-2594	325.29	28826	251.44	0.773	No, M>Mu
SLU 84	0.49	-7087	200.21	78743	35.43	0.177	No, M>Mu
SLU 80	-1.67	-2545	312.91	28276	249.22	0.796	No, M>Mu
SLU 80	0.49	-6855	193.88	76163	66.84	0.345	No, M>Mu
SLU 75	-1.67	-2531	311.59	28123	248.59	0.798	No, M>Mu
SLU 75	0.49	-6819	192.77	75765	71.49	0.371	No, M>Mu
SLU 82	-1.67	-2562	321.38	28472	250.02	0.778	No, M>Mu
SLU 82	0.49	-6993	197.44	77702	48.37	0.245	No, M>Mu

Verifica a pressoflessione nel piano secondo D.M. 17-01-18 NTC §7.8.2.2.1 in combinazioni sismiche, γM = 2

Comb.	Quota	N	M	σ0	Mu	c.s.	Verifica
SLV 5	-1.67	-3234	256.22	35938	342.47	1.337	Si
SLV 5	0.49	-5898	145.47	65529	410.21	2.82	Si
SLV 7	-1.67	-45	269.1	0	0	0	No, e>l/2
SLV 7	0.49	-4353	134.88	48362	394.47	2.925	Si
SLV 8	-1.67	-45	269.1	0	0	0	No, e>l/2
SLV 8	0.49	-4353	134.88	48362	394.47	2.925	Si
SLV 12	-1.67	-317	161.59	0	0	0	No, e>l/2
SLV 12	0.49	-3318	115.15	36870	347.55	3.018	Si
SLV 2	-1.67	-1801	386.15	0	0	0	No, e>l/2
SLV 2	0.49	-6564	164.77	72928	396.91	2.409	Si
SLV 11	-1.67	-317	161.59	0	0	0	No, e>l/2
SLV 11	0.49	-3318	115.15	36870	347.55	3.018	Si
SLV 4	-1.67	-844	390.01	0	0	0	No, e>l/2
SLV 4	0.49	-6100	161.59	67778	407.45	2.521	Si
SLV 3	-1.67	-844	390.01	0	0	0	No, e>l/2
SLV 3	0.49	-6100	161.59	67778	407.45	2.521	Si

Comb.	Quota	N	M	σ0	Mu	c.s.	Verifica
SLV 1	-1.67	-1801	386.15	0	0	0	No, e>l/2
SLV 1	0.49	-6564	164.77	72928	396.91	2.409	Si
SLV 6	-1.67	-3234	256.22	35938	342.47	1.337	Si
SLV 6	0.49	-5898	145.47	65529	410.21	2.82	Si

Verifica a taglio nel piano secondo D.M. 17-01-18 (N.T.C.) §7.8.2.2.2 con rottura per scorrimento in combinazioni non sismiche, γM = 3

Comb.	Quota	N	V par	M	σ0	σN	l'	fvd	Vt scorr.	Vt fess.diag.	Vt,lim	c.s.	Verifica
SLU 82	-1.67	-2562	819	321.38		115813	0.0738	10833	240			0.29	No, Vu<V
SLU 82	0.49	-6993	1937	197.44		77702	0.3	10833	975			0.5	No, Vu<V
SLU 40	-1.67	-2128	705	276.7		118237	0.06	10833	195			0.28	No, Vu<V
SLU 40	0.49	-5981	1663	168.77		66460	0.3	10833	975			0.59	No, Vu<V
SLU 36	-1.67	-2129	690	270.82		103793	0.0684	10833	222			0.32	No, Vu<V
SLU 36	0.49	-5901	1636	166.87		65564	0.3	10833	975			0.6	No, Vu<V
SLU 84	-1.67	-2594	829	325.29		117096	0.0739	10833	240			0.29	No, Vu<V
SLU 84	0.49	-7087	1963	200.21		78743	0.3	10833	975			0.5	No, Vu<V
SLU 41	-1.67	-2162	715	280.81		119480	0.0603	10833	196			0.27	No, Vu<V
SLU 41	0.49	-6080	1690	171.69		67555	0.3	10833	975			0.58	No, Vu<V
SLU 35	-1.67	-2130	691	271.03		103898	0.0684	10833	222			0.32	No, Vu<V
SLU 35	0.49	-5906	1638	167.02		65618	0.3	10833	975			0.6	No, Vu<V
SLU 39	-1.67	-2130	705	276.9		118350	0.06	10833	195			0.28	No, Vu<V
SLU 39	0.49	-5986	1664	168.92		66514	0.3	10833	975			0.59	No, Vu<V
SLU 42	-1.67	-2160	715	280.61		119368	0.0603	10833	196			0.27	No, Vu<V
SLU 42	0.49	-6075	1688	171.54		67501	0.3	10833	975			0.58	No, Vu<V
SLU 83	-1.67	-2596	830	325.49		117195	0.0738	10833	240			0.29	No, Vu<V
SLU 83	0.49	-7092	1965	200.35		78797	0.3	10833	975			0.5	No, Vu<V
SLU 81	-1.67	-2564	819	321.58		115912	0.0737	10833	240			0.29	No, Vu<V
SLU 81	0.49	-6998	1939	197.58		77756	0.3	10833	975			0.5	No, Vu<V

Verifica a taglio nel piano secondo D.M. 17-01-18 (N.T.C.) §7.8.2.2.2 con rottura per scorrimento in combinazioni sismiche, γM = 2

Comb.	Quota	N	V par	M	σ0	σN	l'	fvd	Vt scorr.	Vt fess.diag.	Vt,lim	c.s.	Verifica
SLV 8	-1.67	-45	691	269.1		0	0	8333	0			0	No, Vu<V
SLV 8	0.49	-4353	1384	134.88		48362	0.3	16250	1462			1.06	Si
SLV 3	-1.67	-844	924	390.01		0	0	8333	0			0	No, Vu<V
SLV 3	0.49	-6100	1738	161.59		67778	0.3	16250	1462			0.84	No, Vu<V
SLV 1	-1.67	-1801	897	386.15		0	0	8333	0			0	No, Vu<V
SLV 1	0.49	-6564	1755	164.77		72928	0.3	16250	1462			0.83	No, Vu<V
SLV 6	-1.67	-3234	601	256.22		50771	0.2124	16250	1035			1.72	Si
SLV 6	0.49	-5898	1440	145.47		65529	0.3	16250	1462			1.02	Si
SLV 7	-1.67	-45	691	269.1		0	0	8333	0			0	No, Vu<V
SLV 7	0.49	-4353	1384	134.88		48362	0.3	16250	1462			1.06	Si
SLV 4	-1.67	-844	924	390.01		0	0	8333	0			0	No, Vu<V
SLV 4	0.49	-6100	1738	161.59		67778	0.3	16250	1462			0.84	No, Vu<V
SLV 2	-1.67	-1801	897	386.15		0	0	8333	0			0	No, Vu<V
SLV 2	0.49	-6564	1755	164.77		72928	0.3	16250	1462			0.83	No, Vu<V
SLV 11	-1.67	-317	464	161.59		0	0	8333	0			0	No, Vu<V
SLV 11	0.49	-3318	1097	115.15		36870	0.3	15707	1414			1.29	Si
SLV 12	-1.67	-317	464	161.59		0	0	8333	0			0	No, Vu<V
SLV 12	0.49	-3318	1097	115.15		36870	0.3	15707	1414			1.29	Si
SLV 5	-1.67	-3234	601	256.22		50771	0.2124	16250	1035			1.72	Si
SLV 5	0.49	-5898	1440	145.47		65529	0.3	16250	1462			1.02	Si

Verifica a pressoflessione fuori piano D.M. 17-01-18 (N.T.C.)

quota -0.175 Wa 0.05 denominatore 8 γM = 2

Comb.	fd	Sa	σ0	N	M	Mc	Coeff.s.	Verifica
SLV 16	143750	0.24	29987	-2699	14.74	305.47	20.72	Si
SLV 15	143750	0.24	29987	-2699	14.74	305.47	20.72	Si
SLV 12	143750	0.24	33729	-3036	14.74	329.65	22.36	Si
SLV 11	143750	0.24	33729	-3036	14.74	329.65	22.36	Si
SLV 13	143750	0.24	38679	-3481	14.74	356.87	24.21	Si
SLV 14	143750	0.24	38679	-3481	14.74	356.87	24.21	Si
SLV 1	143750	0.24	78343	-7051	14.74	379.51	25.74	Si
SLV 2	143750	0.24	78343	-7051	14.74	379.51	25.74	Si
SLV 7	143750	0.24	45629	-4107	14.74	385.96	26.18	Si
SLV 8	143750	0.24	45629	-4107	14.74	385.96	26.18	Si

Verifica dei meccanismi locali di collasso con analisi cinematica lineare

forza di aggancio al piano = 0 quota mezzeria = -0.175 Wa = 0.05 Ta = 0.0498

Comb.	N top	N base	V orto	α0	M*	e*	a0*	aLim	Verifica
SLV 2	-6481	-1801	-4	0.051	697.9	0.983	0.7596	4.54426	No
SLV 1	-6481	-1801	-4	0.051	697.9	0.983	0.7596	4.54426	No
SLV 3	-6082	-844	-2	0.052	657.2	0.982	0.76735	4.54426	No
SLV 4	-6082	-844	-2	0.052	657.2	0.982	0.76735	4.54426	No
SLV 14	-3487	-2707	-2	0.053	392.9	0.971	0.79022	4.54426	No
SLV 13	-3487	-2707	-2	0.053	392.9	0.971	0.79022	4.54426	No
SLV 15	-3087	-1750	0	0.054	352.2	0.967	0.80828	4.54426	No
SLV 16	-3087	-1750	0	0.054	352.2	0.967	0.80828	4.54426	No
SLV 6	-5899	-3234	-6	0.051	638.6	0.981	0.7568	4.18901	No
SLV 5	-5899	-3234	-6	0.051	638.6	0.981	0.7568	4.18901	No

Tabella dei coefficienti di sicurezza minimi

Stato limite	Coeff.s.	Comb.	Verifica
PF_SLU	0.173	SLU 83	No
V_SLU	0.274	SLU 41	No
PF_SLV	0	SLV 1	No
V_SLV	0	SLV 1	No
PFFP_SLV	20.719	SLV 15	Si
R_SLV	0.167	SLV 1	No

Maschio 26

Verifiche condotte secondo D.M. 17-01-18 (N.T.C.)

Dati geometrici

X ini.	Y ini.	X fin.	Y fin.	Quota i.	Quota.s	l	Sp.	h netta	h ini.	h fin.	a	a.s.,sx	a.s.,dx
-9.728	3.3	-13.758	3.3	L1	L3	4.03	0.3	2.99	2.99	2.99			

Caratteristiche del materiale

(Circolare 7 21-01-19 C8.5.I) Muratura in mattoni pieni e malta di calce LC2_Corti

fb	fk	fvk0	fmedio	τ0	fv0	μ	ϕ	fv,lim	E	G	FC
600000			345000	9000	20000	0.58	0.77	32500	320000000	128000000	1.2

Verifica a pressoflessione nel piano secondo D.M. 17-01-18 NTC §7.8.2.2.1 in combinazioni non sismiche, γM = 3

Comb.	Quota	N	M	σ0	Mu	c.s.	Verifica
SLU 83	-1.67	-78568	14879.47	64986	32014.16	2.152	Si
SLU 83	0.49	-62263	9476.87	51500	46141.54	4.869	Si
SLU 78	-1.67	-76388	14288.09	63183	34533.3	2.417	Si
SLU 78	0.49	-60224	9256.01	49813	47143.06	5.093	Si
SLU 80	-1.67	-75824	14171.94	62716	35153.26	2.48	Si
SLU 80	0.49	-59750	9169.69	49421	47351.62	5.164	Si
SLU 82	-1.67	-77622	14759.65	64204	33130.62	2.245	Si
SLU 82	0.49	-61505	9351.88	50873	46533.83	4.976	Si
SLU 77	-1.67	-76427	14296.58	63215	34489.36	2.412	Si
SLU 77	0.49	-60255	9264.28	49839	47129.16	5.087	Si
SLU 84	-1.67	-78528	14870.98	64953	32061.56	2.156	Si
SLU 84	0.49	-62232	9468.6	51474	46157.97	4.875	Si
SLU 74	-1.67	-75521	14185.25	62466	35480.52	2.501	Si
SLU 74	0.49	-59527	9147.56	49237	47446.16	5.187	Si
SLU 75	-1.67	-75482	14176.76	62433	35522.99	2.506	Si
SLU 75	0.49	-59497	9139.29	49211	47459.14	5.193	Si
SLU 79	-1.67	-75863	14180.42	62749	35110.23	2.476	Si
SLU 79	0.49	-59781	9177.96	49446	47338.32	5.158	Si
SLU 81	-1.67	-77662	14768.14	64237	33084.68	2.24	Si
SLU 81	0.49	-61536	9360.15	50898	46518.31	4.97	Si

Verifica a pressoflessione nel piano secondo D.M. 17-01-18 NTC §7.8.2.2.1 in combinazioni sismiche, γM = 2

Comb.	Quota	N	M	σ0	Mu	c.s.	Verifica
SLV 5	-1.67	-58187	14736.58	48128	71064.78	4.822	Si
SLV 5	0.49	-42268	8657.53	34961	60800.6	7.023	Si
SLV 1	-1.67	-53061	27842.05	43889	68514.51	2.461	Si
SLV 1	0.49	-34930	12469.8	28892	53741.86	4.31	Si
SLV 8	-1.67	-44078	15265.51	36458	62316.21	4.082	Si
SLV 8	0.49	-33600	7403.7	27791	52304.37	7.065	Si
SLV 15	-1.67	-49365	-8914.54	40831	66230.45	7.429	Si
SLV 15	0.49	-44626	-52.38	36912	62757.26	1000	Si
SLV 7	-1.67	-44078	15265.51	36458	62316.21	4.082	Si
SLV 7	0.49	-33600	7403.7	27791	52304.37	7.065	Si
SLV 4	-1.67	-48829	28000.73	40388	65868.28	2.352	Si
SLV 4	0.49	-32330	12093.65	26741	50887.68	4.208	Si
SLV 3	-1.67	-48829	28000.73	40388	65868.28	2.352	Si
SLV 3	0.49	-32330	12093.65	26741	50887.68	4.208	Si
SLV 2	-1.67	-53061	27842.05	43889	68514.51	2.461	Si
SLV 2	0.49	-34930	12469.8	28892	53741.86	4.31	Si
SLV 6	-1.67	-58187	14736.58	48128	71064.78	4.822	Si
SLV 6	0.49	-42268	8657.53	34961	60800.6	7.023	Si
SLV 16	-1.67	-49365	-8914.54	40831	66230.45	7.429	Si
SLV 16	0.49	-44626	-52.38	36912	62757.26	1000	Si

Verifica a taglio nel piano secondo D.M. 17-01-18 (N.T.C.) §7.8.2.2.2 con rottura per scorrimento in combinazioni non sismiche, γM = 3

Comb.	Quota	N	V par	M	σ0	σN	l'	fvd	Vt scorr.	Vt fess.diag.	Vt,lim	c.s.	Verifica
SLU 84	-1.67	-78528	-902	14870.98		64953	4.03	10833	13097			14.53	Si
SLU 84	0.49	-62232	-942	9468.6		51474	4.03	10833	13097			13.9	Si
SLU 82	-1.67	-77622	-891	14759.65		64204	4.03	10833	13097			14.7	Si
SLU 82	0.49	-61505	-938	9351.88		50873	4.03	10833	13097			13.97	Si
SLU 74	-1.67	-75521	-865	14185.25		62466	4.03	10833	13097			15.14	Si
SLU 74	0.49	-59527	-883	9147.56		49237	4.03	10833	13097			14.83	Si
SLU 80	-1.67	-75824	-868	14171.94		62716	4.03	10833	13097			15.09	Si
SLU 80	0.49	-59750	-880	9169.69		49421	4.03	10833	13097			14.89	Si
SLU 75	-1.67	-75482	-864	14176.76		62433	4.03	10833	13097			15.15	Si
SLU 75	0.49	-59497	-883	9139.29		49211	4.03	10833	13097			14.84	Si
SLU 79	-1.67	-75863	-869	14180.42		62749	4.03	10833	13097			15.08	Si
SLU 79	0.49	-59781	-880	9177.96		49446	4.03	10833	13097			14.88	Si
SLU 81	-1.67	-77662	-891	14768.14		64237	4.03	10833	13097			14.69	Si
SLU 81	0.49	-61536	-938	9360.15		50898	4.03	10833	13097			13.97	Si
SLU 77	-1.67	-76427	-876	14296.58		63215	4.03	10833	13097			14.95	Si
SLU 77	0.49	-60255	-888	9264.28		49839	4.03	10833	13097			14.75	Si
SLU 78	-1.67	-76388	-875	14288.09		63183	4.03	10833	13097			14.96	Si
SLU 78	0.49	-60224	-887	9256.01		49813	4.03	10833	13097			14.76	Si
SLU 83	-1.67	-78568	-902	14879.47		64986	4.03	10833	13097			14.52	Si
SLU 83	0.49	-62263	-942	9476.87		51500	4.03	10833	13097			13.9	Si

Verifica a taglio nel piano secondo D.M. 17-01-18 (N.T.C.) §7.8.2.2.2 con rottura per scorrimento in combinazioni sismiche, γM = 2

Comb.	Quota	N	V par	M	σ0	σN	l'	fvd	Vt scorr.	Vt fess.diag.	Vt,lim	c.s.	Verifica
SLV 4	-1.67	-48829	11851	28000.73		40388	4.03	16250	19646			1.66	Si
SLV 4	0.49	-32330	9351	12093.65		26741	4.03	13682	16541			1.77	Si
SLV 15	-1.67	-49365	-13345	-8914.54		40831	4.03	16250	19646			1.47	Si
SLV 15	0.49	-44626	-11073	-52.38		36912	4.03	15716	19000			1.72	Si
SLV 11	-1.67	-44239	-4915	4190.93		36592	4.03	15652	18923			3.85	Si

Comb.	Quota	N	V par	M	σ0	σN	l'	fvd	Vt scorr.	Vt fess.diag.	Vt,lim	c.s.	Verifica
SLV 11	0.49	-37289	-4611	3759.89		30842	4.03	14502	17533			3.8	Si
SLV 12	-1.67	-44239	-4915	4190.93		36592	4.03	15652	18923			3.85	Si
SLV 12	0.49	-37289	-4611	3759.89		30842	4.03	14502	17533			3.8	Si
SLV 14	-1.67	-53598	-13012	-9073.23		44332	4.03	16250	19646			1.51	Si
SLV 14	0.49	-47227	-10485	323.77		39063	4.03	16146	19520			1.86	Si
SLV 1	-1.67	-53061	12184	27842.05		43889	4.03	16250	19646			1.61	Si
SLV 1	0.49	-34930	9939	12469.8		28892	4.03	14112	17061			1.72	Si
SLV 16	-1.67	-49365	-13345	-8914.54		40831	4.03	16250	19646			1.47	Si
SLV 16	0.49	-44626	-11073	-52.38		36912	4.03	15716	19000			1.72	Si
SLV 2	-1.67	-53061	12184	27842.05		43889	4.03	16250	19646			1.61	Si
SLV 2	0.49	-34930	9939	12469.8		28892	4.03	14112	17061			1.72	Si
SLV 3	-1.67	-48829	11851	28000.73		40388	4.03	16250	19646			1.66	Si
SLV 3	0.49	-32330	9351	12093.65		26741	4.03	13682	16541			1.77	Si
SLV 13	-1.67	-53598	-13012	-9073.23		44332	4.03	16250	19646			1.51	Si
SLV 13	0.49	-47227	-10485	323.77		39063	4.03	16146	19520			1.86	Si

Verifica a pressoflessione fuori piano D.M. 17-01-18 (N.T.C.)

quota -0.175 Wa 0.05 denominatore 8 γM = 2

Comb.	fd	Sa	σ0	N	M	Mc	Coeff.s.	Verifica
SLV 7	143750	0.24	32605	-39419	198.05	4335.08	21.89	Si
SLV 8	143750	0.24	32605	-39419	198.05	4335.08	21.89	Si
SLV 4	143750	0.24	33955	-41051	198.05	4446.53	22.45	Si
SLV 3	143750	0.24	33955	-41051	198.05	4446.53	22.45	Si
SLV 11	143750	0.24	34582	-41810	198.05	4496.51	22.7	Si
SLV 12	143750	0.24	34582	-41810	198.05	4496.51	22.7	Si
SLV 2	143750	0.24	37089	-44841	198.05	4684.46	23.65	Si
SLV 1	143750	0.24	37089	-44841	198.05	4684.46	23.65	Si
SLV 16	143750	0.24	40546	-49021	198.05	4913.06	24.81	Si
SLV 15	143750	0.24	40546	-49021	198.05	4913.06	24.81	Si

Verifica dei meccanismi locali di collasso con analisi cinematica lineare

forza di aggancio al piano = 0 quota mezzeria = -0.175 Wa = 0.05 Ta = 0.0498

Comb.	N top	N base	V orto	α0	M*	e*	a0*	aLim	Verifica
SLV 8	-31733	-44078	-416	0.043	3740.3	0.96	0.65057	4.18901	No
SLV 7	-31733	-44078	-416	0.043	3740.3	0.96	0.65057	4.18901	No
SLV 11	-36189	-44239	-388	0.044	4193.6	0.964	0.67055	4.18901	No
SLV 12	-36189	-44239	-388	0.044	4193.6	0.964	0.67055	4.18901	No
SLV 10	-43782	-58348	418	0.045	4966.4	0.969	0.67144	4.18901	No
SLV 9	-43782	-58348	418	0.045	4966.4	0.969	0.67144	4.18901	No
SLV 5	-39326	-58187	390	0.045	4512.8	0.966	0.67454	4.18901	No
SLV 6	-39326	-58187	390	0.045	4512.8	0.966	0.67454	4.18901	No
SLV 14	-46324	-53598	167	0.05	5225.2	0.97	0.75026	4.54426	No
SLV 13	-46324	-53598	167	0.05	5225.2	0.97	0.75026	4.54426	No

Tabella dei coefficienti di sicurezza minimi

Stato limite	Coeff.s.	Comb.	Verifica
PF_SLU	2.152	SLU 83	Si
V_SLU	13.897	SLU 83	Si
PF_SLV	2.352	SLV 3	Si
V_SLV	1.472	SLV 15	Si
PFFP_SLV	21.888	SLV 7	Si
R_SLV	0.155	SLV 7	No

Maschio 27

Verifiche condotte secondo D.M. 17-01-18 (N.T.C.)

Dati geometrici

X ini.	Y ini.	X fin.	Y fin.	Quota i.	Quota.s	l	Sp.	h netta	h ini.	h fin.	a	a.s.,sx	a.s.,dx
-19.693	6.565	-17.768	6.565	L1	L3	1.925	0.45	2.99	2.99	2.99			

Caratteristiche del materiale

(Circolare 7 21-01-19 C8.5.I) Muratura in mattoni pieni e malta di calce LC2_Corti

fb	fk	fvk0	fmedio	τ0	fv0	μ	ϕ	fv,lim	E	G	FC
600000			345000	9000	20000	0.58	0.77	32500	320000000	128000000	1.2

Verifica a pressoflessione nel piano secondo D.M. 17-01-18 NTC §7.8.2.2.1 in combinazioni non sismiche, γM = 3

Comb.	Quota	N	M	σ0	Mu	c.s.	Verifica
SLU 79	0.33	-37517	-4167	43309	16911.14	4.058	Si
SLU 79	0.73	-34097	-2155.63	39362	16960.15	7.868	Si
SLU 83	0.33	-38687	-4147.61	44660	16821.1	4.056	Si
SLU 83	0.73	-35228	-2078.55	40667	16979.25	8.169	Si
SLU 74	0.33	-37230	-4108.02	42978	16927.53	4.121	Si
SLU 74	0.73	-33838	-2112.56	39062	16950.85	8.024	Si
SLU 80	0.33	-37518	-4165.32	43311	16911.06	4.06	Si
SLU 80	0.73	-34100	-2155.55	39365	16960.23	7.868	Si
SLU 77	0.33	-37750	-4212.97	43579	16896.17	4.011	Si
SLU 77	0.73	-34311	-2185.69	39608	16966.43	7.763	Si
SLU 84	0.33	-38688	-4145.93	44662	16820.97	4.057	Si
SLU 84	0.73	-35230	-2078.47	40670	16979.25	8.169	Si
SLU 75	0.33	-37231	-4106.35	42980	16927.45	4.122	Si
SLU 75	0.73	-33840	-2112.48	39065	16950.95	8.024	Si
SLU 81	0.33	-38167	-4042.67	44060	16865.77	4.172	Si
SLU 81	0.73	-34755	-2005.43	40121	16975.51	8.465	Si
SLU 76	0.33	-36999	-4059.26	42711	16939.08	4.173	Si
SLU 76	0.73	-33628	-2082.37	38821	16942.01	8.136	Si

Comb.	Quota	N	M	σ0	Mu	c.s.	Verifica
SLU 78	0.33	-37752	-4211.29	43580	16896.07	4.012	Si
SLU 78	0.73	-34313	-2185.61	39611	16966.49	7.763	Si

Verifica a pressoflessione nel piano secondo D.M. 17-01-18 NTC §7.8.2.2.1 in combinazioni sismiche, γM = 2

Comb.	Quota	N	M	σ0	Mu	c.s.	Verifica
SLV 15	0.33	-29177	-2955.98	33682	20341.45	6.881	Si
SLV 15	0.73	-24475	-3599.71	28254	18109.83	5.031	Si
SLV 13	0.33	-20398	-1988.13	23548	15849.68	7.972	Si
SLV 13	0.73	-16418	-2824.18	18953	13351.23	4.727	Si
SLV 4	0.33	-30303	-3777.39	34982	20816.28	5.511	Si
SLV 4	0.73	-29462	-234.96	34011	20463.96	87.094	Si
SLV 7	0.33	-40150	-4619.05	46349	23985.47	5.193	Si
SLV 7	0.73	-37116	-2317.41	42847	23196.97	10.01	Si
SLV 8	0.33	-40150	-4619.05	46349	23985.47	5.193	Si
SLV 8	0.73	-37116	-2317.41	42847	23196.97	10.01	Si
SLV 14	0.33	-20398	-1988.13	23548	15849.68	7.972	Si
SLV 14	0.73	-16418	-2824.18	18953	13351.23	4.727	Si
SLV 3	0.33	-30303	-3777.39	34982	20816.28	5.511	Si
SLV 3	0.73	-29462	-234.96	34011	20463.96	87.094	Si
SLV 12	0.33	-39812	-4372.63	45959	23905.95	5.467	Si
SLV 12	0.73	-35620	-3326.83	41120	22746.5	6.837	Si
SLV 16	0.33	-29177	-2955.98	33682	20341.45	6.881	Si
SLV 16	0.73	-24475	-3599.71	28254	18109.83	5.031	Si
SLV 11	0.33	-39812	-4372.63	45959	23905.95	5.467	Si
SLV 11	0.73	-35620	-3326.83	41120	22746.5	6.837	Si

Verifica a taglio nel piano secondo D.M. 17-01-18 (N.T.C.) §7.8.2.2.2 con rottura per scorrimento in combinazioni non sismiche, γM = 3

Comb.	Quota	N	V par	M	σ0	σN	l'	fvd	Vt scorr.	Vt fess.diag.	Vt,lim	c.s.	Verifica
SLU 45	0.33	-29644	1193	-3614.25		34221	1.925	10118	8765			7.34	Si
SLU 45	0.73	-26674	1056	-2028.22		30792	1.925	9661	8369			7.92	Si
SLU 49	0.33	-30166	1232	-3717.52		34824	1.925	10199	8835			7.17	Si
SLU 49	0.73	-27149	1093	-2101.27		31341	1.925	9734	8432			7.72	Si
SLU 48	0.33	-30165	1231	-3719.2		34822	1.925	10198	8834			7.18	Si
SLU 48	0.73	-27147	1091	-2101.35		31338	1.925	9734	8432			7.73	Si
SLU 51	0.33	-29933	1223	-3671.54		34554	1.925	10163	8804			7.2	Si
SLU 51	0.73	-26936	1084	-2071.21		31095	1.925	9702	8404			7.75	Si
SLU 70	0.33	-33806	1267	-4011.65		39026	1.925	10759	9320			7.36	Si
SLU 70	0.73	-30571	1112	-2194.83		35292	1.925	10261	8889			7.99	Si
SLU 72	0.33	-33573	1258	-3965.68		38757	1.925	10723	9289			7.39	Si
SLU 72	0.73	-30358	1104	-2164.77		35045	1.925	10228	8860			8.02	Si
SLU 50	0.33	-29931	1221	-3673.22		34553	1.925	10163	8803			7.21	Si
SLU 50	0.73	-26933	1083	-2071.29		31092	1.925	9701	8404			7.76	Si
SLU 46	0.33	-29645	1195	-3612.57		34223	1.925	10119	8765			7.34	Si
SLU 46	0.73	-26676	1058	-2028.14		30795	1.925	9662	8369			7.91	Si
SLU 47	0.33	-29413	1186	-3565.48		33954	1.925	10083	8734			7.36	Si
SLU 47	0.73	-26465	1051	-1998.03		30551	1.925	9629	8341			7.94	Si
SLU 69	0.33	-33805	1266	-4013.33		39025	1.925	10759	9320			7.36	Si
SLU 69	0.73	-30569	1111	-2194.91		35289	1.925	10261	8888			8	Si

Verifica a taglio nel piano secondo D.M. 17-01-18 (N.T.C.) §7.8.2.2.2 con rottura per scorrimento in combinazioni sismiche, γM = 2

Comb.	Quota	N	V par	M	σ0	σN	l'	fvd	Vt scorr.	Vt fess.diag.	Vt,lim	c.s.	Verifica
SLV 3	0.33	-30303	-6138	-3777.39		34982	1.925	15330	13279			2.16	Si
SLV 3	0.73	-29462	-6587	-234.96		34011	1.925	15136	13111			1.99	Si
SLV 1	0.33	-21525	-8190	-2809.53		24848	1.925	13303	11524			1.41	Si
SLV 1	0.73	-21405	-8377	540.56		24710	1.925	13275	11500			1.37	Si
SLV 15	0.33	-29177	9980	-2955.98		33682	1.925	15070	13054			1.31	Si
SLV 15	0.73	-24475	9937	-3599.71		28254	1.925	13984	12114			1.22	Si
SLV 2	0.33	-21525	-8190	-2809.53		24848	1.925	13303	11524			1.41	Si
SLV 2	0.73	-21405	-8377	540.56		24710	1.925	13275	11500			1.37	Si
SLV 4	0.33	-30303	-6138	-3777.39		34982	1.925	15330	13279			2.16	Si
SLV 4	0.73	-29462	-6587	-234.96		34011	1.925	15136	13111			1.99	Si
SLV 16	0.33	-29177	9980	-2955.98		33682	1.925	15070	13054			1.31	Si
SLV 16	0.73	-24475	9937	-3599.71		28254	1.925	13984	12114			1.22	Si
SLV 13	0.33	-20398	7928	-1988.13		23548	1.925	13043	11298			1.43	Si
SLV 13	0.73	-16418	8148	-2824.18		18953	1.925	12124	10502			1.29	Si
SLV 14	0.33	-20398	7928	-1988.13		23548	1.925	13043	11298			1.43	Si
SLV 14	0.73	-16418	8148	-2824.18		18953	1.925	12124	10502			1.29	Si
SLV 5	0.33	-10889	-4943	-1392.88		12570	1.925	10847	9397			1.9	Si
SLV 5	0.73	-10260	-4682	267.69		11845	1.925	10702	9271			1.98	Si
SLV 6	0.33	-10889	-4943	-1392.88		12570	1.925	10847	9397			1.9	Si
SLV 6	0.73	-10260	-4682	267.69		11845	1.925	10702	9271			1.98	Si

Verifica a pressoflessione fuori piano D.M. 17-01-18 (N.T.C.)

quota -0.175 Wa 0.08 denominatore 8 γM = 2

Comb.	fd	Sa	σ0	N	M	Mc	Coeff.s.	Verifica
SLV 10	143750	0.24	11583	-10034	141.91	2043.55	14.4	Si
SLV 9	143750	0.24	11583	-10034	141.91	2043.55	14.4	Si
SLV 6	143750	0.24	12817	-11103	141.91	2236.1	15.76	Si
SLV 5	143750	0.24	12817	-11103	141.91	2236.1	15.76	Si
SLV 14	143750	0.24	22016	-19072	141.91	3517.91	24.79	Si
SLV 13	143750	0.24	22016	-19072	141.91	3517.91	24.79	Si
SLV 1	143750	0.24	26131	-22636	141.91	4003.88	28.22	Si
SLV 2	143750	0.24	26131	-22636	141.91	4003.88	28.22	Si
SLV 16	143750	0.24	32194	-27888	141.91	4621.48	32.57	Si
SLV 15	143750	0.24	32194	-27888	141.91	4621.48	32.57	Si

Verifica dei meccanismi locali di collasso con analisi cinematica lineare

forza di aggancio al piano = 0 quota mezzeria = -0.175 Wa = 0.08 Ta = 0.0332

Comb.	N top	N base	V orto	α0	M*	e*	a0*	aLim	Verifica

Comb.	N top	N base	V orto	α0	M*	e*	a0*	aLim	Verifica
SLV 6	-7430	-10102	-823	0.009	1129.9	0.917	0.14082	3.42705	No
SLV 5	-7430	-10102	-823	0.009	1129.9	0.917	0.14082	3.42705	No
SLV 10	-7099	-7908	-765	0.013	1096.8	0.915	0.20175	3.42705	No
SLV 9	-7099	-7908	-765	0.013	1096.8	0.915	0.20175	3.42705	No
SLV 2	-15642	-26334	-753	0.043	1959.1	0.947	0.6621	3.6078	No
SLV 1	-15642	-26334	-753	0.043	1959.1	0.947	0.6621	3.6078	No
SLV 14	-14539	-19020	-560	0.052	1847.3	0.944	0.80805	3.6078	No
SLV 13	-14539	-19020	-560	0.052	1847.3	0.944	0.80805	3.6078	No
SLV 3	-22350	-38054	-635	0.057	2640.6	0.959	0.8585	3.6078	No
SLV 4	-22350	-38054	-635	0.057	2640.6	0.959	0.8585	3.6078	No

Tabella dei coefficienti di sicurezza minimi

Stato limite	Coeff.s.	Comb.	Verifica
PF_SLU	4.011	SLU 77	Si
V_SLU	7.169	SLU 49	Si
PF_SLV	4.727	SLV 13	Si
V_SLV	1.219	SLV 15	Si
PFFP_SLV	14.401	SLV 9	Si
R_SLV	0.041	SLV 5	No

Maschio 28

Verifiche condotte secondo D.M. 17-01-18 (N.T.C.)

Dati geometrici

X ini.	Y ini.	X fin.	Y fin.	Quota i.	Quota.s	l	Sp.	h netta	h ini.	h fin.	a	a.s.,sx	a.s.,dx
-16.768	6.565	-12.888	6.565	L1	L3	3.88	0.45	2.99	2.99	2.99			

Caratteristiche del materiale

(Circolare 7 21-01-19 C8.5.I) Muratura in mattoni pieni e malta di calce LC2_Corti

fb	fk	fvk0	fmedio	τ0	fv0	μ	ϕ	fv,lim	E	G	FC
600000			345000	9000	20000	0.58	0.77	32500	320000000	128000000	1.2

Verifica a pressoflessione nel piano secondo D.M. 17-01-18 NTC §7.8.2.2.1 in combinazioni non sismiche, γM = 3

Comb.	Quota	N	M	σ0	Mu	c.s.	Verifica
SLU 78	0.33	-67806	-8640.93	38835	68830.58	7.966	Si
SLU 78	0.73	-66528	-7148.39	38103	68692.95	9.61	Si
SLU 81	0.33	-68677	-8824.36	39334	68898.77	7.808	Si
SLU 81	0.73	-67417	-7339.36	38612	68793.41	9.373	Si
SLU 83	0.33	-69547	-8939.53	39832	68946.26	7.713	Si
SLU 83	0.73	-68291	-7435.26	39113	68871.09	9.263	Si
SLU 77	0.33	-67800	-8641.71	38832	68830.03	7.965	Si
SLU 77	0.73	-66521	-7149.08	38099	68692.12	9.609	Si
SLU 74	0.33	-66931	-8526.54	38334	68741.12	8.062	Si
SLU 74	0.73	-65648	-7053.18	37599	68572.26	9.722	Si
SLU 79	0.33	-67366	-8589.75	38583	68788.22	8.008	Si
SLU 79	0.73	-66085	-7113.13	37849	68634.85	9.649	Si
SLU 82	0.33	-68683	-8823.57	39337	68899.17	7.809	Si
SLU 82	0.73	-67424	-7338.67	38616	68794.08	9.374	Si
SLU 84	0.33	-69553	-8938.75	39835	68946.52	7.713	Si
SLU 84	0.73	-68298	-7434.57	39117	68871.6	9.264	Si
SLU 80	0.33	-67372	-8588.97	38587	68788.84	8.009	Si
SLU 80	0.73	-66091	-7112.43	37853	68635.76	9.65	Si
SLU 75	0.33	-66937	-8525.76	38337	68741.8	8.063	Si
SLU 75	0.73	-65654	-7052.49	37603	68573.26	9.723	Si

Verifica a pressoflessione nel piano secondo D.M. 17-01-18 NTC §7.8.2.2.1 in combinazioni sismiche, γM = 2

Comb.	Quota	N	M	σ0	Mu	c.s.	Verifica
SLV 3	0.33	-58282	-16034.27	33380	82178.03	5.125	Si
SLV 3	0.73	-56915	-6794.5	32597	80958.04	11.915	Si
SLV 8	0.33	-72479	-11535.87	41512	92839.47	8.048	Si
SLV 8	0.73	-71488	-7272.15	40944	92213.92	12.68	Si
SLV 14	0.33	-32930	4643.98	18860	54023.75	11.633	Si
SLV 14	0.73	-32222	-2541.41	18455	53069.78	20.882	Si
SLV 2	0.33	-43070	-14228.35	24668	66687.35	4.687	Si
SLV 2	0.73	-41608	-5498.08	23830	64976.35	11.818	Si
SLV 6	0.33	-21775	-5516.13	12471	37931.13	6.876	Si
SLV 6	0.73	-20465	-2950.76	11721	35893.43	12.164	Si
SLV 13	0.33	-32930	4643.98	18860	54023.75	11.633	Si
SLV 13	0.73	-32222	-2541.41	18455	53069.78	20.882	Si
SLV 4	0.33	-58282	-16034.27	33380	82178.03	5.125	Si
SLV 4	0.73	-56915	-6794.5	32597	80958.04	11.915	Si
SLV 7	0.33	-72479	-11535.87	41512	92839.47	8.048	Si
SLV 7	0.73	-71488	-7272.15	40944	92213.92	12.68	Si
SLV 1	0.33	-43070	-14228.35	24668	66687.35	4.687	Si
SLV 1	0.73	-41608	-5498.08	23830	64976.35	11.818	Si
SLV 5	0.33	-21775	-5516.13	12471	37931.13	6.876	Si
SLV 5	0.73	-20465	-2950.76	11721	35893.43	12.164	Si

Verifica a taglio nel piano secondo D.M. 17-01-18 (N.T.C.) §7.8.2.2.2 con rottura per scorrimento in combinazioni non sismiche, γM = 3

Comb.	Quota	N	V par	M	σ0	σN	l'	fvd	Vt scorr.	Vt fess.diag.	Vt,lim	c.s.	Verifica
SLU 78	0.33	-67806	-4095	-8640.93		38835	3.88	10734	18741			4.58	Si
SLU 78	0.73	-66528	-3964	-7148.39		38103	3.88	10636	18570			4.69	Si
SLU 80	0.33	-67372	-4053	-8588.97		38587	3.88	10700	18683			4.61	Si
SLU 80	0.73	-66091	-3923	-7112.43		37853	3.88	10603	18512			4.72	Si
SLU 81	0.33	-68677	-4087	-8824.36		39334	3.88	10800	18857			4.61	Si

Comb.	Quota	N	V par	M	σ0	σN	l'	fvd	Vt scorr.	Vt fess.diag.	Vt,lim	c.s.	Verifica
SLU 81	0.73	-67417	-3955	-7339.36		38612	3.88	10704	18689			4.72	Si
SLU 77	0.33	-67800	-4095	-8641.71		38832	3.88	10733	18740			4.58	Si
SLU 77	0.73	-66521	-3963	-7149.08		38099	3.88	10635	18569			4.69	Si
SLU 84	0.33	-69553	-4139	-8938.75		39835	3.88	10833	18915			4.57	Si
SLU 84	0.73	-68298	-4005	-7434.57		39117	3.88	10771	18806			4.7	Si
SLU 75	0.33	-66937	-4044	-8525.76		38337	3.88	10667	18625			4.61	Si
SLU 75	0.73	-65654	-3914	-7052.49		37603	3.88	10569	18454			4.72	Si
SLU 83	0.33	-69547	-4139	-8939.53		39832	3.88	10833	18915			4.57	Si
SLU 83	0.73	-68291	-4005	-7435.26		39113	3.88	10771	18805			4.7	Si
SLU 74	0.33	-66931	-4043	-8526.54		38334	3.88	10667	18624			4.61	Si
SLU 74	0.73	-65648	-3914	-7053.18		37599	3.88	10569	18453			4.71	Si
SLU 79	0.33	-67366	-4053	-8589.75		38583	3.88	10700	18682			4.61	Si
SLU 79	0.73	-66085	-3923	-7113.13		37849	3.88	10602	18511			4.72	Si
SLU 82	0.33	-68683	-4088	-8823.57		39337	3.88	10801	18858			4.61	Si
SLU 82	0.73	-67424	-3956	-7338.67		38616	3.88	10704	18690			4.72	Si

Verifica a taglio nel piano secondo D.M. 17-01-18 (N.T.C.) §7.8.2.2.2 con rottura per scorrimento in combinazioni sismiche, γM = 2

Comb.	Quota	N	V par	M	σ0	σN	l'	fvd	Vt scorr.	Vt fess.diag.	Vt,lim	c.s.	Verifica
SLV 2	0.33	-43070	-21246	-14228.35		24668	3.88	13267	23164			1.09	Si
SLV 2	0.73	-41608	-22028	-5498.08		23830	3.88	13099	22872			1.04	Si
SLV 1	0.33	-43070	-21246	-14228.35		24668	3.88	13267	23164			1.09	Si
SLV 1	0.73	-41608	-22028	-5498.08		23830	3.88	13099	22872			1.04	Si
SLV 14	0.33	-32930	16353	4643.98		18860	3.88	12105	21136			1.29	Si
SLV 14	0.73	-32222	16768	-2541.41		18455	3.88	12024	20994			1.25	Si
SLV 6	0.33	-21775	-7242	-5516.13		12471	3.88	10828	18905			2.61	Si
SLV 6	0.73	-20465	-8239	-2950.76		11721	3.88	10678	18643			2.26	Si
SLV 15	0.33	-48142	15629	2838.05		27573	3.88	13848	24178			1.55	Si
SLV 15	0.73	-47529	16587	-3837.83		27222	3.88	13778	24056			1.45	Si
SLV 16	0.33	-48142	15629	2838.05		27573	3.88	13848	24178			1.55	Si
SLV 16	0.73	-47529	16587	-3837.83		27222	3.88	13778	24056			1.45	Si
SLV 4	0.33	-58282	-21970	-16034.27		33380	3.88	15009	26206			1.19	Si
SLV 4	0.73	-56915	-22208	-6794.5		32597	3.88	14853	25933			1.17	Si
SLV 3	0.33	-58282	-21970	-16034.27		33380	3.88	15009	26206			1.19	Si
SLV 3	0.73	-56915	-22208	-6794.5		32597	3.88	14853	25933			1.17	Si
SLV 13	0.33	-32930	16353	4643.98		18860	3.88	12105	21136			1.29	Si
SLV 13	0.73	-32222	16768	-2541.41		18455	3.88	12024	20994			1.25	Si
SLV 5	0.33	-21775	-7242	-5516.13		12471	3.88	10828	18905			2.61	Si
SLV 5	0.73	-20465	-8239	-2950.76		11721	3.88	10678	18643			2.26	Si

Verifica a pressoflessione fuori piano D.M. 17-01-18 (N.T.C.)

quota -0.175 Wa 0.08 denominatore 8 γM = 2

Comb.	fd	Sa	σ0	N	M	Mc	Coeff.s.	Verifica
SLV 9	143750	0.24	9426	-16457	286.02	3417.28	11.95	Si
SLV 10	143750	0.24	9426	-16457	286.02	3417.28	11.95	Si
SLV 6	143750	0.24	10810	-18875	286.02	3871.16	13.53	Si
SLV 5	143750	0.24	10810	-18875	286.02	3871.16	13.53	Si
SLV 13	143750	0.24	16862	-29441	286.02	5710.15	19.96	Si
SLV 14	143750	0.24	16862	-29441	286.02	5710.15	19.96	Si
SLV 2	143750	0.24	21478	-37500	286.02	6954.42	24.31	Si
SLV 1	143750	0.24	21478	-37500	286.02	6954.42	24.31	Si
SLV 15	143750	0.24	24621	-42988	286.02	7723.36	27	Si
SLV 16	143750	0.24	24621	-42988	286.02	7723.36	27	Si

Verifica dei meccanismi locali di collasso con analisi cinematica lineare

forza di aggancio al piano = 0 quota mezzeria = -0.175 Wa = 0.08 Ta = 0.0332

Comb.	N top	N base	V orto	α0	M*	e*	a0*	aLim	Verifica
SLV 9	-2213	-16754	-1932	0	1067.3	0.902	0	3.42705	No
SLV 6	-4635	-19050	-2074	0	1271.5	0.889	0	3.42705	No
SLV 5	-4635	-19050	-2074	0	1271.5	0.889	0	3.42705	No
SLV 10	-2213	-16754	-1932	0	1067.3	0.902	0	3.42705	No
SLV 1	-33786	-38672	-2105	0.03	4178	0.949	0.45544	3.6078	No
SLV 2	-33786	-38672	-2105	0.03	4178	0.949	0.45544	3.6078	No
SLV 13	-25713	-31019	-1631	0.033	3359.6	0.939	0.51491	3.6078	No
SLV 14	-25713	-31019	-1631	0.033	3359.6	0.939	0.51491	3.6078	No
SLV 3	-56350	-53195	-1989	0.048	6472.2	0.966	0.72927	3.6078	No
SLV 4	-56350	-53195	-1989	0.048	6472.2	0.966	0.72927	3.6078	No

Tabella dei coefficienti di sicurezza minimi

Stato limite	Coeff.s.	Comb.	Verifica
PF_SLU	7.713	SLU 83	Si
V_SLU	4.57	SLU 84	Si
PF_SLV	4.687	SLV 1	Si
V_SLV	1.038	SLV 1	Si
PFFP_SLV	11.948	SLV 9	Si
R_SLV	0	SLV 5	No

Maschio 29

Verifiche condotte secondo D.M. 17-01-18 (N.T.C.)

Dati geometrici

X ini.	Y ini.	X fin.	Y fin.	Quota i.	Quota.s	l	Sp.	h netta	h ini.	h fin.	a	a.s.,sx	a.s.,dx
-11.888	6.565	-7.963	6.565	L1	L3	3.925	0.45	2.99	2.99	2.99			

Caratteristiche del materiale

(Circolare 7 21-01-19 C8.5.I) Muratura in mattoni pieni e malta di calce LC2_Corti

fb	fk	fvk0	fmedio	τ0	fv0	μ	ϕ	fv,lim	E	G	FC
600000			345000	9000	20000	0.58	0.77	32500	320000000	128000000	1.2

Verifica a pressoflessione nel piano secondo D.M. 17-01-18 NTC §7.8.2.2.1 in combinazioni non sismiche, γM = 3

Comb.	Quota	N	M	σ0	Mu	c.s.	Verifica
SLU 77	0.33	-69857	7058.32	39552	70524.94	9.992	Si
SLU 77	0.73	-68167	6340	38595	70390.13	11.103	Si
SLU 75	0.33	-69106	6994.19	39127	70474.66	10.076	Si
SLU 75	0.73	-67414	6310.02	38169	70304.97	11.142	Si
SLU 84	0.33	-71778	7372.49	40640	70583.52	9.574	Si
SLU 84	0.73	-70100	6667.88	39690	70537.89	10.579	Si
SLU 81	0.33	-70985	7298.4	40191	70571.52	9.669	Si
SLU 81	0.73	-69304	6627.79	39239	70489.41	10.635	Si
SLU 74	0.33	-69085	6989.21	39115	70473	10.083	Si
SLU 74	0.73	-67392	6304.97	38157	70302.34	11.15	Si
SLU 82	0.33	-71006	7303.38	40203	70572.07	9.663	Si
SLU 82	0.73	-69325	6632.85	39251	70490.93	10.628	Si
SLU 83	0.33	-71757	7367.51	40628	70583.42	9.58	Si
SLU 83	0.73	-70078	6662.83	39678	70536.82	10.587	Si
SLU 79	0.33	-69381	7013.87	39283	70494.85	10.051	Si
SLU 79	0.73	-67692	6300.71	38326	70338.21	11.164	Si
SLU 78	0.33	-69878	7063.3	39565	70526.14	9.985	Si
SLU 78	0.73	-68188	6345.06	38607	70392.31	11.094	Si
SLU 80	0.33	-69402	7018.85	39295	70496.32	10.044	Si
SLU 80	0.73	-67713	6305.76	38338	70340.66	11.155	Si

Verifica a pressoflessione nel piano secondo D.M. 17-01-18 NTC §7.8.2.2.1 in combinazioni sismiche, γM = 2

Comb.	Quota	N	M	σ0	Mu	c.s.	Verifica
SLV 13	0.33	-44291	14321.98	25077	69079.55	4.823	Si
SLV 13	0.73	-42158	5726.82	23869	66569.94	11.624	Si
SLV 9	0.33	-22853	6322.8	12939	40097.93	6.342	Si
SLV 9	0.73	-20941	3460.05	11857	37108.22	10.725	Si
SLV 10	0.33	-22853	6322.8	12939	40097.93	6.342	Si
SLV 10	0.73	-20941	3460.05	11857	37108.22	10.725	Si
SLV 1	0.33	-34563	-5865.9	19569	56964.38	9.711	Si
SLV 1	0.73	-33827	1846.23	19153	55977.61	30.32	Si
SLV 11	0.33	-74377	8989.72	42112	95655.03	10.64	Si
SLV 11	0.73	-73229	6055.95	41462	94942.7	15.678	Si
SLV 2	0.33	-34563	-5865.9	19569	56964.38	9.711	Si
SLV 2	0.73	-33827	1846.23	19153	55977.61	30.32	Si
SLV 15	0.33	-59749	15122.06	33829	84789.5	5.607	Si
SLV 15	0.73	-57844	6505.59	32751	83088.46	12.772	Si
SLV 16	0.33	-59749	15122.06	33829	84789.5	5.607	Si
SLV 16	0.73	-57844	6505.59	32751	83088.46	12.772	Si
SLV 14	0.33	-44291	14321.98	25077	69079.55	4.823	Si
SLV 14	0.73	-42158	5726.82	23869	66569.94	11.624	Si
SLV 12	0.33	-74377	8989.72	42112	95655.03	10.64	Si
SLV 12	0.73	-73229	6055.95	41462	94942.7	15.678	Si

Verifica a taglio nel piano secondo D.M. 17-01-18 (N.T.C.) §7.8.2.2.2 con rottura per scorrimento in combinazioni non sismiche, γM = 3

Comb.	Quota	N	V par	M	σ0	σN	I'	fvd	Vt scorr.	Vt fess.diag.	Vt,lim	c.s.	Verifica
SLU 74	0.33	-69085	1745	6989.21		39115	3.9249	10771	19023			10.9	Si
SLU 74	0.73	-67392	1772	6304.97		38157	3.9249	10643	18798			10.61	Si
SLU 70	0.33	-62531	1669	6076.89		35405	3.9249	10276	18150			10.88	Si
SLU 70	0.73	-60812	1693	5418.35		34431	3.9249	10146	17920			10.59	Si
SLU 77	0.33	-69857	1831	7058.32		39552	3.9249	10829	19126			10.45	Si
SLU 77	0.73	-68167	1858	6340		38595	3.9249	10702	18901			10.17	Si
SLU 79	0.33	-69381	1819	7013.87		39283	3.9249	10793	19063			10.48	Si
SLU 79	0.73	-67692	1845	6300.71		38326	3.9249	10666	18838			10.21	Si
SLU 80	0.33	-69402	1819	7018.85		39295	3.9249	10795	19066			10.48	Si
SLU 80	0.73	-67713	1845	6305.76		38338	3.9249	10667	18841			10.21	Si
SLU 75	0.33	-69106	1745	6994.19		39127	3.9249	10773	19026			10.9	Si
SLU 75	0.73	-67414	1771	6310.02		38169	3.9249	10645	18801			10.61	Si
SLU 84	0.33	-71778	1802	7372.49		40640	3.9249	10833	19134			10.62	Si
SLU 84	0.73	-70100	1830	6667.88		39690	3.9249	10833	19134			10.46	Si
SLU 83	0.33	-71757	1802	7367.51		40628	3.9249	10833	19134			10.62	Si
SLU 83	0.73	-70078	1830	6662.83		39678	3.9249	10833	19134			10.46	Si
SLU 69	0.33	-62510	1669	6071.91		35393	3.9249	10275	18147			10.87	Si
SLU 69	0.73	-60791	1693	5413.29		34419	3.9249	10145	17918			10.58	Si
SLU 78	0.33	-69878	1831	7063.3		39565	3.9249	10831	19129			10.45	Si
SLU 78	0.73	-68188	1858	6345.06		38607	3.9249	10703	18904			10.18	Si

Verifica a taglio nel piano secondo D.M. 17-01-18 (N.T.C.) §7.8.2.2.2 con rottura per scorrimento in combinazioni sismiche, γM = 2

Comb.	Quota	N	V par	M	σ0	σN	I'	fvd	Vt scorr.	Vt fess.diag.	Vt,lim	c.s.	Verifica
SLV 9	0.33	-22853	7590	6322.8		12939	3.9249	10921	19289			2.54	Si
SLV 9	0.73	-20941	8593	3460.05		11857	3.9249	10705	18907			2.2	Si
SLV 14	0.33	-44291	20364	14321.98		25077	3.9249	13349	23576			1.16	Si
SLV 14	0.73	-42158	21351	5726.82		23869	3.9249	13107	23150			1.08	Si
SLV 10	0.33	-22853	7590	6322.8		12939	3.9249	10921	19289			2.54	Si
SLV 10	0.73	-20941	8593	3460.05		11857	3.9249	10705	18907			2.2	Si
SLV 13	0.33	-44291	20364	14321.98		25077	3.9249	13349	23576			1.16	Si
SLV 13	0.73	-42158	21351	5726.82		23869	3.9249	13107	23150			1.08	Si
SLV 15	0.33	-59749	19918	15122.06		33829	3.9249	15099	26668			1.34	Si
SLV 15	0.73	-57844	20447	6505.59		32751	3.9249	14883	26287			1.29	Si
SLV 16	0.33	-59749	19918	15122.06		33829	3.9249	15099	26668			1.34	Si
SLV 16	0.73	-57844	20447	6505.59		32751	3.9249	14883	26287			1.29	Si
SLV 3	0.33	-50020	-18066	-5065.82		28321	3.9249	13998	24722			1.37	Si
SLV 3	0.73	-49513	-19017	2625.01		28034	3.9249	13940	24621			1.29	Si
SLV 2	0.33	-34563	-17620	-5865.9		19569	3.9249	12247	21631			1.23	Si
SLV 2	0.73	-33827	-18114	1846.23		19153	3.9249	12164	21484			1.19	Si

Comb.	Quota	N	V par	M	σ0	σN	l'	fvd	Vt scorr.	Vt fess.diag.	Vt,lim	c.s.	Verifica
SLV 4	0.33	-50020	-18066	-5065.82		28321	3.9249	13998	24722			1.37	Si
SLV 4	0.73	-49513	-19017	2625.01		28034	3.9249	13940	24621			1.29	Si
SLV 1	0.33	-34563	-17620	-5865.9		19569	3.9249	12247	21631			1.23	Si
SLV 1	0.73	-33827	-18114	1846.23		19153	3.9249	12164	21484			1.19	Si

Verifica a pressoflessione fuori piano D.M. 17-01-18 (N.T.C.)

quota -0.175 Wa 0.08 denominatore 8 γM = 2

Comb.	fd	Sa	σ0	N	M	Mc	Coeff.s.	Verifica
SLV 6	143750	0.24	10304	-18199	289.33	3749.48	12.96	Si
SLV 5	143750	0.24	10304	-18199	289.33	3749.48	12.96	Si
SLV 9	143750	0.24	11648	-20573	289.33	4187.62	14.47	Si
SLV 10	143750	0.24	11648	-20573	289.33	4187.62	14.47	Si
SLV 1	143750	0.24	17999	-31790	289.33	6099.11	21.08	Si
SLV 2	143750	0.24	17999	-31790	289.33	6099.11	21.08	Si
SLV 13	143750	0.24	22479	-39703	289.33	7289.64	25.2	Si
SLV 14	143750	0.24	22479	-39703	289.33	7289.64	25.2	Si
SLV 3	143750	0.24	25939	-45813	289.33	8119.71	28.06	Si
SLV 4	143750	0.24	25939	-45813	289.33	8119.71	28.06	Si

Verifica dei meccanismi locali di collasso con analisi cinematica lineare

forza di aggancio al piano = 0 quota mezzeria = -0.175 Wa = 0.08 Ta = 0.0332

Comb.	N top	N base	V orto	α0	M*	e*	a0*	aLim	Verifica
SLV 9	-12644	-21555	-1741	0	2053.9	0.91	0	3.42705	No
SLV 6	-10726	-19406	-1660	0	1864	0.904	0	3.42705	No
SLV 5	-10726	-19406	-1660	0	1864	0.904	0	3.42705	No
SLV 10	-12644	-21555	-1741	0	2053.9	0.91	0	3.42705	No
SLV 13	-36703	-40760	-1567	0.046	4482.8	0.952	0.70368	3.6078	No
SLV 14	-36703	-40760	-1567	0.046	4482.8	0.952	0.70368	3.6078	No
SLV 1	-30309	-33595	-1297	0.048	3834	0.945	0.74551	3.6078	No
SLV 2	-30309	-33595	-1297	0.048	3834	0.945	0.74551	3.6078	No
SLV 16	-55407	-55072	-1337	0.059	6384.7	0.965	0.88833	3.6078	No
SLV 15	-55407	-55072	-1337	0.059	6384.7	0.965	0.88833	3.6078	No

Tabella dei coefficienti di sicurezza minimi

Stato limite	Coeff.s.	Comb.	Verifica
PF_SLU	9.574	SLU 84	Si
V_SLU	10.174	SLU 77	Si
PF_SLV	4.823	SLV 13	Si
V_SLV	1.084	SLV 13	Si
PFFP_SLV	12.959	SLV 5	Si
R_SLV	0	SLV 5	No

Maschio 30

Verifiche condotte secondo D.M. 17-01-18 (N.T.C.)

Dati geometrici

X ini.	Y ini.	X fin.	Y fin.	Quota i.	Quota.s	l	Sp.	h netta	h ini.	h fin.	a	a.s.,sx	a.s.,dx
-6.963	6.565	-5.308	6.565	L1	L3	1.655	0.45	2.99	2.99	2.99			

Caratteristiche del materiale

(Circolare 7 21-01-19 C8.5.I) Muratura in mattoni pieni e malta di calce LC2_Corti

fb	fk	fvk0	fmedio	τ0	fv0	μ	ϕ	fv,lim	E	G	FC
600000			345000	9000	20000	0.58	0.77	32500	320000000	128000000	1.2

Verifica a pressoflessione nel piano secondo D.M. 17-01-18 NTC §7.8.2.2.1 in combinazioni non sismiche, γM = 3

Comb.	Quota	N	M	σ0	Mu	c.s.	Verifica
SLU 80	0.33	-18779	-2733.54	25213	10730.76	3.926	Si
SLU 80	0.73	-18030	-3400.59	24208	10486.99	3.084	Si
SLU 82	0.33	-19474	-2874.9	26147	10943.38	3.807	Si
SLU 82	0.73	-18725	-3549.69	25141	10713.81	3.018	Si
SLU 84	0.33	-19616	-2883.23	26336	10985.01	3.81	Si
SLU 84	0.73	-18867	-3575.09	25331	10758.34	3.009	Si
SLU 77	0.33	-18878	-2745.02	25346	10761.88	3.921	Si
SLU 77	0.73	-18129	-3415.92	24341	10520.13	3.08	Si
SLU 75	0.33	-18746	-2737.35	25169	10720.33	3.916	Si
SLU 75	0.73	-17997	-3390.97	24163	10475.88	3.089	Si
SLU 83	0.33	-19607	-2882.57	26324	10982.3	3.81	Si
SLU 83	0.73	-18858	-3574.65	25319	10755.44	3.009	Si
SLU 79	0.33	-18770	-2732.88	25201	10727.83	3.925	Si
SLU 79	0.73	-18021	-3400.14	24195	10483.88	3.083	Si
SLU 81	0.33	-19465	-2874.25	26134	10940.63	3.806	Si
SLU 81	0.73	-18716	-3549.25	25129	10710.88	3.018	Si
SLU 74	0.33	-18737	-2736.69	25156	10717.4	3.916	Si
SLU 74	0.73	-17988	-3390.52	24151	10472.76	3.089	Si
SLU 78	0.33	-18887	-2745.67	25359	10764.77	3.921	Si
SLU 78	0.73	-18139	-3416.37	24353	10523.22	3.08	Si

Verifica a pressoflessione nel piano secondo D.M. 17-01-18 NTC §7.8.2.2.1 in combinazioni sismiche, γM = 2

Comb.	Quota	N	M	σ0	Mu	c.s.	Verifica
SLV 9	0.33	-5386	-569.4	7231	4193.22	7.364	Si
SLV 9	0.73	-4892	-1889.98	6568	3831.03	2.027	Si
SLV 6	0.33	-2831	-2035.4	3801	2270.08	1.115	Si
SLV 6	0.73	-2252	-1602.92	3024	1817.68	1.134	Si
SLV 2	0.33	-5857	-4125.74	7864	4535.36	1.099	Si

Comb.	Quota	N	M	σ0	Mu	c.s.	Verifica
SLV 2	0.73	-5150	-1631.78	6915	4021.14	2.464	Si
SLV 5	0.33	-2831	-2035.4	3801	2270.08	1.115	Si
SLV 5	0.73	-2252	-1602.92	3024	1817.68	1.134	Si
SLV 1	0.33	-5857	-4125.74	7864	4535.36	1.099	Si
SLV 1	0.73	-5150	-1631.78	6915	4021.14	2.464	Si
SLV 4	0.33	-11006	-4451.45	14776	8006.51	1.799	Si
SLV 4	0.73	-10275	-1943.57	13795	7543.13	3.881	Si
SLV 3	0.33	-11006	-4451.45	14776	8006.51	1.799	Si
SLV 3	0.73	-10275	-1943.57	13795	7543.13	3.881	Si
SLV 13	0.33	-14372	760.95	19296	10015.67	13.162	Si
SLV 13	0.73	-13951	-2588.65	18731	9775.47	3.776	Si
SLV 10	0.33	-5386	-569.4	7231	4193.22	7.364	Si
SLV 10	0.73	-4892	-1889.98	6568	3831.03	2.027	Si
SLV 14	0.33	-14372	760.95	19296	10015.67	13.162	Si
SLV 14	0.73	-13951	-2588.65	18731	9775.47	3.776	Si

Verifica a taglio nel piano secondo D.M. 17-01-18 (N.T.C.) §7.8.2.2.2 con rottura per scorrimento in combinazioni non sismiche, γM = 3

Comb.	Quota	N	V par	M	σ0	σN	I'	fvd	Vt scorr.	Vt fess.diag.	Vt,lim	c.s.	Verifica
SLU 83	0.33	-19607	1722	-2882.57		26324	1.6551	9065	6752			3.92	Si
SLU 83	0.73	-18858	1722	-3574.65		25319	1.6551	8931	6652			3.86	Si
SLU 77	0.33	-18878	1669	-2745.02		25346	1.6551	8935	6655			3.99	Si
SLU 77	0.73	-18129	1669	-3415.92		24341	1.6551	8801	6555			3.93	Si
SLU 84	0.33	-19616	1721	-2883.23		26336	1.6551	9067	6753			3.92	Si
SLU 84	0.73	-18867	1721	-3575.09		25331	1.6551	8933	6653			3.87	Si
SLU 75	0.33	-18746	1625	-2737.35		25169	1.6551	8911	6637			4.08	Si
SLU 75	0.73	-17997	1625	-3390.97		24163	1.6551	8777	6537			4.02	Si
SLU 78	0.33	-18887	1668	-2745.67		25359	1.6551	8937	6656			3.99	Si
SLU 78	0.73	-18139	1668	-3416.37		24353	1.6551	8803	6556			3.93	Si
SLU 81	0.33	-19465	1679	-2874.25		26134	1.6551	9040	6733			4.01	Si
SLU 81	0.73	-18716	1679	-3549.25		25129	1.6551	8906	6633			3.95	Si
SLU 79	0.33	-18770	1660	-2732.88		25201	1.6551	8916	6641			4	Si
SLU 79	0.73	-18021	1660	-3400.14		24195	1.6551	8782	6541			3.94	Si
SLU 74	0.33	-18737	1626	-2736.69		25156	1.6551	8910	6636			4.08	Si
SLU 74	0.73	-17988	1626	-3390.52		24151	1.6551	8776	6536			4.02	Si
SLU 82	0.33	-19474	1678	-2874.9		26147	1.6551	9042	6734			4.01	Si
SLU 82	0.73	-18725	1678	-3549.69		25141	1.6551	8908	6635			3.95	Si
SLU 80	0.33	-18779	1659	-2733.54		25213	1.6551	8917	6642			4	Si
SLU 80	0.73	-18030	1659	-3400.59		24208	1.6551	8783	6542			3.94	Si

Verifica a taglio nel piano secondo D.M. 17-01-18 (N.T.C.) §7.8.2.2.2 con rottura per scorrimento in combinazioni sismiche, γM = 2

Comb.	Quota	N	V par	M	σ0	σN	I'	fvd	Vt scorr.	Vt fess.diag.	Vt,lim	c.s.	Verifica
SLV 2	0.33	-5857	-3881	-4125.74		35218	0.3696	15377	2557			0.66	No, Vu<V
SLV 2	0.73	-5150	-3913	-1631.78		7470	1.5322	9827	6776			1.73	Si
SLV 14	0.33	-14372	7221	760.95		19296	1.6551	12193	9081			1.26	Si
SLV 14	0.73	-13951	7628	-2588.65		18731	1.6551	12079	8997			1.18	Si
SLV 6	0.33	-2831	1462	-2035.4		19304	0.3259	12194	1788			1.22	Si
SLV 6	0.73	-2252	2021	-1602.92		14402	0.3475	11214	1754			0.87	No, Vu<V
SLV 9	0.33	-5386	4792	-569.4		7231	1.6551	9779	7284			1.52	Si
SLV 9	0.73	-4892	5484	-1889.98		8213	1.3237	9976	5943			1.08	Si
SLV 4	0.33	-11006	-5130	-4451.45		19268	1.2693	12187	6961			1.36	Si
SLV 4	0.73	-10275	-5537	-1943.57		13795	1.6551	11092	8262			1.49	Si
SLV 1	0.33	-5857	-3881	-4125.74		35218	0.3696	15377	2557			0.66	No, Vu<V
SLV 1	0.73	-5150	-3913	-1631.78		7470	1.5322	9827	6776			1.73	Si
SLV 10	0.33	-5386	4792	-569.4		7231	1.6551	9779	7284			1.52	Si
SLV 10	0.73	-4892	5484	-1889.98		8213	1.3237	9976	5943			1.08	Si
SLV 3	0.33	-11006	-5130	-4451.45		19268	1.2693	12187	6961			1.36	Si
SLV 3	0.73	-10275	-5537	-1943.57		13795	1.6551	11092	8262			1.49	Si
SLV 5	0.33	-2831	1462	-2035.4		19304	0.3259	12194	1788			1.22	Si
SLV 5	0.73	-2252	2021	-1602.92		14402	0.3475	11214	1754			0.87	No, Vu<V
SLV 13	0.33	-14372	7221	760.95		19296	1.6551	12193	9081			1.26	Si
SLV 13	0.73	-13951	7628	-2588.65		18731	1.6551	12079	8997			1.18	Si

Verifica a pressoflessione fuori piano D.M. 17-01-18 (N.T.C.)

quota -0.175 Wa 0.08 denominatore 8 γM = 2

Comb.	fd	Sa	σ0	N	M	Mc	Coeff.s.	Verifica
SLV 2	143750	0.24	3065	-2283	122.01	500.81	4.1	Si
SLV 1	143750	0.24	3065	-2283	122.01	500.81	4.1	Si
SLV 5	143750	0.24	3807	-2835	122.01	618.08	5.07	Si
SLV 6	143750	0.24	3807	-2835	122.01	618.08	5.07	Si
SLV 3	143750	0.24	8445	-6290	122.01	1317.42	10.8	Si
SLV 4	143750	0.24	8445	-6290	122.01	1317.42	10.8	Si
SLV 9	143750	0.24	9822	-7315	122.01	1513.67	12.41	Si
SLV 10	143750	0.24	9822	-7315	122.01	1513.67	12.41	Si
SLV 8	143750	0.24	21739	-16191	122.01	2994.9	24.55	Si
SLV 7	143750	0.24	21739	-16191	122.01	2994.9	24.55	Si

Verifica dei meccanismi locali di collasso con analisi cinematica lineare

forza di aggancio al piano = 0 quota mezzeria = -0.175 Wa = 0.08 Ta = 0.0332

Comb.	N top	N base	V orto	α0	M*	e*	a0*	aLim	Verifica
SLV 5	2636	-6507	42	0	0	0	0	3.42705	No, Trazione
SLV 6	2636	-6507	42	0	0	0	0	3.42705	No, Trazione
SLV 9	1578	-13263	50	0	0	0	0	3.42705	No, Trazione
SLV 10	1578	-13263	50	0	0	0	0	3.42705	No, Trazione
SLV 8	-20632	-17019	-263	0.07	2414.4	0.961	1.06264	3.42705	No
SLV 7	-20632	-17019	-263	0.07	2414.4	0.961	1.06264	3.42705	No
SLV 11	-21690	-23774	-255	0.071	2522	0.963	1.06987	3.42705	No
SLV 12	-21690	-23774	-255	0.071	2522	0.963	1.06987	3.42705	No
SLV 3	-11254	-5458	-167	0.074	1462	0.94	1.1453	3.6078	No
SLV 4	-11254	-5458	-167	0.074	1462	0.94	1.1453	3.6078	No

Tabella dei coefficienti di sicurezza minimi

Stato limite	Coeff.s.	Comb.	Verifica
PF_SLU	3.009	SLU 83	Si
V_SLU	3.864	SLU 83	Si
PF_SLV	1.099	SLV 1	Si
V_SLV	0.659	SLV 1	No
PFFP_SLV	4.105	SLV 1	Si
R_SLV	0	SLV 10	No

Maschio 31

Verifiche condotte secondo D.M. 17-01-18 (N.T.C.)

Dati geometrici

X ini.	Y ini.	X fin.	Y fin.	Quota i.	Quota.s	l	Sp.	h netta	h ini.	h fin.	a	a.s.,sx	a.s.,dx
-11.01	-4.714	-11.01	-1.916	L1	L2	2.798	0.45	2.25	2.25	2.25			

Caratteristiche del materiale

(Circolare 7 21-01-19 C8.5.I) Muratura in mattoni pieni e malta di calce LC2_Corti

fb	fk	fvk0	fmedio	τ0	fv0	μ	ϕ	fv,lim	E	G	FC
600000			345000	9000	20000	0.58	0.77	32500	320000000	128000000	1.2

Verifica a pressoflessione nel piano secondo D.M. 17-01-18 NTC §7.8.2.2.1 in combinazioni non sismiche, γM = 3

Comb.	Quota	N	M	σ0	Mu	c.s.	Verifica
SLU 82	-1.67	-60905	3365.48	48372	34608.94	10.283	Si
SLU 82	0.58	-60890	3922.12	48360	34612.78	8.825	Si
SLU 76	-1.67	-58954	3550.1	46822	35069.2	9.878	Si
SLU 76	0.58	-58809	3938.74	46707	35099.21	8.911	Si
SLU 81	-1.67	-61308	2969.79	48692	34500.8	11.617	Si
SLU 81	0.58	-61278	3704.16	48668	34509.07	9.316	Si
SLU 73	-1.67	-58436	3452.47	46411	35173.86	10.188	Si
SLU 73	0.58	-58246	3820.05	46260	35210.49	9.217	Si
SLU 77	-1.67	-60416	3033	47983	34734.16	11.452	Si
SLU 77	0.58	-60319	3759.34	47906	34758.09	9.246	Si
SLU 84	-1.67	-61423	3463.11	48783	34469.42	9.953	Si
SLU 84	0.58	-61453	4040.82	48807	34460.88	8.528	Si
SLU 75	-1.67	-59495	3331.07	47252	34952.07	10.493	Si
SLU 75	0.58	-59368	3858.61	47151	34980.16	9.065	Si
SLU 83	-1.67	-61826	3067.41	49103	34355.59	11.2	Si
SLU 83	0.58	-61841	3822.86	49115	34351.22	8.986	Si
SLU 78	-1.67	-60012	3428.69	47663	34832.47	10.159	Si
SLU 78	0.58	-59931	3977.3	47598	34851.64	8.763	Si
SLU 80	-1.67	-59740	3383.92	47447	34896.15	10.312	Si
SLU 80	0.58	-59631	3912.13	47360	34921.31	8.926	Si

Verifica a pressoflessione nel piano secondo D.M. 17-01-18 NTC §7.8.2.2.1 in combinazioni sismiche, γM = 2

Comb.	Quota	N	M	σ0	Mu	c.s.	Verifica
SLV 11	-1.67	-24828	9519.37	19719	29129.39	3.06	Si
SLV 11	0.58	-21930	7661.63	17417	26306.53	3.434	Si
SLV 12	-1.67	-24828	9519.37	19719	29129.39	3.06	Si
SLV 12	0.58	-21930	7661.63	17417	26306.53	3.434	Si
SLV 5	-1.67	-59401	-5805.27	47177	51016.04	8.788	Si
SLV 5	0.58	-61360	-3143.54	48733	51605.47	16.416	Si
SLV 8	-1.67	-26967	9529.04	21418	31113.96	3.265	Si
SLV 8	0.58	-24602	8161.9	19539	28914.06	3.543	Si
SLV 6	-1.67	-59401	-5805.27	47177	51016.04	8.788	Si
SLV 6	0.58	-61360	-3143.54	48733	51605.47	16.416	Si
SLV 3	-1.67	-40814	4173.31	32415	41951.07	10.052	Si
SLV 3	0.58	-40585	4788.65	32233	41799.97	8.729	Si
SLV 7	-1.67	-26967	9529.04	21418	31113.96	3.265	Si
SLV 7	0.58	-24602	8161.9	19539	28914.06	3.543	Si
SLV 4	-1.67	-40814	4173.31	32415	41951.07	10.052	Si
SLV 4	0.58	-40585	4788.65	32233	41799.97	8.729	Si
SLV 10	-1.67	-57263	-5814.93	45479	50292.95	8.649	Si
SLV 10	0.58	-58688	-3643.82	46611	50784.25	13.937	Si
SLV 9	-1.67	-57263	-5814.93	45479	50292.95	8.649	Si
SLV 9	0.58	-58688	-3643.82	46611	50784.25	13.937	Si

Verifica a taglio nel piano secondo D.M. 17-01-18 (N.T.C.) §7.8.2.2.2 con rottura per scorrimento in combinazioni non sismiche, γM = 3

Comb.	Quota	N	V par	M	σ0	σN	l'	fvd	Vt scorr.	Vt fess.diag.	Vt,lim	c.s.	Verifica
SLU 79	-1.67	-60144	-8324	2988.23		47767	2.798	10833	13640			1.64	Si
SLU 79	0.58	-60019	-4053	3694.17		47668	2.798	10833	13640			3.37	Si
SLU 82	-1.67	-60905	-8054	3365.48		48372	2.798	10833	13640			1.69	Si
SLU 82	0.58	-60890	-3676	3922.12		48360	2.798	10833	13640			3.71	Si
SLU 84	-1.67	-61423	-8144	3463.11		48783	2.798	10833	13640			1.67	Si
SLU 84	0.58	-61453	-3721	4040.82		48807	2.798	10833	13640			3.67	Si
SLU 81	-1.67	-61308	-8484	2969.79		48692	2.798	10833	13640			1.61	Si
SLU 81	0.58	-61278	-4136	3704.16		48668	2.798	10833	13640			3.3	Si
SLU 74	-1.67	-59898	-8289	2935.37		47572	2.798	10833	13640			1.65	Si
SLU 74	0.58	-59756	-4046	3640.65		47459	2.798	10833	13640			3.37	Si
SLU 77	-1.67	-60416	-8380	3033		47983	2.798	10833	13640			1.63	Si
SLU 77	0.58	-60319	-4090	3759.34		47906	2.798	10833	13640			3.33	Si
SLU 80	-1.67	-59740	-7894	3383.92		47447	2.798	10833	13640			1.73	Si
SLU 80	0.58	-59631	-3593	3912.13		47360	2.798	10833	13640			3.8	Si
SLU 78	-1.67	-60012	-7950	3428.69		47663	2.798	10833	13640			1.72	Si
SLU 78	0.58	-59931	-3630	3977.3		47598	2.798	10833	13640			3.76	Si
SLU 83	-1.67	-61826	-8575	3067.41		49103	2.798	10833	13640			1.59	Si

Comb.	Quota	N	V par	M	σ0	σN	l'	fvd	Vt scorr.	Vt fess.diag.	Vt,lim	c.s.	Verifica
SLU 83	0.58	-61841	-4181	3822.86		49115	2.798	10833	13640			3.26	Si
SLU 62	-1.67	-57859	-7939	2649.19		45952	2.798	10833	13640			1.72	Si
SLU 62	0.58	-57449	-3849	3272.67		45627	2.798	10833	13640			3.54	Si

Verifica a taglio nel piano secondo D.M. 17-01-18 (N.T.C.) §7.8.2.2.2 con rottura per scorrimento in combinazioni sismiche, γM = 2

Comb.	Quota	N	V par	M	σ0	σN	l'	fvd	Vt scorr.	Vt fess.diag.	Vt,lim	c.s.	Verifica
SLV 8	-1.67	-26967	5920	9529.04		21418	2.798	12617	15886			2.68	Si
SLV 8	0.58	-24602	8134	8161.9		19539	2.798	12241	15413			1.89	Si
SLV 7	-1.67	-26967	5920	9529.04		21418	2.798	12617	15886			2.68	Si
SLV 7	0.58	-24602	8134	8161.9		19539	2.798	12241	15413			1.89	Si
SLV 5	-1.67	-59401	-18639	-5805.27		47177	2.798	16250	20460			1.1	Si
SLV 5	0.58	-61360	-14950	-3143.54		48733	2.798	16250	20460			1.37	Si
SLV 11	-1.67	-24828	7163	9519.37		19719	2.798	12277	15458			2.16	Si
SLV 11	0.58	-21930	9387	7661.63		17417	2.798	11817	14878			1.59	Si
SLV 1	-1.67	-50544	-11493	-426.98		40143	2.798	16250	20460			1.78	Si
SLV 1	0.58	-51612	-8332	1397.02		40991	2.798	16250	20460			2.46	Si
SLV 9	-1.67	-57263	-17396	-5814.93		45479	2.798	16250	20460			1.18	Si
SLV 9	0.58	-58688	-13697	-3643.82		46611	2.798	16250	20460			1.49	Si
SLV 10	-1.67	-57263	-17396	-5814.93		45479	2.798	16250	20460			1.18	Si
SLV 10	0.58	-58688	-13697	-3643.82		46611	2.798	16250	20460			1.49	Si
SLV 2	-1.67	-50544	-11493	-426.98		40143	2.798	16250	20460			1.78	Si
SLV 2	0.58	-51612	-8332	1397.02		40991	2.798	16250	20460			2.46	Si
SLV 6	-1.67	-59401	-18639	-5805.27		47177	2.798	16250	20460			1.1	Si
SLV 6	0.58	-61360	-14950	-3143.54		48733	2.798	16250	20460			1.37	Si
SLV 12	-1.67	-24828	7163	9519.37		19719	2.798	12277	15458			2.16	Si
SLV 12	0.58	-21930	9387	7661.63		17417	2.798	11817	14878			1.59	Si

Verifica a pressoflessione fuori piano D.M. 17-01-18 (N.T.C.)

quota -0.545 Wa 0.08 denominatore 8 γM = 2

Comb.	fd	Sa	σ0	N	M	Mc	Coeff.s.	Verifica
SLV 12	143750	0.24	19895	-25049	116.8	4718.44	40.4	Si
SLV 11	143750	0.24	19895	-25049	116.8	4718.44	40.4	Si
SLV 8	143750	0.24	21791	-27437	116.8	5072.43	43.43	Si
SLV 7	143750	0.24	21791	-27437	116.8	5072.43	43.43	Si
SLV 15	143750	0.24	26813	-33760	116.8	5929.19	50.76	Si
SLV 16	143750	0.24	26813	-33760	116.8	5929.19	50.76	Si
SLV 3	143750	0.24	33135	-41720	116.8	6841.48	58.57	Si
SLV 4	143750	0.24	33135	-41720	116.8	6841.48	58.57	Si
SLV 13	143750	0.24	34640	-43615	116.8	7031.32	60.2	Si
SLV 14	143750	0.24	34640	-43615	116.8	7031.32	60.2	Si

Verifica dei meccanismi locali di collasso con analisi cinematica lineare

forza di aggancio al piano = 0 quota mezzeria = -0.545 Wa = 0.08 Ta = 0.0188

Comb.	N top	N base	V orto	α0	M*	e*	a0*	aLim	Verifica
SLV 2	-51612	-50544	31	0.104	5654.2	0.978	1.54726	2.92319	No
SLV 1	-51612	-50544	31	0.104	5654.2	0.978	1.54726	2.92319	No
SLV 3	-40585	-40814	62	0.104	4530.9	0.973	1.56064	2.92319	No
SLV 4	-40585	-40814	62	0.104	4530.9	0.973	1.56064	2.92319	No
SLV 14	-42705	-43416	11	0.105	4746.9	0.974	1.57244	2.92319	No
SLV 13	-42705	-43416	11	0.105	4746.9	0.974	1.57244	2.92319	No
SLV 5	-61360	-59401	-11	0.104	6647.4	0.981	1.53766	2.84379	No
SLV 6	-61360	-59401	-11	0.104	6647.4	0.981	1.53766	2.84379	No
SLV 9	-58688	-57263	-17	0.104	6375.1	0.98	1.53984	2.84379	No
SLV 10	-58688	-57263	-17	0.104	6375.1	0.98	1.53984	2.84379	No

Tabella dei coefficienti di sicurezza minimi

Stato limite	Coeff.s.	Comb.	Verifica
PF_SLU	8.528	SLU 84	Si
V_SLU	1.591	SLU 83	Si
PF_SLV	3.06	SLV 11	Si
V_SLV	1.098	SLV 5	Si
PFFP_SLV	40.398	SLV 11	Si
R_SLV	0.529	SLV 1	No

Maschio 32

Verifiche condotte secondo D.M. 17-01-18 (N.T.C.)

Dati geometrici

X ini.	Y ini.	X fin.	Y fin.	Quota i.	Quota.s	l	Sp.	h netta	h ini.	h fin.	a	a.s.,sx	a.s.,dx
-11.01	-4.714	-11.01	-1.916	L2	L3	2.798	0.45	0.74	0.74	0.74			

Caratteristiche del materiale

(Circolare 7 21-01-19 C8.5.I) Muratura in mattoni pieni e malta di calce LC2_Corti

fb	fk	fvk0	fmedio	τ0	fv0	μ	ϕ	fv,lim	E	G	FC
600000			345000	9000	20000	0.58	0.77	32500	320000000	128000000	1.2

Verifica a pressoflessione nel piano secondo D.M. 17-01-18 NTC §7.8.2.2.1 in combinazioni non sismiche, γM = 3

Comb.	Quota	N	M	σ0	Mu	c.s.	Verifica
SLU 82	0.58	-67296	9055.65	53447	32374.23	3.575	Si
SLU 82	1.32	-62631	5826.85	49743	34115.05	5.855	Si
SLU 83	0.58	-68328	8899.2	54268	31908.51	3.586	Si
SLU 83	1.32	-63566	5819.36	50485	33813.77	5.811	Si
SLU 84	0.58	-67933	9249.99	53954	32090.05	3.469	Si
SLU 84	1.32	-63226	5976.23	50215	33926.25	5.677	Si

Comb.	Quota	N	M	σ0	Mu	c.s.	Verifica
SLU 78	0.58	-66312	9094.23	52666	32790.59	3.606	Si
SLU 78	1.32	-61656	5866.82	48969	34403.98	5.864	Si
SLU 77	0.58	-66707	8743.44	52980	32626.52	3.732	Si
SLU 77	1.32	-61997	5709.95	49239	34306.07	6.008	Si
SLU 79	0.58	-66366	8643.24	52709	32768.36	3.791	Si
SLU 79	1.32	-61675	5624.72	48983	34398.73	6.116	Si
SLU 80	0.58	-65972	8994.04	52396	32928.76	3.661	Si
SLU 80	1.32	-61335	5781.6	48713	34493.66	5.966	Si
SLU 76	0.58	-65070	9033.56	51680	33278.79	3.684	Si
SLU 76	1.32	-60513	5736.8	48061	34709.65	6.05	Si
SLU 81	0.58	-67691	8704.86	53761	32199.56	3.699	Si
SLU 81	1.32	-62972	5669.98	50013	34008.09	5.998	Si
SLU 75	0.58	-65675	8899.89	52160	33046.56	3.713	Si
SLU 75	1.32	-61062	5717.44	48497	34567.34	6.046	Si

Verifica a pressoflessione nel piano secondo D.M. 17-01-18 NTC §7.8.2.2.1 in combinazioni sismiche, γM = 2

Comb.	Quota	N	M	σ0	Mu	c.s.	Verifica
SLV 2	0.58	-57214	3505.1	45440	50275.44	14.344	Si
SLV 2	1.32	-52944	3763.94	42049	48578.99	12.906	Si
SLV 3	0.58	-45921	8545.87	36471	45067.86	5.274	Si
SLV 3	1.32	-42371	7213.79	33651	42951.33	5.954	Si
SLV 16	0.58	-34915	7745.54	27730	37760.37	4.875	Si
SLV 16	1.32	-32459	3321.52	25779	35829.35	10.787	Si
SLV 7	0.58	-28894	14146.66	22948	32831.02	2.321	Si
SLV 7	1.32	-26566	9876.32	21099	30748.38	3.113	Si
SLV 4	0.58	-45921	8545.87	36471	45067.86	5.274	Si
SLV 4	1.32	-42371	7213.79	33651	42951.33	5.954	Si
SLV 11	0.58	-25592	13906.56	20326	29847.6	2.146	Si
SLV 11	1.32	-23593	8708.64	18738	27944.7	3.209	Si
SLV 12	0.58	-25592	13906.56	20326	29847.6	2.146	Si
SLV 12	1.32	-23593	8708.64	18738	27944.7	3.209	Si
SLV 8	0.58	-28894	14146.66	22948	32831.02	2.321	Si
SLV 8	1.32	-26566	9876.32	21099	30748.38	3.113	Si
SLV 1	0.58	-57214	3505.1	45440	50275.44	14.344	Si
SLV 1	1.32	-52944	3763.94	42049	48578.99	12.906	Si
SLV 15	0.58	-34915	7745.54	27730	37760.37	4.875	Si
SLV 15	1.32	-32459	3321.52	25779	35829.35	10.787	Si

Verifica a taglio nel piano secondo D.M. 17-01-18 (N.T.C.) §7.8.2.2.2 con rottura per scorrimento in combinazioni non sismiche, γM = 3

Comb.	Quota	N	V par	M	σ0	σN	I'	fvd	Vt scorr.	Vt fess.diag.	Vt,lim	c.s.	Verifica
SLU 53	0.58	-61188	-3564	7564.81		48597	2.798	10833	13640			3.83	Si
SLU 53	1.32	-56749	-2997	4805.1		45071	2.798	10833	13640			4.55	Si
SLU 83	0.58	-68328	-4020	8899.2		54268	2.798	10833	13640			3.39	Si
SLU 83	1.32	-63566	-3375	5819.36		50485	2.798	10833	13640			4.04	Si
SLU 81	0.58	-67691	-3973	8704.86		53761	2.798	10833	13640			3.43	Si
SLU 81	1.32	-62972	-3340	5669.98		50013	2.798	10833	13640			4.08	Si
SLU 77	0.58	-66707	-3939	8743.44		52980	2.798	10833	13640			3.46	Si
SLU 77	1.32	-61997	-3308	5709.95		49239	2.798	10833	13640			4.12	Si
SLU 56	0.58	-61826	-3610	7759.15		49103	2.798	10833	13640			3.78	Si
SLU 56	1.32	-57343	-3032	4954.48		45543	2.798	10833	13640			4.5	Si
SLU 79	0.58	-66366	-3900	8643.24		52709	2.798	10833	13640			3.5	Si
SLU 79	1.32	-61675	-3275	5624.72		48983	2.798	10833	13640			4.16	Si
SLU 60	0.58	-62810	-3645	7720.57		49884	2.798	10833	13640			3.74	Si
SLU 60	1.32	-58318	-3064	4914.51		46317	2.798	10833	13640			4.45	Si
SLU 74	0.58	-66070	-3892	8549.1		52473	2.798	10833	13640			3.5	Si
SLU 74	1.32	-61403	-3273	5560.57		48767	2.798	10833	13640			4.17	Si
SLU 58	0.58	-61485	-3572	7658.96		48833	2.798	10833	13640			3.82	Si
SLU 58	1.32	-57021	-2999	4869.25		45287	2.798	10833	13640			4.55	Si
SLU 62	0.58	-63447	-3692	7914.91		50391	2.798	10833	13640			3.69	Si
SLU 62	1.32	-58912	-3099	5063.89		46789	2.798	10833	13640			4.4	Si

Verifica a taglio nel piano secondo D.M. 17-01-18 (N.T.C.) §7.8.2.2.2 con rottura per scorrimento in combinazioni sismiche, γM = 2

Comb.	Quota	N	V par	M	σ0	σN	I'	fvd	Vt scorr.	Vt fess.diag.	Vt,lim	c.s.	Verifica
SLV 9	0.58	-63234	-14047	-2896.03		50222	2.798	16250	20460			1.46	Si
SLV 9	1.32	-58836	-12826	-2790.86		46729	2.798	16250	20460			1.6	Si
SLV 8	0.58	-28894	8710	14146.66		23535	2.7282	13040	16010			1.84	Si
SLV 8	1.32	-26566	8321	9876.32		21099	2.798	12553	15806			1.9	Si
SLV 12	0.58	-25592	10102	13906.56		22156	2.5668	12765	14744			1.46	Si
SLV 12	1.32	-23593	9898	8708.64		18738	2.798	12081	15211			1.54	Si
SLV 11	0.58	-25592	10102	13906.56		22156	2.5668	12765	14744			1.46	Si
SLV 11	1.32	-23593	9898	8708.64		18738	2.798	12081	15211			1.54	Si
SLV 10	0.58	-63234	-14047	-2896.03		50222	2.798	16250	20460			1.46	Si
SLV 10	1.32	-58836	-12826	-2790.86		46729	2.798	16250	20460			1.6	Si
SLV 7	0.58	-28894	8710	14146.66		23535	2.7282	13040	16010			1.84	Si
SLV 7	1.32	-26566	8321	9876.32		21099	2.798	12553	15806			1.9	Si
SLV 5	0.58	-66536	-15439	-2655.93		52844	2.798	16250	20460			1.33	Si
SLV 5	1.32	-61810	-14403	-1623.18		49090	2.798	16250	20460			1.42	Si
SLV 6	0.58	-66536	-15439	-2655.93		52844	2.798	16250	20460			1.33	Si
SLV 6	1.32	-61810	-14403	-1623.18		49090	2.798	16250	20460			1.42	Si
SLV 1	0.58	-57214	-8612	3505.1		45440	2.798	16250	20460			2.38	Si
SLV 1	1.32	-52944	-8289	3763.94		42049	2.798	16250	20460			2.47	Si
SLV 2	0.58	-57214	-8612	3505.1		45440	2.798	16250	20460			2.38	Si
SLV 2	1.32	-52944	-8289	3763.94		42049	2.798	16250	20460			2.47	Si

Verifica a pressoflessione fuori piano D.M. 17-01-18 (N.T.C.)

quota 0.95 Wa 0.08 denominatore 8 γM = 2

Comb.	fd	Sa	σ0	N	M	Mc	Coeff.s.	Verifica
SLV 11	143750	0.26	17847	-22472	13.66	4317.59	316.15	Si
SLV 12	143750	0.26	17847	-22472	13.66	4317.59	316.15	Si

Comb.	fd	Sa	σ0	N	M	Mc	Coeff.s.	Verifica
SLV 8	143750	0.26	20399	-25684	13.66	4814.14	352.51	Si
SLV 7	143750	0.26	20399	-25684	13.66	4814.14	352.51	Si
SLV 16	143750	0.26	25769	-32445	13.66	5760.63	421.81	Si
SLV 15	143750	0.26	25769	-32445	13.66	5760.63	421.81	Si
SLV 3	143750	0.26	34273	-43153	13.66	6986.03	511.54	Si
SLV 4	143750	0.26	34273	-43153	13.66	6986.03	511.54	Si
SLV 13	143750	0.26	35110	-44207	13.66	7088.44	519.04	Si
SLV 14	143750	0.26	35110	-44207	13.66	7088.44	519.04	Si

Verifica dei meccanismi locali di collasso con analisi cinematica lineare

forza di aggancio al piano = 0 quota mezzeria = 0.95 Wa = 0.08 Ta = 0.002

Comb.	N top	N base	V orto	α0	M*	e*	a0*	aLim	Verifica
SLV 10	-58836	-63234	480	0.3	6126.1	0.993	4.39441	2.58024	Si
SLV 9	-58836	-63234	480	0.3	6126.1	0.993	4.39441	2.58024	Si
SLV 6	-61810	-66536	470	0.301	6429.2	0.993	4.39784	2.58024	Si
SLV 5	-61810	-66536	470	0.301	6429.2	0.993	4.39784	2.58024	Si
SLV 14	-43032	-46207	275	0.304	4515.2	0.991	4.45376	2.58742	Si
SLV 13	-43032	-46207	275	0.304	4515.2	0.991	4.45376	2.58742	Si
SLV 1	-52944	-57214	243	0.304	5525.5	0.992	4.45615	2.58742	Si
SLV 2	-52944	-57214	243	0.304	5525.5	0.992	4.45615	2.58742	Si
SLV 3	-42371	-45921	57	0.309	4447.8	0.991	4.52805	2.58742	Si
SLV 4	-42371	-45921	57	0.309	4447.8	0.991	4.52805	2.58742	Si

Tabella dei coefficienti di sicurezza minimi

Stato limite	Coeff.s.	Comb.	Verifica
PF_SLU	3.469	SLU 84	Si
V_SLU	3.393	SLU 83	Si
PF_SLV	2.146	SLV 11	Si
V_SLV	1.325	SLV 5	Si
PFFP_SLV	316.148	SLV 11	Si
R_SLV	1.703	SLV 9	Si

Maschio 33

Verifiche condotte secondo D.M. 17-01-18 (N.T.C.)

Dati geometrici

X ini.	Y ini.	X fin.	Y fin.	Quota i.	Quota.s	l	Sp.	h netta	h ini.	h fin.	a	a.s.,sx	a.s.,dx
-11.01	-1.916	-11.01	-0.354	L1	Z medio 95 cm	1.562	0.45	2.62	2.25	2.99			

Caratteristiche del materiale

(Circolare 7 21-01-19 C8.5.I) Muratura in mattoni pieni e malta di calce LC2_Corti

fb	fk	fvk0	fmedio	τ0	fv0	μ	ϕ	fv,lim	E	G	FC
600000			345000	9000	20000	0.58	0.77	32500	320000000	128000000	1.2

Verifica a pressoflessione nel piano secondo D.M. 17-01-18 NTC §7.8.2.2.1 in combinazioni non sismiche, γM = 3

Comb.	Quota	N	M	σ0	Mu	c.s.	Verifica
SLU 74	-1.67	-36460	430.2	51877	10339.35	24.034	Si
SLU 74	0.58	-39508	-835.76	56214	9561.12	11.44	Si
SLU 78	-1.67	-37151	531.35	52861	10184.95	19.168	Si
SLU 78	0.58	-40379	-796.22	57453	9292.14	11.67	Si
SLU 75	-1.67	-36705	513.5	52226	10286.06	20.031	Si
SLU 75	0.58	-39833	-797.27	56677	9463.03	11.869	Si
SLU 80	-1.67	-36934	525.44	52552	10234.88	19.479	Si
SLU 80	0.58	-40103	-796.88	57060	9379.64	11.77	Si
SLU 81	-1.67	-37296	439.33	53067	10151.09	23.106	Si
SLU 81	0.58	-40517	-843.1	57650	9247.53	10.968	Si
SLU 82	-1.67	-37541	522.64	53416	10092.19	19.31	Si
SLU 82	0.58	-40843	-804.61	58113	9140.47	11.36	Si
SLU 79	-1.67	-36688	442.13	52202	10289.71	23.273	Si
SLU 79	0.58	-39777	-835.37	56597	9480.13	11.348	Si
SLU 84	-1.67	-37988	540.49	54051	9980.91	18.466	Si
SLU 84	0.58	-41388	-803.57	58890	8954.55	11.144	Si
SLU 77	-1.67	-36906	448.04	52512	10241.24	22.858	Si
SLU 77	0.58	-40053	-834.71	56990	9395.08	11.255	Si
SLU 83	-1.67	-37742	457.18	53702	10042.8	21.967	Si
SLU 83	0.58	-41063	-842.05	58426	9066.46	10.767	Si

Verifica a pressoflessione nel piano secondo D.M. 17-01-18 NTC §7.8.2.2.1 in combinazioni sismiche, γM = 2

Comb.	Quota	N	M	σ0	Mu	c.s.	Verifica
SLV 14	-1.67	-20915	-658.88	29759	12354.66	18.751	Si
SLV 14	0.58	-21894	-1062.45	31152	12738.06	11.989	Si
SLV 7	-1.67	-29025	2525.52	41298	15004.79	5.941	Si
SLV 7	0.58	-33592	776.24	47796	15970.67	20.575	Si
SLV 6	-1.67	-23499	-1851.08	33435	13328.81	7.201	Si
SLV 6	0.58	-22292	-2033.82	31719	12889.12	6.337	Si
SLV 10	-1.67	-21413	-2007.82	30468	12552.09	6.252	Si
SLV 10	0.58	-20283	-2039.43	28860	12098.02	5.932	Si
SLV 13	-1.67	-20915	-658.88	29759	12354.66	18.751	Si
SLV 13	0.58	-21894	-1062.45	31152	12738.06	11.989	Si
SLV 5	-1.67	-23499	-1851.08	33435	13328.81	7.201	Si
SLV 5	0.58	-22292	-2033.82	31719	12889.12	6.337	Si
SLV 8	-1.67	-29025	2525.52	41298	15004.79	5.941	Si
SLV 8	0.58	-33592	776.24	47796	15970.67	20.575	Si
SLV 9	-1.67	-21413	-2007.82	30468	12552.09	6.252	Si

Comb.	Quota	N	M	σ0	Mu	c.s.	Verifica
SLV 9	0.58	-20283	-2039.43	28860	12098.02	5.932	Si
SLV 12	-1.67	-26940	2368.78	38331	14437.64	6.095	Si
SLV 12	0.58	-31582	770.63	44937	15592.46	20.233	Si
SLV 11	-1.67	-26940	2368.78	38331	14437.64	6.095	Si
SLV 11	0.58	-31582	770.63	44937	15592.46	20.233	Si

Verifica a taglio nel piano secondo D.M. 17-01-18 (N.T.C.) §7.8.2.2.2 con rottura per scorrimento in combinazioni non sismiche, γM = 3

Comb.	Quota	N	V par	M	σ0	σN	l'	fvd	Vt scorr.	Vt fess.diag.	Vt,lim	c.s.	Verifica
SLU 73	-1.67	-36205	2801	545.28		51515	1.5618	10833	7614			2.72	Si
SLU 73	0.58	-39229	2629	-773.32		55817	1.5618	10833	7614			2.9	Si
SLU 80	-1.67	-36934	2664	525.44		52552	1.5618	10833	7614			2.86	Si
SLU 80	0.58	-40103	2540	-796.88		57060	1.5618	10833	7614			3	Si
SLU 68	-1.67	-33151	2627	486.37		47170	1.5618	10833	7614			2.9	Si
SLU 68	0.58	-35501	2479	-759.13		50513	1.5618	10833	7614			3.07	Si
SLU 75	-1.67	-36705	2657	513.5		52226	1.5618	10833	7614			2.87	Si
SLU 75	0.58	-39833	2519	-797.27		56677	1.5618	10833	7614			3.02	Si
SLU 76	-1.67	-36651	2821	563.13		52150	1.5618	10833	7614			2.7	Si
SLU 76	0.58	-39774	2662	-772.27		56593	1.5618	10833	7614			2.86	Si
SLU 55	-1.67	-33813	2663	487.23		48111	1.5618	10833	7614			2.86	Si
SLU 55	0.58	-36339	2448	-743.8		51705	1.5618	10833	7614			3.11	Si
SLU 84	-1.67	-37988	2727	540.49		54051	1.5618	10833	7614			2.79	Si
SLU 84	0.58	-41388	2585	-803.57		58890	1.5618	10833	7614			2.95	Si
SLU 82	-1.67	-37541	2707	522.64		53416	1.5618	10833	7614			2.81	Si
SLU 82	0.58	-40843	2551	-804.61		58113	1.5618	10833	7614			2.98	Si
SLU 78	-1.67	-37151	2676	531.35		52861	1.5618	10833	7614			2.84	Si
SLU 78	0.58	-40379	2553	-796.22		57453	1.5618	10833	7614			2.98	Si
SLU 52	-1.67	-33366	2643	469.38		47475	1.5618	10833	7614			2.88	Si
SLU 52	0.58	-35793	2414	-744.85		50929	1.5618	10833	7614			3.15	Si

Verifica a taglio nel piano secondo D.M. 17-01-18 (N.T.C.) §7.8.2.2.2 con rottura per scorrimento in combinazioni sismiche, γM = 2

Comb.	Quota	N	V par	M	σ0	σN	l'	fvd	Vt scorr.	Vt fess.diag.	Vt,lim	c.s.	Verifica
SLV 12	-1.67	-26940	8507	2368.78		38331	1.5618	16000	11245			1.32	Si
SLV 12	0.58	-31582	7583	770.63		44937	1.5618	16250	11421			1.51	Si
SLV 6	-1.67	-23499	-5134	-1851.08		33435	1.5618	15020	10556			2.06	Si
SLV 6	0.58	-22292	-4413	-2033.82		31719	1.5618	14677	10315			2.34	Si
SLV 16	-1.67	-22573	3861	654.1		32118	1.5618	14757	10371			2.69	Si
SLV 16	0.58	-25284	3551	-219.44		35975	1.5618	15528	10913			3.07	Si
SLV 11	-1.67	-26940	8507	2368.78		38331	1.5618	16000	11245			1.32	Si
SLV 11	0.58	-31582	7583	770.63		44937	1.5618	16250	11421			1.51	Si
SLV 8	-1.67	-29025	8423	2525.52		41298	1.5618	16250	11421			1.36	Si
SLV 8	0.58	-33592	7473	776.24		47796	1.5618	16250	11421			1.53	Si
SLV 15	-1.67	-22573	3861	654.1		32118	1.5618	14757	10371			2.69	Si
SLV 15	0.58	-25284	3551	-219.44		35975	1.5618	15528	10913			3.07	Si
SLV 7	-1.67	-29025	8423	2525.52		41298	1.5618	16250	11421			1.36	Si
SLV 7	0.58	-33592	7473	776.24		47796	1.5618	16250	11421			1.53	Si
SLV 5	-1.67	-23499	-5134	-1851.08		33435	1.5618	15020	10556			2.06	Si
SLV 5	0.58	-22292	-4413	-2033.82		31719	1.5618	14677	10315			2.34	Si
SLV 9	-1.67	-21413	-5049	-2007.82		30468	1.5618	14427	10139			2.01	Si
SLV 9	0.58	-20283	-4303	-2039.43		28860	1.5618	14105	9913			2.3	Si
SLV 10	-1.67	-21413	-5049	-2007.82		30468	1.5618	14427	10139			2.01	Si
SLV 10	0.58	-20283	-4303	-2039.43		28860	1.5618	14105	9913			2.3	Si

Verifica a pressoflessione fuori piano D.M. 17-01-18 (N.T.C.)

quota -0.545 Wa 0.08 denominatore 8 γM = 2

Comb.	fd	Sa	σ0	N	M	Mc	Coeff.s.	Verifica
SLV 13	143750	0.24	30335	-21319	88.4	3606	40.79	Si
SLV 14	143750	0.24	30335	-21319	88.4	3606	40.79	Si
SLV 9	143750	0.24	30413	-21375	88.4	3612.24	40.86	Si
SLV 10	143750	0.24	30413	-21375	88.4	3612.24	40.86	Si
SLV 15	143750	0.24	33151	-23299	88.4	3819.98	43.21	Si
SLV 16	143750	0.24	33151	-23299	88.4	3819.98	43.21	Si
SLV 6	143750	0.24	33297	-23402	88.4	3830.5	43.33	Si
SLV 5	143750	0.24	33297	-23402	88.4	3830.5	43.33	Si
SLV 11	143750	0.24	39802	-27973	88.4	4243.74	48.01	Si
SLV 12	143750	0.24	39802	-27973	88.4	4243.74	48.01	Si

Verifica dei meccanismi locali di collasso con analisi cinematica lineare

forza di aggancio al piano = 0 quota mezzeria = -0.545 Wa = 0.08 Ta = 0.0255

Comb.	N top	N base	V orto	α0	M*	e*	a0*	aLim	Verifica
SLV 4	-31981	-29523	116	0.087	3515.6	0.977	1.28911	3.1871	No
SLV 3	-31981	-29523	116	0.087	3515.6	0.977	1.28911	3.1871	No
SLV 1	-28591	-27866	121	0.087	3170.3	0.975	1.29115	3.1871	No
SLV 2	-28591	-27866	121	0.087	3170.3	0.975	1.29115	3.1871	No
SLV 15	-25284	-22573	-87	0.088	2833.4	0.972	1.31495	3.1871	No
SLV 16	-25284	-22573	-87	0.088	2833.4	0.972	1.31495	3.1871	No
SLV 14	-21894	-20915	-82	0.088	2488.3	0.968	1.32741	3.1871	No
SLV 13	-21894	-20915	-82	0.088	2488.3	0.968	1.32741	3.1871	No
SLV 8	-33592	-29025	39	0.089	3679.7	0.978	1.31955	3.06724	No
SLV 7	-33592	-29025	39	0.089	3679.7	0.978	1.31955	3.06724	No

Tabella dei coefficienti di sicurezza minimi

Stato limite	Coeff.s.	Comb.	Verifica
PF_SLU	10.767	SLU 83	Si
V_SLU	2.699	SLU 76	Si
PF_SLV	5.932	SLV 9	Si
V_SLV	1.322	SLV 11	Si
PFFP_SLV	40.792	SLV 13	Si
R_SLV	0.404	SLV 3	No

Maschio 35

Verifiche condotte secondo D.M. 17-01-18 (N.T.C.)

Dati geometrici

X ini.	Y ini.	X fin.	Y fin.	Quota i.	Quota.s	l	Sp.	h netta	h ini.	h fin.	a	a.s.,sx	a.s.,dx
-11.01	-0.354	-11.01	1.032	L1	L3	1.386	0.45	2.99	2.99	2.99			

Caratteristiche del materiale

(Circolare 7 21-01-19 C8.5.I) Muratura in mattoni pieni e malta di calce LC2_Corti

fb	fk	fvk0	fmedio	τ0	fv0	μ	ϕ	fv,lim	E	G	FC
600000			345000	9000	20000	0.58	0.77	32500	320000000	128000000	1.2

Verifica a pressoflessione nel piano secondo D.M. 17-01-18 NTC §7.8.2.2.1 in combinazioni non sismiche, γM = 3

Comb.	Quota	N	M	σ0	Mu	c.s.	Verifica
SLU 76	-1.67	-33176	1550.84	53195	7976.62	5.143	Si
SLU 76	1.32	-14661	-6104.93	23508	7227.61	1.184	Si
SLU 81	-1.67	-33400	1434.13	53554	7928.49	5.528	Si
SLU 81	1.32	-14709	-6050.52	23585	7241.68	1.197	Si
SLU 82	-1.67	-33836	1529.37	54253	7830.79	5.12	Si
SLU 82	1.32	-14998	-6208.27	24047	7324.7	1.18	Si
SLU 80	-1.67	-33374	1516.63	53513	7934.05	5.231	Si
SLU 80	1.32	-14685	-6086.72	23547	7234.77	1.189	Si
SLU 78	-1.67	-33581	1526.84	53844	7888.54	5.167	Si
SLU 78	1.32	-14799	-6136.24	23729	7267.82	1.184	Si
SLU 75	-1.67	-33092	1497.56	53061	7994.34	5.338	Si
SLU 75	1.32	-14582	-6049.28	23381	7204.47	1.191	Si
SLU 73	-1.67	-32687	1521.57	52412	8077.02	5.308	Si
SLU 73	1.32	-14444	-6017.96	23160	7163.44	1.19	Si
SLU 84	-1.67	-34324	1558.64	55037	7715.08	4.95	Si
SLU 84	1.32	-15214	-6295.23	24395	7385.6	1.173	Si
SLU 77	-1.67	-33145	1431.6	53145	7983.2	5.576	Si
SLU 77	1.32	-14511	-5978.49	23267	7183.24	1.202	Si
SLU 83	-1.67	-33889	1463.41	54338	7818.58	5.343	Si
SLU 83	1.32	-14926	-6137.48	23932	7304.28	1.19	Si

Verifica a pressoflessione nel piano secondo D.M. 17-01-18 NTC §7.8.2.2.1 in combinazioni sismiche, γM = 2

Comb.	Quota	N	M	σ0	Mu	c.s.	Verifica
SLV 3	-1.67	-31874	2158.76	51108	12848.98	5.952	Si
SLV 3	1.32	-13418	-5588.61	21514	7660.88	1.371	Si
SLV 4	-1.67	-31874	2158.76	51108	12848.98	5.952	Si
SLV 4	1.32	-13418	-5588.61	21514	7660.88	1.371	Si
SLV 12	-1.67	-29556	2714.14	47391	12537.58	4.619	Si
SLV 12	1.32	-14924	-7490.03	23929	8316.43	1.11	Si
SLV 8	-1.67	-33614	3094.17	53898	13018.53	4.207	Si
SLV 8	1.32	-16146	-7796.16	25889	8818.07	1.131	Si
SLV 15	-1.67	-18348	891.99	29420	9653.17	10.822	Si
SLV 15	1.32	-9344	-4568.18	14982	5680.92	1.244	Si
SLV 11	-1.67	-29556	2714.14	47391	12537.58	4.619	Si
SLV 11	1.32	-14924	-7490.03	23929	8316.43	1.11	Si
SLV 7	-1.67	-33614	3094.17	53898	13018.53	4.207	Si
SLV 7	1.32	-16146	-7796.16	25889	8818.07	1.131	Si
SLV 13	-1.67	-12799	-289.82	20522	7379.47	25.462	Si
SLV 13	1.32	-5783	-2369.85	9272	3703.15	1.563	Si
SLV 14	-1.67	-12799	-289.82	20522	7379.47	25.462	Si
SLV 14	1.32	-5783	-2369.85	9272	3703.15	1.563	Si
SLV 16	-1.67	-18348	891.99	29420	9653.17	10.822	Si
SLV 16	1.32	-9344	-4568.18	14982	5680.92	1.244	Si

Verifica a taglio nel piano secondo D.M. 17-01-18 (N.T.C.) §7.8.2.2.2 con rottura per scorrimento in combinazioni non sismiche, γM = 3

Comb.	Quota	N	V par	M	σ0	σN	l'	fvd	Vt scorr.	Vt fess.diag.	Vt,lim	c.s.	Verifica
SLU 81	-1.67	-33400	5652	1434.13		53554	1.3859	10833	6756			1.2	Si
SLU 81	1.32	-14709	6034	-6050.52		38689	0.8448	10714	4073			0.68	No, Vu<V
SLU 77	-1.67	-33145	5586	1431.6		53145	1.3859	10833	6756			1.21	Si
SLU 77	1.32	-14511	6008	-5978.49		38257	0.8429	10657	4042			0.67	No, Vu<V
SLU 76	-1.67	-33176	5941	1550.84		53195	1.3859	10833	6756			1.14	Si
SLU 76	1.32	-14661	6161	-6104.93		39269	0.8297	10791	4029			0.65	No, Vu<V
SLU 80	-1.67	-33374	5822	1516.63		53513	1.3859	10833	6756			1.16	Si
SLU 80	1.32	-14685	6139	-6086.72		39061	0.8355	10764	4047			0.66	No, Vu<V
SLU 78	-1.67	-33581	5861	1526.84		53844	1.3859	10833	6756			1.15	Si
SLU 78	1.32	-14799	6193	-6136.24		39386	0.835	10807	4061			0.66	No, Vu<V
SLU 75	-1.67	-33092	5797	1497.56		53061	1.3859	10833	6756			1.17	Si
SLU 75	1.32	-14582	6091	-6049.28		38837	0.8344	10734	4030			0.66	No, Vu<V
SLU 84	-1.67	-34324	5990	1558.64		55037	1.3859	10833	6756			1.13	Si
SLU 84	1.32	-15214	6321	-6295.23		40366	0.8376	10833	4083			0.65	No, Vu<V
SLU 82	-1.67	-33836	5926	1529.37		54253	1.3859	10833	6756			1.14	Si
SLU 82	1.32	-14998	6219	-6208.27		39817	0.837	10833	4081			0.66	No, Vu<V
SLU 73	-1.67	-32687	5877	1521.57		52412	1.3859	10833	6756			1.15	Si
SLU 73	1.32	-14444	6059	-6017.96		38720	0.829	10718	3998			0.66	No, Vu<V
SLU 83	-1.67	-33889	5716	1463.41		54338	1.3859	10833	6756			1.18	Si
SLU 83	1.32	-14926	6135	-6137.48		39239	0.8453	10787	4103			0.67	No, Vu<V

Verifica a taglio nel piano secondo D.M. 17-01-18 (N.T.C.) §7.8.2.2.2 con rottura per scorrimento in combinazioni sismiche, γM = 2

Comb.	Quota	N	V par	M	σ0	σN	l'	fvd	Vt scorr.	Vt fess.diag.	Vt,lim	c.s.	Verifica
SLV 13	-1.67	-12799	2121	-289.82		20522	1.3859	12438	7757			3.66	Si
SLV 13	1.32	-5783	3772	-2369.85		15128	0.8494	11359	4342			1.15	Si

Comb.	Quota	N	V par	M	σ0	σN	l'	fvd	Vt scorr.	Vt fess.diag.	Vt,lim	c.s.	Verifica
SLV 12	-1.67	-29556	10188	2714.14		47391	1.3859	16250	10135			0.99	No, Vu<V
SLV 12	1.32	-14924	6959	-7490.03		57853	0.5733	16250	4192			0.6	No, Vu<V
SLV 8	-1.67	-33614	10067	3094.17		53898	1.3859	16250	10135			1.01	Si
SLV 8	1.32	-16146	6582	-7796.16		56922	0.6304	16250	4609			0.7	No, Vu<V
SLV 3	-1.67	-31874	5506	2158.76		51108	1.3859	16250	10135			1.84	Si
SLV 3	1.32	-13418	4189	-5588.61		35952	0.8294	15524	5794			1.38	Si
SLV 14	-1.67	-12799	2121	-289.82		20522	1.3859	12438	7757			3.66	Si
SLV 14	1.32	-5783	3772	-2369.85		15128	0.8494	11359	4342			1.15	Si
SLV 4	-1.67	-31874	5506	2158.76		51108	1.3859	16250	10135			1.84	Si
SLV 4	1.32	-13418	4189	-5588.61		35952	0.8294	15524	5794			1.38	Si
SLV 7	-1.67	-33614	10067	3094.17		53898	1.3859	16250	10135			1.01	Si
SLV 7	1.32	-16146	6582	-7796.16		56922	0.6304	16250	4609			0.7	No, Vu<V
SLV 11	-1.67	-29556	10188	2714.14		47391	1.3859	16250	10135			0.99	No, Vu<V
SLV 11	1.32	-14924	6959	-7490.03		57853	0.5733	16250	4192			0.6	No, Vu<V
SLV 16	-1.67	-18348	5909	891.99		29420	1.3859	14217	8867			1.5	Si
SLV 16	1.32	-9344	5446	-4568.18		33918	0.6122	15117	4164			0.76	No, Vu<V
SLV 15	-1.67	-18348	5909	891.99		29420	1.3859	14217	8867			1.5	Si
SLV 15	1.32	-9344	5446	-4568.18		33918	0.6122	15117	4164			0.76	No, Vu<V

Verifica a pressoflessione fuori piano D.M. 17-01-18 (N.T.C.)

quota -0.175 Wa 0.08 denominatore 8 γM = 2

Comb.	fd	Sa	σ0	N	M	Mc	Coeff.s.	Verifica
SLV 9	143750	0.24	18580	-11588	102.17	2210.81	21.64	Si
SLV 10	143750	0.24	18580	-11588	102.17	2210.81	21.64	Si
SLV 13	143750	0.24	19319	-12049	102.17	2282.34	22.34	Si
SLV 14	143750	0.24	19319	-12049	102.17	2282.34	22.34	Si
SLV 6	143750	0.24	23488	-14649	102.17	2662.36	26.06	Si
SLV 5	143750	0.24	23488	-14649	102.17	2662.36	26.06	Si
SLV 16	143750	0.24	24860	-15505	102.17	2778.75	27.2	Si
SLV 15	143750	0.24	24860	-15505	102.17	2778.75	27.2	Si
SLV 1	143750	0.24	35678	-22251	102.17	3544.64	34.69	Si
SLV 2	143750	0.24	35678	-22251	102.17	3544.64	34.69	Si

Verifica dei meccanismi locali di collasso con analisi cinematica lineare

forza di aggancio al piano = 0 quota mezzeria = -0.175 Wa = 0.08 Ta = 0.0332

Comb.	N top	N base	V orto	α0	M*	e*	a0*	aLim	Verifica
SLV 3	-13418	-31874	245	0.067	1629.4	0.953	1.02756	3.6078	No
SLV 4	-13418	-31874	245	0.067	1629.4	0.953	1.02756	3.6078	No
SLV 1	-9857	-26325	214	0.068	1268.1	0.941	1.0443	3.6078	No
SLV 2	-9857	-26325	214	0.068	1268.1	0.941	1.0443	3.6078	No
SLV 13	-5783	-12799	-191	0.067	856.9	0.92	1.05285	3.6078	No
SLV 14	-5783	-12799	-191	0.067	856.9	0.92	1.05285	3.6078	No
SLV 15	-9344	-18348	-159	0.072	1216.1	0.939	1.11782	3.6078	No
SLV 16	-9344	-18348	-159	0.072	1216.1	0.939	1.11782	3.6078	No
SLV 7	-16146	-33614	140	0.074	1906.7	0.959	1.12862	3.42705	No
SLV 8	-16146	-33614	140	0.074	1906.7	0.959	1.12862	3.42705	No

Tabella dei coefficienti di sicurezza minimi

Stato limite	Coeff.s.	Comb.	Verifica
PF_SLU	1.173	SLU 84	Si
V_SLU	0.646	SLU 84	No
PF_SLV	1.11	SLV 11	Si
V_SLV	0.602	SLV 11	No
PFFP_SLV	21.639	SLV 9	Si
R_SLV	0.285	SLV 3	No

Maschio 36

Verifiche condotte secondo D.M. 17-01-18 (N.T.C.)

Dati geometrici

X ini.	Y ini.	X fin.	Y fin.	Quota i.	Quota.s	l	Sp.	h netta	h ini.	h fin.	a	a.s.,sx	a.s.,dx
-9.728	2.201	-9.728	6.34	L1	L3	4.139	0.3	2.99	2.99	2.99			

Caratteristiche del materiale

(Circolare 7 21-01-19 C8.5.I) Muratura in mattoni pieni e malta di calce LC2_Corti

fb	fk	fvk0	fmedio	τ0	fv0	μ	ϕ	fv,lim	E	G	FC
600000			345000	9000	20000	0.58	0.77	32500	320000000	128000000	1.2

Verifica a pressoflessione nel piano secondo D.M. 17-01-18 NTC §7.8.2.2.1 in combinazioni non sismiche, γM = 3

Comb.	Quota	N	M	σ0	Mu	c.s.	Verifica
SLU 82	-1.67	-68632	-9967.68	55276	45650.5	4.58	Si
SLU 82	0.53	-61747	-4268.38	49730	49769.48	11.66	Si
SLU 83	-1.67	-69586	-10257.64	56044	44926.79	4.38	Si
SLU 83	0.53	-62701	-4480.62	50499	49314.27	11.006	Si
SLU 79	-1.67	-67751	-9954.48	54566	46285.66	4.65	Si
SLU 79	0.53	-61003	-4333.47	49131	50098.43	11.561	Si
SLU 75	-1.67	-67297	-9753.59	54200	46601.13	4.778	Si
SLU 75	0.53	-60556	-4169.81	48771	50285.02	12.059	Si
SLU 78	-1.67	-68228	-10018.98	54950	45945.84	4.586	Si
SLU 78	0.53	-61490	-4350.92	49524	49885.48	11.466	Si
SLU 77	-1.67	-68251	-10043.55	54968	45929.55	4.573	Si
SLU 77	0.53	-61511	-4382.04	49540	49876.31	11.382	Si
SLU 74	-1.67	-67319	-9778.15	54218	46585.7	4.764	Si
SLU 74	0.53	-60576	-4200.93	48788	50276.63	11.968	Si
SLU 84	-1.67	-69564	-10233.08	56026	44944.3	4.392	Si

Comb.	Quota	N	M	σ0	Mu	c.s.	Verifica
SLU 84	0.53	-62681	-4449.49	50483	49324.43	11.085	Si
SLU 80	-1.67	-67729	-9929.91	54548	46301.49	4.663	Si
SLU 80	0.53	-60982	-4302.34	49115	50107.17	11.646	Si
SLU 81	-1.67	-68655	-9992.25	55294	45633.84	4.567	Si
SLU 81	0.53	-61767	-4299.51	49747	49760.1	11.573	Si

Verifica a pressoflessione nel piano secondo D.M. 17-01-18 NTC §7.8.2.2.1 in combinazioni sismiche, γM = 2

Comb.	Quota	N	M	σ0	Mu	c.s.	Verifica
SLV 12	-1.67	-47364	27004	38147	67414.88	2.496	Si
SLV 12	0.53	-43924	13795.59	35376	64579.49	4.681	Si
SLV 6	-1.67	-45057	-39667.05	36288	65548.63	1.652	Si
SLV 6	0.53	-38493	-18848.48	31002	59445.63	3.154	Si
SLV 11	-1.67	-47364	27004	38147	67414.88	2.496	Si
SLV 11	0.53	-43924	13795.59	35376	64579.49	4.681	Si
SLV 8	-1.67	-40463	29485.73	32588	61400.66	2.082	Si
SLV 8	0.53	-40037	12652.39	32246	60987.35	4.82	Si
SLV 14	-1.67	-58403	-20840.65	47037	74332.54	3.567	Si
SLV 14	0.53	-47455	-5346.24	38220	67485.29	12.623	Si
SLV 13	-1.67	-58403	-20840.65	47037	74332.54	3.567	Si
SLV 13	0.53	-47455	-5346.24	38220	67485.29	12.623	Si
SLV 7	-1.67	-40463	29485.73	32588	61400.66	2.082	Si
SLV 7	0.53	-40037	12652.39	32246	60987.35	4.82	Si
SLV 10	-1.67	-51959	-42148.77	41847	70697.86	1.677	Si
SLV 10	0.53	-42380	-17705.28	34132	63201.54	3.57	Si
SLV 5	-1.67	-45057	-39667.05	36288	65548.63	1.652	Si
SLV 5	0.53	-38493	-18848.48	31002	59445.63	3.154	Si
SLV 9	-1.67	-51959	-42148.77	41847	70697.86	1.677	Si
SLV 9	0.53	-42380	-17705.28	34132	63201.54	3.57	Si

Verifica a taglio nel piano secondo D.M. 17-01-18 (N.T.C.) §7.8.2.2.2 con rottura per scorrimento in combinazioni non sismiche, γM = 3

Comb.	Quota	N	V par	M	σ0	σN	I'	fvd	Vt scorr.	Vt fess.diag.	Vt,lim	c.s.	Verifica
SLU 77	-1.67	-68251	1550	-10043.55		54968	4.1388	10833	13451			8.68	Si
SLU 77	0.53	-61511	-4235	-4382.04		49540	4.1388	10833	13451			3.18	Si
SLU 80	-1.67	-67729	1524	-9929.91		54548	4.1388	10833	13451			8.83	Si
SLU 80	0.53	-60982	-4207	-4302.34		49115	4.1388	10833	13451			3.2	Si
SLU 82	-1.67	-68632	1561	-9967.68		55276	4.1388	10833	13451			8.62	Si
SLU 82	0.53	-61747	-4212	-4268.38		49730	4.1388	10833	13451			3.19	Si
SLU 75	-1.67	-67297	1520	-9753.59		54200	4.1388	10833	13451			8.85	Si
SLU 75	0.53	-60556	-4138	-4169.81		48771	4.1388	10833	13451			3.25	Si
SLU 81	-1.67	-68655	1569	-9992.25		55294	4.1388	10833	13451			8.57	Si
SLU 81	0.53	-61767	-4214	-4299.51		49747	4.1388	10833	13451			3.19	Si
SLU 84	-1.67	-69564	1584	-10233.08		56026	4.1388	10833	13451			8.49	Si
SLU 84	0.53	-62681	-4307	-4449.49		50483	4.1388	10833	13451			3.12	Si
SLU 79	-1.67	-67751	1532	-9954.48		54566	4.1388	10833	13451			8.78	Si
SLU 79	0.53	-61003	-4208	-4333.47		49131	4.1388	10833	13451			3.2	Si
SLU 74	-1.67	-67319	1527	-9778.15		54218	4.1388	10833	13451			8.81	Si
SLU 74	0.53	-60576	-4140	-4200.93		48788	4.1388	10833	13451			3.25	Si
SLU 83	-1.67	-69586	1592	-10257.64		56044	4.1388	10833	13451			8.45	Si
SLU 83	0.53	-62701	-4309	-4480.62		50499	4.1388	10833	13451			3.12	Si
SLU 78	-1.67	-68228	1543	-10018.98		54950	4.1388	10833	13451			8.72	Si
SLU 78	0.53	-61490	-4234	-4350.92		49524	4.1388	10833	13451			3.18	Si

Verifica a taglio nel piano secondo D.M. 17-01-18 (N.T.C.) §7.8.2.2.2 con rottura per scorrimento in combinazioni sismiche, γM = 2

Comb.	Quota	N	V par	M	σ0	σN	I'	fvd	Vt scorr.	Vt fess.diag.	Vt,lim	c.s.	Verifica
SLV 11	-1.67	-47364	20724	27004		38147	4.1388	15963	19820			0.96	No, Vu<V
SLV 11	0.53	-43924	13868	13795.59		35376	4.1388	15409	19132			1.38	Si
SLV 8	-1.67	-40463	20401	29485.73		33534	4.022	15040	18148			0.89	No, Vu<V
SLV 8	0.53	-40037	12895	12652.39		32246	4.1388	14782	18354			1.42	Si
SLV 1	-1.67	-35397	-5394	-12568.23		28508	4.1388	14035	17426			3.23	Si
SLV 1	0.53	-34498	-9242	-9156.91		27785	4.1388	13890	17247			1.87	Si
SLV 9	-1.67	-51959	-18381	-42148.77		45885	3.7746	16250	18401			1	Si
SLV 9	0.53	-42380	-18442	-17705.28		34132	4.1388	15160	18823			1.02	Si
SLV 2	-1.67	-35397	-5394	-12568.23		28508	4.1388	14035	17426			3.23	Si
SLV 2	0.53	-34498	-9242	-9156.91		27785	4.1388	13890	17247			1.87	Si
SLV 12	-1.67	-47364	20724	27004		38147	4.1388	15963	19820			0.96	No, Vu<V
SLV 12	0.53	-43924	13868	13795.59		35376	4.1388	15409	19132			1.38	Si
SLV 10	-1.67	-51959	-18381	-42148.77		45885	3.7746	16250	18401			1	Si
SLV 10	0.53	-42380	-18442	-17705.28		34132	4.1388	15160	18823			1.02	Si
SLV 6	-1.67	-45057	-18704	-39667.05		42105	3.567	16250	17389			0.93	No, Vu<V
SLV 6	0.53	-38493	-19415	-18848.48		31002	4.1388	14534	18045			0.93	No, Vu<V
SLV 7	-1.67	-40463	20401	29485.73		33534	4.022	15040	18148			0.89	No, Vu<V
SLV 7	0.53	-40037	12895	12652.39		32246	4.1388	14782	18354			1.42	Si
SLV 5	-1.67	-45057	-18704	-39667.05		42105	3.567	16250	17389			0.93	No, Vu<V
SLV 5	0.53	-38493	-19415	-18848.48		31002	4.1388	14534	18045			0.93	No, Vu<V

Verifica a pressoflessione fuori piano D.M. 17-01-18 (N.T.C.)

quota -0.175 Wa 0.05 denominatore 8 γM = 2

Comb.	fd	Sa	σ0	N	M	Mc	Coeff.s.	Verifica
SLV 1	143750	0.24	28563	-35465	203.4	4076.16	20.04	Si
SLV 2	143750	0.24	28563	-35465	203.4	4076.16	20.04	Si
SLV 3	143750	0.24	28938	-35931	203.4	4113.16	20.22	Si
SLV 4	143750	0.24	28938	-35931	203.4	4113.16	20.22	Si
SLV 5	143750	0.24	32725	-40633	203.4	4462.54	21.94	Si
SLV 6	143750	0.24	32725	-40633	203.4	4462.54	21.94	Si
SLV 8	143750	0.24	33976	-42186	203.4	4568.33	22.46	Si
SLV 7	143750	0.24	33976	-42186	203.4	4568.33	22.46	Si
SLV 10	143750	0.24	36669	-45529	203.4	4779.84	23.5	Si
SLV 9	143750	0.24	36669	-45529	203.4	4779.84	23.5	Si

Verifica dei meccanismi locali di collasso con analisi cinematica lineare

forza di aggancio al piano = 0 quota mezzeria = -0.175 Wa = 0.05 Ta = 0.0498

Comb.	N top	N base	V orto	α0	M*	e*	a0*	aLim	Verifica
SLV 14	-43471	-58403	250	0.048	4948.5	0.968	0.72699	4.54426	No
SLV 13	-43471	-58403	250	0.048	4948.5	0.968	0.72699	4.54426	No
SLV 16	-43734	-57024	176	0.05	4975.3	0.968	0.75043	4.54426	No
SLV 15	-43734	-57024	176	0.05	4975.3	0.968	0.75043	4.54426	No
SLV 2	-30536	-35397	161	0.05	3632.5	0.957	0.76463	4.54426	No
SLV 1	-30536	-35397	161	0.05	3632.5	0.957	0.76463	4.54426	No
SLV 9	-38637	-51959	304	0.047	4456.5	0.965	0.70684	4.18901	No
SLV 10	-38637	-51959	304	0.047	4456.5	0.965	0.70684	4.18901	No
SLV 5	-34756	-45057	277	0.047	4061.7	0.962	0.71471	4.18901	No
SLV 6	-34756	-45057	277	0.047	4061.7	0.962	0.71471	4.18901	No

Tabella dei coefficienti di sicurezza minimi

Stato limite	Coeff.s.	Comb.	Verifica
PF_SLU	4.38	SLU 83	Si
V_SLU	3.122	SLU 83	Si
PF_SLV	1.652	SLV 5	Si
V_SLV	0.89	SLV 7	No
PFFP_SLV	20.04	SLV 1	Si
R_SLV	0.16	SLV 13	No

Maschio 37

Verifiche condotte secondo D.M. 17-01-18 (N.T.C.)

Dati geometrici

X ini.	Y ini.	X fin.	Y fin.	Quota i.	Quota.s	l	Sp.	h netta	h ini.	h fin.	a	a.s.,sx	a.s.,dx
-7.842	-4.714	-11.01	-4.714	L1	L3	3.168	0.45	2.99	2.99	2.99			

Caratteristiche del materiale

(Circolare 7 21-01-19 C8.5.I) Muratura in mattoni pieni e malta di calce LC2_Corti

fb	fk	fvk0	fmedio	τ0	fv0	μ	ϕ	fv,lim	E	G	FC
600000			345000	9000	20000	0.58	0.77	32500	320000000	128000000	1.2

Verifica a pressoflessione nel piano secondo D.M. 17-01-18 NTC §7.8.2.2.1 in combinazioni non sismiche, γM = 3

Comb.	Quota	N	M	σ0	Mu	c.s.	Verifica
SLU 68	-1.67	-35234	6236.51	24715	38878.08	6.234	Si
SLU 68	1.32	-23893	13937.95	16760	30060.46	2.157	Si
SLU 55	-1.67	-35909	6535	25188	39291.85	6.013	Si
SLU 55	1.32	-24484	14330.76	17175	30606.69	2.136	Si
SLU 73	-1.67	-37643	7060.66	26404	40298.86	5.708	Si
SLU 73	1.32	-26238	15051.65	18405	32171.36	2.137	Si
SLU 2	-1.67	-25362	4615.94	17790	31400.42	6.803	Si
SLU 2	1.32	-16769	10394.19	11763	22727.29	2.187	Si
SLU 52	-1.67	-35627	6542.46	24990	39120.43	5.979	Si
SLU 52	1.32	-24258	14250.65	17016	30398.42	2.133	Si
SLU 76	-1.67	-37924	7053.2	26602	40454.79	5.736	Si
SLU 76	1.32	-26465	15131.76	18564	32367.39	2.139	Si
SLU 5	-1.67	-25644	4608.48	17988	31650.75	6.868	Si
SLU 5	1.32	-16996	10474.3	11922	22981.85	2.194	Si
SLU 44	-1.67	-32937	5725.77	23103	37375.11	6.528	Si
SLU 44	1.32	-21686	13056.84	15212	27936.66	2.14	Si
SLU 47	-1.67	-33219	5718.31	23301	37567.21	6.57	Si
SLU 47	1.32	-21913	13136.95	15371	28160.82	2.144	Si
SLU 65	-1.67	-34952	6243.96	24517	38701.48	6.198	Si
SLU 65	1.32	-23667	13857.84	16601	29848.53	2.154	Si

Verifica a pressoflessione nel piano secondo D.M. 17-01-18 NTC §7.8.2.2.1 in combinazioni sismiche, γM = 2

Comb.	Quota	N	M	σ0	Mu	c.s.	Verifica
SLV 16	-1.67	-34177	-1318	23973	43515.21	33.016	Si
SLV 16	1.32	-26427	18976.96	18537	35509.76	1.871	Si
SLV 12	-1.67	-8880	1673.21	6229	13349.27	7.978	Si
SLV 12	1.32	-1790	11206.06	0	0	0	No, e>l/2
SLV 4	-1.67	-9373	9871.22	6575	14048.56	1.423	Si
SLV 4	1.32	-224	597.76	0	0	0	No, e>l/2
SLV 7	-1.67	-1439	5029.98	0	0	0	No, e>l/2
SLV 7	1.32	6071	5692.3	0	0	0	No, Trazione
SLV 14	-1.67	-48419	-525.14	33963	55377.77	105.454	Si
SLV 14	1.32	-39683	20123.98	27836	48538.95	2.412	Si
SLV 13	-1.67	-48419	-525.14	33963	55377.77	105.454	Si
SLV 13	1.32	-39683	20123.98	27836	48538.95	2.412	Si
SLV 3	-1.67	-9373	9871.22	6575	14048.56	1.423	Si
SLV 3	1.32	-224	597.76	0	0	0	No, e>l/2
SLV 11	-1.67	-8880	1673.21	6229	13349.27	7.978	Si
SLV 11	1.32	-1790	11206.06	0	0	0	No, e>l/2
SLV 8	-1.67	-1439	5029.98	0	0	0	No, e>l/2
SLV 8	1.32	6071	5692.3	0	0	0	No, Trazione
SLV 15	-1.67	-34177	-1318	23973	43515.21	33.016	Si
SLV 15	1.32	-26427	18976.96	18537	35509.76	1.871	Si

Verifica a taglio nel piano secondo D.M. 17-01-18 (N.T.C.) §7.8.2.2.2 con rottura per scorrimento in combinazioni non sismiche, γM = 3

Comb.	Quota	N	V par	M	σ0	σN	l'	fvd	Vt scorr.	Vt fess.diag.	Vt,lim	c.s.	Verifica
SLU 80	-1.67	-39082	-7883	6916.02		27414	3.168	9211	13131			1.67	Si
SLU 80	1.32	-27445	-3614	14970.56		19575	3.1156	8166	11448			3.17	Si

Comb.	Quota	N	V par	M	σ0	σN	l'	fvd	Vt scorr.	Vt fess.diag.	Vt,lim	c.s.	Verifica
SLU 77	-1.67	-40466	-7979	6770.31		28385	3.168	9340	13316			1.67	Si
SLU 77	1.32	-28644	-3512	14652.68		20093	3.168	8235	11739			3.34	Si
SLU 76	-1.67	-37924	-7782	7053.2		26602	3.168	9102	12977			1.67	Si
SLU 76	1.32	-26465	-3640	15131.76		19366	3.0368	8138	11121			3.06	Si
SLU 82	-1.67	-39671	-8087	7280.95		27827	3.168	9266	13210			1.63	Si
SLU 82	1.32	-28094	-3649	15321.98		20036	3.1159	8227	11536			3.16	Si
SLU 78	-1.67	-39153	-7910	6964.89		27464	3.168	9217	13140			1.66	Si
SLU 78	1.32	-27514	-3623	15014.64		19629	3.1149	8173	11456			3.16	Si
SLU 84	-1.67	-39953	-8142	7273.49		28025	3.168	9292	13247			1.63	Si
SLU 84	1.32	-28320	-3697	15402.08		20168	3.1205	8245	11577			3.13	Si
SLU 75	-1.67	-38871	-7855	6972.35		27266	3.168	9191	13103			1.67	Si
SLU 75	1.32	-27288	-3575	14934.53		19497	3.1102	8155	11414			3.19	Si
SLU 79	-1.67	-40395	-7952	6721.44		28335	3.168	9334	13306			1.67	Si
SLU 79	1.32	-28575	-3504	14608.6		20044	3.168	8228	11730			3.35	Si
SLU 81	-1.67	-40985	-8157	7086.37		28749	3.168	9389	13385			1.64	Si
SLU 81	1.32	-29224	-3539	14960.02		20499	3.168	8289	11817			3.34	Si
SLU 83	-1.67	-41266	-8211	7078.91		28946	3.168	9415	13422			1.63	Si
SLU 83	1.32	-29451	-3587	15040.12		20658	3.168	8310	11847			3.3	Si

Verifica a taglio nel piano secondo D.M. 17-01-18 (N.T.C.) §7.8.2.2.2 con rottura per scorrimento in combinazioni sismiche, γM = 2

Comb.	Quota	N	V par	M	σ0	σN	l'	fvd	Vt scorr.	Vt fess.diag.	Vt,lim	c.s.	Verifica
SLV 16	-1.67	-34177	-11340	-1318		23973	3.168	13128	18716			1.65	Si
SLV 16	1.32	-26427	-10453	18976.96		22606	2.5978	12855	15027			1.44	Si
SLV 11	-1.67	-8880	-2096	1673.21		6229	3.168	9579	13656			6.52	Si
SLV 11	1.32	-1790	-5613	11206.06		0	0	8333	0			0	No, Vu<V
SLV 7	-1.67	-1439	2395	5029.98		0	0	8333	0			0	No, Vu<V
SLV 7	1.32	6071	-951	5692.3		0	0	8333	0			0	No, Vu<V
SLV 14	-1.67	-48419	-14772	-525.14		33963	3.168	15126	21564			1.46	Si
SLV 14	1.32	-39683	-9939	20123.98		27836	3.168	13900	19817			1.99	Si
SLV 8	-1.67	-1439	2395	5029.98		0	0	8333	0			0	No, Vu<V
SLV 8	1.32	6071	-951	5692.3		0	0	8333	0			0	No, Vu<V
SLV 4	-1.67	-9373	3630	9871.22		13078	1.5927	10949	7847			2.16	Si
SLV 4	1.32	-224	5088	597.76		0	0	8333	0			0	No, Vu<V
SLV 3	-1.67	-9373	3630	9871.22		13078	1.5927	10949	7847			2.16	Si
SLV 3	1.32	-224	5088	597.76		0	0	8333	0			0	No, Vu<V
SLV 15	-1.67	-34177	-11340	-1318		23973	3.168	13128	18716			1.65	Si
SLV 15	1.32	-26427	-10453	18976.96		22606	2.5978	12855	15027			1.44	Si
SLV 13	-1.67	-48419	-14772	-525.14		33963	3.168	15126	21564			1.46	Si
SLV 13	1.32	-39683	-9939	20123.98		27836	3.168	13900	19817			1.99	Si
SLV 12	-1.67	-8880	-2096	1673.21		6229	3.168	9579	13656			6.52	Si
SLV 12	1.32	-1790	-5613	11206.06		0	0	8333	0			0	No, Vu<V

Verifica a pressoflessione fuori piano D.M. 17-01-18 (N.T.C.)

quota -0.175 Wa 0.08 denominatore 8 γM = 2

Comb.	fd	Sa	σ0	N	M	Mc	Coeff.s.	Verifica
SLV 7	143750	0.24	0	1006	233.54	0	0	No, Trazione
SLV 8	143750	0.24	0	1006	233.54	0	0	No, Trazione
SLV 4	143750	0.24	2559	-3648	233.54	803.51	3.44	Si
SLV 3	143750	0.24	2559	-3648	233.54	803.51	3.44	Si
SLV 12	143750	0.24	5171	-7372	233.54	1588.41	6.8	Si
SLV 11	143750	0.24	5171	-7372	233.54	1588.41	6.8	Si
SLV 1	143750	0.24	11233	-16014	233.54	3271.86	14.01	Si
SLV 2	143750	0.24	11233	-16014	233.54	3271.86	14.01	Si
SLV 16	143750	0.24	22147	-31572	233.54	5816.24	24.9	Si
SLV 15	143750	0.24	22147	-31572	233.54	5816.24	24.9	Si

Verifica dei meccanismi locali di collasso con analisi cinematica lineare

forza di aggancio al piano = 0 quota mezzeria = -0.175 Wa = 0.08 Ta = 0.0332

Comb.	N top	N base	V orto	α0	M*	e*	a0*	aLim	Verifica
SLV 7	6071	-1439	-537	0	0	0	0	3.42705	No, Trazione
SLV 8	6071	-1439	-537	0	0	0	0	3.42705	No, Trazione
SLV 10	-45978	-56353	1058	0.06	5281.3	0.966	0.90022	3.42705	No
SLV 9	-45978	-56353	1058	0.06	5281.3	0.966	0.90022	3.42705	No
SLV 6	-38117	-48912	894	0.061	4481.5	0.96	0.92072	3.42705	No
SLV 5	-38117	-48912	894	0.061	4481.5	0.96	0.92072	3.42705	No
SLV 14	-39683	-48419	748	0.065	4640.8	0.961	0.97811	3.6078	No
SLV 13	-39683	-48419	748	0.065	4640.8	0.961	0.97811	3.6078	No
SLV 11	-1790	-8880	-373	0.06	870.2	0.902	0.9704	3.42705	No
SLV 12	-1790	-8880	-373	0.06	870.2	0.902	0.9704	3.42705	No

Tabella dei coefficienti di sicurezza minimi

Stato limite	Coeff.s.	Comb.	Verifica
PF_SLU	2.133	SLU 52	Si
V_SLU	1.627	SLU 84	Si
PF_SLV	0	SLV 8	No
V_SLV	0	SLV 3	No
PFFP_SLV	0	SLV 8	No
R_SLV	0	SLV 8	No

Maschio 38

Verifiche condotte secondo D.M. 17-01-18 (N.T.C.)

Dati geometrici

X ini.	Y ini.	X fin.	Y fin.	Quota i.	Quota.s	l	Sp.	h netta	h ini.	h fin.	a	a.s.,sx	a.s.,dx
-10.782	-3.288	-10.472	-3.288	L1	L3	0.31	0.45	2.99	2.99	2.99			

Caratteristiche del materiale

(Circolare 7 21-01-19 C8.5.I) Muratura in mattoni pieni e malta di calce LC2_Corti

fb	fk	fvk0	fmedio	τ0	fv0	μ	ϕ	fv,lim	E	G	FC
600000			345000	9000	20000	0.58	0.77	32500	320000000	128000000	1.2

Verifica a pressoflessione nel piano secondo D.M. 17-01-18 NTC §7.8.2.2.1 in combinazioni non sismiche, γM = 3

Comb.	Quota	N	M	σ0	Mu	c.s.	Verifica
SLU 76	-1.67	-6498	-273.9	46542	432.08	1.578	Si
SLU 76	0.38	-2947	-76.66	21105	338.67	4.418	Si
SLU 78	-1.67	-6533	-274.04	46792	431.29	1.574	Si
SLU 78	0.38	-2966	-77.91	21246	340.14	4.366	Si
SLU 81	-1.67	-6813	-286.3	48797	423.76	1.48	Si
SLU 81	0.38	-3106	-82.98	22243	350.21	4.22	Si
SLU 75	-1.67	-6526	-274.6	46742	431.45	1.571	Si
SLU 75	0.38	-2962	-77.45	21215	339.82	4.388	Si
SLU 84	-1.67	-6811	-287.28	48787	423.81	1.475	Si
SLU 84	0.38	-3102	-82.24	22221	349.99	4.256	Si
SLU 83	-1.67	-6820	-285.74	48847	423.55	1.482	Si
SLU 83	0.38	-3110	-83.44	22274	350.5	4.201	Si
SLU 82	-1.67	-6804	-287.84	48737	424.02	1.473	Si
SLU 82	0.38	-3098	-81.78	22191	349.69	4.276	Si
SLU 77	-1.67	-6541	-272.5	46852	431.1	1.582	Si
SLU 77	0.38	-2974	-79.1	21298	340.68	4.307	Si
SLU 73	-1.67	-6491	-274.46	46492	432.24	1.575	Si
SLU 73	0.38	-2942	-76.2	21074	338.35	4.44	Si
SLU 74	-1.67	-6534	-273.06	46802	431.26	1.579	Si
SLU 74	0.38	-2969	-78.65	21268	340.37	4.328	Si

Verifica a pressoflessione nel piano secondo D.M. 17-01-18 NTC §7.8.2.2.1 in combinazioni sismiche, γM = 2

Comb.	Quota	N	M	σ0	Mu	c.s.	Verifica
SLV 15	-1.67	-2246	30.25	16087	302.54	10.001	Si
SLV 15	0.38	-945	-70.42	6767	138.44	1.966	Si
SLV 2	-1.67	-6819	-404.29	48838	634.98	1.571	Si
SLV 2	0.38	-3135	-35.41	22455	396.96	11.211	Si
SLV 1	-1.67	-6819	-404.29	48838	634.98	1.571	Si
SLV 1	0.38	-3135	-35.41	22455	396.96	11.211	Si
SLV 14	-1.67	-2727	-13.51	19534	355.44	26.317	Si
SLV 14	0.38	-1147	-64.94	8213	165.93	2.555	Si
SLV 13	-1.67	-2727	-13.51	19534	355.44	26.317	Si
SLV 13	0.38	-1147	-64.94	8213	165.93	2.555	Si
SLV 3	-1.67	-6337	-360.54	45391	617.89	1.714	Si
SLV 3	0.38	-2933	-40.89	21009	376.78	9.213	Si
SLV 6	-1.67	-5948	-318.57	42604	601	1.887	Si
SLV 6	0.38	-2675	-39.35	19158	349.87	8.892	Si
SLV 4	-1.67	-6337	-360.54	45391	617.89	1.714	Si
SLV 4	0.38	-2933	-40.89	21009	376.78	9.213	Si
SLV 5	-1.67	-5948	-318.57	42604	601	1.887	Si
SLV 5	0.38	-2675	-39.35	19158	349.87	8.892	Si
SLV 16	-1.67	-2246	30.25	16087	302.54	10.001	Si
SLV 16	0.38	-945	-70.42	6767	138.44	1.966	Si

Verifica a taglio nel piano secondo D.M. 17-01-18 (N.T.C.) §7.8.2.2.2 con rottura per scorrimento in combinazioni non sismiche, γM = 3

Comb.	Quota	N	V par	M	σ0	σN	I'	fvd	Vt scorr.	Vt fess.diag.	Vt,lim	c.s.	Verifica
SLU 78	-1.67	-6533	-326	-274.04		46792	0.3103	10833	1513			4.64	Si
SLU 78	0.38	-2966	-324	-77.91		21246	0.3103	8388	1171			3.62	Si
SLU 82	-1.67	-6804	-342	-287.84		48737	0.3103	10833	1513			4.42	Si
SLU 82	0.38	-3098	-345	-81.78		22191	0.3103	8514	1189			3.45	Si
SLU 75	-1.67	-6526	-326	-274.6		46742	0.3103	10833	1513			4.63	Si
SLU 75	0.38	-2962	-322	-77.45		21215	0.3103	8384	1171			3.63	Si
SLU 84	-1.67	-6811	-342	-287.28		48787	0.3103	10833	1513			4.42	Si
SLU 84	0.38	-3102	-347	-82.24		22221	0.3103	8518	1189			3.43	Si
SLU 81	-1.67	-6813	-341	-286.3		48797	0.3103	10833	1513			4.44	Si
SLU 81	0.38	-3106	-347	-82.98		22243	0.3103	8521	1190			3.43	Si
SLU 80	-1.67	-6511	-324	-272.32		46632	0.3103	10833	1513			4.67	Si
SLU 80	0.38	-2956	-323	-77.92		21170	0.3103	8378	1170			3.62	Si
SLU 83	-1.67	-6820	-341	-285.74		48847	0.3103	10833	1513			4.44	Si
SLU 83	0.38	-3110	-349	-83.44		22274	0.3103	8525	1190			3.42	Si
SLU 74	-1.67	-6534	-325	-273.06		46802	0.3103	10833	1513			4.66	Si
SLU 74	0.38	-2969	-324	-78.65		21268	0.3103	8391	1172			3.61	Si
SLU 77	-1.67	-6541	-324	-272.5		46852	0.3103	10833	1513			4.66	Si
SLU 77	0.38	-2974	-326	-79.1		21298	0.3103	8395	1172			3.6	Si
SLU 79	-1.67	-6519	-323	-270.78		46692	0.3103	10833	1513			4.69	Si
SLU 79	0.38	-2963	-325	-79.12		21223	0.3103	8385	1171			3.6	Si

Verifica a taglio nel piano secondo D.M. 17-01-18 (N.T.C.) §7.8.2.2.2 con rottura per scorrimento in combinazioni sismiche, γM = 2

Comb.	Quota	N	V par	M	σ0	σN	I'	fvd	Vt scorr.	Vt fess.diag.	Vt,lim	c.s.	Verifica
SLV 15	-1.67	-2246	66	30.25		16087	0.3103	11551	1613			24.49	Si
SLV 15	0.38	-945	-261	-70.42		8684	0.2418	10070	1096			4.2	Si
SLV 6	-1.67	-5948	-449	-318.57		43379	0.3047	16250	2228			4.96	Si
SLV 6	0.38	-2675	-276	-39.35		19158	0.3103	12165	1698			6.15	Si
SLV 14	-1.67	-2727	-27	-13.51		19534	0.3103	12240	1709			63.08	Si
SLV 14	0.38	-1147	-312	-64.94		8623	0.2955	10058	1337			4.28	Si
SLV 2	-1.67	-6819	-510	-404.29		52702	0.2875	16250	2102			4.12	Si
SLV 2	0.38	-3135	-164	-35.41		22455	0.3103	12824	1790			10.9	Si
SLV 10	-1.67	-4721	-304	-201.33		33812	0.3103	15096	2108			6.92	Si
SLV 10	0.38	-2078	-321	-48.2		14885	0.3103	11310	1579			4.92	Si
SLV 16	-1.67	-2246	66	30.25		16087	0.3103	11551	1613			24.49	Si
SLV 16	0.38	-945	-261	-70.42		8684	0.2418	10070	1096			4.2	Si
SLV 5	-1.67	-5948	-449	-318.57		43379	0.3047	16250	2228			4.96	Si

Comb.	Quota	N	V par	M	σ0	σN	l'	fvd	Vt scorr.	Vt fess.diag.	Vt,lim	c.s.	Verifica
SLV 5	0.38	-2675	-276	-39.35		19158	0.3103	12165	1698			6.15	Si
SLV 1	-1.67	-6819	-510	-404.29		52702	0.2875	16250	2102			4.12	Si
SLV 1	0.38	-3135	-164	-35.41		22455	0.3103	12824	1790			10.9	Si
SLV 13	-1.67	-2727	-27	-13.51		19534	0.3103	12240	1709			63.08	Si
SLV 13	0.38	-1147	-312	-64.94		8623	0.2955	10058	1337			4.28	Si
SLV 9	-1.67	-4721	-304	-201.33		33812	0.3103	15096	2108			6.92	Si
SLV 9	0.38	-2078	-321	-48.2		14885	0.3103	11310	1579			4.92	Si

Verifica a pressoflessione fuori piano D.M. 17-01-18 (N.T.C.)

quota -0.175 Wa 0.08 denominatore 8 γM = 2

Comb.	fd	Sa	σ0	N	M	Mc	Coeff.s.	Verifica
SLV 15	143750	0.24	14132	-1973	22.87	392.59	17.17	Si
SLV 16	143750	0.24	14132	-1973	22.87	392.59	17.17	Si
SLV 13	143750	0.24	17348	-2422	22.87	467.58	20.44	Si
SLV 14	143750	0.24	17348	-2422	22.87	467.58	20.44	Si
SLV 11	143750	0.24	20513	-2864	22.87	536.2	23.44	Si
SLV 12	143750	0.24	20513	-2864	22.87	536.2	23.44	Si
SLV 7	143750	0.24	29198	-4076	22.87	698.03	30.52	Si
SLV 8	143750	0.24	29198	-4076	22.87	698.03	30.52	Si
SLV 9	143750	0.24	31232	-4360	22.87	730.33	31.93	Si
SLV 10	143750	0.24	31232	-4360	22.87	730.33	31.93	Si

Verifica dei meccanismi locali di collasso con analisi cinematica lineare

forza di aggancio al piano = 0 quota mezzeria = -0.175 Wa = 0.08 Ta = 0.0332

Comb.	N top	N base	V orto	α0	M*	e*	a0*	aLim	Verifica
SLV 12	-210	-3116	-88	0	87.9	0.897	0	3.42705	No
SLV 11	-210	-3116	-88	0	87.9	0.897	0	3.42705	No
SLV 8	-557	-4344	-95	0.004	119.1	0.893	0.061	3.42705	No
SLV 7	-557	-4344	-95	0.004	119.1	0.893	0.061	3.42705	No
SLV 10	-1252	-4721	94	0.035	187.6	0.918	0.54995	3.42705	No
SLV 9	-1252	-4721	94	0.035	187.6	0.918	0.54995	3.42705	No
SLV 5	-1598	-5948	87	0.046	222.4	0.928	0.71391	3.42705	No
SLV 6	-1598	-5948	87	0.046	222.4	0.928	0.71391	3.42705	No
SLV 13	-483	-2727	39	0.063	112.1	0.89	1.02068	3.6078	No
SLV 14	-483	-2727	39	0.063	112.1	0.89	1.02068	3.6078	No

Tabella dei coefficienti di sicurezza minimi

Stato limite	Coeff.s.	Comb.	Verifica
PF_SLU	1.473	SLU 82	Si
V_SLU	3.415	SLU 83	Si
PF_SLV	1.571	SLV 1	Si
V_SLV	4.125	SLV 1	Si
PFFP_SLV	17.165	SLV 15	Si
R_SLV	0	SLV 11	No

Maschio 39

Verifiche condotte secondo D.M. 17-01-18 (N.T.C.)

Dati geometrici

X ini.	Y ini.	X fin.	Y fin.	Quota i.	Quota.s	l	Sp.	h netta	h ini.	h fin.	a	a.s.,sx	a.s.,dx
-8.172	-3.288	-7.492	-3.288	L1	Z medio 33 cm	0.68	0.45	2	2	2			

Caratteristiche del materiale

(Circolare 7 21-01-19 C8.5.I) Muratura in mattoni pieni e malta di calce LC2_Corti

fb	fk	fvk0	fmedio	τ0	fv0	μ	ϕ	fv,lim	E	G	FC
600000			345000	9000	20000	0.58	0.77	32500	320000000	128000000	1.2

Verifica a pressoflessione nel piano secondo D.M. 17-01-18 NTC §7.8.2.2.1 in combinazioni non sismiche, γM = 3

Comb.	Quota	N	M	σ0	Mu	c.s.	Verifica
SLU 83	-1.67	-13694	-573.6	44762	2097.18	3.656	Si
SLU 83	0.33	-12370	-222.34	40433	2117.83	9.525	Si
SLU 76	-1.67	-13906	-608.11	45452	2089.46	3.436	Si
SLU 76	0.33	-11966	-185.3	39113	2114.6	11.412	Si
SLU 61	-1.67	-13035	-564.98	42606	2113.44	3.741	Si
SLU 61	0.33	-11315	-187.47	36985	2100.04	11.202	Si
SLU 84	-1.67	-14155	-607.95	46268	2078.77	3.419	Si
SLU 84	0.33	-12473	-207.62	40769	2117.94	10.201	Si
SLU 80	-1.67	-13618	-579.31	44511	2099.68	3.624	Si
SLU 80	0.33	-11946	-194.75	39045	2114.32	10.856	Si
SLU 73	-1.67	-13886	-614	45388	2090.23	3.404	Si
SLU 73	0.33	-11918	-185.66	38956	2113.92	11.386	Si
SLU 78	-1.67	-13690	-584.86	44747	2097.33	3.586	Si
SLU 78	0.33	-12009	-195.02	39254	2115.16	10.846	Si
SLU 81	-1.67	-13675	-579.5	44698	2097.83	3.62	Si
SLU 81	0.33	-12322	-222.7	40276	2117.67	9.509	Si
SLU 82	-1.67	-14136	-613.85	46204	2079.67	3.388	Si
SLU 82	0.33	-12425	-207.98	40612	2117.92	10.183	Si
SLU 75	-1.67	-13670	-590.75	44683	2097.98	3.551	Si
SLU 75	0.33	-11961	-195.38	39097	2114.54	10.823	Si

Verifica a pressoflessione nel piano secondo D.M. 17-01-18 NTC §7.8.2.2.1 in combinazioni sismiche, γM = 2

Comb.	Quota	N	M	σ0	Mu	c.s.	Verifica
SLV 4	-1.67	-12797	-1384.5	41827	2860.95	2.066	Si

Comb.	Quota	N	M	σ0	Mu	c.s.	Verifica
SLV 4	0.33	-8410	-208.71	27490	2215.77	10.617	Si
SLV 15	-1.67	-2578	773.87	8426	815.92	1.054	Si
SLV 15	0.33	-6223	-167	20342	1763.35	10.559	Si
SLV 3	-1.67	-12797	-1384.5	41827	2860.95	2.066	Si
SLV 3	0.33	-8410	-208.71	27490	2215.77	10.617	Si
SLV 6	-1.67	-15862	-1004.14	51845	3104.1	3.091	Si
SLV 6	0.33	-11223	-0.06	36684	2669.75	1000	Si
SLV 1	-1.67	-15862	-1557.61	51846	3104.12	1.993	Si
SLV 1	0.33	-10062	-119.15	32888	2499.76	20.981	Si
SLV 14	-1.67	-5643	600.76	18446	1628.77	2.711	Si
SLV 14	0.33	-7875	-77.43	25740	2113.03	27.288	Si
SLV 13	-1.67	-5643	600.76	18446	1628.77	2.711	Si
SLV 13	0.33	-7875	-77.43	25740	2113.03	27.288	Si
SLV 16	-1.67	-2578	773.87	8426	815.92	1.054	Si
SLV 16	0.33	-6223	-167	20342	1763.35	10.559	Si
SLV 5	-1.67	-15862	-1004.14	51845	3104.1	3.091	Si
SLV 5	0.33	-11223	-0.06	36684	2669.75	1000	Si
SLV 2	-1.67	-15862	-1557.61	51846	3104.12	1.993	Si
SLV 2	0.33	-10062	-119.15	32888	2499.76	20.981	Si

Verifica a taglio nel piano secondo D.M. 17-01-18 (N.T.C.) §7.8.2.2.2 con rottura per scorrimento in combinazioni non sismiche, γM = 3

Comb.	Quota	N	V par	M	σ0	σN	I'	fvd	Vt scorr.	Vt fess.diag.	Vt,lim	c.s.	Verifica
SLU 80	-1.67	-13618	-1362	-579.31		44511	0.6799	10833	3314			2.43	Si
SLU 80	0.33	-11946	931	-194.75		39045	0.6799	10762	3292			3.54	Si
SLU 78	-1.67	-13690	-1375	-584.86		44747	0.6799	10833	3314			2.41	Si
SLU 78	0.33	-12009	933	-195.02		39254	0.6799	10789	3301			3.54	Si
SLU 76	-1.67	-13906	-1450	-608.11		45452	0.6799	10833	3314			2.29	Si
SLU 76	0.33	-11966	912	-185.3		39113	0.6799	10771	3295			3.61	Si
SLU 65	-1.67	-12586	-1354	-560.92		41138	0.6799	10833	3314			2.45	Si
SLU 65	0.33	-10575	787	-156.48		34567	0.6799	10164	3110			3.95	Si
SLU 52	-1.67	-12785	-1360	-565.13		41789	0.6799	10833	3314			2.44	Si
SLU 52	0.33	-10809	816	-165.15		35329	0.6799	10266	3141			3.85	Si
SLU 75	-1.67	-13670	-1390	-590.75		44683	0.6799	10833	3314			2.39	Si
SLU 75	0.33	-11961	928	-195.38		39097	0.6799	10768	3295			3.55	Si
SLU 82	-1.67	-14136	-1438	-613.85		46204	0.6799	10833	3314			2.3	Si
SLU 82	0.33	-12425	971	-207.98		40612	0.6799	10833	3314			3.41	Si
SLU 84	-1.67	-14155	-1424	-607.95		46268	0.6799	10833	3314			2.33	Si
SLU 84	0.33	-12473	976	-207.62		40769	0.6799	10833	3314			3.39	Si
SLU 55	-1.67	-12805	-1346	-559.24		41853	0.6799	10833	3314			2.46	Si
SLU 55	0.33	-10857	821	-164.79		35486	0.6799	10287	3147			3.83	Si
SLU 73	-1.67	-13886	-1465	-614		45388	0.6799	10833	3314			2.26	Si
SLU 73	0.33	-11918	906	-185.66		38956	0.6799	10750	3289			3.63	Si

Verifica a taglio nel piano secondo D.M. 17-01-18 (N.T.C.) §7.8.2.2.2 con rottura per scorrimento in combinazioni sismiche, γM = 2

Comb.	Quota	N	V par	M	σ0	σN	I'	fvd	Vt scorr.	Vt fess.diag.	Vt,lim	c.s.	Verifica
SLV 3	-1.67	-12797	-2900	-1384.5		41827	0.6799	16250	4972			1.71	Si
SLV 3	0.33	-8410	407	-208.71		27490	0.6799	13831	4232			10.4	Si
SLV 12	-1.67	-2578	1299	220.4		8427	0.6799	10019	3065			2.36	Si
SLV 12	0.33	-5062	1000	-286.09		16546	0.6799	11642	3562			3.56	Si
SLV 5	-1.67	-15862	-3115	-1004.14		51845	0.6799	16250	4972			1.6	Si
SLV 5	0.33	-11223	294	-0.06		36684	0.6799	15670	4794			16.32	Si
SLV 6	-1.67	-15862	-3115	-1004.14		51845	0.6799	16250	4972			1.6	Si
SLV 6	0.33	-11223	294	-0.06		36684	0.6799	15670	4794			16.32	Si
SLV 11	-1.67	-2578	1299	220.4		8427	0.6799	10019	3065			2.36	Si
SLV 11	0.33	-5062	1000	-286.09		16546	0.6799	11642	3562			3.56	Si
SLV 2	-1.67	-15862	-3786	-1557.61		51846	0.6799	16250	4972			1.31	Si
SLV 2	0.33	-10062	252	-119.15		32888	0.6799	14911	4562			18.09	Si
SLV 16	-1.67	-2578	1970	773.87		48035	0.1193	16250	872			0.44	No, Vu<V
SLV 16	0.33	-6223	1041	-167		20342	0.6799	12402	3794			3.64	Si
SLV 15	-1.67	-2578	1970	773.87		48035	0.1193	16250	872			0.44	No, Vu<V
SLV 15	0.33	-6223	1041	-167		20342	0.6799	12402	3794			3.64	Si
SLV 1	-1.67	-15862	-3786	-1557.61		51846	0.6799	16250	4972			1.31	Si
SLV 1	0.33	-10062	252	-119.15		32888	0.6799	14911	4562			18.09	Si
SLV 4	-1.67	-12797	-2900	-1384.5		41827	0.6799	16250	4972			1.71	Si
SLV 4	0.33	-8410	407	-208.71		27490	0.6799	13831	4232			10.4	Si

Verifica a pressoflessione fuori piano D.M. 17-01-18 (N.T.C.)

quota -0.67 Wa 0.08 denominatore 8 γM = 2

Comb.	fd	Sa	σ0	N	M	Mc	Coeff.s.	Verifica
SLV 11	143750	0.24	15007	-4591	22.42	906.17	40.41	Si
SLV 12	143750	0.24	15007	-4591	22.42	906.17	40.41	Si
SLV 15	143750	0.24	15613	-4777	22.42	937.43	41.8	Si
SLV 16	143750	0.24	15613	-4777	22.42	937.43	41.8	Si
SLV 7	143750	0.24	20816	-6369	22.42	1188.81	53.02	Si
SLV 8	143750	0.24	20816	-6369	22.42	1188.81	53.02	Si
SLV 14	143750	0.24	21942	-6713	22.42	1239.17	55.26	Si
SLV 13	143750	0.24	21942	-6713	22.42	1239.17	55.26	Si
SLV 4	143750	0.24	34977	-10701	22.42	1718.48	76.64	Si
SLV 3	143750	0.24	34977	-10701	22.42	1718.48	76.64	Si

Verifica dei meccanismi locali di collasso con analisi cinematica lineare

forza di aggancio al piano = 0 quota mezzeria = -0.67 Wa = 0.08 Ta = 0.0148

Comb.	N top	N base	V orto	α0	M*	e*	a0*	aLim	Verifica
SLV 1	-10062	-15862	-58	0.113	1110.6	0.976	1.68089	2.76068	No
SLV 2	-10062	-15862	-58	0.113	1110.6	0.976	1.68089	2.76068	No
SLV 3	-8410	-12797	-44	0.115	942.4	0.972	1.71211	2.76068	No
SLV 4	-8410	-12797	-44	0.115	942.4	0.972	1.71211	2.76068	No
SLV 6	-11223	-15862	-58	0.113	1228.9	0.978	1.67698	2.7022	No
SLV 5	-11223	-15862	-58	0.113	1228.9	0.978	1.67698	2.7022	No

Comb.	N top	N base	V orto	α0	M*	e*	a0*	aLim	Verifica
SLV 10	-10567	-12796	-43	0.114	1162.1	0.977	1.69837	2.7022	No
SLV 9	-10567	-12796	-43	0.114	1162.1	0.977	1.69837	2.7022	No
SLV 14	-7875	-5643	-11	0.119	887.9	0.97	1.77632	2.76068	No
SLV 13	-7875	-5643	-11	0.119	887.9	0.97	1.77632	2.76068	No

Tabella dei coefficienti di sicurezza minimi

Stato limite	Coeff.s.	Comb.	Verifica
PF_SLU	3.388	SLU 82	Si
V_SLU	2.263	SLU 73	Si
PF_SLV	1.054	SLV 15	Si
V_SLV	0.443	SLV 15	No
PFFP_SLV	40.411	SLV 11	Si
R_SLV	0.609	SLV 1	No

Maschio 40

Verifiche condotte secondo D.M. 17-01-18 (N.T.C.)

Dati geometrici

X ini.	Y ini.	X fin.	Y fin.	Quota i.	Quota.s	l	Sp.	h netta	h ini.	h fin.	a	a.s.,sx	a.s.,dx
-8.172	-3.288	-7.497	-3.288	Z medio 33 cm	Z medio 73 cm	0.675	0.45	0.4	0.4	0.4			

Caratteristiche del materiale

(Circolare 7 21-01-19 C8.5.I) Muratura in mattoni pieni e malta di calce LC2_Corti

fb	fk	fvk0	fmedio	τ0	fv0	μ	ϕ	fv,lim	E	G	FC
600000			345000	9000	20000	0.58	0.77	32500	320000000	128000000	1.2

Verifica a pressoflessione nel piano secondo D.M. 17-01-18 NTC §7.8.2.2.1 in combinazioni non sismiche, γM = 3

Comb.	Quota	N	M	σ0	Mu	c.s.	Verifica
SLU 78	0.33	-15114	780.27	49768	1984.11	2.543	Si
SLU 78	0.73	-13747	1341.27	45265	2061.01	1.537	Si
SLU 83	0.33	-15588	777.31	51329	1945.54	2.503	Si
SLU 83	0.73	-14157	1356.41	46615	2043.31	1.506	Si
SLU 76	0.33	-15038	785.39	49517	1989.73	2.533	Si
SLU 76	0.73	-13686	1347.39	45065	2063.24	1.531	Si
SLU 82	0.33	-15624	794.54	51448	1942.35	2.445	Si
SLU 82	0.73	-14213	1381.89	46802	2040.5	1.477	Si
SLU 80	0.33	-15038	776.8	49516	1989.76	2.562	Si
SLU 80	0.73	-13669	1332.13	45008	2063.86	1.549	Si
SLU 84	0.33	-15696	803.23	51683	1935.95	2.41	Si
SLU 84	0.73	-14275	1387.07	47004	2037.36	1.469	Si
SLU 81	0.33	-15517	768.63	51095	1951.73	2.539	Si
SLU 81	0.73	-14095	1351.23	46413	2046.25	1.514	Si
SLU 75	0.33	-15043	771.59	49534	1989.37	2.578	Si
SLU 75	0.73	-13685	1336.09	45063	2063.27	1.544	Si
SLU 73	0.33	-14967	776.7	49283	1994.85	2.568	Si
SLU 73	0.73	-13625	1342.2	44863	2065.4	1.539	Si
SLU 77	0.33	-15007	754.36	49414	1992	2.641	Si
SLU 77	0.73	-13629	1310.61	44876	2065.26	1.576	Si

Verifica a pressoflessione nel piano secondo D.M. 17-01-18 NTC §7.8.2.2.1 in combinazioni sismiche, γM = 2

Comb.	Quota	N	M	σ0	Mu	c.s.	Verifica
SLV 5	0.33	-13708	596.29	45137	2916.81	4.892	Si
SLV 5	0.73	-13260	1504.31	43663	2875.53	1.912	Si
SLV 13	0.33	-11156	1003.85	36735	2632.72	2.623	Si
SLV 13	0.73	-9175	728.72	30210	2330.42	3.198	Si
SLV 9	0.33	-13638	854.08	44906	2910.57	3.408	Si
SLV 9	0.73	-12541	1310.79	41295	2801.58	2.137	Si
SLV 2	0.33	-11391	144.57	37507	2663.75	18.426	Si
SLV 2	0.73	-11572	1373.8	38105	2687.11	1.956	Si
SLV 3	0.33	-9334	15.16	30735	2357.36	155.517	Si
SLV 3	0.73	-9406	1068.42	30973	2369.41	2.218	Si
SLV 1	0.33	-11391	144.57	37507	2663.75	18.426	Si
SLV 1	0.73	-11572	1373.8	38105	2687.11	1.956	Si
SLV 14	0.33	-11156	1003.85	36735	2632.72	2.623	Si
SLV 14	0.73	-9175	728.72	30210	2330.42	3.198	Si
SLV 6	0.33	-13708	596.29	45137	2916.81	4.892	Si
SLV 6	0.73	-13260	1504.31	43663	2875.53	1.912	Si
SLV 4	0.33	-9334	15.16	30735	2357.36	155.517	Si
SLV 4	0.73	-9406	1068.42	30973	2369.41	2.218	Si
SLV 10	0.33	-13638	854.08	44906	2910.57	3.408	Si
SLV 10	0.73	-12541	1310.79	41295	2801.58	2.137	Si

Verifica a taglio nel piano secondo D.M. 17-01-18 (N.T.C.) §7.8.2.2.2 con rottura per scorrimento in combinazioni non sismiche, γM = 3

Comb.	Quota	N	V par	M	σ0	σN	l'	fvd	Vt scorr.	Vt fess.diag.	Vt,lim	c.s.	Verifica
SLU 75	0.33	-15043	-1023	771.59		49534	0.6749	10833	3290			3.22	Si
SLU 75	0.73	-13685	177	1336.09		45063	0.6749	10833	3290			18.56	Si
SLU 81	0.33	-15517	-1036	768.63		51095	0.6749	10833	3290			3.18	Si
SLU 81	0.73	-14095	237	1351.23		46413	0.6749	10833	3290			13.89	Si
SLU 84	0.33	-15696	-1030	803.23		51683	0.6749	10833	3290			3.19	Si
SLU 84	0.73	-14275	208	1387.07		47004	0.6749	10833	3290			15.78	Si
SLU 82	0.33	-15624	-1053	794.54		51448	0.6749	10833	3290			3.13	Si
SLU 82	0.73	-14213	202	1381.89		46802	0.6749	10833	3290			16.27	Si
SLU 83	0.33	-15588	-1013	777.31		51329	0.6749	10833	3290			3.25	Si
SLU 83	0.73	-14157	243	1356.41		46615	0.6749	10833	3290			13.53	Si

Comb.	Quota	N	V par	M	σ0	σN	l'	fvd	Vt scorr.	Vt fess.diag.	Vt,lim	c.s.	Verifica
SLU 76	0.33	-15038	-1013	785.39		49517	0.6749	10833	3290			3.25	Si
SLU 76	0.73	-13686	160	1347.39		45065	0.6749	10833	3290			20.58	Si
SLU 73	0.33	-14967	-1036	776.7		49283	0.6749	10833	3290			3.18	Si
SLU 73	0.73	-13625	154	1342.2		44863	0.6749	10833	3290			21.42	Si
SLU 77	0.33	-15007	-984	754.36		49414	0.6749	10833	3290			3.34	Si
SLU 77	0.73	-13629	218	1310.61		44876	0.6749	10833	3290			15.08	Si
SLU 78	0.33	-15114	-1000	780.27		49768	0.6749	10833	3290			3.29	Si
SLU 78	0.73	-13747	183	1341.27		45265	0.6749	10833	3290			17.93	Si
SLU 74	0.33	-14936	-1007	745.67		49180	0.6749	10833	3290			3.27	Si
SLU 74	0.73	-13567	212	1305.43		44674	0.6749	10833	3290			15.53	Si

Verifica a taglio nel piano secondo D.M. 17-01-18 (N.T.C.) §7.8.2.2.2 con rottura per scorrimento in combinazioni sismiche, γM = 2

Comb.	Quota	N	V par	M	σ0	σN	l'	fvd	Vt scorr.	Vt fess.diag.	Vt,lim	c.s.	Verifica
SLV 15	0.33	-9100	3288	874.45		29963	0.6749	14326	4351			1.32	Si
SLV 15	0.73	-7009	1483	423.34		23078	0.6749	12949	3932			2.65	Si
SLV 14	0.33	-11156	2664	1003.85		36735	0.6749	15680	4762			1.79	Si
SLV 14	0.73	-9175	708	728.72		30210	0.6749	14375	4366			6.17	Si
SLV 4	0.33	-9334	-4111	15.16		30735	0.6749	14480	4398			1.07	Si
SLV 4	0.73	-9406	-454	1068.42		31126	0.6715	14559	4400			9.69	Si
SLV 6	0.33	-13708	-2873	596.29		45137	0.6749	16250	4935			1.72	Si
SLV 6	0.73	-13260	-1457	1504.31		43852	0.672	16250	4914			3.37	Si
SLV 3	0.33	-9334	-4111	15.16		30735	0.6749	14480	4398			1.07	Si
SLV 3	0.73	-9406	-454	1068.42		31126	0.6715	14559	4400			9.69	Si
SLV 2	0.33	-11391	-4735	144.57		37507	0.6749	15835	4809			1.02	Si
SLV 2	0.73	-11572	-1230	1373.8		39192	0.6562	16172	4775			3.88	Si
SLV 13	0.33	-11156	2664	1003.85		36735	0.6749	15680	4762			1.79	Si
SLV 13	0.73	-9175	708	728.72		30210	0.6749	14375	4366			6.17	Si
SLV 16	0.33	-9100	3288	874.45		29963	0.6749	14326	4351			1.32	Si
SLV 16	0.73	-7009	1483	423.34		23078	0.6749	12949	3932			2.65	Si
SLV 1	0.33	-11391	-4735	144.57		37507	0.6749	15835	4809			1.02	Si
SLV 1	0.73	-11572	-1230	1373.8		39192	0.6562	16172	4775			3.88	Si
SLV 5	0.33	-13708	-2873	596.29		45137	0.6749	16250	4935			1.72	Si
SLV 5	0.73	-13260	-1457	1504.31		43852	0.672	16250	4914			3.37	Si

Verifica a pressoflessione fuori piano D.M. 17-01-18 (N.T.C.)

quota 0.53 Wa 0.08 denominatore 8 γM = 2

Comb.	fd	Sa	σ0	N	M	Mc	Coeff.s.	Verifica
SLV 11	143750	0.26	21479	-6523	0.93	1209.69	1299.93	Si
SLV 12	143750	0.26	21479	-6523	0.93	1209.69	1299.93	Si
SLV 8	143750	0.26	21918	-6656	0.93	1229.03	1320.72	Si
SLV 7	143750	0.26	21918	-6656	0.93	1229.03	1320.72	Si
SLV 15	143750	0.26	29176	-8861	0.93	1517.59	1630.8	Si
SLV 16	143750	0.26	29176	-8861	0.93	1517.59	1630.8	Si
SLV 3	143750	0.26	30640	-9305	0.93	1568.64	1685.66	Si
SLV 4	143750	0.26	30640	-9305	0.93	1568.64	1685.66	Si
SLV 13	143750	0.26	36213	-10998	0.93	1741.1	1870.98	Si
SLV 14	143750	0.26	36213	-10998	0.93	1741.1	1870.98	Si

Verifica dei meccanismi locali di collasso con analisi cinematica lineare

forza di aggancio al piano = 0 quota mezzeria = 0.53 Wa = 0.08 Ta = 0.0006

Comb.	N top	N base	V orto	α0	M*	e*	a0*	aLim	Verifica
SLV 7	-6040	-6853	-176	0.544	632.5	0.991	7.97388	2.48421	Si
SLV 8	-6040	-6853	-176	0.544	632.5	0.991	7.97388	2.48421	Si
SLV 12	-5321	-6782	-164	0.544	559.1	0.99	7.97762	2.48421	Si
SLV 11	-5321	-6782	-164	0.544	559.1	0.99	7.97762	2.48421	Si
SLV 3	-9406	-9334	-116	0.557	975.6	0.994	8.13708	2.48622	Si
SLV 4	-9406	-9334	-116	0.557	975.6	0.994	8.13708	2.48622	Si
SLV 15	-7009	-9100	-78	0.56	731.2	0.992	8.20231	2.48622	Si
SLV 16	-7009	-9100	-78	0.56	731.2	0.992	8.20231	2.48622	Si
SLV 2	-11572	-11391	-54	0.563	1196.4	0.995	8.2222	2.48622	Si
SLV 1	-11572	-11391	-54	0.563	1196.4	0.995	8.2222	2.48622	Si

Tabella dei coefficienti di sicurezza minimi

Stato limite	Coeff.s.	Comb.	Verifica
PF_SLU	1.469	SLU 84	Si
V_SLU	3.126	SLU 82	Si
PF_SLV	1.912	SLV 5	Si
V_SLV	1.016	SLV 1	Si
PFFP_SLV	1299.926	SLV 11	Si
R_SLV	3.21	SLV 7	Si

Maschio 41

Verifiche condotte secondo D.M. 17-01-18 (N.T.C.)

Dati geometrici

X ini.	Y ini.	X fin.	Y fin.	Quota i.	Quota.s	l	Sp.	h netta	h ini.	h fin.	a	a.s.,sx	a.s.,dx
-8.172	-3.288	-7.492	-3.288	Z medio 73 cm	L3	0.68	0.45	0.59	0.59	0.59			

Caratteristiche del materiale

(Circolare 7 21-01-19 C8.5.I) Muratura in mattoni pieni e malta di calce LC2_Corti

fb	fk	fvk0	fmedio	τ0	fv0	μ	ϕ	fv,lim	E	G	FC
600000			345000	9000	20000	0.58	0.77	32500	320000000	128000000	1.2

Verifica a pressoflessione nel piano secondo D.M. 17-01-18 NTC §7.8.2.2.1 in combinazioni non sismiche, γM = 3

Comb.	Quota	N	M	σ0	Mu	c.s.	Verifica
SLU 73	0.73	-13720	1317	44845	2096.31	1.592	Si
SLU 73	1.32	-8049	464.6	26310	1852.47	3.987	Si
SLU 80	0.73	-13764	1306.82	44990	2094.76	1.603	Si
SLU 80	1.32	-8152	475.61	26644	1864.65	3.921	Si
SLU 75	0.73	-13781	1310.74	45044	2094.17	1.598	Si
SLU 75	1.32	-8150	477.32	26639	1864.46	3.906	Si
SLU 81	0.73	-14191	1324.85	46384	2077.12	1.568	Si
SLU 81	1.32	-8514	487.38	27830	1905.51	3.91	Si
SLU 84	0.73	-14370	1360.25	46971	2068.2	1.52	Si
SLU 84	1.32	-8548	484.23	27939	1909.07	3.942	Si
SLU 77	0.73	-13724	1285.4	44858	2096.17	1.631	Si
SLU 77	1.32	-8210	487.15	26836	1871.48	3.842	Si
SLU 76	0.73	-13782	1322.03	45046	2094.14	1.584	Si
SLU 76	1.32	-8096	467.94	26462	1858.06	3.971	Si
SLU 82	0.73	-14309	1355.22	46770	2071.35	1.528	Si
SLU 82	1.32	-8501	480.89	27786	1904.06	3.959	Si
SLU 83	0.73	-14252	1329.88	46585	2074.16	1.56	Si
SLU 83	1.32	-8561	490.72	27983	1910.51	3.893	Si
SLU 78	0.73	-13842	1315.77	45244	2091.91	1.59	Si
SLU 78	1.32	-8197	480.66	26791	1869.92	3.89	Si

Verifica a pressoflessione nel piano secondo D.M. 17-01-18 NTC §7.8.2.2.1 in combinazioni sismiche, γM = 2

Comb.	Quota	N	M	σ0	Mu	c.s.	Verifica
SLV 11	0.73	-5608	269.05	18331	1620.45	6.023	Si
SLV 11	1.32	-2039	366.46	6663	655.2	1.788	Si
SLV 7	0.73	-6325	462.44	20672	1786.21	3.863	Si
SLV 7	1.32	-1836	439.49	6001	593.48	1.35	Si
SLV 6	0.73	-13119	1495.28	42882	2894.61	1.936	Si
SLV 6	1.32	-9007	324.29	29440	2324.07	7.167	Si
SLV 9	0.73	-12403	1301.88	40541	2817.36	2.164	Si
SLV 9	1.32	-9209	251.27	30102	2359.37	9.39	Si
SLV 10	0.73	-12403	1301.88	40541	2817.36	2.164	Si
SLV 10	1.32	-9209	251.27	30102	2359.37	9.39	Si
SLV 1	0.73	-11577	1359.42	37840	2716.65	1.998	Si
SLV 1	1.32	-6261	449.8	20464	1771.82	3.939	Si
SLV 5	0.73	-13119	1495.28	42882	2894.61	1.936	Si
SLV 5	1.32	-9007	324.29	29440	2324.07	7.167	Si
SLV 12	0.73	-5608	269.05	18331	1620.45	6.023	Si
SLV 12	1.32	-2039	366.46	6663	655.2	1.788	Si
SLV 8	0.73	-6325	462.44	20672	1786.21	3.863	Si
SLV 8	1.32	-1836	439.49	6001	593.48	1.35	Si
SLV 2	0.73	-11577	1359.42	37840	2716.65	1.998	Si
SLV 2	1.32	-6261	449.8	20464	1771.82	3.939	Si

Verifica a taglio nel piano secondo D.M. 17-01-18 (N.T.C.) §7.8.2.2.2 con rottura per scorrimento in combinazioni non sismiche, γM = 3

Comb.	Quota	N	V par	M	σ0	σN	I'	fvd	Vt scorr.	Vt fess.diag.	Vt,lim	c.s.	Verifica
SLU 79	0.73	-13646	224	1276.45		44604	0.6799	10833	3314			14.8	Si
SLU 79	1.32	-8165	-986	482.1		26688	0.6799	9114	2788			2.83	Si
SLU 53	0.73	-12363	180	1161.94		40411	0.6799	10833	3314			18.45	Si
SLU 53	1.32	-7314	-923	452.72		23906	0.6799	8743	2675			2.9	Si
SLU 74	0.73	-13663	212	1280.37		44658	0.6799	10833	3314			15.64	Si
SLU 74	1.32	-8163	-998	483.81		26683	0.6799	9113	2788			2.79	Si
SLU 81	0.73	-14191	237	1324.85		46384	0.6799	10833	3314			13.99	Si
SLU 81	1.32	-8514	-1012	487.38		27830	0.6799	9266	2835			2.8	Si
SLU 77	0.73	-13724	218	1285.4		44858	0.6799	10833	3314			15.19	Si
SLU 77	1.32	-8210	-999	487.15		26836	0.6799	9134	2794			2.8	Si
SLU 83	0.73	-14252	243	1329.88		46585	0.6799	10833	3314			13.63	Si
SLU 83	1.32	-8561	-1013	490.72		27983	0.6799	9287	2841			2.8	Si
SLU 64	0.73	-11966	152	1129.98		39111	0.6799	10770	3295			21.67	Si
SLU 64	1.32	-7039	-918	447.5		23006	0.6799	8623	2638			2.87	Si
SLU 69	0.73	-12167	159	1148.99		39768	0.6799	10833	3314			20.87	Si
SLU 69	1.32	-7177	-933	459.24		23459	0.6799	8683	2657			2.85	Si
SLU 66	0.73	-12105	153	1143.96		39567	0.6799	10831	3314			21.72	Si
SLU 66	1.32	-7130	-932	455.9		23306	0.6799	8663	2650			2.84	Si
SLU 71	0.73	-12089	165	1140.04		39513	0.6799	10824	3312			20.12	Si
SLU 71	1.32	-7132	-920	454.19		23311	0.6799	8664	2651			2.88	Si

Verifica a taglio nel piano secondo D.M. 17-01-18 (N.T.C.) §7.8.2.2.2 con rottura per scorrimento in combinazioni sismiche, γM = 2

Comb.	Quota	N	V par	M	σ0	σN	I'	fvd	Vt scorr.	Vt fess.diag.	Vt,lim	c.s.	Verifica
SLV 8	0.73	-6325	1166	462.44		20672	0.6799	12468	3814			3.27	Si
SLV 8	1.32	-1836	5427	439.49		13523	0.3017	11038	1499			0.28	No, Vu<V
SLV 9	0.73	-12403	-913	1301.88		40541	0.6799	16250	4972			5.45	Si
SLV 9	1.32	-9209	-6844	251.27		30102	0.6799	14354	4391			0.64	No, Vu<V
SLV 6	0.73	-13119	-1410	1495.28		43008	0.6779	16250	4957			3.52	Si
SLV 6	1.32	-9007	-8228	324.29		29440	0.6799	14221	4351			0.53	No, Vu<V
SLV 2	0.73	-11577	-1089	1359.42		38539	0.6675	16041	4819			4.43	Si
SLV 2	1.32	-6261	-5063	449.8		20464	0.6799	12426	3802			0.75	No, Vu<V
SLV 1	0.73	-11577	-1089	1359.42		38539	0.6675	16041	4819			4.43	Si
SLV 1	1.32	-6261	-5063	449.8		20464	0.6799	12426	3802			0.75	No, Vu<V
SLV 10	0.73	-12403	-913	1301.88		40541	0.6799	16250	4972			5.45	Si
SLV 10	1.32	-9209	-6844	251.27		30102	0.6799	14354	4391			0.64	No, Vu<V
SLV 12	0.73	-5608	1664	269.05		18331	0.6799	12000	3671			2.21	Si
SLV 12	1.32	-2039	6810	366.46		9428	0.4805	10219	2210			0.32	No, Vu<V
SLV 7	0.73	-6325	1166	462.44		20672	0.6799	12468	3814			3.27	Si
SLV 7	1.32	-1836	5427	439.49		13523	0.3017	11038	1499			0.28	No, Vu<V
SLV 5	0.73	-13119	-1410	1495.28		43008	0.6779	16250	4957			3.52	Si
SLV 5	1.32	-9007	-8228	324.29		29440	0.6799	14221	4351			0.53	No, Vu<V
SLV 11	0.73	-5608	1664	269.05		18331	0.6799	12000	3671			2.21	Si

Comb.	Quota	N	V par	M	σ0	σN	l'	fvd	Vt scorr.	Vt fess.diag.	Vt,lim	c.s.	Verifica
SLV 11	1.32	-2039	6810	366.46		9428	0.4805	10219	2210			0.32	No, Vu<V

Verifica a pressoflessione fuori piano D.M. 17-01-18 (N.T.C.)

quota 1.025 Wa 0.08 denominatore 8 γM = 2

Comb.	fd	Sa	σ0	N	M	Mc	Coeff.s.	Verifica
SLV 7	143750	0.27	8322	-2546	2.12	533.86	251.59	Si
SLV 8	143750	0.27	8322	-2546	2.12	533.86	251.59	Si
SLV 11	143750	0.27	8944	-2736	2.12	570.63	268.92	Si
SLV 12	143750	0.27	8944	-2736	2.12	570.63	268.92	Si
SLV 4	143750	0.27	14387	-4402	2.12	873.74	411.77	Si
SLV 3	143750	0.27	14387	-4402	2.12	873.74	411.77	Si
SLV 16	143750	0.27	16460	-5036	2.12	980.43	462.05	Si
SLV 15	143750	0.27	16460	-5036	2.12	980.43	462.05	Si
SLV 2	143750	0.27	20207	-6182	2.12	1160.95	547.12	Si
SLV 1	143750	0.27	20207	-6182	2.12	1160.95	547.12	Si

Verifica dei meccanismi locali di collasso con analisi cinematica lineare

forza di aggancio al piano = 0 quota mezzeria = 1.025 Wa = 0.08 Ta = 0.0013

Comb.	N top	N base	V orto	α0	M*	e*	a0*	aLim	Verifica
SLV 12	-2039	-5608	1137	0	233	0.967	0	2.57069	No
SLV 11	-2039	-5608	1137	0	233	0.967	0	2.57069	No
SLV 8	-1836	-6325	1171	0	212.4	0.964	0	2.57069	No
SLV 7	-1836	-6325	1171	0	212.4	0.964	0	2.57069	No
SLV 5	-9007	-13119	-1749	0.197	943	0.991	2.89361	2.57069	Si
SLV 6	-9007	-13119	-1749	0.197	943	0.991	2.89361	2.57069	Si
SLV 10	-9209	-12403	-1783	0.198	963.7	0.992	2.89834	2.57069	Si
SLV 9	-9209	-12403	-1783	0.198	963.7	0.992	2.89834	2.57069	Si
SLV 14	-6936	-9189	-800	0.277	732	0.989	4.07561	2.57522	Si
SLV 13	-6936	-9189	-800	0.277	732	0.989	4.07561	2.57522	Si

Tabella dei coefficienti di sicurezza minimi

Stato limite	Coeff.s.	Comb.	Verifica
PF_SLU	1.52	SLU 84	Si
V_SLU	2.794	SLU 74	Si
PF_SLV	1.35	SLV 7	Si
V_SLV	0.276	SLV 7	No
PFFP_SLV	251.594	SLV 7	Si
R_SLV	0	SLV 7	No

Maschio 42

Verifiche condotte secondo D.M. 17-01-18 (N.T.C.)

Dati geometrici

X ini.	Y ini.	X fin.	Y fin.	Quota i.	Quota.s	l	Sp.	h netta	h ini.	h fin.	a	a.s.,sx	a.s.,dx
-7.842	-3.288	-7.842	-4.714	L1	L3	1.425	0.45	2.99	2.99	2.99			

Caratteristiche del materiale

(Circolare 7 21-01-19 C8.5.I) Muratura in mattoni pieni e malta di calce LC2_Corti

fb	fk	fvk0	fmedio	τ0	fv0	μ	ϕ	fv,lim	E	G	FC
600000			345000	9000	20000	0.58	0.77	32500	320000000	128000000	1.2

Verifica a pressoflessione nel piano secondo D.M. 17-01-18 NTC §7.8.2.2.1 in combinazioni non sismiche, γM = 3

Comb.	Quota	N	M	σ0	Mu	c.s.	Verifica
SLU 13	-1.67	-14182	-1499.51	22109	7364.46	4.911	Si
SLU 13	1.32	-7803	363.89	12165	4730.95	13.001	Si
SLU 82	-1.67	-19263	-1761.32	30031	8667.89	4.921	Si
SLU 82	1.32	-10056	96.52	15677	5787.87	59.963	Si
SLU 34	-1.67	-15439	-1688.14	24068	7752.33	4.592	Si
SLU 34	1.32	-8541	291.72	13316	5092.5	17.457	Si
SLU 31	-1.67	-15333	-1698.04	23903	7721.32	4.547	Si
SLU 31	1.32	-8403	246.79	13099	5025.67	20.364	Si
SLU 40	-1.67	-15933	-1592.17	24839	7893.11	4.957	Si
SLU 40	1.32	-8465	53.1	13196	5055.67	95.218	Si
SLU 73	-1.67	-18663	-1867.19	29095	8550.62	4.579	Si
SLU 73	1.32	-9994	290.22	15580	5760.57	19.849	Si
SLU 52	-1.67	-17407	-1678.56	27136	8273.28	4.929	Si
SLU 52	1.32	-9256	362.39	14429	5428.27	14.979	Si
SLU 76	-1.67	-18769	-1857.28	29260	8572.02	4.615	Si
SLU 76	1.32	-10133	335.15	15796	5821.37	17.37	Si
SLU 23	-1.67	-13865	-1473.4	21616	7259.89	4.927	Si
SLU 23	1.32	-7596	356.64	11841	4626.65	12.973	Si
SLU 10	-1.67	-14076	-1509.41	21944	7329.82	4.856	Si
SLU 10	1.32	-7664	318.96	11948	4661.32	14.614	Si

Verifica a pressoflessione nel piano secondo D.M. 17-01-18 NTC §7.8.2.2.1 in combinazioni sismiche, γM = 2

Comb.	Quota	N	M	σ0	Mu	c.s.	Verifica
SLV 14	-1.67	-16542	1577.36	25788	9301.47	5.897	Si
SLV 14	1.32	-8889	1700.94	13857	5616.83	3.302	Si
SLV 2	-1.67	-15323	-3193.36	23888	8786.02	2.751	Si
SLV 2	1.32	-4348	-1510.53	6779	2927.3	1.938	Si
SLV 1	-1.67	-15323	-3193.36	23888	8786.02	2.751	Si
SLV 1	1.32	-4348	-1510.53	6779	2927.3	1.938	Si
SLV 4	-1.67	-10089	-3372.31	15728	6265.03	1.858	Si
SLV 4	1.32	-4291	-1680.4	6689	2890.65	1.72	Si

Comb.	Quota	N	M	σ0	Mu	c.s.	Verifica
SLV 15	-1.67	-11308	1398.41	17628	6896.5	4.932	Si
SLV 15	1.32	-8831	1531.06	13767	5584.95	3.648	Si
SLV 13	-1.67	-16542	1577.36	25788	9301.47	5.897	Si
SLV 13	1.32	-8889	1700.94	13857	5616.83	3.302	Si
SLV 8	-1.67	-4409	-1911.34	6873	2965.6	1.552	Si
SLV 8	1.32	-5812	-754.58	9061	3835.41	5.083	Si
SLV 16	-1.67	-11308	1398.41	17628	6896.5	4.932	Si
SLV 16	1.32	-8831	1531.06	13767	5584.95	3.648	Si
SLV 3	-1.67	-10089	-3372.31	15728	6265.03	1.858	Si
SLV 3	1.32	-4291	-1680.4	6689	2890.65	1.72	Si
SLV 7	-1.67	-4409	-1911.34	6873	2965.6	1.552	Si
SLV 7	1.32	-5812	-754.58	9061	3835.41	5.083	Si

Verifica a taglio nel piano secondo D.M. 17-01-18 (N.T.C.) §7.8.2.2.2 con rottura per scorrimento in combinazioni non sismiche, γM = 3

Comb.	Quota	N	V par	M	σ0	σN	l'	fvd	Vt scorr.	Vt fess.diag.	Vt,lim	c.s.	Verifica
SLU 65	-1.67	-17196	-519	-1642.54		26807	1.4255	9130	5856			11.28	Si
SLU 65	1.32	-9187	-1162	400.07		14322	1.4255	7465	4789			4.12	Si
SLU 55	-1.67	-17512	-532	-1668.65		27301	1.4255	9196	5899			11.08	Si
SLU 55	1.32	-9395	-1191	407.32		14646	1.4255	7508	4816			4.04	Si
SLU 52	-1.67	-17407	-520	-1678.56		27136	1.4255	9174	5885			11.32	Si
SLU 52	1.32	-9256	-1171	362.39		14429	1.4255	7479	4798			4.1	Si
SLU 47	-1.67	-16045	-518	-1444.01		25014	1.4255	8891	5703			11	Si
SLU 47	1.32	-8588	-1109	517.17		13388	1.4255	7341	4709			4.25	Si
SLU 44	-1.67	-15939	-506	-1453.91		24849	1.4255	8869	5689			11.24	Si
SLU 44	1.32	-8449	-1089	472.24		13171	1.4255	7312	4690			4.31	Si
SLU 31	-1.67	-15333	-526	-1698.04		23903	1.4255	8743	5608			10.66	Si
SLU 31	1.32	-8403	-1118	246.79		13099	1.4255	7302	4684			4.19	Si
SLU 73	-1.67	-18663	-533	-1867.19		29095	1.4255	9435	6052			11.35	Si
SLU 73	1.32	-9994	-1245	290.22		15580	1.4255	7633	4896			3.93	Si
SLU 68	-1.67	-17302	-532	-1632.64		26972	1.4255	9152	5871			11.04	Si
SLU 68	1.32	-9326	-1182	444.99		14539	1.4255	7494	4807			4.07	Si
SLU 76	-1.67	-18769	-546	-1857.28		29260	1.4255	9457	6066			11.12	Si
SLU 76	1.32	-10133	-1264	335.15		15796	1.4255	7662	4915			3.89	Si
SLU 34	-1.67	-15439	-538	-1688.14		24068	1.4255	8765	5622			10.44	Si
SLU 34	1.32	-8541	-1138	291.72		13316	1.4255	7331	4702			4.13	Si

Verifica a taglio nel piano secondo D.M. 17-01-18 (N.T.C.) §7.8.2.2.2 con rottura per scorrimento in combinazioni sismiche, γM = 2

Comb.	Quota	N	V par	M	σ0	σN	l'	fvd	Vt scorr.	Vt fess.diag.	Vt,lim	c.s.	Verifica
SLV 10	-1.67	-22222	4244	116.39		34643	1.4255	15262	9790			2.31	Si
SLV 10	1.32	-7367	3486	775.11		11485	1.4255	10630	6819			1.96	Si
SLV 16	-1.67	-11308	-2148	1398.41		17628	1.4255	11859	7607			3.54	Si
SLV 16	1.32	-8831	-3283	1531.06		13767	1.4255	11087	7112			2.17	Si
SLV 11	-1.67	-4775	-4786	-480.12		7443	1.4255	9822	6300			1.32	Si
SLV 11	1.32	-7174	-5425	208.86		11185	1.4255	10570	6780			1.25	Si
SLV 9	-1.67	-22222	4244	116.39		34643	1.4255	15262	9790			2.31	Si
SLV 9	1.32	-7367	3486	775.11		11485	1.4255	10630	6819			1.96	Si
SLV 12	-1.67	-4775	-4786	-480.12		7443	1.4255	9822	6300			1.32	Si
SLV 12	1.32	-7174	-5425	208.86		11185	1.4255	10570	6780			1.25	Si
SLV 8	-1.67	-4409	-4339	-1911.34		11697	0.8376	10673	4023			0.93	No, Vu<V
SLV 8	1.32	-5812	-4588	-754.58		9061	1.4255	10146	6508			1.42	Si
SLV 7	-1.67	-4409	-4339	-1911.34		11697	0.8376	10673	4023			0.93	No, Vu<V
SLV 7	1.32	-5812	-4588	-754.58		9061	1.4255	10146	6508			1.42	Si
SLV 5	-1.67	-21856	4692	-1314.82		34073	1.4255	15148	9717			2.07	Si
SLV 5	1.32	-6005	4323	-188.33		9362	1.4255	10206	6546			1.51	Si
SLV 15	-1.67	-11308	-2148	1398.41		17628	1.4255	11859	7607			3.54	Si
SLV 15	1.32	-8831	-3283	1531.06		13767	1.4255	11087	7112			2.17	Si
SLV 6	-1.67	-21856	4692	-1314.82		34073	1.4255	15148	9717			2.07	Si
SLV 6	1.32	-6005	4323	-188.33		9362	1.4255	10206	6546			1.51	Si

Verifica a pressoflessione fuori piano D.M. 17-01-18 (N.T.C.)

quota -0.175 Wa 0.08 denominatore 8 γM = 2

Comb.	fd	Sa	σ0	N	M	Mc	Coeff.s.	Verifica
SLV 8	143750	0.24	5135	-3294	105.08	709.92	6.76	Si
SLV 7	143750	0.24	5135	-3294	105.08	709.92	6.76	Si
SLV 12	143750	0.24	5471	-3509	105.08	754.22	7.18	Si
SLV 11	143750	0.24	5471	-3509	105.08	754.22	7.18	Si
SLV 4	143750	0.24	12307	-7895	105.08	1597.38	15.2	Si
SLV 3	143750	0.24	12307	-7895	105.08	1597.38	15.2	Si
SLV 15	143750	0.24	13428	-8613	105.08	1725.03	16.42	Si
SLV 16	143750	0.24	13428	-8613	105.08	1725.03	16.42	Si
SLV 2	143750	0.24	18792	-12054	105.08	2295.05	21.84	Si
SLV 1	143750	0.24	18792	-12054	105.08	2295.05	21.84	Si

Verifica dei meccanismi locali di collasso con analisi cinematica lineare

forza di aggancio al piano = 0 quota mezzeria = -0.175 Wa = 0.08 Ta = 0.0332

Comb.	N top	N base	V orto	α0	M*	e*	a0*	aLim	Verifica
SLV 9	-7367	-22222	846	0	1024.1	0.929	0	3.42705	No
SLV 12	-7174	-4775	-1349	0	1004.7	0.928	0	3.42705	No
SLV 6	-6005	-21856	946	0	887.1	0.92	0	3.42705	No
SLV 5	-6005	-21856	946	0	887.1	0.92	0	3.42705	No
SLV 11	-7174	-4775	-1349	0	1004.7	0.928	0	3.42705	No
SLV 8	-5812	-4409	-1249	0	867.8	0.919	0	3.42705	No
SLV 10	-7367	-22222	846	0	1024.1	0.929	0	3.42705	No
SLV 7	-5812	-4409	-1249	0	867.8	0.919	0	3.42705	No
SLV 15	-8831	-11308	-697	0.022	1172	0.936	0.3346	3.6078	No
SLV 16	-8831	-11308	-697	0.022	1172	0.936	0.3346	3.6078	No

Tabella dei coefficienti di sicurezza minimi

Stato limite	Coeff.s.	Comb.	Verifica

Stato limite	Coeff.s.	Comb.	Verifica
PF_SLU	4.547	SLU 31	Si
V_SLU	3.887	SLU 76	Si
PF_SLV	1.552	SLV 7	Si
V_SLV	0.927	SLV 7	No
PFFP_SLV	6.756	SLV 7	Si
R_SLV	0	SLV 5	No

Maschio 43

Verifiche condotte secondo D.M. 17-01-18 (N.T.C.)

Dati geometrici

X ini.	Y ini.	X fin.	Y fin.	Quota i.	Quota.s	l	Sp.	h netta	h ini.	h fin.	a	a.s.,sx	a.s.,dx
-6.268	1.032	-6.268	-3.288	L1	L3	4.32	0.3	2.99	2.99	2.99			

Caratteristiche del materiale

(Circolare 7 21-01-19 C8.5.I) Muratura in mattoni pieni e malta di calce LC2_Corti

fb	fk	fvk0	fmedio	τ0	fv0	μ	ϕ	fv,lim	E	G	FC
600000			345000	9000	20000	0.58	0.77	32500	320000000	128000000	1.2

Verifica a pressoflessione nel piano secondo D.M. 17-01-18 NTC §7.8.2.2.1 in combinazioni non sismiche, γM = 3

Comb.	Quota	N	M	σ0	Mu	c.s.	Verifica
SLU 76	-1.67	-70255	-8482.54	54206	50773.19	5.986	Si
SLU 76	1.32	-74020	16581.92	57110	47792.14	2.882	Si
SLU 78	-1.67	-71646	-10153.26	55279	49739.54	4.899	Si
SLU 78	1.32	-75845	15985.73	58518	46138.59	2.886	Si
SLU 82	-1.67	-72651	-10174.5	56054	48943.14	4.81	Si
SLU 82	1.32	-76736	16903.53	59206	45281.12	2.679	Si
SLU 83	-1.67	-73621	-12352.81	56803	48135.45	3.897	Si
SLU 83	1.32	-78092	15991.59	60252	43915.08	2.746	Si
SLU 75	-1.67	-70909	-9850.19	54710	50296.87	5.106	Si
SLU 75	1.32	-74950	16275.23	57828	46966.32	2.886	Si
SLU 74	-1.67	-71143	-11725.44	54890	50122.69	4.275	Si
SLU 74	1.32	-75411	15652.79	58184	46543.98	2.974	Si
SLU 81	-1.67	-72884	-12049.75	56234	48752.32	4.046	Si
SLU 81	1.32	-77197	16281.09	59562	44825.09	2.753	Si
SLU 80	-1.67	-71147	-10035.76	54894	50119.18	4.994	Si
SLU 80	1.32	-75222	15877.46	58038	46718.31	2.942	Si
SLU 73	-1.67	-69518	-8179.47	53637	51288.6	6.27	Si
SLU 73	1.32	-73125	16871.42	56420	48553.06	2.878	Si
SLU 84	-1.67	-73388	-10477.57	56623	48333.3	4.613	Si
SLU 84	1.32	-77631	16614.03	59897	44387.99	2.672	Si

Verifica a pressoflessione nel piano secondo D.M. 17-01-18 NTC §7.8.2.2.1 in combinazioni sismiche, γM = 2

Comb.	Quota	N	M	σ0	Mu	c.s.	Verifica
SLV 8	-1.67	-41889	-24313.08	32320	66552.25	2.737	Si
SLV 8	1.32	-43100	-5693.62	33254	67764.15	11.902	Si
SLV 15	-1.67	-52895	-24740.97	40812	76097.21	3.076	Si
SLV 15	1.32	-51842	823.31	39999	75326.84	91.493	Si
SLV 11	-1.67	-45205	-31029.5	34878	69775.55	2.249	Si
SLV 11	1.32	-44673	-8735.52	34468	69278.64	7.931	Si
SLV 7	-1.67	-41889	-24313.08	32320	66552.25	2.737	Si
SLV 7	1.32	-43100	-5693.62	33254	67764.15	11.902	Si
SLV 16	-1.67	-52895	-24740.97	40812	76097.21	3.076	Si
SLV 16	1.32	-51842	823.31	39999	75326.84	91.493	Si
SLV 12	-1.67	-45205	-31029.5	34878	69775.55	2.249	Si
SLV 12	1.32	-44673	-8735.52	34468	69278.64	7.931	Si
SLV 5	-1.67	-52810	16042.23	40746	76035.63	4.74	Si
SLV 5	1.32	-58341	31757	45013	79597.68	2.506	Si
SLV 6	-1.67	-52810	16042.23	40746	76035.63	4.74	Si
SLV 6	1.32	-58341	31757	45013	79597.68	2.506	Si
SLV 9	-1.67	-56125	9325.81	43304	78271.17	8.393	Si
SLV 9	1.32	-59913	28715.09	46227	80458.24	2.802	Si
SLV 10	-1.67	-56125	9325.81	43304	78271.17	8.393	Si
SLV 10	1.32	-59913	28715.09	46227	80458.24	2.802	Si

Verifica a taglio nel piano secondo D.M. 17-01-18 (N.T.C.) §7.8.2.2.2 con rottura per scorrimento in combinazioni non sismiche, γM = 3

Comb.	Quota	N	V par	M	σ0	σN	l'	fvd	Vt scorr.	Vt fess.diag.	Vt,lim	c.s.	Verifica
SLU 83	-1.67	-73621	486	-12352.81		56803	4.3203	10833	14041			28.92	Si
SLU 83	1.32	-78092	-4263	15991.59		60252	4.3203	10833	14041			3.29	Si
SLU 56	-1.67	-65470	421	-10381.09		50513	4.3203	10833	14041			33.32	Si
SLU 56	1.32	-68994	-3780	14613.06		53233	4.3203	10833	14041			3.71	Si
SLU 79	-1.67	-71381	513	-11911.01		55074	4.3203	10833	14041			27.37	Si
SLU 79	1.32	-75683	-4099	15255.02		58393	4.3203	10833	14041			3.43	Si
SLU 77	-1.67	-71879	508	-12028.5		55459	4.3203	10833	14041			27.62	Si
SLU 77	1.32	-76306	-4142	15363.29		58874	4.3203	10833	14041			3.39	Si
SLU 74	-1.67	-71143	449	-11725.44		54890	4.3203	10833	14041			31.3	Si
SLU 74	1.32	-75411	-4137	15652.79		58184	4.3203	10833	14041			3.39	Si
SLU 81	-1.67	-72884	426	-12049.75		56234	4.3203	10833	14041			32.97	Si
SLU 81	1.32	-77197	-4258	16281.09		59562	4.3203	10833	14041			3.3	Si
SLU 62	-1.67	-67212	398	-10705.4		51857	4.3203	10833	14041			35.24	Si
SLU 62	1.32	-70780	-3901	15241.36		54611	4.3203	10833	14041			3.6	Si
SLU 60	-1.67	-66475	339	-10402.33		51289	4.3203	10833	14041			41.45	Si
SLU 60	1.32	-69886	-3895	15530.86		53921	4.3203	10833	14041			3.6	Si
SLU 53	-1.67	-64733	362	-10078.02		49945	4.3203	10833	14041			38.83	Si
SLU 53	1.32	-68100	-3774	14902.55		52543	4.3203	10833	14041			3.72	Si
SLU 69	-1.67	-64933	433	-10290.48		50099	4.3203	10833	14041			32.42	Si

Comb.	Quota	N	V par	M	σ0	σN	l'	fvd	Vt scorr.	Vt fess.diag.	Vt,lim	c.s.	Verifica
SLU 69	1.32	-68597	-3747	14320.12		52926	4.3203	10833	14041			3.75	Si

Verifica a taglio nel piano secondo D.M. 17-01-18 (N.T.C.) §7.8.2.2.2 con rottura per scorrimento in combinazioni sismiche, γM = 2

Comb.	Quota	N	V par	M	σ0	σN	l'	fvd	Vt scorr.	Vt fess.diag.	Vt,lim	c.s.	Verifica
SLV 8	-1.67	-41889	-16867	-24313.08		32320	4.3203	14797	19179			1.14	Si
SLV 8	1.32	-43100	-19958	-5693.62		33254	4.3203	14984	19421			0.97	No, Vu<V
SLV 5	-1.67	-52810	18099	16042.23		40746	4.3203	16250	21061			1.16	Si
SLV 5	1.32	-58341	13535	31757		45013	4.3203	16250	21061			1.56	Si
SLV 11	-1.67	-45205	-17604	-31029.5		34878	4.3203	15309	19842			1.13	Si
SLV 11	1.32	-44673	-19284	-8735.52		34468	4.3203	15227	19735			1.02	Si
SLV 12	-1.67	-45205	-17604	-31029.5		34878	4.3203	15309	19842			1.13	Si
SLV 12	1.32	-44673	-19284	-8735.52		34468	4.3203	15227	19735			1.02	Si
SLV 9	-1.67	-56125	17361	9325.81		43304	4.3203	16250	21061			1.21	Si
SLV 9	1.32	-59913	14209	28715.09		46227	4.3203	16250	21061			1.48	Si
SLV 10	-1.67	-56125	17361	9325.81		43304	4.3203	16250	21061			1.21	Si
SLV 10	1.32	-59913	14209	28715.09		46227	4.3203	16250	21061			1.48	Si
SLV 6	-1.67	-52810	18099	16042.23		40746	4.3203	16250	21061			1.16	Si
SLV 6	1.32	-58341	13535	31757		45013	4.3203	16250	21061			1.56	Si
SLV 7	-1.67	-41889	-16867	-24313.08		32320	4.3203	14797	19179			1.14	Si
SLV 7	1.32	-43100	-19958	-5693.62		33254	4.3203	14984	19421			0.97	No, Vu<V
SLV 4	-1.67	-41843	-3768	-2352.89		32284	4.3203	14790	19169			5.09	Si
SLV 4	1.32	-46599	-9021	10962.98		35954	4.3203	15524	20121			2.23	Si
SLV 3	-1.67	-41843	-3768	-2352.89		32284	4.3203	14790	19169			5.09	Si
SLV 3	1.32	-46599	-9021	10962.98		35954	4.3203	15524	20121			2.23	Si

Verifica a pressoflessione fuori piano D.M. 17-01-18 (N.T.C.)

quota -0.175 Wa 0.05 denominatore 8 γM = 2

Comb.	fd	Sa	σ0	N	M	Mc	Coeff.s.	Verifica
SLV 7	143750	0.24	31755	-41158	212.32	4569.17	21.52	Si
SLV 8	143750	0.24	31755	-41158	212.32	4569.17	21.52	Si
SLV 11	143750	0.24	33140	-42953	212.32	4695.42	22.11	Si
SLV 12	143750	0.24	33140	-42953	212.32	4695.42	22.11	Si
SLV 4	143750	0.24	34261	-44405	212.32	4793.09	22.57	Si
SLV 3	143750	0.24	34261	-44405	212.32	4793.09	22.57	Si
SLV 2	143750	0.24	37793	-48983	212.32	5074.87	23.9	Si
SLV 1	143750	0.24	37793	-48983	212.32	5074.87	23.9	Si
SLV 15	143750	0.24	38877	-50388	212.32	5153.38	24.27	Si
SLV 16	143750	0.24	38877	-50388	212.32	5153.38	24.27	Si

Verifica dei meccanismi locali di collasso con analisi cinematica lineare

forza di aggancio al piano = 0 quota mezzeria = -0.175 Wa = 0.05 Ta = 0.0498

Comb.	N top	N base	V orto	α0	M*	e*	a0*	aLim	Verifica
SLV 14	-56414	-56171	-33	0.053	6289.3	0.973	0.78456	4.54426	No
SLV 13	-56414	-56171	-33	0.053	6289.3	0.973	0.78456	4.54426	No
SLV 16	-51842	-52895	-32	0.053	5823.7	0.971	0.78931	4.54426	No
SLV 15	-51842	-52895	-32	0.053	5823.7	0.971	0.78931	4.54426	No
SLV 2	-51172	-45119	32	0.053	5755.4	0.971	0.78991	4.54426	No
SLV 1	-51172	-45119	32	0.053	5755.4	0.971	0.78991	4.54426	No
SLV 4	-46599	-41843	33	0.053	5289.9	0.969	0.79519	4.54426	No
SLV 3	-46599	-41843	33	0.053	5289.9	0.969	0.79519	4.54426	No
SLV 9	-59913	-56125	-11	0.053	6645.7	0.975	0.78666	4.18901	No
SLV 10	-59913	-56125	-11	0.053	6645.7	0.975	0.78666	4.18901	No

Tabella dei coefficienti di sicurezza minimi

Stato limite	Coeff.s.	Comb.	Verifica
PF_SLU	2.672	SLU 84	Si
V_SLU	3.294	SLU 83	Si
PF_SLV	2.249	SLV 11	Si
V_SLV	0.973	SLV 7	No
PFFP_SLV	21.52	SLV 7	Si
R_SLV	0.173	SLV 13	No

Maschio 44

Verifiche condotte secondo D.M. 17-01-18 (N.T.C.)

Dati geometrici

X ini.	Y ini.	X fin.	Y fin.	Quota i.	Quota.s	l	Sp.	h netta	h ini.	h fin.	a	a.s.,sx	a.s.,dx
-5.158	2.268	-5.158	6.101	L1	L3	3.833	0.3	2.99	2.99	2.99			

Caratteristiche del materiale

(Circolare 7 21-01-19 C8.5.I) Muratura in mattoni pieni e malta di calce LC2_Corti

fb	fk	fvk0	fmedio	τ0	fv0	μ	ϕ	fv,lim	E	G	FC
600000			345000	9000	20000	0.58	0.77	32500	320000000	128000000	1.2

Verifica a pressoflessione nel piano secondo D.M. 17-01-18 NTC §7.8.2.2.1 in combinazioni non sismiche, γM = 3

Comb.	Quota	N	M	σ0	Mu	c.s.	Verifica
SLU 82	-1.67	-74441	-11767.57	64739	29281.68	2.488	Si
SLU 82	1.32	-66396	-16220.75	57742	37046.21	2.284	Si
SLU 78	-1.67	-73894	-11916.58	64264	29892.75	2.509	Si
SLU 78	1.32	-65849	-16527.59	57267	37477.42	2.268	Si
SLU 77	-1.67	-74056	-12134.76	64404	29713.14	2.449	Si
SLU 77	1.32	-66011	-16677.46	57408	37351.05	2.24	Si
SLU 75	-1.67	-73011	-11584.57	63495	30855.42	2.663	Si
SLU 75	1.32	-64965	-16009.9	56498	38149.15	2.383	Si

Comb.	Quota	N	M	σ0	Mu	c.s.	Verifica
SLU 80	-1.67	-73315	-11818.48	63760	30527.11	2.583	Si
SLU 80	1.32	-65270	-16404.01	56763	37921.16	2.312	Si
SLU 81	-1.67	-74602	-11985.76	64879	29098.46	2.428	Si
SLU 81	1.32	-66557	-16370.63	57883	36916.22	2.255	Si
SLU 79	-1.67	-73477	-12036.67	63901	30351.34	2.522	Si
SLU 79	1.32	-65432	-16553.89	56904	37798.62	2.283	Si
SLU 84	-1.67	-75324	-12099.58	65507	28267.3	2.336	Si
SLU 84	1.32	-67279	-16738.44	58511	36322.77	2.17	Si
SLU 83	-1.67	-75486	-12317.77	65648	28078.22	2.279	Si
SLU 83	1.32	-67441	-16888.31	58651	36186.93	2.143	Si
SLU 74	-1.67	-73172	-11802.75	63636	30681.66	2.6	Si
SLU 74	1.32	-65127	-16159.78	56639	38028.63	2.353	Si

Verifica a pressoflessione nel piano secondo D.M. 17-01-18 NTC §7.8.2.2.1 in combinazioni sismiche, γM = 2

Comb.	Quota	N	M	σ0	Mu	c.s.	Verifica
SLV 10	-1.67	-47541	-49382.85	41345	60280.32	1.221	Si
SLV 10	1.32	-42832	-3558.21	37250	57060.74	16.036	Si
SLV 12	-1.67	-52162	26357.59	45364	62851.83	2.385	Si
SLV 12	1.32	-47020	-22959.15	40892	59954	2.611	Si
SLV 7	-1.67	-53366	33898.92	46411	63426.16	1.871	Si
SLV 7	1.32	-45698	-17517.16	39742	59092.09	3.373	Si
SLV 5	-1.67	-48745	-41841.52	42392	61006.43	1.458	Si
SLV 5	1.32	-41509	1883.77	36099	56047.74	29.753	Si
SLV 8	-1.67	-53366	33898.92	46411	63426.16	1.871	Si
SLV 8	1.32	-45698	-17517.16	39742	59092.09	3.373	Si
SLV 9	-1.67	-47541	-49382.85	41345	60280.32	1.221	Si
SLV 9	1.32	-42832	-3558.21	37250	57060.74	16.036	Si
SLV 11	-1.67	-52162	26357.59	45364	62851.83	2.385	Si
SLV 11	1.32	-47020	-22959.15	40892	59954	2.611	Si
SLV 13	-1.67	-47753	-31671.92	41530	60411.48	1.907	Si
SLV 13	1.32	-45841	-16697.52	39866	59187.64	3.545	Si
SLV 14	-1.67	-47753	-31671.92	41530	60411.48	1.907	Si
SLV 14	1.32	-45841	-16697.52	39866	59187.64	3.545	Si
SLV 6	-1.67	-48745	-41841.52	42392	61006.43	1.458	Si
SLV 6	1.32	-41509	1883.77	36099	56047.74	29.753	Si

Verifica a taglio nel piano secondo D.M. 17-01-18 (N.T.C.) §7.8.2.2.2 con rottura per scorrimento in combinazioni non sismiche, γM = 3

Comb.	Quota	N	V par	M	σ0	σN	I'	fvd	Vt scorr.	Vt fess.diag.	Vt,lim	c.s.	Verifica
SLU 81	-1.67	-74602	1467	-11985.76		64879	3.8329	10833	12457			8.49	Si
SLU 81	1.32	-66557	1467	-16370.63		57883	3.8329	10833	12457			8.49	Si
SLU 75	-1.67	-73011	1480	-11584.57		63495	3.8329	10833	12457			8.42	Si
SLU 75	1.32	-64965	1480	-16009.9		56498	3.8329	10833	12457			8.42	Si
SLU 83	-1.67	-75486	1529	-12317.77		65648	3.8329	10833	12457			8.15	Si
SLU 83	1.32	-67441	1529	-16888.31		58651	3.8329	10833	12457			8.15	Si
SLU 82	-1.67	-74441	1489	-11767.57		64739	3.8329	10833	12457			8.36	Si
SLU 82	1.32	-66396	1489	-16220.75		57742	3.8329	10833	12457			8.36	Si
SLU 77	-1.67	-74056	1519	-12134.76		64404	3.8329	10833	12457			8.2	Si
SLU 77	1.32	-66011	1519	-16677.46		57408	3.8329	10833	12457			8.2	Si
SLU 80	-1.67	-73315	1534	-11818.48		63760	3.8329	10833	12457			8.12	Si
SLU 80	1.32	-65270	1534	-16404.01		56763	3.8329	10833	12457			8.12	Si
SLU 76	-1.67	-72324	1487	-11341.02		62898	3.8329	10833	12457			8.38	Si
SLU 76	1.32	-64279	1487	-15786.41		55901	3.8329	10833	12457			8.38	Si
SLU 84	-1.67	-75324	1551	-12099.58		65507	3.8329	10833	12457			8.03	Si
SLU 84	1.32	-67279	1551	-16738.44		58511	3.8329	10833	12457			8.03	Si
SLU 78	-1.67	-73894	1542	-11916.58		64264	3.8329	10833	12457			8.08	Si
SLU 78	1.32	-65849	1542	-16527.59		57267	3.8329	10833	12457			8.08	Si
SLU 79	-1.67	-73477	1511	-12036.67		63901	3.8329	10833	12457			8.25	Si
SLU 79	1.32	-65432	1511	-16553.89		56904	3.8329	10833	12457			8.25	Si

Verifica a taglio nel piano secondo D.M. 17-01-18 (N.T.C.) §7.8.2.2.2 con rottura per scorrimento in combinazioni sismiche, γM = 2

Comb.	Quota	N	V par	M	σ0	σN	I'	fvd	Vt scorr.	Vt fess.diag.	Vt,lim	c.s.	Verifica
SLV 5	-1.67	-48745	-14591	-41841.52		51189	3.1742	16250	15474			1.06	Si
SLV 5	1.32	-41509	-15642	1883.77		36099	3.8329	15553	17884			1.14	Si
SLV 6	-1.67	-48745	-14591	-41841.52		51189	3.1742	16250	15474			1.06	Si
SLV 6	1.32	-41509	-15642	1883.77		36099	3.8329	15553	17884			1.14	Si
SLV 7	-1.67	-53366	16726	33898.92		46411	3.8329	16250	18685			1.12	Si
SLV 7	1.32	-45698	16415	-17517.16		39742	3.8329	16250	18685			1.14	Si
SLV 10	-1.67	-47541	-14856	-49382.85		60184	2.6331	16250	12836			0.86	No, Vu<V
SLV 10	1.32	-42832	-14545	-3558.21		37250	3.8329	15783	18149			1.25	Si
SLV 11	-1.67	-52162	16461	26357.59		45364	3.8329	16250	18685			1.14	Si
SLV 11	1.32	-47020	17512	-22959.15		40892	3.8329	16250	18685			1.07	Si
SLV 16	-1.67	-49140	5191	-8949.79		42735	3.8329	16250	18685			3.6	Si
SLV 16	1.32	-47097	7572	-22517.8		40959	3.8329	16250	18685			2.47	Si
SLV 15	-1.67	-49140	5191	-8949.79		42735	3.8329	16250	18685			3.6	Si
SLV 15	1.32	-47097	7572	-22517.8		40959	3.8329	16250	18685			2.47	Si
SLV 8	-1.67	-53366	16726	33898.92		46411	3.8329	16250	18685			1.12	Si
SLV 8	1.32	-45698	16415	-17517.16		39742	3.8329	16250	18685			1.14	Si
SLV 9	-1.67	-47541	-14856	-49382.85		60184	2.6331	16250	12836			0.86	No, Vu<V
SLV 9	1.32	-42832	-14545	-3558.21		37250	3.8329	15783	18149			1.25	Si
SLV 12	-1.67	-52162	16461	26357.59		45364	3.8329	16250	18685			1.14	Si
SLV 12	1.32	-47020	17512	-22959.15		40892	3.8329	16250	18685			1.07	Si

Verifica a pressoflessione fuori piano D.M. 17-01-18 (N.T.C.)

quota -0.175 Wa 0.05 denominatore 8 γM = 2

Comb.	fd	Sa	σ0	N	M	Mc	Coeff.s.	Verifica
SLV 10	143750	0.24	38596	-44380	188.37	4554.22	24.18	Si
SLV 9	143750	0.24	38596	-44380	188.37	4554.22	24.18	Si
SLV 6	143750	0.24	38679	-44475	188.37	4559.49	24.21	Si
SLV 5	143750	0.24	38679	-44475	188.37	4559.49	24.21	Si

Comb.	fd	Sa	σ0	N	M	Mc	Coeff.s.	Verifica
SLV 14	143750	0.24	40449	-46510	188.37	4667.06	24.78	Si
SLV 13	143750	0.24	40449	-46510	188.37	4667.06	24.78	Si
SLV 2	143750	0.24	40725	-46829	188.37	4683.08	24.86	Si
SLV 1	143750	0.24	40725	-46829	188.37	4683.08	24.86	Si
SLV 15	143750	0.24	42120	-48432	188.37	4760.52	25.27	Si
SLV 16	143750	0.24	42120	-48432	188.37	4760.52	25.27	Si

Verifica dei meccanismi locali di collasso con analisi cinematica lineare

forza di aggancio al piano = 0 quota mezzeria = -0.175 Wa = 0.05 Ta = 0.0498

Comb.	N top	N base	V orto	α0	M*	e*	a0*	aLim	Verifica
SLV 15	-47097	-49140	147	0.05	5279.1	0.972	0.7526	4.54426	No
SLV 16	-47097	-49140	147	0.05	5279.1	0.972	0.7526	4.54426	No
SLV 2	-41432	-51767	-144	0.05	4702.3	0.969	0.7565	4.54426	No
SLV 1	-41432	-51767	-144	0.05	4702.3	0.969	0.7565	4.54426	No
SLV 13	-45841	-47753	131	0.051	5151.1	0.971	0.75816	4.54426	No
SLV 14	-45841	-47753	131	0.051	5151.1	0.971	0.75816	4.54426	No
SLV 3	-42689	-53153	-128	0.051	4830.2	0.969	0.76114	4.54426	No
SLV 4	-42689	-53153	-128	0.051	4830.2	0.969	0.76114	4.54426	No
SLV 11	-47020	-52162	70	0.052	5271.2	0.972	0.77564	4.18901	No
SLV 12	-47020	-52162	70	0.052	5271.2	0.972	0.77564	4.18901	No

Tabella dei coefficienti di sicurezza minimi

Stato limite	Coeff.s.	Comb.	Verifica
PF_SLU	2.143	SLU 83	Si
V_SLU	8.029	SLU 84	Si
PF_SLV	1.221	SLV 9	Si
V_SLV	0.864	SLV 9	No
PFFP_SLV	24.178	SLV 9	Si
R_SLV	0.166	SLV 15	No

Maschio 45

Verifiche condotte secondo D.M. 17-01-18 (N.T.C.)

Dati geometrici

X ini.	Y ini.	X fin.	Y fin.	Quota i.	Quota.s	l	Sp.	h netta	h ini.	h fin.	a	a.s.,sx	a.s.,dx
-5.083	6.101	-5.083	6.79	L1	L3	0.689	0.45	2.99	2.99	2.99			

Caratteristiche del materiale

(Circolare 7 21-01-19 C8.5.I) Muratura in mattoni pieni e malta di calce LC2_Corti

fb	fk	fvk0	fmedio	τ0	fv0	μ	ϕ	fv,lim	E	G	FC
600000			345000	9000	20000	0.58	0.77	32500	320000000	128000000	1.2

Verifica a pressoflessione nel piano secondo D.M. 17-01-18 NTC §7.8.2.2.1 in combinazioni non sismiche, γM = 3

Comb.	Quota	N	M	σ0	Mu	c.s.	Verifica
SLU 78	-1.67	-19958	378.56	64397	1439.51	3.803	Si
SLU 78	1.32	-17790	-898.67	57400	1809.3	2.013	Si
SLU 75	-1.67	-19797	380.42	63878	1471.33	3.868	Si
SLU 75	1.32	-17629	-896.95	56882	1831.6	2.042	Si
SLU 84	-1.67	-20359	387.23	65689	1357.19	3.505	Si
SLU 84	1.32	-18190	-922.75	58692	1750.66	1.897	Si
SLU 83	-1.67	-20340	384.06	65630	1361.03	3.544	Si
SLU 83	1.32	-18172	-920.7	58634	1753.43	1.904	Si
SLU 79	-1.67	-19781	371.72	63825	1474.53	3.967	Si
SLU 79	1.32	-17613	-887.99	56829	1833.84	2.065	Si
SLU 80	-1.67	-19799	374.89	63884	1470.97	3.924	Si
SLU 80	1.32	-17631	-890.04	56887	1831.35	2.058	Si
SLU 74	-1.67	-19779	377.25	63819	1474.89	3.91	Si
SLU 74	1.32	-17611	-894.9	56823	1834.09	2.049	Si
SLU 77	-1.67	-19940	375.39	64338	1443.15	3.844	Si
SLU 77	1.32	-17772	-896.62	57341	1811.86	2.021	Si
SLU 81	-1.67	-20180	385.92	65112	1394.52	3.614	Si
SLU 81	1.32	-18011	-918.98	58115	1777.41	1.934	Si
SLU 82	-1.67	-20198	389.09	65170	1390.76	3.574	Si
SLU 82	1.32	-18029	-921.03	58174	1774.73	1.927	Si

Verifica a pressoflessione nel piano secondo D.M. 17-01-18 NTC §7.8.2.2.1 in combinazioni sismiche, γM = 2

Comb.	Quota	N	M	σ0	Mu	c.s.	Verifica
SLV 11	-1.67	-24073	916.92	77674	3020.03	3.294	Si
SLV 11	1.32	-21908	-1314.83	70689	3179.74	2.418	Si
SLV 7	-1.67	-23876	1555.91	77036	3038.14	1.953	Si
SLV 7	1.32	-20063	-1897.39	64734	3248.58	1.712	Si
SLV 8	-1.67	-23876	1555.91	77036	3038.14	1.953	Si
SLV 8	1.32	-20063	-1897.39	64734	3248.58	1.712	Si
SLV 3	-1.67	-16524	1625.95	53316	3207.31	1.973	Si
SLV 3	1.32	-11713	-1889.94	37793	2785.92	1.474	Si
SLV 1	-1.67	-10420	1046.99	33622	2600.94	2.484	Si
SLV 1	1.32	-6402	-1301	20656	1831.85	1.408	Si
SLV 12	-1.67	-24073	916.92	77674	3020.03	3.294	Si
SLV 12	1.32	-21908	-1314.83	70689	3179.74	2.418	Si
SLV 2	-1.67	-10420	1046.99	33622	2600.94	2.484	Si
SLV 2	1.32	-6402	-1301	20656	1831.85	1.408	Si
SLV 9	-1.67	-3727	-1012.95	12026	1157.18	1.142	Si
SLV 9	1.32	-4204	648.31	13565	1287.01	1.985	Si
SLV 10	-1.67	-3727	-1012.95	12026	1157.18	1.142	Si
SLV 10	1.32	-4204	648.31	13565	1287.01	1.985	Si

Comb.	Quota	N	M	σ0	Mu	c.s.	Verifica
SLV 4	-1.67	-16524	1625.95	53316	3207.31	1.973	Si
SLV 4	1.32	-11713	-1889.94	37793	2785.92	1.474	Si

Verifica a taglio nel piano secondo D.M. 17-01-18 (N.T.C.) §7.8.2.2.2 con rottura per scorrimento in combinazioni non sismiche, γM = 3

Comb.	Quota	N	V par	M	σ0	σN	I'	fvd	Vt scorr.	Vt fess.diag.	Vt,lim	c.s.	Verifica
SLU 73	-1.67	-19490	424	380.72		62886	0.6887	10833	3358			7.91	Si
SLU 73	1.32	-17321	424	-887.97		55889	0.6887	10833	3358			7.91	Si
SLU 82	-1.67	-20198	438	389.09		65170	0.6887	10833	3358			7.66	Si
SLU 82	1.32	-18029	438	-921.03		58174	0.6887	10833	3358			7.66	Si
SLU 76	-1.67	-19651	424	378.86		63405	0.6887	10833	3358			7.91	Si
SLU 76	1.32	-17482	424	-889.69		56408	0.6887	10833	3358			7.91	Si
SLU 84	-1.67	-20359	438	387.23		65689	0.6887	10833	3358			7.66	Si
SLU 84	1.32	-18190	438	-922.75		58692	0.6887	10833	3358			7.66	Si
SLU 74	-1.67	-19779	425	377.25		63819	0.6887	10833	3358			7.89	Si
SLU 74	1.32	-17611	425	-894.9		56823	0.6887	10833	3358			7.89	Si
SLU 75	-1.67	-19797	427	380.42		63878	0.6887	10833	3358			7.86	Si
SLU 75	1.32	-17629	427	-896.95		56882	0.6887	10833	3358			7.86	Si
SLU 81	-1.67	-20180	436	385.92		65112	0.6887	10833	3358			7.69	Si
SLU 81	1.32	-18011	436	-918.98		58115	0.6887	10833	3358			7.69	Si
SLU 77	-1.67	-19940	425	375.39		64338	0.6887	10833	3358			7.89	Si
SLU 77	1.32	-17772	425	-896.62		57341	0.6887	10833	3358			7.89	Si
SLU 78	-1.67	-19958	427	378.56		64397	0.6887	10833	3358			7.86	Si
SLU 78	1.32	-17790	427	-898.67		57400	0.6887	10833	3358			7.86	Si
SLU 83	-1.67	-20340	436	384.06		65630	0.6887	10833	3358			7.69	Si
SLU 83	1.32	-18172	436	-920.7		58634	0.6887	10833	3358			7.69	Si

Verifica a taglio nel piano secondo D.M. 17-01-18 (N.T.C.) §7.8.2.2.2 con rottura per scorrimento in combinazioni sismiche, γM = 2

Comb.	Quota	N	V par	M	σ0	σN	I'	fvd	Vt scorr.	Vt fess.diag.	Vt,lim	c.s.	Verifica
SLV 7	-1.67	-23876	1095	1555.91		77036	0.6887	16250	5036			4.6	Si
SLV 7	1.32	-20063	530	-1897.39		64734	0.6887	16250	5036			9.5	Si
SLV 3	-1.67	-16524	1533	1625.95		53316	0.6887	16250	5036			3.29	Si
SLV 3	1.32	-11713	658	-1889.94		47410	0.549	16250	4015			6.1	Si
SLV 8	-1.67	-23876	1095	1555.91		77036	0.6887	16250	5036			4.6	Si
SLV 8	1.32	-20063	530	-1897.39		64734	0.6887	16250	5036			9.5	Si
SLV 4	-1.67	-16524	1533	1625.95		53316	0.6887	16250	5036			3.29	Si
SLV 4	1.32	-11713	658	-1889.94		47410	0.549	16250	4015			6.1	Si
SLV 14	-1.67	-11079	-933	-1082.99		35747	0.6887	15483	4798			5.14	Si
SLV 14	1.32	-12554	-59	640.86		40506	0.6887	16250	5036			85.34	Si
SLV 2	-1.67	-10420	1252	1046.99		33622	0.6887	15058	4667			3.73	Si
SLV 2	1.32	-6402	577	-1301		33599	0.4234	15053	2868			4.97	Si
SLV 1	-1.67	-10420	1252	1046.99		33622	0.6887	15058	4667			3.73	Si
SLV 1	1.32	-6402	577	-1301		33599	0.4234	15053	2868			4.97	Si
SLV 9	-1.67	-3727	-495	-1012.95		38034	0.2178	15940	1562			3.15	Si
SLV 9	1.32	-4204	69	648.31		16377	0.5705	11609	2980			43.14	Si
SLV 13	-1.67	-11079	-933	-1082.99		35747	0.6887	15483	4798			5.14	Si
SLV 13	1.32	-12554	-59	640.86		40506	0.6887	16250	5036			85.34	Si
SLV 10	-1.67	-3727	-495	-1012.95		38034	0.2178	15940	1562			3.15	Si
SLV 10	1.32	-4204	69	648.31		16377	0.5705	11609	2980			43.14	Si

Verifica a pressoflessione fuori piano D.M. 17-01-18 (N.T.C.)

quota -0.175 Wa 0.08 denominatore 8 γM = 2

Comb.	fd	Sa	σ0	N	M	Mc	Coeff.s.	Verifica
SLV 9	143750	0.24	12795	-3966	50.77	798.81	15.73	Si
SLV 10	143750	0.24	12795	-3966	50.77	798.81	15.73	Si
SLV 6	143750	0.24	17592	-5452	50.77	1050.13	20.68	Si
SLV 5	143750	0.24	17592	-5452	50.77	1050.13	20.68	Si
SLV 13	143750	0.24	25852	-8012	50.77	1421.32	28	Si
SLV 14	143750	0.24	25852	-8012	50.77	1421.32	28	Si
SLV 15	143750	0.24	41841	-12967	50.77	1918.58	37.79	Si
SLV 16	143750	0.24	41841	-12967	50.77	1918.58	37.79	Si
SLV 1	143750	0.24	41842	-12968	50.77	1918.61	37.79	Si
SLV 2	143750	0.24	41842	-12968	50.77	1918.61	37.79	Si

Verifica dei meccanismi locali di collasso con analisi cinematica lineare

forza di aggancio al piano = 0 quota mezzeria = -0.175 Wa = 0.08 Ta = 0.0332

Comb.	N top	N base	V orto	α0	M*	e*	a0*	aLim	Verifica
SLV 1	-6402	-10420	-206	0.056	782.7	0.951	0.84793	3.6078	No
SLV 2	-6402	-10420	-206	0.056	782.7	0.951	0.84793	3.6078	No
SLV 3	-11713	-16524	-190	0.065	1323	0.97	0.97537	3.6078	No
SLV 4	-11713	-16524	-190	0.065	1323	0.97	0.97537	3.6078	No
SLV 14	-12554	-11079	189	0.066	1408.6	0.972	0.98407	3.6078	No
SLV 13	-12554	-11079	189	0.066	1408.6	0.972	0.98407	3.6078	No
SLV 16	-17865	-17183	205	0.068	1949.6	0.979	1.0042	3.6078	No
SLV 15	-17865	-17183	205	0.068	1949.6	0.979	1.0042	3.6078	No
SLV 6	-2359	-3530	-85	0.068	374.3	0.912	1.08692	3.42705	No
SLV 5	-2359	-3530	-85	0.068	374.3	0.912	1.08692	3.42705	No

Tabella dei coefficienti di sicurezza minimi

Stato limite	Coeff.s.	Comb.	Verifica
PF_SLU	1.897	SLU 84	Si
V_SLU	7.663	SLU 82	Si
PF_SLV	1.142	SLV 9	Si
V_SLV	3.154	SLV 9	Si
PFFP_SLV	15.734	SLV 9	Si
R_SLV	0.235	SLV 1	No

Maschio 46

Verifiche condotte secondo D.M. 17-01-18 (N.T.C.)

Dati geometrici

X ini.	Y ini.	X fin.	Y fin.	Quota i.	Quota.s	l	Sp.	h netta	h ini.	h fin.	a	a.s.,sx	a.s.,dx
-6.497	-3.288	-3.197	-3.288	L1	L3	3.3	0.45	2.99	2.99	2.99			

Caratteristiche del materiale

(Circolare 7 21-01-19 C8.5.I) Muratura in mattoni pieni e malta di calce LC2_Corti

fb	fk	fvk0	fmedio	τ0	fv0	μ	ϕ	fv,lim	E	G	FC
600000			345000	9000	20000	0.58	0.77	32500	320000000	128000000	1.2

Verifica a pressoflessione nel piano secondo D.M. 17-01-18 NTC §7.8.2.2.1 in combinazioni non sismiche, γM = 3

Comb.	Quota	N	M	σ0	Mu	c.s.	Verifica
SLU 83	0.33	-37577	-12716.51	25304	42741.53	3.361	Si
SLU 83	0.73	-36294	-13628.59	24441	41917.59	3.076	Si
SLU 77	0.33	-36150	-12390.69	24343	41821.96	3.375	Si
SLU 77	0.73	-34867	-13355.7	23480	40948.08	3.066	Si
SLU 79	0.33	-35964	-12281.93	24218	41697.93	3.395	Si
SLU 79	0.73	-34681	-13252.73	23354	40817.55	3.08	Si
SLU 69	0.33	-31990	-11326.87	21542	38824.98	3.428	Si
SLU 69	0.73	-30708	-12241.57	20679	37805.57	3.088	Si
SLU 74	0.33	-35980	-12369.35	24229	41709.18	3.372	Si
SLU 74	0.73	-34698	-13254.09	23366	40829.38	3.081	Si
SLU 56	0.33	-32690	-11397.02	22013	39361.79	3.454	Si
SLU 56	0.73	-31407	-12311.7	21149	38366.84	3.116	Si
SLU 48	0.33	-28530	-10333.19	19212	35972.21	3.481	Si
SLU 48	0.73	-27248	-11197.57	18349	34831.73	3.111	Si
SLU 81	0.33	-37408	-12695.18	25190	42635.34	3.358	Si
SLU 81	0.73	-36125	-13526.98	24327	41805.48	3.091	Si
SLU 71	0.33	-31804	-11218.1	21417	38679.84	3.448	Si
SLU 71	0.73	-30522	-12138.6	20553	37653.92	3.102	Si
SLU 66	0.33	-31821	-11305.53	21428	38693	3.422	Si
SLU 66	0.73	-30539	-12139.96	20565	37667.66	3.103	Si

Verifica a pressoflessione nel piano secondo D.M. 17-01-18 NTC §7.8.2.2.1 in combinazioni sismiche, γM = 2

Comb.	Quota	N	M	σ0	Mu	c.s.	Verifica
SLV 13	0.33	-31100	-3421.62	20943	42519.95	12.427	Si
SLV 13	0.73	-30098	-12184.27	20268	41423.84	3.4	Si
SLV 2	0.33	-26786	-18764.18	18038	37672.18	2.008	Si
SLV 2	0.73	-26143	-10690.25	17604	36920.45	3.454	Si
SLV 10	0.33	-39648	-14416.85	26699	51125.03	3.546	Si
SLV 10	0.73	-39154	-16718.47	26366	50663.55	3.03	Si
SLV 3	0.33	-18164	-13942.47	12232	26970.89	1.934	Si
SLV 3	0.73	-17193	-6355.58	11578	25681.09	4.041	Si
SLV 9	0.33	-39648	-14416.85	26699	51125.03	3.546	Si
SLV 9	0.73	-39154	-16718.47	26366	50663.55	3.03	Si
SLV 1	0.33	-26786	-18764.18	18038	37672.18	2.008	Si
SLV 1	0.73	-26143	-10690.25	17604	36920.45	3.454	Si
SLV 6	0.33	-38354	-19019.62	25828	49907.47	2.624	Si
SLV 6	0.73	-37968	-16270.27	25567	49537.84	3.045	Si
SLV 14	0.33	-31100	-3421.62	20943	42519.95	12.427	Si
SLV 14	0.73	-30098	-12184.27	20268	41423.84	3.4	Si
SLV 4	0.33	-18164	-13942.47	12232	26970.89	1.934	Si
SLV 4	0.73	-17193	-6355.58	11578	25681.09	4.041	Si
SLV 5	0.33	-38354	-19019.62	25828	49907.47	2.624	Si
SLV 5	0.73	-37968	-16270.27	25567	49537.84	3.045	Si

Verifica a taglio nel piano secondo D.M. 17-01-18 (N.T.C.) §7.8.2.2.2 con rottura per scorrimento in combinazioni non sismiche, γM = 3

Comb.	Quota	N	V par	M	σ0	σN	l'	fvd	Vt scorr.	Vt fess.diag.	Vt,lim	c.s.	Verifica
SLU 69	0.33	-31990	2251	-11326.87		21542	3.3	8428	12515			5.56	Si
SLU 69	0.73	-30708	2251	-12241.57		20679	3.3	8313	12344			5.48	Si
SLU 77	0.33	-36150	2377	-12390.69		24343	3.3	8801	13070			5.5	Si
SLU 77	0.73	-34867	2377	-13355.7		23480	3.3	8686	12899			5.43	Si
SLU 58	0.33	-32504	2265	-11288.25		21888	3.3	8474	12584			5.55	Si
SLU 58	0.73	-31221	2265	-12208.72		21024	3.3	8359	12413			5.48	Si
SLU 48	0.33	-28530	2125	-10333.19		19212	3.3	8117	12054			5.67	Si
SLU 48	0.73	-27248	2125	-11197.57		18349	3.3	8002	11883			5.59	Si
SLU 83	0.33	-37577	2244	-12716.51		25304	3.3	8929	13260			5.91	Si
SLU 83	0.73	-36294	2244	-13628.59		24441	3.3	8814	13089			5.83	Si
SLU 74	0.33	-35980	2176	-12369.35		24229	3.3	8786	13047			6	Si
SLU 74	0.73	-34698	2176	-13254.09		23366	3.3	8671	12876			5.92	Si
SLU 71	0.33	-31804	2265	-11218.1		21417	3.3	8411	12491			5.51	Si
SLU 71	0.73	-30522	2265	-12138.6		20553	3.3	8296	12320			5.44	Si
SLU 50	0.33	-28344	2140	-10224.43		19087	3.3	8100	12029			5.62	Si
SLU 50	0.73	-27062	2140	-11094.6		18223	3.3	7985	11858			5.54	Si
SLU 56	0.33	-32690	2251	-11397.02		22013	3.3	8491	12609			5.6	Si
SLU 56	0.73	-31407	2251	-12311.7		21149	3.3	8375	12438			5.53	Si
SLU 79	0.33	-35964	2391	-12281.93		24218	3.3	8785	13045			5.46	Si
SLU 79	0.73	-34681	2391	-13252.73		23354	3.3	8669	12874			5.38	Si

Verifica a taglio nel piano secondo D.M. 17-01-18 (N.T.C.) §7.8.2.2.2 con rottura per scorrimento in combinazioni sismiche, γM = 2

Comb.	Quota	N	V par	M	σ0	σN	l'	fvd	Vt scorr.	Vt fess.diag.	Vt,lim	c.s.	Verifica
SLV 11	0.33	-10910	9642	1655.53		7347	3.3	9803	14557			1.51	Si
SLV 11	0.73	-9324	7643	-2269.58		6279	3.3	9589	14240			1.86	Si
SLV 14	0.33	-31100	20695	-3421.62		20943	3.3	12522	18595			0.9	No, Vu<V
SLV 14	0.73	-30098	21318	-12184.27		20268	3.3	12387	18395			0.86	No, Vu<V
SLV 2	0.33	-26786	-19145	-18764.18		20897	2.8484	12513	16039			0.84	No, Vu<V

Comb.	Quota	N	V par	M	σ0	σN	l'	fvd	Vt scorr.	Vt fess.diag.	Vt,lim	c.s.	Verifica
SLV 2	0.73	-26143	-18565	-10690.25		17604	3.3	11854	17604			0.95	No, Vu<V
SLV 4	0.33	-18164	-17811	-13942.47		15248	2.6473	11383	13560			0.76	No, Vu<V
SLV 4	0.73	-17193	-18434	-6355.58		11578	3.3	10649	15814			0.86	No, Vu<V
SLV 3	0.33	-18164	-17811	-13942.47		15248	2.6473	11383	13560			0.76	No, Vu<V
SLV 3	0.73	-17193	-18434	-6355.58		11578	3.3	10649	15814			0.86	No, Vu<V
SLV 1	0.33	-26786	-19145	-18764.18		20897	2.8484	12513	16039			0.84	No, Vu<V
SLV 1	0.73	-26143	-18565	-10690.25		17604	3.3	11854	17604			0.95	No, Vu<V
SLV 16	0.33	-22479	22029	1400.1		15137	3.3	11361	16871			0.77	No, Vu<V
SLV 16	0.73	-21149	21450	-7849.6		14242	3.3	11182	16605			0.77	No, Vu<V
SLV 13	0.33	-31100	20695	-3421.62		20943	3.3	12522	18595			0.9	No, Vu<V
SLV 13	0.73	-30098	21318	-12184.27		20268	3.3	12387	18395			0.86	No, Vu<V
SLV 12	0.33	-10910	9642	1655.53		7347	3.3	9803	14557			1.51	Si
SLV 12	0.73	-9324	7643	-2269.58		6279	3.3	9589	14240			1.86	Si
SLV 15	0.33	-22479	22029	1400.1		15137	3.3	11361	16871			0.77	No, Vu<V
SLV 15	0.73	-21149	21450	-7849.6		14242	3.3	11182	16605			0.77	No, Vu<V

Verifica a pressoflessione fuori piano D.M. 17-01-18 (N.T.C.)

quota -0.175 Wa 0.08 denominatore 8 γM = 2

Comb.	fd	Sa	σ0	N	M	Mc	Coeff.s.	Verifica
SLV 7	143750	0.24	6217	-9232	243.27	1971.59	8.1	Si
SLV 8	143750	0.24	6217	-9232	243.27	1971.59	8.1	Si
SLV 12	143750	0.24	7712	-11453	243.27	2414.22	9.92	Si
SLV 11	143750	0.24	7712	-11453	243.27	2414.22	9.92	Si
SLV 4	143750	0.24	10329	-15338	243.27	3159.33	12.99	Si
SLV 3	143750	0.24	10329	-15338	243.27	3159.33	12.99	Si
SLV 15	143750	0.24	15313	-22739	243.27	4475.16	18.4	Si
SLV 16	143750	0.24	15313	-22739	243.27	4475.16	18.4	Si
SLV 1	143750	0.24	15348	-22792	243.27	4484	18.43	Si
SLV 2	143750	0.24	15348	-22792	243.27	4484	18.43	Si

Verifica dei meccanismi locali di collasso con analisi cinematica lineare

forza di aggancio al piano = 0 quota mezzeria = -0.175 Wa = 0.08 Ta = 0.0332

Comb.	N top	N base	V orto	α0	M*	e*	a0*	aLim	Verifica
SLV 8	2767	-12549	2398	0	0	0	0	3.42705	No, Trazione
SLV 2	-18431	-27352	-2273	0	2509.7	0.932	0	3.6078	No
SLV 12	1628	-14091	2410	0	0	0	0	3.42705	No, Trazione
SLV 5	-31890	-38090	-4768	0	3873.8	0.953	0	3.42705	No
SLV 6	-31890	-38090	-4768	0	3873.8	0.953	0	3.42705	No
SLV 11	1628	-14091	2410	0	0	0	0	3.42705	No, Trazione
SLV 9	-33029	-39632	-4756	0	3989.5	0.954	0	3.42705	No
SLV 7	2767	-12549	2398	0	0	0	0	3.42705	No, Trazione
SLV 10	-33029	-39632	-4756	0	3989.5	0.954	0	3.42705	No
SLV 1	-18431	-27352	-2273	0	2509.7	0.932	0	3.6078	No

Tabella dei coefficienti di sicurezza minimi

Stato limite	Coeff.s.	Comb.	Verifica
PF_SLU	3.066	SLU 77	Si
V_SLU	5.384	SLU 79	Si
PF_SLV	1.934	SLV 3	Si
V_SLV	0.761	SLV 3	No
PFFP_SLV	8.105	SLV 7	Si
R_SLV	0	SLV 12	No

Maschio 47

Verifiche condotte secondo D.M. 17-01-18 (N.T.C.)

Dati geometrici

X ini.	Y ini.	X fin.	Y fin.	Quota i.	Quota.s	l	Sp.	h netta	h ini.	h fin.	a	a.s.,sx	a.s.,dx
-2.197	-3.288	0.108	-3.288	L1	L3	2.305	0.45	2.99	2.99	2.99			

Caratteristiche del materiale

(Circolare 7 21-01-19 C8.5.I) Muratura in mattoni pieni e malta di calce LC2_Corti

fb	fk	fvk0	fmedio	τ0	fv0	μ	ϕ	fv,lim	E	G	FC
600000			345000	9000	20000	0.58	0.77	32500	320000000	128000000	1.2

Verifica a pressoflessione nel piano secondo D.M. 17-01-18 NTC §7.8.2.2.1 in combinazioni non sismiche, γM = 3

Comb.	Quota	N	M	σ0	Mu	c.s.	Verifica
SLU 69	0.33	-20979	1884	20225	18174.9	9.647	Si
SLU 69	0.73	-17629	222.05	16996	16078.41	72.41	Si
SLU 72	0.33	-21770	1912.84	20988	18625.34	9.737	Si
SLU 72	0.73	-18522	4.48	17857	16667.4	1000	Si
SLU 47	0.33	-20026	1827.88	19307	17609.6	9.634	Si
SLU 47	0.73	-17068	-51.65	16455	15697.14	303.916	Si
SLU 46	0.33	-19546	1819.09	18845	17315.86	9.519	Si
SLU 46	0.73	-16511	100.36	15918	15310.63	152.552	Si
SLU 49	0.33	-19690	1884.92	18982	17404.21	9.233	Si
SLU 49	0.73	-16635	127.18	16038	15397.34	121.069	Si
SLU 50	0.33	-18611	1793.47	17942	16724.36	9.325	Si
SLU 50	0.73	-15508	302.92	14951	14592.66	48.174	Si
SLU 70	0.33	-21914	1944.15	21127	18705.47	9.621	Si
SLU 70	0.73	-18639	25.39	17970	16742.83	659.312	Si
SLU 48	0.33	-18755	1824.78	18081	16816.9	9.216	Si
SLU 48	0.73	-15625	323.83	15064	14677.7	45.325	Si
SLU 51	0.33	-19546	1853.62	18844	17315.34	9.341	Si
SLU 51	0.73	-16518	106.27	15925	15315.52	144.124	Si

Comb.	Quota	N	M	σ0	Mu	c.s.	Verifica
SLU 45	0.33	-18611	1758.94	17943	16724.9	9.508	Si
SLU 45	0.73	-15501	297.02	14945	14587.58	49.114	Si

Verifica a pressoflessione nel piano secondo D.M. 17-01-18 NTC §7.8.2.2.1 in combinazioni sismiche, γM = 2

Comb.	Quota	N	M	σ0	Mu	c.s.	Verifica
SLV 7	0.33	-3038	-2021.68	2929	3416.95	1.69	Si
SLV 7	0.73	-1713	-1717.05	1652	1947.9	1.134	Si
SLV 3	0.33	-6858	-4973.93	6612	7476.35	1.503	Si
SLV 3	0.73	-5060	-2431.17	4878	5598.43	2.303	Si
SLV 1	0.33	-13624	-4023.8	13135	14013.76	3.483	Si
SLV 1	0.73	-11170	-1744.23	10769	11738.85	6.73	Si
SLV 4	0.33	-6858	-4973.93	6612	7476.35	1.503	Si
SLV 4	0.73	-5060	-2431.17	4878	5598.43	2.303	Si
SLV 8	0.33	-3038	-2021.68	2929	3416.95	1.69	Si
SLV 8	0.73	-1713	-1717.05	1652	1947.9	1.134	Si
SLV 16	0.33	-18495	6628.16	17831	18204.81	2.747	Si
SLV 16	0.73	-15867	1898.96	15297	15997.05	8.424	Si
SLV 15	0.33	-18495	6628.16	17831	18204.81	2.747	Si
SLV 15	0.73	-15867	1898.96	15297	15997.05	8.424	Si
SLV 14	0.33	-25261	7578.29	24353	23310.33	3.076	Si
SLV 14	0.73	-21977	2585.9	21188	20936.49	8.096	Si
SLV 2	0.33	-13624	-4023.8	13135	14013.76	3.483	Si
SLV 2	0.73	-11170	-1744.23	10769	11738.85	6.73	Si
SLV 13	0.33	-25261	7578.29	24353	23310.33	3.076	Si
SLV 13	0.73	-21977	2585.9	21188	20936.49	8.096	Si

Verifica a taglio nel piano secondo D.M. 17-01-18 (N.T.C.) §7.8.2.2.2 con rottura per scorrimento in combinazioni non sismiche, γM = 3

Comb.	Quota	N	V par	M	σ0	σN	l'	fvd	Vt scorr.	Vt fess.diag.	Vt,lim	c.s.	Verifica
SLU 77	0.33	-23574	-1851	1853.66		22728	2.305	8586	8906			4.81	Si
SLU 77	0.73	-20003	-1869	17.4		19285	2.305	8127	8430			4.51	Si
SLU 64	0.33	-20549	-1842	1721.02		19811	2.305	8197	8502			4.62	Si
SLU 64	0.73	-17265	-1858	147.51		16645	2.305	7775	8064			4.34	Si
SLU 60	0.33	-22032	-1846	1618.46		21241	2.305	8388	8700			4.71	Si
SLU 60	0.73	-18652	-1863	-43.07		17982	2.305	7953	8249			4.43	Si
SLU 81	0.33	-24257	-1953	1677.68		23386	2.305	8674	8997			4.61	Si
SLU 81	0.73	-20656	-1972	-144.85		19914	2.305	8211	8517			4.32	Si
SLU 45	0.33	-18611	-1718	1758.94		17943	2.305	7948	8244			4.8	Si
SLU 45	0.73	-15501	-1733	297.02		14945	2.305	7548	7829			4.52	Si
SLU 43	0.33	-18324	-1734	1661.8		17666	2.305	7911	8206			4.73	Si
SLU 43	0.73	-15261	-1749	249.29		14713	2.305	7517	7797			4.46	Si
SLU 83	0.33	-24400	-1900	1743.52		23524	2.305	8692	9016			4.74	Si
SLU 83	0.73	-20780	-1919	-118.04		20034	2.305	8227	8533			4.45	Si
SLU 53	0.33	-21207	-1796	1728.61		20445	2.305	8282	8590			4.78	Si
SLU 53	0.73	-17875	-1813	92.37		17233	2.305	7853	8146			4.49	Si
SLU 66	0.33	-20836	-1826	1818.16		20087	2.305	8234	8541			4.68	Si
SLU 66	0.73	-17505	-1842	195.23		16877	2.305	7806	8097			4.39	Si
SLU 74	0.33	-23431	-1904	1787.83		22590	2.305	8568	8887			4.67	Si
SLU 74	0.73	-19879	-1922	-9.42		19165	2.305	8111	8413			4.38	Si

Verifica a taglio nel piano secondo D.M. 17-01-18 (N.T.C.) §7.8.2.2.2 con rottura per scorrimento in combinazioni sismiche, γM = 2

Comb.	Quota	N	V par	M	σ0	σN	l'	fvd	Vt scorr.	Vt fess.diag.	Vt,lim	c.s.	Verifica
SLV 15	0.33	-18495	6404	6628.16		17831	2.305	11899	12343			1.93	Si
SLV 15	0.73	-15867	7285	1898.96		15297	2.305	11393	11817			1.62	Si
SLV 4	0.33	-6858	-11624	-4973.93		11890	1.2817	10711	6178			0.53	No, Vu<V
SLV 4	0.73	-5060	-11332	-2431.17		5577	2.016	9449	8572			0.76	No, Vu<V
SLV 14	0.33	-25261	8793	7578.29		24353	2.305	13204	13696			1.56	Si
SLV 14	0.73	-21977	8476	2585.9		21188	2.305	12571	13039			1.54	Si
SLV 16	0.33	-18495	6404	6628.16		17831	2.305	11899	12343			1.93	Si
SLV 16	0.73	-15867	7285	1898.96		15297	2.305	11393	11817			1.62	Si
SLV 13	0.33	-25261	8793	7578.29		24353	2.305	13204	13696			1.56	Si
SLV 13	0.73	-21977	8476	2585.9		21188	2.305	12571	13039			1.54	Si
SLV 1	0.33	-13624	-9234	-4023.8		13135	2.305	10960	11369			1.23	Si
SLV 1	0.73	-11170	-10141	-1744.23		10769	2.305	10487	10878			1.07	Si
SLV 3	0.33	-6858	-11624	-4973.93		11890	1.2817	10711	6178			0.53	No, Vu<V
SLV 3	0.73	-5060	-11332	-2431.17		5577	2.016	9449	8572			0.76	No, Vu<V
SLV 2	0.33	-13624	-9234	-4023.8		13135	2.305	10960	11369			1.23	Si
SLV 2	0.73	-11170	-10141	-1744.23		10769	2.305	10487	10878			1.07	Si
SLV 7	0.33	-3038	-8101	-2021.68		4621	1.4609	9257	6086			0.75	No, Vu<V
SLV 7	0.73	-1713	-6206	-1717.05		8443	0.451	10022	2034			0.33	No, Vu<V
SLV 8	0.33	-3038	-8101	-2021.68		4621	1.4609	9257	6086			0.75	No, Vu<V
SLV 8	0.73	-1713	-6206	-1717.05		8443	0.451	10022	2034			0.33	No, Vu<V

Verifica a pressoflessione fuori piano D.M. 17-01-18 (N.T.C.)

quota -0.175 Wa 0.08 denominatore 8 γM = 2

Comb.	fd	Sa	σ0	N	M	Mc	Coeff.s.	Verifica
SLV 8	143750	0.24	4563	-4733	169.92	1025.2	6.03	Si
SLV 7	143750	0.24	4563	-4733	169.92	1025.2	6.03	Si
SLV 4	143750	0.24	6759	-7011	169.92	1490.26	8.77	Si
SLV 3	143750	0.24	6759	-7011	169.92	1490.26	8.77	Si
SLV 11	143750	0.24	8902	-9234	169.92	1926.26	11.34	Si
SLV 12	143750	0.24	8902	-9234	169.92	1926.26	11.34	Si
SLV 2	143750	0.24	12981	-13465	169.92	2707.67	15.94	Si
SLV 1	143750	0.24	12981	-13465	169.92	2707.67	15.94	Si
SLV 15	143750	0.24	21223	-22014	169.92	4092.76	24.09	Si
SLV 16	143750	0.24	21223	-22014	169.92	4092.76	24.09	Si

Verifica dei meccanismi locali di collasso con analisi cinematica lineare

forza di aggancio al piano = 0 quota mezzeria = -0.175 Wa = 0.08 Ta = 0.0332

Comb.	N top	N base	V orto	α0	M*	e*	a0*	aLim	Verifica

Comb.	N top	N base	V orto	α0	M*	e*	a0*	aLim	Verifica
SLV 6	-19496	-29567	-2877	0	2423.6	0.948	0	3.42705	No
SLV 11	2802	-15019	1681	0	0	0	0	3.42705	No, Trazione
SLV 4	-1176	-5123	557	0	623.9	0.906	0	3.6078	No
SLV 3	-1176	-5123	557	0	623.9	0.906	0	3.6078	No
SLV 7	4908	-6768	1940	0	0	0	0	3.42705	No, Trazione
SLV 10	-21602	-37817	-3136	0	2637.5	0.952	0	3.42705	No
SLV 8	4908	-6768	1940	0	0	0	0	3.42705	No, Trazione
SLV 5	-19496	-29567	-2877	0	2423.6	0.948	0	3.42705	No
SLV 9	-21602	-37817	-3136	0	2637.5	0.952	0	3.42705	No
SLV 12	2802	-15019	1681	0	0	0	0	3.42705	No, Trazione

Tabella dei coefficienti di sicurezza minimi

Stato limite	Coeff.s.	Comb.	Verifica
PF_SLU	9.216	SLU 48	Si
V_SLU	4.32	SLU 81	Si
PF_SLV	1.134	SLV 7	Si
V_SLV	0.328	SLV 7	No
PFFP_SLV	6.034	SLV 7	Si
R_SLV	0	SLV 12	No

Maschio 48

Verifiche condotte secondo D.M. 17-01-18 (N.T.C.)

Dati geometrici

X ini.	Y ini.	X fin.	Y fin.	Quota i.	Quota.s	l	Sp.	h netta	h ini.	h fin.	a	a.s.,sx	a.s.,dx
-5.088	5.876	-2.913	5.876	L1	L3	2.175	0.45	2.99	2.99	2.99			

Caratteristiche del materiale

(Circolare 7 21-01-19 C8.5.I) Muratura in mattoni pieni e malta di calce LC2_Corti

fb	fk	fvk0	fmedio	τ0	fv0	μ	ϕ	fv,lim	E	G	FC
600000			345000	9000	20000	0.58	0.77	32500	320000000	128000000	1.2

Verifica a pressoflessione nel piano secondo D.M. 17-01-18 NTC §7.8.2.2.1 in combinazioni non sismiche, γM = 3

Comb.	Quota	N	M	σ0	Mu	c.s.	Verifica
SLU 46	0.33	-23523	-1859.63	24034	18033.77	9.698	Si
SLU 46	0.73	-22537	-3325.9	23026	17580.67	5.286	Si
SLU 72	0.33	-26493	-1872.86	27068	19237.4	10.272	Si
SLU 72	0.73	-25507	-3584.77	26060	18864.24	5.262	Si
SLU 78	0.33	-29938	-1961.55	30588	20331.95	10.365	Si
SLU 78	0.73	-28951	-3796.61	29580	20051.49	5.281	Si
SLU 67	0.33	-26421	-1959.55	26995	19210.99	9.804	Si
SLU 67	0.73	-25434	-3578.75	25986	18835.88	5.263	Si
SLU 69	0.33	-26701	-1893.92	27281	19312.8	10.197	Si
SLU 69	0.73	-25715	-3623.97	26273	18945.24	5.228	Si
SLU 49	0.33	-23790	-1820.87	24306	18151.53	9.969	Si
SLU 49	0.73	-22803	-3386.3	23298	17705.59	5.229	Si
SLU 71	0.33	-26507	-1845.98	27083	19242.59	10.424	Si
SLU 71	0.73	-25521	-3569.59	26075	18869.8	5.286	Si
SLU 51	0.33	-23595	-1772.94	24108	18065.9	10.19	Si
SLU 51	0.73	-22609	-3331.92	23100	17614.73	5.287	Si
SLU 48	0.33	-23804	-1794	24321	18157.76	10.121	Si
SLU 48	0.73	-22817	-3371.11	23312	17712.2	5.254	Si
SLU 70	0.33	-26687	-1920.79	27267	19307.69	10.052	Si
SLU 70	0.73	-25701	-3639.15	26259	18939.75	5.204	Si

Verifica a pressoflessione nel piano secondo D.M. 17-01-18 NTC §7.8.2.2.1 in combinazioni sismiche, γM = 2

Comb.	Quota	N	M	σ0	Mu	c.s.	Verifica
SLV 4	0.33	-23081	-5754.61	23582	20256.27	3.52	Si
SLV 4	0.73	-21714	-1020.41	22185	19326.24	18.94	Si
SLV 1	0.33	-15069	-5746.52	15396	14322.79	2.492	Si
SLV 1	0.73	-13565	-752.16	13860	13078.92	17.389	Si
SLV 14	0.33	-17464	2816.01	17843	16218.36	5.759	Si
SLV 14	0.73	-17313	-4264.26	17689	16102.23	3.776	Si
SLV 10	0.33	-7278	-171.43	7436	7433.45	43.36	Si
SLV 10	0.73	-6495	-2722.06	6636	6679.54	2.454	Si
SLV 5	0.33	-6560	-2740.19	6702	6742.66	2.461	Si
SLV 5	0.73	-5371	-1668.43	5487	5578.15	3.343	Si
SLV 13	0.33	-17464	2816.01	17843	16218.36	5.759	Si
SLV 13	0.73	-17313	-4264.26	17689	16102.23	3.776	Si
SLV 2	0.33	-15069	-5746.52	15396	14322.79	2.492	Si
SLV 2	0.73	-13565	-752.16	13860	13078.92	17.389	Si
SLV 9	0.33	-7278	-171.43	7436	7433.45	43.36	Si
SLV 9	0.73	-6495	-2722.06	6636	6679.54	2.454	Si
SLV 6	0.33	-6560	-2740.19	6702	6742.66	2.461	Si
SLV 6	0.73	-5371	-1668.43	5487	5578.15	3.343	Si
SLV 3	0.33	-23081	-5754.61	23582	20256.27	3.52	Si
SLV 3	0.73	-21714	-1020.41	22185	19326.24	18.94	Si

Verifica a taglio nel piano secondo D.M. 17-01-18 (N.T.C.) §7.8.2.2.2 con rottura per scorrimento in combinazioni non sismiche, γM = 3

Comb.	Quota	N	V par	M	σ0	σN	l'	fvd	Vt scorr.	Vt fess.diag.	Vt,lim	c.s.	Verifica
SLU 72	0.33	-26493	4289	-1872.86		27068	2.175	9165	8970			2.09	Si
SLU 72	0.73	-25507	4289	-3584.77		26060	2.175	9030	8838			2.06	Si
SLU 71	0.33	-26507	4318	-1845.98		27083	2.175	9167	8972			2.08	Si
SLU 71	0.73	-25521	4318	-3569.59		26075	2.175	9032	8840			2.05	Si
SLU 56	0.33	-27054	4244	-1834.76		27641	2.175	9241	9045			2.13	Si

Comb.	Quota	N	V par	M	σ0	σN	l'	fvd	Vt scorr.	Vt fess.diag.	Vt,lim	c.s.	Verifica
SLU 56	0.73	-26067	4244	-3528.58		26633	2.175	9107	8913			2.1	Si
SLU 83	0.33	-30884	4487	-1942.97		31555	2.175	9763	9555			2.13	Si
SLU 83	0.73	-29898	4487	-3734.14		30547	2.175	9628	9424			2.1	Si
SLU 79	0.33	-29758	4610	-1886.74		30404	2.175	9609	9405			2.04	Si
SLU 79	0.73	-28771	4610	-3727.05		29396	2.175	9475	9274			2.01	Si
SLU 78	0.33	-29938	4597	-1961.55		30588	2.175	9634	9429			2.05	Si
SLU 78	0.73	-28951	4597	-3796.61		29580	2.175	9499	9298			2.02	Si
SLU 70	0.33	-26687	4305	-1920.79		27267	2.175	9191	8996			2.09	Si
SLU 70	0.73	-25701	4305	-3639.15		26259	2.175	9057	8864			2.06	Si
SLU 80	0.33	-29744	4581	-1913.62		30389	2.175	9607	9403			2.05	Si
SLU 80	0.73	-28757	4581	-3742.23		29381	2.175	9473	9272			2.02	Si
SLU 69	0.33	-26701	4334	-1893.92		27281	2.175	9193	8998			2.08	Si
SLU 69	0.73	-25715	4334	-3623.97		26273	2.175	9059	8866			2.05	Si
SLU 77	0.33	-29952	4626	-1934.68		30602	2.175	9636	9431			2.04	Si
SLU 77	0.73	-28965	4626	-3781.43		29594	2.175	9501	9300			2.01	Si

Verifica a taglio nel piano secondo D.M. 17-01-18 (N.T.C.) §7.8.2.2.2 con rottura per scorrimento in combinazioni sismiche, γM = 2

Comb.	Quota	N	V par	M	σ0	σN	l'	fvd	Vt scorr.	Vt fess.diag.	Vt,lim	c.s.	Verifica
SLV 16	0.33	-25476	15078	2807.92		26029	2.175	13539	13251			0.88	No, Vu<V
SLV 16	0.73	-25461	17556	-4532.52		26014	2.175	13536	13249			0.75	No, Vu<V
SLV 7	0.33	-33266	9279	-2767.16		33989	2.175	15131	14810			1.6	Si
SLV 7	0.73	-32532	15898	-2562.61		33238	2.175	14981	14663			0.92	No, Vu<V
SLV 9	0.33	-7278	-3400	-171.43		7436	2.175	9821	9612			2.83	Si
SLV 9	0.73	-6495	-10019	-2722.06		7198	2.0052	9773	8818			0.88	No, Vu<V
SLV 8	0.33	-33266	9279	-2767.16		33989	2.175	15131	14810			1.6	Si
SLV 8	0.73	-32532	15898	-2562.61		33238	2.175	14981	14663			0.92	No, Vu<V
SLV 11	0.33	-33985	14914	-198.4		34723	2.175	15278	14953			1	Si
SLV 11	0.73	-33656	21804	-3616.25		34387	2.175	15211	14888			0.68	No, Vu<V
SLV 12	0.33	-33985	14914	-198.4		34723	2.175	15278	14953			1	Si
SLV 12	0.73	-33656	21804	-3616.25		34387	2.175	15211	14888			0.68	No, Vu<V
SLV 5	0.33	-6560	-9035	-2740.19		7255	2.0094	9784	8847			0.98	No, Vu<V
SLV 5	0.73	-5371	-15925	-1668.43		5487	2.175	9431	9230			0.58	No, Vu<V
SLV 6	0.33	-6560	-9035	-2740.19		7255	2.0094	9784	8847			0.98	No, Vu<V
SLV 6	0.73	-5371	-15925	-1668.43		5487	2.175	9431	9230			0.58	No, Vu<V
SLV 15	0.33	-25476	15078	2807.92		26029	2.175	13539	13251			0.88	No, Vu<V
SLV 15	0.73	-25461	17556	-4532.52		26014	2.175	13536	13249			0.75	No, Vu<V
SLV 10	0.33	-7278	-3400	-171.43		7436	2.175	9821	9612			2.83	Si
SLV 10	0.73	-6495	-10019	-2722.06		7198	2.0052	9773	8818			0.88	No, Vu<V

Verifica a pressoflessione fuori piano D.M. 17-01-18 (N.T.C.)

quota -0.175 Wa 0.08 denominatore 8 γM = 2

Comb.	fd	Sa	σ0	N	M	Mc	Coeff.s.	Verifica
SLV 9	143750	0.24	6445	-6308	160.33	1344.41	8.39	Si
SLV 10	143750	0.24	6445	-6308	160.33	1344.41	8.39	Si
SLV 5	143750	0.24	8320	-8143	160.33	1707.46	10.65	Si
SLV 6	143750	0.24	8320	-8143	160.33	1707.46	10.65	Si
SLV 13	143750	0.24	12494	-12229	160.33	2470.15	15.41	Si
SLV 14	143750	0.24	12494	-12229	160.33	2470.15	15.41	Si
SLV 1	143750	0.24	18745	-18347	160.33	3494.73	21.8	Si
SLV 2	143750	0.24	18745	-18347	160.33	3494.73	21.8	Si
SLV 15	143750	0.24	19555	-19140	160.33	3617.19	22.56	Si
SLV 16	143750	0.24	19555	-19140	160.33	3617.19	22.56	Si

Verifica dei meccanismi locali di collasso con analisi cinematica lineare

forza di aggancio al piano = 0 quota mezzeria = -0.175 Wa = 0.08 Ta = 0.0332

Comb.	N top	N base	V orto	α0	M*	e*	a0*	aLim	Verifica
SLV 3	-15900	-31852	-165	0.077	2033.8	0.943	1.18775	3.6078	No
SLV 4	-15900	-31852	-165	0.077	2033.8	0.943	1.18775	3.6078	No
SLV 15	-24176	-15833	-97	0.079	2874.1	0.958	1.19963	3.6078	No
SLV 16	-24176	-15833	-97	0.079	2874.1	0.958	1.19963	3.6078	No
SLV 8	-24998	-34512	-169	0.076	2957.7	0.959	1.15705	3.42705	No
SLV 7	-24998	-34512	-169	0.076	2957.7	0.959	1.15705	3.42705	No
SLV 12	-27481	-29706	-148	0.077	3210.2	0.962	1.16249	3.42705	No
SLV 11	-27481	-29706	-148	0.077	3210.2	0.962	1.16249	3.42705	No
SLV 13	-18860	-8747	-73	0.081	2334	0.949	1.24159	3.6078	No
SLV 14	-18860	-8747	-73	0.081	2334	0.949	1.24159	3.6078	No

Tabella dei coefficienti di sicurezza minimi

Stato limite	Coeff.s.	Comb.	Verifica
PF_SLU	5.204	SLU 70	Si
V_SLU	2.01	SLU 77	Si
PF_SLV	2.454	SLV 9	Si
V_SLV	0.58	SLV 5	No
PFFP_SLV	8.385	SLV 9	Si
R_SLV	0.329	SLV 3	No

Maschio 49

Verifiche condotte secondo D.M. 17-01-18 (N.T.C.)

Dati geometrici

X ini.	Y ini.	X fin.	Y fin.	Quota i.	Quota.s	l	Sp.	h netta	h ini.	h fin.	a	a.s.,sx	a.s.,dx
-1.913	5.876	-0.123	5.876	L1	L3	1.79	0.45	2.99	2.99	2.99			

Caratteristiche del materiale

(Circolare 7 21-01-19 C8.5.I) Muratura in mattoni pieni e malta di calce LC2_Corti

fb	fk	fvk0	fmedio	τ0	fv0	μ	ϕ	fv,lim	E	G	FC
600000			345000	9000	20000	0.58	0.77	32500	320000000	128000000	1.2

Verifica a pressoflessione nel piano secondo D.M. 17-01-18 NTC §7.8.2.2.1 in combinazioni non sismiche, γM = 3

Comb.	Quota	N	M	σ0	Mu	c.s.	Verifica
SLU 45	0.33	-19971	669.79	24794	12433.84	18.564	Si
SLU 45	0.73	-18411	697.67	22857	11854.44	16.991	Si
SLU 51	0.33	-20010	720.23	24842	12447.43	17.283	Si
SLU 51	0.73	-18494	702.36	22960	11886.95	16.924	Si
SLU 46	0.33	-19734	622.98	24499	12350.06	19.824	Si
SLU 46	0.73	-18210	653.21	22607	11774.64	18.026	Si
SLU 50	0.33	-20247	767.05	25136	12529.42	16.335	Si
SLU 50	0.73	-18696	746.82	23211	11965.19	16.021	Si
SLU 6	0.33	-16487	634.85	20468	11048	17.403	Si
SLU 6	0.73	-15273	600.59	18960	10487.37	17.462	Si
SLU 48	0.33	-20372	771.99	25291	12571.9	16.285	Si
SLU 48	0.73	-18811	757.29	23353	12009.01	15.858	Si
SLU 49	0.33	-20135	725.17	24997	12490.72	17.224	Si
SLU 49	0.73	-18609	712.84	23102	11931.4	16.738	Si
SLU 69	0.33	-22656	744.33	28127	13275.69	17.836	Si
SLU 69	0.73	-21057	712.23	26141	12797.9	17.969	Si
SLU 71	0.33	-22532	739.39	27972	13240.98	17.908	Si
SLU 71	0.73	-20942	701.76	25999	12761.08	18.184	Si
SLU 8	0.33	-16362	629.91	20313	10992.32	17.451	Si
SLU 8	0.73	-15158	590.11	18819	10432.52	17.679	Si

Verifica a pressoflessione nel piano secondo D.M. 17-01-18 NTC §7.8.2.2.1 in combinazioni sismiche, γM = 2

Comb.	Quota	N	M	σ0	Mu	c.s.	Verifica
SLV 1	0.33	-7890	-4226.48	9795	6495.31	1.537	Si
SLV 1	0.73	-4463	-1555.63	5541	3813.62	2.451	Si
SLV 16	0.33	-25968	4990.34	32238	17109.16	3.428	Si
SLV 16	0.73	-26956	2396.92	33465	17517.94	7.309	Si
SLV 15	0.33	-25968	4990.34	32238	17109.16	3.428	Si
SLV 15	0.73	-26956	2396.92	33465	17517.94	7.309	Si
SLV 14	0.33	-19229	4621.71	23872	13847.62	2.996	Si
SLV 14	0.73	-20272	2116.5	25166	14406.21	6.807	Si
SLV 13	0.33	-19229	4621.71	23872	13847.62	2.996	Si
SLV 13	0.73	-20272	2116.5	25166	14406.21	6.807	Si
SLV 6	0.33	-3997	-1559.69	4962	3431.86	2.2	Si
SLV 6	0.73	-2198	-597.53	2729	1923.39	3.219	Si
SLV 4	0.33	-14628	-3857.85	18161	11146.54	2.889	Si
SLV 4	0.73	-11148	-1275.22	13839	8847.05	6.938	Si
SLV 2	0.33	-7890	-4226.48	9795	6495.31	1.537	Si
SLV 2	0.73	-4463	-1555.63	5541	3813.62	2.451	Si
SLV 5	0.33	-3997	-1559.69	4962	3431.86	2.2	Si
SLV 5	0.73	-2198	-597.53	2729	1923.39	3.219	Si
SLV 3	0.33	-14628	-3857.85	18161	11146.54	2.889	Si
SLV 3	0.73	-11148	-1275.22	13839	8847.05	6.938	Si

Verifica a taglio nel piano secondo D.M. 17-01-18 (N.T.C.) §7.8.2.2.2 con rottura per scorrimento in combinazioni non sismiche, γM = 3

Comb.	Quota	N	V par	M	σ0	σN	I'	fvd	Vt scorr.	Vt fess.diag.	Vt,lim	c.s.	Verifica
SLU 61	0.33	-22784	-1844	337.41		28286	1.79	9327	7513			4.07	Si
SLU 61	0.73	-21235	-1802	396.37		26362	1.79	9070	7306			4.05	Si
SLU 53	0.33	-22474	-1832	544.88		27901	1.79	9276	7472			4.08	Si
SLU 53	0.73	-20888	-1790	566.95		25932	1.79	9013	7260			4.06	Si
SLU 66	0.33	-22256	-1830	642.13		27630	1.79	9239	7442			4.07	Si
SLU 66	0.73	-20658	-1788	652.61		25646	1.79	8975	7229			4.04	Si
SLU 45	0.33	-19971	-1785	669.79		24794	1.79	8861	7138			4	Si
SLU 45	0.73	-18411	-1747	697.67		22857	1.79	8603	6930			3.97	Si
SLU 43	0.33	-19446	-1850	562.66		24142	1.79	8774	7068			3.82	Si
SLU 43	0.73	-17898	-1814	627.57		22220	1.79	8518	6861			3.78	Si
SLU 81	0.33	-25306	-1962	356.56		31416	1.79	9744	7849			4	Si
SLU 81	0.73	-23683	-1916	395.77		29401	1.79	9476	7633			3.98	Si
SLU 60	0.33	-23021	-1917	384.22		28580	1.79	9366	7545			3.94	Si
SLU 60	0.73	-21436	-1875	440.83		26612	1.79	9104	7333			3.91	Si
SLU 64	0.33	-21730	-1895	535		26978	1.79	9153	7372			3.89	Si
SLU 64	0.73	-20144	-1855	582.51		25008	1.79	8890	7161			3.86	Si
SLU 65	0.33	-21335	-1774	456.98		26487	1.79	9087	7320			4.13	Si
SLU 65	0.73	-19808	-1733	508.42		24591	1.79	8834	7116			4.11	Si
SLU 44	0.33	-19051	-1729	484.64		23651	1.79	8709	7015			4.06	Si
SLU 44	0.73	-17562	-1692	553.48		21802	1.79	8463	6817			4.03	Si

Verifica a taglio nel piano secondo D.M. 17-01-18 (N.T.C.) §7.8.2.2.2 con rottura per scorrimento in combinazioni sismiche, γM = 2

Comb.	Quota	N	V par	M	σ0	σN	I'	fvd	Vt scorr.	Vt fess.diag.	Vt,lim	c.s.	Verifica
SLV 3	0.33	-14628	-11228	-3857.85		18161	1.79	11965	9638			0.86	No, Vu<V
SLV 3	0.73	-11148	-11741	-1275.22		13839	1.79	11101	8942			0.76	No, Vu<V
SLV 8	0.33	-26459	-10742	-330.91		32848	1.79	14903	12004			1.12	Si
SLV 8	0.73	-24479	-11412	337.17		30389	1.79	14411	11608			1.02	Si
SLV 10	0.33	-7399	7819	1094.77		9185	1.79	10170	8192			1.05	Si
SLV 10	0.73	-6941	8552	504.11		8616	1.79	10057	8101			0.95	No, Vu<V
SLV 1	0.33	-7890	-7041	-4226.48		16265	1.0779	11586	5620			0.8	No, Vu<V
SLV 1	0.73	-4463	-7199	-1555.63		6050	1.6394	9543	7041			0.98	No, Vu<V
SLV 9	0.33	-7399	7819	1094.77		9185	1.79	10170	8192			1.05	Si
SLV 9	0.73	-6941	8552	504.11		8616	1.79	10057	8101			0.95	No, Vu<V
SLV 14	0.33	-19229	8305	4621.71		23872	1.79	13108	10558			1.27	Si
SLV 14	0.73	-20272	8881	2116.5		25166	1.79	13367	10767			1.21	Si
SLV 7	0.33	-26459	-10742	-330.91		32848	1.79	14903	12004			1.12	Si
SLV 7	0.73	-24479	-11412	337.17		30389	1.79	14411	11608			1.02	Si
SLV 2	0.33	-7890	-7041	-4226.48		16265	1.0779	11586	5620			0.8	No, Vu<V
SLV 2	0.73	-4463	-7199	-1555.63		6050	1.6394	9543	7041			0.98	No, Vu<V

Comb.	Quota	N	V par	M	σ0	σN	l'	fvd	Vt scorr.	Vt fess.diag.	Vt,lim	c.s.	Verifica
SLV 4	0.33	-14628	-11228	-3857.85		18161	1.79	11965	9638			0.86	No, Vu<V
SLV 4	0.73	-11148	-11741	-1275.22		13839	1.79	11101	8942			0.76	No, Vu<V
SLV 13	0.33	-19229	8305	4621.71		23872	1.79	13108	10558			1.27	Si
SLV 13	0.73	-20272	8881	2116.5		25166	1.79	13367	10767			1.21	Si

Verifica a pressoflessione fuori piano D.M. 17-01-18 (N.T.C.)

quota -0.175 Wa 0.08 denominatore 8 γM = 2

Comb.	fd	Sa	σ0	N	M	Mc	Coeff.s.	Verifica
SLV 5	143750	0.24	4175	-3363	131.95	730.85	5.54	Si
SLV 6	143750	0.24	4175	-3363	131.95	730.85	5.54	Si
SLV 1	143750	0.24	5117	-4122	131.95	888.52	6.73	Si
SLV 2	143750	0.24	5117	-4122	131.95	888.52	6.73	Si
SLV 10	143750	0.24	11231	-9046	131.95	1848.33	14.01	Si
SLV 9	143750	0.24	11231	-9046	131.95	1848.33	14.01	Si
SLV 4	143750	0.24	12979	-10455	131.95	2102.44	15.93	Si
SLV 3	143750	0.24	12979	-10455	131.95	2102.44	15.93	Si
SLV 14	143750	0.24	28635	-23065	131.95	3973.47	30.11	Si
SLV 13	143750	0.24	28635	-23065	131.95	3973.47	30.11	Si

Verifica dei meccanismi locali di collasso con analisi cinematica lineare

forza di aggancio al piano = 0 quota mezzeria = -0.175 Wa = 0.08 Ta = 0.0332

Comb.	N top	N base	V orto	α0	M*	e*	a0*	aLim	Verifica
SLV 6	-6271	-3892	-521	0.033	986.9	0.913	0.52222	3.42705	No
SLV 5	-6271	-3892	-521	0.033	986.9	0.913	0.52222	3.42705	No
SLV 10	-9290	-11741	-573	0.039	1290	0.929	0.61789	3.42705	No
SLV 9	-9290	-11741	-573	0.039	1290	0.929	0.61789	3.42705	No
SLV 14	-15327	-29579	-494	0.056	1901.1	0.949	0.86297	3.6078	No
SLV 13	-15327	-29579	-494	0.056	1901.1	0.949	0.86297	3.6078	No
SLV 2	-5262	-3416	-322	0.054	886.7	0.906	0.86299	3.6078	No
SLV 1	-5262	-3416	-322	0.054	886.7	0.906	0.86299	3.6078	No
SLV 16	-17481	-37021	-375	0.064	2119.9	0.953	0.98267	3.6078	No
SLV 15	-17481	-37021	-375	0.064	2119.9	0.953	0.98267	3.6078	No

Tabella dei coefficienti di sicurezza minimi

Stato limite	Coeff.s.	Comb.	Verifica
PF_SLU	15.858	SLU 48	Si
V_SLU	3.782	SLU 43	Si
PF_SLV	1.537	SLV 1	Si
V_SLV	0.762	SLV 3	No
PFFP_SLV	5.539	SLV 5	Si
R_SLV	0.152	SLV 5	No

Maschio 50

Verifiche condotte secondo D.M. 17-01-18 (N.T.C.)

Dati geometrici

X ini.	Y ini.	X fin.	Y fin.	Quota i.	Quota.s	l	Sp.	h netta	h ini.	h fin.	a	a.s.,sx	a.s.,dx
-0.123	6.101	-0.123	-3.288	L1	L3	9.389	0.45	2.99	2.99	2.99			

Caratteristiche del materiale

(Circolare 7 21-01-19 C8.5.I) Muratura in mattoni pieni e malta di calce LC2_Corti

fb	fk	fvk0	fmedio	τ0	fv0	μ	ϕ	fv,lim	E	G	FC
600000			345000	9000	20000	0.58	0.77	32500	320000000	128000000	1.2

Verifica a pressoflessione nel piano secondo D.M. 17-01-18 NTC §7.8.2.2.1 in combinazioni non sismiche, γM = 3

Comb.	Quota	N	M	σ0	Mu	c.s.	Verifica
SLU 82	-1.67	-231389	31931.41	54764	355987.05	11.148	Si
SLU 82	1.32	-219341	56201.54	51913	373497.03	6.646	Si
SLU 74	-1.67	-228545	23684.56	54091	360477.59	15.22	Si
SLU 74	1.32	-217066	50797.28	51374	376360.02	7.409	Si
SLU 78	-1.67	-231178	26788.31	54714	356327.76	13.302	Si
SLU 78	1.32	-219426	50527.81	51933	373387.66	7.39	Si
SLU 80	-1.67	-229657	26163.59	54354	358747.47	13.712	Si
SLU 80	1.32	-217729	49652.94	51531	375540.19	7.563	Si
SLU 84	-1.67	-234544	29778.53	55511	350748.01	11.779	Si
SLU 84	1.32	-222677	54213.31	52702	369045.48	6.807	Si
SLU 73	-1.67	-223000	33973.77	52779	368597.63	10.849	Si
SLU 73	1.32	-210408	54775.24	49798	383924.5	7.009	Si
SLU 81	-1.67	-231911	26674.77	54887	355139.6	13.314	Si
SLU 81	1.32	-220316	54482.78	52143	372227.18	6.832	Si
SLU 75	-1.67	-228023	28941.19	53967	361277.16	12.483	Si
SLU 75	1.32	-216091	52516.04	51143	377543.39	7.189	Si
SLU 76	-1.67	-226155	31820.89	53525	364080.5	11.442	Si
SLU 76	1.32	-213743	52787.01	50588	380285.89	7.204	Si
SLU 83	-1.67	-235065	24521.89	55634	349855.67	14.267	Si
SLU 83	1.32	-223652	52494.55	52933	367686.91	7.004	Si

Verifica a pressoflessione nel piano secondo D.M. 17-01-18 NTC §7.8.2.2.1 in combinazioni sismiche, γM = 2

Comb.	Quota	N	M	σ0	Mu	c.s.	Verifica
SLV 8	-1.67	-131569	-153655.65	31139	460263.39	2.995	Si
SLV 8	1.32	-125305	-124883.6	29657	445487.47	3.567	Si
SLV 7	-1.67	-131569	-153655.65	31139	460263.39	2.995	Si
SLV 7	1.32	-125305	-124883.6	29657	445487.47	3.567	Si
SLV 10	-1.67	-186736	188168.46	44196	559572.19	2.974	Si

Comb.	Quota	N	M	σ0	Mu	c.s.	Verifica
SLV 10	1.32	-173870	196900.59	41151	541360.39	2.749	Si
SLV 2	-1.67	-61979	80264.4	14669	256040.41	3.19	Si
SLV 2	1.32	-57242	87674.86	13548	238936.36	2.725	Si
SLV 12	-1.67	-189614	-160114.94	44877	563234.98	3.518	Si
SLV 12	1.32	-180148	-126754.47	42636	550622.88	4.344	Si
SLV 5	-1.67	-128691	194627.75	30458	453561.58	2.33	Si
SLV 5	1.32	-119027	198771.46	28171	429963.37	2.163	Si
SLV 11	-1.67	-189614	-160114.94	44877	563234.98	3.518	Si
SLV 11	1.32	-180148	-126754.47	42636	550622.88	4.344	Si
SLV 6	-1.67	-128691	194627.75	30458	453561.58	2.33	Si
SLV 6	1.32	-119027	198771.46	28171	429963.37	2.163	Si
SLV 1	-1.67	-61979	80264.4	14669	256040.41	3.19	Si
SLV 1	1.32	-57242	87674.86	13548	238936.36	2.725	Si
SLV 9	-1.67	-186736	188168.46	44196	559572.19	2.974	Si
SLV 9	1.32	-173870	196900.59	41151	541360.39	2.749	Si

Verifica a taglio nel piano secondo D.M. 17-01-18 (N.T.C.) §7.8.2.2.2 con rottura per scorrimento in combinazioni non sismiche, γM = 3

Comb.	Quota	N	V par	M	σ0	σN	I'	fvd	Vt scorr.	Vt fess.diag.	Vt,lim	c.s.	Verifica
SLU 77	-1.67	-231700	57	21531.68		54837	9.3894	10833	45773			801.74	Si
SLU 77	1.32	-220401	-1795	48809.05		52163	9.3894	10833	45773			25.51	Si
SLU 79	-1.67	-230179	55	20906.95		54477	9.3894	10833	45773			826.1	Si
SLU 79	1.32	-218704	-1781	47934.18		51762	9.3894	10833	45773			25.7	Si
SLU 34	-1.67	-187785	1810	27888.93		44444	9.3894	10833	45773			25.29	Si
SLU 34	1.32	-178653	294	44489.6		42283	9.3894	10833	45773			155.7	Si
SLU 81	-1.67	-231911	58	26674.77		54887	9.3894	10833	45773			790.66	Si
SLU 81	1.32	-220316	-1793	54482.78		52143	9.3894	10833	45773			25.54	Si
SLU 31	-1.67	-184630	1803	30041.81		43697	9.3894	10833	45773			25.39	Si
SLU 31	1.32	-175317	314	46477.83		41493	9.3894	10833	45773			145.59	Si
SLU 5	-1.67	-150899	1743	22254.85		35714	9.3894	10317	43593			25.01	Si
SLU 5	1.32	-140356	542	33842.97		33219	9.3894	9985	42188			77.82	Si
SLU 2	-1.67	-147744	1737	24407.73		34967	9.3894	10218	43173			24.86	Si
SLU 2	1.32	-137020	563	35831.2		32429	9.3894	9879	41743			74.21	Si
SLU 83	-1.67	-235065	64	24521.89		55634	9.3894	10833	45773			711.09	Si
SLU 83	1.32	-223652	-1813	52494.55		52933	9.3894	10833	45773			25.25	Si
SLU 76	-1.67	-226155	1796	31820.89		53525	9.3894	10833	45773			25.49	Si
SLU 76	1.32	-213743	-17	52787.01		50588	9.3894	10833	45773			1000	Si
SLU 73	-1.67	-223000	1790	33973.77		52779	9.3894	10833	45773			25.58	Si
SLU 73	1.32	-210408	3	54775.24		49798	9.3894	10833	45773			1000	Si

Verifica a taglio nel piano secondo D.M. 17-01-18 (N.T.C.) §7.8.2.2.2 con rottura per scorrimento in combinazioni sismiche, γM = 2

Comb.	Quota	N	V par	M	σ0	σN	I'	fvd	Vt scorr.	Vt fess.diag.	Vt,lim	c.s.	Verifica
SLV 3	-1.67	-62843	-10579	-24220.62		14873	9.3894	11308	47779			4.52	Si
SLV 3	1.32	-59125	-11136	-9421.66		13993	9.3894	11132	47035			4.22	Si
SLV 10	-1.67	-186736	35720	188168.46		44196	9.3894	16250	68660			1.92	Si
SLV 10	1.32	-173870	26739	196900.59		41151	9.3894	16250	68660			2.57	Si
SLV 8	-1.67	-131569	-35703	-153655.65		31139	9.3894	14561	61524			1.72	Si
SLV 8	1.32	-125305	-29244	-124883.6		29657	9.3894	14265	60271			2.06	Si
SLV 11	-1.67	-189614	-35786	-160114.94		44877	9.3894	16250	68660			1.92	Si
SLV 11	1.32	-180148	-28264	-126754.47		42636	9.3894	16250	68660			2.43	Si
SLV 6	-1.67	-128691	35803	194627.75		30458	9.3894	14425	60948			1.7	Si
SLV 6	1.32	-119027	25759	198771.46		29149	9.0742	14163	57834			2.25	Si
SLV 5	-1.67	-128691	35803	194627.75		30458	9.3894	14425	60948			1.7	Si
SLV 5	1.32	-119027	25759	198771.46		29149	9.0742	14163	57834			2.25	Si
SLV 9	-1.67	-186736	35720	188168.46		44196	9.3894	16250	68660			1.92	Si
SLV 9	1.32	-173870	26739	196900.59		41151	9.3894	16250	68660			2.57	Si
SLV 7	-1.67	-131569	-35703	-153655.65		31139	9.3894	14561	61524			1.72	Si
SLV 7	1.32	-125305	-29244	-124883.6		29657	9.3894	14265	60271			2.06	Si
SLV 12	-1.67	-189614	-35786	-160114.94		44877	9.3894	16250	68660			1.92	Si
SLV 12	1.32	-180148	-28264	-126754.47		42636	9.3894	16250	68660			2.43	Si
SLV 4	-1.67	-62843	-10579	-24220.62		14873	9.3894	11308	47779			4.52	Si
SLV 4	1.32	-59125	-11136	-9421.66		13993	9.3894	11132	47035			4.22	Si

Verifica a pressoflessione fuori piano D.M. 17-01-18 (N.T.C.)

quota -0.175 Wa 0.08 denominatore 8 γM = 2

Comb.	fd	Sa	σ0	N	M	Mc	Coeff.s.	Verifica
SLV 1	143750	0.24	13265	-56049	692.16	11241.82	16.24	Si
SLV 2	143750	0.24	13265	-56049	692.16	11241.82	16.24	Si
SLV 3	143750	0.24	13395	-56598	692.16	11338.45	16.38	Si
SLV 4	143750	0.24	13395	-56598	692.16	11338.45	16.38	Si
SLV 5	143750	0.24	28428	-120115	692.16	20737.98	29.96	Si
SLV 6	143750	0.24	28428	-120115	692.16	20737.98	29.96	Si
SLV 8	143750	0.24	28861	-121946	692.16	20956.79	30.28	Si
SLV 7	143750	0.24	28861	-121946	692.16	20956.79	30.28	Si
SLV 10	143750	0.24	41555	-175578	692.16	26069.72	37.66	Si
SLV 9	143750	0.24	41555	-175578	692.16	26069.72	37.66	Si

Verifica dei meccanismi locali di collasso con analisi cinematica lineare

forza di aggancio al piano = 0 quota mezzeria = -0.175 Wa = 0.08 Ta = 0.0332

Comb.	N top	N base	V orto	α0	M*	e*	a0*	aLim	Verifica
SLV 13	-240050	-255462	193	0.078	26221.9	0.979	1.15637	3.6078	No
SLV 14	-240050	-255462	193	0.078	26221.9	0.979	1.15637	3.6078	No
SLV 16	-241933	-256326	179	0.078	26413.7	0.979	1.15677	3.6078	No
SLV 15	-241933	-256326	179	0.078	26413.7	0.979	1.15677	3.6078	No
SLV 3	-59125	-62843	-666	0.078	7816.4	0.937	1.20932	3.6078	No
SLV 4	-59125	-62843	-666	0.078	7816.4	0.937	1.20932	3.6078	No
SLV 1	-57242	-61979	-651	0.078	7625.9	0.935	1.21549	3.6078	No
SLV 2	-57242	-61979	-651	0.078	7625.9	0.935	1.21549	3.6078	No
SLV 11	-180148	-189614	-134	0.079	20119.9	0.973	1.18045	3.42705	No
SLV 12	-180148	-189614	-134	0.079	20119.9	0.973	1.18045	3.42705	No

Tabella dei coefficienti di sicurezza minimi

Stato limite	Coeff.s.	Comb.	Verifica
PF_SLU	6.646	SLU 82	Si
V_SLU	24.858	SLU 2	Si
PF_SLV	2.163	SLV 5	Si
V_SLV	1.702	SLV 5	Si
PFFP_SLV	16.242	SLV 1	Si
R_SLV	0.321	SLV 13	No

Maschio 51

Verifiche condotte secondo D.M. 17-01-18 (N.T.C.)

Dati geometrici

X ini.	Y ini.	X fin.	Y fin.	Quota i.	Quota.s	l	Sp.	h netta	h ini.	h fin.	a	a.s.,sx	a.s.,dx
-24.613	-3.183	-24.613	5.937	L3	L4	9.12	0.28	3.68	3.68	3.68			

Caratteristiche del materiale

(Circolare 7 21-01-19 C8.5.I) Muratura in mattoni pieni e malta di calce LC2_Corti

fb	fk	fvk0	fmedio	τ0	fv0	μ	ϕ	fv,lim	E	G	FC
600000			345000	9000	20000	0.58	0.77	32500	320000000	128000000	1.2

Verifica a pressoflessione nel piano secondo D.M. 17-01-18 NTC §7.8.2.2.1 in combinazioni non sismiche, γM = 3

Comb.	Quota	N	M	σ0	Mu	c.s.	Verifica
SLU 83	1.32	-222469	-43903.84	87120	0	0	No, Rottura per schiacciamento
SLU 83	5	-144521	-19759	56595	201149.49	10.18	Si
SLU 75	1.32	-214858	-41782.33	84139	0	0	No, Rottura per schiacciamento
SLU 75	5	-139721	-17984.61	54715	209170.62	11.631	Si
SLU 74	1.32	-216343	-42619.48	84721	0	0	No, Rottura per schiacciamento
SLU 74	5	-140589	-19190.23	55055	207794.81	10.828	Si
SLU 79	1.32	-217968	-39503.18	85357	0	0	No, Rottura per schiacciamento
SLU 79	5	-141791	-17045.02	55526	205836.05	12.076	Si
SLU 81	1.32	-219207	-46117.31	85842	0	0	No, Rottura per schiacciamento
SLU 81	5	-142084	-21335.63	55641	205348.17	9.625	Si
SLU 76	1.32	-212231	-40321.41	83111	0	0	No, Rottura per schiacciamento
SLU 76	5	-137907	-16612.28	54005	211939.3	12.758	Si
SLU 80	1.32	-216483	-38666.03	84776	0	0	No, Rottura per schiacciamento
SLU 80	5	-140923	-15839.39	55186	207257.59	13.085	Si
SLU 77	1.32	-219605	-40406.01	85998	0	0	No, Rottura per schiacciamento
SLU 77	5	-143026	-17613.6	56010	203755.85	11.568	Si
SLU 84	1.32	-220983	-43066.69	86538	0	0	No, Rottura per schiacciamento
SLU 84	5	-143653	-18553.37	56255	202674.95	10.924	Si
SLU 73	1.32	-208969	-42534.88	81833	0	0	No, Rottura per schiacciamento
SLU 73	5	-135470	-18188.91	53051	215431.3	11.844	Si

Verifica a pressoflessione nel piano secondo D.M. 17-01-18 NTC §7.8.2.2.1 in combinazioni sismiche, γM = 2

Comb.	Quota	N	M	σ0	Mu	c.s.	Verifica
SLV 10	1.32	-123049	-170662.07	48187	339823.83	1.991	Si
SLV 10	5	-83067	-86362.81	32530	277944.14	3.218	Si
SLV 14	1.32	-61273	-78423.4	23995	224536.94	2.863	Si
SLV 14	5	-54601	-44882.67	21382	205411.52	4.577	Si
SLV 13	1.32	-61273	-78423.4	23995	224536.94	2.863	Si
SLV 13	5	-54601	-44882.67	21382	205411.52	4.577	Si
SLV 6	1.32	-176177	-166778.56	68992	349755.67	2.097	Si
SLV 6	5	-108182	-80237.65	42365	322271.25	4.016	Si
SLV 5	1.32	-176177	-166778.56	68992	349755.67	2.097	Si
SLV 5	5	-108182	-80237.65	42365	322271.25	4.016	Si
SLV 11	1.32	-123641	105821.98	48418	340389.2	3.217	Si
SLV 11	5	-85452	52569.08	33463	282945.09	5.382	Si
SLV 8	1.32	-176770	109705.48	69224	349401.45	3.185	Si
SLV 8	5	-110567	58694.24	43298	325521.69	5.546	Si
SLV 9	1.32	-123049	-170662.07	48187	339823.83	1.991	Si
SLV 9	5	-83067	-86362.81	32530	277944.14	3.218	Si
SLV 7	1.32	-176770	109705.48	69224	349401.45	3.185	Si
SLV 7	5	-110567	58694.24	43298	325521.69	5.546	Si
SLV 12	1.32	-123641	105821.98	48418	340389.2	3.217	Si
SLV 12	5	-85452	52569.08	33463	282945.09	5.382	Si

Verifica a taglio nel piano secondo D.M. 17-01-18 (N.T.C.) §7.8.2.2.2 con rottura per scorrimento in combinazioni non sismiche, γM = 3

Comb.	Quota	N	V par	M	σ0	σN	l'	fvd	Vt scorr.	Vt fess.diag.	Vt,lim	c.s.	Verifica
SLU 10	1.32	-155192	-721	-31627.88		60774	9.12	10833	27664			38.34	Si
SLU 10	5	-100507	-1351	-13174.85		39359	9.12	10803	27588			20.43	Si
SLU 5	1.32	-140342	-799	-24310.98		54959	9.12	10833	27664			34.61	Si
SLU 5	5	-90887	-1346	-8944.42		35592	9.12	10301	26305			19.55	Si
SLU 31	1.32	-173317	-627	-35479.53		67872	9.12	10833	27664			44.14	Si
SLU 31	5	-112672	-1352	-15084.53		44123	9.12	10833	27664			20.47	Si
SLU 23	1.32	-155205	-721	-30376.1		60779	9.12	10833	27664			38.38	Si

Comb.	Quota	N	V par	M	σ0	σN	l'	fvd	Vt scorr.	Vt fess.diag.	Vt,lim	c.s.	Verifica
SLU 23	5	-100615	-1349	-12430.74		39401	9.12	10809	27602			20.45	Si
SLU 73	1.32	-208969	-431	-42534.88		81833	9.12	10833	27664			64.25	Si
SLU 73	5	-135470	-1347	-18188.91		53051	9.12	10833	27664			20.54	Si
SLU 34	1.32	-176578	-610	-33266.06		69149	9.12	10833	27664			45.32	Si
SLU 34	5	-115109	-1349	-13507.89		45077	9.12	10833	27664			20.51	Si
SLU 13	1.32	-158454	-705	-29414.41		62051	9.12	10833	27664			39.23	Si
SLU 13	5	-102944	-1348	-11598.21		40313	9.12	10833	27664			20.52	Si
SLU 52	1.32	-190845	-525	-38683.23		74736	9.12	10833	27664			52.66	Si
SLU 52	5	-123305	-1346	-16279.23		48287	9.12	10833	27664			20.55	Si
SLU 2	1.32	-137081	-816	-26524.45		53681	9.12	10833	27664			33.92	Si
SLU 2	5	-88450	-1348	-10521.05		34637	9.12	10174	25980			19.27	Si
SLU 26	1.32	-158467	-704	-28162.63		62056	9.12	10833	27664			39.27	Si
SLU 26	5	-103052	-1347	-10854.1		40356	9.12	10833	27664			20.54	Si

Verifica a taglio nel piano secondo D.M. 17-01-18 (N.T.C.) §7.8.2.2.2 con rottura per scorrimento in combinazioni sismiche, γM = 2

Comb.	Quota	N	V par	M	σ0	σN	l'	fvd	Vt scorr.	Vt fess.diag.	Vt,lim	c.s.	Verifica
SLV 14	1.32	-61273	-20987	-78423.4		23995	9.12	13132	33535			1.6	Si
SLV 14	5	-54601	-7336	-44882.67		21382	9.12	12610	32200			4.39	Si
SLV 5	1.32	-176177	-26049	-166778.56		68992	9.12	16250	41496			1.59	Si
SLV 5	5	-108182	-19175	-80237.65		42365	9.12	16250	41496			2.16	Si
SLV 11	1.32	-123641	27681	105821.98		48418	9.12	16250	41496			1.5	Si
SLV 11	5	-85452	19201	52569.08		33463	9.12	15026	38370			2	Si
SLV 12	1.32	-123641	27681	105821.98		48418	9.12	16250	41496			1.5	Si
SLV 12	5	-85452	19201	52569.08		33463	9.12	15026	38370			2	Si
SLV 10	1.32	-123049	-33614	-170662.07		48187	9.12	16250	41496			1.23	Si
SLV 10	5	-83067	-20051	-86362.81		32530	9.12	14839	37893			1.89	Si
SLV 6	1.32	-176177	-26049	-166778.56		68992	9.12	16250	41496			1.59	Si
SLV 6	5	-108182	-19175	-80237.65		42365	9.12	16250	41496			2.16	Si
SLV 8	1.32	-176770	35246	109705.48		69224	9.12	16250	41496			1.18	Si
SLV 8	5	-110567	20078	58694.24		43298	9.12	16250	41496			2.07	Si
SLV 13	1.32	-61273	-20987	-78423.4		23995	9.12	13132	33535			1.6	Si
SLV 13	5	-54601	-7336	-44882.67		21382	9.12	12610	32200			4.39	Si
SLV 9	1.32	-123049	-33614	-170662.07		48187	9.12	16250	41496			1.23	Si
SLV 9	5	-83067	-20051	-86362.81		32530	9.12	14839	37893			1.89	Si
SLV 7	1.32	-176770	35246	109705.48		69224	9.12	16250	41496			1.18	Si
SLV 7	5	-110567	20078	58694.24		43298	9.12	16250	41496			2.07	Si

Verifica a pressoflessione fuori piano D.M. 17-01-18 (N.T.C.)

quota 3.16 Wa 0.05 denominatore 8 γM = 2

Comb.	fd	Sa	σ0	N	M	Mc	Coeff.s.	Verifica
SLV 13	143750	0.31	23480	-59958	823.48	6781.07	8.23	Si
SLV 14	143750	0.31	23480	-59958	823.48	6781.07	8.23	Si
SLV 15	143750	0.31	23856	-60919	823.48	6863.48	8.33	Si
SLV 16	143750	0.31	23856	-60919	823.48	6863.48	8.33	Si
SLV 9	143750	0.31	38523	-98372	823.48	9430.07	11.45	Si
SLV 10	143750	0.31	38523	-98372	823.48	9430.07	11.45	Si
SLV 12	143750	0.31	39777	-101575	823.48	9591.14	11.65	Si
SLV 11	143750	0.31	39777	-101575	823.48	9591.14	11.65	Si
SLV 6	143750	0.31	51793	-132260	823.48	10667.55	12.95	Si
SLV 5	143750	0.31	51793	-132260	823.48	10667.55	12.95	Si

Verifica dei meccanismi locali di collasso con analisi cinematica lineare

forza di aggancio al piano = 0 quota mezzeria = 3.16 Wa = 0.05 Ta = 0.0808

Comb.	N top	N base	V orto	α0	M*	e*	a0*	aLim	Verifica
SLV 4	-139033	-238545	133	0.039	15478.5	0.974	0.58695	8.50261	No
SLV 3	-139033	-238545	133	0.039	15478.5	0.974	0.58695	8.50261	No
SLV 1	-138318	-238368	67	0.04	15405.6	0.974	0.59381	8.50261	No
SLV 2	-138318	-238368	67	0.04	15405.6	0.974	0.59381	8.50261	No
SLV 14	-54601	-61273	-123	0.041	6890.1	0.945	0.63335	8.50261	No
SLV 13	-54601	-61273	-123	0.041	6890.1	0.945	0.63335	8.50261	No
SLV 15	-55317	-61451	-58	0.042	6962.6	0.946	0.64833	8.50261	No
SLV 16	-55317	-61451	-58	0.042	6962.6	0.946	0.64833	8.50261	No
SLV 7	-110567	-176770	143	0.04	12579.9	0.968	0.5937	7.42296	No
SLV 8	-110567	-176770	143	0.04	12579.9	0.968	0.5937	7.42296	No

Tabella dei coefficienti di sicurezza minimi

Stato limite	Coeff.s.	Comb.	Verifica
PF_SLU	0	SLU 73	No
V_SLU	19.266	SLU 2	Si
PF_SLV	1.991	SLV 9	Si
V_SLV	1.177	SLV 7	Si
PFFP_SLV	8.235	SLV 13	Si
R_SLV	0.069	SLV 3	No

Maschio 52

Verifiche condotte secondo D.M. 17-01-18 (N.T.C.)

Dati geometrici

X ini.	Y ini.	X fin.	Y fin.	Quota i.	Quota.s	l	Sp.	h netta	h ini.	h fin.	a	a.s.,sx	a.s.,dx
-22.878	5.937	-24.613	5.937	L3	L4	1.735	0.28	3.68	3.68	3.68			

Caratteristiche del materiale

(Circolare 7 21-01-19 C8.5.I) Muratura in mattoni pieni e malta di calce LC2_Corti

fb	fk	fvk0	fmedio	τ0	fv0	μ	ϕ	fv,lim	E	G	FC
600000			345000	9000	20000	0.58	0.77	32500	320000000	128000000	1.2

Verifica a pressoflessione nel piano secondo D.M. 17-01-18 NTC §7.8.2.2.1 in combinazioni non sismiche, γM = 3

Comb.	Quota	N	M	σ0	Mu	c.s.	Verifica
SLU 74	2.22	-21638	5188.62	44540	8507.25	1.64	Si
SLU 74	4.12	-23896	-788.13	49188	8212.17	10.42	Si
SLU 84	2.22	-22050	5284.01	45389	8470.06	1.603	Si
SLU 84	4.12	-24564	-886.56	50565	8081.9	9.116	Si
SLU 78	2.22	-21937	5258.02	45157	8480.96	1.613	Si
SLU 78	4.12	-24327	-824.44	50076	8130.37	9.862	Si
SLU 79	2.22	-22013	5278.62	45313	8473.66	1.605	Si
SLU 79	4.12	-24314	-784.51	50049	8132.97	10.367	Si
SLU 83	2.22	-22261	5333.96	45823	8448.12	1.584	Si
SLU 83	4.12	-24712	-856.61	50869	8050.46	9.398	Si
SLU 77	2.22	-22148	5307.97	45591	8460.07	1.594	Si
SLU 77	4.12	-24475	-794.5	50380	8100.46	10.196	Si
SLU 80	2.22	-21802	5228.68	44879	8493.3	1.624	Si
SLU 80	4.12	-24166	-814.46	49745	8161.83	10.021	Si
SLU 81	2.22	-21750	5214.61	44772	8497.83	1.63	Si
SLU 81	4.12	-24133	-850.25	49677	8168.19	9.607	Si
SLU 82	2.22	-21539	5164.67	44337	8515.03	1.649	Si
SLU 82	4.12	-23985	-880.19	49372	8195.88	9.311	Si
SLU 75	2.22	-21426	5138.67	44105	8523.42	1.659	Si
SLU 75	4.12	-23748	-818.07	48884	8238.32	10.07	Si

Verifica a pressoflessione nel piano secondo D.M. 17-01-18 NTC §7.8.2.2.1 in combinazioni sismiche, γM = 2

Comb.	Quota	N	M	σ0	Mu	c.s.	Verifica
SLV 13	2.22	-6867	-2875.44	14135	5267.8	1.832	Si
SLV 13	4.12	-598	3182.33	0	0	0	No, e>l/2
SLV 14	2.22	-6867	-2875.44	14135	5267.8	1.832	Si
SLV 14	4.12	-598	3182.33	0	0	0	No, e>l/2
SLV 3	2.22	-22908	10048.66	47154	12203.38	1.214	Si
SLV 3	4.12	-31817	-4123.9	65494	12806.79	3.106	Si
SLV 7	2.22	-24405	10631.08	50237	12467.02	1.173	Si
SLV 7	4.12	-30856	-1989.42	63515	12853.34	6.461	Si
SLV 9	2.22	-5369	-3457.86	11052	4236.44	1.225	Si
SLV 9	4.12	-1559	1047.85	3210	1317.31	1.257	Si
SLV 10	2.22	-5369	-3457.86	11052	4236.44	1.225	Si
SLV 10	4.12	-1559	1047.85	3210	1317.31	1.257	Si
SLV 11	2.22	-21000	7763.8	43227	11772.52	1.516	Si
SLV 11	4.12	-23461	118.84	48294	12308.5	103.573	Si
SLV 8	2.22	-24405	10631.08	50237	12467.02	1.173	Si
SLV 8	4.12	-30856	-1989.42	63515	12853.34	6.461	Si
SLV 12	2.22	-21000	7763.8	43227	11772.52	1.516	Si
SLV 12	4.12	-23461	118.84	48294	12308.5	103.573	Si
SLV 4	2.22	-22908	10048.66	47154	12203.38	1.214	Si
SLV 4	4.12	-31817	-4123.9	65494	12806.79	3.106	Si

Verifica a taglio nel piano secondo D.M. 17-01-18 (N.T.C.) §7.8.2.2.2 con rottura per scorrimento in combinazioni non sismiche, γM = 3

Comb.	Quota	N	V par	M	σ0	σN	I'	fvd	Vt scorr.	Vt fess.diag.	Vt,lim	c.s.	Verifica
SLU 75	2.22	-21426	5077	5138.67		44105	1.735	10833	5263			1.04	Si
SLU 75	4.12	-23748	5276	-818.07		48884	1.735	10833	5263			1	No, Vu<V
SLU 74	2.22	-21638	5057	5188.62		44540	1.735	10833	5263			1.04	Si
SLU 74	4.12	-23896	5259	-788.13		49188	1.735	10833	5263			1	Si
SLU 83	2.22	-22261	5254	5333.96		45823	1.735	10833	5263			1	Si
SLU 83	4.12	-24712	5461	-856.61		50869	1.735	10833	5263			0.96	No, Vu<V
SLU 77	2.22	-22148	5152	5307.97		45591	1.735	10833	5263			1.02	Si
SLU 77	4.12	-24475	5357	-794.5		50380	1.735	10833	5263			0.98	No, Vu<V
SLU 81	2.22	-21750	5160	5214.61		44772	1.735	10833	5263			1.02	Si
SLU 81	4.12	-24133	5362	-850.25		49677	1.735	10833	5263			0.98	No, Vu<V
SLU 80	2.22	-21802	5140	5228.68		44879	1.735	10833	5263			1.02	Si
SLU 80	4.12	-24166	5342	-814.46		49745	1.735	10833	5263			0.99	No, Vu<V
SLU 79	2.22	-22013	5120	5278.62		45313	1.735	10833	5263			1.03	Si
SLU 79	4.12	-24314	5324	-784.51		50049	1.735	10833	5263			0.99	No, Vu<V
SLU 84	2.22	-22050	5274	5284.01		45389	1.735	10833	5263			1	No, Vu<V
SLU 84	4.12	-24564	5478	-886.56		50565	1.735	10833	5263			0.96	No, Vu<V
SLU 78	2.22	-21937	5172	5258.02		45157	1.735	10833	5263			1.02	Si
SLU 78	4.12	-24327	5375	-824.44		50076	1.735	10833	5263			0.98	No, Vu<V
SLU 82	2.22	-21539	5180	5164.67		44337	1.735	10833	5263			1.02	Si
SLU 82	4.12	-23985	5379	-880.19		49372	1.735	10833	5263			0.98	No, Vu<V

Verifica a taglio nel piano secondo D.M. 17-01-18 (N.T.C.) §7.8.2.2.2 con rottura per scorrimento in combinazioni sismiche, γM = 2

Comb.	Quota	N	V par	M	σ0	σN	I'	fvd	Vt scorr.	Vt fess.diag.	Vt,lim	c.s.	Verifica
SLV 1	2.22	-18218	8764	6682.16		43314	1.5022	16250	6835			0.78	No, Vu<V
SLV 1	4.12	-25247	9291	-3845.19		51969	1.735	16250	7894			0.85	No, Vu<V
SLV 14	2.22	-6867	-5841	-2875.44		18216	1.3463	11977	4515			0.77	No, Vu<V
SLV 14	4.12	-598	-5108	3182.33		0	0	8333	0			0	No, Vu<V
SLV 10	2.22	-5369	-5310	-3457.86		28602	0.6704	14054	2638			0.5	No, Vu<V
SLV 10	4.12	-1559	-3501	1047.85		9492	0.5867	10232	1681			0.48	No, Vu<V
SLV 2	2.22	-18218	8764	6682.16		43314	1.5022	16250	6835			0.78	No, Vu<V
SLV 2	4.12	-25247	9291	-3845.19		51969	1.735	16250	7894			0.85	No, Vu<V
SLV 9	2.22	-5369	-5310	-3457.86		28602	0.6704	14054	2638			0.5	No, Vu<V
SLV 9	4.12	-1559	-3501	1047.85		9492	0.5867	10232	1681			0.48	No, Vu<V
SLV 7	2.22	-24405	12158	10631.08		67270	1.2957	16250	5895			0.48	No, Vu<V
SLV 7	4.12	-30856	10628	-1989.42		63515	1.735	16250	7894			0.74	No, Vu<V
SLV 13	2.22	-6867	-5841	-2875.44		18216	1.3463	11977	4515			0.77	No, Vu<V
SLV 13	4.12	-598	-5108	3182.33		0	0	8333	0			0	No, Vu<V
SLV 3	2.22	-22908	12690	10048.66		63592	1.2865	16250	5854			0.46	No, Vu<V
SLV 3	4.12	-31817	12234	-4123.9		65494	1.735	16250	7894			0.65	No, Vu<V
SLV 4	2.22	-22908	12690	10048.66		63592	1.2865	16250	5854			0.46	No, Vu<V
SLV 4	4.12	-31817	12234	-4123.9		65494	1.735	16250	7894			0.65	No, Vu<V
SLV 8	2.22	-24405	12158	10631.08		67270	1.2957	16250	5895			0.48	No, Vu<V

Comb.	Quota	N	V par	M	σ0	σN	l'	fvd	Vt scorr.	Vt fess.diag.	Vt,lim	c.s.	Verifica
SLV 8	4.12	-30856	10628	-1989.42		63515	1.735	16250	7894			0.74	No, Vu<V

Verifica a pressoflessione fuori piano D.M. 17-01-18 (N.T.C.)

quota 3.16 Wa 0.05 denominatore 8 γM = 2

Comb.	fd	Sa	σ0	N	M	Mc	Coeff.s.	Verifica
SLV 10	143750	0.31	0	-725	156.66	0	0	No, e>t/2
SLV 9	143750	0.31	0	-725	156.66	0	0	No, e>t/2
SLV 13	143750	0.31	6589	-3201	156.66	423.97	2.71	Si
SLV 14	143750	0.31	6589	-3201	156.66	423.97	2.71	Si
SLV 5	143750	0.31	12846	-6241	156.66	781.84	4.99	Si
SLV 6	143750	0.31	12846	-6241	156.66	781.84	4.99	Si
SLV 16	143750	0.31	22310	-10838	156.66	1240.31	7.92	Si
SLV 15	143750	0.31	22310	-10838	156.66	1240.31	7.92	Si
SLV 1	143750	0.31	44433	-21586	156.66	1923.05	12.28	Si
SLV 2	143750	0.31	44433	-21586	156.66	1923.05	12.28	Si

Verifica dei meccanismi locali di collasso con analisi cinematica lineare

forza di aggancio al piano = 0 quota mezzeria = 3.16 Wa = 0.05 Ta = 0.0808

Comb.	N top	N base	V orto	α0	M*	e*	a0*	aLim	Verifica
SLV 10	-3809	1330	65	0	0	0	0	7.42296	No, Trazione
SLV 9	-3809	1330	65	0	0	0	0	7.42296	No, Trazione
SLV 2	-19334	-14589	39	0.039	2220.1	0.966	0.58852	8.50261	No
SLV 1	-19334	-14589	39	0.039	2220.1	0.966	0.58852	8.50261	No
SLV 3	-23936	-21621	2	0.04	2688.6	0.971	0.60406	8.50261	No
SLV 4	-23936	-21621	2	0.04	2688.6	0.971	0.60406	8.50261	No
SLV 16	-8312	-9753	-25	0.042	1100.6	0.936	0.64646	8.50261	No
SLV 15	-8312	-9753	-25	0.042	1100.6	0.936	0.64646	8.50261	No
SLV 5	-8496	-2230	73	0.037	1119.2	0.937	0.57207	7.42296	No
SLV 6	-8496	-2230	73	0.037	1119.2	0.937	0.57207	7.42296	No

Tabella dei coefficienti di sicurezza minimi

Stato limite	Coeff.s.	Comb.	Verifica
PF_SLU	1.584	SLU 83	Si
V_SLU	0.961	SLU 84	No
PF_SLV	0	SLV 13	No
V_SLV	0	SLV 13	No
PFFP_SLV	0	SLV 9	No
R_SLV	0	SLV 10	No

Maschio 53

Verifiche condotte secondo D.M. 17-01-18 (N.T.C.)

Dati geometrici

X ini.	Y ini.	X fin.	Y fin.	Quota i.	Quota.s	l	Sp.	h netta	h ini.	h fin.	a	a.s.,sx	a.s.,dx
-19.663	5.937	-21.878	5.937	L3	L4	2.215	0.28	3.68	3.68	3.68			

Caratteristiche del materiale

(Circolare 7 21-01-19 C8.5.I) Muratura in mattoni pieni e malta di calce LC2_Corti

fb	fk	fvk0	fmedio	τ0	fv0	μ	ϕ	fv,lim	E	G	FC
600000			345000	9000	20000	0.58	0.77	32500	320000000	128000000	1.2

Verifica a pressoflessione nel piano secondo D.M. 17-01-18 NTC §7.8.2.2.1 in combinazioni non sismiche, γM = 3

Comb.	Quota	N	M	σ0	Mu	c.s.	Verifica
SLU 74	2.22	-32679	-9355.62	52697	12777.07	1.366	Si
SLU 74	4.12	-30676	-2122.91	49467	13340.88	6.284	Si
SLU 79	2.22	-33048	-9432.44	53292	12653.91	1.342	Si
SLU 79	4.12	-31042	-2137.61	50058	13250.78	6.199	Si
SLU 75	2.22	-32634	-9336.41	52624	12791.67	1.37	Si
SLU 75	4.12	-30614	-2149.56	49367	13355.56	6.213	Si
SLU 81	2.22	-33107	-9482.71	53387	12633.76	1.332	Si
SLU 81	4.12	-31150	-2122.71	50232	13223.23	6.229	Si
SLU 78	2.22	-33269	-9485.95	53649	12577.4	1.326	Si
SLU 78	4.12	-31245	-2193.28	50385	13198.52	6.018	Si
SLU 82	2.22	-33062	-9463.49	53315	12649.21	1.337	Si
SLU 82	4.12	-31088	-2149.36	50132	13239.21	6.16	Si
SLU 83	2.22	-33742	-9632.25	54412	12406.31	1.288	Si
SLU 83	4.12	-31782	-2166.43	51250	13051.33	6.024	Si
SLU 77	2.22	-33314	-9505.17	53721	12561.54	1.322	Si
SLU 77	4.12	-31307	-2166.63	50485	13182.12	6.084	Si
SLU 84	2.22	-33697	-9613.04	54339	12423.02	1.292	Si
SLU 84	4.12	-31719	-2193.08	51150	13069.03	5.959	Si
SLU 80	2.22	-33003	-9413.23	53220	12669.24	1.346	Si
SLU 80	4.12	-30980	-2164.26	49958	13266.47	6.13	Si

Verifica a pressoflessione nel piano secondo D.M. 17-01-18 NTC §7.8.2.2.1 in combinazioni sismiche, γM = 2

Comb.	Quota	N	M	σ0	Mu	c.s.	Verifica
SLV 15	2.22	-18094	-11072.75	29177	15251.81	1.377	Si
SLV 15	4.12	-22575	4305.64	36404	17550.84	4.076	Si
SLV 9	2.22	-4824	-8981.9	0	0	0	No, e>l/2
SLV 9	4.12	-7854	-1653.56	12665	7795.5	4.714	Si
SLV 2	2.22	-26426	-1826.79	42614	19057.39	10.432	Si
SLV 2	4.12	-18764	-7213.43	30258	15633.05	2.167	Si
SLV 5	2.22	-9997	-6018.99	16121	9609.67	1.597	Si
SLV 5	4.12	-8921	-4790.98	14386	8715.88	1.819	Si

Comb.	Quota	N	M	σ0	Mu	c.s.	Verifica
SLV 13	2.22	-9184	-11703.15	0	0	0	No, e>l/2
SLV 13	4.12	-15206	3244.62	24521	13459.3	4.148	Si
SLV 6	2.22	-9997	-6018.99	16121	9609.67	1.597	Si
SLV 6	4.12	-8921	-4790.98	14386	8715.88	1.819	Si
SLV 1	2.22	-26426	-1826.79	42614	19057.39	10.432	Si
SLV 1	4.12	-18764	-7213.43	30258	15633.05	2.167	Si
SLV 14	2.22	-9184	-11703.15	0	0	0	No, e>l/2
SLV 14	4.12	-15206	3244.62	24521	13459.3	4.148	Si
SLV 10	2.22	-4824	-8981.9	0	0	0	No, e>l/2
SLV 10	4.12	-7854	-1653.56	12665	7795.5	4.714	Si
SLV 16	2.22	-18094	-11072.75	29177	15251.81	1.377	Si
SLV 16	4.12	-22575	4305.64	36404	17550.84	4.076	Si

Verifica a taglio nel piano secondo D.M. 17-01-18 (N.T.C.) §7.8.2.2.2 con rottura per scorrimento in combinazioni non sismiche, γM = 3

Comb.	Quota	N	V par	M	σ0	σN	l'	fvd	Vt scorr.	Vt fess.diag.	Vt,lim	c.s.	Verifica
SLU 84	2.22	-33697	-4398	-9613.04		54339	2.2147	10833	6718			1.53	Si
SLU 84	4.12	-31719	-4443	-2193.08		51150	2.2147	10833	6718			1.51	Si
SLU 74	2.22	-32679	-4282	-9355.62		52697	2.2147	10833	6718			1.57	Si
SLU 74	4.12	-30676	-4328	-2122.91		49467	2.2147	10833	6718			1.55	Si
SLU 81	2.22	-33107	-4380	-9482.71		53387	2.2147	10833	6718			1.53	Si
SLU 81	4.12	-31150	-4426	-2122.71		50232	2.2147	10833	6718			1.52	Si
SLU 80	2.22	-33003	-4279	-9413.23		53220	2.2147	10833	6718			1.57	Si
SLU 80	4.12	-30980	-4323	-2164.26		49958	2.2147	10833	6718			1.55	Si
SLU 77	2.22	-33314	-4335	-9505.17		53721	2.2147	10833	6718			1.55	Si
SLU 77	4.12	-31307	-4381	-2166.63		50485	2.2147	10833	6718			1.53	Si
SLU 82	2.22	-33062	-4346	-9463.49		53315	2.2147	10833	6718			1.55	Si
SLU 82	4.12	-31088	-4390	-2149.36		50132	2.2147	10833	6718			1.53	Si
SLU 78	2.22	-33269	-4300	-9485.95		53649	2.2147	10833	6718			1.56	Si
SLU 78	4.12	-31245	-4345	-2193.28		50385	2.2147	10833	6718			1.55	Si
SLU 79	2.22	-33048	-4313	-9432.44		53292	2.2147	10833	6718			1.56	Si
SLU 79	4.12	-31042	-4359	-2137.61		50058	2.2147	10833	6718			1.54	Si
SLU 83	2.22	-33742	-4433	-9632.25		54412	2.2147	10833	6718			1.52	Si
SLU 83	4.12	-31782	-4479	-2166.43		51250	2.2147	10833	6718			1.5	Si
SLU 75	2.22	-32634	-4248	-9336.41		52624	2.2147	10833	6718			1.58	Si
SLU 75	4.12	-30614	-4292	-2149.56		49367	2.2147	10833	6718			1.57	Si

Verifica a taglio nel piano secondo D.M. 17-01-18 (N.T.C.) §7.8.2.2.2 con rottura per scorrimento in combinazioni sismiche, γM = 2

Comb.	Quota	N	V par	M	σ0	σN	l'	fvd	Vt scorr.	Vt fess.diag.	Vt,lim	c.s.	Verifica
SLV 10	2.22	-4824	-9576	-8981.9		0	0	8333	0			0	No, Vu<V
SLV 10	4.12	-7854	-6498	-1653.56		12665	2.2147	10866	6738			1.04	Si
SLV 4	2.22	-35335	7614	-1196.39		56981	2.2147	16250	10077			1.32	Si
SLV 4	4.12	-26133	6616	-6152.41		42142	2.2147	16250	10077			1.52	Si
SLV 5	2.22	-9997	-3912	-6018.99		23553	1.5158	13044	5536			1.42	Si
SLV 5	4.12	-8921	-856	-4790.98		18621	1.711	12058	5777			6.75	Si
SLV 6	2.22	-9997	-3912	-6018.99		23553	1.5158	13044	5536			1.42	Si
SLV 6	4.12	-8921	-856	-4790.98		18621	1.711	12058	5777			6.75	Si
SLV 13	2.22	-9184	-13535	-11703.15		0	0	8333	0			0	No, Vu<V
SLV 13	4.12	-15206	-12601	3244.62		24521	2.2147	13237	8209			0.65	No, Vu<V
SLV 3	2.22	-35335	7614	-1196.39		56981	2.2147	16250	10077			1.32	Si
SLV 3	4.12	-26133	6616	-6152.41		42142	2.2147	16250	10077			1.52	Si
SLV 16	2.22	-18094	-11265	-11072.75		43480	1.4862	16250	6762			0.6	No, Vu<V
SLV 16	4.12	-22575	-12191	4305.64		36404	2.2147	15614	9683			0.79	No, Vu<V
SLV 9	2.22	-4824	-9576	-8981.9		0	0	8333	0			0	No, Vu<V
SLV 9	4.12	-7854	-6498	-1653.56		12665	2.2147	10866	6738			1.04	Si
SLV 15	2.22	-18094	-11265	-11072.75		43480	1.4862	16250	6762			0.6	No, Vu<V
SLV 15	4.12	-22575	-12191	4305.64		36404	2.2147	15614	9683			0.79	No, Vu<V
SLV 14	2.22	-9184	-13535	-11703.15		0	0	8333	0			0	No, Vu<V
SLV 14	4.12	-15206	-12601	3244.62		24521	2.2147	13237	8209			0.65	No, Vu<V

Verifica a pressoflessione fuori piano D.M. 17-01-18 (N.T.C.)

quota 3.16 Wa 0.05 denominatore 8 γM = 2

Comb.	fd	Sa	σ0	N	M	Mc	Coeff.s.	Verifica
SLV 9	143750	0.31	11222	-6959	199.98	884.79	4.42	Si
SLV 10	143750	0.31	11222	-6959	199.98	884.79	4.42	Si
SLV 6	143750	0.31	15904	-9863	199.98	1201.03	6.01	Si
SLV 5	143750	0.31	15904	-9863	199.98	1201.03	6.01	Si
SLV 13	143750	0.31	20926	-12977	199.98	1505.61	7.53	Si
SLV 14	143750	0.31	20926	-12977	199.98	1505.61	7.53	Si
SLV 15	143750	0.31	33926	-21038	199.98	2127.57	10.64	Si
SLV 16	143750	0.31	33926	-21038	199.98	2127.57	10.64	Si
SLV 2	143750	0.31	36533	-22655	199.98	2223.4	11.12	Si
SLV 1	143750	0.31	36533	-22655	199.98	2223.4	11.12	Si

Verifica dei meccanismi locali di collasso con analisi cinematica lineare

forza di aggancio al piano = 0 quota mezzeria = 3.16 Wa = 0.05 Ta = 0.0808

Comb.	N top	N base	V orto	α0	M*	e*	a0*	aLim	Verifica
SLV 2	-18977	-18287	100	0.037	2253.8	0.958	0.56129	8.50261	No
SLV 1	-18977	-18287	100	0.037	2253.8	0.958	0.56129	8.50261	No
SLV 15	-17567	-21907	-100	0.037	2110.6	0.955	0.56163	8.50261	No
SLV 16	-17567	-21907	-100	0.037	2110.6	0.955	0.56163	8.50261	No
SLV 5	-10129	-6668	143	0.033	1356.2	0.935	0.50907	7.42296	No
SLV 6	-10129	-6668	143	0.033	1356.2	0.935	0.50907	7.42296	No
SLV 3	-24485	-26783	26	0.04	2814.2	0.966	0.60224	8.50261	No
SLV 4	-24485	-26783	26	0.04	2814.2	0.966	0.60224	8.50261	No
SLV 12	-26415	-33526	-143	0.036	3010.6	0.968	0.53727	7.42296	No
SLV 11	-26415	-33526	-143	0.036	3010.6	0.968	0.53727	7.42296	No

Tabella dei coefficienti di sicurezza minimi

Stato limite	Coeff.s.	Comb.	Verifica

Stato limite	Coeff.s.	Comb.	Verifica
PF_SLU	1.288	SLU 83	Si
V_SLU	1.5	SLU 83	Si
PF_SLV	0	SLV 9	No
V_SLV	0	SLV 9	No
PFFP_SLV	4.424	SLV 9	Si
R_SLV	0.066	SLV 1	No

Maschio 54

Verifiche condotte secondo D.M. 17-01-18 (N.T.C.)

Dati geometrici

X ini.	Y ini.	X fin.	Y fin.	Quota i.	Quota.s	l	Sp.	h netta	h ini.	h fin.	a	a.s.,sx	a.s.,dx
-22.517	-3.183	-24.613	-3.183	L3	L4	2.095	0.28	3.68	3.68	3.68			

Caratteristiche del materiale

(Circolare 7 21-01-19 C8.5.I) Muratura in mattoni pieni e malta di calce LC2_Corti

fb	fk	fvk0	fmedio	τ0	fv0	μ	ϕ	fv,lim	E	G	FC
600000			345000	9000	20000	0.58	0.77	32500	320000000	128000000	1.2

Verifica a pressoflessione nel piano secondo D.M. 17-01-18 NTC §7.8.2.2.1 in combinazioni non sismiche, γM = 3

Comb.	Quota	N	M	σ0	Mu	c.s.	Verifica
SLU 83	2.22	-23640	9482.85	40295	12515.63	1.32	Si
SLU 83	4.12	-28040	1466.66	47793	12140.55	8.278	Si
SLU 82	2.22	-24882	8747.65	42411	12495.72	1.428	Si
SLU 82	4.12	-28788	1027.36	49069	11992.26	11.673	Si
SLU 60	2.22	-21448	8694.4	36557	12385.73	1.425	Si
SLU 60	4.12	-25271	1369.69	43074	12475.56	9.108	Si
SLU 81	2.22	-23465	9450.96	39995	12512.99	1.324	Si
SLU 81	4.12	-27879	1420.23	47519	12169.15	8.568	Si
SLU 77	2.22	-23138	9251.94	39439	12504.49	1.352	Si
SLU 77	4.12	-27273	1529.44	46486	12267	8.021	Si
SLU 56	2.22	-21121	8495.39	36000	12348.33	1.454	Si
SLU 56	4.12	-24665	1478.9	42041	12504.08	8.455	Si
SLU 84	2.22	-25057	8779.54	42710	12487.45	1.422	Si
SLU 84	4.12	-28949	1073.79	49342	11957.26	11.136	Si
SLU 74	2.22	-22963	9220.05	39139	12497.98	1.356	Si
SLU 74	4.12	-27112	1483.01	46212	12290.21	8.287	Si
SLU 62	2.22	-21623	8726.3	36857	12403.89	1.421	Si
SLU 62	4.12	-25432	1416.12	43348	12465.32	8.802	Si
SLU 79	2.22	-22915	9167.39	39058	12495.98	1.363	Si
SLU 79	4.12	-26991	1514.95	46006	12306.93	8.124	Si

Verifica a pressoflessione nel piano secondo D.M. 17-01-18 NTC §7.8.2.2.1 in combinazioni sismiche, γM = 2

Comb.	Quota	N	M	σ0	Mu	c.s.	Verifica
SLV 8	2.22	-5582	8076.46	0	0	0	No, e>l/2
SLV 8	4.12	-11374	517.82	19387	10025.42	19.361	Si
SLV 15	2.22	-8713	-298.64	14852	8018.97	26.852	Si
SLV 15	4.12	-5357	5700.84	0	0	0	No, e>l/2
SLV 3	2.22	-16216	12972.55	27641	13146.07	1.013	Si
SLV 3	4.12	-25651	-3080.92	43721	17257.4	5.601	Si
SLV 12	2.22	-3331	4095.11	0	0	0	No, e>l/2
SLV 12	4.12	-5286	3152.34	9010	5129.57	1.627	Si
SLV 4	2.22	-16216	12972.55	27641	13146.07	1.013	Si
SLV 4	4.12	-25651	-3080.92	43721	17257.4	5.601	Si
SLV 7	2.22	-5582	8076.46	0	0	0	No, e>l/2
SLV 7	4.12	-11374	517.82	19387	10025.42	19.361	Si
SLV 1	2.22	-23080	13187.84	39340	16395.13	1.243	Si
SLV 1	4.12	-31800	-3531.02	54202	18536.69	5.25	Si
SLV 16	2.22	-8713	-298.64	14852	8018.97	26.852	Si
SLV 16	4.12	-5357	5700.84	0	0	0	No, e>l/2
SLV 2	2.22	-23080	13187.84	39340	16395.13	1.243	Si
SLV 2	4.12	-31800	-3531.02	54202	18536.69	5.25	Si
SLV 11	2.22	-3331	4095.11	0	0	0	No, e>l/2
SLV 11	4.12	-5286	3152.34	9010	5129.57	1.627	Si

Verifica a taglio nel piano secondo D.M. 17-01-18 (N.T.C.) §7.8.2.2.2 con rottura per scorrimento in combinazioni non sismiche, γM = 3

Comb.	Quota	N	V par	M	σ0	σN	l'	fvd	Vt scorr.	Vt fess.diag.	Vt,lim	c.s.	Verifica
SLU 84	2.22	-25057	7483	8779.54		42781	2.0918	10833	6345			0.85	No, Vu<V
SLU 84	4.12	-28949	7731	1073.79		49342	2.0953	10833	6356			0.82	No, Vu<V
SLU 62	2.22	-21623	7216	8726.3		39966	1.9323	10833	5861			0.81	No, Vu<V
SLU 62	4.12	-25432	7465	1416.12		43348	2.0953	10833	6356			0.85	No, Vu<V
SLU 82	2.22	-24882	7501	8747.65		42554	2.0883	10833	6334			0.84	No, Vu<V
SLU 82	4.12	-28788	7746	1027.36		49069	2.0953	10833	6356			0.82	No, Vu<V
SLU 83	2.22	-23640	7915	9482.85		43530	1.9396	10833	5883			0.74	No, Vu<V
SLU 83	4.12	-28040	8186	1466.66		47793	2.0953	10833	6356			0.78	No, Vu<V
SLU 74	2.22	-22963	7636	9220.05		42308	1.9384	10833	5880			0.77	No, Vu<V
SLU 74	4.12	-27112	7900	1483.01		46212	2.0953	10833	6356			0.8	No, Vu<V
SLU 60	2.22	-21448	7233	8694.4		39754	1.9268	10833	5845			0.81	No, Vu<V
SLU 60	4.12	-25271	7480	1369.69		43074	2.0953	10833	6356			0.85	No, Vu<V
SLU 53	2.22	-20945	6936	8463.49		38744	1.9308	10721	5796			0.84	No, Vu<V
SLU 53	4.12	-24504	7178	1432.47		41767	2.0953	10833	6356			0.89	No, Vu<V
SLU 79	2.22	-22915	7551	9167.39		42125	1.9428	10833	5893			0.78	No, Vu<V
SLU 79	4.12	-26991	7815	1514.95		46006	2.0953	10833	6356			0.81	No, Vu<V
SLU 81	2.22	-23465	7933	9450.96		43317	1.9347	10833	5868			0.74	No, Vu<V
SLU 81	4.12	-27879	8201	1420.23		47519	2.0953	10833	6356			0.77	No, Vu<V
SLU 77	2.22	-23138	7618	9251.94		42521	1.9434	10833	5895			0.77	No, Vu<V

Comb.	Quota	N	V par	M	σ0	σN	l'	fvd	Vt scorr.	Vt fess.diag.	Vt,lim	c.s.	Verifica
SLU 77	4.12	-27273	7884	1529.44		46486	2.0953	10833	6356			0.81	No, Vu<V

Verifica a taglio nel piano secondo D.M. 17-01-18 (N.T.C.) §7.8.2.2.2 con rottura per scorrimento in combinazioni sismiche, γM = 2

Comb.	Quota	N	V par	M	σ0	σN	l'	fvd	Vt scorr.	Vt fess.diag.	Vt,lim	c.s.	Verifica
SLV 2	2.22	-23080	14629	13187.84		57691	1.4288	16250	6501			0.44	No, Vu<V
SLV 2	4.12	-31800	14918	-3531.02		54202	2.0953	16250	9534			0.64	No, Vu<V
SLV 12	2.22	-3331	3067	4095.11		0	0	8333	0			0	No, Vu<V
SLV 12	4.12	-5286	2267	3152.34		13944	1.3539	11122	4216			1.86	Si
SLV 16	2.22	-8713	-4048	-298.64		14852	2.0953	11304	6632			1.64	Si
SLV 16	4.12	-5357	-3970	5700.84		0	0	8333	0			0	No, Vu<V
SLV 8	2.22	-5582	8784	8076.46		0	0	8333	0			0	No, Vu<V
SLV 8	4.12	-11374	7859	517.82		19387	2.0953	12211	7164			0.91	No, Vu<V
SLV 4	2.22	-16216	15010	12972.55		77939	0.7431	16250	3381			0.23	No, Vu<V
SLV 4	4.12	-25651	14672	-3080.92		43721	2.0953	16250	9534			0.65	No, Vu<V
SLV 15	2.22	-8713	-4048	-298.64		14852	2.0953	11304	6632			1.64	Si
SLV 15	4.12	-5357	-3970	5700.84		0	0	8333	0			0	No, Vu<V
SLV 1	2.22	-23080	14629	13187.84		57691	1.4288	16250	6501			0.44	No, Vu<V
SLV 1	4.12	-31800	14918	-3531.02		54202	2.0953	16250	9534			0.64	No, Vu<V
SLV 7	2.22	-5582	8784	8076.46		0	0	8333	0			0	No, Vu<V
SLV 7	4.12	-11374	7859	517.82		19387	2.0953	12211	7164			0.91	No, Vu<V
SLV 3	2.22	-16216	15010	12972.55		77939	0.7431	16250	3381			0.23	No, Vu<V
SLV 3	4.12	-25651	14672	-3080.92		43721	2.0953	16250	9534			0.65	No, Vu<V
SLV 11	2.22	-3331	3067	4095.11		0	0	8333	0			0	No, Vu<V
SLV 11	4.12	-5286	2267	3152.34		13944	1.3539	11122	4216			1.86	Si

Verifica a pressoflessione fuori piano D.M. 17-01-18 (N.T.C.)

quota 3.16 Wa 0.05 denominatore 8 γM = 2

Comb.	fd	Sa	σ0	N	M	Mc	Coeff.s.	Verifica
SLV 12	143750	0.31	8189	-4804	189.19	627.5	3.32	Si
SLV 11	143750	0.31	8189	-4804	189.19	627.5	3.32	Si
SLV 15	143750	0.31	11820	-6934	189.19	876.9	4.63	Si
SLV 16	143750	0.31	11820	-6934	189.19	876.9	4.63	Si
SLV 8	143750	0.31	16345	-9589	189.19	1162.93	6.15	Si
SLV 7	143750	0.31	16345	-9589	189.19	1162.93	6.15	Si
SLV 14	143750	0.31	23088	-13546	189.19	1538.05	8.13	Si
SLV 13	143750	0.31	23088	-13546	189.19	1538.05	8.13	Si
SLV 4	143750	0.31	39008	-22885	189.19	2181.11	11.53	Si
SLV 3	143750	0.31	39008	-22885	189.19	2181.11	11.53	Si

Verifica dei meccanismi locali di collasso con analisi cinematica lineare

forza di aggancio al piano = 0 quota mezzeria = 3.16 Wa = 0.05 Ta = 0.0808

Comb.	N top	N base	V orto	α0	M*	e*	a0*	aLim	Verifica
SLV 3	-20551	-14392	-60	0.039	2396.5	0.962	0.58426	8.50261	No
SLV 4	-20551	-14392	-60	0.039	2396.5	0.962	0.58426	8.50261	No
SLV 2	-25279	-20965	-27	0.04	2877.6	0.968	0.59714	8.50261	No
SLV 1	-25279	-20965	-27	0.04	2877.6	0.968	0.59714	8.50261	No
SLV 14	-12141	-11951	53	0.04	1542	0.944	0.60892	8.50261	No
SLV 13	-12141	-11951	53	0.04	1542	0.944	0.60892	8.50261	No
SLV 10	-22254	-22773	63	0.038	2569.8	0.964	0.58006	7.42296	No
SLV 9	-22254	-22773	63	0.038	2569.8	0.964	0.58006	7.42296	No
SLV 5	-26196	-25478	39	0.039	2971	0.969	0.58918	7.42296	No
SLV 6	-26196	-25478	39	0.039	2971	0.969	0.58918	7.42296	No

Tabella dei coefficienti di sicurezza minimi

Stato limite	Coeff.s.	Comb.	Verifica
PF_SLU	1.32	SLU 83	Si
V_SLU	0.74	SLU 81	No
PF_SLV	0	SLV 7	No
V_SLV	0	SLV 7	No
PFFP_SLV	3.317	SLV 11	Si
R_SLV	0.069	SLV 3	No

Maschio 55

Verifiche condotte secondo D.M. 17-01-18 (N.T.C.)

Dati geometrici

X ini.	Y ini.	X fin.	Y fin.	Quota i.	Quota.s	l	Sp.	h netta	h ini.	h fin.	a	a.s.,sx	a.s.,dx
-19.287	-3.183	-21.517	-3.183	L3	L4	2.23	0.28	3.68	3.68	3.68			

Caratteristiche del materiale

(Circolare 7 21-01-19 C8.5.I) Muratura in mattoni pieni e malta di calce LC2_Corti

fb	fk	fvk0	fmedio	τ0	fv0	μ	ϕ	fv,lim	E	G	FC
600000			345000	9000	20000	0.58	0.77	32500	320000000	128000000	1.2

Verifica a pressoflessione nel piano secondo D.M. 17-01-18 NTC §7.8.2.2.1 in combinazioni non sismiche, γM = 3

Comb.	Quota	N	M	σ0	Mu	c.s.	Verifica
SLU 69	3.32	-18481	-7356.83	29598	13119.04	1.783	Si
SLU 69	4.12	-17309	-1786.74	27720	12731.57	7.126	Si
SLU 74	3.32	-20629	-8064.6	33039	13672.49	1.695	Si
SLU 74	4.12	-19457	-2033.98	31161	13395.47	6.586	Si
SLU 83	3.32	-21392	-8317.76	34260	13820.26	1.662	Si
SLU 83	4.12	-20219	-2111.29	32382	13582.43	6.433	Si
SLU 77	3.32	-20765	-8116.75	33256	13700.63	1.688	Si
SLU 77	4.12	-19592	-2012.82	31378	13430.58	6.673	Si

Comb.	Quota	N	M	σ0	Mu	c.s.	Verifica
SLU 62	3.32	-19306	-7610.48	30919	13355.34	1.755	Si
SLU 62	4.12	-18147	-1939.79	29063	13014.67	6.709	Si
SLU 81	3.32	-21256	-8265.62	34043	13795.84	1.669	Si
SLU 81	4.12	-20084	-2132.45	32165	13551.04	6.355	Si
SLU 79	3.32	-20549	-8044.23	32909	13655.34	1.698	Si
SLU 79	4.12	-19376	-1993.23	31031	13374.16	6.71	Si
SLU 53	3.32	-18543	-7357.32	29697	13137.83	1.786	Si
SLU 53	4.12	-17384	-1862.48	27842	12758.42	6.85	Si
SLU 60	3.32	-19170	-7558.34	30701	13318.51	1.762	Si
SLU 60	4.12	-18011	-1960.95	28845	12970.95	6.615	Si
SLU 56	3.32	-18679	-7409.46	29915	13178.38	1.779	Si
SLU 56	4.12	-17520	-1841.32	28059	12805.86	6.955	Si

Verifica a pressoflessione nel piano secondo D.M. 17-01-18 NTC §7.8.2.2.1 in combinazioni sismiche, γM = 2

Comb.	Quota	N	M	σ0	Mu	c.s.	Verifica
SLV 12	3.32	-4492	-6828.61	0	0	0	No, e>l/2
SLV 12	4.12	-4290	183.85	6870	4513.92	24.552	Si
SLV 15	3.32	-13223	-7782.71	21177	12188.08	1.566	Si
SLV 15	4.12	-12524	5784.59	20057	11671.65	2.018	Si
SLV 1	3.32	-14848	-3386.83	23779	13333.41	3.937	Si
SLV 1	4.12	-13749	-8622.21	22019	12567.39	1.458	Si
SLV 8	3.32	-3140	-5625.45	0	0	0	No, e>l/2
SLV 8	4.12	-2944	-4248.64	0	0	0	No, e>l/2
SLV 2	3.32	-14848	-3386.83	23779	13333.41	3.937	Si
SLV 2	4.12	-13749	-8622.21	22019	12567.39	1.458	Si
SLV 7	3.32	-3140	-5625.45	0	0	0	No, e>l/2
SLV 7	4.12	-2944	-4248.64	0	0	0	No, e>l/2
SLV 16	3.32	-13223	-7782.71	21177	12188.08	1.566	Si
SLV 16	4.12	-12524	5784.59	20057	11671.65	2.018	Si
SLV 3	3.32	-8716	-3772.18	13959	8608.07	2.282	Si
SLV 3	4.12	-8037	-8990.36	0	0	0	No, e>l/2
SLV 11	3.32	-4492	-6828.61	0	0	0	No, e>l/2
SLV 11	4.12	-4290	183.85	6870	4513.92	24.552	Si
SLV 4	3.32	-8716	-3772.18	13959	8608.07	2.282	Si
SLV 4	4.12	-8037	-8990.36	0	0	0	No, e>l/2

Verifica a taglio nel piano secondo D.M. 17-01-18 (N.T.C.) §7.8.2.2.2 con rottura per scorrimento in combinazioni non sismiche, γM = 3

Comb.	Quota	N	V par	M	σ0	σN	l'	fvd	Vt scorr.	Vt fess.diag.	Vt,lim	c.s.	Verifica
SLU 79	3.32	-20549	-7557	-8044.23		33810	2.1706	10064	6116			0.81	No, Vu<V
SLU 79	4.12	-19376	-7557	-1993.23		31031	2.23	9693	6052			0.8	No, Vu<V
SLU 74	3.32	-20629	-7531	-8064.6		33918	2.1722	10078	6130			0.81	No, Vu<V
SLU 74	4.12	-19457	-7531	-2033.98		31161	2.23	9710	6063			0.81	No, Vu<V
SLU 62	3.32	-19306	-7081	-7610.48		31886	2.1624	9807	5938			0.84	No, Vu<V
SLU 62	4.12	-18147	-7081	-1939.79		29063	2.23	9431	5888			0.83	No, Vu<V
SLU 58	3.32	-18462	-6886	-7336.94		30628	2.1528	9639	5810			0.84	No, Vu<V
SLU 58	4.12	-17304	-6886	-1821.73		27712	2.23	9251	5776			0.84	No, Vu<V
SLU 69	3.32	-18481	-6956	-7356.83		30688	2.1508	9647	5810			0.84	No, Vu<V
SLU 69	4.12	-17309	-6956	-1786.74		27720	2.23	9252	5777			0.83	No, Vu<V
SLU 77	3.32	-20765	-7623	-8116.75		34139	2.1723	10107	6148			0.81	No, Vu<V
SLU 77	4.12	-19592	-7623	-2012.82		31378	2.23	9739	6081			0.8	No, Vu<V
SLU 81	3.32	-21256	-7660	-8265.62		34849	2.1784	10202	6223			0.81	No, Vu<V
SLU 81	4.12	-20084	-7660	-2132.45		32165	2.23	9844	6147			0.8	No, Vu<V
SLU 71	3.32	-18265	-6890	-7284.31		30361	2.1486	9604	5777			0.84	No, Vu<V
SLU 71	4.12	-17092	-6890	-1767.15		27374	2.23	9205	5748			0.83	No, Vu<V
SLU 83	3.32	-21392	-7751	-8317.76		35070	2.1785	10231	6241			0.81	No, Vu<V
SLU 83	4.12	-20219	-7751	-2111.29		32382	2.23	9873	6165			0.8	No, Vu<V
SLU 56	3.32	-18679	-6953	-7409.46		30956	2.155	9683	5843			0.84	No, Vu<V
SLU 56	4.12	-17520	-6953	-1841.32		28059	2.23	9297	5805			0.83	No, Vu<V

Verifica a taglio nel piano secondo D.M. 17-01-18 (N.T.C.) §7.8.2.2.2 con rottura per scorrimento in combinazioni sismiche, γM = 2

Comb.	Quota	N	V par	M	σ0	σN	l'	fvd	Vt scorr.	Vt fess.diag.	Vt,lim	c.s.	Verifica
SLV 12	3.32	-4492	-7773	-6828.61		0	0	8333	0			0	No, Vu<V
SLV 12	4.12	-4290	-6714	183.85		6870	2.23	9707	6061			0.9	No, Vu<V
SLV 14	3.32	-19354	-17286	-7397.36		31443	2.1984	14622	9000			0.52	No, Vu<V
SLV 14	4.12	-18235	-17546	6152.74		29205	2.23	14174	8850			0.5	No, Vu<V
SLV 4	3.32	-8716	6882	-3772.18		15210	2.0466	11375	6519			0.95	No, Vu<V
SLV 4	4.12	-8037	7142	-8990.36		0	0	8333	0			0	No, Vu<V
SLV 8	3.32	-3140	-697	-5625.45		0	0	8333	0			0	No, Vu<V
SLV 8	4.12	-2944	330	-4248.64		0	0	8333	0			0	No, Vu<V
SLV 15	3.32	-13223	-16706	-7782.71		29903	1.5792	14314	6329			0.38	No, Vu<V
SLV 15	4.12	-12524	-16340	5784.59		22828	1.9593	12899	7076			0.43	No, Vu<V
SLV 11	3.32	-4492	-7773	-6828.61		0	0	8333	0			0	No, Vu<V
SLV 11	4.12	-4290	-6714	183.85		6870	2.23	9707	6061			0.9	No, Vu<V
SLV 16	3.32	-13223	-16706	-7782.71		29903	1.5792	14314	6329			0.38	No, Vu<V
SLV 16	4.12	-12524	-16340	5784.59		22828	1.9593	12899	7076			0.43	No, Vu<V
SLV 7	3.32	-3140	-697	-5625.45		0	0	8333	0			0	No, Vu<V
SLV 7	4.12	-2944	330	-4248.64		0	0	8333	0			0	No, Vu<V
SLV 13	3.32	-19354	-17286	-7397.36		31443	2.1984	14622	9000			0.52	No, Vu<V
SLV 13	4.12	-18235	-17546	6152.74		29205	2.23	14174	8850			0.5	No, Vu<V
SLV 3	3.32	-8716	6882	-3772.18		15210	2.0466	11375	6519			0.95	No, Vu<V
SLV 3	4.12	-8037	7142	-8990.36		0	0	8333	0			0	No, Vu<V

Verifica a pressoflessione fuori piano D.M. 17-01-18 (N.T.C.)

quota 3.16 Wa 0.05 denominatore 8 γM = 2

Comb.	fd	Sa	σ0	N	M	Mc	Coeff.s.	Verifica
SLV 7	143750	0.31	2658	-1660	201.36	227.31	1.13	Si
SLV 8	143750	0.31	2658	-1660	201.36	227.31	1.13	Si
SLV 12	143750	0.31	3144	-1963	201.36	267.77	1.33	Si
SLV 11	143750	0.31	3144	-1963	201.36	267.77	1.33	Si

Comb.	fd	Sa	σ0	N	M	Mc	Coeff.s.	Verifica
SLV 4	143750	0.31	12968	-8097	201.36	1013.32	5.03	Si
SLV 3	143750	0.31	12968	-8097	201.36	1013.32	5.03	Si
SLV 15	143750	0.31	14588	-9109	201.36	1122.98	5.58	Si
SLV 16	143750	0.31	14588	-9109	201.36	1122.98	5.58	Si
SLV 1	143750	0.31	22291	-13919	201.36	1593.13	7.91	Si
SLV 2	143750	0.31	22291	-13919	201.36	1593.13	7.91	Si

Verifica dei meccanismi locali di collasso con analisi cinematica lineare

forza di aggancio al piano = 0 quota mezzeria = 3.16 Wa = 0.05 Ta = 0.0808

Comb.	N top	N base	V orto	α0	M*	e*	a0*	aLim	Verifica
SLV 8	-5229	1845	-92	0	0	0	0	7.42296	No, Trazione
SLV 12	-5170	2821	-48	0	0	0	0	7.42296	No, Trazione
SLV 7	-5229	1845	-92	0	0	0	0	7.42296	No, Trazione
SLV 11	-5170	2821	-48	0	0	0	0	7.42296	No, Trazione
SLV 13	-13409	-7944	101	0.037	1690.7	0.945	0.56238	8.50261	No
SLV 14	-13409	-7944	101	0.037	1690.7	0.945	0.56238	8.50261	No
SLV 3	-9772	-5702	-92	0.037	1322.4	0.933	0.57579	8.50261	No
SLV 4	-9772	-5702	-92	0.037	1322.4	0.933	0.57579	8.50261	No
SLV 1	-13607	-11195	-46	0.04	1710.7	0.946	0.61613	8.50261	No
SLV 2	-13607	-11195	-46	0.04	1710.7	0.946	0.61613	8.50261	No

Tabella dei coefficienti di sicurezza minimi

Stato limite	Coeff.s.	Comb.	Verifica
PF_SLU	1.662	SLU 83	Si
V_SLU	0.795	SLU 83	No
PF_SLV	0	SLV 3	No
V_SLV	0	SLV 3	No
PFFP_SLV	1.129	SLV 7	Si
R_SLV	0	SLV 12	No

Maschio 56

Verifiche condotte secondo D.M. 17-01-18 (N.T.C.)

Dati geometrici

X ini.	Y ini.	X fin.	Y fin.	Quota i.	Quota.s	l	Sp.	h netta	h ini.	h fin.	a	a.s.,sx	a.s.,dx
-18.277	-3.183	-18.787	-3.183	L3	L4	0.51	0.28	3.68	3.68	3.68			

Caratteristiche del materiale

(Circolare 7 21-01-19 C8.5.I) Muratura in mattoni pieni e malta di calce LC2_Corti

fb	fk	fvk0	fmedio	τ0	fv0	μ	ϕ	fv,lim	E	G	FC
600000			345000	9000	20000	0.58	0.77	32500	320000000	128000000	1.2

Verifica a pressoflessione nel piano secondo D.M. 17-01-18 NTC §7.8.2.2.1 in combinazioni non sismiche, γM = 3

Comb.	Quota	N	M	σ0	Mu	c.s.	Verifica
SLU 74	3.32	-11613	-352.78	81326	4.8	0.014	No, M>Mu
SLU 74	4.12	-11974	635.49	83849	0	0	No, Rottura per schiacciamento
SLU 82	3.32	-11797	-292.75	82614	0	0	No, Rottura per schiacciamento
SLU 82	4.12	-12048	594.82	84367	0	0	No, Rottura per schiacciamento
SLU 83	3.32	-12030	-360.8	84241	0	0	No, Rottura per schiacciamento
SLU 83	4.12	-12421	649.54	86982	0	0	No, Rottura per schiacciamento
SLU 78	3.32	-11529	-288.7	80732	26.2	0.091	No, M>Mu
SLU 78	4.12	-11749	588.13	82273	0	0	No, Rottura per schiacciamento
SLU 79	3.32	-11584	-350.56	81124	12.14	0.035	No, M>Mu
SLU 79	4.12	-11940	630.84	83616	0	0	No, Rottura per schiacciamento
SLU 80	3.32	-11426	-284.5	80013	51.69	0.182	No, M>Mu
SLU 80	4.12	-11641	579.8	81520	0	0	No, Rottura per schiacciamento
SLU 77	3.32	-11687	-354.76	81843	0	0	No, Rottura per schiacciamento
SLU 77	4.12	-12048	639.17	84369	0	0	No, Rottura per schiacciamento
SLU 75	3.32	-11455	-286.71	80216	44.55	0.155	No, M>Mu
SLU 75	4.12	-11674	584.45	81753	0	0	No, Rottura per schiacciamento
SLU 81	3.32	-11956	-358.81	83724	0	0	No, Rottura per schiacciamento
SLU 81	4.12	-12347	645.86	86462	0	0	No, Rottura per schiacciamento
SLU 84	3.32	-11871	-294.73	83131	0	0	No, Rottura per schiacciamento
SLU 84	4.12	-12122	598.5	84887	0	0	No, Rottura per schiacciamento

Verifica a pressoflessione nel piano secondo D.M. 17-01-18 NTC §7.8.2.2.1 in combinazioni sismiche, γM = 2

Comb.	Quota	N	M	σ0	Mu	c.s.	Verifica
SLV 15	3.32	-4800	-1078.84	33610	887.23	0.822	No, M>Mu
SLV 15	4.12	-5709	1555.41	0	0	0	No, e>l/2
SLV 16	3.32	-4800	-1078.84	33610	887.23	0.822	No, M>Mu
SLV 16	4.12	-5709	1555.41	0	0	0	No, e>l/2

Comb.	Quota	N	M	σ0	Mu	c.s.	Verifica
SLV 9	3.32	-10020	-467.45	70166	1087.8	2.327	Si
SLV 9	4.12	-9053	1117.2	63399	1110.75	0.994	No, M>Mu
SLV 14	3.32	-6450	-1063.19	45168	1036.75	0.975	No, M>Mu
SLV 14	4.12	-6593	1743.33	0	0	0	No, e>l/2
SLV 4	3.32	-9497	571.11	66508	1103.6	1.932	Si
SLV 4	4.12	-9791	-859.9	68564	1095.71	1.274	Si
SLV 10	3.32	-10020	-467.45	70166	1087.8	2.327	Si
SLV 10	4.12	-9053	1117.2	63399	1110.75	0.994	No, M>Mu
SLV 2	3.32	-11148	586.76	78066	1026.49	1.749	Si
SLV 2	4.12	-10675	-671.99	74755	1056.72	1.573	Si
SLV 13	3.32	-6450	-1063.19	45168	1036.75	0.975	No, M>Mu
SLV 13	4.12	-6593	1743.33	0	0	0	No, e>l/2
SLV 3	3.32	-9497	571.11	66508	1103.6	1.932	Si
SLV 3	4.12	-9791	-859.9	68564	1095.71	1.274	Si
SLV 1	3.32	-11148	586.76	78066	1026.49	1.749	Si
SLV 1	4.12	-10675	-671.99	74755	1056.72	1.573	Si

Verifica a taglio nel piano secondo D.M. 17-01-18 (N.T.C.) §7.8.2.2.2 con rottura per scorrimento in combinazioni non sismiche, γM = 3

Comb.	Quota	N	V par	M	σ0	σN	l'	fvd	Vt scorr.	Vt fess.diag.	Vt,lim	c.s.	Verifica
SLU 74	3.32	-11613	-1291	-352.78		81326	0.51	10833	1547			1.2	Si
SLU 74	4.12	-11974	-1283	635.49		83849	0.51	10833	1547			1.21	Si
SLU 69	3.32	-10476	-1190	-326.25		73364	0.51	10833	1547			1.3	Si
SLU 69	4.12	-10753	-1183	586.95		75300	0.51	10833	1547			1.31	Si
SLU 77	3.32	-11687	-1298	-354.76		81843	0.51	10833	1547			1.19	Si
SLU 77	4.12	-12048	-1290	639.17		84369	0.51	10833	1547			1.2	Si
SLU 56	3.32	-10601	-1182	-323.91		74239	0.51	10833	1547			1.31	Si
SLU 56	4.12	-10900	-1175	581.66		76330	0.51	10833	1547			1.32	Si
SLU 81	3.32	-11956	-1314	-358.81		83724	0.51	10833	1547			1.18	Si
SLU 81	4.12	-12347	-1306	645.86		86462	0.51	10833	1547			1.18	Si
SLU 60	3.32	-10870	-1198	-327.96		76121	0.51	10833	1547			1.29	Si
SLU 60	4.12	-11199	-1191	588.35		78424	0.51	10833	1547			1.3	Si
SLU 62	3.32	-10944	-1206	-329.94		76638	0.51	10833	1547			1.28	Si
SLU 62	4.12	-11273	-1198	592.03		78944	0.51	10833	1547			1.29	Si
SLU 66	3.32	-10403	-1183	-324.26		72848	0.51	10833	1547			1.31	Si
SLU 66	4.12	-10679	-1176	583.27		74780	0.51	10833	1547			1.32	Si
SLU 83	3.32	-12030	-1322	-360.8		84241	0.51	10833	1547			1.17	Si
SLU 83	4.12	-12421	-1313	649.54		86982	0.51	10833	1547			1.18	Si
SLU 79	3.32	-11584	-1282	-350.56		81124	0.51	10833	1547			1.21	Si
SLU 79	4.12	-11940	-1274	630.84		83616	0.51	10833	1547			1.21	Si

Verifica a taglio nel piano secondo D.M. 17-01-18 (N.T.C.) §7.8.2.2.2 con rottura per scorrimento in combinazioni sismiche, γM = 2

Comb.	Quota	N	V par	M	σ0	σN	l'	fvd	Vt scorr.	Vt fess.diag.	Vt,lim	c.s.	Verifica
SLV 11	3.32	-4518	-2050	-519.61		38421	0.42	16018	1884			0.92	No, Vu<V
SLV 11	4.12	-6106	-2025	490.82		42762	0.51	16250	2321			1.15	Si
SLV 12	3.32	-4518	-2050	-519.61		38421	0.42	16018	1884			0.92	No, Vu<V
SLV 12	4.12	-6106	-2025	490.82		42762	0.51	16250	2321			1.15	Si
SLV 1	3.32	-11148	1755	586.76		78066	0.51	16250	2321			1.32	Si
SLV 1	4.12	-10675	1839	-671.99		74755	0.51	16250	2321			1.26	Si
SLV 10	3.32	-10020	-1266	-467.45		70166	0.51	16250	2321			1.83	Si
SLV 10	4.12	-9053	-1336	1117.2		81899	0.3948	16250	1796			1.34	Si
SLV 2	3.32	-11148	1755	586.76		78066	0.51	16250	2321			1.32	Si
SLV 2	4.12	-10675	1839	-671.99		74755	0.51	16250	2321			1.26	Si
SLV 16	3.32	-4800	-3550	-1078.84		189070	0.0907	16250	413			0.12	No, Vu<V
SLV 16	4.12	-5709	-3623	1555.41		0	0	8333	0			0	No, Vu<V
SLV 13	3.32	-6450	-3315	-1063.19		85162	0.2705	16250	1231			0.37	No, Vu<V
SLV 13	4.12	-6593	-3416	1743.33		0	0	8333	0			0	No, Vu<V
SLV 14	3.32	-6450	-3315	-1063.19		85162	0.2705	16250	1231			0.37	No, Vu<V
SLV 14	4.12	-6593	-3416	1743.33		0	0	8333	0			0	No, Vu<V
SLV 9	3.32	-10020	-1266	-467.45		70166	0.51	16250	2321			1.83	Si
SLV 9	4.12	-9053	-1336	1117.2		81899	0.3948	16250	1796			1.34	Si
SLV 15	3.32	-4800	-3550	-1078.84		189070	0.0907	16250	413			0.12	No, Vu<V
SLV 15	4.12	-5709	-3623	1555.41		0	0	8333	0			0	No, Vu<V

Verifica a pressoflessione fuori piano D.M. 17-01-18 (N.T.C.)

quota 3.16 Wa 0.05 denominatore 8 γM = 2

Comb.	fd	Sa	σ0	N	M	Mc	Coeff.s.	Verifica
SLV 12	143750	0.31	28686	-4096	46.05	438.85	9.53	Si
SLV 11	143750	0.31	28686	-4096	46.05	438.85	9.53	Si
SLV 7	143750	0.31	32379	-4624	46.05	475.78	10.33	Si
SLV 8	143750	0.31	32379	-4624	46.05	475.78	10.33	Si
SLV 16	143750	0.31	37209	-5313	46.05	517.36	11.23	Si
SLV 15	143750	0.31	37209	-5313	46.05	517.36	11.23	Si
SLV 13	143750	0.31	48208	-6884	46.05	583.53	12.67	Si
SLV 14	143750	0.31	48208	-6884	46.05	583.53	12.67	Si
SLV 4	143750	0.31	49520	-7071	46.05	588.78	12.79	Si
SLV 3	143750	0.31	49520	-7071	46.05	588.78	12.79	Si

Verifica dei meccanismi locali di collasso con analisi cinematica lineare

forza di aggancio al piano = 0 quota mezzeria = 3.16 Wa = 0.05 Ta = 0.0808

Comb.	N top	N base	V orto	α0	M*	e*	a0*	aLim	Verifica
SLV 4	-3661	-6791	-3	0.042	446.9	0.952	0.63533	8.50261	No
SLV 3	-3661	-6791	-3	0.042	446.9	0.952	0.63533	8.50261	No
SLV 2	-3639	-9008	-1	0.042	444.7	0.952	0.64246	8.50261	No
SLV 1	-3639	-9008	-1	0.042	444.7	0.952	0.64246	8.50261	No
SLV 15	-2383	-6945	-4	0.043	317.4	0.935	0.66487	8.50261	No
SLV 16	-2383	-6945	-4	0.043	317.4	0.935	0.66487	8.50261	No
SLV 13	-2361	-9162	-3	0.043	315.2	0.935	0.6756	8.50261	No
SLV 14	-2361	-9162	-3	0.043	315.2	0.935	0.6756	8.50261	No
SLV 8	-3239	-4259	-6	0.041	404.2	0.947	0.63413	7.42296	No

Comb.	N top	N base	V orto	α0	M*	e*	a0*	aLim	Verifica
SLV 7	-3239	-4259	-6	0.041	404.2	0.947	0.63413	7.42296	No

Tabella dei coefficienti di sicurezza minimi

Stato limite	Coeff.s.	Comb.	Verifica
PF_SLU	0	SLU 74	No
V_SLU	1.171	SLU 83	Si
PF_SLV	0	SLV 13	No
V_SLV	0	SLV 13	No
PFFP_SLV	9.53	SLV 11	Si
R_SLV	0.075	SLV 3	No

Maschio 57

Verifiche condotte secondo D.M. 17-01-18 (N.T.C.)

Dati geometrici

X ini.	Y ini.	X fin.	Y fin.	Quota i.	Quota.s	l	Sp.	h netta	h ini.	h fin.	a	a.s.,sx	a.s.,dx
-19.663	5.937	-19.663	6.64	L3	L4	0.703	0.28	3.68	3.68	3.68			

Caratteristiche del materiale

(Circolare 7 21-01-19 C8.5.I) Muratura in mattoni pieni e malta di calce LC2_Corti

fb	fk	fvk0	fmedio	τ0	fv0	μ	ϕ	fv,lim	E	G	FC
600000			345000	9000	20000	0.58	0.77	32500	320000000	128000000	1.2

Verifica a pressoflessione nel piano secondo D.M. 17-01-18 NTC §7.8.2.2.1 in combinazioni non sismiche, γM = 3

Comb.	Quota	N	M	σ0	Mu	c.s.	Verifica
SLU 57	1.32	-26932	-1336.71	136854	0	0	No, Rottura per schiacciamento
SLU 57	5	-9553	150.78	48540	1356.58	8.997	Si
SLU 1	1.32	-18422	-906.46	93612	0	0	No, Rottura per schiacciamento
SLU 1	5	-6410	96.35	32571	1351.86	14.03	Si
SLU 59	1.32	-26703	-1325.05	135690	0	0	No, Rottura per schiacciamento
SLU 59	5	-9452	149.74	48029	1363.13	9.103	Si
SLU 54	1.32	-26417	-1311.2	134238	0	0	No, Rottura per schiacciamento
SLU 54	5	-9327	147.41	47396	1370.65	9.298	Si
SLU 53	1.32	-26429	-1314.79	134299	0	0	No, Rottura per schiacciamento
SLU 53	5	-9333	147.69	47424	1370.33	9.278	Si
SLU 55	1.32	-26180	-1297.15	133033	0	0	No, Rottura per schiacciamento
SLU 55	5	-9223	146.19	46866	1376.4	9.415	Si
SLU 61	1.32	-26811	-1337.9	136236	0	0	No, Rottura per schiacciamento
SLU 61	5	-9442	153.85	47978	1363.76	8.864	Si
SLU 58	1.32	-26715	-1328.64	135751	0	0	No, Rottura per schiacciamento
SLU 58	5	-9457	150.02	48057	1362.78	9.084	Si
SLU 56	1.32	-26944	-1340.3	136915	0	0	No, Rottura per schiacciamento
SLU 56	5	-9558	151.06	48568	1356.2	8.978	Si
SLU 60	1.32	-26823	-1341.49	136297	0	0	No, Rottura per schiacciamento
SLU 60	5	-9447	154.12	48006	1363.42	8.846	Si

Verifica a pressoflessione nel piano secondo D.M. 17-01-18 NTC §7.8.2.2.1 in combinazioni sismiche, γM = 2

Comb.	Quota	N	M	σ0	Mu	c.s.	Verifica
SLV 8	1.32	-30090	-1217.25	152899	0	0	No, Rottura per schiacciamento
SLV 8	5	-10732	-5.08	54535	2088.22	411.319	Si
SLV 6	1.32	-10502	-1530.74	53367	2078.78	1.358	Si
SLV 6	5	-4204	468.84	21360	1219	2.6	Si
SLV 7	1.32	-30090	-1217.25	152899	0	0	No, Rottura per schiacciamento
SLV 7	5	-10732	-5.08	54535	2088.22	411.319	Si
SLV 11	1.32	-29387	-450.28	149327	0	0	No, Rottura per schiacciamento
SLV 11	5	-9792	-249.56	49759	2039.85	8.174	Si
SLV 5	1.32	-10502	-1530.74	53367	2078.78	1.358	Si
SLV 5	5	-4204	468.84	21360	1219	2.6	Si
SLV 3	1.32	-24054	-2221.78	122230	0	0	No, Rottura per schiacciamento
SLV 3	5	-9544	446.02	48496	2022.74	4.535	Si
SLV 4	1.32	-24054	-2221.78	122230	0	0	No, Rottura per schiacciamento
SLV 4	5	-9544	446.02	48496	2022.74	4.535	Si
SLV 2	1.32	-18178	-2315.83	92371	1558.88	0.673	No, M>Mu
SLV 2	5	-7585	588.2	38543	1824.75	3.102	Si
SLV 12	1.32	-29387	-450.28	149327	0	0	No, Rottura per schiacciamento
SLV 12	5	-9792	-249.56	49759	2039.85	8.174	Si
SLV 1	1.32	-18178	-2315.83	92371	1558.88	0.673	No, M>Mu
SLV 1	5	-7585	588.2	38543	1824.75	3.102	Si

Verifica a taglio nel piano secondo D.M. 17-01-18 (N.T.C.) §7.8.2.2.2 con rottura per scorrimento in combinazioni non sismiche, γM = 3

Comb.	Quota	N	V par	M	σ0	σN	l'	fvd	Vt scorr.	Vt fess.diag.	Vt,lim	c.s.	Verifica
SLU 78	1.32	-29607	251	-1481.88		150444	0.7028	10833	2132			8.49	Si
SLU 78	5	-10584	-804	171.98		53780	0.7028	10833	2132			2.65	Si
SLU 82	1.32	-29485	222	-1483.08		149826	0.7028	10833	2132			9.59	Si
SLU 82	5	-10473	-824	175.05		53218	0.7028	10833	2132			2.59	Si
SLU 79	1.32	-29390	246	-1473.82		149340	0.7028	10833	2132			8.67	Si
SLU 79	5	-10489	-800	171.21		53298	0.7028	10833	2132			2.66	Si
SLU 81	1.32	-29497	219	-1486.67		149887	0.7028	10833	2132			9.74	Si
SLU 81	5	-10479	-826	175.32		53247	0.7028	10833	2132			2.58	Si
SLU 84	1.32	-30000	230	-1508.58		152442	0.7028	10833	2132			9.28	Si
SLU 84	5	-10698	-838	178.41		54363	0.7028	10833	2132			2.54	Si
SLU 74	1.32	-29104	240	-1459.97		147888	0.7028	10833	2132			8.88	Si
SLU 74	5	-10364	-792	168.89		52664	0.7028	10833	2132			2.69	Si
SLU 80	1.32	-29378	249	-1470.22		149280	0.7028	10833	2132			8.55	Si
SLU 80	5	-10483	-798	170.94		53269	0.7028	10833	2132			2.67	Si
SLU 77	1.32	-29619	248	-1485.47		150504	0.7028	10833	2132			8.61	Si
SLU 77	5	-10589	-806	172.26		53809	0.7028	10833	2132			2.64	Si
SLU 83	1.32	-30012	226	-1512.17		152503	0.7028	10833	2132			9.42	Si
SLU 83	5	-10704	-840	178.69		54391	0.7028	10833	2132			2.54	Si
SLU 75	1.32	-29092	244	-1456.38		147828	0.7028	10833	2132			8.75	Si
SLU 75	5	-10358	-790	168.61		52636	0.7028	10833	2132			2.7	Si

Verifica a taglio nel piano secondo D.M. 17-01-18 (N.T.C.) §7.8.2.2.2 con rottura per scorrimento in combinazioni sismiche, γM = 2

Comb.	Quota	N	V par	M	σ0	σN	l'	fvd	Vt scorr.	Vt fess.diag.	Vt,lim	c.s.	Verifica
SLV 1	1.32	-18178	-4264	-2315.83		96599	0.6721	16250	3058			0.72	No, Vu<V
SLV 1	5	-7585	-3503	588.2		38543	0.7028	16042	3157			0.9	No, Vu<V
SLV 5	1.32	-10502	-4545	-1530.74		60791	0.617	16250	2807			0.62	No, Vu<V
SLV 5	5	-4204	-3397	468.84		21360	0.7028	12605	2481			0.73	No, Vu<V
SLV 11	1.32	-29387	4932	-450.28		149327	0.7028	16250	3198			0.65	No, Vu<V
SLV 11	5	-9792	2380	-249.56		49759	0.7028	16250	3198			1.34	Si
SLV 7	1.32	-30090	2930	-1217.25		152899	0.7028	16250	3198			1.09	Si
SLV 7	5	-10732	977	-5.08		54535	0.7028	16250	3198			3.27	Si
SLV 16	1.32	-21711	4651	334.81		110323	0.7028	16250	3198			0.69	No, Vu<V
SLV 16	5	-6411	2486	-368.92		32576	0.7028	14849	2922			1.18	Si
SLV 15	1.32	-21711	4651	334.81		110323	0.7028	16250	3198			0.69	No, Vu<V
SLV 15	5	-6411	2486	-368.92		32576	0.7028	14849	2922			1.18	Si
SLV 2	1.32	-18178	-4264	-2315.83		96599	0.6721	16250	3058			0.72	No, Vu<V
SLV 2	5	-7585	-3503	588.2		38543	0.7028	16042	3157			0.9	No, Vu<V
SLV 12	1.32	-29387	4932	-450.28		149327	0.7028	16250	3198			0.65	No, Vu<V
SLV 12	5	-9792	2380	-249.56		49759	0.7028	16250	3198			1.34	Si
SLV 6	1.32	-10502	-4545	-1530.74		60791	0.617	16250	2807			0.62	No, Vu<V
SLV 6	5	-4204	-3397	468.84		21360	0.7028	12605	2481			0.73	No, Vu<V
SLV 8	1.32	-30090	2930	-1217.25		152899	0.7028	16250	3198			1.09	Si
SLV 8	5	-10732	977	-5.08		54535	0.7028	16250	3198			3.27	Si

Verifica a pressoflessione fuori piano D.M. 17-01-18 (N.T.C.)

quota 3.16 Wa 0.05 denominatore 8 γM = 2

Comb.	fd	Sa	σ0	N	M	Mc	Coeff.s.	Verifica
SLV 9	143750	0.31	20047	-3945	64.94	461.7	7.11	Si
SLV 10	143750	0.31	20047	-3945	64.94	461.7	7.11	Si
SLV 6	143750	0.31	25854	-5088	64.94	561.6	8.65	Si
SLV 5	143750	0.31	25854	-5088	64.94	561.6	8.65	Si
SLV 14	143750	0.31	31726	-6244	64.94	647.14	9.97	Si
SLV 13	143750	0.31	31726	-6244	64.94	647.14	9.97	Si
SLV 8	143750	0.31	78583	-15465	64.94	772.64	11.9	Si
SLV 7	143750	0.31	78583	-15465	64.94	772.64	11.9	Si
SLV 15	143750	0.31	47545	-9357	64.94	800.22	12.32	Si
SLV 16	143750	0.31	47545	-9357	64.94	800.22	12.32	Si

Verifica dei meccanismi locali di collasso con analisi cinematica lineare

forza di aggancio al piano = 0 quota mezzeria = 3.16 Wa = 0.05 Ta = 0.0808

Comb.	N top	N base	V orto	α0	M*	e*	a0*	aLim	Verifica
SLV 3	-9544	-24054	1	0.04	1073.6	0.971	0.60372	8.50261	No
SLV 4	-9544	-24054	1	0.04	1073.6	0.971	0.60372	8.50261	No
SLV 1	-7585	-18178	1	0.041	874.2	0.965	0.61736	8.50261	No
SLV 2	-7585	-18178	1	0.041	874.2	0.965	0.61736	8.50261	No
SLV 15	-6411	-21711	2	0.041	754.8	0.96	0.62525	8.50261	No
SLV 16	-6411	-21711	2	0.041	754.8	0.96	0.62525	8.50261	No
SLV 14	-4452	-15835	1	0.043	555.8	0.947	0.65533	8.50261	No
SLV 13	-4452	-15835	1	0.043	555.8	0.947	0.65533	8.50261	No
SLV 7	-10732	-30090	3	0.04	1194.7	0.974	0.5969	7.42296	No
SLV 8	-10732	-30090	3	0.04	1194.7	0.974	0.5969	7.42296	No

Tabella dei coefficienti di sicurezza minimi

Stato limite	Coeff.s.	Comb.	Verifica
PF_SLU	0	SLU 1	No
V_SLU	2.537	SLU 83	Si
PF_SLV	0	SLV 3	No
V_SLV	0.618	SLV 5	No
PFFP_SLV	7.11	SLV 9	Si
R_SLV	0.071	SLV 3	No

Maschio 58

Verifiche condotte secondo D.M. 17-01-18 (N.T.C.)

Dati geometrici

X ini.	Y ini.	X fin.	Y fin.	Quota i.	Quota.s	l	Sp.	h netta	h ini.	h fin.	a	a.s.,sx	a.s.,dx
-19.57	1.141	-19.57	5.797	L3	L4	4.656	0.14	3.68	3.68	3.68			

Caratteristiche del materiale

(Circolare 7 21-01-19 C8.5.I) Muratura in mattoni pieni e malta di calce LC2_Corti

fb	fk	fvk0	fmedio	τ0	fv0	μ	ϕ	fv,lim	E	G	FC
600000			345000	9000	20000	0.58	0.77	32500	320000000	128000000	1.2

Verifica a pressoflessione nel piano secondo D.M. 17-01-18 NTC §7.8.2.2.1 in combinazioni non sismiche, γM = 3

Comb.	Quota	N	M	σ0	Mu	c.s.	Verifica
SLU 75	1.32	-26632	17653.7	40858	30901.99	1.75	Si
SLU 75	5	-27165	2502.58	41675	30885.65	12.342	Si
SLU 77	1.32	-27182	17969.52	41701	30884.71	1.719	Si
SLU 77	5	-27890	2452.48	42787	30823.41	12.568	Si
SLU 78	1.32	-27106	17979.7	41585	30888.66	1.718	Si
SLU 78	5	-27819	2507.3	42678	30831.54	12.297	Si
SLU 84	1.32	-27538	18158.19	42247	30859.35	1.699	Si
SLU 84	5	-28035	2531.32	43010	30805.4	12.17	Si
SLU 81	1.32	-27140	17822.01	41636	30886.96	1.733	Si
SLU 81	5	-27452	2471.78	42115	30866.51	12.488	Si
SLU 79	1.32	-26966	17825.71	41369	30894.67	1.733	Si
SLU 79	5	-27593	2443.17	42332	30854.47	12.629	Si
SLU 83	1.32	-27614	18148.01	42364	30852.54	1.7	Si
SLU 83	5	-28106	2476.5	43119	30795.92	12.435	Si
SLU 80	1.32	-26890	17835.9	41253	30897.18	1.732	Si
SLU 80	5	-27522	2497.99	42223	30860.75	12.354	Si
SLU 82	1.32	-27064	17832.19	41520	30890.63	1.732	Si
SLU 82	5	-27381	2526.6	42006	30871.91	12.219	Si
SLU 74	1.32	-26708	17643.52	40974	30901.18	1.751	Si
SLU 74	5	-27236	2447.76	41783	30881.59	12.616	Si

Verifica a pressoflessione nel piano secondo D.M. 17-01-18 NTC §7.8.2.2.1 in combinazioni sismiche, γM = 2

Comb.	Quota	N	M	σ0	Mu	c.s.	Verifica
SLV 7	1.32	-23889	18259.79	36649	38932.25	2.132	Si
SLV 7	5	-24301	1800.07	37280	39310.87	21.839	Si
SLV 14	1.32	-9206	12174.4	14123	18953.75	1.557	Si
SLV 14	5	-10982	1097.55	16848	22040.64	20.082	Si
SLV 15	1.32	-11200	16222.14	17182	22406.67	1.381	Si
SLV 15	5	-13495	952.78	20703	26093.24	27.386	Si
SLV 13	1.32	-9206	12174.4	14123	18953.75	1.557	Si
SLV 13	5	-10982	1097.55	16848	22040.64	20.082	Si
SLV 4	1.32	-27142	12091.81	41640	41653.26	3.445	Si
SLV 4	5	-25608	2516.14	39286	40447.29	16.075	Si
SLV 11	1.32	-19106	19498.89	29311	33808.72	1.734	Si
SLV 11	5	-20667	1331.06	31706	35627.51	26.766	Si
SLV 12	1.32	-19106	19498.89	29311	33808.72	1.734	Si
SLV 12	5	-20667	1331.06	31706	35627.51	26.766	Si
SLV 16	1.32	-11200	16222.14	17182	22406.67	1.381	Si
SLV 16	5	-13495	952.78	20703	26093.24	27.386	Si
SLV 8	1.32	-23889	18259.79	36649	38932.25	2.132	Si
SLV 8	5	-24301	1800.07	37280	39310.87	21.839	Si
SLV 3	1.32	-27142	12091.81	41640	41653.26	3.445	Si
SLV 3	5	-25608	2516.14	39286	40447.29	16.075	Si

Verifica a taglio nel piano secondo D.M. 17-01-18 (N.T.C.) §7.8.2.2.2 con rottura per scorrimento in combinazioni non sismiche, γM = 3

Comb.	Quota	N	V par	M	σ0	σN	l'	fvd	Vt scorr.	Vt fess.diag.	Vt,lim	c.s.	Verifica
SLU 75	1.32	-26632	2262	17653.7		40858	4.656	10833	7062			3.12	Si
SLU 75	5	-27165	1259	2502.58		41675	4.656	10833	7062			5.61	Si
SLU 76	1.32	-26366	2256	17516.69		40449	4.656	10833	7062			3.13	Si
SLU 76	5	-26821	1266	2529.81		41146	4.656	10833	7062			5.58	Si
SLU 79	1.32	-26966	2280	17825.71		41369	4.656	10833	7062			3.1	Si
SLU 79	5	-27593	1265	2443.17		42332	4.656	10833	7062			5.58	Si
SLU 81	1.32	-27140	2289	17822.01		41636	4.656	10833	7062			3.09	Si
SLU 81	5	-27452	1265	2471.78		42115	4.656	10833	7062			5.58	Si
SLU 80	1.32	-26890	2299	17835.9		41253	4.656	10833	7062			3.07	Si
SLU 80	5	-27522	1289	2497.99		42223	4.656	10833	7062			5.48	Si
SLU 82	1.32	-27064	2307	17832.19		41520	4.656	10833	7062			3.06	Si
SLU 82	5	-27381	1289	2526.6		42006	4.656	10833	7062			5.48	Si
SLU 77	1.32	-27182	2298	17969.52		41701	4.656	10833	7062			3.07	Si
SLU 77	5	-27890	1274	2452.48		42787	4.656	10833	7062			5.54	Si
SLU 84	1.32	-27538	2362	18158.19		42247	4.656	10833	7062			2.99	Si
SLU 84	5	-28035	1327	2531.32		43010	4.656	10833	7062			5.32	Si
SLU 83	1.32	-27614	2344	18148.01		42364	4.656	10833	7062			3.01	Si
SLU 83	5	-28106	1303	2476.5		43119	4.656	10833	7062			5.42	Si
SLU 78	1.32	-27106	2316	17979.7		41585	4.656	10833	7062			3.05	Si
SLU 78	5	-27819	1297	2507.3		42678	4.656	10833	7062			5.44	Si

Verifica a taglio nel piano secondo D.M. 17-01-18 (N.T.C.) §7.8.2.2.2 con rottura per scorrimento in combinazioni sismiche, γM = 2

Comb.	Quota	N	V par	M	σ0	σN	l'	fvd	Vt scorr.	Vt fess.diag.	Vt,lim	c.s.	Verifica
SLV 10	1.32	-12459	-16455	6006.41		19114	4.656	12156	7924			0.48	No, Vu<V
SLV 10	5	-12289	-13194	1813.63		18854	4.656	12104	7890			0.6	No, Vu<V
SLV 7	1.32	-23889	19415	18259.79		36649	4.656	15663	10210			0.53	No, Vu<V
SLV 7	5	-24301	14780	1800.07		37280	4.656	15789	10292			0.7	No, Vu<V
SLV 13	1.32	-9206	-6492	12174.4		21799	3.0165	12693	5360			0.83	No, Vu<V
SLV 13	5	-10982	-7460	1097.55		16848	4.656	11703	7628			1.02	Si
SLV 6	1.32	-17242	-14747	4767.31		26451	4.656	13624	8880			0.6	No, Vu<V
SLV 6	5	-15923	-10518	2282.64		24428	4.656	13219	8617			0.82	No, Vu<V
SLV 9	1.32	-12459	-16455	6006.41		19114	4.656	12156	7924			0.48	No, Vu<V

Comb.	Quota	N	V par	M	σ0	σN	l'	fvd	Vt scorr.	Vt fess.diag.	Vt,lim	c.s.	Verifica
SLV 9	5	-12289	-13194	1813.63		18854	4.656	12104	7890			0.6	No, Vu<V
SLV 11	1.32	-19106	17707	19498.89		34794	3.9223	15292	8397			0.47	No, Vu<V
SLV 11	5	-20667	12104	1331.06		31706	4.656	14674	9565			0.79	No, Vu<V
SLV 12	1.32	-19106	17707	19498.89		34794	3.9223	15292	8397			0.47	No, Vu<V
SLV 12	5	-20667	12104	1331.06		31706	4.656	14674	9565			0.79	No, Vu<V
SLV 14	1.32	-9206	-6492	12174.4		21799	3.0165	12693	5360			0.83	No, Vu<V
SLV 14	5	-10982	-7460	1097.55		16848	4.656	11703	7628			1.02	Si
SLV 8	1.32	-23889	19415	18259.79		36649	4.656	15663	10210			0.53	No, Vu<V
SLV 8	5	-24301	14780	1800.07		37280	4.656	15789	10292			0.7	No, Vu<V
SLV 5	1.32	-17242	-14747	4767.31		26451	4.656	13624	8880			0.6	No, Vu<V
SLV 5	5	-15923	-10518	2282.64		24428	4.656	13219	8617			0.82	No, Vu<V

Verifica a pressoflessione fuori piano D.M. 17-01-18 (N.T.C.)

quota 3.16 Wa 0.03 denominatore 8 γM = 2

Comb.	fd	Sa	σ0	N	M	Mc	Coeff.s.	Verifica
SLV 13	143750	0.31	20753	-13528	224.87	786.1	3.5	Si
SLV 14	143750	0.31	20753	-13528	224.87	786.1	3.5	Si
SLV 10	143750	0.31	22549	-14698	224.87	838.99	3.73	Si
SLV 9	143750	0.31	22549	-14698	224.87	838.99	3.73	Si
SLV 16	143750	0.31	24779	-16152	224.87	901.33	4.01	Si
SLV 15	143750	0.31	24779	-16152	224.87	901.33	4.01	Si
SLV 6	143750	0.31	28114	-18325	224.87	987.63	4.39	Si
SLV 5	143750	0.31	28114	-18325	224.87	987.63	4.39	Si
SLV 11	143750	0.31	35968	-23445	224.87	1158.06	5.15	Si
SLV 12	143750	0.31	35968	-23445	224.87	1158.06	5.15	Si

Verifica dei meccanismi locali di collasso con analisi cinematica lineare

forza di aggancio al piano = 0 quota mezzeria = 3.16 Wa = 0.03 Ta = 0.1615

Comb.	N top	N base	V orto	α0	M*	e*	a0*	aLim	Verifica
SLV 14	-10982	-9206	-53	0.018	1459.4	0.936	0.28088	14.13539	No
SLV 13	-10982	-9206	-53	0.018	1459.4	0.936	0.28088	14.13539	No
SLV 3	-25608	-27142	49	0.019	2945	0.965	0.282	14.13539	No
SLV 4	-25608	-27142	49	0.019	2945	0.965	0.282	14.13539	No
SLV 2	-23095	-25148	37	0.019	2689.2	0.962	0.28942	14.13539	No
SLV 1	-23095	-25148	37	0.019	2689.2	0.962	0.28942	14.13539	No
SLV 15	-13495	-11200	-42	0.019	1713.9	0.944	0.29224	14.13539	No
SLV 16	-13495	-11200	-42	0.019	1713.9	0.944	0.29224	14.13539	No
SLV 8	-24301	-23889	31	0.019	2811.9	0.964	0.29259	14.13539	No
SLV 7	-24301	-23889	31	0.019	2811.9	0.964	0.29259	14.13539	No

Tabella dei coefficienti di sicurezza minimi

Stato limite	Coeff.s.	Comb.	Verifica
PF_SLU	1.699	SLU 84	Si
V_SLU	2.99	SLU 84	Si
PF_SLV	1.381	SLV 15	Si
V_SLV	0.474	SLV 11	No
PFFP_SLV	3.496	SLV 13	Si
R_SLV	0.02	SLV 13	No

Maschio 59

Verifiche condotte secondo D.M. 17-01-18 (N.T.C.)

Dati geometrici

X ini.	Y ini.	X fin.	Y fin.	Quota i.	Quota.s	l	Sp.	h netta	h ini.	h fin.	a	a.s.,sx	a.s.,dx
-16.187	-3.183	-17.277	-3.183	L3	L4	1.09	0.28	3.68	3.68	3.68			

Caratteristiche del materiale

(Circolare 7 21-01-19 C8.5.I) Muratura in mattoni pieni e malta di calce LC2_Corti

fb	fk	fvk0	fmedio	τ0	fv0	μ	ϕ	fv,lim	E	G	FC
600000			345000	9000	20000	0.58	0.77	32500	320000000	128000000	1.2

Verifica a pressoflessione nel piano secondo D.M. 17-01-18 NTC §7.8.2.2.1 in combinazioni non sismiche, γM = 3

Comb.	Quota	N	M	σ0	Mu	c.s.	Verifica
SLU 74	2.22	-16849	3119.26	55212	2958.61	0.948	No, M>Mu
SLU 74	4.12	-13552	1145.73	44408	3359.19	2.932	Si
SLU 84	2.22	-17295	3087.05	56671	2867.96	0.929	No, M>Mu
SLU 84	4.12	-14067	1203.99	46095	3328.03	2.764	Si
SLU 81	2.22	-17321	3213.78	56756	2862.37	0.891	No, M>Mu
SLU 81	4.12	-13966	1159.89	45763	3335.08	2.875	Si
SLU 79	2.22	-16855	3122.14	55229	2957.55	0.947	No, M>Mu
SLU 79	4.12	-13528	1140.9	44327	3360.4	2.945	Si
SLU 77	2.22	-16978	3140.97	55632	2933.36	0.934	No, M>Mu
SLU 77	4.12	-13653	1156.09	44738	3354.02	2.901	Si
SLU 83	2.22	-17449	3235.49	57177	2834.47	0.876	No, M>Mu
SLU 83	4.12	-14067	1170.24	46093	3328.08	2.844	Si
SLU 80	2.22	-16700	2973.69	54723	2987.01	1.004	Si
SLU 80	4.12	-13528	1174.65	44329	3360.36	2.861	Si
SLU 78	2.22	-16823	2992.53	55126	2963.66	0.99	No, M>Mu
SLU 78	4.12	-13654	1189.84	44740	3353.98	2.819	Si
SLU 82	2.22	-17166	3065.34	56250	2894.99	0.944	No, M>Mu
SLU 82	4.12	-13967	1193.64	45766	3335.04	2.794	Si
SLU 75	2.22	-16695	2970.82	54705	2988.03	1.006	Si
SLU 75	4.12	-13553	1179.48	44410	3359.16	2.848	Si

Verifica a pressoflessione nel piano secondo D.M. 17-01-18 NTC §7.8.2.2.1 in combinazioni sismiche, γM = 2

Comb.	Quota	N	M	σ0	Mu	c.s.	Verifica
SLV 8	2.22	-8191	2922.01	26840	3483.23	1.192	Si
SLV 8	4.12	-4532	-346.25	14852	2169.79	6.267	Si
SLV 7	2.22	-8191	2922.01	26840	3483.23	1.192	Si
SLV 7	4.12	-4532	-346.25	14852	2169.79	6.267	Si
SLV 4	2.22	-16616	4743.32	54446	5020.08	1.058	Si
SLV 4	4.12	-6773	-937.51	22193	3020.51	3.222	Si
SLV 3	2.22	-16616	4743.32	54446	5020.08	1.058	Si
SLV 3	4.12	-6773	-937.51	22193	3020.51	3.222	Si
SLV 6	2.22	-19035	2947.37	62374	5078	1.723	Si
SLV 6	4.12	-13245	1018.5	43401	4654.14	4.57	Si
SLV 1	2.22	-19869	4750.93	65106	5058.32	1.065	Si
SLV 1	4.12	-9386	-528.09	30757	3827.63	7.248	Si
SLV 2	2.22	-19869	4750.93	65106	5058.32	1.065	Si
SLV 2	4.12	-9386	-528.09	30757	3827.63	7.248	Si
SLV 5	2.22	-19035	2947.37	62374	5078	1.723	Si
SLV 5	4.12	-13245	1018.5	43401	4654.14	4.57	Si
SLV 12	2.22	-4223	1368.48	13838	2040.74	1.491	Si
SLV 12	4.12	-5226	569.98	17124	2448.8	4.296	Si
SLV 11	2.22	-4223	1368.48	13838	2040.74	1.491	Si
SLV 11	4.12	-5226	569.98	17124	2448.8	4.296	Si

Verifica a taglio nel piano secondo D.M. 17-01-18 (N.T.C.) §7.8.2.2.2 con rottura per scorrimento in combinazioni non sismiche, γM = 3

Comb.	Quota	N	V par	M	σ0	σN	I'	fvd	Vt scorr.	Vt fess.diag.	Vt,lim	c.s.	Verifica
SLU 62	2.22	-15980	1599	2971.81		52993	1.077	10833	3267			2.04	Si
SLU 62	4.12	-12730	879	1067.12		41714	1.0899	10833	3306			3.76	Si
SLU 56	2.22	-15508	1551	2877.29		51366	1.0783	10833	3271			2.11	Si
SLU 56	4.12	-12316	807	1052.96		40358	1.0899	10833	3306			4.1	Si
SLU 53	2.22	-15380	1533	2855.58		50960	1.0779	10833	3270			2.13	Si
SLU 53	4.12	-12216	808	1042.61		40028	1.0899	10833	3306			4.09	Si
SLU 77	2.22	-16978	1641	3140.97		56150	1.0799	10833	3276			2	Si
SLU 77	4.12	-13653	937	1156.09		44738	1.0899	10833	3306			3.53	Si
SLU 81	2.22	-17321	1671	3213.78		57371	1.0782	10833	3271			1.96	Si
SLU 81	4.12	-13966	1010	1159.89		45763	1.0899	10833	3306			3.27	Si
SLU 58	2.22	-15385	1553	2858.46		50995	1.0775	10833	3268			2.11	Si
SLU 58	4.12	-12191	807	1037.78		39947	1.0899	10833	3306			4.1	Si
SLU 60	2.22	-15851	1581	2950.11		52587	1.0766	10833	3266			2.07	Si
SLU 60	4.12	-12629	879	1056.76		41384	1.0899	10833	3306			3.76	Si
SLU 74	2.22	-16849	1624	3119.26		55745	1.0795	10833	3274			2.02	Si
SLU 74	4.12	-13552	938	1145.73		44408	1.0899	10833	3306			3.53	Si
SLU 79	2.22	-16855	1643	3122.14		55780	1.0792	10833	3273			1.99	Si
SLU 79	4.12	-13528	937	1140.9		44327	1.0899	10833	3306			3.53	Si
SLU 83	2.22	-17449	1689	3235.49		57777	1.0786	10833	3272			1.94	Si
SLU 83	4.12	-14067	1009	1170.24		46093	1.0899	10833	3306			3.28	Si

Verifica a taglio nel piano secondo D.M. 17-01-18 (N.T.C.) §7.8.2.2.2 con rottura per scorrimento in combinazioni sismiche, γM = 2

Comb.	Quota	N	V par	M	σ0	σN	I'	fvd	Vt scorr.	Vt fess.diag.	Vt,lim	c.s.	Verifica
SLV 16	2.22	-3389	-4295	-435.08		11106	1.0899	10555	3221			0.75	No, Vu<V
SLV 16	4.12	-9084	-1249	2116.56		34666	0.9359	15267	4001			3.2	Si
SLV 14	2.22	-6643	-5084	-427.47		21766	1.0899	12687	3872			0.76	No, Vu<V
SLV 14	4.12	-11698	-2370	2525.99		42325	0.9871	16250	4491			1.9	Si
SLV 8	2.22	-8191	4210	2922.01		51806	0.5647	16250	2569			0.61	No, Vu<V
SLV 8	4.12	-4532	3208	-346.25		14852	1.0899	11304	3450			1.08	Si
SLV 3	2.22	-16616	7372	4743.32		76230	0.7785	16250	3542			0.48	No, Vu<V
SLV 3	4.12	-6773	3596	-937.51		22193	1.0899	12772	3898			1.08	Si
SLV 15	2.22	-3389	-4295	-435.08		11106	1.0899	10555	3221			0.75	No, Vu<V
SLV 15	4.12	-9084	-1249	2116.56		34666	0.9359	15267	4001			3.2	Si
SLV 4	2.22	-16616	7372	4743.32		76230	0.7785	16250	3542			0.48	No, Vu<V
SLV 4	4.12	-6773	3596	-937.51		22193	1.0899	12772	3898			1.08	Si
SLV 7	2.22	-8191	4210	2922.01		51806	0.5647	16250	2569			0.61	No, Vu<V
SLV 7	4.12	-4532	3208	-346.25		14852	1.0899	11304	3450			1.08	Si
SLV 13	2.22	-6643	-5084	-427.47		21766	1.0899	12687	3872			0.76	No, Vu<V
SLV 13	4.12	-11698	-2370	2525.99		42325	0.9871	16250	4491			1.9	Si
SLV 2	2.22	-19869	6583	4750.93		77338	0.9175	16250	4175			0.63	No, Vu<V
SLV 2	4.12	-9386	2475	-528.09		30757	1.0899	14485	4420			1.79	Si
SLV 1	2.22	-19869	6583	4750.93		77338	0.9175	16250	4175			0.63	No, Vu<V
SLV 1	4.12	-9386	2475	-528.09		30757	1.0899	14485	4420			1.79	Si

Verifica a pressoflessione fuori piano D.M. 17-01-18 (N.T.C.)

quota 3.16 Wa 0.05 denominatore 8 γM = 2

Comb.	fd	Sa	σ0	N	M	Mc	Coeff.s.	Verifica
SLV 15	143750	0.31	11779	-3595	98.41	454.73	4.62	Si
SLV 16	143750	0.31	11779	-3595	98.41	454.73	4.62	Si
SLV 12	143750	0.31	16213	-4948	98.41	600.79	6.1	Si
SLV 11	143750	0.31	16213	-4948	98.41	600.79	6.1	Si
SLV 14	143750	0.31	20382	-6220	98.41	725.56	7.37	Si
SLV 13	143750	0.31	20382	-6220	98.41	725.56	7.37	Si
SLV 7	143750	0.31	28618	-8733	98.41	936.32	9.51	Si
SLV 8	143750	0.31	28618	-8733	98.41	936.32	9.51	Si
SLV 10	143750	0.31	44891	-13700	98.41	1213.31	12.33	Si
SLV 9	143750	0.31	44891	-13700	98.41	1213.31	12.33	Si

Verifica dei meccanismi locali di collasso con analisi cinematica lineare

forza di aggancio al piano = 0 quota mezzeria = 3.16 Wa = 0.05 Ta = 0.0808

Comb.	N top	N base	V orto	α0	M*	e*	a0*	aLim	Verifica
SLV 15	-7973	-7075	-38	0.038	970.4	0.952	0.58064	8.50261	No
SLV 16	-7973	-7075	-38	0.038	970.4	0.952	0.58064	8.50261	No
SLV 14	-10008	-9556	-17	0.04	1177.2	0.96	0.60592	8.50261	No

Comb.	N top	N base	V orto	α0	M*	e*	a0*	aLim	Verifica
SLV 13	-10008	-9556	-17	0.04	1177.2	0.96	0.60592	8.50261	No
SLV 2	-6447	-10991	20	0.04	815.5	0.945	0.62237	8.50261	No
SLV 1	-6447	-10991	20	0.04	815.5	0.945	0.62237	8.50261	No
SLV 12	-4353	-4683	-51	0.036	603.7	0.929	0.55928	7.42296	No
SLV 11	-4353	-4683	-51	0.036	603.7	0.929	0.55928	7.42296	No
SLV 6	-10067	-13383	33	0.039	1183.2	0.96	0.58346	7.42296	No
SLV 5	-10067	-13383	33	0.039	1183.2	0.96	0.58346	7.42296	No

Tabella dei coefficienti di sicurezza minimi

Stato limite	Coeff.s.	Comb.	Verifica
PF_SLU	0.876	SLU 83	No
V_SLU	1.937	SLU 83	Si
PF_SLV	1.058	SLV 3	Si
V_SLV	0.48	SLV 3	No
PFFP_SLV	4.621	SLV 15	Si
R_SLV	0.068	SLV 15	No

Maschio 60

Verifiche condotte secondo D.M. 17-01-18 (N.T.C.)

Dati geometrici

X ini.	Y ini.	X fin.	Y fin.	Quota i.	Quota.s	l	Sp.	h netta	h ini.	h fin.	a	a.s.,sx	a.s.,dx
-18.448	-3.183	-18.448	1.141	L3	L4	4.324	0.14	3.68	3.68	3.68			

Caratteristiche del materiale

(Circolare 7 21-01-19 C8.5.I) Muratura in mattoni pieni e malta di calce LC2_Corti

fb	fk	fvk0	fmedio	τ0	fv0	μ	ϕ	fv,lim	E	G	FC
600000			345000	9000	20000	0.58	0.77	32500	320000000	128000000	1.2

Verifica a pressoflessione nel piano secondo D.M. 17-01-18 NTC §7.8.2.2.1 in combinazioni non sismiche, γM = 3

Comb.	Quota	N	M	σ0	Mu	c.s.	Verifica
SLU 74	1.32	-38196	-15309.2	63095	18616.21	1.216	Si
SLU 74	5	-25560	-219.95	42222	26617.66	121.019	Si
SLU 78	1.32	-38396	-15973.73	63425	18376.91	1.15	Si
SLU 78	5	-26888	1454.55	44416	26435.12	18.174	Si
SLU 83	1.32	-39461	-15806.1	65186	17043.08	1.078	Si
SLU 83	5	-26513	-18.66	43797	26502.28	1000	Si
SLU 77	1.32	-38640	-15296.6	63830	18079.46	1.182	Si
SLU 77	5	-25968	-22.35	42897	26577.98	1000	Si
SLU 81	1.32	-39017	-15818.71	64451	17611.85	1.113	Si
SLU 81	5	-26105	-216.26	43122	26561.47	122.824	Si
SLU 75	1.32	-37951	-15986.34	62691	18904.11	1.183	Si
SLU 75	5	-26479	1256.96	43741	26507.72	21.089	Si
SLU 80	1.32	-38075	-15859.13	62896	18758.52	1.183	Si
SLU 80	5	-26614	1477.82	43963	26485.49	17.922	Si
SLU 82	1.32	-38772	-16495.84	64047	17917.36	1.086	Si
SLU 82	5	-27024	1260.65	44641	26407.61	20.948	Si
SLU 84	1.32	-39217	-16483.24	64782	17358.14	1.053	Si
SLU 84	5	-27433	1458.24	45316	26315.5	18.046	Si
SLU 76	1.32	-37467	-16323.16	61892	19457.65	1.192	Si
SLU 76	5	-26818	2264.82	44301	26448.54	11.678	Si

Verifica a pressoflessione nel piano secondo D.M. 17-01-18 NTC §7.8.2.2.1 in combinazioni sismiche, γM = 2

Comb.	Quota	N	M	σ0	Mu	c.s.	Verifica
SLV 7	1.32	-27649	7966.45	45674	37433.34	4.699	Si
SLV 7	5	-9601	-14213.25	15859	18062.72	1.271	Si
SLV 11	1.32	-23154	2799.97	38248	34389.38	12.282	Si
SLV 11	5	-4981	-17377.56	0	0	0	No, e>l/2
SLV 14	1.32	-18970	-24186.41	31337	30495.24	1.261	Si
SLV 14	5	-12434	-1285.68	20539	22363.37	17.394	Si
SLV 15	1.32	-18480	-14513.11	30527	29972.46	2.065	Si
SLV 15	5	-6507	-10416.56	10749	12830.48	1.232	Si
SLV 10	1.32	-24786	-29444.38	40944	35631.42	1.21	Si
SLV 10	5	-24738	13058.7	40864	35596.67	2.726	Si
SLV 16	1.32	-18480	-14513.11	30527	29972.46	2.065	Si
SLV 16	5	-6507	-10416.56	10749	12830.48	1.232	Si
SLV 9	1.32	-24786	-29444.38	40944	35631.42	1.21	Si
SLV 9	5	-24738	13058.7	40864	35596.67	2.726	Si
SLV 13	1.32	-18970	-24186.41	31337	30495.24	1.261	Si
SLV 13	5	-12434	-1285.68	20539	22363.37	17.394	Si
SLV 12	1.32	-23154	2799.97	38248	34389.38	12.282	Si
SLV 12	5	-4981	-17377.56	0	0	0	No, e>l/2
SLV 8	1.32	-27649	7966.45	45674	37433.34	4.699	Si
SLV 8	5	-9601	-14213.25	15859	18062.72	1.271	Si

Verifica a taglio nel piano secondo D.M. 17-01-18 (N.T.C.) §7.8.2.2.2 con rottura per scorrimento in combinazioni non sismiche, γM = 3

Comb.	Quota	N	V par	M	σ0	σN	l'	fvd	Vt scorr.	Vt fess.diag.	Vt,lim	c.s.	Verifica
SLU 47	1.32	-30195	-1452	-13672.47		49878	4.324	10833	6558			4.52	Si
SLU 47	5	-21304	-2072	1516.66		35191	4.324	10248	6204			2.99	Si
SLU 10	1.32	-27434	-1520	-12537.03		45318	4.324	10833	6558			4.31	Si
SLU 10	5	-19990	-2048	2085.85		33021	4.324	9958	6028			2.94	Si
SLU 31	1.32	-31005	-1464	-13760.87		51216	4.324	10833	6558			4.48	Si
SLU 31	5	-22640	-2086	2418.64		37400	4.324	10542	6382			3.06	Si
SLU 44	1.32	-29750	-1429	-13685.07		49144	4.324	10833	6558			4.59	Si
SLU 44	5	-20895	-2042	1319.06		34517	4.324	10158	6149			3.01	Si

Comb.	Quota	N	V par	M	σ0	σN	l'	fvd	Vt scorr.	Vt fess.diag.	Vt,lim	c.s.	Verifica
SLU 2	1.32	-23732	-1599	-11110.19		39203	4.324	10783	6527			4.08	Si
SLU 2	5	-17126	-2024	1670.47		28290	4.324	9328	5647			2.79	Si
SLU 5	1.32	-24177	-1621	-11097.58		39938	4.324	10833	6558			4.04	Si
SLU 5	5	-17534	-2054	1868.06		28965	4.324	9418	5701			2.78	Si
SLU 23	1.32	-27303	-1542	-12334.03		45102	4.324	10833	6558			4.25	Si
SLU 23	5	-19777	-2062	2003.25		32669	4.324	9911	6000			2.91	Si
SLU 26	1.32	-27748	-1565	-12321.43		45837	4.324	10833	6558			4.19	Si
SLU 26	5	-20185	-2093	2200.85		33343	4.324	10001	6054			2.89	Si
SLU 34	1.32	-31450	-1487	-13748.27		51951	4.324	10833	6558			4.41	Si
SLU 34	5	-23049	-2116	2616.23		38074	4.324	10632	6436			3.04	Si
SLU 13	1.32	-27878	-1543	-12524.43		46052	4.324	10833	6558			4.25	Si
SLU 13	5	-20398	-2078	2283.45		33696	4.324	10048	6083			2.93	Si

Verifica a taglio nel piano secondo D.M. 17-01-18 (N.T.C.) §7.8.2.2.2 con rottura per scorrimento in combinazioni sismiche, γM = 2

Comb.	Quota	N	V par	M	σ0	σN	l'	fvd	Vt scorr.	Vt fess.diag.	Vt,lim	c.s.	Verifica
SLV 12	1.32	-23154	15083	2799.97		38248	4.324	15983	9675			0.64	No, Vu<V
SLV 12	5	-4981	13163	-17377.56		0	0	8333	0			0	No, Vu<V
SLV 6	1.32	-29282	-13748	-24277.91		52306	3.9988	16250	9097			0.66	No, Vu<V
SLV 6	5	-29357	-13407	16223.01		48495	4.324	16250	9837			0.73	No, Vu<V
SLV 5	1.32	-29282	-13748	-24277.91		52306	3.9988	16250	9097			0.66	No, Vu<V
SLV 5	5	-29357	-13407	16223.01		48495	4.324	16250	9837			0.73	No, Vu<V
SLV 15	1.32	-18480	6736	-14513.11		31961	4.1301	14726	8514			1.26	Si
SLV 15	5	-6507	5043	-10416.56		27608	1.6835	13855	3265			0.65	No, Vu<V
SLV 10	1.32	-24786	-12598	-29444.38		60585	2.9223	16250	6648			0.53	No, Vu<V
SLV 10	5	-24738	-12630	13058.7		40864	4.324	16250	9837			0.78	No, Vu<V
SLV 7	1.32	-27649	13934	7966.45		45674	4.324	16250	9837			0.71	No, Vu<V
SLV 7	5	-9601	12386	-14213.25		33538	2.0447	15041	4306			0.35	No, Vu<V
SLV 8	1.32	-27649	13934	7966.45		45674	4.324	16250	9837			0.71	No, Vu<V
SLV 8	5	-9601	12386	-14213.25		33538	2.0447	15041	4306			0.35	No, Vu<V
SLV 16	1.32	-18480	6736	-14513.11		31961	4.1301	14726	8514			1.26	Si
SLV 16	5	-6507	5043	-10416.56		27608	1.6835	13855	3265			0.65	No, Vu<V
SLV 9	1.32	-24786	-12598	-29444.38		60585	2.9223	16250	6648			0.53	No, Vu<V
SLV 9	5	-24738	-12630	13058.7		40864	4.324	16250	9837			0.78	No, Vu<V
SLV 11	1.32	-23154	15083	2799.97		38248	4.324	15983	9675			0.64	No, Vu<V
SLV 11	5	-4981	13163	-17377.56		0	0	8333	0			0	No, Vu<V

Verifica a pressoflessione fuori piano D.M. 17-01-18 (N.T.C.)

quota 3.16 Wa 0.03 denominatore 8 γM = 2

Comb.	fd	Sa	σ0	N	M	Mc	Coeff.s.	Verifica
SLV 15	143750	0.31	17593	-10650	208.84	638.16	3.06	Si
SLV 16	143750	0.31	17593	-10650	208.84	638.16	3.06	Si
SLV 11	143750	0.31	21203	-12835	208.84	742.56	3.56	Si
SLV 12	143750	0.31	21203	-12835	208.84	742.56	3.56	Si
SLV 14	143750	0.31	22978	-13910	208.84	790.59	3.79	Si
SLV 13	143750	0.31	22978	-13910	208.84	790.59	3.79	Si
SLV 8	143750	0.31	29682	-17968	208.84	952.25	4.56	Si
SLV 7	143750	0.31	29682	-17968	208.84	952.25	4.56	Si
SLV 9	143750	0.31	39153	-23702	208.84	1127.49	5.4	Si
SLV 10	143750	0.31	39153	-23702	208.84	1127.49	5.4	Si

Verifica dei meccanismi locali di collasso con analisi cinematica lineare

forza di aggancio al piano = 0 quota mezzeria = 3.16 Wa = 0.03 Ta = 0.1615

Comb.	N top	N base	V orto	α0	M*	e*	a0*	aLim	Verifica
SLV 16	-6507	-18480	130	0.008	983.5	0.917	0.13076	14.13539	No
SLV 15	-6507	-18480	130	0.008	983.5	0.917	0.13076	14.13539	No
SLV 12	-4981	-23154	86	0.012	831.5	0.907	0.1956	14.13539	No
SLV 11	-4981	-23154	86	0.012	831.5	0.907	0.1956	14.13539	No
SLV 14	-12434	-18970	109	0.014	1581.7	0.944	0.21715	14.13539	No
SLV 13	-12434	-18970	109	0.014	1581.7	0.944	0.21715	14.13539	No
SLV 2	-27832	-33956	-85	0.017	3147.2	0.97	0.26146	14.13539	No
SLV 1	-27832	-33956	-85	0.017	3147.2	0.97	0.26146	14.13539	No
SLV 3	-21905	-33466	-65	0.018	2543.9	0.963	0.27033	14.13539	No
SLV 4	-21905	-33466	-65	0.018	2543.9	0.963	0.27033	14.13539	No

Tabella dei coefficienti di sicurezza minimi

Stato limite	Coeff.s.	Comb.	Verifica
PF_SLU	1.053	SLU 84	Si
V_SLU	2.775	SLU 5	Si
PF_SLV	0	SLV 11	No
V_SLV	0	SLV 11	No
PFFP_SLV	3.056	SLV 15	Si
R_SLV	0.009	SLV 15	No

Maschio 61

Verifiche condotte secondo D.M. 17-01-18 (N.T.C.)

Dati geometrici

X ini.	Y ini.	X fin.	Y fin.	Quota i.	Quota.s	l	Sp.	h netta	h ini.	h fin.	a	a.s.,sx	a.s.,dx
-16.968	-4.546	-16.968	-4.413	L3	L4	0.133	0.28	3.68	3.68	3.68			

Caratteristiche del materiale

(Circolare 7 21-01-19 C8.5.I) Muratura in mattoni pieni e malta di calce LC2_Corti

fb	fk	fvk0	fmedio	τ0	fv0	μ	ϕ	fv,lim	E	G	FC
600000			345000	9000	20000	0.58	0.77	32500	320000000	128000000	1.2

Verifica a pressoflessione nel piano secondo D.M. 17-01-18 NTC §7.8.2.2.1 in combinazioni non sismiche, γM = 3

Comb.	Quota	N	M	σ0	Mu	c.s.	Verifica
SLU 1	1.32	-1395	28.73	37389	50.29	1.75	Si
SLU 1	4.43	-209	39.65	0	0	0	No, e>l/2
SLU 55	1.32	-3326	127.16	89148	0	0	No, Rottura per schiacciamento
SLU 55	4.43	-179	28.19	0	0	0	No, e>l/2
SLU 53	1.32	-1965	40.81	52661	46.28	1.134	Si
SLU 53	4.43	-295	56.09	0	0	0	No, e>l/2
SLU 60	1.32	-1976	40.39	52962	46.06	1.14	Si
SLU 60	4.43	-300	57.22	0	0	0	No, e>l/2
SLU 56	1.32	-2026	42.93	54311	45	1.048	Si
SLU 56	4.43	-301	56.92	0	0	0	No, e>l/2
SLU 54	1.32	-2776	92.33	74397	16.03	0.174	No, M>Mu
SLU 54	4.43	-226	39.49	0	0	0	No, e>l/2
SLU 57	1.32	-2837	94.45	76047	12.56	0.133	No, M>Mu
SLU 57	4.43	-232	40.31	0	0	0	No, e>l/2
SLU 61	1.32	-2787	91.92	74698	15.41	0.168	No, M>Mu
SLU 61	4.43	-231	40.61	0	0	0	No, e>l/2
SLU 58	1.32	-2036	43.41	54570	44.78	1.032	Si
SLU 58	4.43	-300	56.69	0	0	0	No, e>l/2
SLU 59	1.32	-2847	94.94	76307	12	0.126	No, M>Mu
SLU 59	4.43	-231	40.08	0	0	0	No, e>l/2

Verifica a pressoflessione nel piano secondo D.M. 17-01-18 NTC §7.8.2.2.1 in combinazioni sismiche, γM = 2

Comb.	Quota	N	M	σ0	Mu	c.s.	Verifica
SLV 7	1.32	-12774	685.58	342346	0	0	No, Rottura per schiacciamento
SLV 7	4.43	773	-197.03	0	0	0	No, Trazione
SLV 1	1.32	-1745	-135.56	0	0	0	No, e>l/2
SLV 1	4.43	-229	42.8	0	0	0	No, e>l/2
SLV 2	1.32	-1745	-135.56	0	0	0	No, e>l/2
SLV 2	4.43	-229	42.8	0	0	0	No, e>l/2
SLV 3	1.32	-7919	252.49	212246	0	0	No, Rottura per schiacciamento
SLV 3	4.43	320	-89.07	0	0	0	No, Trazione
SLV 4	1.32	-7919	252.49	212246	0	0	No, Rottura per schiacciamento
SLV 4	4.43	320	-89.07	0	0	0	No, Trazione
SLV 5	1.32	7806	-607.92	0	0	0	No, Trazione
SLV 5	4.43	-1057	242.53	0	0	0	No, e>l/2
SLV 8	1.32	-12774	685.58	342346	0	0	No, Rottura per schiacciamento
SLV 8	4.43	773	-197.03	0	0	0	No, Trazione
SLV 10	1.32	9819	-624.75	0	0	0	No, Trazione
SLV 10	4.43	-1219	281.86	0	0	0	No, e>l/2
SLV 6	1.32	7806	-607.92	0	0	0	No, Trazione
SLV 6	4.43	-1057	242.53	0	0	0	No, e>l/2
SLV 9	1.32	9819	-624.75	0	0	0	No, Trazione
SLV 9	4.43	-1219	281.86	0	0	0	No, e>l/2

Verifica a taglio nel piano secondo D.M. 17-01-18 (N.T.C.) §7.8.2.2.2 con rottura per scorrimento in combinazioni non sismiche, γM = 3

Comb.	Quota	N	V par	M	σ0	σN	l'	fvd	Vt scorr.	Vt fess.diag.	Vt,lim	c.s.	Verifica
SLU 57	1.32	-2837	167	94.45		101318	0.1	10833	303			1.82	Si
SLU 57	4.43	-232	-20	40.31		0	0	5556	0			0	No, Vu<V
SLU 54	1.32	-2776	162	92.33		99042	0.1001	10833	304			1.88	Si
SLU 54	4.43	-226	-18	39.49		0	0	5556	0			0	No, Vu<V
SLU 55	1.32	-3326	256	127.16		139440	0.0852	10833	258			1.01	Si
SLU 55	4.43	-179	-44	28.19		0	0	5556	0			0	No, Vu<V
SLU 60	1.32	-1976	19	40.39		52962	0.1333	10833	404			20.79	Si
SLU 60	4.43	-300	22	57.22		0	0	5556	0			0	No, Vu<V
SLU 58	1.32	-2036	29	43.41		54570	0.1333	10833	404			13.73	Si
SLU 58	4.43	-300	15	56.69		0	0	5556	0			0	No, Vu<V
SLU 61	1.32	-2787	159	91.92		98607	0.1009	10833	306			1.93	Si
SLU 61	4.43	-231	-15	40.61		0	0	5556	0			0	No, Vu<V
SLU 53	1.32	-1965	23	40.81		52661	0.1333	10833	404			17.8	Si
SLU 53	4.43	-295	18	56.09		0	0	5556	0			0	No, Vu<V
SLU 56	1.32	-2026	28	42.93		54311	0.1333	10833	404			14.68	Si
SLU 56	4.43	-301	17	56.92		0	0	5556	0			0	No, Vu<V
SLU 1	1.32	-1395	16	28.73		37389	0.1333	10541	393			24.62	Si
SLU 1	4.43	-209	11	39.65		0	0	5556	0			0	No, Vu<V
SLU 59	1.32	-2847	169	94.94		101834	0.0999	10833	303			1.8	Si
SLU 59	4.43	-231	-21	40.08		0	0	5556	0			0	No, Vu<V

Verifica a taglio nel piano secondo D.M. 17-01-18 (N.T.C.) §7.8.2.2.2 con rottura per scorrimento in combinazioni sismiche, γM = 2

Comb.	Quota	N	V par	M	σ0	σN	l'	fvd	Vt scorr.	Vt fess.diag.	Vt,lim	c.s.	Verifica
SLV 7	1.32	-12774	2571	685.58		1173694	0.0389	16250	177			0.07	No, Vu<V
SLV 7	4.43	773	-496	-197.03		0	0	8333	0			0	No, Vu<V
SLV 3	1.32	-7919	762	252.49		271340	0.1042	16250	474			0.62	No, Vu<V
SLV 3	4.43	320	-278	-89.07		0	0	8333	0			0	No, Vu<V
SLV 6	1.32	7806	-2553	-607.92		0	0	8333	0			0	No, Vu<V
SLV 6	4.43	-1057	434	242.53		0	0	8333	0			0	No, Vu<V
SLV 1	1.32	-1745	-775	-135.56		0	0	8333	0			0	No, Vu<V
SLV 1	4.43	-229	1	42.8		0	0	8333	0			0	No, Vu<V
SLV 2	1.32	-1745	-775	-135.56		0	0	8333	0			0	No, Vu<V
SLV 2	4.43	-229	1	42.8		0	0	8333	0			0	No, Vu<V
SLV 10	1.32	9819	-2539	-624.75		0	0	8333	0			0	No, Vu<V
SLV 10	4.43	-1219	525	281.86		0	0	8333	0			0	No, Vu<V
SLV 5	1.32	7806	-2553	-607.92		0	0	8333	0			0	No, Vu<V
SLV 5	4.43	-1057	434	242.53		0	0	8333	0			0	No, Vu<V

Comb.	Quota	N	V par	M	σ0	σN	l'	fvd	Vt scorr.	Vt fess.diag.	Vt,lim	c.s.	Verifica
SLV 9	1.32	9819	-2539	-624.75		0	0	8333	0			0	No, Vu<V
SLV 9	4.43	-1219	525	281.86		0	0	8333	0			0	No, Vu<V
SLV 4	1.32	-7919	762	252.49		271340	0.1042	16250	474			0.62	No, Vu<V
SLV 4	4.43	320	-278	-89.07		0	0	8333	0			0	No, Vu<V
SLV 8	1.32	-12774	2571	685.58		1173694	0.0389	16250	177			0.07	No, Vu<V
SLV 8	4.43	773	-496	-197.03		0	0	8333	0			0	No, Vu<V

Verifica a pressoflessione fuori piano D.M. 17-01-18 (N.T.C.)

quota 3.16 Wa 0.05 denominatore 8 γM = 2

Comb.	fd	Sa	σ0	N	M	Mc	Coeff.s.	Verifica
SLV 8	143750	0.31	0	1665	11.75	0	0	No, Trazione
SLV 11	143750	0.31	0	2393	11.75	0	0	No, Trazione
SLV 15	143750	0.31	0	497	11.75	0	0	No, Trazione
SLV 16	143750	0.31	0	497	11.75	0	0	No, Trazione
SLV 9	143750	0.31	146112	-5452	11.75	0	0	No, Rottura per schiacciamento
SLV 5	143750	0.31	165630	-6180	11.75	0	0	No, Rottura per schiacciamento
SLV 6	143750	0.31	165630	-6180	11.75	0	0	No, Rottura per schiacciamento
SLV 12	143750	0.31	0	2393	11.75	0	0	No, Trazione
SLV 7	143750	0.31	0	1665	11.75	0	0	No, Trazione
SLV 10	143750	0.31	146112	-5452	11.75	0	0	No, Rottura per schiacciamento

Verifica dei meccanismi locali di collasso con analisi cinematica lineare

forza di aggancio al piano = 0 quota mezzeria = 3.16 Wa = 0.05 Ta = 0.0808

Comb.	N top	N base	V orto	α0	M*	e*	a0*	aLim	Verifica
SLV 16	103	-1209	-12	0	0	0	0	8.50261	No, Trazione
SLV 14	506	4965	-1	0	0	0	0	8.50261	No, Trazione
SLV 13	506	4965	-1	0	0	0	0	8.50261	No, Trazione
SLV 9	422	9819	18	0	0	0	0	7.42296	No, Trazione
SLV 15	103	-1209	-12	0	0	0	0	8.50261	No, Trazione
SLV 6	-55	7806	21	0	0	0	0	7.42296	No, Trazione
SLV 10	422	9819	18	0	0	0	0	7.42296	No, Trazione
SLV 5	-55	7806	21	0	0	0	0	7.42296	No, Trazione
SLV 11	-924	-10760	-22	0.021	113.4	0.951	0.32741	7.42296	No
SLV 12	-924	-10760	-22	0.021	113.4	0.951	0.32741	7.42296	No

Tabella dei coefficienti di sicurezza minimi

Stato limite	Coeff.s.	Comb.	Verifica
PF_SLU	0	SLU 1	No
V_SLU	0	SLU 1	No
PF_SLV	0	SLV 14	No
V_SLV	0	SLV 1	No
PFFP_SLV	0	SLV 16	No
R_SLV	0	SLV 16	No

Maschio 62

Verifiche condotte secondo D.M. 17-01-18 (N.T.C.)

Dati geometrici

X ini.	Y ini.	X fin.	Y fin.	Quota i.	Quota.s	l	Sp.	h netta	h ini.	h fin.	a	a.s.,sx	a.s.,dx
-13.727	-3.183	-15.287	-3.183	L3	L4	1.56	0.28	3.68	3.68	3.68			

Caratteristiche del materiale

(Circolare 7 21-01-19 C8.5.I) Muratura in mattoni pieni e malta di calce LC2_Corti

fb	fk	fvk0	fmedio	τ0	fv0	μ	ϕ	fv,lim	E	G	FC
600000			345000	9000	20000	0.58	0.77	32500	320000000	128000000	1.2

Verifica a pressoflessione nel piano secondo D.M. 17-01-18 NTC §7.8.2.2.1 in combinazioni non sismiche, γM = 3

Comb.	Quota	N	M	σ0	Mu	c.s.	Verifica
SLU 74	1.32	-11570	-4843.53	26483	6091.5	1.258	Si
SLU 74	3.42	-18597	-795.05	42568	6926.49	8.712	Si
SLU 78	1.32	-11671	-4889.48	26715	6118.98	1.251	Si
SLU 78	3.42	-18785	-789.21	42998	6919.1	8.767	Si
SLU 77	1.32	-11695	-4891.79	26769	6125.27	1.252	Si
SLU 77	3.42	-18796	-817.88	43024	6918.62	8.459	Si
SLU 82	1.32	-11794	-4971.2	26996	6151.6	1.237	Si
SLU 82	3.42	-19115	-715.17	43754	6902.36	9.651	Si
SLU 75	1.32	-11546	-4841.23	26429	6085.08	1.257	Si
SLU 75	3.42	-18586	-766.39	42543	6926.88	9.038	Si
SLU 80	1.32	-11599	-4859.43	26551	6099.58	1.255	Si
SLU 80	3.42	-18652	-793.93	42695	6924.48	8.722	Si
SLU 79	1.32	-11623	-4861.73	26605	6105.94	1.256	Si
SLU 79	3.42	-18663	-822.6	42720	6924.06	8.417	Si
SLU 84	1.32	-11919	-5019.46	27283	6184.14	1.232	Si
SLU 84	3.42	-19314	-738	44210	6889.96	9.336	Si
SLU 81	1.32	-11818	-4973.5	27050	6157.76	1.238	Si
SLU 81	3.42	-19126	-743.84	43779	6901.72	9.278	Si
SLU 83	1.32	-11943	-5021.76	27336	6190.17	1.233	Si
SLU 83	3.42	-19325	-766.67	44235	6889.22	8.986	Si

Verifica a pressoflessione nel piano secondo D.M. 17-01-18 NTC §7.8.2.2.1 in combinazioni sismiche, γM = 2

Comb.	Quota	N	M	σ0	Mu	c.s.	Verifica

Comb.	Quota	N	M	σ0	Mu	c.s.	Verifica
SLV 16	1.32	-7493	-5928.01	0	0	0	No, e>l/2
SLV 16	3.42	-17814	3114.77	40777	9259.59	2.973	Si
SLV 7	1.32	-4815	-2440.01	11022	3417.69	1.401	Si
SLV 7	3.42	-3689	-3878.4	0	0	0	No, e>l/2
SLV 4	1.32	-6738	-677.79	15424	4593.17	6.777	Si
SLV 4	3.42	-3467	-5563.43	0	0	0	No, e>l/2
SLV 11	1.32	-5042	-4015.07	0	0	0	No, e>l/2
SLV 11	3.42	-7993	-1274.95	18296	5301.91	4.159	Si
SLV 15	1.32	-7493	-5928.01	0	0	0	No, e>l/2
SLV 15	3.42	-17814	3114.77	40777	9259.59	2.973	Si
SLV 3	1.32	-6738	-677.79	15424	4593.17	6.777	Si
SLV 3	3.42	-3467	-5563.43	0	0	0	No, e>l/2
SLV 14	1.32	-9368	-5992.61	21443	6025.76	1.006	Si
SLV 14	3.42	-21928	4273.92	50194	10079.58	2.358	Si
SLV 8	1.32	-4815	-2440.01	11022	3417.69	1.401	Si
SLV 8	3.42	-3689	-3878.4	0	0	0	No, e>l/2
SLV 13	1.32	-9368	-5992.61	21443	6025.76	1.006	Si
SLV 13	3.42	-21928	4273.92	50194	10079.58	2.358	Si
SLV 12	1.32	-5042	-4015.07	0	0	0	No, e>l/2
SLV 12	3.42	-7993	-1274.95	18296	5301.91	4.159	Si

Verifica a taglio nel piano secondo D.M. 17-01-18 (N.T.C.) §7.8.2.2.2 con rottura per scorrimento in combinazioni non sismiche, γM = 3

Comb.	Quota	N	V par	M	σ0	σN	l'	fvd	Vt scorr.	Vt fess.diag.	Vt,lim	c.s.	Verifica
SLU 84	1.32	-11919	-6381	-5019.46		39524	1.077	10825	3265			0.51	No, Vu<V
SLU 84	3.42	-19314	-5025	-738		44210	1.5603	10833	4733			0.94	No, Vu<V
SLU 74	1.32	-11570	-6150	-4843.53		38102	1.0845	10636	3230			0.53	No, Vu<V
SLU 74	3.42	-18597	-4817	-795.05		42568	1.5603	10833	4733			0.98	No, Vu<V
SLU 76	1.32	-11459	-6128	-4809.64		37851	1.0812	10602	3210			0.52	No, Vu<V
SLU 76	3.42	-18446	-4827	-751.99		42223	1.5603	10833	4733			0.98	No, Vu<V
SLU 82	1.32	-11794	-6328	-4971.2		39150	1.0759	10776	3246			0.51	No, Vu<V
SLU 82	3.42	-19115	-4997	-715.17		43754	1.5603	10833	4733			0.95	No, Vu<V
SLU 77	1.32	-11695	-6202	-4891.79		38476	1.0855	10686	3248			0.52	No, Vu<V
SLU 77	3.42	-18796	-4845	-817.88		43024	1.5603	10833	4733			0.98	No, Vu<V
SLU 80	1.32	-11599	-6171	-4859.43		38231	1.0836	10653	3232			0.52	No, Vu<V
SLU 80	3.42	-18652	-4835	-793.93		42695	1.5603	10833	4733			0.98	No, Vu<V
SLU 81	1.32	-11818	-6314	-4973.5		39158	1.0778	10777	3252			0.52	No, Vu<V
SLU 81	3.42	-19126	-4968	-743.84		43779	1.5603	10833	4733			0.95	No, Vu<V
SLU 75	1.32	-11546	-6164	-4841.23		38093	1.0825	10635	3223			0.52	No, Vu<V
SLU 75	3.42	-18586	-4847	-766.39		42543	1.5603	10833	4733			0.98	No, Vu<V
SLU 78	1.32	-11671	-6216	-4889.48		38467	1.0836	10685	3242			0.52	No, Vu<V
SLU 78	3.42	-18785	-4875	-789.21		42998	1.5603	10833	4733			0.97	No, Vu<V
SLU 83	1.32	-11943	-6367	-5021.76		39532	1.0789	10827	3271			0.51	No, Vu<V
SLU 83	3.42	-19325	-4995	-766.67		44235	1.5603	10833	4733			0.95	No, Vu<V

Verifica a taglio nel piano secondo D.M. 17-01-18 (N.T.C.) §7.8.2.2.2 con rottura per scorrimento in combinazioni sismiche, γM = 2

Comb.	Quota	N	V par	M	σ0	σN	l'	fvd	Vt scorr.	Vt fess.diag.	Vt,lim	c.s.	Verifica
SLV 11	1.32	-5042	-3997	-4015.07		0	0	8333	0			0	No, Vu<V
SLV 11	3.42	-7993	-2418	-1274.95		18296	1.5603	11993	5239			2.17	Si
SLV 16	1.32	-7493	-10506	-5928.01		0	0	8333	0			0	No, Vu<V
SLV 16	3.42	-17814	-7909	3114.77		40777	1.5603	16250	7099			0.9	No, Vu<V
SLV 7	1.32	-4815	190	-2440.01		20967	0.8202	12527	2877			15.17	Si
SLV 7	3.42	-3689	798	-3878.4		0	0	8333	0			0	No, Vu<V
SLV 12	1.32	-5042	-3997	-4015.07		0	0	8333	0			0	No, Vu<V
SLV 12	3.42	-7993	-2418	-1274.95		18296	1.5603	11993	5239			2.17	Si
SLV 15	1.32	-7493	-10506	-5928.01		0	0	8333	0			0	No, Vu<V
SLV 15	3.42	-17814	-7909	3114.77		40777	1.5603	16250	7099			0.9	No, Vu<V
SLV 3	1.32	-6738	3449	-677.79		15424	1.5603	11418	4988			1.45	Si
SLV 3	3.42	-3467	2811	-5563.43		0	0	8333	0			0	No, Vu<V
SLV 13	1.32	-9368	-11899	-5992.61		79406	0.4213	16250	1917			0.16	No, Vu<V
SLV 13	3.42	-21928	-9400	4273.92		50194	1.5603	16250	7099			0.76	No, Vu<V
SLV 4	1.32	-6738	3449	-677.79		15424	1.5603	11418	4988			1.45	Si
SLV 4	3.42	-3467	2811	-5563.43		0	0	8333	0			0	No, Vu<V
SLV 14	1.32	-9368	-11899	-5992.61		79406	0.4213	16250	1917			0.16	No, Vu<V
SLV 14	3.42	-21928	-9400	4273.92		50194	1.5603	16250	7099			0.76	No, Vu<V
SLV 8	1.32	-4815	190	-2440.01		20967	0.8202	12527	2877			15.17	Si
SLV 8	3.42	-3689	798	-3878.4		0	0	8333	0			0	No, Vu<V

Verifica a pressoflessione fuori piano D.M. 17-01-18 (N.T.C.)

quota 3.16 Wa 0.05 denominatore 8 γM = 2

Comb.	fd	Sa	σ0	N	M	Mc	Coeff.s.	Verifica
SLV 7	143750	0.31	7727	-3376	140.88	442.72	3.14	Si
SLV 8	143750	0.31	7727	-3376	140.88	442.72	3.14	Si
SLV 4	143750	0.31	8640	-3774	140.88	491.05	3.49	Si
SLV 3	143750	0.31	8640	-3774	140.88	491.05	3.49	Si
SLV 11	143750	0.31	16148	-7055	140.88	857.13	6.08	Si
SLV 12	143750	0.31	16148	-7055	140.88	857.13	6.08	Si
SLV 2	143750	0.31	17842	-7795	140.88	931.93	6.61	Si
SLV 1	143750	0.31	17842	-7795	140.88	931.93	6.61	Si
SLV 16	143750	0.31	36709	-16037	140.88	1570.68	11.15	Si
SLV 15	143750	0.31	36709	-16037	140.88	1570.68	11.15	Si

Verifica dei meccanismi locali di collasso con analisi cinematica lineare

forza di aggancio al piano = 0 quota mezzeria = 3.16 Wa = 0.05 Ta = 0.0808

Comb.	N top	N base	V orto	α0	M*	e*	a0*	aLim	Verifica
SLV 11	-6531	-5042	-166	0.024	894.3	0.931	0.37676	7.42296	No
SLV 12	-6531	-5042	-166	0.024	894.3	0.931	0.37676	7.42296	No
SLV 7	-7296	-4815	-138	0.029	971.7	0.935	0.44451	7.42296	No
SLV 8	-7296	-4815	-138	0.029	971.7	0.935	0.44451	7.42296	No
SLV 15	-8656	-7493	-91	0.034	1109.3	0.942	0.5312	8.50261	No

Comb.	N top	N base	V orto	α0	M*	e*	a0*	aLim	Verifica
SLV 16	-8656	-7493	-91	0.034	1109.3	0.942	0.5312	8.50261	No
SLV 1	-13797	-8613	96	0.035	1631.3	0.959	0.53604	8.50261	No
SLV 2	-13797	-8613	96	0.035	1631.3	0.959	0.53604	8.50261	No
SLV 5	-15922	-11065	170	0.031	1847.5	0.963	0.47377	7.42296	No
SLV 6	-15922	-11065	170	0.031	1847.5	0.963	0.47377	7.42296	No

Tabella dei coefficienti di sicurezza minimi

Stato limite	Coeff.s.	Comb.	Verifica
PF_SLU	1.232	SLU 84	Si
V_SLU	0.512	SLU 84	No
PF_SLV	0	SLV 3	No
V_SLV	0	SLV 3	No
PFFP_SLV	3.142	SLV 7	Si
R_SLV	0.051	SLV 11	No

Maschio 63

Verifiche condotte secondo D.M. 17-01-18 (N.T.C.)

Dati geometrici

X ini.	Y ini.	X fin.	Y fin.	Quota i.	Quota.s	l	Sp.	h netta	h ini.	h fin.	a	a.s.,sx	a.s.,dx
-16.968	-4.696	-16.697	-4.696	L3	L4	0.271	0.3	3.68	3.68	3.68			

Caratteristiche del materiale

(Circolare 7 21-01-19 C8.5.I) Muratura in mattoni pieni e malta di calce LC2_Corti

fb	fk	fvk0	fmedio	τ0	fv0	μ	ϕ	fv,lim	E	G	FC
600000			345000	9000	20000	0.58	0.77	32500	320000000	128000000	1.2

Verifica a pressoflessione nel piano secondo D.M. 17-01-18 NTC §7.8.2.2.1 in combinazioni non sismiche, γM = 3

Comb.	Quota	N	M	σ0	Mu	c.s.	Verifica
SLU 74	1.32	-6771	-31.15	83213	0	0	No, Rottura per schiacciamento
SLU 74	4.43	-3477	-120.24	42736	224.17	1.864	Si
SLU 79	1.32	-6853	-25.3	84227	0	0	No, Rottura per schiacciamento
SLU 79	4.43	-3575	-130.32	43932	223.32	1.714	Si
SLU 83	1.32	-6980	-34.25	85787	0	0	No, Rottura per schiacciamento
SLU 83	4.43	-3599	-122.97	44237	223.04	1.814	Si
SLU 62	1.32	-6516	-29.08	80080	14.95	0.514	No, M>Mu
SLU 62	4.43	-3349	-116.4	41160	224.69	1.93	Si
SLU 68	1.32	-4842	-40.12	59510	176.93	4.41	Si
SLU 68	4.43	-3900	-170.84	47927	217.69	1.274	Si
SLU 76	1.32	-5359	-50.42	65859	139.17	2.76	Si
SLU 76	4.43	-4168	-173.5	51222	209.8	1.209	Si
SLU 60	1.32	-6421	-33.62	78919	27.14	0.807	No, M>Mu
SLU 60	4.43	-3259	-107.9	40053	224.65	2.082	Si
SLU 77	1.32	-6865	-26.61	84374	0	0	No, Rottura per schiacciamento
SLU 77	4.43	-3567	-128.73	43842	223.4	1.735	Si
SLU 73	1.32	-5264	-54.96	64698	146.89	2.673	Si
SLU 73	4.43	-4078	-165	50115	212.78	1.29	Si
SLU 81	1.32	-6886	-38.79	84626	0	0	No, Rottura per schiacciamento
SLU 81	4.43	-3509	-114.47	43131	223.93	1.956	Si

Verifica a pressoflessione nel piano secondo D.M. 17-01-18 NTC §7.8.2.2.1 in combinazioni sismiche, γM = 2

Comb.	Quota	N	M	σ0	Mu	c.s.	Verifica
SLV 6	1.32	-15307	-277.85	188124	0	0	No, Rottura per schiacciamento
SLV 6	4.43	2708	430.12	0	0	0	No, Trazione
SLV 10	1.32	-15111	165.49	185720	0	0	No, Rottura per schiacciamento
SLV 10	4.43	2919	254.65	0	0	0	No, Trazione
SLV 3	1.32	-1970	-748.47	0	0	0	No, e>l/2
SLV 3	4.43	-4350	79.95	53457	331.8	4.15	Si
SLV 8	1.32	5562	-206.14	0	0	0	No, Trazione
SLV 8	4.43	-7772	-423.55	95517	230.05	0.543	No, M>Mu
SLV 9	1.32	-15111	165.49	185720	0	0	No, Rottura per schiacciamento
SLV 9	4.43	2919	254.65	0	0	0	No, Trazione
SLV 5	1.32	-15307	-277.85	188124	0	0	No, Rottura per schiacciamento
SLV 5	4.43	2708	430.12	0	0	0	No, Trazione
SLV 7	1.32	5562	-206.14	0	0	0	No, Trazione
SLV 7	4.43	-7772	-423.55	95517	230.05	0.543	No, M>Mu
SLV 2	1.32	-8231	-769.98	101159	192.1	0.249	No, M>Mu
SLV 2	4.43	-1206	336.05	0	0	0	No, e>l/2
SLV 4	1.32	-1970	-748.47	0	0	0	No, e>l/2
SLV 4	4.43	-4350	79.95	53457	331.8	4.15	Si
SLV 1	1.32	-8231	-769.98	101159	192.1	0.249	No, M>Mu
SLV 1	4.43	-1206	336.05	0	0	0	No, e>l/2

Verifica a taglio nel piano secondo D.M. 17-01-18 (N.T.C.) §7.8.2.2.2 con rottura per scorrimento in combinazioni non sismiche, γM = 3

Comb.	Quota	N	V par	M	σ0	σN	l'	fvd	Vt scorr.	Vt fess.diag.	Vt,lim	c.s.	Verifica
SLU 10	1.32	-3611	-149	-46.79		44377	0.2712	10833	881			5.9	Si
SLU 10	4.43	-3230	96	-136.14		39692	0.2712	10833	881			9.21	Si

Comb.	Quota	N	V par	M	σ0	σN	l'	fvd	Vt scorr.	Vt fess.diag.	Vt,lim	c.s.	Verifica
SLU 65	1.32	-4748	-146	-44.66		58349	0.2712	10833	881			6.03	Si
SLU 65	4.43	-3810	91	-162.34		46821	0.2712	10833	881			9.72	Si
SLU 52	1.32	-4800	-151	-49.79		58991	0.2712	10833	881			5.85	Si
SLU 52	4.43	-3827	96	-158.43		47038	0.2712	10833	881			9.22	Si
SLU 13	1.32	-3705	-147	-42.25		45538	0.2712	10833	881			6	Si
SLU 13	4.43	-3320	91	-144.64		40799	0.2712	10833	881			9.68	Si
SLU 73	1.32	-5264	-154	-54.96		64698	0.2712	10833	881			5.74	Si
SLU 73	4.43	-4078	83	-165		50115	0.2712	10833	881			10.59	Si
SLU 34	1.32	-4170	-150	-47.42		51245	0.2712	10833	881			5.88	Si
SLU 34	4.43	-3570	79	-151.21		43876	0.2712	10833	881			11.2	Si
SLU 31	1.32	-4075	-152	-51.96		50084	0.2712	10833	881			5.78	Si
SLU 31	4.43	-3480	83	-142.71		42770	0.2712	10833	881			10.58	Si
SLU 76	1.32	-5359	-151	-50.42		65859	0.2712	10833	881			5.83	Si
SLU 76	4.43	-4168	79	-173.5		51222	0.2712	10833	881			11.21	Si
SLU 23	1.32	-3559	-145	-41.66		43735	0.2712	10833	881			6.08	Si
SLU 23	4.43	-3212	91	-140.05		39476	0.2712	10819	880			9.7	Si
SLU 55	1.32	-4894	-148	-45.25		60152	0.2712	10833	881			5.95	Si
SLU 55	4.43	-3917	91	-166.93		48144	0.2712	10833	881			9.69	Si

Verifica a taglio nel piano secondo D.M. 17-01-18 (N.T.C.) §7.8.2.2.2 con rottura per scorrimento in combinazioni sismiche, γM = 2

Comb.	Quota	N	V par	M	σ0	σN	l'	fvd	Vt scorr.	Vt fess.diag.	Vt,lim	c.s.	Verifica
SLV 7	1.32	5562	-876	-206.14		0	0	8333	0			0	No, Vu<V
SLV 7	4.43	-7772	957	-423.55		106460	0.2433	16250	1186			1.24	Si
SLV 6	1.32	-15307	897	-277.85		188124	0.2712	16250	1322			1.47	Si
SLV 6	4.43	2708	-458	430.12		0	0	8333	0			0	No, Vu<V
SLV 8	1.32	5562	-876	-206.14		0	0	8333	0			0	No, Vu<V
SLV 8	4.43	-7772	957	-423.55		106460	0.2433	16250	1186			1.24	Si
SLV 2	1.32	-8231	327	-769.98		217410	0.1262	16250	615			1.88	Si
SLV 2	4.43	-1206	666	336.05		0	0	8333	0			0	No, Vu<V
SLV 9	1.32	-15111	854	165.49		185720	0.2712	16250	1322			1.55	Si
SLV 9	4.43	2919	-997	254.65		0	0	8333	0			0	No, Vu<V
SLV 5	1.32	-15307	897	-277.85		188124	0.2712	16250	1322			1.47	Si
SLV 5	4.43	2708	-458	430.12		0	0	8333	0			0	No, Vu<V
SLV 1	1.32	-8231	327	-769.98		217410	0.1262	16250	615			1.88	Si
SLV 1	4.43	-1206	666	336.05		0	0	8333	0			0	No, Vu<V
SLV 4	1.32	-1970	-205	-748.47		0	0	8333	0			0	No, Vu<V
SLV 4	4.43	-4350	1091	79.95		53457	0.2712	16250	1322			1.21	Si
SLV 3	1.32	-1970	-205	-748.47		0	0	8333	0			0	No, Vu<V
SLV 3	4.43	-4350	1091	79.95		53457	0.2712	16250	1322			1.21	Si
SLV 10	1.32	-15111	854	165.49		185720	0.2712	16250	1322			1.55	Si
SLV 10	4.43	2919	-997	254.65		0	0	8333	0			0	No, Vu<V

Verifica a pressoflessione fuori piano D.M. 17-01-18 (N.T.C.)

quota 3.16 Wa 0.05 denominatore 8 γM = 2

Comb.	fd	Sa	σ0	N	M	Mc	Coeff.s.	Verifica
SLV 13	143750	0.31	9435	-768	26.2	106.26	4.06	Si
SLV 14	143750	0.31	9435	-768	26.2	106.26	4.06	Si
SLV 15	143750	0.31	14441	-1175	26.2	155.43	5.93	Si
SLV 16	143750	0.31	14441	-1175	26.2	155.43	5.93	Si
SLV 10	143750	0.31	29605	-2409	26.2	273.78	10.45	Si
SLV 9	143750	0.31	29605	-2409	26.2	273.78	10.45	Si
SLV 3	143750	0.31	88760	-7222	26.2	296.37	11.31	Si
SLV 4	143750	0.31	88760	-7222	26.2	296.37	11.31	Si
SLV 1	143750	0.31	83754	-6815	26.2	321.54	12.27	Si
SLV 2	143750	0.31	83754	-6815	26.2	321.54	12.27	Si

Verifica dei meccanismi locali di collasso con analisi cinematica lineare

forza di aggancio al piano = 0 quota mezzeria = 3.16 Wa = 0.05 Ta = 0.0754

Comb.	N top	N base	V orto	α0	M*	e*	a0*	aLim	Verifica
SLV 12	-820	5758	30	0	0	0	0	6.92171	No, Trazione
SLV 7	-713	5562	34	0	0	0	0	6.92171	No, Trazione
SLV 8	-713	5562	34	0	0	0	0	6.92171	No, Trazione
SLV 11	-820	5758	30	0	0	0	0	6.92171	No, Trazione
SLV 10	-677	-15111	-34	0.016	112.5	0.908	0.25988	6.92171	No
SLV 9	-677	-15111	-34	0.016	112.5	0.908	0.25988	6.92171	No
SLV 5	-571	-15307	-30	0.018	102	0.902	0.29618	6.92171	No
SLV 6	-571	-15307	-30	0.018	102	0.902	0.29618	6.92171	No
SLV 3	-539	-1970	17	0.033	98.9	0.9	0.53768	7.86415	No
SLV 4	-539	-1970	17	0.033	98.9	0.9	0.53768	7.86415	No

Tabella dei coefficienti di sicurezza minimi

Stato limite	Coeff.s.	Comb.	Verifica
PF_SLU	0	SLU 74	No
V_SLU	5.737	SLU 73	Si
PF_SLV	0	SLV 12	No
V_SLV	0	SLV 1	No
PFFP_SLV	4.056	SLV 13	Si
R_SLV	0	SLV 12	No

Maschio 64

Verifiche condotte secondo D.M. 17-01-18 (N.T.C.)

Dati geometrici

X ini.	Y ini.	X fin.	Y fin.	Quota i.	Quota.s	l	Sp.	h netta	h ini.	h fin.	a	a.s.,sx	a.s.,dx
-14.857	-4.696	-13.727	-4.696	L3	L4	1.129	0.3	3.68	3.68	3.68			

Caratteristiche del materiale

(Circolare 7 21-01-19 C8.5.I) Muratura in mattoni pieni e malta di calce LC2_Corti

fb	fk	fvk0	fmedio	τ0	fv0	μ	ϕ	fv,lim	E	G	FC
600000			345000	9000	20000	0.58	0.77	32500	320000000	128000000	1.2

Verifica a pressoflessione nel piano secondo D.M. 17-01-18 NTC §7.8.2.2.1 in combinazioni non sismiche, γM = 3

Comb.	Quota	N	M	σ0	Mu	c.s.	Verifica
SLU 79	1.32	-21447	-621.15	63298	2700.08	4.347	Si
SLU 79	4.43	-13622	404.92	40203	3895.83	9.621	Si
SLU 77	1.32	-21514	-627.2	63497	2678.87	4.271	Si
SLU 77	4.43	-13666	407.34	40332	3896.11	9.565	Si
SLU 83	1.32	-22020	-656.87	64990	2513.98	3.827	Si
SLU 83	4.43	-13961	409.46	41204	3895.95	9.515	Si
SLU 53	1.32	-20151	-598.92	59472	3071.34	5.128	Si
SLU 53	4.43	-12646	389.81	37323	3869.23	9.926	Si
SLU 81	1.32	-21895	-665.94	64620	2555.78	3.838	Si
SLU 81	4.43	-13827	405.99	40810	3896.47	9.598	Si
SLU 74	1.32	-21389	-636.27	63128	2718.08	4.272	Si
SLU 74	4.43	-13532	403.86	39938	3895.01	9.644	Si
SLU 62	1.32	-20781	-619.52	61334	2899.23	4.68	Si
SLU 62	4.43	-13075	395.42	38589	3885.72	9.827	Si
SLU 82	1.32	-21433	-586.21	63256	2704.47	4.614	Si
SLU 82	4.43	-13660	416.15	40315	3896.08	9.362	Si
SLU 84	1.32	-21558	-577.14	63626	2665.04	4.618	Si
SLU 84	4.43	-13793	419.63	40709	3896.48	9.286	Si
SLU 60	1.32	-20656	-628.59	60965	2934.68	4.669	Si
SLU 60	4.43	-12941	391.94	38195	3881.39	9.903	Si

Verifica a pressoflessione nel piano secondo D.M. 17-01-18 NTC §7.8.2.2.1 in combinazioni sismiche, γM = 2

Comb.	Quota	N	M	σ0	Mu	c.s.	Verifica
SLV 1	1.32	-29913	-4802.5	88284	4687	0.976	No, M>Mu
SLV 1	4.43	-15113	395.66	44606	5419.01	13.696	Si
SLV 16	1.32	-577	3895.54	0	0	0	No, e>l/2
SLV 16	4.43	-3976	192.32	11734	2029.61	10.553	Si
SLV 13	1.32	-9037	3493.53	26673	3989.44	1.142	Si
SLV 13	4.43	-7928	348.34	23399	3619.68	10.391	Si
SLV 11	1.32	1988	1460.94	0	0	0	No, Trazione
SLV 11	4.43	-1880	26.85	5549	1013.44	37.748	Si
SLV 14	1.32	-9037	3493.53	26673	3989.44	1.142	Si
SLV 14	4.43	-7928	348.34	23399	3619.68	10.391	Si
SLV 4	1.32	-21452	-4400.49	63313	5837.01	1.326	Si
SLV 4	4.43	-11161	239.63	32941	4603.63	19.211	Si
SLV 15	1.32	-577	3895.54	0	0	0	No, e>l/2
SLV 15	4.43	-3976	192.32	11734	2029.61	10.553	Si
SLV 2	1.32	-29913	-4802.5	88284	4687	0.976	No, M>Mu
SLV 2	4.43	-15113	395.66	44606	5419.01	13.696	Si
SLV 3	1.32	-21452	-4400.49	63313	5837.01	1.326	Si
SLV 3	4.43	-11161	239.63	32941	4603.63	19.211	Si
SLV 12	1.32	1988	1460.94	0	0	0	No, Trazione
SLV 12	4.43	-1880	26.85	5549	1013.44	37.748	Si

Verifica a taglio nel piano secondo D.M. 17-01-18 (N.T.C.) §7.8.2.2.2 con rottura per scorrimento in combinazioni non sismiche, γM = 3

Comb.	Quota	N	V par	M	σ0	σN	l'	fvd	Vt scorr.	Vt fess.diag.	Vt,lim	c.s.	Verifica
SLU 82	1.32	-21433	-2020	-586.21		63256	1.1294	10833	3671			1.82	Si
SLU 82	4.43	-13660	-175	416.15		40315	1.1294	10833	3671			21.01	Si
SLU 77	1.32	-21514	-1971	-627.2		63497	1.1294	10833	3671			1.86	Si
SLU 77	4.43	-13666	-235	407.34		40332	1.1294	10833	3671			15.6	Si
SLU 84	1.32	-21558	-2007	-577.14		63626	1.1294	10833	3671			1.83	Si
SLU 84	4.43	-13793	-180	419.63		40709	1.1294	10833	3671			20.36	Si
SLU 74	1.32	-21389	-1983	-636.27		63128	1.1294	10833	3671			1.85	Si
SLU 74	4.43	-13532	-230	403.86		39938	1.1294	10833	3671			15.98	Si
SLU 83	1.32	-22020	-2050	-656.87		64990	1.1294	10833	3671			1.79	Si
SLU 83	4.43	-13961	-234	409.46		41204	1.1294	10833	3671			15.69	Si
SLU 75	1.32	-20927	-1941	-556.54		61764	1.1294	10833	3671			1.89	Si
SLU 75	4.43	-13364	-176	414.03		39443	1.1294	10815	3664			20.82	Si
SLU 81	1.32	-21895	-2062	-665.94		64620	1.1294	10833	3671			1.78	Si
SLU 81	4.43	-13827	-228	405.99		40810	1.1294	10833	3671			16.07	Si
SLU 62	1.32	-20781	-1940	-619.52		61334	1.1294	10833	3671			1.89	Si
SLU 62	4.43	-13075	-237	395.42		38589	1.1294	10701	3626			15.3	Si
SLU 60	1.32	-20656	-1953	-628.59		60965	1.1294	10833	3671			1.88	Si
SLU 60	4.43	-12941	-231	391.94		38195	1.1294	10648	3608			15.59	Si
SLU 79	1.32	-21447	-1959	-621.15		63298	1.1294	10833	3671			1.87	Si
SLU 79	4.43	-13622	-236	404.92		40203	1.1294	10833	3671			15.53	Si

Verifica a taglio nel piano secondo D.M. 17-01-18 (N.T.C.) §7.8.2.2.2 con rottura per scorrimento in combinazioni sismiche, γM = 2

Comb.	Quota	N	V par	M	σ0	σN	l'	fvd	Vt scorr.	Vt fess.diag.	Vt,lim	c.s.	Verifica
SLV 3	1.32	-21452	-7060	-4400.49		66288	1.0787	16250	5259			0.74	No, Vu<V
SLV 3	4.43	-11161	-394	239.63		32941	1.1294	14922	5056			12.83	Si
SLV 2	1.32	-29913	-8371	-4802.5		88284	1.1294	16250	5506			0.66	No, Vu<V
SLV 2	4.43	-15113	-858	395.66		44606	1.1294	16250	5506			6.42	Si
SLV 1	1.32	-29913	-8371	-4802.5		88284	1.1294	16250	5506			0.66	No, Vu<V
SLV 1	4.43	-15113	-858	395.66		44606	1.1294	16250	5506			6.42	Si
SLV 12	1.32	1988	2662	1460.94		0	0	8333	0			0	No, Vu<V
SLV 12	4.43	-1880	739	26.85		5549	1.1294	9443	3200			4.33	Si
SLV 14	1.32	-9037	4235	3493.53		56368	0.5344	16250	2605			0.62	No, Vu<V
SLV 14	4.43	-7928	53	348.34		23399	1.1294	13013	4409			82.69	Si
SLV 15	1.32	-577	5545	3895.54		0	0	8333	0			0	No, Vu<V
SLV 15	4.43	-3976	517	192.32		11734	1.1294	10680	3619			7	Si
SLV 11	1.32	1988	2662	1460.94		0	0	8333	0			0	No, Vu<V

Comb.	Quota	N	V par	M	σ0	σN	l'	fvd	Vt scorr.	Vt fess.diag.	Vt,lim	c.s.	Verifica
SLV 11	4.43	-1880	739	26.85		5549	1.1294	9443	3200			4.33	Si
SLV 13	1.32	-9037	4235	3493.53		56368	0.5344	16250	2605			0.62	No, Vu<V
SLV 13	4.43	-7928	53	348.34		23399	1.1294	13013	4409			82.69	Si
SLV 4	1.32	-21452	-7060	-4400.49		66288	1.0787	16250	5259			0.74	No, Vu<V
SLV 4	4.43	-11161	-394	239.63		32941	1.1294	14922	5056			12.83	Si
SLV 16	1.32	-577	5545	3895.54		0	0	8333	0			0	No, Vu<V
SLV 16	4.43	-3976	517	192.32		11734	1.1294	10680	3619			7	Si

Verifica a pressoflessione fuori piano D.M. 17-01-18 (N.T.C.)

quota 3.16 Wa 0.05 denominatore 8 γM = 2

Comb.	fd	Sa	σ0	N	M	Mc	Coeff.s.	Verifica
SLV 12	143750	0.31	4303	-1458	109.09	210.97	1.93	Si
SLV 11	143750	0.31	4303	-1458	109.09	210.97	1.93	Si
SLV 8	143750	0.31	10304	-3491	109.09	479.51	4.4	Si
SLV 7	143750	0.31	10304	-3491	109.09	479.51	4.4	Si
SLV 15	143750	0.31	16942	-5740	109.09	741.65	6.8	Si
SLV 16	143750	0.31	16942	-5740	109.09	741.65	6.8	Si
SLV 14	143750	0.31	33776	-11444	109.09	1242.1	11.39	Si
SLV 13	143750	0.31	33776	-11444	109.09	1242.1	11.39	Si
SLV 3	143750	0.31	36945	-12518	109.09	1309.94	12.01	Si
SLV 4	143750	0.31	36945	-12518	109.09	1309.94	12.01	Si

Verifica dei meccanismi locali di collasso con analisi cinematica lineare

forza di aggancio al piano = 0 quota mezzeria = 3.16 Wa = 0.05 Ta = 0.0754

Comb.	N top	N base	V orto	α0	M*	e*	a0*	aLim	Verifica
SLV 11	-1833	1988	-71	0	0	0	0	6.92171	No, Trazione
SLV 12	-1833	1988	-71	0	0	0	0	6.92171	No, Trazione
SLV 2	-12762	-29913	47	0.041	1474.9	0.964	0.61297	7.86415	No
SLV 1	-12762	-29913	47	0.041	1474.9	0.964	0.61297	7.86415	No
SLV 15	-4053	-577	-45	0.041	591.7	0.922	0.64457	7.86415	No
SLV 16	-4053	-577	-45	0.041	591.7	0.922	0.64457	7.86415	No
SLV 5	-14981	-32477	73	0.039	1700.8	0.969	0.58634	6.92171	No
SLV 6	-14981	-32477	73	0.039	1700.8	0.969	0.58634	6.92171	No
SLV 4	-9289	-21452	9	0.044	1121.7	0.954	0.67495	7.86415	No
SLV 3	-9289	-21452	9	0.044	1121.7	0.954	0.67495	7.86415	No

Tabella dei coefficienti di sicurezza minimi

Stato limite	Coeff.s.	Comb.	Verifica
PF_SLU	3.827	SLU 83	Si
V_SLU	1.78	SLU 81	Si
PF_SLV	0	SLV 12	No
V_SLV	0	SLV 11	No
PFFP_SLV	1.934	SLV 11	Si
R_SLV	0	SLV 12	No

Maschio 65

Verifiche condotte secondo D.M. 17-01-18 (N.T.C.)

Dati geometrici

X ini.	Y ini.	X fin.	Y fin.	Quota i.	Quota.s	l	Sp.	h netta	h ini.	h fin.	a	a.s.,sx	a.s.,dx
-15.01	1.141	-15.01	1.423	L3	L4	0.282	0.14	3.68	3.68	3.68			

Caratteristiche del materiale

(Circolare 7 21-01-19 C8.5.I) Muratura in mattoni pieni e malta di calce LC2_Corti

fb	fk	fvk0	fmedio	τ0	fv0	μ	ϕ	fv,lim	E	G	FC
600000			345000	9000	20000	0.58	0.77	32500	320000000	128000000	1.2

Verifica a pressoflessione nel piano secondo D.M. 17-01-18 NTC §7.8.2.2.1 in combinazioni non sismiche, γM = 3

Comb.	Quota	N	M	σ0	Mu	c.s.	Verifica
SLU 58	1.32	1296	-126.41	0	0	0	No, Trazione
SLU 58	3.42	-3214	239.67	81516	0	0	No, Rottura per schiacciamento
SLU 54	1.32	1278	-124.84	0	0	0	No, Trazione
SLU 54	3.42	-3179	237.01	80630	4.55	0.019	No, M>Mu
SLU 60	1.32	1307	-127.68	0	0	0	No, Trazione
SLU 60	3.42	-3262	243.01	82741	0	0	No, Rottura per schiacciamento
SLU 53	1.32	1282	-125.12	0	0	0	No, Trazione
SLU 53	3.42	-3186	237.62	80806	3.59	0.015	No, M>Mu
SLU 56	1.32	1309	-127.73	0	0	0	No, Trazione
SLU 56	3.42	-3252	242.25	82479	0	0	No, Rottura per schiacciamento
SLU 59	1.32	1292	-126.13	0	0	0	No, Trazione
SLU 59	3.42	-3207	239.06	81340	0.66	0.003	No, M>Mu
SLU 57	1.32	1305	-127.45	0	0	0	No, Trazione
SLU 57	3.42	-3245	241.64	82303	0	0	No, Rottura per schiacciamento
SLU 55	1.32	1263	-123.34	0	0	0	No, Trazione
SLU 55	3.42	-3136	234.02	79549	10.35	0.044	No, M>Mu
SLU 1	1.32	879	-85.45	0	0	0	No, Trazione
SLU 1	3.42	-2153	162.07	54603	99.92	0.617	No, M>Mu
SLU 61	1.32	1303	-127.41	0	0	0	No, Trazione
SLU 61	3.42	-3255	242.4	82565	0	0	No, Rottura per schiacciamento

Verifica a pressoflessione nel piano secondo D.M. 17-01-18 NTC §7.8.2.2.1 in combinazioni sismiche, γM = 2

Comb.	Quota	N	M	σ0	Mu	c.s.	Verifica
SLV 9	1.32	695	-281.1	0	0	0	No, Trazione
SLV 9	3.42	-9601	715.39	243544	0	0	No, Rottura per schiacciamento
SLV 8	1.32	1234	93.12	0	0	0	No, Trazione
SLV 8	3.42	4827	-358.28	0	0	0	No, Trazione
SLV 10	1.32	695	-281.1	0	0	0	No, Trazione
SLV 10	3.42	-9601	715.39	243544	0	0	No, Rottura per schiacciamento
SLV 3	1.32	985	-62.93	0	0	0	No, Trazione
SLV 3	3.42	-1260	104.48	31964	131	1.254	Si
SLV 4	1.32	985	-62.93	0	0	0	No, Trazione
SLV 4	3.42	-1260	104.48	31964	131	1.254	Si
SLV 1	1.32	811	-180.16	0	0	0	No, Trazione
SLV 1	3.42	-5794	443.79	146963	0	0	No, Rottura per schiacciamento
SLV 2	1.32	811	-180.16	0	0	0	No, Trazione
SLV 2	3.42	-5794	443.79	146963	0	0	No, Rottura per schiacciamento
SLV 5	1.32	655	-297.63	0	0	0	No, Trazione
SLV 5	3.42	-10285	772.74	260891	0	0	No, Rottura per schiacciamento
SLV 7	1.32	1234	93.12	0	0	0	No, Trazione
SLV 7	3.42	4827	-358.28	0	0	0	No, Trazione
SLV 6	1.32	655	-297.63	0	0	0	No, Trazione
SLV 6	3.42	-10285	772.74	260891	0	0	No, Rottura per schiacciamento

Verifica a taglio nel piano secondo D.M. 17-01-18 (N.T.C.) §7.8.2.2.2 con rottura per scorrimento in combinazioni non sismiche, γM = 3

Comb.	Quota	N	V par	M	σ0	σN	I'	fvd	Vt scorr.	Vt fess.diag.	Vt,lim	c.s.	Verifica
SLU 1	1.32	879	265	-85.45		0	0	5556	0			0	No, Vu<V
SLU 1	3.42	-2153	-554	162.07		78243	0.1965	10833	298			0.54	No, Vu<V
SLU 54	1.32	1278	385	-124.84		0	0	5556	0			0	No, Vu<V
SLU 54	3.42	-3179	-809	237.01		114267	0.1987	10833	301			0.37	No, Vu<V
SLU 60	1.32	1307	394	-127.68		0	0	5556	0			0	No, Vu<V
SLU 60	3.42	-3262	-828	243.01		117147	0.1989	10833	302			0.36	No, Vu<V
SLU 61	1.32	1303	392	-127.41		0	0	5556	0			0	No, Vu<V
SLU 61	3.42	-3255	-826	242.4		116846	0.199	10833	302			0.37	No, Vu<V
SLU 57	1.32	1305	394	-127.45		0	0	5556	0			0	No, Vu<V
SLU 57	3.42	-3245	-825	241.64		116484	0.199	10833	302			0.37	No, Vu<V
SLU 55	1.32	1263	381	-123.34		0	0	5556	0			0	No, Vu<V
SLU 55	3.42	-3136	-799	234.02		112837	0.1985	10833	301			0.38	No, Vu<V
SLU 59	1.32	1292	390	-126.13		0	0	5556	0			0	No, Vu<V
SLU 59	3.42	-3207	-817	239.06		115254	0.1987	10833	301			0.37	No, Vu<V
SLU 56	1.32	1309	395	-127.73		0	0	5556	0			0	No, Vu<V
SLU 56	3.42	-3252	-827	242.25		116785	0.1989	10833	302			0.36	No, Vu<V
SLU 58	1.32	1296	391	-126.41		0	0	5556	0			0	No, Vu<V
SLU 58	3.42	-3214	-819	239.67		115555	0.1986	10833	301			0.37	No, Vu<V
SLU 53	1.32	1282	387	-125.12		0	0	5556	0			0	No, Vu<V
SLU 53	3.42	-3186	-811	237.62		114568	0.1986	10833	301			0.37	No, Vu<V

Verifica a taglio nel piano secondo D.M. 17-01-18 (N.T.C.) §7.8.2.2.2 con rottura per scorrimento in combinazioni sismiche, γM = 2

Comb.	Quota	N	V par	M	σ0	σN	I'	fvd	Vt scorr.	Vt fess.diag.	Vt,lim	c.s.	Verifica
SLV 2	1.32	811	149	-180.16		0	0	8333	0			0	No, Vu<V
SLV 2	3.42	-5794	-1519	443.79		214879	0.1926	16250	438			0.29	No, Vu<V
SLV 5	1.32	655	12	-297.63		0	0	8333	0			0	No, Vu<V
SLV 5	3.42	-10285	-2781	772.74		372937	0.197	16250	448			0.16	No, Vu<V
SLV 10	1.32	695	51	-281.1		0	0	8333	0			0	No, Vu<V
SLV 10	3.42	-9601	-2611	715.39		344874	0.1989	16250	452			0.17	No, Vu<V
SLV 6	1.32	655	12	-297.63		0	0	8333	0			0	No, Vu<V
SLV 6	3.42	-10285	-2781	772.74		372937	0.197	16250	448			0.16	No, Vu<V
SLV 8	1.32	1234	530	93.12		0	0	8333	0			0	No, Vu<V
SLV 8	3.42	4827	1392	-358.28		0	0	8333	0			0	No, Vu<V
SLV 1	1.32	811	149	-180.16		0	0	8333	0			0	No, Vu<V
SLV 1	3.42	-5794	-1519	443.79		214879	0.1926	16250	438			0.29	No, Vu<V
SLV 9	1.32	695	51	-281.1		0	0	8333	0			0	No, Vu<V
SLV 9	3.42	-9601	-2611	715.39		344874	0.1989	16250	452			0.17	No, Vu<V
SLV 7	1.32	1234	530	93.12		0	0	8333	0			0	No, Vu<V
SLV 7	3.42	4827	1392	-358.28		0	0	8333	0			0	No, Vu<V
SLV 4	1.32	985	305	-62.93		0	0	8333	0			0	No, Vu<V
SLV 4	3.42	-1260	-267	104.48		51836	0.1736	16250	395			1.48	Si
SLV 3	1.32	985	305	-62.93		0	0	8333	0			0	No, Vu<V
SLV 3	3.42	-1260	-267	104.48		51836	0.1736	16250	395			1.48	Si

Verifica a pressoflessione fuori piano D.M. 17-01-18 (N.T.C.)

quota 3.16 Wa 0.03 denominatore 8 γM = 2

Comb.	fd	Sa	σ0	N	M	Mc	Coeff.s.	Verifica
SLV 10	143750	0.31	244194	-9627	13.6	0	0	No, Rottura per schiacciamento
SLV 1	143750	0.31	147590	-5818	13.6	0	0	No, Rottura per schiacciamento
SLV 6	143750	0.31	261535	-10310	13.6	0	0	No, Rottura per schiacciamento
SLV 5	143750	0.31	261535	-10310	13.6	0	0	No, Rottura per schiacciamento
SLV 12	143750	0.31	0	5486	13.6	0	0	No, Trazione
SLV 11	143750	0.31	0	5486	13.6	0	0	No, Trazione
SLV 8	143750	0.31	0	4803	13.6	0	0	No, Trazione
SLV 7	143750	0.31	0	4803	13.6	0	0	No, Trazione

Comb.	fd	Sa	σ0	N	M	Mc	Coeff.s.	Verifica
SLV 2	143750	0.31	147590	-5818	13.6	0	0	No, Rottura per schiacciamento
SLV 9	143750	0.31	244194	-9627	13.6	0	0	No, Rottura per schiacciamento

Verifica dei meccanismi locali di collasso con analisi cinematica lineare

forza di aggancio al piano = 0 quota mezzeria = 3.16 Wa = 0.03 Ta = 0.1615

Comb.	N top	N base	V orto	α0	M*	e*	a0*	aLim	Verifica
SLV 5	3	655	2	0	0	0	0	14.13539	No, Trazione
SLV 2	-707	811	4	0	0	0	0	14.13539	No, Trazione
SLV 7	-2761	1234	-1	0	0	0	0	14.13539	No, Trazione
SLV 10	-218	695	0	0	0	0	0	14.13539	No, Trazione
SLV 3	-1536	985	3	0	0	0	0	14.13539	No, Trazione
SLV 9	-218	695	0	0	0	0	0	14.13539	No, Trazione
SLV 6	3	655	2	0	0	0	0	14.13539	No, Trazione
SLV 1	-707	811	4	0	0	0	0	14.13539	No, Trazione
SLV 8	-2761	1234	-1	0	0	0	0	14.13539	No, Trazione
SLV 4	-1536	985	3	0	0	0	0	14.13539	No, Trazione

Tabella dei coefficienti di sicurezza minimi

Stato limite	Coeff.s.	Comb.	Verifica
PF_SLU	0	SLU 84	No
V_SLU	0	SLU 1	No
PF_SLV	0	SLV 16	No
V_SLV	0	SLV 1	No
PFFP_SLV	0	SLV 16	No
R_SLV	0	SLV 16	No

Maschio 66

Verifiche condotte secondo D.M. 17-01-18 (N.T.C.)

Dati geometrici

X ini.	Y ini.	X fin.	Y fin.	Quota i.	Quota.s	l	Sp.	h netta	h ini.	h fin.	a	a.s.,sx	a.s.,dx
-15.01	2.223	-15.01	6.64	L3	L4	4.417	0.14	3.68	3.68	3.68			

Caratteristiche del materiale

(Circolare 7 21-01-19 C8.5.I) Muratura in mattoni pieni e malta di calce LC2_Corti

fb	fk	fvk0	fmedio	τ0	fv0	μ	ϕ	fv,lim	E	G	FC
600000			345000	9000	20000	0.58	0.77	32500	320000000	128000000	1.2

Verifica a pressoflessione nel piano secondo D.M. 17-01-18 NTC §7.8.2.2.1 in combinazioni non sismiche, γM = 3

Comb.	Quota	N	M	σ0	Mu	c.s.	Verifica
SLU 81	1.32	-39170	-2470.22	63340	19242.26	7.79	Si
SLU 81	3.42	-39000	-15081.28	63064	19450.28	1.29	Si
SLU 80	1.32	-38694	-2272.91	62570	19816.15	8.718	Si
SLU 80	3.42	-38617	-14824.61	62445	19907.78	1.343	Si
SLU 79	1.32	-38715	-2293.23	62603	19791.91	8.631	Si
SLU 79	3.42	-38645	-14863.47	62490	19874.51	1.337	Si
SLU 82	1.32	-39150	-2449.89	63307	19267.32	7.865	Si
SLU 82	3.42	-38971	-15042.42	63018	19484.43	1.295	Si
SLU 77	1.32	-39055	-2336.57	63153	19383.35	8.296	Si
SLU 77	3.42	-39025	-15009.11	63106	19419.03	1.294	Si
SLU 78	1.32	-39034	-2316.24	63120	19408.21	8.379	Si
SLU 78	3.42	-38997	-14970.25	63060	19453.24	1.299	Si
SLU 75	1.32	-38429	-2296.6	62142	20126.56	8.764	Si
SLU 75	3.42	-38310	-14712.59	61949	20264.87	1.377	Si
SLU 83	1.32	-39775	-2489.86	64318	18484.62	7.424	Si
SLU 83	3.42	-39687	-15338.94	64176	18597.08	1.212	Si
SLU 84	1.32	-39755	-2469.53	64285	18510.76	7.496	Si
SLU 84	3.42	-39659	-15300.09	64130	18632.93	1.218	Si
SLU 74	1.32	-38450	-2316.93	62175	20102.79	8.676	Si
SLU 74	3.42	-38338	-14751.45	61994	20232.35	1.372	Si

Verifica a pressoflessione nel piano secondo D.M. 17-01-18 NTC §7.8.2.2.1 in combinazioni sismiche, γM = 2

Comb.	Quota	N	M	σ0	Mu	c.s.	Verifica
SLV 16	1.32	-20000	6241.43	32340	32480.14	5.204	Si
SLV 16	3.42	-24956	-14934.35	40356	36914.48	2.472	Si
SLV 5	1.32	-26437	-16599.16	42750	37960.47	2.287	Si
SLV 5	3.42	-20420	-938.11	33020	32912.26	35.084	Si
SLV 8	1.32	-29814	11787.45	48210	39866.43	3.382	Si
SLV 8	3.42	-32944	-17177.32	53272	41038.07	2.389	Si
SLV 12	1.32	-25830	13813.28	41768	37546.81	2.718	Si
SLV 12	3.42	-31281	-18765.36	50582	40486.78	2.158	Si
SLV 6	1.32	-26437	-16599.16	42750	37960.47	2.287	Si
SLV 6	3.42	-20420	-938.11	33020	32912.26	35.084	Si
SLV 11	1.32	-25830	13813.28	41768	37546.81	2.718	Si
SLV 11	3.42	-31281	-18765.36	50582	40486.78	2.158	Si
SLV 10	1.32	-22453	-14573.34	36307	34854.41	2.392	Si
SLV 10	3.42	-18757	-2526.15	30330	31143.01	12.328	Si
SLV 9	1.32	-22453	-14573.34	36307	34854.41	2.392	Si
SLV 9	3.42	-18757	-2526.15	30330	31143.01	12.328	Si
SLV 15	1.32	-20000	6241.43	32340	32480.14	5.204	Si
SLV 15	3.42	-24956	-14934.35	40356	36914.48	2.472	Si
SLV 7	1.32	-29814	11787.45	48210	39866.43	3.382	Si
SLV 7	3.42	-32944	-17177.32	53272	41038.07	2.389	Si

Verifica a taglio nel piano secondo D.M. 17-01-18 (N.T.C.) §7.8.2.2.2 con rottura per scorrimento in combinazioni non sismiche, γM = 3

Comb.	Quota	N	V par	M	σ0	σN	l'	fvd	Vt scorr.	Vt fess.diag.	Vt,lim	c.s.	Verifica
SLU 82	1.32	-39150	2572	-2449.89		63307	4.4172	10833	6699			2.6	Si
SLU 82	3.42	-38971	1373	-15042.42		63018	4.4172	10833	6699			4.88	Si
SLU 81	1.32	-39170	2580	-2470.22		63340	4.4172	10833	6699			2.6	Si
SLU 81	3.42	-39000	1381	-15081.28		63064	4.4172	10833	6699			4.85	Si
SLU 79	1.32	-38715	2546	-2293.23		62603	4.4172	10833	6699			2.63	Si
SLU 79	3.42	-38645	1356	-14863.47		62490	4.4172	10833	6699			4.94	Si
SLU 80	1.32	-38694	2538	-2272.91		62570	4.4172	10833	6699			2.64	Si
SLU 80	3.42	-38617	1348	-14824.61		62445	4.4172	10833	6699			4.97	Si
SLU 78	1.32	-39034	2564	-2316.24		63120	4.4172	10833	6699			2.61	Si
SLU 78	3.42	-38997	1364	-14970.25		63060	4.4172	10833	6699			4.91	Si
SLU 84	1.32	-39755	2615	-2469.53		64285	4.4172	10833	6699			2.56	Si
SLU 84	3.42	-39659	1398	-15300.09		64130	4.4172	10833	6699			4.79	Si
SLU 83	1.32	-39775	2623	-2489.86		64318	4.4172	10833	6699			2.55	Si
SLU 83	3.42	-39687	1406	-15338.94		64176	4.4172	10833	6699			4.77	Si
SLU 74	1.32	-38450	2528	-2316.93		62175	4.4172	10833	6699			2.65	Si
SLU 74	3.42	-38338	1348	-14751.45		61994	4.4172	10833	6699			4.97	Si
SLU 75	1.32	-38429	2521	-2296.6		62142	4.4172	10833	6699			2.66	Si
SLU 75	3.42	-38310	1340	-14712.59		61949	4.4172	10833	6699			5	Si
SLU 77	1.32	-39055	2572	-2336.57		63153	4.4172	10833	6699			2.6	Si
SLU 77	3.42	-39025	1372	-15009.11		63106	4.4172	10833	6699			4.88	Si

Verifica a taglio nel piano secondo D.M. 17-01-18 (N.T.C.) §7.8.2.2.2 con rottura per scorrimento in combinazioni sismiche, γM = 2

Comb.	Quota	N	V par	M	σ0	σN	l'	fvd	Vt scorr.	Vt fess.diag.	Vt,lim	c.s.	Verifica
SLV 9	1.32	-22453	-23383	-14573.34		36307	4.4172	15595	9644			0.41	No, Vu<V
SLV 9	3.42	-18757	-14895	-2526.15		30330	4.4172	14399	8905			0.6	No, Vu<V
SLV 4	1.32	-33280	15266	-511.33		53815	4.4172	16250	10049			0.66	No, Vu<V
SLV 4	3.42	-30502	7320	-9640.89		49323	4.4172	16250	10049			1.37	Si
SLV 7	1.32	-29814	26776	11787.45		48210	4.4172	16250	10049			0.38	No, Vu<V
SLV 7	3.42	-32944	16668	-17177.32		53272	4.4172	16250	10049			0.6	No, Vu<V
SLV 6	1.32	-26437	-19397	-16599.16		42750	4.4172	16250	10049			0.52	No, Vu<V
SLV 6	3.42	-20420	-13775	-938.11		33020	4.4172	14937	9237			0.67	No, Vu<V
SLV 12	1.32	-25830	22790	13813.28		41768	4.4172	16250	10049			0.44	No, Vu<V
SLV 12	3.42	-31281	15548	-18765.36		50582	4.4172	16250	10049			0.65	No, Vu<V
SLV 5	1.32	-26437	-19397	-16599.16		42750	4.4172	16250	10049			0.52	No, Vu<V
SLV 5	3.42	-20420	-13775	-938.11		33020	4.4172	14937	9237			0.67	No, Vu<V
SLV 8	1.32	-29814	26776	11787.45		48210	4.4172	16250	10049			0.38	No, Vu<V
SLV 8	3.42	-32944	16668	-17177.32		53272	4.4172	16250	10049			0.6	No, Vu<V
SLV 3	1.32	-33280	15266	-511.33		53815	4.4172	16250	10049			0.66	No, Vu<V
SLV 3	3.42	-30502	7320	-9640.89		49323	4.4172	16250	10049			1.37	Si
SLV 11	1.32	-25830	22790	13813.28		41768	4.4172	16250	10049			0.44	No, Vu<V
SLV 11	3.42	-31281	15548	-18765.36		50582	4.4172	16250	10049			0.65	No, Vu<V
SLV 10	1.32	-22453	-23383	-14573.34		36307	4.4172	15595	9644			0.41	No, Vu<V
SLV 10	3.42	-18757	-14895	-2526.15		30330	4.4172	14399	8905			0.6	No, Vu<V

Verifica a pressoflessione fuori piano D.M. 17-01-18 (N.T.C.)

quota 3.16 Wa 0.03 denominatore 8 γM = 2

Comb.	fd	Sa	σ0	N	M	Mc	Coeff.s.	Verifica
SLV 9	143750	0.31	30401	-18800	213.34	988.59	4.63	Si
SLV 10	143750	0.31	30401	-18800	213.34	988.59	4.63	Si
SLV 14	143750	0.31	33167	-20511	213.34	1046.03	4.9	Si
SLV 13	143750	0.31	33167	-20511	213.34	1046.03	4.9	Si
SLV 6	143750	0.31	34144	-21115	213.34	1065.03	4.99	Si
SLV 5	143750	0.31	34144	-21115	213.34	1065.03	4.99	Si
SLV 16	143750	0.31	39281	-24292	213.34	1153.77	5.41	Si
SLV 15	143750	0.31	39281	-24292	213.34	1153.77	5.41	Si
SLV 1	143750	0.31	45643	-28226	213.34	1237.76	5.8	Si
SLV 2	143750	0.31	45643	-28226	213.34	1237.76	5.8	Si

Verifica dei meccanismi locali di collasso con analisi cinematica lineare

forza di aggancio al piano = 0 quota mezzeria = 3.16 Wa = 0.03 Ta = 0.1615

Comb.	N top	N base	V orto	α0	M*	e*	a0*	aLim	Verifica
SLV 3	-23961	-33280	9	0.02	2760	0.965	0.3036	14.13539	No
SLV 4	-23961	-33280	9	0.02	2760	0.965	0.3036	14.13539	No
SLV 1	-22786	-32267	9	0.02	2640.4	0.964	0.30511	14.13539	No
SLV 2	-22786	-32267	9	0.02	2640.4	0.964	0.30511	14.13539	No
SLV 7	-23695	-29814	4	0.02	2732.8	0.965	0.30696	14.13539	No
SLV 8	-23695	-29814	4	0.02	2732.8	0.965	0.30696	14.13539	No
SLV 11	-22291	-25830	-1	0.021	2590.1	0.963	0.31079	14.13539	No
SLV 12	-22291	-25830	-1	0.021	2590.1	0.963	0.31079	14.13539	No
SLV 16	-19284	-20000	-7	0.021	2284.2	0.958	0.31121	14.13539	No
SLV 15	-19284	-20000	-7	0.021	2284.2	0.958	0.31121	14.13539	No

Tabella dei coefficienti di sicurezza minimi

Stato limite	Coeff.s.	Comb.	Verifica
PF_SLU	1.212	SLU 83	Si
V_SLU	2.554	SLU 83	Si
PF_SLV	2.158	SLV 11	Si
V_SLV	0.375	SLV 7	No
PFFP_SLV	4.634	SLV 9	Si
R_SLV	0.021	SLV 3	No

Maschio 67

Verifiche condotte secondo D.M. 17-01-18 (N.T.C.)

Dati geometrici

X ini.	Y ini.	X fin.	Y fin.	Quota i.	Quota.s	l	Sp.	h netta	h ini.	h fin.	a	a.s.,sx	a.s.,dx
-13.727	-4.696	-13.727	-3.323	L3	Z medio 333 cm	1.373	0.28	2.01	2.01	2.01			

Caratteristiche del materiale

(Circolare 7 21-01-19 C8.5.I) Muratura in mattoni pieni e malta di calce LC2_Corti

fb	fk	fvk0	fmedio	τ0	fv0	μ	ϕ	fv,lim	E	G	FC
600000			345000	9000	20000	0.58	0.77	32500	320000000	128000000	1.2

Verifica a pressoflessione nel piano secondo D.M. 17-01-18 NTC §7.8.2.2.1 in combinazioni non sismiche, γM = 3

Comb.	Quota	N	M	σ0	Mu	c.s.	Verifica
SLU 81	1.32	-25503	866.07	66316	3255.59	3.759	Si
SLU 81	3.33	-18228	-1501.77	47400	5233.73	3.485	Si
SLU 80	1.32	-24824	947.08	64552	3538.07	3.736	Si
SLU 80	3.33	-17829	-1477.66	46362	5275.16	3.57	Si
SLU 75	1.32	-24706	936.26	64243	3585.5	3.83	Si
SLU 75	3.33	-17727	-1467.73	46097	5284.59	3.601	Si
SLU 78	1.32	-24939	959.29	64850	3491.71	3.64	Si
SLU 78	3.33	-17910	-1479.97	46571	5267.37	3.559	Si
SLU 79	1.32	-25059	875.51	65161	3442.76	3.932	Si
SLU 79	3.33	-17940	-1481.79	46650	5264.36	3.553	Si
SLU 77	1.32	-25173	887.72	65460	3395.22	3.825	Si
SLU 77	3.33	-18020	-1484.1	46859	5256.18	3.542	Si
SLU 74	1.32	-24940	864.7	64852	3491.41	4.038	Si
SLU 74	3.33	-17838	-1471.86	46385	5274.29	3.583	Si
SLU 84	1.32	-25502	960.66	66314	3255.91	3.389	Si
SLU 84	3.33	-18300	-1509.88	47586	5225.59	3.461	Si
SLU 83	1.32	-25736	889.09	66923	3153.64	3.547	Si
SLU 83	3.33	-18411	-1514.01	47874	5212.5	3.443	Si
SLU 82	1.32	-25268	937.64	65706	3355.46	3.579	Si
SLU 82	3.33	-18117	-1497.64	47112	5245.94	3.503	Si

Verifica a pressoflessione nel piano secondo D.M. 17-01-18 NTC §7.8.2.2.1 in combinazioni sismiche, γM = 2

Comb.	Quota	N	M	σ0	Mu	c.s.	Verifica
SLV 5	1.32	-27155	-866.42	70613	7871.16	9.085	Si
SLV 5	3.33	-19428	-1838.05	50520	7825.39	4.257	Si
SLV 11	1.32	-7853	2014.97	20422	4491.69	2.229	Si
SLV 11	3.33	-5591	-269.53	14537	3382.35	12.549	Si
SLV 7	1.32	-7071	2095.01	18388	4125.25	1.969	Si
SLV 7	3.33	-6581	-513.26	17112	3886.18	7.572	Si
SLV 12	1.32	-7853	2014.97	20422	4491.69	2.229	Si
SLV 12	3.33	-5591	-269.53	14537	3382.35	12.549	Si
SLV 9	1.32	-27937	-946.45	72647	7778.55	8.219	Si
SLV 9	3.33	-18438	-1594.32	47946	7693.38	4.825	Si
SLV 10	1.32	-27937	-946.45	72647	7778.55	8.219	Si
SLV 10	3.33	-18438	-1594.32	47946	7693.38	4.825	Si
SLV 1	1.32	-19214	263.46	49962	7799.2	29.603	Si
SLV 1	3.33	-16087	-1658.73	41831	7265.07	4.38	Si
SLV 6	1.32	-27155	-866.42	70613	7871.16	9.085	Si
SLV 6	3.33	-19428	-1838.05	50520	7825.39	4.257	Si
SLV 8	1.32	-7071	2095.01	18388	4125.25	1.969	Si
SLV 8	3.33	-6581	-513.26	17112	3886.18	7.572	Si
SLV 2	1.32	-19214	263.46	49962	7799.2	29.603	Si
SLV 2	3.33	-16087	-1658.73	41831	7265.07	4.38	Si

Verifica a taglio nel piano secondo D.M. 17-01-18 (N.T.C.) §7.8.2.2.2 con rottura per scorrimento in combinazioni non sismiche, γM = 3

Comb.	Quota	N	V par	M	σ0	σN	l'	fvd	Vt scorr.	Vt fess.diag.	Vt,lim	c.s.	Verifica
SLU 74	1.32	-24940	-3320	864.7		64852	1.3734	10833	4166			1.25	Si
SLU 74	3.33	-17838	-506	-1471.86		46385	1.3734	10833	4166			8.23	Si
SLU 84	1.32	-25502	-3236	960.66		66314	1.3734	10833	4166			1.29	Si
SLU 84	3.33	-18300	-344	-1509.88		47586	1.3734	10833	4166			12.12	Si
SLU 60	1.32	-23753	-3131	763.78		61766	1.3734	10833	4166			1.33	Si
SLU 60	3.33	-16985	-521	-1424.09		44167	1.3734	10833	4166			7.99	Si
SLU 79	1.32	-25059	-3321	875.51		65161	1.3734	10833	4166			1.25	Si
SLU 79	3.33	-17940	-483	-1481.79		46650	1.3734	10833	4166			8.63	Si
SLU 78	1.32	-24939	-3115	959.29		64850	1.3734	10833	4166			1.34	Si
SLU 78	3.33	-17910	-286	-1479.97		46571	1.3734	10833	4166			14.55	Si
SLU 77	1.32	-25173	-3345	887.72		65460	1.3734	10833	4166			1.25	Si
SLU 77	3.33	-18020	-487	-1484.1		46859	1.3734	10833	4166			8.56	Si
SLU 81	1.32	-25503	-3441	866.07		66316	1.3734	10833	4166			1.21	Si
SLU 81	3.33	-18228	-563	-1501.77		47400	1.3734	10833	4166			7.4	Si
SLU 62	1.32	-23987	-3156	786.8		62374	1.3734	10833	4166			1.32	Si
SLU 62	3.33	-17167	-502	-1436.33		44641	1.3734	10833	4166			8.3	Si
SLU 82	1.32	-25268	-3211	937.64		65706	1.3734	10833	4166			1.3	Si
SLU 82	3.33	-18117	-363	-1497.64		47112	1.3734	10833	4166			11.48	Si
SLU 83	1.32	-25736	-3466	889.09		66923	1.3734	10833	4166			1.2	Si
SLU 83	3.33	-18411	-544	-1514.01		47874	1.3734	10833	4166			7.66	Si

Verifica a taglio nel piano secondo D.M. 17-01-18 (N.T.C.) §7.8.2.2.2 con rottura per scorrimento in combinazioni sismiche, γM = 2

Comb.	Quota	N	V par	M	σ0	σN	l'	fvd	Vt scorr.	Vt fess.diag.	Vt,lim	c.s.	Verifica
SLV 9	1.32	-27937	-8602	-946.45		72647	1.3734	16250	6249			0.73	No, Vu<V
SLV 9	3.33	-18438	-5204	-1594.32		47946	1.3734	16250	6249			1.2	Si
SLV 14	1.32	-21820	-7610	-3.33		56740	1.3734	16250	6249			0.82	No, Vu<V
SLV 14	3.33	-12786	-3848	-846.29		33249	1.3734	14983	5762			1.5	Si
SLV 6	1.32	-27155	-6327	-866.42		70613	1.3734	16250	6249			0.99	No, Vu<V
SLV 6	3.33	-19428	-3856	-1838.05		50520	1.3734	16250	6249			1.62	Si
SLV 10	1.32	-27937	-8602	-946.45		72647	1.3734	16250	6249			0.73	No, Vu<V
SLV 10	3.33	-18438	-5204	-1594.32		47946	1.3734	16250	6249			1.2	Si

Comb.	Quota	N	V par	M	σ0	σN	l'	fvd	Vt scorr.	Vt fess.diag.	Vt,lim	c.s.	Verifica
SLV 7	1.32	-7071	4089	2095.01		21560	1.1714	12645	4147			1.01	Si
SLV 7	3.33	-6581	4516	-513.26		17112	1.3734	11756	4521			1	Si
SLV 11	1.32	-7853	1814	2014.97		21735	1.2904	12680	4582			2.53	Si
SLV 11	3.33	-5591	3167	-269.53		14537	1.3734	11241	4323			1.36	Si
SLV 12	1.32	-7853	1814	2014.97		21735	1.2904	12680	4582			2.53	Si
SLV 12	3.33	-5591	3167	-269.53		14537	1.3734	11241	4323			1.36	Si
SLV 8	1.32	-7071	4089	2095.01		21560	1.1714	12645	4147			1.01	Si
SLV 8	3.33	-6581	4516	-513.26		17112	1.3734	11756	4521			1	Si
SLV 13	1.32	-21820	-7610	-3.33		56740	1.3734	16250	6249			0.82	No, Vu<V
SLV 13	3.33	-12786	-3848	-846.29		33249	1.3734	14983	5762			1.5	Si
SLV 5	1.32	-27155	-6327	-866.42		70613	1.3734	16250	6249			0.99	No, Vu<V
SLV 5	3.33	-19428	-3856	-1838.05		50520	1.3734	16250	6249			1.62	Si

Verifica a pressoflessione fuori piano D.M. 17-01-18 (N.T.C.)

quota 2.325 Wa 0.05 denominatore 8 γM = 2

Comb.	fd	Sa	σ0	N	M	Mc	Coeff.s.	Verifica
SLV 12	143750	0.29	17199	-6614	35.73	795.62	22.26	Si
SLV 11	143750	0.29	17199	-6614	35.73	795.62	22.26	Si
SLV 8	143750	0.29	19969	-7679	35.73	899.41	25.17	Si
SLV 7	143750	0.29	19969	-7679	35.73	899.41	25.17	Si
SLV 16	143750	0.29	30515	-11735	35.73	1232.58	34.49	Si
SLV 15	143750	0.29	30515	-11735	35.73	1232.58	34.49	Si
SLV 4	143750	0.29	39750	-15286	35.73	1443.87	40.41	Si
SLV 3	143750	0.29	39750	-15286	35.73	1443.87	40.41	Si
SLV 14	143750	0.29	44699	-17189	35.73	1526.17	42.71	Si
SLV 13	143750	0.29	44699	-17189	35.73	1526.17	42.71	Si

Verifica dei meccanismi locali di collasso con analisi cinematica lineare

forza di aggancio al piano = 0 quota mezzeria = 2.325 Wa = 0.05 Ta = 0.0241

Comb.	N top	N base	V orto	α0	M*	e*	a0*	aLim	Verifica
SLV 3	-12232	-13188	-71	0.068	1354.3	0.975	1.01245	3.65698	No
SLV 4	-12232	-13188	-71	0.068	1354.3	0.975	1.01245	3.65698	No
SLV 2	-16087	-19214	-61	0.069	1747	0.981	1.02142	3.65698	No
SLV 1	-16087	-19214	-61	0.069	1747	0.981	1.02142	3.65698	No
SLV 13	-12786	-21820	27	0.071	1410.7	0.976	1.06078	3.65698	No
SLV 14	-12786	-21820	27	0.071	1410.7	0.976	1.06078	3.65698	No
SLV 8	-6581	-7071	-51	0.069	779	0.959	1.05006	3.52744	No
SLV 7	-6581	-7071	-51	0.069	779	0.959	1.05006	3.52744	No
SLV 6	-19428	-27155	-19	0.071	2087.4	0.984	1.051	3.52744	No
SLV 5	-19428	-27155	-19	0.071	2087.4	0.984	1.051	3.52744	No

Tabella dei coefficienti di sicurezza minimi

Stato limite	Coeff.s.	Comb.	Verifica
PF_SLU	3.389	SLU 84	Si
V_SLU	1.202	SLU 83	Si
PF_SLV	1.969	SLV 7	Si
V_SLV	0.726	SLV 9	No
PFFP_SLV	22.265	SLV 11	Si
R_SLV	0.277	SLV 3	No

Maschio 68

Verifiche condotte secondo D.M. 17-01-18 (N.T.C.)

Dati geometrici

X ini.	Y ini.	X fin.	Y fin.	Quota i.	Quota.s	l	Sp.	h netta	h ini.	h fin.	a	a.s.,sx	a.s.,dx
-13.727	-4.696	-13.727	-3.323	Z medio 333 cm	L4	1.373	0.28	1.67	1.67	1.67			

Caratteristiche del materiale

(Circolare 7 21-01-19 C8.5.I) Muratura in mattoni pieni e malta di calce LC2_Corti

fb	fk	fvk0	fmedio	τ0	fv0	μ	ϕ	fv,lim	E	G	FC
600000			345000	9000	20000	0.58	0.77	32500	320000000	128000000	1.2

Verifica a pressoflessione nel piano secondo D.M. 17-01-18 NTC §7.8.2.2.1 in combinazioni non sismiche, γM = 3

Comb.	Quota	N	M	σ0	Mu	c.s.	Verifica
SLU 77	3.33	-20037	-19.09	52104	4958.55	259.797	Si
SLU 77	5	-17313	435.28	45020	5318.33	12.218	Si
SLU 84	3.33	-20258	-19.81	52678	4915.1	248.162	Si
SLU 84	5	-17551	435.55	45639	5299.87	12.168	Si
SLU 75	3.33	-19691	17.89	51203	5022.33	280.807	Si
SLU 75	5	-17019	414.2	44257	5337.67	12.887	Si
SLU 83	3.33	-20397	-71.08	53039	4886.78	68.75	Si
SLU 83	5	-17638	453.7	45865	5292.51	11.665	Si
SLU 74	3.33	-19829	-33.39	51564	4997.46	149.676	Si
SLU 74	5	-17106	432.35	44483	5332.34	12.333	Si
SLU 80	3.33	-19804	25.46	51498	5002.08	196.482	Si
SLU 80	5	-17137	407.14	44563	5330.36	13.092	Si
SLU 79	3.33	-19943	-25.82	51858	4976.51	192.77	Si
SLU 79	5	-17224	425.28	44789	5324.57	12.52	Si
SLU 81	3.33	-20189	-85.38	52498	4928.96	57.728	Si
SLU 81	5	-17431	450.77	45328	5309.45	11.779	Si
SLU 78	3.33	-19899	32.19	51744	4984.69	154.864	Si
SLU 78	5	-17226	417.13	44794	5324.46	12.764	Si
SLU 82	3.33	-20050	-34.11	52138	4956.02	145.302	Si
SLU 82	5	-17344	432.62	45102	5316.03	12.288	Si

Verifica a pressoflessione nel piano secondo D.M. 17-01-18 NTC §7.8.2.2.1 in combinazioni sismiche, γM = 2

Comb.	Quota	N	M	σ0	Mu	c.s.	Verifica
SLV 10	3.33	-20352	-1602.71	52922	7922.69	4.943	Si
SLV 10	5	-17650	724.61	45896	7567.81	10.444	Si
SLV 7	3.33	-7593	1579.11	19746	4371.86	2.769	Si
SLV 7	5	-6269	-181.37	16301	3730.54	20.568	Si
SLV 15	3.33	-9911	249.65	25772	5370.56	21.512	Si
SLV 15	5	-8932	1096.42	23227	4967.88	4.531	Si
SLV 14	3.33	-14093	-669.25	36648	6775.38	10.124	Si
SLV 14	5	-12564	1209.57	32672	6321.13	5.226	Si
SLV 8	3.33	-7593	1579.11	19746	4371.86	2.769	Si
SLV 8	5	-6269	-181.37	16301	3730.54	20.568	Si
SLV 9	3.33	-20352	-1602.71	52922	7922.69	4.943	Si
SLV 9	5	-17650	724.61	45896	7567.81	10.444	Si
SLV 12	3.33	-6411	1460.31	16671	3801.96	2.604	Si
SLV 12	5	-5542	347.45	14411	3356.99	9.662	Si
SLV 11	3.33	-6411	1460.31	16671	3801.96	2.604	Si
SLV 11	5	-5542	347.45	14411	3356.99	9.662	Si
SLV 16	3.33	-9911	249.65	25772	5370.56	21.512	Si
SLV 16	5	-8932	1096.42	23227	4967.88	4.531	Si
SLV 13	3.33	-14093	-669.25	36648	6775.38	10.124	Si
SLV 13	5	-12564	1209.57	32672	6321.13	5.226	Si

Verifica a taglio nel piano secondo D.M. 17-01-18 (N.T.C.) §7.8.2.2.2 con rottura per scorrimento in combinazioni non sismiche, γM = 3

Comb.	Quota	N	V par	M	σ0	σN	I'	fvd	Vt scorr.	Vt fess.diag.	Vt,lim	c.s.	Verifica
SLU 39	3.33	-16717	-895	-78.53		43471	1.3734	10833	4166			4.66	Si
SLU 39	5	-14500	-784	406.06		37704	1.3734	10583	4070			5.19	Si
SLU 60	3.33	-18818	-940	-107.55		48933	1.3734	10833	4166			4.43	Si
SLU 60	5	-16190	-810	379.57		42100	1.3734	10833	4166			5.15	Si
SLU 77	3.33	-20037	-909	-19.09		52104	1.3734	10833	4166			4.59	Si
SLU 77	5	-17313	-801	435.28		45020	1.3734	10833	4166			5.2	Si
SLU 83	3.33	-20397	-1005	-71.08		53039	1.3734	10833	4166			4.14	Si
SLU 83	5	-17638	-876	453.7		45865	1.3734	10833	4166			4.76	Si
SLU 53	3.33	-18458	-844	-55.56		47998	1.3734	10833	4166			4.94	Si
SLU 53	5	-15865	-735	361.15		41255	1.3734	10833	4166			5.67	Si
SLU 41	3.33	-16925	-874	-64.23		44011	1.3734	10833	4166			4.77	Si
SLU 41	5	-14706	-760	408.99		38241	1.3734	10654	4097			5.39	Si
SLU 81	3.33	-20189	-1026	-85.38		52498	1.3734	10833	4166			4.06	Si
SLU 81	5	-17431	-900	450.77		45328	1.3734	10833	4166			4.63	Si
SLU 74	3.33	-19829	-929	-33.39		51564	1.3734	10833	4166			4.48	Si
SLU 74	5	-17106	-825	432.35		44483	1.3734	10833	4166			5.05	Si
SLU 62	3.33	-19025	-920	-93.25		49473	1.3734	10833	4166			4.53	Si
SLU 62	5	-16396	-786	382.5		42637	1.3734	10833	4166			5.3	Si
SLU 79	3.33	-19943	-903	-25.82		51858	1.3734	10833	4166			4.62	Si
SLU 79	5	-17224	-791	425.28		44789	1.3734	10833	4166			5.27	Si

Verifica a taglio nel piano secondo D.M. 17-01-18 (N.T.C.) §7.8.2.2.2 con rottura per scorrimento in combinazioni sismiche, γM = 2

Comb.	Quota	N	V par	M	σ0	σN	I'	fvd	Vt scorr.	Vt fess.diag.	Vt,lim	c.s.	Verifica
SLV 14	3.33	-14093	-4674	-669.25		36648	1.3734	15663	6023			1.29	Si
SLV 14	5	-12564	-4600	1209.57		32672	1.3734	14868	5718			1.24	Si
SLV 11	3.33	-6411	3253	1460.31		16671	1.3734	11668	4487			1.38	Si
SLV 11	5	-5542	2550	347.45		14411	1.3734	11216	4313			1.69	Si
SLV 7	3.33	-7593	4849	1579.11		19746	1.3734	12282	4723			0.97	No, Vu<V
SLV 7	5	-6269	4262	-181.37		16301	1.3734	11594	4458			1.05	Si
SLV 10	3.33	-20352	-6077	-1602.71		52922	1.3734	16250	6249			1.03	Si
SLV 10	5	-17650	-5376	724.61		45896	1.3734	16250	6249			1.16	Si
SLV 12	3.33	-6411	3253	1460.31		16671	1.3734	11668	4487			1.38	Si
SLV 12	5	-5542	2550	347.45		14411	1.3734	11216	4313			1.69	Si
SLV 9	3.33	-20352	-6077	-1602.71		52922	1.3734	16250	6249			1.03	Si
SLV 9	5	-17650	-5376	724.61		45896	1.3734	16250	6249			1.16	Si
SLV 5	3.33	-21534	-4481	-1483.91		55996	1.3734	16250	6249			1.39	Si
SLV 5	5	-18376	-3663	195.79		47785	1.3734	16250	6249			1.71	Si
SLV 8	3.33	-7593	4849	1579.11		19746	1.3734	12282	4723			0.97	No, Vu<V
SLV 8	5	-6269	4262	-181.37		16301	1.3734	11594	4458			1.05	Si
SLV 13	3.33	-14093	-4674	-669.25		36648	1.3734	15663	6023			1.29	Si
SLV 13	5	-12564	-4600	1209.57		32672	1.3734	14868	5718			1.24	Si
SLV 6	3.33	-21534	-4481	-1483.91		55996	1.3734	16250	6249			1.39	Si
SLV 6	5	-18376	-3663	195.79		47785	1.3734	16250	6249			1.71	Si

Verifica a pressoflessione fuori piano D.M. 17-01-18 (N.T.C.)

quota 4.165 Wa 0.05 denominatore 8 γM = 2

Comb.	fd	Sa	σ0	N	M	Mc	Coeff.s.	Verifica
SLV 12	143750	0.33	14205	-5463	27.9	675.86	24.23	Si
SLV 11	143750	0.33	14205	-5463	27.9	675.86	24.23	Si
SLV 8	143750	0.33	17453	-6712	27.9	805.45	28.87	Si
SLV 7	143750	0.33	17453	-6712	27.9	805.45	28.87	Si
SLV 15	143750	0.33	22655	-8712	27.9	993.58	35.62	Si
SLV 16	143750	0.33	22655	-8712	27.9	993.58	35.62	Si
SLV 13	143750	0.33	33148	-12747	27.9	1300.48	46.62	Si
SLV 14	143750	0.33	33148	-12747	27.9	1300.48	46.62	Si
SLV 4	143750	0.33	33484	-12877	27.9	1308.73	46.91	Si
SLV 3	143750	0.33	33484	-12877	27.9	1308.73	46.91	Si

Verifica dei meccanismi locali di collasso con analisi cinematica lineare

forza di aggancio al piano = 0 quota mezzeria = 4.165 Wa = 0.05 Ta = 0.0166

Comb.	N top	N base	V orto	α0	M*	e*	a0*	aLim	Verifica
SLV 1	-14986	-18034	-15	0.086	1616.6	0.982	1.27229	3.62994	No
SLV 2	-14986	-18034	-15	0.086	1616.6	0.982	1.27229	3.62994	No
SLV 5	-18376	-21534	-19	0.085	1962.1	0.985	1.25937	3.54326	No

Comb.	N top	N base	V orto	α0	M*	e*	a0*	aLim	Verifica
SLV 6	-18376	-21534	-19	0.085	1962.1	0.985	1.25937	3.54326	No
SLV 9	-17650	-20352	-15	0.086	1888	0.985	1.26386	3.54326	No
SLV 10	-17650	-20352	-15	0.086	1888	0.985	1.26386	3.54326	No
SLV 14	-12564	-14093	-3	0.087	1369.8	0.979	1.29546	3.62994	No
SLV 13	-12564	-14093	-3	0.087	1369.8	0.979	1.29546	3.62994	No
SLV 3	-11354	-13852	-7	0.087	1246.5	0.977	1.29754	3.62994	No
SLV 4	-11354	-13852	-7	0.087	1246.5	0.977	1.29754	3.62994	No

Tabella dei coefficienti di sicurezza minimi

Stato limite	Coeff.s.	Comb.	Verifica
PF_SLU	11.665	SLU 83	Si
V_SLU	4.062	SLU 81	Si
PF_SLV	2.604	SLV 11	Si
V_SLV	0.974	SLV 7	No
PFFP_SLV	24.227	SLV 11	Si
R_SLV	0.35	SLV 1	No

Maschio 70

Verifiche condotte secondo D.M. 17-01-18 (N.T.C.)

Dati geometrici

X ini.	Y ini.	X fin.	Y fin.	Quota i.	Quota.s	l	Sp.	h netta	h ini.	h fin.	a	a.s.,sx	a.s.,dx
-13.727	-3.323	-13.727	-0.354	Z medio 232 cm	L4	2.969	0.28	2.675	1.67	3.68			

Caratteristiche del materiale

(Circolare 7 21-01-19 C8.5.I) Muratura in mattoni pieni e malta di calce LC2_Corti

fb	fk	fvk0	fmedio	τ0	fv0	μ	ϕ	fv,lim	E	G	FC
600000			345000	9000	20000	0.58	0.77	32500	320000000	128000000	1.2

Verifica a pressoflessione nel piano secondo D.M. 17-01-18 NTC §7.8.2.2.1 in combinazioni non sismiche, γM = 3

Comb.	Quota	N	M	σ0	Mu	c.s.	Verifica
SLU 75	3.33	-50792	4528.29	61094	18851.15	4.163	Si
SLU 75	5	-44898	2303.13	54004	22464.95	9.754	Si
SLU 80	3.33	-51128	4577.2	61498	18599.58	4.064	Si
SLU 80	5	-45212	2326.89	54382	22310.94	9.588	Si
SLU 77	3.33	-51477	4582.2	61918	18332.68	4.001	Si
SLU 77	5	-45671	2414.78	54935	22077.58	9.143	Si
SLU 82	3.33	-51780	4705.64	62282	18096.51	3.846	Si
SLU 82	5	-45775	2431.79	55059	22023.58	9.057	Si
SLU 81	3.33	-51735	4639.86	62228	18132.03	3.908	Si
SLU 81	5	-45850	2467.56	55150	21984.03	8.909	Si
SLU 74	3.33	-50747	4462.5	61040	18884.71	4.232	Si
SLU 74	5	-44973	2338.9	54095	22428.31	9.589	Si
SLU 84	3.33	-52510	4825.34	63160	17511.43	3.629	Si
SLU 84	5	-46473	2507.67	55899	21648.32	8.633	Si
SLU 79	3.33	-51082	4511.42	61443	18633.8	4.13	Si
SLU 79	5	-45287	2362.66	54472	22273.26	9.427	Si
SLU 83	3.33	-52464	4759.56	63106	17548.4	3.687	Si
SLU 83	5	-46548	2543.44	55990	21606.46	8.495	Si
SLU 78	3.33	-51522	4647.99	61972	18297.68	3.937	Si
SLU 78	5	-45596	2379.01	54844	22116.54	9.297	Si

Verifica a pressoflessione nel piano secondo D.M. 17-01-18 NTC §7.8.2.2.1 in combinazioni sismiche, γM = 2

Comb.	Quota	N	M	σ0	Mu	c.s.	Verifica
SLV 16	3.33	-36003	7179.13	43306	34506.56	4.807	Si
SLV 16	5	-31340	2492.99	37696	32172.8	12.905	Si
SLV 2	3.33	-33594	-1759.6	40408	33380.4	18.97	Si
SLV 2	5	-29950	135.33	36025	31354.69	231.685	Si
SLV 8	3.33	-34244	4345.7	41189	33700.58	7.755	Si
SLV 8	5	-25512	2999.98	30686	28362.67	9.454	Si
SLV 11	3.33	-34998	6535.75	42097	34057.33	5.211	Si
SLV 11	5	-26742	3370.48	32166	29249.51	8.678	Si
SLV 12	3.33	-34998	6535.75	42097	34057.33	5.211	Si
SLV 12	5	-26742	3370.48	32166	29249.51	8.678	Si
SLV 13	3.33	-36110	5540.55	43434	34552.54	6.236	Si
SLV 13	5	-34051	1370.35	40957	33606.82	24.524	Si
SLV 7	3.33	-34244	4345.7	41189	33700.58	7.755	Si
SLV 7	5	-25512	2999.98	30686	28362.67	9.454	Si
SLV 1	3.33	-33594	-1759.6	40408	33380.4	18.97	Si
SLV 1	5	-29950	135.33	36025	31354.69	231.685	Si
SLV 15	3.33	-36003	7179.13	43306	34506.56	4.807	Si
SLV 15	5	-31340	2492.99	37696	32172.8	12.905	Si
SLV 14	3.33	-36110	5540.55	43434	34552.54	6.236	Si
SLV 14	5	-34051	1370.35	40957	33606.82	24.524	Si

Verifica a taglio nel piano secondo D.M. 17-01-18 (N.T.C.) §7.8.2.2.2 con rottura per scorrimento in combinazioni non sismiche, γM = 3

Comb.	Quota	N	V par	M	σ0	σN	l'	fvd	Vt scorr.	Vt fess.diag.	Vt,lim	c.s.	Verifica
SLU 73	3.33	-49698	2517	4381.66		59778	2.9692	10833	9007			3.58	Si
SLU 73	5	-43765	1635	2151.28		52642	2.9692	10833	9007			5.51	Si
SLU 82	3.33	-51780	2242	4705.64		62282	2.9692	10833	9007			4.02	Si
SLU 82	5	-45775	1405	2431.79		55059	2.9692	10833	9007			6.41	Si
SLU 55	3.33	-45925	2365	3766.97		55240	2.9692	10833	9007			3.81	Si
SLU 55	5	-40338	1487	1785.97		48519	2.9692	10833	9007			6.06	Si
SLU 31	3.33	-41611	2293	3957.03		50050	2.9692	10833	9007			3.93	Si

Comb.	Quota	N	V par	M	σ0	σN	l'	fvd	Vt scorr.	Vt fess.diag.	Vt,lim	c.s.	Verifica
SLU 31	5	-36732	1493	1997.45		44182	2.9692	10833	9007			6.03	Si
SLU 65	3.33	-44770	2278	3523.36		53851	2.9692	10833	9007			3.95	Si
SLU 65	5	-39193	1597	1552.41		47143	2.9692	10833	9007			5.64	Si
SLU 52	3.33	-45195	2349	3647.28		54362	2.9692	10833	9007			3.83	Si
SLU 52	5	-39640	1464	1710.09		47680	2.9692	10833	9007			6.15	Si
SLU 34	3.33	-42341	2308	4076.73		50928	2.9692	10833	9007			3.9	Si
SLU 34	5	-37430	1516	2073.33		45021	2.9692	10833	9007			5.94	Si
SLU 76	3.33	-50428	2533	4501.36		60656	2.9692	10833	9007			3.56	Si
SLU 76	5	-44463	1658	2227.16		53482	2.9692	10833	9007			5.43	Si
SLU 68	3.33	-45500	2293	3643.06		54729	2.9692	10833	9007			3.93	Si
SLU 68	5	-39891	1620	1628.29		47982	2.9692	10833	9007			5.56	Si
SLU 84	3.33	-52510	2258	4825.34		63160	2.9692	10833	9007			3.99	Si
SLU 84	5	-46473	1428	2507.67		55899	2.9692	10833	9007			6.31	Si

Verifica a taglio nel piano secondo D.M. 17-01-18 (N.T.C.) §7.8.2.2.2 con rottura per scorrimento in combinazioni sismiche, γM = 2

Comb.	Quota	N	V par	M	σ0	σN	l'	fvd	Vt scorr.	Vt fess.diag.	Vt,lim	c.s.	Verifica
SLV 7	3.33	-34244	12046	4345.7		41189	2.9692	16250	13510			1.12	Si
SLV 7	5	-25512	7646	2999.98		30686	2.9692	14471	12030			1.57	Si
SLV 10	3.33	-35354	-9931	1073.83		42525	2.9692	16250	13510			1.36	Si
SLV 10	5	-35779	-6188	-371.66		43035	2.9692	16250	13510			2.18	Si
SLV 6	3.33	-34599	-10983	-1116.22		41617	2.9692	16250	13510			1.23	Si
SLV 6	5	-34548	-7896	-742.16		41556	2.9692	16250	13510			1.71	Si
SLV 12	3.33	-34998	13098	6535.75		42097	2.9692	16250	13510			1.03	Si
SLV 12	5	-26742	9354	3370.48		32166	2.9692	14766	12276			1.31	Si
SLV 5	3.33	-34599	-10983	-1116.22		41617	2.9692	16250	13510			1.23	Si
SLV 5	5	-34548	-7896	-742.16		41556	2.9692	16250	13510			1.71	Si
SLV 8	3.33	-34244	12046	4345.7		41189	2.9692	16250	13510			1.12	Si
SLV 8	5	-25512	7646	2999.98		30686	2.9692	14471	12030			1.57	Si
SLV 16	3.33	-36003	6265	7179.13		43306	2.9692	16250	13510			2.16	Si
SLV 16	5	-31340	5907	2492.99		37696	2.9692	15873	13196			2.23	Si
SLV 11	3.33	-34998	13098	6535.75		42097	2.9692	16250	13510			1.03	Si
SLV 11	5	-26742	9354	3370.48		32166	2.9692	14766	12276			1.31	Si
SLV 9	3.33	-35354	-9931	1073.83		42525	2.9692	16250	13510			1.36	Si
SLV 9	5	-35779	-6188	-371.66		43035	2.9692	16250	13510			2.18	Si
SLV 15	3.33	-36003	6265	7179.13		43306	2.9692	16250	13510			2.16	Si
SLV 15	5	-31340	5907	2492.99		37696	2.9692	15873	13196			2.23	Si

Verifica a pressoflessione fuori piano D.M. 17-01-18 (N.T.C.)

quota 4.165 Wa 0.05 denominatore 8 γM = 2

Comb.	fd	Sa	σ0	N	M	Mc	Coeff.s.	Verifica
SLV 4	143750	0.33	35051	-29140	154.74	2909.35	18.8	Si
SLV 3	143750	0.33	35051	-29140	154.74	2909.35	18.8	Si
SLV 7	143750	0.33	35381	-29415	154.74	2925.64	18.91	Si
SLV 8	143750	0.33	35381	-29415	154.74	2925.64	18.91	Si
SLV 2	143750	0.33	36875	-30657	154.74	2996.7	19.37	Si
SLV 1	143750	0.33	36875	-30657	154.74	2996.7	19.37	Si
SLV 11	143750	0.33	37488	-31167	154.74	3024.64	19.55	Si
SLV 12	143750	0.33	37488	-31167	154.74	3024.64	19.55	Si
SLV 6	143750	0.33	41462	-34470	154.74	3188.29	20.6	Si
SLV 5	143750	0.33	41462	-34470	154.74	3188.29	20.6	Si

Verifica dei meccanismi locali di collasso con analisi cinematica lineare

forza di aggancio al piano = 0 quota mezzeria = 4.165 Wa = 0.05 Ta = 0.0427

Comb.	N top	N base	V orto	α0	M*	e*	a0*	aLim	Verifica
SLV 4	-27239	-33488	109	0.052	3086.4	0.969	0.78249	5.13515	No
SLV 3	-27239	-33488	109	0.052	3086.4	0.969	0.78249	5.13515	No
SLV 13	-34051	-36110	-63	0.054	3780	0.974	0.79796	5.13515	No
SLV 14	-34051	-36110	-63	0.054	3780	0.974	0.79796	5.13515	No
SLV 8	-25512	-34244	168	0.05	2910.5	0.967	0.75176	4.796	No
SLV 7	-25512	-34244	168	0.05	2910.5	0.967	0.75176	4.796	No
SLV 1	-29950	-33594	31	0.055	3362.4	0.971	0.81746	5.13515	No
SLV 2	-29950	-33594	31	0.055	3362.4	0.971	0.81746	5.13515	No
SLV 12	-26742	-34998	140	0.051	3035.7	0.969	0.76695	4.796	No
SLV 11	-26742	-34998	140	0.051	3035.7	0.969	0.76695	4.796	No

Tabella dei coefficienti di sicurezza minimi

Stato limite	Coeff.s.	Comb.	Verifica
PF_SLU	3.629	SLU 84	Si
V_SLU	3.556	SLU 76	Si
PF_SLV	4.807	SLV 15	Si
V_SLV	1.031	SLV 11	Si
PFFP_SLV	18.802	SLV 3	Si
R_SLV	0.152	SLV 3	No

Maschio 71

Verifiche condotte secondo D.M. 17-01-18 (N.T.C.)

Dati geometrici

X ini.	Y ini.	X fin.	Y fin.	Quota i.	Quota.s	l	Sp.	h netta	h ini.	h fin.	a	a.s.,sx	a.s.,dx
-13.727	-0.354	-13.727	0	L3	L4	0.354	0.28	3.68	3.68	3.68			

Caratteristiche del materiale

(Circolare 7 21-01-19 C8.5.I) Muratura in mattoni pieni e malta di calce LC2_Corti

fb	fk	fvk0	fmedio	τ0	fv0	μ	ϕ	fv,lim	E	G	FC
600000			345000	9000	20000	0.58	0.77	32500	320000000	128000000	1.2

Verifica a pressoflessione nel piano secondo D.M. 17-01-18 NTC §7.8.2.2.1 in combinazioni non sismiche, γM = 3

Comb.	Quota	N	M	σ0	Mu	c.s.	Verifica
SLU 56	1.32	-9092	157.22	91773	0	0	No, Rottura per schiacciamento
SLU 56	3.42	-9034	275.24	91182	0	0	No, Rottura per schiacciamento
SLU 62	1.32	-9224	156.21	93103	0	0	No, Rottura per schiacciamento
SLU 62	3.42	-9200	278.27	92860	0	0	No, Rottura per schiacciamento
SLU 58	1.32	-9006	155.55	90904	0	0	No, Rottura per schiacciamento
SLU 58	3.42	-8942	272.11	90256	0	0	No, Rottura per schiacciamento
SLU 57	1.32	-9288	180.7	93750	0	0	No, Rottura per schiacciamento
SLU 57	3.42	-8906	250.36	89895	0	0	No, Rottura per schiacciamento
SLU 60	1.32	-9065	153.14	91498	0	0	No, Rottura per schiacciamento
SLU 60	3.42	-9023	270.74	91070	0	0	No, Rottura per schiacciamento
SLU 42	1.32	-8774	160.92	88561	0	0	No, Rottura per schiacciamento
SLU 42	3.42	-8646	254.09	87270	0	0	No, Rottura per schiacciamento
SLU 61	1.32	-9261	176.62	93475	0	0	No, Rottura per schiacciamento
SLU 61	3.42	-8895	245.86	89783	0	0	No, Rottura per schiacciamento
SLU 55	1.32	-9174	191.61	92593	0	0	No, Rottura per schiacciamento
SLU 55	3.42	-8552	223.1	86320	0	0	No, Rottura per schiacciamento
SLU 59	1.32	-9202	179.03	92881	0	0	No, Rottura per schiacciamento
SLU 59	3.42	-8815	247.22	88968	0	0	No, Rottura per schiacciamento
SLU 54	1.32	-9129	177.63	92145	0	0	No, Rottura per schiacciamento
SLU 54	3.42	-8729	242.83	88105	0	0	No, Rottura per schiacciamento

Verifica a pressoflessione nel piano secondo D.M. 17-01-18 NTC §7.8.2.2.1 in combinazioni sismiche, γM = 2

Comb.	Quota	N	M	σ0	Mu	c.s.	Verifica
SLV 10	1.32	-1876	-523.23	0	0	0	No, e>l/2
SLV 10	3.42	-9671	697.49	97609	344.16	0.493	No, M>Mu
SLV 13	1.32	-3540	-644.08	0	0	0	No, e>l/2
SLV 13	3.42	-9511	431.31	96000	360.65	0.836	No, M>Mu
SLV 11	1.32	-10489	381.56	105866	247.87	0.65	No, M>Mu
SLV 11	3.42	-4978	-235.42	50246	518.56	2.203	Si
SLV 12	1.32	-10489	381.56	105866	247.87	0.65	No, M>Mu
SLV 12	3.42	-4978	-235.42	50246	518.56	2.203	Si
SLV 7	1.32	-11646	756.58	117545	78.28	0.103	No, M>Mu
SLV 7	3.42	-3707	-287.15	37417	455.02	1.585	Si
SLV 3	1.32	-9981	877.42	100743	309.92	0.353	No, M>Mu
SLV 3	3.42	-3867	-20.97	39027	465.59	22.199	Si
SLV 14	1.32	-3540	-644.08	0	0	0	No, e>l/2
SLV 14	3.42	-9511	431.31	96000	360.65	0.836	No, M>Mu
SLV 9	1.32	-1876	-523.23	0	0	0	No, e>l/2
SLV 9	3.42	-9671	697.49	97609	344.16	0.493	No, M>Mu
SLV 8	1.32	-11646	756.58	117545	78.28	0.103	No, M>Mu
SLV 8	3.42	-3707	-287.15	37417	455.02	1.585	Si
SLV 4	1.32	-9981	877.42	100743	309.92	0.353	No, M>Mu
SLV 4	3.42	-3867	-20.97	39027	465.59	22.199	Si

Verifica a taglio nel piano secondo D.M. 17-01-18 (N.T.C.) §7.8.2.2.2 con rottura per scorrimento in combinazioni non sismiche, γM = 3

Comb.	Quota	N	V par	M	σ0	σN	l'	fvd	Vt scorr.	Vt fess.diag.	Vt,lim	c.s.	Verifica
SLU 77	1.32	-10007	322	168.06		101007	0.3538	10833	1073			3.34	Si
SLU 77	3.42	-10079	-2476	316.9		101733	0.3538	10833	1073			0.43	No, Vu<V
SLU 81	1.32	-9980	301	163.98		100732	0.3538	10833	1073			3.57	Si
SLU 81	3.42	-10068	-2449	312.4		101621	0.3538	10833	1073			0.44	No, Vu<V
SLU 74	1.32	-9848	315	164.99		99402	0.3538	10833	1073			3.41	Si
SLU 74	3.42	-9902	-2421	309.37		99943	0.3538	10833	1073			0.44	No, Vu<V
SLU 75	1.32	-10044	397	188.47		101379	0.3538	10833	1073			2.71	Si
SLU 75	3.42	-9774	-2257	284.48		98655	0.3538	10833	1073			0.48	No, Vu<V
SLU 82	1.32	-10176	382	187.46		102709	0.3538	10833	1073			2.81	Si
SLU 82	3.42	-9941	-2285	287.51		100333	0.3538	10833	1073			0.47	No, Vu<V
SLU 84	1.32	-10335	389	190.53		104314	0.3538	10833	1073			2.76	Si
SLU 84	3.42	-10118	-2340	295.04		102123	0.3538	10833	1073			0.46	No, Vu<V
SLU 79	1.32	-9921	318	166.39		100138	0.3538	10833	1073			3.38	Si
SLU 79	3.42	-9987	-2453	313.77		100806	0.3538	10833	1073			0.44	No, Vu<V
SLU 80	1.32	-10117	400	189.87		102114	0.3538	10833	1073			2.68	Si
SLU 80	3.42	-9860	-2289	288.88		99519	0.3538	10833	1073			0.47	No, Vu<V
SLU 83	1.32	-10139	307	167.05		102337	0.3538	10833	1073			3.49	Si
SLU 83	3.42	-10245	-2504	319.93		103411	0.3538	10833	1073			0.43	No, Vu<V
SLU 78	1.32	-10203	403	191.54		102984	0.3538	10833	1073			2.66	Si
SLU 78	3.42	-9952	-2312	292.01		100445	0.3538	10833	1073			0.46	No, Vu<V

Verifica a taglio nel piano secondo D.M. 17-01-18 (N.T.C.) §7.8.2.2.2 con rottura per scorrimento in combinazioni sismiche, γM = 2

Comb.	Quota	N	V par	M	σ0	σN	l'	fvd	Vt scorr.	Vt fess.diag.	Vt,lim	c.s.	Verifica

Comb.	Quota	N	V par	M	σ0	σN	l'	fvd	Vt scorr.	Vt fess.diag.	Vt,lim	c.s.	Verifica
SLV 3	1.32	-9981	1818	877.42		133489	0.267	16250	1215			0.67	No, Vu<V
SLV 3	3.42	-3867	-419	-20.97		39027	0.3538	16139	1599			3.82	Si
SLV 10	1.32	-1876	-1650	-523.23		0	0	8333	0			0	No, Vu<V
SLV 10	3.42	-9671	-4912	697.49		109857	0.3144	16250	1430			0.29	No, Vu<V
SLV 1	1.32	-7397	887	605.98		92696	0.285	16250	1297			1.46	Si
SLV 1	3.42	-5274	-2355	258.9		53235	0.3538	16250	1610			0.68	No, Vu<V
SLV 14	1.32	-3540	-1345	-644.08		0	0	8333	0			0	No, Vu<V
SLV 14	3.42	-9511	-2813	431.31		96000	0.3538	16250	1610			0.57	No, Vu<V
SLV 5	1.32	-3033	-980	-148.22		30610	0.3538	14455	1432			1.46	Si
SLV 5	3.42	-8400	-4774	645.76		99954	0.3001	16250	1366			0.29	No, Vu<V
SLV 4	1.32	-9981	1818	877.42		133489	0.267	16250	1215			0.67	No, Vu<V
SLV 4	3.42	-3867	-419	-20.97		39027	0.3538	16139	1599			3.82	Si
SLV 6	1.32	-3033	-980	-148.22		30610	0.3538	14455	1432			1.46	Si
SLV 6	3.42	-8400	-4774	645.76		99954	0.3001	16250	1366			0.29	No, Vu<V
SLV 2	1.32	-7397	887	605.98		92696	0.285	16250	1297			1.46	Si
SLV 2	3.42	-5274	-2355	258.9		53235	0.3538	16250	1610			0.68	No, Vu<V
SLV 9	1.32	-1876	-1650	-523.23		0	0	8333	0			0	No, Vu<V
SLV 9	3.42	-9671	-4912	697.49		109857	0.3144	16250	1430			0.29	No, Vu<V
SLV 13	1.32	-3540	-1345	-644.08		0	0	8333	0			0	No, Vu<V
SLV 13	3.42	-9511	-2813	431.31		96000	0.3538	16250	1610			0.57	No, Vu<V

Verifica a pressoflessione fuori piano D.M. 17-01-18 (N.T.C.)

quota 3.16 Wa 0.05 denominatore 8 γM = 2

Comb.	fd	Sa	σ0	N	M	Mc	Coeff.s.	Verifica
SLV 13	143750	0.31	92787	-9193	32.69	309.68	9.47	Si
SLV 14	143750	0.31	92787	-9193	32.69	309.68	9.47	Si
SLV 9	143750	0.31	91444	-9060	32.69	319.14	9.76	Si
SLV 10	143750	0.31	91444	-9060	32.69	319.14	9.76	Si
SLV 15	143750	0.31	82664	-8190	32.69	370.89	11.34	Si
SLV 16	143750	0.31	82664	-8190	32.69	370.89	11.34	Si
SLV 6	143750	0.31	80169	-7943	32.69	382.4	11.7	Si
SLV 5	143750	0.31	80169	-7943	32.69	382.4	11.7	Si
SLV 4	143750	0.31	45081	-4466	32.69	394.6	12.07	Si
SLV 3	143750	0.31	45081	-4466	32.69	394.6	12.07	Si

Verifica dei meccanismi locali di collasso con analisi cinematica lineare

forza di aggancio al piano = 0 quota mezzeria = 3.16 Wa = 0.05 Ta = 0.0808

Comb.	N top	N base	V orto	α0	M*	e*	a0*	aLim	Verifica
SLV 2	-2039	-7397	207	0	259.3	0.944	0	8.50261	No
SLV 10	-956	-1876	-64	0	150	0.913	0	7.42296	No
SLV 1	-2039	-7397	207	0	259.3	0.944	0	8.50261	No
SLV 9	-956	-1876	-64	0	150	0.913	0	7.42296	No
SLV 4	-3458	-9981	254	0	403.5	0.962	0	8.50261	No
SLV 3	-3458	-9981	254	0	403.5	0.962	0	8.50261	No
SLV 13	-2920	-3540	-127	0.003	348.7	0.957	0.04189	8.50261	No
SLV 14	-2920	-3540	-127	0.003	348.7	0.957	0.04189	8.50261	No
SLV 8	-5422	-11646	191	0.007	603.4	0.974	0.10451	7.42296	No
SLV 7	-5422	-11646	191	0.007	603.4	0.974	0.10451	7.42296	No

Tabella dei coefficienti di sicurezza minimi

Stato limite	Coeff.s.	Comb.	Verifica
PF_SLU	0	SLU 31	No
V_SLU	0.429	SLU 83	No
PF_SLV	0	SLV 9	No
V_SLV	0	SLV 9	No
PFFP_SLV	9.472	SLV 13	Si
R_SLV	0	SLV 1	No

Maschio 72

Verifiche condotte secondo D.M. 17-01-18 (N.T.C.)

Dati geometrici

X ini.	Y ini.	X fin.	Y fin.	Quota i.	Quota.s	l	Sp.	h netta	h ini.	h fin.	a	a.s.,sx	a.s.,dx
-19.663	6.64	-17.793	6.64	L3	L4	1.87	0.28	3.68	3.68	3.68			

Caratteristiche del materiale

(Circolare 7 21-01-19 C8.5.I) Muratura in mattoni pieni e malta di calce LC2_Corti

fb	fk	fvk0	fmedio	τ0	fv0	μ	ϕ	fv,lim	E	G	FC
600000			345000	9000	20000	0.58	0.77	32500	320000000	128000000	1.2

Verifica a pressoflessione nel piano secondo D.M. 17-01-18 NTC §7.8.2.2.1 in combinazioni non sismiche, γM = 3

Comb.	Quota	N	M	σ0	Mu	c.s.	Verifica
SLU 83	2.22	-22846	-3572	43636	9917.5	2.776	Si
SLU 83	4.12	-27074	-158.58	51711	9243.65	58.29	Si
SLU 78	2.22	-22538	-3528.75	43048	9935.98	2.816	Si
SLU 78	4.12	-26613	-195.61	50831	9355.1	47.825	Si
SLU 80	2.22	-22354	-3501.45	42696	9945.04	2.84	Si
SLU 80	4.12	-26379	-195.28	50383	9408.23	48.179	Si
SLU 81	2.22	-22433	-3512.65	42847	9941.33	2.83	Si
SLU 81	4.12	-26549	-151.78	50709	9369.86	61.735	Si
SLU 74	2.22	-22124	-3469.42	42257	9954.26	2.869	Si
SLU 74	4.12	-26095	-189.58	49842	9469.28	49.949	Si
SLU 75	2.22	-22125	-3469.41	42259	9954.23	2.869	Si
SLU 75	4.12	-26088	-188.8	49829	9470.71	50.161	Si
SLU 79	2.22	-22353	-3501.46	42695	9945.07	2.84	Si

Comb.	Quota	N	M	σ0	Mu	c.s.	Verifica
SLU 79	4.12	-26386	-196.05	50396	9406.71	47.981	Si
SLU 82	2.22	-22434	-3512.64	42849	9941.29	2.83	Si
SLU 82	4.12	-26542	-151	50695	9371.44	62.061	Si
SLU 84	2.22	-22847	-3571.99	43638	9917.45	2.776	Si
SLU 84	4.12	-27067	-157.81	51697	9245.39	58.586	Si
SLU 77	2.22	-22537	-3528.76	43046	9936.03	2.816	Si
SLU 77	4.12	-26620	-196.38	50844	9353.5	47.629	Si

Verifica a pressoflessione nel piano secondo D.M. 17-01-18 NTC §7.8.2.2.1 in combinazioni sismiche, γM = 2

Comb.	Quota	N	M	σ0	Mu	c.s.	Verifica
SLV 1	2.22	-11751	-7871.09	22444	8968.06	1.139	Si
SLV 1	4.12	-24117	4915.05	46064	14047.49	2.858	Si
SLV 13	2.22	-11499	2679.17	21963	8818.37	3.291	Si
SLV 13	4.12	-5920	-5807.48	0	0	0	No, e>l/2
SLV 2	2.22	-11751	-7871.09	22444	8968.06	1.139	Si
SLV 2	4.12	-24117	4915.05	46064	14047.49	2.858	Si
SLV 3	2.22	-18644	-7456.73	35610	12350.88	1.656	Si
SLV 3	4.12	-29111	5437.28	55603	14831.64	2.728	Si
SLV 6	2.22	-3620	-4661.91	0	0	0	No, e>l/2
SLV 6	4.12	-11922	552.9	22771	9068.86	16.402	Si
SLV 4	2.22	-18644	-7456.73	35610	12350.88	1.656	Si
SLV 4	4.12	-29111	5437.28	55603	14831.64	2.728	Si
SLV 14	2.22	-11499	2679.17	21963	8818.37	3.291	Si
SLV 14	4.12	-5920	-5807.48	0	0	0	No, e>l/2
SLV 15	2.22	-18393	3093.53	35130	12251.86	3.96	Si
SLV 15	4.12	-10914	-5285.25	20845	8462.79	1.601	Si
SLV 5	2.22	-3620	-4661.91	0	0	0	No, e>l/2
SLV 5	4.12	-11922	552.9	22771	9068.86	16.402	Si
SLV 16	2.22	-18393	3093.53	35130	12251.86	3.96	Si
SLV 16	4.12	-10914	-5285.25	20845	8462.79	1.601	Si

Verifica a taglio nel piano secondo D.M. 17-01-18 (N.T.C.) §7.8.2.2.2 con rottura per scorrimento in combinazioni non sismiche, γM = 3

Comb.	Quota	N	V par	M	σ0	σN	l'	fvd	Vt scorr.	Vt fess.diag.	Vt,lim	c.s.	Verifica
SLU 84	2.22	-22847	-5036	-3571.99		43638	1.8699	10833	5672			1.13	Si
SLU 84	4.12	-27067	-5076	-157.81		51697	1.8699	10833	5672			1.12	Si
SLU 80	2.22	-22354	-4883	-3501.45		42696	1.8699	10833	5672			1.16	Si
SLU 80	4.12	-26379	-4923	-195.28		50383	1.8699	10833	5672			1.15	Si
SLU 83	2.22	-22846	-5039	-3572		43636	1.8699	10833	5672			1.13	Si
SLU 83	4.12	-27074	-5081	-158.58		51711	1.8699	10833	5672			1.12	Si
SLU 78	2.22	-22538	-4922	-3528.75		43048	1.8699	10833	5672			1.15	Si
SLU 78	4.12	-26613	-4962	-195.61		50831	1.8699	10833	5672			1.14	Si
SLU 82	2.22	-22434	-4954	-3512.64		42849	1.8699	10833	5672			1.14	Si
SLU 82	4.12	-26542	-4993	-151		50695	1.8699	10833	5672			1.14	Si
SLU 74	2.22	-22124	-4842	-3469.42		42257	1.8699	10833	5672			1.17	Si
SLU 74	4.12	-26095	-4883	-189.58		49842	1.8699	10833	5672			1.16	Si
SLU 79	2.22	-22353	-4886	-3501.46		42695	1.8699	10833	5672			1.16	Si
SLU 79	4.12	-26386	-4927	-196.05		50396	1.8699	10833	5672			1.15	Si
SLU 75	2.22	-22125	-4840	-3469.41		42259	1.8699	10833	5672			1.17	Si
SLU 75	4.12	-26088	-4879	-188.8		49829	1.8699	10833	5672			1.16	Si
SLU 77	2.22	-22537	-4925	-3528.76		43046	1.8699	10833	5672			1.15	Si
SLU 77	4.12	-26620	-4966	-196.38		50844	1.8699	10833	5672			1.14	Si
SLU 81	2.22	-22433	-4956	-3512.65		42847	1.8699	10833	5672			1.14	Si
SLU 81	4.12	-26549	-4997	-151.78		50709	1.8699	10833	5672			1.13	Si

Verifica a taglio nel piano secondo D.M. 17-01-18 (N.T.C.) §7.8.2.2.2 con rottura per scorrimento in combinazioni sismiche, γM = 2

Comb.	Quota	N	V par	M	σ0	σN	l'	fvd	Vt scorr.	Vt fess.diag.	Vt,lim	c.s.	Verifica
SLV 2	2.22	-11751	-13714	-7871.09		52771	0.7953	16250	3618			0.26	No, Vu<V
SLV 2	4.12	-24117	-13350	4915.05		46064	1.8699	16250	8508			0.64	No, Vu<V
SLV 5	2.22	-3620	-8485	-4661.91		0	0	8333	0			0	No, Vu<V
SLV 5	4.12	-11922	-6886	552.9		22771	1.8699	12887	6747			0.98	No, Vu<V
SLV 1	2.22	-11751	-13714	-7871.09		52771	0.7953	16250	3618			0.26	No, Vu<V
SLV 1	4.12	-24117	-13350	4915.05		46064	1.8699	16250	8508			0.64	No, Vu<V
SLV 14	2.22	-11499	5827	2679.17		21963	1.8699	12726	6663			1.14	Si
SLV 14	4.12	-5920	6401	-5807.48		0	0	8333	0			0	No, Vu<V
SLV 3	2.22	-18644	-12334	-7456.73		41488	1.6049	16250	7302			0.59	No, Vu<V
SLV 3	4.12	-29111	-12965	5437.28		55603	1.8699	16250	8508			0.66	No, Vu<V
SLV 6	2.22	-3620	-8485	-4661.91		0	0	8333	0			0	No, Vu<V
SLV 6	4.12	-11922	-6886	552.9		22771	1.8699	12887	6747			0.98	No, Vu<V
SLV 16	2.22	-18393	7207	3093.53		35130	1.8699	15359	8042			1.12	Si
SLV 16	4.12	-10914	6786	-5285.25		28830	1.352	14099	5337			0.79	No, Vu<V
SLV 13	2.22	-11499	5827	2679.17		21963	1.8699	12726	6663			1.14	Si
SLV 13	4.12	-5920	6401	-5807.48		0	0	8333	0			0	No, Vu<V
SLV 4	2.22	-18644	-12334	-7456.73		41488	1.6049	16250	7302			0.59	No, Vu<V
SLV 4	4.12	-29111	-12965	5437.28		55603	1.8699	16250	8508			0.66	No, Vu<V
SLV 15	2.22	-18393	7207	3093.53		35130	1.8699	15359	8042			1.12	Si
SLV 15	4.12	-10914	6786	-5285.25		28830	1.352	14099	5337			0.79	No, Vu<V

Verifica a pressoflessione fuori piano D.M. 17-01-18 (N.T.C.)

quota 3.16 Wa 0.05 denominatore 8 γM = 2

Comb.	fd	Sa	σ0	N	M	Mc	Coeff.s.	Verifica
SLV 9	143750	0.31	10973	-5745	168.84	732.06	4.34	Si
SLV 10	143750	0.31	10973	-5745	168.84	732.06	4.34	Si
SLV 13	143750	0.31	16572	-8677	168.84	1049.98	6.22	Si
SLV 14	143750	0.31	16572	-8677	168.84	1049.98	6.22	Si
SLV 5	143750	0.31	17511	-9168	168.84	1099.56	6.51	Si
SLV 6	143750	0.31	17511	-9168	168.84	1099.56	6.51	Si
SLV 15	143750	0.31	27910	-14613	168.84	1578.47	9.35	Si
SLV 16	143750	0.31	27910	-14613	168.84	1578.47	9.35	Si
SLV 1	143750	0.31	38365	-20087	168.84	1929.15	11.43	Si

Comb.	fd	Sa	σ0	N	M	Mc	Coeff.s.	Verifica
SLV 2	143750	0.31	38365	-20087	168.84	1929.15	11.43	Si

Verifica dei meccanismi locali di collasso con analisi cinematica lineare

forza di aggancio al piano = 0 quota mezzeria = 3.16 Wa = 0.05 Ta = 0.0808

Comb.	N top	N base	V orto	α0	M*	e*	a0*	aLim	Verifica
SLV 10	-8507	-1877	-125	0.032	1140.5	0.934	0.50247	7.42296	No
SLV 9	-8507	-1877	-125	0.032	1140.5	0.934	0.50247	7.42296	No
SLV 3	-20948	-17603	50	0.039	2404.1	0.966	0.58292	8.50261	No
SLV 4	-20948	-17603	50	0.039	2404.1	0.966	0.58292	8.50261	No
SLV 6	-10897	-3435	-117	0.034	1382.5	0.944	0.52354	7.42296	No
SLV 5	-10897	-3435	-117	0.034	1382.5	0.944	0.52354	7.42296	No
SLV 2	-17597	-11903	-23	0.04	2063	0.961	0.60929	8.50261	No
SLV 1	-17597	-11903	-23	0.04	2063	0.961	0.60929	8.50261	No
SLV 8	-22070	-22435	126	0.036	2518.2	0.967	0.53367	7.42296	No
SLV 7	-22070	-22435	126	0.036	2518.2	0.967	0.53367	7.42296	No

Tabella dei coefficienti di sicurezza minimi

Stato limite	Coeff.s.	Comb.	Verifica
PF_SLU	2.776	SLU 84	Si
V_SLU	1.116	SLU 83	Si
PF_SLV	0	SLV 5	No
V_SLV	0	SLV 5	No
PFFP_SLV	4.336	SLV 9	Si
R_SLV	0.068	SLV 9	No

Maschio 73

Verifiche condotte secondo D.M. 17-01-18 (N.T.C.)

Dati geometrici

X ini.	Y ini.	X fin.	Y fin.	Quota i.	Quota.s	l	Sp.	h netta	h ini.	h fin.	a	a.s.,sx	a.s.,dx
-16.793	6.64	-12.868	6.64	L3	L4	3.925	0.28	3.68	3.68	3.68			

Caratteristiche del materiale

(Circolare 7 21-01-19 C8.5.I) Muratura in mattoni pieni e malta di calce LC2_Corti

fb	fk	fvk0	fmedio	τ0	fv0	μ	ϕ	fv,lim	E	G	FC
600000			345000	9000	20000	0.58	0.77	32500	320000000	128000000	1.2

Verifica a pressoflessione nel piano secondo D.M. 17-01-18 NTC §7.8.2.2.1 in combinazioni non sismiche, γM = 3

Comb.	Quota	N	M	σ0	Mu	c.s.	Verifica
SLU 77	2.22	-53120	-4523.11	48335	42390.32	9.372	Si
SLU 77	4.12	-48553	-4426.4	44180	43606.83	9.852	Si
SLU 80	2.22	-52681	-4480.53	47935	42547.11	9.496	Si
SLU 80	4.12	-48120	-4408.32	43785	43674.76	9.907	Si
SLU 84	2.22	-53934	-4580.76	49076	42077.5	9.186	Si
SLU 84	4.12	-49410	-4547.95	44959	43448.38	9.553	Si
SLU 81	2.22	-53005	-4506.16	48231	42432.14	9.416	Si
SLU 81	4.12	-48469	-4459.08	44103	43620.62	9.782	Si
SLU 78	2.22	-53129	-4521.5	48343	42387.08	9.375	Si
SLU 78	4.12	-48563	-4423.08	44189	43605.18	9.859	Si
SLU 79	2.22	-52672	-4482.15	47927	42550.17	9.493	Si
SLU 79	4.12	-48110	-4411.64	43776	43676.22	9.9	Si
SLU 83	2.22	-53925	-4582.37	49068	42081.05	9.183	Si
SLU 83	4.12	-49400	-4551.27	44950	43450.39	9.547	Si
SLU 74	2.22	-52200	-4446.9	47498	42708.94	9.604	Si
SLU 74	4.12	-47623	-4334.21	43333	43742.53	10.092	Si
SLU 82	2.22	-53014	-4504.54	48239	42428.95	9.419	Si
SLU 82	4.12	-48479	-4455.76	44112	43619.01	9.789	Si
SLU 75	2.22	-52209	-4445.29	47506	42706.06	9.607	Si
SLU 75	4.12	-47633	-4330.89	43342	43741.29	10.1	Si

Verifica a pressoflessione nel piano secondo D.M. 17-01-18 NTC §7.8.2.2.1 in combinazioni sismiche, γM = 2

Comb.	Quota	N	M	σ0	Mu	c.s.	Verifica
SLV 4	2.22	-48074	-23249.06	43743	60569.11	2.605	Si
SLV 4	4.12	-40175	15373.34	36556	55255.02	3.594	Si
SLV 1	2.22	-32284	-22298.32	29376	48125.56	2.158	Si
SLV 1	4.12	-32063	15477.24	29175	47899.63	3.095	Si
SLV 3	2.22	-48074	-23249.06	43743	60569.11	2.605	Si
SLV 3	4.12	-40175	15373.34	36556	55255.02	3.594	Si
SLV 15	2.22	-38804	16220.24	35308	54146.68	3.338	Si
SLV 15	4.12	-31869	-21233.35	28998	47699.71	2.246	Si
SLV 16	2.22	-38804	16220.24	35308	54146.68	3.338	Si
SLV 16	4.12	-31869	-21233.35	28998	47699.71	2.246	Si
SLV 6	2.22	-10619	-7374.87	9663	19192.07	2.602	Si
SLV 6	4.12	-19693	2786.11	17919	32979.21	11.837	Si
SLV 5	2.22	-10619	-7374.87	9663	19192.07	2.602	Si
SLV 5	4.12	-19693	2786.11	17919	32979.21	11.837	Si
SLV 13	2.22	-23014	17170.98	20941	37425.06	2.18	Si
SLV 13	4.12	-23757	-21129.45	21617	38374.99	1.816	Si
SLV 2	2.22	-32284	-22298.32	29376	48125.56	2.158	Si
SLV 2	4.12	-32063	15477.24	29175	47899.63	3.095	Si
SLV 14	2.22	-23014	17170.98	20941	37425.06	2.18	Si
SLV 14	4.12	-23757	-21129.45	21617	38374.99	1.816	Si

Verifica a taglio nel piano secondo D.M. 17-01-18 (N.T.C.) §7.8.2.2.2 con rottura per scorrimento in combinazioni non sismiche, γM = 3

Comb.	Quota	N	V par	M	σ0	σN	l'	fvd	Vt scorr.	Vt fess.diag.	Vt,lim	c.s.	Verifica

Comb.	Quota	N	V par	M	σ0	σN	l'	fvd	Vt scorr.	Vt fess.diag.	Vt,lim	c.s.	Verifica
SLU 50	2.22	-42570	-162	-3649.82		38736	3.925	10720	11782			72.95	Si
SLU 50	4.12	-37900	-197	-3360.5		34485	3.925	10154	11159			56.59	Si
SLU 46	2.22	-42107	-183	-3612.96		38314	3.925	10664	11720			63.95	Si
SLU 46	4.12	-37422	-219	-3279.75		34051	3.925	10096	11095			50.76	Si
SLU 4	2.22	-34035	-131	-2916.81		30969	3.925	9685	10644			81.17	Si
SLU 4	4.12	-30432	-160	-2681.36		27691	3.925	9248	10163			63.63	Si
SLU 44	2.22	-40745	-179	-3494.71		37075	3.925	10499	11538			64.64	Si
SLU 44	4.12	-36055	-213	-3170.58		32807	3.925	9930	10913			51.32	Si
SLU 47	2.22	-41665	-171	-3570.92		37912	3.925	10610	11661			68.24	Si
SLU 47	4.12	-36986	-206	-3262.77		33654	3.925	10043	11037			53.64	Si
SLU 43	2.22	-40730	-177	-3497.39		37061	3.925	10497	11536			65.26	Si
SLU 43	4.12	-36039	-211	-3176.12		32792	3.925	9928	10911			51.72	Si
SLU 45	2.22	-42099	-182	-3614.58		38306	3.925	10663	11719			64.3	Si
SLU 45	4.12	-37412	-218	-3283.07		34042	3.925	10095	11094			50.98	Si
SLU 49	2.22	-43027	-176	-3689.18		39151	3.925	10776	11843			67.42	Si
SLU 49	4.12	-38353	-212	-3371.94		34898	3.925	10209	11219			52.99	Si
SLU 48	2.22	-43019	-175	-3690.79		39143	3.925	10775	11841			67.82	Si
SLU 48	4.12	-38343	-211	-3375.26		34889	3.925	10207	11218			53.24	Si
SLU 51	2.22	-42579	-163	-3648.21		38744	3.925	10721	11783			72.49	Si
SLU 51	4.12	-37909	-198	-3357.17		34494	3.925	10155	11160			56.31	Si

Verifica a taglio nel piano secondo D.M. 17-01-18 (N.T.C.) §7.8.2.2.2 con rottura per scorrimento in combinazioni sismiche, γM = 2

Comb.	Quota	N	V par	M	σ0	σN	l'	fvd	Vt scorr.	Vt fess.diag.	Vt,lim	c.s.	Verifica
SLV 13	2.22	-23014	19101	17170.98		22524	3.6492	12838	13118			0.69	No, Vu<V
SLV 13	4.12	-23757	20044	-21129.45		26356	3.2193	13604	12263			0.61	No, Vu<V
SLV 2	2.22	-32284	-21713	-22298.32		30220	3.8154	14377	15360			0.71	No, Vu<V
SLV 2	4.12	-32063	-21033	15477.24		29175	3.925	14168	15571			0.74	No, Vu<V
SLV 16	2.22	-38804	21522	16220.24		35308	3.925	15395	16919			0.79	No, Vu<V
SLV 16	4.12	-31869	20782	-21233.35		29269	3.8887	14187	15447			0.74	No, Vu<V
SLV 15	2.22	-38804	21522	16220.24		35308	3.925	15395	16919			0.79	No, Vu<V
SLV 15	4.12	-31869	20782	-21233.35		29269	3.8887	14187	15447			0.74	No, Vu<V
SLV 14	2.22	-23014	19101	17170.98		22524	3.6492	12838	13118			0.69	No, Vu<V
SLV 14	4.12	-23757	20044	-21129.45		26356	3.2193	13604	12263			0.61	No, Vu<V
SLV 3	2.22	-48074	-19292	-23249.06		43743	3.925	16250	17859			0.93	No, Vu<V
SLV 3	4.12	-40175	-20296	15373.34		36556	3.925	15645	17193			0.85	No, Vu<V
SLV 6	2.22	-10619	-10253	-7374.87		9970	3.804	10327	11000			1.07	Si
SLV 6	4.12	-19693	-7517	2786.11		17919	3.925	11917	13097			1.74	Si
SLV 5	2.22	-10619	-10253	-7374.87		9970	3.804	10327	11000			1.07	Si
SLV 5	4.12	-19693	-7517	2786.11		17919	3.925	11917	13097			1.74	Si
SLV 4	2.22	-48074	-19292	-23249.06		43743	3.925	16250	17859			0.93	No, Vu<V
SLV 4	4.12	-40175	-20296	15373.34		36556	3.925	15645	17193			0.85	No, Vu<V
SLV 1	2.22	-32284	-21713	-22298.32		30220	3.8154	14377	15360			0.71	No, Vu<V
SLV 1	4.12	-32063	-21033	15477.24		29175	3.925	14168	15571			0.74	No, Vu<V

Verifica a pressoflessione fuori piano D.M. 17-01-18 (N.T.C.)

quota 3.16 Wa 0.05 denominatore 8 γM = 2

Comb.	fd	Sa	σ0	N	M	Mc	Coeff.s.	Verifica
SLV 9	143750	0.31	13124	-14424	354.4	1802.42	5.09	Si
SLV 10	143750	0.31	13124	-14424	354.4	1802.42	5.09	Si
SLV 6	143750	0.31	15656	-17206	354.4	2100.17	5.93	Si
SLV 5	143750	0.31	15656	-17206	354.4	2100.17	5.93	Si
SLV 13	143750	0.31	21739	-23891	354.4	2749.65	7.76	Si
SLV 14	143750	0.31	21739	-23891	354.4	2749.65	7.76	Si
SLV 2	143750	0.31	30177	-33164	354.4	3496.33	9.87	Si
SLV 1	143750	0.31	30177	-33164	354.4	3496.33	9.87	Si
SLV 15	143750	0.31	31654	-34788	354.4	3608.58	10.18	Si
SLV 16	143750	0.31	31654	-34788	354.4	3608.58	10.18	Si

Verifica dei meccanismi locali di collasso con analisi cinematica lineare

forza di aggancio al piano = 0 quota mezzeria = 3.16 Wa = 0.05 Ta = 0.0808

Comb.	N top	N base	V orto	α0	M*	e*	a0*	aLim	Verifica
SLV 3	-33770	-43821	75	0.04	4008.4	0.958	0.6031	8.50261	No
SLV 4	-33770	-43821	75	0.04	4008.4	0.958	0.6031	8.50261	No
SLV 10	-16563	-6201	-217	0.034	2263.3	0.931	0.53312	7.42296	No
SLV 9	-16563	-6201	-217	0.034	2263.3	0.931	0.53312	7.42296	No
SLV 5	-18667	-7442	-215	0.035	2475.9	0.936	0.53725	7.42296	No
SLV 6	-18667	-7442	-215	0.035	2475.9	0.936	0.53725	7.42296	No
SLV 16	-26756	-39684	69	0.04	3295.8	0.95	0.61713	8.50261	No
SLV 15	-26756	-39684	69	0.04	3295.8	0.95	0.61713	8.50261	No
SLV 2	-27932	-27699	-58	0.041	3415.2	0.951	0.61991	8.50261	No
SLV 1	-27932	-27699	-58	0.041	3415.2	0.951	0.61991	8.50261	No

Tabella dei coefficienti di sicurezza minimi

Stato limite	Coeff.s.	Comb.	Verifica
PF_SLU	9.183	SLU 83	Si
V_SLU	50.755	SLU 46	Si
PF_SLV	1.816	SLV 13	Si
V_SLV	0.612	SLV 13	No
PFFP_SLV	5.086	SLV 9	Si
R_SLV	0.071	SLV 3	No

Maschio 74

Verifiche condotte secondo D.M. 17-01-18 (N.T.C.)

Dati geometrici

X ini.	Y ini.	X fin.	Y fin.	Quota i.	Quota.s	l	Sp.	h netta	h ini.	h fin.	a	a.s.,sx	a.s.,dx
-11.868	6.64	-7.943	6.64	L3	L4	3.925	0.28	3.68	3.68	3.68			

Caratteristiche del materiale

(Circolare 7 21-01-19 C8.5.I) Muratura in mattoni pieni e malta di calce LC2_Corti

fb	fk	fvk0	fmedio	τ0	fv0	μ	ϕ	fv,lim	E	G	FC
600000			345000	9000	20000	0.58	0.77	32500	320000000	128000000	1.2

Verifica a pressoflessione nel piano secondo D.M. 17-01-18 NTC §7.8.2.2.1 in combinazioni non sismiche, γM = 3

Comb.	Quota	N	M	σ0	Mu	c.s.	Verifica
SLU 83	2.22	-50782	3290.87	46208	43127.4	13.105	Si
SLU 83	4.12	-53153	1897.11	48365	42378.29	22.338	Si
SLU 75	2.22	-49195	3186.91	44763	43491.14	13.647	Si
SLU 75	4.12	-51287	1789.17	46667	42988.61	24.027	Si
SLU 77	2.22	-49938	3267.99	45440	43334.5	13.26	Si
SLU 77	4.12	-52142	1700.32	47445	42727.98	25.129	Si
SLU 79	2.22	-49491	3239.46	45032	43431.76	13.407	Si
SLU 79	4.12	-51642	1679.98	46990	42884.33	25.527	Si
SLU 78	2.22	-49958	3270.95	45457	43330.15	13.247	Si
SLU 78	4.12	-52162	1702.56	47463	42721.34	25.092	Si
SLU 82	2.22	-50039	3209.79	45531	43311.54	13.494	Si
SLU 82	4.12	-52298	1985.96	47587	42676.84	21.489	Si
SLU 81	2.22	-50020	3206.83	45514	43315.95	13.507	Si
SLU 81	4.12	-52278	1983.73	47568	42683.59	21.517	Si
SLU 80	2.22	-49510	3242.42	45050	43427.8	13.394	Si
SLU 80	4.12	-51662	1682.22	47008	42878.14	25.489	Si
SLU 84	2.22	-50801	3293.83	46225	43122.35	13.092	Si
SLU 84	4.12	-53174	1899.35	48384	42370.75	22.308	Si
SLU 74	2.22	-49176	3183.95	44746	43494.85	13.661	Si
SLU 74	4.12	-51266	1786.93	46648	42994.46	24.06	Si

Verifica a pressoflessione nel piano secondo D.M. 17-01-18 NTC §7.8.2.2.1 in combinazioni sismiche, γM = 2

Comb.	Quota	N	M	σ0	Mu	c.s.	Verifica
SLV 1	2.22	-21710	-16365.06	19754	35717.75	2.183	Si
SLV 1	4.12	-25155	18101.16	22889	40119.34	2.216	Si
SLV 2	2.22	-21710	-16365.06	19754	35717.75	2.183	Si
SLV 2	4.12	-25155	18101.16	22889	40119.34	2.216	Si
SLV 13	2.22	-29345	20958.12	26701	45004.18	2.147	Si
SLV 13	4.12	-34753	-15847.11	31622	50551.48	3.19	Si
SLV 4	2.22	-37740	-16681.44	34341	53249.45	3.192	Si
SLV 4	4.12	-34257	18301.91	31171	50078.47	2.736	Si
SLV 16	2.22	-45375	20641.74	41288	58958.66	2.856	Si
SLV 16	4.12	-43854	-15646.36	39904	57957.39	3.704	Si
SLV 10	2.22	-7971	8264.12	7253	14713.7	1.78	Si
SLV 10	4.12	-20775	-4199.42	18904	34463.42	8.207	Si
SLV 9	2.22	-7971	8264.12	7253	14713.7	1.78	Si
SLV 9	4.12	-20775	-4199.42	18904	34463.42	8.207	Si
SLV 3	2.22	-37740	-16681.44	34341	53249.45	3.192	Si
SLV 3	4.12	-34257	18301.91	31171	50078.47	2.736	Si
SLV 15	2.22	-45375	20641.74	41288	58958.66	2.856	Si
SLV 15	4.12	-43854	-15646.36	39904	57957.39	3.704	Si
SLV 14	2.22	-29345	20958.12	26701	45004.18	2.147	Si
SLV 14	4.12	-34753	-15847.11	31622	50551.48	3.19	Si

Verifica a taglio nel piano secondo D.M. 17-01-18 (N.T.C.) §7.8.2.2.2 con rottura per scorrimento in combinazioni non sismiche, γM = 3

Comb.	Quota	N	V par	M	σ0	σN	l'	fvd	Vt scorr.	Vt fess.diag.	Vt,lim	c.s.	Verifica
SLU 84	2.22	-50801	1471	3293.83		46225	3.925	10833	11906			8.09	Si
SLU 84	4.12	-53174	1460	1899.35		48384	3.925	10833	11906			8.15	Si
SLU 71	2.22	-44698	1455	2923.4		40671	3.925	10833	11906			8.18	Si
SLU 71	4.12	-46072	1446	1375.44		41922	3.925	10833	11906			8.24	Si
SLU 83	2.22	-50782	1471	3290.87		46208	3.925	10833	11906			8.1	Si
SLU 83	4.12	-53153	1460	1897.11		48365	3.925	10833	11906			8.16	Si
SLU 80	2.22	-49510	1537	3242.42		45050	3.925	10833	11906			7.75	Si
SLU 80	4.12	-51662	1526	1682.22		47008	3.925	10833	11906			7.8	Si
SLU 69	2.22	-45145	1465	2951.93		41079	3.925	10833	11906			8.13	Si
SLU 69	4.12	-46572	1455	1395.77		42377	3.925	10833	11906			8.18	Si
SLU 79	2.22	-49491	1536	3239.46		45032	3.925	10833	11906			7.75	Si
SLU 79	4.12	-51642	1526	1679.98		46990	3.925	10833	11906			7.8	Si
SLU 72	2.22	-44717	1456	2926.37		40689	3.925	10833	11906			8.18	Si
SLU 72	4.12	-46092	1446	1377.67		41940	3.925	10833	11906			8.23	Si
SLU 70	2.22	-45165	1465	2954.9		41096	3.925	10833	11906			8.13	Si
SLU 70	4.12	-46593	1455	1398.01		42395	3.925	10833	11906			8.18	Si
SLU 78	2.22	-49958	1546	3270.95		45457	3.925	10833	11906			7.7	Si
SLU 78	4.12	-52162	1536	1702.56		47463	3.925	10833	11906			7.75	Si
SLU 77	2.22	-49938	1546	3267.99		45440	3.925	10833	11906			7.7	Si
SLU 77	4.12	-52142	1535	1700.32		47445	3.925	10833	11906			7.76	Si

Verifica a taglio nel piano secondo D.M. 17-01-18 (N.T.C.) §7.8.2.2.2 con rottura per scorrimento in combinazioni sismiche, γM = 2

Comb.	Quota	N	V par	M	σ0	σN	l'	fvd	Vt scorr.	Vt fess.diag.	Vt,lim	c.s.	Verifica
SLV 13	2.22	-29345	21847	20958.12		27985	3.7449	13930	14607			0.67	No, Vu<V
SLV 13	4.12	-34753	20825	-15847.11		31622	3.925	14658	16109			0.77	No, Vu<V
SLV 4	2.22	-37740	-19923	-16681.44		34341	3.925	15201	16706			0.84	No, Vu<V
SLV 4	4.12	-34257	-18916	18301.91		31171	3.925	14568	16010			0.85	No, Vu<V
SLV 10	2.22	-7971	11151	8264.12		10251	2.777	10383	8074			0.72	No, Vu<V
SLV 10	4.12	-20775	7663	-4199.42		18904	3.925	12114	13313			1.74	Si
SLV 16	2.22	-45375	19259	20641.74		41288	3.925	16250	17859			0.93	No, Vu<V
SLV 16	4.12	-43854	20332	-15646.36		39904	3.925	16250	17859			0.88	No, Vu<V
SLV 9	2.22	-7971	11151	8264.12		10251	2.777	10383	8074			0.72	No, Vu<V

Comb.	Quota	N	V par	M	σ0	σN	l'	fvd	Vt scorr.	Vt fess.diag.	Vt,lim	c.s.	Verifica
SLV 9	4.12	-20775	7663	-4199.42		18904	3.925	12114	13313			1.74	Si
SLV 15	2.22	-45375	19259	20641.74		41288	3.925	16250	17859			0.93	No, Vu<V
SLV 15	4.12	-43854	20332	-15646.36		39904	3.925	16250	17859			0.88	No, Vu<V
SLV 1	2.22	-21710	-17336	-16365.06		21383	3.6261	12610	12803			0.74	No, Vu<V
SLV 1	4.12	-25155	-18423	18101.16		24094	3.7288	13152	13732			0.75	No, Vu<V
SLV 3	2.22	-37740	-19923	-16681.44		34341	3.925	15201	16706			0.84	No, Vu<V
SLV 3	4.12	-34257	-18916	18301.91		31171	3.925	14568	16010			0.85	No, Vu<V
SLV 14	2.22	-29345	21847	20958.12		27985	3.7449	13930	14607			0.67	No, Vu<V
SLV 14	4.12	-34753	20825	-15847.11		31622	3.925	14658	16109			0.77	No, Vu<V
SLV 2	2.22	-21710	-17336	-16365.06		21383	3.6261	12610	12803			0.74	No, Vu<V
SLV 2	4.12	-25155	-18423	18101.16		24094	3.7288	13152	13732			0.75	No, Vu<V

Verifica a pressoflessione fuori piano D.M. 17-01-18 (N.T.C.)

quota 3.16 Wa 0.05 denominatore 8 γM = 2

Comb.	fd	Sa	σ0	N	M	Mc	Coeff.s.	Verifica
SLV 6	143750	0.31	12791	-14058	354.4	1762.06	4.97	Si
SLV 5	143750	0.31	12791	-14058	354.4	1762.06	4.97	Si
SLV 10	143750	0.31	15390	-16914	354.4	2069.67	5.84	Si
SLV 9	143750	0.31	15390	-16914	354.4	2069.67	5.84	Si
SLV 2	143750	0.31	22300	-24508	354.4	2804.92	7.91	Si
SLV 1	143750	0.31	22300	-24508	354.4	2804.92	7.91	Si
SLV 13	143750	0.31	30963	-34028	354.4	3556.72	10.04	Si
SLV 14	143750	0.31	30963	-34028	354.4	3556.72	10.04	Si
SLV 3	143750	0.31	33050	-36322	354.4	3709.6	10.47	Si
SLV 4	143750	0.31	33050	-36322	354.4	3709.6	10.47	Si

Verifica dei meccanismi locali di collasso con analisi cinematica lineare

forza di aggancio al piano = 0 quota mezzeria = 3.16 Wa = 0.05 Ta = 0.0808

Comb.	N top	N base	V orto	α0	M*	e*	a0*	aLim	Verifica
SLV 16	-36110	-41332	51	0.04	4246.4	0.96	0.6093	8.50261	No
SLV 15	-36110	-41332	51	0.04	4246.4	0.96	0.6093	8.50261	No
SLV 14	-29542	-25429	-62	0.04	3578.8	0.953	0.6148	8.50261	No
SLV 13	-29542	-25429	-62	0.04	3578.8	0.953	0.6148	8.50261	No
SLV 4	-28576	-34982	58	0.041	3480.6	0.952	0.61874	8.50261	No
SLV 3	-28576	-34982	58	0.041	3480.6	0.952	0.61874	8.50261	No
SLV 10	-19243	-4652	-192	0.036	2534.2	0.937	0.55355	7.42296	No
SLV 9	-19243	-4652	-192	0.036	2534.2	0.937	0.55355	7.42296	No
SLV 6	-16983	-2747	-190	0.036	2305.7	0.932	0.55419	7.42296	No
SLV 5	-16983	-2747	-190	0.036	2305.7	0.932	0.55419	7.42296	No

Tabella dei coefficienti di sicurezza minimi

Stato limite	Coeff.s.	Comb.	Verifica
PF_SLU	13.092	SLU 84	Si
V_SLU	7.699	SLU 78	Si
PF_SLV	1.78	SLV 9	Si
V_SLV	0.669	SLV 13	No
PFFP_SLV	4.972	SLV 5	Si
R_SLV	0.072	SLV 15	No

Maschio 75

Verifiche condotte secondo D.M. 17-01-18 (N.T.C.)

Dati geometrici

X ini.	Y ini.	X fin.	Y fin.	Quota i.	Quota.s	l	Sp.	h netta	h ini.	h fin.	a	a.s.,sx	a.s.,dx
-6.943	6.64	-5.088	6.64	L3	L4	1.855	0.28	3.68	3.68	3.68			

Caratteristiche del materiale

(Circolare 7 21-01-19 C8.5.I) Muratura in mattoni pieni e malta di calce LC2_Corti

fb	fk	fvk0	fmedio	τ0	fv0	μ	ϕ	fv,lim	E	G	FC
600000			345000	9000	20000	0.58	0.77	32500	320000000	128000000	1.2

Verifica a pressoflessione nel piano secondo D.M. 17-01-18 NTC §7.8.2.2.1 in combinazioni non sismiche, γM = 3

Comb.	Quota	N	M	σ0	Mu	c.s.	Verifica
SLU 83	2.22	-17749	1951.28	34164	9559.71	4.899	Si
SLU 83	4.12	-21695	-220.04	41761	9808.38	44.575	Si
SLU 84	2.22	-17762	1953.2	34190	9561.67	4.895	Si
SLU 84	4.12	-21705	-218.07	41781	9808.14	44.976	Si
SLU 77	2.22	-17389	1926.07	33471	9503.04	4.934	Si
SLU 77	4.12	-21203	-208.48	40813	9814.64	47.078	Si
SLU 75	2.22	-17204	1894.19	33116	9471.77	5	Si
SLU 75	4.12	-20913	-167.11	40255	9813.35	58.722	Si
SLU 81	2.22	-17551	1917.48	33784	9529.27	4.97	Si
SLU 81	4.12	-21396	-180.65	41184	9813.46	54.324	Si
SLU 82	2.22	-17564	1919.4	33809	9531.35	4.966	Si
SLU 82	4.12	-21406	-178.68	41203	9813.35	54.921	Si
SLU 74	2.22	-17191	1892.27	33091	9469.48	5.004	Si
SLU 74	4.12	-20903	-169.08	40236	9813.24	58.039	Si
SLU 80	2.22	-17230	1911.88	33166	9476.25	4.957	Si
SLU 80	4.12	-20989	-209.89	40402	9814.05	46.758	Si
SLU 79	2.22	-17217	1909.95	33141	9473.97	4.96	Si
SLU 79	4.12	-20979	-211.86	40383	9813.97	46.324	Si
SLU 78	2.22	-17402	1927.99	33497	9505.21	4.93	Si
SLU 78	4.12	-21213	-206.51	40832	9814.62	47.526	Si

Verifica a pressoflessione nel piano secondo D.M. 17-01-18 NTC §7.8.2.2.1 in combinazioni sismiche, γM = 2

Comb.	Quota	N	M	σ0	Mu	c.s.	Verifica
SLV 15	2.22	-16362	6612.35	31495	11266.47	1.704	Si
SLV 15	4.12	-22183	-6296.33	42700	13387.47	2.126	Si
SLV 14	2.22	-10070	7072.53	19383	7859.68	1.111	Si
SLV 14	4.12	-17463	-6186.65	33615	11743.75	1.898	Si
SLV 16	2.22	-16362	6612.35	31495	11266.47	1.704	Si
SLV 16	4.12	-22183	-6296.33	42700	13387.47	2.126	Si
SLV 3	2.22	-13437	-4483.66	25864	9826.69	2.192	Si
SLV 3	4.12	-10607	6131.3	20418	8195.94	1.337	Si
SLV 1	2.22	-7144	-4023.48	13752	5881.88	1.462	Si
SLV 1	4.12	-5888	6240.98	0	0	0	No, e>l/2
SLV 10	2.22	-1705	3725.81	0	0	0	No, e>l/2
SLV 10	4.12	-7906	-1709.01	15218	6420.81	3.757	Si
SLV 2	2.22	-7144	-4023.48	13752	5881.88	1.462	Si
SLV 2	4.12	-5888	6240.98	0	0	0	No, e>l/2
SLV 9	2.22	-1705	3725.81	0	0	0	No, e>l/2
SLV 9	4.12	-7906	-1709.01	15218	6420.81	3.757	Si
SLV 13	2.22	-10070	7072.53	19383	7859.68	1.111	Si
SLV 13	4.12	-17463	-6186.65	33615	11743.75	1.898	Si
SLV 4	2.22	-13437	-4483.66	25864	9826.69	2.192	Si
SLV 4	4.12	-10607	6131.3	20418	8195.94	1.337	Si

Verifica a taglio nel piano secondo D.M. 17-01-18 (N.T.C.) §7.8.2.2.2 con rottura per scorrimento in combinazioni non sismiche, γM = 3

Comb.	Quota	N	V par	M	σ0	σN	l'	fvd	Vt scorr.	Vt fess.diag.	Vt,lim	c.s.	Verifica
SLU 77	2.22	-17389	4124	1926.07		33471	1.8554	10018	5205			1.26	Si
SLU 77	4.12	-21203	4130	-208.48		40813	1.8554	10833	5628			1.36	Si
SLU 75	2.22	-17204	4034	1894.19		33116	1.8554	9971	5180			1.28	Si
SLU 75	4.12	-20913	4039	-167.11		40255	1.8554	10833	5628			1.39	Si
SLU 84	2.22	-17762	4207	1953.2		34190	1.8554	10114	5254			1.25	Si
SLU 84	4.12	-21705	4212	-218.07		41781	1.8554	10833	5628			1.34	Si
SLU 78	2.22	-17402	4123	1927.99		33497	1.8554	10022	5206			1.26	Si
SLU 78	4.12	-21213	4128	-206.51		40832	1.8554	10833	5628			1.36	Si
SLU 83	2.22	-17749	4208	1951.28		34164	1.8554	10111	5253			1.25	Si
SLU 83	4.12	-21695	4214	-220.04		41761	1.8554	10833	5628			1.34	Si
SLU 80	2.22	-17230	4091	1911.88		33166	1.8554	9978	5184			1.27	Si
SLU 80	4.12	-20989	4096	-209.89		40402	1.8554	10833	5628			1.37	Si
SLU 74	2.22	-17191	4036	1892.27		33091	1.8554	9968	5178			1.28	Si
SLU 74	4.12	-20903	4041	-169.08		40236	1.8554	10833	5628			1.39	Si
SLU 81	2.22	-17551	4120	1917.48		33784	1.8554	10060	5226			1.27	Si
SLU 81	4.12	-21396	4125	-180.65		41184	1.8554	10833	5628			1.36	Si
SLU 82	2.22	-17564	4118	1919.4		33809	1.8554	10063	5228			1.27	Si
SLU 82	4.12	-21406	4124	-178.68		41203	1.8554	10833	5628			1.36	Si
SLU 79	2.22	-17217	4092	1909.95		33141	1.8554	9974	5182			1.27	Si
SLU 79	4.12	-20979	4098	-211.86		40383	1.8554	10833	5628			1.37	Si

Verifica a taglio nel piano secondo D.M. 17-01-18 (N.T.C.) §7.8.2.2.2 con rottura per scorrimento in combinazioni sismiche, γM = 2

Comb.	Quota	N	V par	M	σ0	σN	l'	fvd	Vt scorr.	Vt fess.diag.	Vt,lim	c.s.	Verifica
SLV 4	2.22	-13437	-6053	-4483.66		26929	1.782	13719	6845			1.13	Si
SLV 4	4.12	-10607	-6003	6131.3		36113	1.049	15556	4569			0.76	No, Vu<V
SLV 15	2.22	-16362	10497	6612.35		37203	1.5707	15774	6937			0.66	No, Vu<V
SLV 15	4.12	-22183	10924	-6296.33		42700	1.8554	16250	8442			0.77	No, Vu<V
SLV 3	2.22	-13437	-6053	-4483.66		26929	1.782	13719	6845			1.13	Si
SLV 3	4.12	-10607	-6003	6131.3		36113	1.049	15556	4569			0.76	No, Vu<V
SLV 2	2.22	-7144	-5131	-4023.48		23332	1.0936	13000	3981			0.78	No, Vu<V
SLV 2	4.12	-5888	-5551	6240.98		0	0	8333	0			0	No, Vu<V
SLV 16	2.22	-16362	10497	6612.35		37203	1.5707	15774	6937			0.66	No, Vu<V
SLV 16	4.12	-22183	10924	-6296.33		42700	1.8554	16250	8442			0.77	No, Vu<V
SLV 9	2.22	-1705	6703	3725.81		0	0	8333	0			0	No, Vu<V
SLV 9	4.12	-7906	5978	-1709.01		15218	1.8554	11377	5910			0.99	No, Vu<V
SLV 1	2.22	-7144	-5131	-4023.48		23332	1.0936	13000	3981			0.78	No, Vu<V
SLV 1	4.12	-5888	-5551	6240.98		0	0	8333	0			0	No, Vu<V
SLV 13	2.22	-10070	11420	7072.53		53200	0.676	16250	3076			0.27	No, Vu<V
SLV 13	4.12	-17463	11375	-6186.65		36255	1.7203	15584	7507			0.66	No, Vu<V
SLV 10	2.22	-1705	6703	3725.81		0	0	8333	0			0	No, Vu<V
SLV 10	4.12	-7906	5978	-1709.01		15218	1.8554	11377	5910			0.99	No, Vu<V
SLV 14	2.22	-10070	11420	7072.53		53200	0.676	16250	3076			0.27	No, Vu<V
SLV 14	4.12	-17463	11375	-6186.65		36255	1.7203	15584	7507			0.66	No, Vu<V

Verifica a pressoflessione fuori piano D.M. 17-01-18 (N.T.C.)

quota 3.16 Wa 0.05 denominatore 8 γM = 2

Comb.	fd	Sa	σ0	N	M	Mc	Coeff.s.	Verifica
SLV 6	143750	0.31	6477	-3365	167.53	446.11	2.66	Si
SLV 5	143750	0.31	6477	-3365	167.53	446.11	2.66	Si
SLV 2	143750	0.31	12253	-6366	167.53	801.81	4.79	Si
SLV 1	143750	0.31	12253	-6366	167.53	801.81	4.79	Si
SLV 9	143750	0.31	12470	-6478	167.53	814.4	4.86	Si
SLV 10	143750	0.31	12470	-6478	167.53	814.4	4.86	Si
SLV 4	143750	0.31	23197	-12051	167.53	1366.84	8.16	Si
SLV 3	143750	0.31	23197	-12051	167.53	1366.84	8.16	Si
SLV 13	143750	0.31	32230	-16744	167.53	1725.81	10.3	Si
SLV 14	143750	0.31	32230	-16744	167.53	1725.81	10.3	Si

Verifica dei meccanismi locali di collasso con analisi cinematica lineare

forza di aggancio al piano = 0 quota mezzeria = 3.16 Wa = 0.05 Ta = 0.0808

Comb.	N top	N base	V orto	α0	M*	e*	a0*	aLim	Verifica
SLV 10	-7126	152	-78	0	0	0	0	7.42296	No, Trazione
SLV 6	-5714	1074	-102	0	0	0	0	7.42296	No, Trazione
SLV 5	-5714	1074	-102	0	0	0	0	7.42296	No, Trazione

Comb.	N top	N base	V orto	α0	M*	e*	a0*	aLim	Verifica
SLV 9	-7126	152	-78	0	0	0	0	7.42296	No, Trazione
SLV 15	-15555	-13017	69	0.038	1853.3	0.957	0.57462	8.50261	No
SLV 16	-15555	-13017	69	0.038	1853.3	0.957	0.57462	8.50261	No
SLV 2	-7718	-4360	-66	0.038	1058.7	0.931	0.59294	8.50261	No
SLV 1	-7718	-4360	-66	0.038	1058.7	0.931	0.59294	8.50261	No
SLV 12	-17559	-18451	105	0.036	2057.1	0.961	0.54459	7.42296	No
SLV 11	-17559	-18451	105	0.036	2057.1	0.961	0.54459	7.42296	No

Tabella dei coefficienti di sicurezza minimi

Stato limite	Coeff.s.	Comb.	Verifica
PF_SLU	4.895	SLU 84	Si
V_SLU	1.248	SLU 83	Si
PF_SLV	0	SLV 1	No
V_SLV	0	SLV 1	No
PFFP_SLV	2.663	SLV 5	Si
R_SLV	0	SLV 10	No

Maschio 76

Verifiche condotte secondo D.M. 17-01-18 (N.T.C.)

Dati geometrici

X ini.	Y ini.	X fin.	Y fin.	Quota i.	Quota.s	l	Sp.	h netta	h ini.	h fin.	a	a.s.,sx	a.s.,dx
-20.6	1.141	-24.613	1.141	L3	L4	4.013	0.28	3.68	3.68	3.68			

Caratteristiche del materiale

(Circolare 7 21-01-19 C8.5.I) Muratura in mattoni pieni e malta di calce LC2_Corti

fb	fk	fvk0	fmedio	τ0	fv0	μ	ϕ	fv,lim	E	G	FC
600000			345000	9000	20000	0.58	0.77	32500	320000000	128000000	1.2

Verifica a pressoflessione nel piano secondo D.M. 17-01-18 NTC §7.8.2.2.1 in combinazioni non sismiche, γM = 3

Comb.	Quota	N	M	σ0	Mu	c.s.	Verifica
SLU 79	1.32	-29797	14636.27	26520	40320.46	2.755	Si
SLU 79	3.42	-43595	14197.72	38800	45805.02	3.226	Si
SLU 83	1.32	-30461	14861.22	27111	40775.79	2.744	Si
SLU 83	3.42	-44772	14449.84	39848	45886.54	3.176	Si
SLU 78	1.32	-29859	14710.97	26575	40363.68	2.744	Si
SLU 78	3.42	-43774	14479.23	38960	45821.4	3.165	Si
SLU 74	1.32	-29557	14448.67	26306	40151.16	2.779	Si
SLU 74	3.42	-43073	14289.31	38336	45749.47	3.202	Si
SLU 81	1.32	-29990	14559	26692	40454.8	2.779	Si
SLU 81	3.42	-43869	14464.12	39044	45829.43	3.168	Si
SLU 75	1.32	-29388	14408.75	26156	40030.24	2.778	Si
SLU 75	3.42	-42871	14493.51	38156	45724.75	3.155	Si
SLU 84	1.32	-30292	14821.3	26960	40661.58	2.743	Si
SLU 84	3.42	-44570	14654.04	39668	45876.88	3.131	Si
SLU 82	1.32	-29821	14519.08	26541	40337.09	2.778	Si
SLU 82	3.42	-43667	14668.32	38864	45811.76	3.123	Si
SLU 77	1.32	-30028	14750.89	26726	40481.1	2.744	Si
SLU 77	3.42	-43976	14275.03	39140	45838.12	3.211	Si
SLU 80	1.32	-29628	14596.35	26369	40201.31	2.754	Si
SLU 80	3.42	-43392	14401.92	38620	45784.92	3.179	Si

Verifica a pressoflessione nel piano secondo D.M. 17-01-18 NTC §7.8.2.2.1 in combinazioni sismiche, γM = 2

Comb.	Quota	N	M	σ0	Mu	c.s.	Verifica
SLV 11	1.32	-3919	16646.28	0	0	0	No, e>l/2
SLV 11	3.42	-10083	24857.45	0	0	0	No, e>l/2
SLV 8	1.32	-7441	23185.93	0	0	0	No, e>l/2
SLV 8	3.42	-20466	20060.97	18215	34940.45	1.742	Si
SLV 12	1.32	-3919	16646.28	0	0	0	No, e>l/2
SLV 12	3.42	-10083	24857.45	0	0	0	No, e>l/2
SLV 7	1.32	-7441	23185.93	0	0	0	No, e>l/2
SLV 7	3.42	-20466	20060.97	18215	34940.45	1.742	Si
SLV 13	1.32	-18856	-3976.53	16782	32636.26	8.207	Si
SLV 13	3.42	-15507	14960.12	13801	27598.05	1.845	Si
SLV 15	1.32	-10066	2020.34	8959	18715.39	9.263	Si
SLV 15	3.42	-7413	22110.84	0	0	0	No, e>l/2
SLV 14	1.32	-18856	-3976.53	16782	32636.26	8.207	Si
SLV 14	3.42	-15507	14960.12	13801	27598.05	1.845	Si
SLV 16	1.32	-10066	2020.34	8959	18715.39	9.263	Si
SLV 16	3.42	-7413	22110.84	0	0	0	No, e>l/2
SLV 3	1.32	-21805	23819.17	19407	36800.26	1.545	Si
SLV 3	3.42	-42021	6122.58	37400	58504.36	9.556	Si
SLV 4	1.32	-21805	23819.17	19407	36800.26	1.545	Si
SLV 4	3.42	-42021	6122.58	37400	58504.36	9.556	Si

Verifica a taglio nel piano secondo D.M. 17-01-18 (N.T.C.) §7.8.2.2.2 con rottura per scorrimento in combinazioni non sismiche, γM = 3

Comb.	Quota	N	V par	M	σ0	σN	l'	fvd	Vt scorr.	Vt fess.diag.	Vt,lim	c.s.	Verifica
SLU 82	1.32	-29821	16282	14519.08		26541	4.0128	9094	10218			0.63	No, Vu<V
SLU 82	3.42	-43667	19802	14668.32		38864	4.0128	10737	12064			0.61	No, Vu<V
SLU 75	1.32	-29388	15999	14408.75		26156	4.0128	9043	10160			0.64	No, Vu<V
SLU 75	3.42	-42871	19474	14493.51		38156	4.0128	10643	11958			0.61	No, Vu<V
SLU 83	1.32	-30461	16941	14861.22		27111	4.0128	9170	10304			0.61	No, Vu<V
SLU 83	3.42	-44772	20525	14449.84		39848	4.0128	10833	12172			0.59	No, Vu<V
SLU 84	1.32	-30292	16802	14821.3		26960	4.0128	9150	10281			0.61	No, Vu<V
SLU 84	3.42	-44570	20381	14654.04		39668	4.0128	10833	12172			0.6	No, Vu<V

Comb.	Quota	N	V par	M	σ0	σN	l'	fvd	Vt scorr.	Vt fess.diag.	Vt,lim	c.s.	Verifica
SLU 77	1.32	-30028	16658	14750.89		26726	4.0128	9119	10246			0.62	No, Vu<V
SLU 77	3.42	-43976	20197	14275.03		39140	4.0128	10774	12106			0.6	No, Vu<V
SLU 78	1.32	-29859	16520	14710.97		26575	4.0128	9099	10223			0.62	No, Vu<V
SLU 78	3.42	-43774	20053	14479.23		38960	4.0128	10750	12079			0.6	No, Vu<V
SLU 74	1.32	-29557	16138	14448.67		26306	4.0128	9063	10183			0.63	No, Vu<V
SLU 74	3.42	-43073	19618	14289.31		38336	4.0128	10667	11985			0.61	No, Vu<V
SLU 80	1.32	-29628	16377	14596.35		26369	4.0128	9071	10192			0.62	No, Vu<V
SLU 80	3.42	-43392	19884	14401.92		38620	4.0128	10705	12028			0.6	No, Vu<V
SLU 79	1.32	-29797	16516	14636.27		26520	4.0128	9092	10215			0.62	No, Vu<V
SLU 79	3.42	-43595	20028	14197.72		38800	4.0128	10729	12055			0.6	No, Vu<V
SLU 81	1.32	-29990	16420	14559		26692	4.0128	9114	10241			0.62	No, Vu<V
SLU 81	3.42	-43869	19946	14464.12		39044	4.0128	10761	12091			0.61	No, Vu<V

Verifica a taglio nel piano secondo D.M. 17-01-18 (N.T.C.) §7.8.2.2.2 con rottura per scorrimento in combinazioni sismiche, γM = 2

Comb.	Quota	N	V par	M	σ0	σN	l'	fvd	Vt scorr.	Vt fess.diag.	Vt,lim	c.s.	Verifica
SLV 16	1.32	-10066	-10544	2020.34		8959	4.0128	10125	11376			1.08	Si
SLV 16	3.42	-7413	-9174	22110.84		0	0	8333	0			0	No, Vu<V
SLV 4	1.32	-21805	28047	23819.17		28401	2.742	14013	10759			0.38	No, Vu<V
SLV 4	3.42	-42021	30234	6122.58		37400	4.0128	15813	17767			0.59	No, Vu<V
SLV 3	1.32	-21805	28047	23819.17		28401	2.742	14013	10759			0.38	No, Vu<V
SLV 3	3.42	-42021	30234	6122.58		37400	4.0128	15813	17767			0.59	No, Vu<V
SLV 8	1.32	-7441	10775	23185.93		0	0	8333	0			0	No, Vu<V
SLV 8	3.42	-20466	11235	20060.97		23743	3.0784	13082	11276			1	Si
SLV 12	1.32	-3919	-802	16646.28		0	0	8333	0			0	No, Vu<V
SLV 12	3.42	-10083	-587	24857.45		0	0	8333	0			0	No, Vu<V
SLV 1	1.32	-30595	31275	17822.3		27230	4.0128	13779	15482			0.5	No, Vu<V
SLV 1	3.42	-50115	34696	-1028.14		44603	4.0128	16250	18258			0.53	No, Vu<V
SLV 2	1.32	-30595	31275	17822.3		27230	4.0128	13779	15482			0.5	No, Vu<V
SLV 2	3.42	-50115	34696	-1028.14		44603	4.0128	16250	18258			0.53	No, Vu<V
SLV 7	1.32	-7441	10775	23185.93		0	0	8333	0			0	No, Vu<V
SLV 7	3.42	-20466	11235	20060.97		23743	3.0784	13082	11276			1	Si
SLV 11	1.32	-3919	-802	16646.28		0	0	8333	0			0	No, Vu<V
SLV 11	3.42	-10083	-587	24857.45		0	0	8333	0			0	No, Vu<V
SLV 15	1.32	-10066	-10544	2020.34		8959	4.0128	10125	11376			1.08	Si
SLV 15	3.42	-7413	-9174	22110.84		0	0	8333	0			0	No, Vu<V

Verifica a pressoflessione fuori piano D.M. 17-01-18 (N.T.C.)

quota 3.16 Wa 0.05 denominatore 8 γM = 2

Comb.	fd	Sa	σ0	N	M	Mc	Coeff.s.	Verifica
SLV 16	143750	0.31	7259	-8155	370.75	1073.94	2.9	Si
SLV 15	143750	0.31	7259	-8155	370.75	1073.94	2.9	Si
SLV 12	143750	0.31	8483	-9531	370.75	1241.71	3.35	Si
SLV 11	143750	0.31	8483	-9531	370.75	1241.71	3.35	Si
SLV 13	143750	0.31	15222	-17103	370.75	2096.12	5.65	Si
SLV 14	143750	0.31	15222	-17103	370.75	2096.12	5.65	Si
SLV 7	143750	0.31	17496	-19657	370.75	2357.99	6.36	Si
SLV 8	143750	0.31	17496	-19657	370.75	2357.99	6.36	Si
SLV 10	143750	0.31	35027	-39356	370.75	3930.32	10.6	Si
SLV 9	143750	0.31	35027	-39356	370.75	3930.32	10.6	Si

Verifica dei meccanismi locali di collasso con analisi cinematica lineare

forza di aggancio al piano = 0 quota mezzeria = 3.16 Wa = 0.05 Ta = 0.0808

Comb.	N top	N base	V orto	α0	M*	e*	a0*	aLim	Verifica
SLV 12	-19904	-3919	-477	0.024	2614.2	0.938	0.36945	7.42296	No
SLV 11	-19904	-3919	-477	0.024	2614.2	0.938	0.36945	7.42296	No
SLV 6	-40635	-36742	589	0.028	4719.5	0.963	0.4218	7.42296	No
SLV 5	-40635	-36742	589	0.028	4719.5	0.963	0.4218	7.42296	No
SLV 10	-35277	-33220	511	0.029	4174.5	0.959	0.43321	7.42296	No
SLV 9	-35277	-33220	511	0.029	4174.5	0.959	0.43321	7.42296	No
SLV 1	-41506	-30595	335	0.034	4808.1	0.964	0.50924	8.50261	No
SLV 2	-41506	-30595	335	0.034	4808.1	0.964	0.50924	8.50261	No
SLV 7	-25262	-7441	-399	0.029	3157.2	0.947	0.4477	7.42296	No
SLV 8	-25262	-7441	-399	0.029	3157.2	0.947	0.4477	7.42296	No

Tabella dei coefficienti di sicurezza minimi

Stato limite	Coeff.s.	Comb.	Verifica
PF_SLU	2.743	SLU 84	Si
V_SLU	0.593	SLU 83	No
PF_SLV	0	SLV 7	No
V_SLV	0	SLV 7	No
PFFP_SLV	2.897	SLV 15	Si
R_SLV	0.05	SLV 11	No

Maschio 77

Verifiche condotte secondo D.M. 17-01-18 (N.T.C.)

Dati geometrici

X ini.	Y ini.	X fin.	Y fin.	Quota i.	Quota.s	l	Sp.	h netta	h ini.	h fin.	a	a.s.,sx	a.s.,dx
-12.865	1.141	-19.8	1.141	L3	L4	6.935	0.28	3.68	3.68	3.68			

Caratteristiche del materiale

(Circolare 7 21-01-19 C8.5.I) Muratura in mattoni pieni e malta di calce LC2_Corti

fb	fk	fvk0	fmedio	τ0	fv0	μ	ϕ	fv,lim	E	G	FC
600000			345000	9000	20000	0.58	0.77	32500	320000000	128000000	1.2

Verifica a pressoflessione nel piano secondo D.M. 17-01-18 NTC §7.8.2.2.1 in combinazioni non sismiche, γM = 3

Comb.	Quota	N	M	σ0	Mu	c.s.	Verifica
SLU 79	1.32	-121634	-2492.13	62640	97435.49	39.097	Si
SLU 79	3.82	-97022	-17044.99	49965	130067.83	7.631	Si
SLU 78	1.32	-122447	-2647.65	63059	95904.46	36.223	Si
SLU 78	3.82	-97689	-18029.68	50309	129533.26	7.184	Si
SLU 81	1.32	-122658	-3334.16	63167	95502.49	28.644	Si
SLU 81	3.82	-97890	-16468.63	50412	129369	7.855	Si
SLU 76	1.32	-118988	-2800.32	61277	102219.45	36.503	Si
SLU 76	3.82	-94484	-17561.43	48658	131922.14	7.512	Si
SLU 83	1.32	-124872	-3149.75	64307	91166.95	28.944	Si
SLU 83	3.82	-99938	-17264.27	51467	127588.25	7.39	Si
SLU 77	1.32	-122708	-2573.38	63193	95408.45	37.075	Si
SLU 77	3.82	-97983	-17242.43	50460	129291.97	7.498	Si
SLU 75	1.32	-120234	-2832.06	61919	100004.75	35.312	Si
SLU 75	3.82	-95641	-17234.04	49254	131112.02	7.608	Si
SLU 80	1.32	-121374	-2566.4	62506	97919.26	38.154	Si
SLU 80	3.82	-96728	-17832.23	49814	130296.76	7.307	Si
SLU 84	1.32	-124612	-3224.02	64173	91687.64	28.439	Si
SLU 84	3.82	-99645	-18051.52	51316	127854.71	7.083	Si
SLU 82	1.32	-122398	-3408.43	63033	95997.94	28.165	Si
SLU 82	3.82	-97596	-17255.88	50261	129609.09	7.511	Si

Verifica a pressoflessione nel piano secondo D.M. 17-01-18 NTC §7.8.2.2.1 in combinazioni sismiche, γM = 2

Comb.	Quota	N	M	σ0	Mu	c.s.	Verifica
SLV 4	1.32	-72565	32802.23	37370	174663.93	5.325	Si
SLV 4	3.82	-66228	-41800.19	34106	165543.67	3.96	Si
SLV 1	1.32	-91403	43192.12	47071	194842.34	4.511	Si
SLV 1	3.82	-72104	-47868.02	37133	174040.32	3.636	Si
SLV 16	1.32	-71146	-46260.93	36639	172723.68	3.734	Si
SLV 16	3.82	-54802	27245.73	28222	146134.78	5.364	Si
SLV 12	1.32	-49666	-30710.36	25577	136166.4	4.434	Si
SLV 12	3.82	-51945	10158.79	26751	140685.1	13.849	Si
SLV 13	1.32	-89984	-35871.04	46340	193683.47	5.399	Si
SLV 13	3.82	-60679	21177.9	31249	156594	7.394	Si
SLV 2	1.32	-91403	43192.12	47071	194842.34	4.511	Si
SLV 2	3.82	-72104	-47868.02	37133	174040.32	3.636	Si
SLV 11	1.32	-49666	-30710.36	25577	136166.4	4.434	Si
SLV 11	3.82	-51945	10158.79	26751	140685.1	13.849	Si
SLV 15	1.32	-71146	-46260.93	36639	172723.68	3.734	Si
SLV 15	3.82	-54802	27245.73	28222	146134.78	5.364	Si
SLV 14	1.32	-89984	-35871.04	46340	193683.47	5.399	Si
SLV 14	3.82	-60679	21177.9	31249	156594	7.394	Si
SLV 3	1.32	-72565	32802.23	37370	174663.93	5.325	Si
SLV 3	3.82	-66228	-41800.19	34106	165543.67	3.96	Si

Verifica a taglio nel piano secondo D.M. 17-01-18 (N.T.C.) §7.8.2.2.2 con rottura per scorrimento in combinazioni non sismiche, γM = 3

Comb.	Quota	N	V par	M	σ0	σN	l'	fvd	Vt scorr.	Vt fess.diag.	Vt,lim	c.s.	Verifica
SLU 43	1.32	-92041	-1563	-1154.17		47400	6.935	10833	21036			13.46	Si
SLU 43	3.82	-70302	-1510	-11123.19		36205	6.935	10383	20161			13.35	Si
SLU 66	1.32	-107776	-1105	-1653.64		55503	6.935	10833	21036			19.03	Si
SLU 66	3.82	-84349	-1255	-14078.65		43439	6.935	10833	21036			16.76	Si
SLU 45	1.32	-95328	-1194	-1051.01		49092	6.935	10833	21036			17.62	Si
SLU 45	3.82	-73312	-1224	-12116.27		37755	6.935	10589	20563			16.8	Si
SLU 53	1.32	-108046	-1042	-2155.16		55642	6.935	10833	21036			20.19	Si
SLU 53	3.82	-84897	-1166	-14484.41		43721	6.935	10833	21036			18.04	Si
SLU 74	1.32	-120494	-953	-2757.79		62053	6.935	10833	21036			22.07	Si
SLU 74	3.82	-95934	-1198	-16446.8		49405	6.935	10833	21036			17.56	Si
SLU 81	1.32	-122658	-1257	-3334.16		63167	6.935	10833	21036			16.73	Si
SLU 81	3.82	-97890	-1460	-16468.63		50412	6.935	10833	21036			14.41	Si
SLU 64	1.32	-104490	-1475	-1756.79		53811	6.935	10833	21036			14.27	Si
SLU 64	3.82	-81340	-1542	-13085.57		41889	6.935	10833	21036			13.65	Si
SLU 1	1.32	-74084	-1179	-1046.75		38152	6.935	10643	20666			17.53	Si
SLU 1	3.82	-56990	-1170	-9073.85		29349	6.935	9469	18386			15.72	Si
SLU 22	1.32	-86532	-1090	-1649.38		44563	6.935	10833	21036			19.29	Si
SLU 22	3.82	-68027	-1201	-11036.23		35033	6.935	10227	19858			16.53	Si
SLU 60	1.32	-110210	-1346	-2731.53		56757	6.935	10833	21036			15.63	Si
SLU 60	3.82	-86852	-1428	-14506.25		44728	6.935	10833	21036			14.73	Si

Verifica a taglio nel piano secondo D.M. 17-01-18 (N.T.C.) §7.8.2.2.2 con rottura per scorrimento in combinazioni sismiche, γM = 2

Comb.	Quota	N	V par	M	σ0	σN	l'	fvd	Vt scorr.	Vt fess.diag.	Vt,lim	c.s.	Verifica
SLV 16	1.32	-71146	-37210	-46260.93		36639	6.935	15661	30411			0.82	No, Vu<V
SLV 16	3.82	-54802	-33484	27245.73		28222	6.935	13978	27142			0.81	No, Vu<V
SLV 14	1.32	-89984	-44431	-35871.04		46340	6.935	16250	31554			0.71	No, Vu<V
SLV 14	3.82	-60679	-36419	21177.9		31249	6.935	14583	28317			0.78	No, Vu<V
SLV 1	1.32	-91403	34990	43192.12		47071	6.935	16250	31554			0.9	No, Vu<V
SLV 1	3.82	-72104	31159	-47868.02		37133	6.935	15760	30603			0.98	No, Vu<V
SLV 7	1.32	-50091	22838	-6991.42		25796	6.935	13493	26200			1.15	Si
SLV 7	3.82	-55373	13866	-10554.99		28516	6.935	14037	27256			1.97	Si
SLV 13	1.32	-89984	-44431	-35871.04		46340	6.935	16250	31554			0.71	No, Vu<V
SLV 13	3.82	-60679	-36419	21177.9		31249	6.935	14583	28317			0.78	No, Vu<V
SLV 3	1.32	-72565	42211	32802.23		37370	6.935	15807	30695			0.73	No, Vu<V
SLV 3	3.82	-66228	34094	-41800.19		34106	6.935	15155	29427			0.86	No, Vu<V
SLV 2	1.32	-91403	34990	43192.12		47071	6.935	16250	31554			0.9	No, Vu<V
SLV 2	3.82	-72104	31159	-47868.02		37133	6.935	15760	30603			0.98	No, Vu<V
SLV 15	1.32	-71146	-37210	-46260.93		36639	6.935	15661	30411			0.82	No, Vu<V
SLV 15	3.82	-54802	-33484	27245.73		28222	6.935	13978	27142			0.81	No, Vu<V
SLV 8	1.32	-50091	22838	-6991.42		25796	6.935	13493	26200			1.15	Si
SLV 8	3.82	-55373	13866	-10554.99		28516	6.935	14037	27256			1.97	Si
SLV 4	1.32	-72565	42211	32802.23		37370	6.935	15807	30695			0.73	No, Vu<V

Comb.	Quota	N	V par	M	σ0	σN	l'	fvd	Vt scorr.	Vt fess.diag.	Vt,lim	c.s.	Verifica
SLV 4	3.82	-66228	34094	-41800.19		34106	6.935	15155	29427			0.86	No, Vu<V

Verifica a pressoflessione fuori piano D.M. 17-01-18 (N.T.C.)

quota 3.16 Wa 0.05 denominatore 8 γM = 2

Comb.	fd	Sa	σ0	N	M	Mc	Coeff.s.	Verifica
SLV 12	143750	0.31	28239	-54835	640.75	5902.63	9.21	Si
SLV 11	143750	0.31	28239	-54835	640.75	5902.63	9.21	Si
SLV 7	143750	0.31	29043	-56395	640.75	6018.7	9.39	Si
SLV 8	143750	0.31	29043	-56395	640.75	6018.7	9.39	Si
SLV 15	143750	0.31	31669	-61496	640.75	6377.96	9.95	Si
SLV 16	143750	0.31	31669	-61496	640.75	6377.96	9.95	Si
SLV 3	143750	0.31	34349	-66698	640.75	6712.78	10.48	Si
SLV 4	143750	0.31	34349	-66698	640.75	6712.78	10.48	Si
SLV 13	143750	0.31	35414	-68766	640.75	6836.99	10.67	Si
SLV 14	143750	0.31	35414	-68766	640.75	6836.99	10.67	Si

Verifica dei meccanismi locali di collasso con analisi cinematica lineare

forza di aggancio al piano = 0 quota mezzeria = 3.16 Wa = 0.05 Ta = 0.0808

Comb.	N top	N base	V orto	α0	M*	e*	a0*	aLim	Verifica
SLV 11	-58402	-49666	-709	0.031	6953.8	0.957	0.46878	7.42296	No
SLV 12	-58402	-49666	-709	0.031	6953.8	0.957	0.46878	7.42296	No
SLV 6	-65421	-112883	721	0.031	7667.6	0.961	0.47516	7.42296	No
SLV 5	-65421	-112883	721	0.031	7667.6	0.961	0.47516	7.42296	No
SLV 2	-65148	-91403	351	0.037	7639.8	0.961	0.55298	8.50261	No
SLV 1	-65148	-91403	351	0.037	7639.8	0.961	0.55298	8.50261	No
SLV 15	-58675	-71146	-340	0.037	6981.6	0.957	0.55536	8.50261	No
SLV 16	-58675	-71146	-340	0.037	6981.6	0.957	0.55536	8.50261	No
SLV 7	-59842	-50091	-623	0.032	7100.2	0.958	0.49051	7.42296	No
SLV 8	-59842	-50091	-623	0.032	7100.2	0.958	0.49051	7.42296	No

Tabella dei coefficienti di sicurezza minimi

Stato limite	Coeff.s.	Comb.	Verifica
PF_SLU	7.083	SLU 84	Si
V_SLU	13.351	SLU 43	Si
PF_SLV	3.636	SLV 1	Si
V_SLV	0.71	SLV 13	No
PFFP_SLV	9.212	SLV 11	Si
R_SLV	0.063	SLV 11	No

Maschio 78

Verifiche condotte secondo D.M. 17-01-18 (N.T.C.)

Dati geometrici

X ini.	Y ini.	X fin.	Y fin.	Quota i.	Quota.s	l	Sp.	h netta	h ini.	h fin.	a	a.s.,sx	a.s.,dx
-4.93	1.141	-11.865	1.141	L3	L4	6.935	0.28	3.68	3.68	3.68			

Caratteristiche del materiale

(Circolare 7 21-01-19 C8.5.I) Muratura in mattoni pieni e malta di calce LC2_Corti

fb	fk	fvk0	fmedio	τ0	fv0	μ	ϕ	fv,lim	E	G	FC
600000			345000	9000	20000	0.58	0.77	32500	320000000	128000000	1.2

Verifica a pressoflessione nel piano secondo D.M. 17-01-18 NTC §7.8.2.2.1 in combinazioni non sismiche, γM = 3

Comb.	Quota	N	M	σ0	Mu	c.s.	Verifica
SLU 81	1.32	-102966	14780.1	53026	124620.22	8.432	Si
SLU 81	3.82	-94088	23386.49	48454	132186.62	5.652	Si
SLU 75	1.32	-101219	14076.8	52126	126382.23	8.978	Si
SLU 75	3.82	-92109	23146.84	47435	133401.71	5.763	Si
SLU 82	1.32	-102862	14666.77	52972	124728.64	8.504	Si
SLU 82	3.82	-93913	23991.91	48364	132300.54	5.514	Si
SLU 77	1.32	-103438	14534.32	53269	124120.82	8.54	Si
SLU 77	3.82	-94444	22683.97	48637	131949.42	5.817	Si
SLU 80	1.32	-102427	14380.91	52748	125177.83	8.704	Si
SLU 80	3.82	-93338	22996.91	48068	132667.41	5.769	Si
SLU 73	1.32	-98126	13616.97	50534	129172.83	9.486	Si
SLU 73	3.82	-88901	23115.43	45783	135007.79	5.841	Si
SLU 84	1.32	-104977	15010.96	54062	122425.38	8.156	Si
SLU 84	3.82	-96074	24134.46	49477	130794.05	5.419	Si
SLU 83	1.32	-105081	15124.29	54115	122307.34	8.087	Si
SLU 83	3.82	-96248	23529.04	49566	130663.63	5.553	Si
SLU 76	1.32	-100242	13961.16	51623	127308.8	9.119	Si
SLU 76	3.82	-91061	23257.98	46895	133976.05	5.76	Si
SLU 78	1.32	-103334	14421	53216	124231.39	8.615	Si
SLU 78	3.82	-94270	23289.39	48548	132066.06	5.671	Si

Verifica a pressoflessione nel piano secondo D.M. 17-01-18 NTC §7.8.2.2.1 in combinazioni sismiche, γM = 2

Comb.	Quota	N	M	σ0	Mu	c.s.	Verifica
SLV 16	1.32	-59721	-19166.91	30755	154958.01	8.085	Si
SLV 16	3.82	-67382	52352.93	34701	167291.66	3.195	Si
SLV 13	1.32	-74993	-29963.64	38620	177847.19	5.935	Si
SLV 13	3.82	-63795	49750.57	32854	161731.06	3.251	Si
SLV 14	1.32	-74993	-29963.64	38620	177847.19	5.935	Si
SLV 14	3.82	-63795	49750.57	32854	161731.06	3.251	Si
SLV 7	1.32	-42739	37227.38	22010	121503.07	3.264	Si
SLV 7	3.82	-65212	8588.37	33583	163972.84	19.092	Si

Comb.	Quota	N	M	σ0	Mu	c.s.	Verifica
SLV 8	1.32	-42739	37227.38	22010	121503.07	3.264	Si
SLV 8	3.82	-65212	8588.37	33583	163972.84	19.092	Si
SLV 3	1.32	-61008	48214.8	31418	157149.88	3.259	Si
SLV 3	3.82	-57606	-19648.05	29666	151251.99	7.698	Si
SLV 2	1.32	-76280	37418.07	39283	179464.55	4.796	Si
SLV 2	3.82	-54020	-22250.41	27819	144666.66	6.502	Si
SLV 15	1.32	-59721	-19166.91	30755	154958.01	8.085	Si
SLV 15	3.82	-67382	52352.93	34701	167291.66	3.195	Si
SLV 1	1.32	-76280	37418.07	39283	179464.55	4.796	Si
SLV 1	3.82	-54020	-22250.41	27819	144666.66	6.502	Si
SLV 4	1.32	-61008	48214.8	31418	157149.88	3.259	Si
SLV 4	3.82	-57606	-19648.05	29666	151251.99	7.698	Si

Verifica a taglio nel piano secondo D.M. 17-01-18 (N.T.C.) §7.8.2.2.2 con rottura per scorrimento in combinazioni non sismiche, γM = 3

Comb.	Quota	N	V par	M	σ0	σN	l'	fvd	Vt scorr.	Vt fess.diag.	Vt,lim	c.s.	Verifica
SLU 10	1.32	-72549	-875	10046.73		37362	6.935	10537	20461			23.38	Si
SLU 10	3.82	-65471	-1589	17531.51		33717	6.935	10051	19517			12.28	Si
SLU 52	1.32	-87433	-924	11819		45027	6.935	10833	21036			22.78	Si
SLU 52	3.82	-78053	-1819	20797.45		40196	6.935	10833	21036			11.56	Si
SLU 61	1.32	-92168	-835	12868.8		47465	6.935	10833	21036			25.2	Si
SLU 61	3.82	-83066	-1715	21673.93		42778	6.935	10833	21036			12.27	Si
SLU 31	1.32	-83242	-908	11844.7		42869	6.935	10833	21036			23.18	Si
SLU 31	3.82	-76319	-1631	19849.49		39303	6.935	10796	20964			12.85	Si
SLU 65	1.32	-87239	-737	11343.73		44927	6.935	10833	21036			28.55	Si
SLU 65	3.82	-77477	-1615	20128.54		39899	6.935	10833	21036			13.03	Si
SLU 55	1.32	-89549	-768	12163.19		46116	6.935	10833	21036			27.4	Si
SLU 55	3.82	-80214	-1645	20940		41309	6.935	10833	21036			12.78	Si
SLU 82	1.32	-102862	-867	14666.77		52972	6.935	10833	21036			24.25	Si
SLU 82	3.82	-93913	-1757	23991.91		48364	6.935	10833	21036			11.97	Si
SLU 76	1.32	-100242	-800	13961.16		51623	6.935	10833	21036			26.28	Si
SLU 76	3.82	-91061	-1688	23257.98		46895	6.935	10833	21036			12.47	Si
SLU 44	1.32	-76546	-704	9545.76		39420	6.935	10812	20994			29.81	Si
SLU 44	3.82	-66629	-1573	17810.56		34313	6.935	10131	19672			12.51	Si
SLU 73	1.32	-98126	-956	13616.97		50534	6.935	10833	21036			22	Si
SLU 73	3.82	-88901	-1862	23115.43		45783	6.935	10833	21036			11.3	Si

Verifica a taglio nel piano secondo D.M. 17-01-18 (N.T.C.) §7.8.2.2.2 con rottura per scorrimento in combinazioni sismiche, γM = 2

Comb.	Quota	N	V par	M	σ0	σN	l'	fvd	Vt scorr.	Vt fess.diag.	Vt,lim	c.s.	Verifica
SLV 1	1.32	-76280	44155	37418.07		39283	6.935	16190	31438			0.71	No, Vu<V
SLV 1	3.82	-54020	34482	-22250.41		27819	6.935	13897	26986			0.78	No, Vu<V
SLV 13	1.32	-74993	-33982	-29963.64		38620	6.935	16057	31180			0.92	No, Vu<V
SLV 13	3.82	-63795	-33544	49750.57		32854	6.935	14904	28941			0.86	No, Vu<V
SLV 2	1.32	-76280	44155	37418.07		39283	6.935	16190	31438			0.71	No, Vu<V
SLV 2	3.82	-54020	34482	-22250.41		27819	6.935	13897	26986			0.78	No, Vu<V
SLV 3	1.32	-61008	33440	48214.8		31418	6.935	14617	28383			0.85	No, Vu<V
SLV 3	3.82	-57606	31746	-19648.05		29666	6.935	14267	27703			0.87	No, Vu<V
SLV 12	1.32	-42353	-29850	17012.87		21811	6.935	12696	24652			0.83	No, Vu<V
SLV 12	3.82	-68145	-15663	30188.67		35093	6.935	15352	29811			1.9	Si
SLV 15	1.32	-59721	-44697	-19166.91		30755	6.935	14484	28126			0.63	No, Vu<V
SLV 15	3.82	-67382	-36280	52352.93		34701	6.935	15273	29658			0.82	No, Vu<V
SLV 4	1.32	-61008	33440	48214.8		31418	6.935	14617	28383			0.85	No, Vu<V
SLV 4	3.82	-57606	31746	-19648.05		29666	6.935	14267	27703			0.87	No, Vu<V
SLV 14	1.32	-74993	-33982	-29963.64		38620	6.935	16057	31180			0.92	No, Vu<V
SLV 14	3.82	-63795	-33544	49750.57		32854	6.935	14904	28941			0.86	No, Vu<V
SLV 16	1.32	-59721	-44697	-19166.91		30755	6.935	14484	28126			0.63	No, Vu<V
SLV 16	3.82	-67382	-36280	52352.93		34701	6.935	15273	29658			0.82	No, Vu<V
SLV 11	1.32	-42353	-29850	17012.87		21811	6.935	12696	24652			0.83	No, Vu<V
SLV 11	3.82	-68145	-15663	30188.67		35093	6.935	15352	29811			1.9	Si

Verifica a pressoflessione fuori piano D.M. 17-01-18 (N.T.C.)

quota 3.16 Wa 0.05 denominatore 8 γM = 2

Comb.	fd	Sa	σ0	N	M	Mc	Coeff.s.	Verifica
SLV 2	143750	0.31	32277	-62676	640.75	6456.68	10.08	Si
SLV 1	143750	0.31	32277	-62676	640.75	6456.68	10.08	Si
SLV 5	143750	0.31	32511	-63129	640.75	6486.52	10.12	Si
SLV 6	143750	0.31	32511	-63129	640.75	6486.52	10.12	Si
SLV 3	143750	0.31	32619	-63340	640.75	6500.33	10.14	Si
SLV 4	143750	0.31	32619	-63340	640.75	6500.33	10.14	Si
SLV 9	143750	0.31	33053	-64183	640.75	6554.88	10.23	Si
SLV 10	143750	0.31	33053	-64183	640.75	6554.88	10.23	Si
SLV 8	143750	0.31	33652	-65345	640.75	6628.78	10.35	Si
SLV 7	143750	0.31	33652	-65345	640.75	6628.78	10.35	Si

Verifica dei meccanismi locali di collasso con analisi cinematica lineare

forza di aggancio al piano = 0 quota mezzeria = 3.16 Wa = 0.05 Ta = 0.0808

Comb.	N top	N base	V orto	α0	M*	e*	a0*	aLim	Verifica
SLV 9	-56738	-93262	693	0.031	6784.6	0.956	0.47019	7.42296	No
SLV 10	-56738	-93262	693	0.031	6784.6	0.956	0.47019	7.42296	No
SLV 6	-55796	-93648	667	0.031	6688.9	0.956	0.47537	7.42296	No
SLV 5	-55796	-93648	667	0.031	6688.9	0.956	0.47537	7.42296	No
SLV 8	-63443	-42739	-655	0.032	7466.4	0.96	0.48708	7.42296	No
SLV 7	-63443	-42739	-655	0.032	7466.4	0.96	0.48708	7.42296	No
SLV 11	-64385	-42353	-628	0.033	7562.1	0.96	0.49374	7.42296	No
SLV 12	-64385	-42353	-628	0.033	7562.1	0.96	0.49374	7.42296	No
SLV 13	-60512	-74993	262	0.038	7168.3	0.958	0.57297	8.50261	No
SLV 14	-60512	-74993	262	0.038	7168.3	0.958	0.57297	8.50261	No

Tabella dei coefficienti di sicurezza minimi

Stato limite	Coeff.s.	Comb.	Verifica

Stato limite	Coeff.s.	Comb.	Verifica
PF_SLU	5.419	SLU 84	Si
V_SLU	11.3	SLU 73	Si
PF_SLV	3.195	SLV 15	Si
V_SLV	0.629	SLV 15	No
PFFP_SLV	10.077	SLV 1	Si
R_SLV	0.063	SLV 9	No

Maschio 79

Verifiche condotte secondo D.M. 17-01-18 (N.T.C.)

Dati geometrici

X ini.	Y ini.	X fin.	Y fin.	Quota i.	Quota.s	l	Sp.	h netta	h ini.	h fin.	a	a.s.,sx	a.s.,dx
-0.117	1.141	-4.13	1.141	L3	L4	4.013	0.28	3.68	3.68	3.68			

Caratteristiche del materiale

(Circolare 7 21-01-19 C8.5.I) Muratura in mattoni pieni e malta di calce LC2_Corti

fb	fk	fvk0	fmedio	τ0	fv0	μ	ϕ	fv,lim	E	G	FC
600000			345000	9000	20000	0.58	0.77	32500	320000000	128000000	1.2

Verifica a pressoflessione nel piano secondo D.M. 17-01-18 NTC §7.8.2.2.1 in combinazioni non sismiche, γM = 3

Comb.	Quota	N	M	σ0	Mu	c.s.	Verifica
SLU 77	1.32	-20882	-10440.8	18586	32336.63	3.097	Si
SLU 77	3.42	-35537	-19439.76	31630	43614.14	2.244	Si
SLU 83	1.32	-21123	-10857.27	18800	32597.82	3.002	Si
SLU 83	3.42	-36359	-19868.71	32361	43967.38	2.213	Si
SLU 75	1.32	-20339	-10277.25	18103	31737.99	3.088	Si
SLU 75	3.42	-34685	-19371.2	30871	43216.06	2.231	Si
SLU 76	1.32	-20028	-10140.45	17826	31388.9	3.095	Si
SLU 76	3.42	-34155	-19335.2	30400	42952.77	2.221	Si
SLU 78	1.32	-20691	-10365.86	18416	32127.09	3.099	Si
SLU 78	3.42	-35313	-19552.15	31430	43512.56	2.225	Si
SLU 73	1.32	-19676	-10051.83	17513	30989.58	3.083	Si
SLU 73	3.42	-33527	-19154.25	29841	42624.37	2.225	Si
SLU 84	1.32	-20931	-10782.33	18630	32390.3	3.004	Si
SLU 84	3.42	-36134	-19981.1	32161	43873.87	2.196	Si
SLU 81	1.32	-20771	-10768.65	18487	32215.38	2.992	Si
SLU 81	3.42	-35730	-19687.76	31801	43699.68	2.22	Si
SLU 80	1.32	-20507	-10279.02	18252	31924.4	3.106	Si
SLU 80	3.42	-34933	-19441.22	31092	43335.29	2.229	Si
SLU 82	1.32	-20580	-10693.71	18317	32004.91	2.993	Si
SLU 82	3.42	-35506	-19800.15	31602	43599.99	2.202	Si

Verifica a pressoflessione nel piano secondo D.M. 17-01-18 NTC §7.8.2.2.1 in combinazioni sismiche, γM = 2

Comb.	Quota	N	M	σ0	Mu	c.s.	Verifica
SLV 16	1.32	-13893	-20588.56	12365	25052.98	1.217	Si
SLV 16	3.42	-35298	-8280.15	31417	52609.92	6.354	Si
SLV 2	1.32	-14300	6791.36	12728	25702.34	3.785	Si
SLV 2	3.42	-10955	-18575.25	9750	20224.88	1.089	Si
SLV 15	1.32	-13893	-20588.56	12365	25052.98	1.217	Si
SLV 15	3.42	-35298	-8280.15	31417	52609.92	6.354	Si
SLV 11	1.32	1057	-20921.6	0	0	0	No, Trazione
SLV 11	3.42	-11700	-18546.01	10413	21473.26	1.158	Si
SLV 3	1.32	-4349	253.33	3871	8449.17	33.352	Si
SLV 3	3.42	-1013	-22968.16	0	0	0	No, e>l/2
SLV 1	1.32	-14300	6791.36	12728	25702.34	3.785	Si
SLV 1	3.42	-10955	-18575.25	9750	20224.88	1.089	Si
SLV 7	1.32	3920	-14669.04	0	0	0	No, Trazione
SLV 7	3.42	-1415	-22952.42	0	0	0	No, e>l/2
SLV 4	1.32	-4349	253.33	3871	8449.17	33.352	Si
SLV 4	3.42	-1013	-22968.16	0	0	0	No, e>l/2
SLV 8	1.32	3920	-14669.04	0	0	0	No, Trazione
SLV 8	3.42	-1415	-22952.42	0	0	0	No, e>l/2
SLV 12	1.32	1057	-20921.6	0	0	0	No, Trazione
SLV 12	3.42	-11700	-18546.01	10413	21473.26	1.158	Si

Verifica a taglio nel piano secondo D.M. 17-01-18 (N.T.C.) §7.8.2.2.2 con rottura per scorrimento in combinazioni non sismiche, γM = 3

Comb.	Quota	N	V par	M	σ0	σN	l'	fvd	Vt scorr.	Vt fess.diag.	Vt,lim	c.s.	Verifica
SLU 82	1.32	-20580	-15649	-10693.71		18317	4.0126	7998	8986			0.57	No, Vu<V
SLU 82	3.42	-35506	-15232	-19800.15		31602	4.0126	9769	10976			0.72	No, Vu<V
SLU 79	1.32	-20698	-15260	-10353.96		18422	4.0126	8012	9002			0.59	No, Vu<V
SLU 79	3.42	-35157	-14839	-19328.82		31292	4.0126	9728	10930			0.74	No, Vu<V
SLU 75	1.32	-20339	-15097	-10277.25		18103	4.0126	7969	8954			0.59	No, Vu<V
SLU 75	3.42	-34685	-14686	-19371.2		30871	4.0126	9672	10867			0.74	No, Vu<V
SLU 83	1.32	-21123	-15989	-10857.27		18800	4.0126	8062	9058			0.57	No, Vu<V
SLU 83	3.42	-36359	-15559	-19868.71		32361	4.0126	9870	11090			0.71	No, Vu<V
SLU 77	1.32	-20882	-15438	-10440.8		18586	4.0126	8034	9026			0.58	No, Vu<V
SLU 77	3.42	-35537	-15013	-19439.76		31630	4.0126	9773	10980			0.73	No, Vu<V
SLU 81	1.32	-20771	-15765	-10768.65		18487	4.0126	8021	9011			0.57	No, Vu<V
SLU 81	3.42	-35730	-15341	-19687.76		31801	4.0126	9796	11006			0.72	No, Vu<V
SLU 78	1.32	-20691	-15322	-10365.86		18416	4.0126	8011	9001			0.59	No, Vu<V
SLU 78	3.42	-35313	-14904	-19552.15		31430	4.0126	9746	10950			0.73	No, Vu<V
SLU 84	1.32	-20931	-15873	-10782.33		18630	4.0126	8040	9033			0.57	No, Vu<V
SLU 84	3.42	-36134	-15450	-19981.1		32161	4.0126	9844	11060			0.72	No, Vu<V
SLU 74	1.32	-20530	-15213	-10352.19		18273	4.0126	7992	8979			0.59	No, Vu<V
SLU 74	3.42	-34909	-14795	-19258.81		31071	4.0126	9698	10896			0.74	No, Vu<V
SLU 80	1.32	-20507	-15144	-10279.02		18252	4.0126	7989	8976			0.59	No, Vu<V

Comb.	Quota	N	V par	M	σ0	σN	l'	fvd	Vt scorr.	Vt fess.diag.	Vt,lim	c.s.	Verifica
SLU 80	3.42	-34933	-14730	-19441.22		31092	4.0126	9701	10900			0.74	No, Vu<V

Verifica a taglio nel piano secondo D.M. 17-01-18 (N.T.C.) §7.8.2.2.2 con rottura per scorrimento in combinazioni sismiche, γM = 2

Comb.	Quota	N	V par	M	σ0	σN	l'	fvd	Vt scorr.	Vt fess.diag.	Vt,lim	c.s.	Verifica
SLV 4	1.32	-4349	11379	253.33		3871	4.0126	9108	10233			0.9	No, Vu<V
SLV 4	3.42	-1013	12209	-22968.16		0	0	8333	0			0	No, Vu<V
SLV 15	1.32	-13893	-27187	-20588.56		31541	1.5731	14641	6449			0.24	No, Vu<V
SLV 15	3.42	-35298	-27407	-8280.15		31417	4.0126	14617	16422			0.6	No, Vu<V
SLV 7	1.32	3920	2464	-14669.04		0	0	8333	0			0	No, Vu<V
SLV 7	3.42	-1415	2965	-22952.42		0	0	8333	0			0	No, Vu<V
SLV 16	1.32	-13893	-27187	-20588.56		31541	1.5731	14641	6449			0.24	No, Vu<V
SLV 16	3.42	-35298	-27407	-8280.15		31417	4.0126	14617	16422			0.6	No, Vu<V
SLV 8	1.32	3920	2464	-14669.04		0	0	8333	0			0	No, Vu<V
SLV 8	3.42	-1415	2965	-22952.42		0	0	8333	0			0	No, Vu<V
SLV 14	1.32	-23844	-31116	-14050.53		21223	4.0126	12578	14132			0.45	No, Vu<V
SLV 14	3.42	-45239	-31368	-3887.24		40265	4.0126	16250	18257			0.58	No, Vu<V
SLV 3	1.32	-4349	11379	253.33		3871	4.0126	9108	10233			0.9	No, Vu<V
SLV 3	3.42	-1013	12209	-22968.16		0	0	8333	0			0	No, Vu<V
SLV 12	1.32	1057	-9106	-20921.6		0	0	8333	0			0	No, Vu<V
SLV 12	3.42	-11700	-8920	-18546.01		33070	1.2635	14947	5288			0.59	No, Vu<V
SLV 11	1.32	1057	-9106	-20921.6		0	0	8333	0			0	No, Vu<V
SLV 11	3.42	-11700	-8920	-18546.01		33070	1.2635	14947	5288			0.59	No, Vu<V
SLV 13	1.32	-23844	-31116	-14050.53		21223	4.0126	12578	14132			0.45	No, Vu<V
SLV 13	3.42	-45239	-31368	-3887.24		40265	4.0126	16250	18257			0.58	No, Vu<V

Verifica a pressoflessione fuori piano D.M. 17-01-18 (N.T.C.)

quota 3.16 Wa 0.05 denominatore 8 γM = 2

Comb.	fd	Sa	σ0	N	M	Mc	Coeff.s.	Verifica
SLV 7	143750	0.31	0	112	370.74	0	0	No, Trazione
SLV 3	143750	0.31	0	-1337	370.74	0	0	No, e>t/2
SLV 4	143750	0.31	0	-1337	370.74	0	0	No, e>t/2
SLV 8	143750	0.31	0	112	370.74	0	0	No, Trazione
SLV 12	143750	0.31	7977	-8962	370.74	1172.78	3.16	Si
SLV 11	143750	0.31	7977	-8962	370.74	1172.78	3.16	Si
SLV 2	143750	0.31	10371	-11652	370.74	1492.85	4.03	Si
SLV 1	143750	0.31	10371	-11652	370.74	1492.85	4.03	Si
SLV 15	143750	0.31	28110	-31582	370.74	3404.34	9.18	Si
SLV 16	143750	0.31	28110	-31582	370.74	3404.34	9.18	Si

Verifica dei meccanismi locali di collasso con analisi cinematica lineare

forza di aggancio al piano = 0 quota mezzeria = 3.16 Wa = 0.05 Ta = 0.0808

Comb.	N top	N base	V orto	α0	M*	e*	a0*	aLim	Verifica
SLV 8	-16920	3920	-338	0	0	0	0	7.42296	No, Trazione
SLV 11	-22934	1057	-357	0	0	0	0	7.42296	No, Trazione
SLV 7	-16920	3920	-338	0	0	0	0	7.42296	No, Trazione
SLV 12	-22934	1057	-357	0	0	0	0	7.42296	No, Trazione
SLV 5	-33282	-29251	357	0.032	3971.7	0.957	0.48955	7.42296	No
SLV 6	-33282	-29251	357	0.032	3971.7	0.957	0.48955	7.42296	No
SLV 15	-35678	-13893	-137	0.038	4215.3	0.959	0.57841	8.50261	No
SLV 16	-35678	-13893	-137	0.038	4215.3	0.959	0.57841	8.50261	No
SLV 10	-39297	-32114	337	0.033	4583.3	0.962	0.506	7.42296	No
SLV 9	-39297	-32114	337	0.033	4583.3	0.962	0.506	7.42296	No

Tabella dei coefficienti di sicurezza minimi

Stato limite	Coeff.s.	Comb.	Verifica
PF_SLU	2.196	SLU 84	Si
V_SLU	0.567	SLU 83	No
PF_SLV	0	SLV 12	No
V_SLV	0	SLV 3	No
PFFP_SLV	0	SLV 8	No
R_SLV	0	SLV 12	No

Maschio 80

Verifiche condotte secondo D.M. 17-01-18 (N.T.C.)

Dati geometrici

X ini.	Y ini.	X fin.	Y fin.	Quota i.	Quota.s	l	Sp.	h netta	h ini.	h fin.	a	a.s.,sx	a.s.,dx
-10.74	3.3	-15.01	3.3	L3	L4	4.27	0.14	3.68	3.68	3.68			

Caratteristiche del materiale

(Circolare 7 21-01-19 C8.5.I) Muratura in mattoni pieni e malta di calce LC2_Corti

fb	fk	fvk0	fmedio	τ0	fv0	μ	ϕ	fv,lim	E	G	FC
600000			345000	9000	20000	0.58	0.77	32500	320000000	128000000	1.2

Verifica a pressoflessione nel piano secondo D.M. 17-01-18 NTC §7.8.2.2.1 in combinazioni non sismiche, γM = 3

Comb.	Quota	N	M	σ0	Mu	c.s.	Verifica
SLU 57	1.32	-54785	3901.61	91645	0	0	No, Rottura per schiacciamento
SLU 57	3.22	-47638	-5333.19	79689	2209.67	0.414	No, M>Mu
SLU 59	1.32	-54184	3870.78	90639	0	0	No, Rottura per schiacciamento
SLU 59	3.22	-47082	-5270.35	78759	3331.39	0.632	No, M>Mu
SLU 58	1.32	-54225	3882.95	90708	0	0	No, Rottura per schiacciamento
SLU 58	3.22	-47118	-5269.83	78819	3259.75	0.619	No, M>Mu

Comb.	Quota	N	M	σ0	Mu	c.s.	Verifica
SLU 62	1.32	-56108	3679.67	93858	0	0	No, Rottura per schiacciamento
SLU 62	3.22	-48965	-5548.19	81910	0	0	No, Rottura per schiacciamento
SLU 56	1.32	-54826	3913.78	91714	0	0	No, Rottura per schiacciamento
SLU 56	3.22	-47673	-5332.67	79749	2136.28	0.401	No, M>Mu
SLU 42	1.32	-53402	2872.4	89332	0	0	No, Rottura per schiacciamento
SLU 42	3.22	-47258	-5566.63	79053	2979.3	0.535	No, M>Mu
SLU 63	1.32	-56066	3667.49	93788	0	0	No, Rottura per schiacciamento
SLU 63	3.22	-48929	-5548.71	81850	0	0	No, Rottura per schiacciamento
SLU 60	1.32	-55198	3553.21	92336	0	0	No, Rottura per schiacciamento
SLU 60	3.22	-48163	-5455.92	80567	1125.45	0.206	No, M>Mu
SLU 61	1.32	-55156	3541.04	92266	0	0	No, Rottura per schiacciamento
SLU 61	3.22	-48127	-5456.45	80507	1200.38	0.22	No, M>Mu
SLU 55	1.32	-53246	3736.21	89070	0	0	No, Rottura per schiacciamento
SLU 55	3.22	-46255	-5178.43	77376	4949.45	0.956	No, M>Mu

Verifica a pressoflessione nel piano secondo D.M. 17-01-18 NTC §7.8.2.2.1 in combinazioni sismiche, γM = 2

Comb.	Quota	N	M	σ0	Mu	c.s.	Verifica
SLV 16	1.32	-44157	-15929.58	73867	37282.51	2.34	Si
SLV 16	3.22	-35428	-5561.92	59264	38951.69	7.003	Si
SLV 13	1.32	-46759	-14529.24	78218	35923.59	2.473	Si
SLV 13	3.22	-37316	-6315.12	62423	38968.19	6.171	Si
SLV 6	1.32	-43488	10692.94	72747	37568.3	3.513	Si
SLV 6	3.22	-38045	-4576.09	63642	38918.83	8.505	Si
SLV 1	1.32	-37057	21760.68	61990	38978.26	1.791	Si
SLV 1	3.22	-35048	-2287.81	58628	38923.16	17.013	Si
SLV 2	1.32	-37057	21760.68	61990	38978.26	1.791	Si
SLV 2	3.22	-35048	-2287.81	58628	38923.16	17.013	Si
SLV 14	1.32	-46759	-14529.24	78218	35923.59	2.473	Si
SLV 14	3.22	-37316	-6315.12	62423	38968.19	6.171	Si
SLV 3	1.32	-34456	20360.34	57638	38861.93	1.909	Si
SLV 3	3.22	-33160	-1534.61	55470	38656.28	25.19	Si
SLV 5	1.32	-43488	10692.94	72747	37568.3	3.513	Si
SLV 5	3.22	-38045	-4576.09	63642	38918.83	8.505	Si
SLV 15	1.32	-44157	-15929.58	73867	37282.51	2.34	Si
SLV 15	3.22	-35428	-5561.92	59264	38951.69	7.003	Si
SLV 4	1.32	-34456	20360.34	57638	38861.93	1.909	Si
SLV 4	3.22	-33160	-1534.61	55470	38656.28	25.19	Si

Verifica a taglio nel piano secondo D.M. 17-01-18 (N.T.C.) §7.8.2.2.2 con rottura per scorrimento in combinazioni non sismiche, γM = 3

Comb.	Quota	N	V par	M	σ0	σN	I'	fvd	Vt scorr.	Vt fess.diag.	Vt,lim	c.s.	Verifica
SLU 74	1.32	-60188	-350	3853.79		100684	4.27	10833	6476			18.5	Si
SLU 74	3.22	-52729	-161	-6025.28		88206	4.27	10833	6476			40.31	Si
SLU 81	1.32	-61470	-351	3619.67		102827	4.27	10833	6476			18.45	Si
SLU 81	3.22	-54021	-158	-6240.8		90367	4.27	10833	6476			41.09	Si
SLU 78	1.32	-61057	-357	3968.07		102136	4.27	10833	6476			18.14	Si
SLU 78	3.22	-53496	-165	-6118.07		89489	4.27	10833	6476			39.3	Si
SLU 75	1.32	-60147	-350	3841.61		100614	4.27	10833	6476			18.52	Si
SLU 75	3.22	-52693	-160	-6025.8		88146	4.27	10833	6476			40.36	Si
SLU 84	1.32	-62338	-358	3733.95		104280	4.27	10833	6476			18.1	Si
SLU 84	3.22	-54788	-162	-6333.59		91650	4.27	10833	6476			40.03	Si
SLU 82	1.32	-61428	-351	3607.5		102758	4.27	10833	6476			18.47	Si
SLU 82	3.22	-53985	-157	-6241.32		90307	4.27	10833	6476			41.14	Si
SLU 77	1.32	-61098	-357	3980.24		102206	4.27	10833	6476			18.12	Si
SLU 77	3.22	-53532	-165	-6117.55		89549	4.27	10833	6476			39.25	Si
SLU 83	1.32	-62380	-358	3746.12		104349	4.27	10833	6476			18.08	Si
SLU 83	3.22	-54824	-162	-6333.07		91710	4.27	10833	6476			39.98	Si
SLU 79	1.32	-60497	-354	3949.41		101200	4.27	10833	6476			18.27	Si
SLU 79	3.22	-52976	-164	-6054.7		88619	4.27	10833	6476			39.55	Si
SLU 80	1.32	-60455	-354	3937.24		101130	4.27	10833	6476			18.29	Si
SLU 80	3.22	-52940	-164	-6055.22		88559	4.27	10833	6476			39.6	Si

Verifica a taglio nel piano secondo D.M. 17-01-18 (N.T.C.) §7.8.2.2.2 con rottura per scorrimento in combinazioni sismiche, γM = 2

Comb.	Quota	N	V par	M	σ0	σN	I'	fvd	Vt scorr.	Vt fess.diag.	Vt,lim	c.s.	Verifica
SLV 4	1.32	-34456	12373	20360.34		57638	4.27	16250	9714			0.79	No, Vu<V
SLV 4	3.22	-33160	12587	-1534.61		55470	4.27	16250	9714			0.77	No, Vu<V
SLV 15	1.32	-44157	-12834	-15929.58		73867	4.27	16250	9714			0.76	No, Vu<V
SLV 15	3.22	-35428	-12844	-5561.92		59264	4.27	16250	9714			0.76	No, Vu<V
SLV 14	1.32	-46759	-12858	-14529.24		78218	4.27	16250	9714			0.76	No, Vu<V
SLV 14	3.22	-37316	-12815	-6315.12		62423	4.27	16250	9714			0.76	No, Vu<V
SLV 1	1.32	-37057	12350	21760.68		61990	4.27	16250	9714			0.79	No, Vu<V
SLV 1	3.22	-35048	12616	-2287.81		58628	4.27	16250	9714			0.77	No, Vu<V
SLV 16	1.32	-44157	-12834	-15929.58		73867	4.27	16250	9714			0.76	No, Vu<V
SLV 16	3.22	-35428	-12844	-5561.92		59264	4.27	16250	9714			0.76	No, Vu<V
SLV 10	1.32	-46398	-4062	-194.03		77615	4.27	16250	9714			2.39	Si
SLV 10	3.22	-38725	-3881	-5784.29		64780	4.27	16250	9714			2.5	Si
SLV 2	1.32	-37057	12350	21760.68		61990	4.27	16250	9714			0.79	No, Vu<V
SLV 2	3.22	-35048	12616	-2287.81		58628	4.27	16250	9714			0.77	No, Vu<V
SLV 13	1.32	-46759	-12858	-14529.24		78218	4.27	16250	9714			0.76	No, Vu<V
SLV 13	3.22	-37316	-12815	-6315.12		62423	4.27	16250	9714			0.76	No, Vu<V
SLV 9	1.32	-46398	-4062	-194.03		77615	4.27	16250	9714			2.39	Si
SLV 9	3.22	-38725	-3881	-5784.29		64780	4.27	16250	9714			2.5	Si

Comb.	Quota	N	V par	M	σ0	σN	l'	fvd	Vt scorr.	Vt fess.diag.	Vt,lim	c.s.	Verifica
SLV 3	1.32	-34456	12373	20360.34		57638	4.27	16250	9714			0.79	No, Vu<V
SLV 3	3.22	-33160	12587	-1534.61		55470	4.27	16250	9714			0.77	No, Vu<V

Verifica a pressoflessione fuori piano D.M. 17-01-18 (N.T.C.)

quota 3.16 Wa 0.03 denominatore 8 γM = 2

Comb.	fd	Sa	σ0	N	M	Mc	Coeff.s.	Verifica
SLV 8	143750	0.31	53219	-31814	188.29	1257.02	6.68	Si
SLV 7	143750	0.31	53219	-31814	188.29	1257.02	6.68	Si
SLV 11	143750	0.31	54369	-32501	188.29	1262.77	6.71	Si
SLV 12	143750	0.31	54369	-32501	188.29	1262.77	6.71	Si
SLV 4	143750	0.31	55569	-33219	188.29	1267.8	6.73	Si
SLV 3	143750	0.31	55569	-33219	188.29	1267.8	6.73	Si
SLV 10	143750	0.31	64915	-38806	188.29	1273.26	6.76	Si
SLV 9	143750	0.31	64915	-38806	188.29	1273.26	6.76	Si
SLV 5	143750	0.31	63765	-38119	188.29	1275.81	6.78	Si
SLV 6	143750	0.31	63765	-38119	188.29	1275.81	6.78	Si

Verifica dei meccanismi locali di collasso con analisi cinematica lineare

forza di aggancio al piano = 0 quota mezzeria = 3.16 Wa = 0.03 Ta = 0.1615

Comb.	N top	N base	V orto	α0	M*	e*	a0*	aLim	Verifica
SLV 5	-29350	-43488	61	0.018	3297.9	0.971	0.27363	14.13539	No
SLV 6	-29350	-43488	61	0.018	3297.9	0.971	0.27363	14.13539	No
SLV 12	-29936	-37727	-60	0.018	3357.5	0.972	0.27382	14.13539	No
SLV 11	-29936	-37727	-60	0.018	3357.5	0.972	0.27382	14.13539	No
SLV 9	-30740	-46398	53	0.019	3439.5	0.972	0.27742	14.13539	No
SLV 10	-30740	-46398	53	0.019	3439.5	0.972	0.27742	14.13539	No
SLV 8	-28545	-34817	-52	0.019	3215.9	0.971	0.27757	14.13539	No
SLV 7	-28545	-34817	-52	0.019	3215.9	0.971	0.27757	14.13539	No
SLV 15	-31840	-44157	-30	0.019	3551.4	0.973	0.28741	14.13539	No
SLV 16	-31840	-44157	-30	0.019	3551.4	0.973	0.28741	14.13539	No

Tabella dei coefficienti di sicurezza minimi

Stato limite	Coeff.s.	Comb.	Verifica
PF_SLU	0	SLU 31	No
V_SLU	18.077	SLU 83	Si
PF_SLV	1.791	SLV 1	Si
V_SLV	0.756	SLV 13	No
PFFP_SLV	6.676	SLV 7	Si
R_SLV	0.019	SLV 5	No

Maschio 81

Verifiche condotte secondo D.M. 17-01-18 (N.T.C.)

Dati geometrici

X ini.	Y ini.	X fin.	Y fin.	Quota i.	Quota.s	l	Sp.	h netta	h ini.	h fin.	a	a.s.,sx	a.s.,dx
-9.72	3.3	-9.94	3.3	L3	L4	0.22	0.14	3.68	3.68	3.68			

Caratteristiche del materiale

(Circolare 7 21-01-19 C8.5.I) Muratura in mattoni pieni e malta di calce LC2_Corti

fb	fk	fvk0	fmedio	τ0	fv0	μ	ϕ	fv,lim	E	G	FC
600000			345000	9000	20000	0.58	0.77	32500	320000000	128000000	1.2

Verifica a pressoflessione nel piano secondo D.M. 17-01-18 NTC §7.8.2.2.1 in combinazioni non sismiche, γM = 3

Comb.	Quota	N	M	σ0	Mu	c.s.	Verifica
SLU 42	1.32	-3359	-16.07	109070	0	0	No, Rottura per schiacciamento
SLU 42	3.22	-2529	-17.43	82104	0	0	No, Rottura per schiacciamento
SLU 56	1.32	-3540	-9.54	114941	0	0	No, Rottura per schiacciamento
SLU 56	3.22	-2481	-24.9	80560	3.01	0.121	No, M>Mu
SLU 59	1.32	-3502	-9.4	113694	0	0	No, Rottura per schiacciamento
SLU 59	3.22	-2451	-24.71	79578	6.22	0.252	No, M>Mu
SLU 54	1.32	-3463	-9.99	112446	0	0	No, Rottura per schiacciamento
SLU 54	3.22	-2441	-23.75	79269	7.22	0.304	No, M>Mu
SLU 60	1.32	-3511	-12.64	113987	0	0	No, Rottura per schiacciamento
SLU 60	3.22	-2533	-21.84	82225	0	0	No, Rottura per schiacciamento
SLU 58	1.32	-3505	-9.36	113790	0	0	No, Rottura per schiacciamento
SLU 58	3.22	-2452	-24.76	79612	6.11	0.247	No, M>Mu
SLU 53	1.32	-3466	-9.96	112542	0	0	No, Rottura per schiacciamento
SLU 53	3.22	-2443	-23.8	79303	7.11	0.299	No, M>Mu
SLU 61	1.32	-3508	-12.68	113891	0	0	No, Rottura per schiacciamento
SLU 61	3.22	-2531	-21.79	82191	0	0	No, Rottura per schiacciamento
SLU 55	1.32	-3426	-9.84	111231	0	0	No, Rottura per schiacciamento
SLU 55	3.22	-2412	-23.58	78298	10.29	0.437	No, M>Mu
SLU 57	1.32	-3537	-9.58	114845	0	0	No, Rottura per schiacciamento

Comb.	Quota	N	M	σ0	Mu	c.s.	Verifica
SLU 57	3.22	-2480	-24.85	80527	3.12	0.126	No, M>Mu

Verifica a pressoflessione nel piano secondo D.M. 17-01-18 NTC §7.8.2.2.1 in combinazioni sismiche, γM = 2

Comb.	Quota	N	M	σ0	Mu	c.s.	Verifica
SLV 3	1.32	-3296	77.99	107000	45.06	0.578	No, M>Mu
SLV 3	3.22	-265	-94.4	0	0	0	No, e>l/2
SLV 14	1.32	-1930	-92.39	62661	103.42	1.119	Si
SLV 14	3.22	-3398	57.91	110327	36.28	0.627	No, M>Mu
SLV 13	1.32	-1930	-92.39	62661	103.42	1.119	Si
SLV 13	3.22	-3398	57.91	110327	36.28	0.627	No, M>Mu
SLV 4	1.32	-3296	77.99	107000	45.06	0.578	No, M>Mu
SLV 4	3.22	-265	-94.4	0	0	0	No, e>l/2
SLV 16	1.32	-1607	-102.86	52171	101.29	0.985	No, M>Mu
SLV 16	3.22	-3452	77.87	112072	31.43	0.404	No, M>Mu
SLV 1	1.32	-3619	88.46	117490	15.3	0.173	No, M>Mu
SLV 1	3.22	-212	-114.36	0	0	0	No, e>l/2
SLV 2	1.32	-3619	88.46	117490	15.3	0.173	No, M>Mu
SLV 2	3.22	-212	-114.36	0	0	0	No, e>l/2
SLV 15	1.32	-1607	-102.86	52171	101.29	0.985	No, M>Mu
SLV 15	3.22	-3452	77.87	112072	31.43	0.404	No, M>Mu
SLV 5	1.32	-3405	37.38	110538	35.71	0.955	No, M>Mu
SLV 5	3.22	-1264	-77.36	41045	92.35	1.194	Si
SLV 6	1.32	-3405	37.38	110538	35.71	0.955	No, M>Mu
SLV 6	3.22	-1264	-77.36	41045	92.35	1.194	Si

Verifica a taglio nel piano secondo D.M. 17-01-18 (N.T.C.) §7.8.2.2.2 con rottura per scorrimento in combinazioni non sismiche, γM = 3

Comb.	Quota	N	V par	M	σ0	σN	l'	fvd	Vt scorr.	Vt fess.diag.	Vt,lim	c.s.	Verifica
SLU 84	1.32	-3953	-156	-16.09		128351	0.22	10833	334			2.14	Si
SLU 84	3.22	-2904	151	-23		94279	0.22	10833	334			2.21	Si
SLU 79	1.32	-3876	-145	-13.2		125851	0.22	10833	334			2.3	Si
SLU 79	3.22	-2786	154	-24.88		90442	0.22	10833	334			2.17	Si
SLU 80	1.32	-3873	-145	-13.23		125755	0.22	10833	334			2.3	Si
SLU 80	3.22	-2785	153	-24.82		90408	0.22	10833	334			2.18	Si
SLU 83	1.32	-3956	-156	-16.06		128447	0.22	10833	334			2.14	Si
SLU 83	3.22	-2905	151	-23.05		94313	0.22	10833	334			2.2	Si
SLU 82	1.32	-3879	-155	-16.51		125952	0.22	10833	334			2.15	Si
SLU 82	3.22	-2865	147	-21.91		93022	0.22	10833	334			2.27	Si
SLU 78	1.32	-3909	-146	-13.41		126906	0.22	10833	334			2.28	Si
SLU 78	3.22	-2814	155	-24.96		91357	0.22	10833	334			2.16	Si
SLU 74	1.32	-3838	-146	-13.8		124603	0.22	10833	334			2.29	Si
SLU 74	3.22	-2776	150	-23.92		90134	0.22	10833	334			2.22	Si
SLU 77	1.32	-3912	-146	-13.38		127002	0.22	10833	334			2.28	Si
SLU 77	3.22	-2815	155	-25.01		91391	0.22	10833	334			2.16	Si
SLU 75	1.32	-3835	-146	-13.83		124507	0.22	10833	334			2.29	Si
SLU 75	3.22	-2775	150	-23.87		90100	0.22	10833	334			2.22	Si
SLU 81	1.32	-3882	-155	-16.48		126048	0.22	10833	334			2.15	Si
SLU 81	3.22	-2866	147	-21.96		93055	0.22	10833	334			2.27	Si

Verifica a taglio nel piano secondo D.M. 17-01-18 (N.T.C.) §7.8.2.2.2 con rottura per scorrimento in combinazioni sismiche, γM = 2

Comb.	Quota	N	V par	M	σ0	σN	l'	fvd	Vt scorr.	Vt fess.diag.	Vt,lim	c.s.	Verifica
SLV 2	1.32	-3619	190	88.46		117490	0.22	16250	501			2.64	Si
SLV 2	3.22	-212	357	-114.36		0	0	8333	0			0	No, Vu<V
SLV 5	1.32	-3405	34	37.38		110538	0.22	16250	501			14.71	Si
SLV 5	3.22	-1264	247	-77.36		61670	0.1464	16250	333			1.35	Si
SLV 16	1.32	-1607	-375	-102.86		83193	0.138	16250	314			0.84	No, Vu<V
SLV 16	3.22	-3452	-144	77.87		112072	0.22	16250	501			3.49	Si
SLV 6	1.32	-3405	34	37.38		110538	0.22	16250	501			14.71	Si
SLV 6	3.22	-1264	247	-77.36		61670	0.1464	16250	333			1.35	Si
SLV 4	1.32	-3296	162	77.99		107000	0.22	16250	501			3.09	Si
SLV 4	3.22	-265	313	-94.4		0	0	8333	0			0	No, Vu<V
SLV 14	1.32	-1930	-347	-92.39		73959	0.1864	16250	424			1.22	Si
SLV 14	3.22	-3398	-100	57.91		110327	0.22	16250	501			4.99	Si
SLV 1	1.32	-3619	190	88.46		117490	0.22	16250	501			2.64	Si
SLV 1	3.22	-212	357	-114.36		0	0	8333	0			0	No, Vu<V
SLV 15	1.32	-1607	-375	-102.86		83193	0.138	16250	314			0.84	No, Vu<V
SLV 15	3.22	-3452	-144	77.87		112072	0.22	16250	501			3.49	Si
SLV 13	1.32	-1930	-347	-92.39		73959	0.1864	16250	424			1.22	Si
SLV 13	3.22	-3398	-100	57.91		110327	0.22	16250	501			4.99	Si
SLV 3	1.32	-3296	162	77.99		107000	0.22	16250	501			3.09	Si
SLV 3	3.22	-265	313	-94.4		0	0	8333	0			0	No, Vu<V

Verifica a pressoflessione fuori piano D.M. 17-01-18 (N.T.C.)

quota 3.16 Wa 0.03 denominatore 8 γM = 2

Comb.	fd	Sa	σ0	N	M	Mc	Coeff.s.	Verifica
SLV 2	143750	0.31	6872	-212	9.7	13.98	1.44	Si
SLV 1	143750	0.31	6872	-212	9.7	13.98	1.44	Si
SLV 4	143750	0.31	8617	-265	9.7	17.27	1.78	Si
SLV 3	143750	0.31	8617	-265	9.7	17.27	1.78	Si
SLV 15	143750	0.31	112072	-3452	9.7	20	2.06	Si
SLV 16	143750	0.31	112072	-3452	9.7	20	2.06	Si
SLV 14	143750	0.31	110327	-3398	9.7	23.09	2.38	Si
SLV 13	143750	0.31	110327	-3398	9.7	23.09	2.38	Si
SLV 6	143750	0.31	41045	-1264	9.7	58.77	6.06	Si
SLV 5	143750	0.31	41045	-1264	9.7	58.77	6.06	Si

Verifica dei meccanismi locali di collasso con analisi cinematica lineare

forza di aggancio al piano = 0 quota mezzeria = 3.16 Wa = 0.03 Ta = 0.1615

Comb.	N top	N base	V orto	α0	M*	e*	a0*	aLim	Verifica
SLV 16	-783	-1607	-4	0.017	95.7	0.951	0.25849	14.13539	No

Comb.	N top	N base	V orto	α0	M*	e*	a0*	aLim	Verifica
SLV 15	-783	-1607	-4	0.017	95.7	0.951	0.25849	14.13539	No
SLV 1	-1559	-3619	4	0.018	174.7	0.972	0.26805	14.13539	No
SLV 2	-1559	-3619	4	0.018	174.7	0.972	0.26805	14.13539	No
SLV 12	-1065	-1821	-3	0.018	124.4	0.962	0.26963	14.13539	No
SLV 11	-1065	-1821	-3	0.018	124.4	0.962	0.26963	14.13539	No
SLV 5	-1277	-3405	3	0.018	146	0.967	0.27132	14.13539	No
SLV 6	-1277	-3405	3	0.018	146	0.967	0.27132	14.13539	No
SLV 3	-1566	-3296	2	0.019	175.4	0.972	0.28088	14.13539	No
SLV 4	-1566	-3296	2	0.019	175.4	0.972	0.28088	14.13539	No

Tabella dei coefficienti di sicurezza minimi

Stato limite	Coeff.s.	Comb.	Verifica
PF_SLU	0	SLU 3	No
V_SLU	2.143	SLU 84	Si
PF_SLV	0	SLV 1	No
V_SLV	0	SLV 1	No
PFFP_SLV	1.441	SLV 1	Si
R_SLV	0.018	SLV 15	No

Maschio 82

Verifiche condotte secondo D.M. 17-01-18 (N.T.C.)

Dati geometrici

X ini.	Y ini.	X fin.	Y fin.	Quota i.	Quota.s	l	Sp.	h netta	h ini.	h fin.	a	a.s.,sx	a.s.,dx
-11.003	-4.697	-11.003	-3.309	L3	Z medio 333 cm	1.388	0.28	2.01	2.01	2.01			

Caratteristiche del materiale

(Circolare 7 21-01-19 C8.5.I) Muratura in mattoni pieni e malta di calce LC2_Corti

fb	fk	fvk0	fmedio	τ0	fv0	μ	ϕ	fv,lim	E	G	FC
600000			345000	9000	20000	0.58	0.77	32500	320000000	128000000	1.2

Verifica a pressoflessione nel piano secondo D.M. 17-01-18 NTC §7.8.2.2.1 in combinazioni non sismiche, γM = 3

Comb.	Quota	N	M	σ0	Mu	c.s.	Verifica
SLU 82	1.32	-26809	404.07	68997	2845.52	7.042	Si
SLU 82	3.33	-20666	1009.38	53189	4976.32	4.93	Si
SLU 83	1.32	-27278	340.92	70204	2614.86	7.67	Si
SLU 83	3.33	-21033	1038.15	54131	4895.65	4.716	Si
SLU 80	1.32	-26241	389.25	67536	3111.8	7.994	Si
SLU 80	3.33	-20238	924.16	52085	5063.34	5.479	Si
SLU 74	1.32	-26397	308.94	67937	3040.2	9.841	Si
SLU 74	3.33	-20303	948.8	52253	5050.6	5.323	Si
SLU 79	1.32	-26498	313.98	68198	2993.01	9.532	Si
SLU 79	3.33	-20410	945.63	52530	5029.25	5.318	Si
SLU 78	1.32	-26352	396.33	67821	3061	7.723	Si
SLU 78	3.33	-20323	934.65	52306	5046.56	5.399	Si
SLU 81	1.32	-27066	328.8	69658	2720.33	8.273	Si
SLU 81	3.33	-20839	1030.84	53634	4938.98	4.791	Si
SLU 77	1.32	-26609	321.06	68482	2940.96	9.16	Si
SLU 77	3.33	-20496	956.11	52751	5011.82	5.242	Si
SLU 84	1.32	-27021	416.19	69543	2742.44	6.589	Si
SLU 84	3.33	-20860	1016.69	53686	4934.45	4.853	Si
SLU 75	1.32	-26140	384.21	67275	3157.86	8.219	Si
SLU 75	3.33	-20130	927.34	51808	5083.87	5.482	Si

Verifica a pressoflessione nel piano secondo D.M. 17-01-18 NTC §7.8.2.2.1 in combinazioni sismiche, γM = 2

Comb.	Quota	N	M	σ0	Mu	c.s.	Verifica
SLV 10	1.32	-29803	-1399.47	76704	7697.51	5.5	Si
SLV 10	3.33	-22631	528.86	58245	8217.25	15.538	Si
SLV 7	1.32	-7283	1723.2	18744	4278.12	2.483	Si
SLV 7	3.33	-5715	623.55	14708	3487.89	5.594	Si
SLV 8	1.32	-7283	1723.2	18744	4278.12	2.483	Si
SLV 8	3.33	-5715	623.55	14708	3487.89	5.594	Si
SLV 9	1.32	-29803	-1399.47	76704	7697.51	5.5	Si
SLV 9	3.33	-22631	528.86	58245	8217.25	15.538	Si
SLV 1	1.32	-22548	200.32	58031	8214.46	41.006	Si
SLV 1	3.33	-14970	1428.16	38529	7111.7	4.98	Si
SLV 4	1.32	-15688	1053.42	40377	7288.22	6.919	Si
SLV 4	3.33	-10183	1313.53	26207	5549.83	4.225	Si
SLV 11	1.32	-6938	1444.2	17857	4110.44	2.846	Si
SLV 11	3.33	-6673	146.77	17173	3979.09	27.111	Si
SLV 12	1.32	-6938	1444.2	17857	4110.44	2.846	Si
SLV 12	3.33	-6673	146.77	17173	3979.09	27.111	Si
SLV 2	1.32	-22548	200.32	58031	8214.46	41.006	Si
SLV 2	3.33	-14970	1428.16	38529	7111.7	4.98	Si
SLV 3	1.32	-15688	1053.42	40377	7288.22	6.919	Si
SLV 3	3.33	-10183	1313.53	26207	5549.83	4.225	Si

Verifica a taglio nel piano secondo D.M. 17-01-18 (N.T.C.) §7.8.2.2.2 con rottura per scorrimento in combinazioni non sismiche, γM = 3

Comb.	Quota	N	V par	M	σ0	σN	l'	fvd	Vt scorr.	Vt fess.diag.	Vt,lim	c.s.	Verifica
SLU 77	1.32	-26609	-3708	321.06		68482	1.3877	10833	4209			1.14	Si
SLU 77	3.33	-20496	-1582	956.11		52751	1.3877	10833	4209			2.66	Si
SLU 83	1.32	-27278	-3819	340.92		70204	1.3877	10833	4209			1.1	Si
SLU 83	3.33	-21033	-1713	1038.15		54131	1.3877	10833	4209			2.46	Si
SLU 79	1.32	-26498	-3679	313.98		68198	1.3877	10833	4209			1.14	Si

Comb.	Quota	N	V par	M	σ0	σN	I'	fvd	Vt scorr.	Vt fess.diag.	Vt,lim	c.s.	Verifica
SLU 79	3.33	-20410	-1569	945.63		52530	1.3877	10833	4209			2.68	Si
SLU 78	1.32	-26352	-3476	396.33		67821	1.3877	10833	4209			1.21	Si
SLU 78	3.33	-20323	-1377	934.65		52306	1.3877	10833	4209			3.06	Si
SLU 62	1.32	-25480	-3515	263.76		65578	1.3877	10833	4209			1.2	Si
SLU 62	3.33	-19625	-1582	913.86		50508	1.3877	10833	4209			2.66	Si
SLU 60	1.32	-25268	-3495	251.64		65033	1.3877	10833	4209			1.2	Si
SLU 60	3.33	-19431	-1610	906.55		50010	1.3877	10833	4209			2.61	Si
SLU 84	1.32	-27021	-3586	416.19		69543	1.3877	10833	4209			1.17	Si
SLU 84	3.33	-20860	-1507	1016.69		53686	1.3877	10833	4209			2.79	Si
SLU 82	1.32	-26809	-3566	404.07		68997	1.3877	10833	4209			1.18	Si
SLU 82	3.33	-20666	-1535	1009.38		53189	1.3877	10833	4209			2.74	Si
SLU 81	1.32	-27066	-3799	328.8		69658	1.3877	10833	4209			1.11	Si
SLU 81	3.33	-20839	-1741	1030.84		53634	1.3877	10833	4209			2.42	Si
SLU 74	1.32	-26397	-3688	308.94		67937	1.3877	10833	4209			1.14	Si
SLU 74	3.33	-20303	-1610	948.8		52253	1.3877	10833	4209			2.61	Si

Verifica a taglio nel piano secondo D.M. 17-01-18 (N.T.C.) §7.8.2.2.2 con rottura per scorrimento in combinazioni sismiche, γM = 2

Comb.	Quota	N	V par	M	σ0	σN	I'	fvd	Vt scorr.	Vt fess.diag.	Vt,lim	c.s.	Verifica
SLV 2	1.32	-22548	-6621	200.32		58031	1.3877	16250	6314			0.95	No, Vu<V
SLV 2	3.33	-14970	-4802	1428.16		38529	1.3877	16039	6232			1.3	Si
SLV 11	1.32	-6938	3719	1444.2		17857	1.3877	11905	4626			1.24	Si
SLV 11	3.33	-6673	4454	146.77		17173	1.3877	11768	4572			1.03	Si
SLV 9	1.32	-29803	-7384	-1399.47		76704	1.3877	16250	6314			0.86	No, Vu<V
SLV 9	3.33	-22631	-5290	528.86		58245	1.3877	16250	6314			1.19	Si
SLV 10	1.32	-29803	-7384	-1399.47		76704	1.3877	16250	6314			0.86	No, Vu<V
SLV 10	3.33	-22631	-5290	528.86		58245	1.3877	16250	6314			1.19	Si
SLV 12	1.32	-6938	3719	1444.2		17857	1.3877	11905	4626			1.24	Si
SLV 12	3.33	-6673	4454	146.77		17173	1.3877	11768	4572			1.03	Si
SLV 7	1.32	-7283	2277	1723.2		18963	1.3717	12126	4657			2.05	Si
SLV 7	3.33	-5715	3106	623.55		14708	1.3877	11275	4381			1.41	Si
SLV 6	1.32	-30148	-8826	-1120.47		77592	1.3877	16250	6314			0.72	No, Vu<V
SLV 6	3.33	-21673	-6639	1005.64		55780	1.3877	16250	6314			0.95	No, Vu<V
SLV 1	1.32	-22548	-6621	200.32		58031	1.3877	16250	6314			0.95	No, Vu<V
SLV 1	3.33	-14970	-4802	1428.16		38529	1.3877	16039	6232			1.3	Si
SLV 8	1.32	-7283	2277	1723.2		18963	1.3717	12126	4657			2.05	Si
SLV 8	3.33	-5715	3106	623.55		14708	1.3877	11275	4381			1.41	Si
SLV 5	1.32	-30148	-8826	-1120.47		77592	1.3877	16250	6314			0.72	No, Vu<V
SLV 5	3.33	-21673	-6639	1005.64		55780	1.3877	16250	6314			0.95	No, Vu<V

Verifica a pressoflessione fuori piano D.M. 17-01-18 (N.T.C.)

quota 2.325 Wa 0.05 denominatore 8 γM = 2

Comb.	fd	Sa	σ0	N	M	Mc	Coeff.s.	Verifica
SLV 8	143750	0.29	14837	-5765	36.11	709.08	19.64	Si
SLV 7	143750	0.29	14837	-5765	36.11	709.08	19.64	Si
SLV 11	143750	0.29	16136	-6270	36.11	761.83	21.1	Si
SLV 12	143750	0.29	16136	-6270	36.11	761.83	21.1	Si
SLV 3	143750	0.29	31021	-12053	36.11	1259.05	34.87	Si
SLV 4	143750	0.29	31021	-12053	36.11	1259.05	34.87	Si
SLV 15	143750	0.29	35352	-13736	36.11	1366.66	37.85	Si
SLV 16	143750	0.29	35352	-13736	36.11	1366.66	37.85	Si
SLV 2	143750	0.29	46193	-17948	36.11	1562.81	43.28	Si
SLV 1	143750	0.29	46193	-17948	36.11	1562.81	43.28	Si

Verifica dei meccanismi locali di collasso con analisi cinematica lineare

forza di aggancio al piano = 0 quota mezzeria = 2.325 Wa = 0.05 Ta = 0.0241

Comb.	N top	N base	V orto	α0	M*	e*	a0*	aLim	Verifica
SLV 9	-22631	-29803	-146	0.065	2415	0.986	0.96551	3.52744	No
SLV 10	-22631	-29803	-146	0.065	2415	0.986	0.96551	3.52744	No
SLV 8	-5715	-7283	88	0.064	692.1	0.954	0.96995	3.52744	No
SLV 7	-5715	-7283	88	0.064	692.1	0.954	0.96995	3.52744	No
SLV 6	-21673	-30148	-136	0.066	2317.3	0.985	0.97022	3.52744	No
SLV 5	-21673	-30148	-136	0.066	2317.3	0.985	0.97022	3.52744	No
SLV 14	-18163	-21398	-80	0.068	1959.7	0.982	1.00605	3.65698	No
SLV 13	-18163	-21398	-80	0.068	1959.7	0.982	1.00605	3.65698	No
SLV 11	-6673	-6938	77	0.066	789.5	0.959	0.99765	3.52744	No
SLV 12	-6673	-6938	77	0.066	789.5	0.959	0.99765	3.52744	No

Tabella dei coefficienti di sicurezza minimi

Stato limite	Coeff.s.	Comb.	Verifica
PF_SLU	4.716	SLU 83	Si
V_SLU	1.102	SLU 83	Si
PF_SLV	2.483	SLV 7	Si
V_SLV	0.715	SLV 5	No
PFFP_SLV	19.639	SLV 7	Si
R_SLV	0.274	SLV 9	No

Maschio 83

Verifiche condotte secondo D.M. 17-01-18 (N.T.C.)

Dati geometrici

X ini.	Y ini.	X fin.	Y fin.	Quota i.	Quota.s	l	Sp.	h netta	h ini.	h fin.	a	a.s.,sx	a.s.,dx
-11.003	-4.697	-11.003	-3.309	Z medio 333 cm	L4	1.388	0.28	1.67	1.67	1.67			

Caratteristiche del materiale

(Circolare 7 21-01-19 C8.5.I) Muratura in mattoni pieni e malta di calce LC2_Corti

fb	fk	fvk0	fmedio	τ0	fv0	μ	ϕ	fv,lim	E	G	FC
600000			345000	9000	20000	0.58	0.77	32500	320000000	128000000	1.2

Verifica a pressoflessione nel piano secondo D.M. 17-01-18 NTC §7.8.2.2.1 in combinazioni non sismiche, γM = 3

Comb.	Quota	N	M	σ0	Mu	c.s.	Verifica
SLU 77	3.33	-19259	-24.7	49566	5231.66	211.797	Si
SLU 77	5	-16767	469.38	43152	5470.67	11.655	Si
SLU 39	3.33	-16053	-86.45	41316	5488.96	63.491	Si
SLU 39	5	-14041	447.99	36137	5420.32	12.099	Si
SLU 74	3.33	-19066	-42.8	49069	5259.93	122.903	Si
SLU 74	5	-16574	473.34	42657	5477.8	11.573	Si
SLU 84	3.33	-19459	-30.54	50080	5200.72	170.3	Si
SLU 84	5	-16997	485.44	43745	5460	11.248	Si
SLU 83	3.33	-19613	-79.86	50477	5175.61	64.81	Si
SLU 83	5	-17092	497.39	43989	5454.94	10.967	Si
SLU 79	3.33	-19174	-31.01	49348	5244.23	169.098	Si
SLU 79	5	-16684	458.21	42938	5473.95	11.946	Si
SLU 75	3.33	-18911	6.52	48671	5281.33	809.797	Si
SLU 75	5	-16480	461.39	42414	5480.71	11.879	Si
SLU 78	3.33	-19104	24.62	49169	5254.38	213.438	Si
SLU 78	5	-16672	457.43	42909	5474.38	11.968	Si
SLU 81	3.33	-19420	-97.95	49980	5206.87	53.156	Si
SLU 81	5	-16899	501.35	43493	5464.81	10.9	Si
SLU 82	3.33	-19265	-48.63	49583	5230.68	107.55	Si
SLU 82	5	-16805	489.4	43250	5469.07	11.175	Si

Verifica a pressoflessione nel piano secondo D.M. 17-01-18 NTC §7.8.2.2.1 in combinazioni sismiche, γM = 2

Comb.	Quota	N	M	σ0	Mu	c.s.	Verifica
SLV 9	3.33	-21946	-1154.07	56481	8188.2	7.095	Si
SLV 9	5	-17944	249.09	46182	7744.56	31.091	Si
SLV 11	3.33	-6308	1022	16233	3794.96	3.713	Si
SLV 11	5	-5930	-221.55	15262	3600.51	16.251	Si
SLV 3	3.33	-8892	448.67	22885	5013.99	11.175	Si
SLV 3	5	-8685	1197.24	22352	4923.52	4.112	Si
SLV 2	3.33	-13583	-204.15	34959	6728.12	32.956	Si
SLV 2	5	-12289	1338.43	31628	6319.51	4.722	Si
SLV 1	3.33	-13583	-204.15	34959	6728.12	32.956	Si
SLV 1	5	-12289	1338.43	31628	6319.51	4.722	Si
SLV 7	3.33	-4974	1108.91	12802	3089.65	2.786	Si
SLV 7	5	-5261	357.25	13539	3245.59	9.085	Si
SLV 8	3.33	-4974	1108.91	12802	3089.65	2.786	Si
SLV 8	5	-5261	357.25	13539	3245.59	9.085	Si
SLV 12	3.33	-6308	1022	16233	3794.96	3.713	Si
SLV 12	5	-5930	-221.55	15262	3600.51	16.251	Si
SLV 10	3.33	-21946	-1154.07	56481	8188.2	7.095	Si
SLV 10	5	-17944	249.09	46182	7744.56	31.091	Si
SLV 4	3.33	-8892	448.67	22885	5013.99	11.175	Si
SLV 4	5	-8685	1197.24	22352	4923.52	4.112	Si

Verifica a taglio nel piano secondo D.M. 17-01-18 (N.T.C.) §7.8.2.2.2 con rottura per scorrimento in combinazioni non sismiche, γM = 3

Comb.	Quota	N	V par	M	σ0	σN	l'	fvd	Vt scorr.	Vt fess.diag.	Vt,lim	c.s.	Verifica
SLU 39	3.33	-16053	-1135	-86.45		41316	1.3877	10833	4209			3.71	Si
SLU 39	5	-14041	-417	447.99		36137	1.3877	10374	4031			9.67	Si
SLU 77	3.33	-19259	-1153	-24.7		49566	1.3877	10833	4209			3.65	Si
SLU 77	5	-16767	-325	469.38		43152	1.3877	10833	4209			12.97	Si
SLU 62	3.33	-18341	-1186	-105.24		47203	1.3877	10833	4209			3.55	Si
SLU 62	5	-15919	-389	426.1		40971	1.3877	10833	4209			10.82	Si
SLU 81	3.33	-19420	-1317	-97.95		49980	1.3877	10833	4209			3.2	Si
SLU 81	5	-16899	-479	501.35		43493	1.3877	10833	4209			8.79	Si
SLU 83	3.33	-19613	-1279	-79.86		50477	1.3877	10833	4209			3.29	Si
SLU 83	5	-17092	-419	497.39		43989	1.3877	10833	4209			10.05	Si
SLU 74	3.33	-19066	-1190	-42.8		49069	1.3877	10833	4209			3.54	Si
SLU 74	5	-16574	-385	473.34		42657	1.3877	10833	4209			10.94	Si
SLU 41	3.33	-16247	-1098	-68.36		41813	1.3877	10833	4209			3.83	Si
SLU 41	5	-14234	-357	444.03		36633	1.3877	10440	4056			11.38	Si
SLU 82	3.33	-19265	-1124	-48.63		49583	1.3877	10833	4209			3.74	Si
SLU 82	5	-16805	-331	489.4		43250	1.3877	10833	4209			12.71	Si
SLU 60	3.33	-18148	-1223	-123.33		46706	1.3877	10833	4209			3.44	Si
SLU 60	5	-15727	-449	430.06		40476	1.3877	10833	4209			9.37	Si
SLU 79	3.33	-19174	-1143	-31.01		49348	1.3877	10833	4209			3.68	Si
SLU 79	5	-16684	-315	458.21		42938	1.3877	10833	4209			13.35	Si

Verifica a taglio nel piano secondo D.M. 17-01-18 (N.T.C.) §7.8.2.2.2 con rottura per scorrimento in combinazioni sismiche, γM = 2

Comb.	Quota	N	V par	M	σ0	σN	l'	fvd	Vt scorr.	Vt fess.diag.	Vt,lim	c.s.	Verifica
SLV 5	3.33	-20612	-6122	-1067.17		53049	1.3877	16250	6314			1.03	Si
SLV 5	5	-17275	-5276	827.89		44460	1.3877	16250	6314			1.2	Si
SLV 11	3.33	-6308	4514	1022		16233	1.3877	11580	4499			1	No, Vu<V
SLV 11	5	-5930	4717	-221.55		15262	1.3877	11386	4424			0.94	No, Vu<V
SLV 7	3.33	-4974	3148	1108.91		12802	1.3877	10894	4233			1.34	Si
SLV 7	5	-5261	3026	357.25		13539	1.3877	11041	4290			1.42	Si
SLV 6	3.33	-20612	-6122	-1067.17		53049	1.3877	16250	6314			1.03	Si
SLV 6	5	-17275	-5276	827.89		44460	1.3877	16250	6314			1.2	Si
SLV 1	3.33	-13583	-4471	-204.15		34959	1.3877	15325	5955			1.33	Si
SLV 1	5	-12289	-4343	1338.43		31628	1.3877	14659	5696			1.31	Si
SLV 2	3.33	-13583	-4471	-204.15		34959	1.3877	15325	5955			1.33	Si
SLV 2	5	-12289	-4343	1338.43		31628	1.3877	14659	5696			1.31	Si
SLV 9	3.33	-21946	-4756	-1154.07		56481	1.3877	16250	6314			1.33	Si

Comb.	Quota	N	V par	M	σ0	σN	l'	fvd	Vt scorr.	Vt fess.diag.	Vt,lim	c.s.	Verifica
SLV 9	5	-17944	-3585	249.09		46182	1.3877	16250	6314			1.76	Si
SLV 10	3.33	-21946	-4756	-1154.07		56481	1.3877	16250	6314			1.33	Si
SLV 10	5	-17944	-3585	249.09		46182	1.3877	16250	6314			1.76	Si
SLV 12	3.33	-6308	4514	1022		16233	1.3877	11580	4499			1	No, Vu<V
SLV 12	5	-5930	4717	-221.55		15262	1.3877	11386	4424			0.94	No, Vu<V
SLV 8	3.33	-4974	3148	1108.91		12802	1.3877	10894	4233			1.34	Si
SLV 8	5	-5261	3026	357.25		13539	1.3877	11041	4290			1.42	Si

Verifica a pressoflessione fuori piano D.M. 17-01-18 (N.T.C.)

quota 4.165 Wa 0.05 denominatore 8 γM = 2

Comb.	fd	Sa	σ0	N	M	Mc	Coeff.s.	Verifica
SLV 7	143750	0.33	12977	-5042	28.19	630.95	22.39	Si
SLV 8	143750	0.33	12977	-5042	28.19	630.95	22.39	Si
SLV 11	143750	0.33	16078	-6247	28.19	759.51	26.95	Si
SLV 12	143750	0.33	16078	-6247	28.19	759.51	26.95	Si
SLV 3	143750	0.33	21497	-8353	28.19	963.64	34.19	Si
SLV 4	143750	0.33	21497	-8353	28.19	963.64	34.19	Si
SLV 15	143750	0.33	31832	-12368	28.19	1280.46	45.43	Si
SLV 16	143750	0.33	31832	-12368	28.19	1280.46	45.43	Si
SLV 1	143750	0.33	31900	-12395	28.19	1282.23	45.49	Si
SLV 2	143750	0.33	31900	-12395	28.19	1282.23	45.49	Si

Verifica dei meccanismi locali di collasso con analisi cinematica lineare

forza di aggancio al piano = 0 quota mezzeria = 4.165 Wa = 0.05 Ta = 0.0166

Comb.	N top	N base	V orto	α0	M*	e*	a0*	aLim	Verifica
SLV 13	-14520	-18028	10	0.086	1570	0.982	1.2791	3.62994	No
SLV 14	-14520	-18028	10	0.086	1570	0.982	1.2791	3.62994	No
SLV 10	-17944	-21946	15	0.086	1918.9	0.985	1.26361	3.54326	No
SLV 9	-17944	-21946	15	0.086	1918.9	0.985	1.26361	3.54326	No
SLV 5	-17275	-20612	12	0.086	1850.7	0.984	1.26794	3.54326	No
SLV 6	-17275	-20612	12	0.086	1850.7	0.984	1.26794	3.54326	No
SLV 1	-12289	-13583	-1	0.088	1342.7	0.979	1.30054	3.62994	No
SLV 2	-12289	-13583	-1	0.088	1342.7	0.979	1.30054	3.62994	No
SLV 16	-10916	-13336	2	0.088	1202.8	0.976	1.30817	3.62994	No
SLV 15	-10916	-13336	2	0.088	1202.8	0.976	1.30817	3.62994	No

Tabella dei coefficienti di sicurezza minimi

Stato limite	Coeff.s.	Comb.	Verifica
PF_SLU	10.9	SLU 81	Si
V_SLU	3.197	SLU 81	Si
PF_SLV	2.786	SLV 7	Si
V_SLV	0.938	SLV 11	No
PFFP_SLV	22.386	SLV 7	Si
R_SLV	0.352	SLV 13	No

Maschio 84

Verifiche condotte secondo D.M. 17-01-18 (N.T.C.)

Dati geometrici

X ini.	Y ini.	X fin.	Y fin.	Quota i.	Quota.s	l	Sp.	h netta	h ini.	h fin.	a	a.s.,sx	a.s.,dx
-11.003	-3.309	-11.003	-0.354	L3	Z medio 416 cm	2.955	0.28	2.845	2.01	3.68			

Caratteristiche del materiale

(Circolare 7 21-01-19 C8.5.I) Muratura in mattoni pieni e malta di calce LC2_Corti

fb	fk	fvk0	fmedio	τ0	fv0	μ	ϕ	fv,lim	E	G	FC
600000			345000	9000	20000	0.58	0.77	32500	320000000	128000000	1.2

Verifica a pressoflessione nel piano secondo D.M. 17-01-18 NTC §7.8.2.2.1 in combinazioni non sismiche, γM = 3

Comb.	Quota	N	M	σ0	Mu	c.s.	Verifica
SLU 73	1.32	-68405	2746.64	82672	0	0	No, Rottura per schiacciamento
SLU 73	3.33	-55909	11279.76	67570	14084.68	1.249	Si
SLU 80	1.32	-70108	2791.86	84730	0	0	No, Rottura per schiacciamento
SLU 80	3.33	-57458	11692.13	69442	12523.88	1.071	Si
SLU 77	1.32	-70386	2460.77	85066	0	0	No, Rottura per schiacciamento
SLU 77	3.33	-57722	11707.38	69761	12247.66	1.046	Si
SLU 79	1.32	-69910	2395.74	84490	0	0	No, Rottura per schiacciamento
SLU 79	3.33	-57289	11585.5	69237	12699.38	1.096	Si
SLU 76	1.32	-69323	2901.29	83781	0	0	No, Rottura per schiacciamento
SLU 76	3.33	-56740	11521.49	68574	13260.57	1.151	Si
SLU 75	1.32	-69667	2702.24	84197	0	0	No, Rottura per schiacciamento
SLU 75	3.33	-57060	11572.28	68961	12935	1.118	Si
SLU 84	1.32	-72220	2792.41	87283	0	0	No, Rottura per schiacciamento
SLU 84	3.33	-59200	12076.2	71547	10643.4	0.881	No, M>Mu
SLU 81	1.32	-71104	2241.64	85934	0	0	No, Rottura per schiacciamento
SLU 81	3.33	-58200	11727.85	70338	11739.36	1.001	Si

Comb.	Quota	N	M	σ0	Mu	c.s.	Verifica
SLU 83	1.32	-72022	2396.29	87043	0	0	No, Rottura per schiacciamento
SLU 83	3.33	-59031	11969.58	71342	10831.81	0.905	No, M>Mu
SLU 74	1.32	-69469	2306.12	83957	0	0	No, Rottura per schiacciamento
SLU 74	3.33	-56891	11465.66	68756	13107.54	1.143	Si

Verifica a pressoflessione nel piano secondo D.M. 17-01-18 NTC §7.8.2.2.1 in combinazioni sismiche, γM = 2

Comb.	Quota	N	M	σ0	Mu	c.s.	Verifica
SLV 12	1.32	-44727	12441.29	54056	36850.05	2.962	Si
SLV 12	3.33	-40104	10394.01	48469	35750.88	3.44	Si
SLV 11	1.32	-44727	12441.29	54056	36850.05	2.962	Si
SLV 11	3.33	-40104	10394.01	48469	35750.88	3.44	Si
SLV 7	1.32	-48914	12652.29	59115	37306.53	2.949	Si
SLV 7	3.33	-42409	11789.17	51254	36376.88	3.086	Si
SLV 9	1.32	-46370	-10004.74	56042	37090.31	3.707	Si
SLV 9	3.33	-35149	3315.34	42480	33878.95	10.219	Si
SLV 4	1.32	-54373	5042.35	65713	37132.18	7.364	Si
SLV 4	3.33	-43363	10939.32	52407	36590.61	3.345	Si
SLV 5	1.32	-50557	-9793.74	61101	37345.7	3.813	Si
SLV 5	3.33	-37453	4710.5	45265	34838.71	7.396	Si
SLV 8	1.32	-48914	12652.29	59115	37306.53	2.949	Si
SLV 8	3.33	-42409	11789.17	51254	36376.88	3.086	Si
SLV 10	1.32	-46370	-10004.74	56042	37090.31	3.707	Si
SLV 10	3.33	-35149	3315.34	42480	33878.95	10.219	Si
SLV 3	1.32	-54373	5042.35	65713	37132.18	7.364	Si
SLV 3	3.33	-43363	10939.32	52407	36590.61	3.345	Si
SLV 6	1.32	-50557	-9793.74	61101	37345.7	3.813	Si
SLV 6	3.33	-37453	4710.5	45265	34838.71	7.396	Si

Verifica a taglio nel piano secondo D.M. 17-01-18 (N.T.C.) §7.8.2.2.2 con rottura per scorrimento in combinazioni non sismiche, γM = 3

Comb.	Quota	N	V par	M	σ0	σN	l'	fvd	Vt scorr.	Vt fess.diag.	Vt,lim	c.s.	Verifica
SLU 82	1.32	-71303	2774	2637.76		86174	2.9551	10833	8964			3.23	Si
SLU 82	3.33	-58369	4594	11834.48		70542	2.9551	10833	8964			1.95	Si
SLU 75	1.32	-69667	2713	2702.24		84197	2.9551	10833	8964			3.3	Si
SLU 75	3.33	-57060	4446	11572.28		68961	2.9551	10833	8964			2.02	Si
SLU 68	1.32	-62253	2964	2539.15		75236	2.9551	10833	8964			3.02	Si
SLU 68	3.33	-50738	4290	10061.28		61320	2.9551	10833	8964			2.09	Si
SLU 84	1.32	-72220	2766	2792.41		87283	2.9551	10833	8964			3.24	Si
SLU 84	3.33	-59200	4622	12076.2		71547	2.9551	10833	8964			1.94	Si
SLU 80	1.32	-70108	2694	2791.86		84730	2.9551	10833	8964			3.33	Si
SLU 80	3.33	-57458	4443	11692.13		69442	2.9551	10833	8964			2.02	Si
SLU 52	1.32	-62470	2981	2263.99		75498	2.9551	10833	8964			3.01	Si
SLU 52	3.33	-50862	4351	9997.78		61470	2.9551	10833	8964			2.06	Si
SLU 73	1.32	-68405	3120	2746.64		82672	2.9551	10833	8964			2.87	Si
SLU 73	3.33	-55909	4744	11279.76		67570	2.9551	10833	8964			1.89	Si
SLU 55	1.32	-63387	2973	2418.64		76607	2.9551	10833	8964			3.01	Si
SLU 55	3.33	-51693	4379	10239.5		62474	2.9551	10833	8964			2.05	Si
SLU 78	1.32	-70585	2705	2856.88		85306	2.9551	10833	8964			3.31	Si
SLU 78	3.33	-57891	4474	11814.01		69965	2.9551	10833	8964			2	Si
SLU 76	1.32	-69323	3112	2901.29		83781	2.9551	10833	8964			2.88	Si
SLU 76	3.33	-56740	4772	11521.49		68574	2.9551	10833	8964			1.88	Si

Verifica a taglio nel piano secondo D.M. 17-01-18 (N.T.C.) §7.8.2.2.2 con rottura per scorrimento in combinazioni sismiche, γM = 2

Comb.	Quota	N	V par	M	σ0	σN	l'	fvd	Vt scorr.	Vt fess.diag.	Vt,lim	c.s.	Verifica
SLV 9	1.32	-46370	-9638	-10004.74		56042	2.9551	16250	13446			1.4	Si
SLV 9	3.33	-35149	-8313	3315.34		42480	2.9551	16250	13446			1.62	Si
SLV 8	1.32	-48914	12660	12652.29		59115	2.9551	16250	13446			1.06	Si
SLV 8	3.33	-42409	13601	11789.17		51254	2.9551	16250	13446			0.99	No, Vu<V
SLV 3	1.32	-54373	2875	5042.35		65713	2.9551	16250	13446			4.68	Si
SLV 3	3.33	-43363	7258	10939.32		52407	2.9551	16250	13446			1.85	Si
SLV 5	1.32	-50557	-10945	-9793.74		61101	2.9551	16250	13446			1.23	Si
SLV 5	3.33	-37453	-7439	4710.5		45265	2.9551	16250	13446			1.81	Si
SLV 4	1.32	-54373	2875	5042.35		65713	2.9551	16250	13446			4.68	Si
SLV 4	3.33	-43363	7258	10939.32		52407	2.9551	16250	13446			1.85	Si
SLV 10	1.32	-46370	-9638	-10004.74		56042	2.9551	16250	13446			1.4	Si
SLV 10	3.33	-35149	-8313	3315.34		42480	2.9551	16250	13446			1.62	Si
SLV 12	1.32	-44727	13967	12441.29		54056	2.9551	16250	13446			0.96	No, Vu<V
SLV 12	3.33	-40104	12726	10394.01		48469	2.9551	16250	13446			1.06	Si
SLV 6	1.32	-50557	-10945	-9793.74		61101	2.9551	16250	13446			1.23	Si
SLV 6	3.33	-37453	-7439	4710.5		45265	2.9551	16250	13446			1.81	Si
SLV 11	1.32	-44727	13967	12441.29		54056	2.9551	16250	13446			0.96	No, Vu<V
SLV 11	3.33	-40104	12726	10394.01		48469	2.9551	16250	13446			1.06	Si
SLV 7	1.32	-48914	12660	12652.29		59115	2.9551	16250	13446			1.06	Si
SLV 7	3.33	-42409	13601	11789.17		51254	2.9551	16250	13446			0.99	No, Vu<V

Verifica a pressoflessione fuori piano D.M. 17-01-18 (N.T.C.)

quota 2.325 Wa 0.05 denominatore 8 γM = 2

Comb.	fd	Sa	σ0	N	M	Mc	Coeff.s.	Verifica
SLV 13	143750	0.29	48601	-40214	147.04	3390.59	23.06	Si
SLV 14	143750	0.29	48601	-40214	147.04	3390.59	23.06	Si
SLV 16	143750	0.29	49792	-41199	147.04	3417.46	23.24	Si
SLV 15	143750	0.29	49792	-41199	147.04	3417.46	23.24	Si
SLV 10	143750	0.29	51562	-42664	147.04	3452.41	23.48	Si
SLV 9	143750	0.29	51562	-42664	147.04	3452.41	23.48	Si
SLV 6	143750	0.29	55290	-45749	147.04	3506.62	23.85	Si
SLV 5	143750	0.29	55290	-45749	147.04	3506.62	23.85	Si
SLV 12	143750	0.29	55531	-45948	147.04	3509.22	23.87	Si
SLV 11	143750	0.29	55531	-45948	147.04	3509.22	23.87	Si

Verifica dei meccanismi locali di collasso con analisi cinematica lineare

forza di aggancio al piano = 0 quota mezzeria = 2.325 Wa = 0.05 Ta = 0.0483

Comb.	N top	N base	V orto	α0	M*	e*	a0*	aLim	Verifica
SLV 4	-43363	-54373	30	0.051	4746.8	0.978	0.75526	5.087	No
SLV 3	-43363	-54373	30	0.051	4746.8	0.978	0.75526	5.087	No
SLV 16	-35682	-40418	41	0.051	3964.3	0.974	0.75899	5.087	No
SLV 15	-35682	-40418	41	0.051	3964.3	0.974	0.75899	5.087	No
SLV 2	-41876	-54866	-15	0.051	4595.3	0.978	0.76177	5.087	No
SLV 1	-41876	-54866	-15	0.051	4595.3	0.978	0.76177	5.087	No
SLV 14	-34195	-40911	-4	0.052	3812.9	0.973	0.7761	5.087	No
SLV 13	-34195	-40911	-4	0.052	3812.9	0.973	0.7761	5.087	No
SLV 8	-42409	-48914	87	0.05	4649.6	0.978	0.73729	4.70235	No
SLV 7	-42409	-48914	87	0.05	4649.6	0.978	0.73729	4.70235	No

Tabella dei coefficienti di sicurezza minimi

Stato limite	Coeff.s.	Comb.	Verifica
PF_SLU	0	SLU 73	No
V_SLU	1.878	SLU 76	Si
PF_SLV	2.949	SLV 7	Si
V_SLV	0.963	SLV 11	No
PFFP_SLV	23.06	SLV 13	Si
R_SLV	0.148	SLV 3	No

Maschio 86

Verifiche condotte secondo D.M. 17-01-18 (N.T.C.)

Dati geometrici

X ini.	Y ini.	X fin.	Y fin.	Quota i.	Quota.s	l	Sp.	h netta	h ini.	h fin.	a	a.s.,sx	a.s.,dx
-11.003	-0.354	-11.003	0	L3	L4	0.354	0.28	3.68	3.68	3.68			

Caratteristiche del materiale

(Circolare 7 21-01-19 C8.5.I) Muratura in mattoni pieni e malta di calce LC2_Corti

fb	fk	fvk0	fmedio	τ0	fv0	μ	ϕ	fv,lim	E	G	FC
600000			345000	9000	20000	0.58	0.77	32500	320000000	128000000	1.2

Verifica a pressoflessione nel piano secondo D.M. 17-01-18 NTC §7.8.2.2.1 in combinazioni non sismiche, γM = 3

Comb.	Quota	N	M	σ0	Mu	c.s.	Verifica
SLU 60	1.32	-13463	432.14	135880	0	0	No, Rottura per schiacciamento
SLU 60	3.42	-11304	831.8	114090	0	0	No, Rottura per schiacciamento
SLU 61	1.32	-13714	455.3	138420	0	0	No, Rottura per schiacciamento
SLU 61	3.42	-11188	818.04	112917	0	0	No, Rottura per schiacciamento
SLU 53	1.32	-13149	417.58	132717	0	0	No, Rottura per schiacciamento
SLU 53	3.42	-11046	814.02	111492	0	0	No, Rottura per schiacciamento
SLU 54	1.32	-13401	440.75	135257	0	0	No, Rottura per schiacciamento
SLU 54	3.42	-10930	800.26	110320	0	0	No, Rottura per schiacciamento
SLU 1	1.32	-8987	278.15	90704	0	0	No, Rottura per schiacciamento
SLU 1	3.42	-7483	551.14	75531	96.34	0.175	No, M>Mu
SLU 55	1.32	-13446	452.07	135711	0	0	No, Rottura per schiacciamento
SLU 55	3.42	-10749	783.48	108494	0	0	No, Rottura per schiacciamento
SLU 56	1.32	-13387	424.47	135118	0	0	No, Rottura per schiacciamento
SLU 56	3.42	-11291	833.47	113966	0	0	No, Rottura per schiacciamento
SLU 59	1.32	-13516	443.52	136418	0	0	No, Rottura per schiacciamento
SLU 59	3.42	-11072	812.11	111750	0	0	No, Rottura per schiacciamento
SLU 57	1.32	-13639	447.64	137658	0	0	No, Rottura per schiacciamento
SLU 57	3.42	-11175	819.71	112794	0	0	No, Rottura per schiacciamento
SLU 58	1.32	-13264	420.35	133878	0	0	No, Rottura per schiacciamento
SLU 58	3.42	-11188	825.86	112922	0	0	No, Rottura per schiacciamento

Verifica a pressoflessione nel piano secondo D.M. 17-01-18 NTC §7.8.2.2.1 in combinazioni sismiche, γM = 2

Comb.	Quota	N	M	σ0	Mu	c.s.	Verifica
SLV 5	1.32	-4707	-152.64	47512	509	3.335	Si
SLV 5	3.42	-11463	918.64	115696	107.75	0.117	No, M>Mu
SLV 8	1.32	-15936	802.29	160843	0	0	No, Rottura per schiacciamento
SLV 8	3.42	-6032	386.59	60879	535.45	1.385	Si
SLV 11	1.32	-14944	767.49	150829	0	0	No, Rottura per schiacciamento
SLV 11	3.42	-5053	300.32	51001	520.85	1.734	Si

Comb.	Quota	N	M	σ0	Mu	c.s.	Verifica
SLV 6	1.32	-4707	-152.64	47512	509	3.335	Si
SLV 6	3.42	-11463	918.64	115696	107.75	0.117	No, M>Mu
SLV 4	1.32	-13163	508.67	132859	0	0	No, Rottura per schiacciamento
SLV 4	3.42	-9074	673.46	91589	402.04	0.597	No, M>Mu
SLV 12	1.32	-14944	767.49	150829	0	0	No, Rottura per schiacciamento
SLV 12	3.42	-5053	300.32	51001	520.85	1.734	Si
SLV 3	1.32	-13163	508.67	132859	0	0	No, Rottura per schiacciamento
SLV 3	3.42	-9074	673.46	91589	402.04	0.597	No, M>Mu
SLV 1	1.32	-9795	222.19	98860	330.85	1.489	Si
SLV 1	3.42	-10704	833.08	108034	219.36	0.263	No, M>Mu
SLV 7	1.32	-15936	802.29	160843	0	0	No, Rottura per schiacciamento
SLV 7	3.42	-6032	386.59	60879	535.45	1.385	Si
SLV 2	1.32	-9795	222.19	98860	330.85	1.489	Si
SLV 2	3.42	-10704	833.08	108034	219.36	0.263	No, M>Mu

Verifica a taglio nel piano secondo D.M. 17-01-18 (N.T.C.) §7.8.2.2.2 con rottura per scorrimento in combinazioni non sismiche, γM = 3

Comb.	Quota	N	V par	M	σ0	σN	I'	fvd	Vt scorr.	Vt fess.diag.	Vt,lim	c.s.	Verifica
SLU 82	1.32	-15077	2255	498.11		152176	0.3538	10833	1073			0.48	No, Vu<V
SLU 82	3.42	-12484	-4580	917.6		143704	0.3103	10833	941			0.21	No, Vu<V
SLU 80	1.32	-14879	2212	486.32		150174	0.3538	10833	1073			0.49	No, Vu<V
SLU 80	3.42	-12369	-4590	911.67		142659	0.3096	10833	939			0.2	No, Vu<V
SLU 81	1.32	-14826	2163	474.94		149636	0.3538	10833	1073			0.5	No, Vu<V
SLU 81	3.42	-12601	-4749	931.36		145624	0.309	10833	937			0.2	No, Vu<V
SLU 83	1.32	-15063	2194	481.83		152037	0.3538	10833	1073			0.49	No, Vu<V
SLU 83	3.42	-12846	-4867	950.81		148607	0.3087	10833	936			0.19	No, Vu<V
SLU 74	1.32	-14512	2106	460.39		146472	0.3538	10833	1073			0.51	No, Vu<V
SLU 74	3.42	-12343	-4678	913.59		142790	0.3087	10833	936			0.2	No, Vu<V
SLU 75	1.32	-14764	2199	483.56		149012	0.3538	10833	1073			0.49	No, Vu<V
SLU 75	3.42	-12227	-4509	899.83		140868	0.31	10833	940			0.21	No, Vu<V
SLU 77	1.32	-14750	2138	467.28		148873	0.3538	10833	1073			0.5	No, Vu<V
SLU 77	3.42	-12588	-4796	933.04		145773	0.3084	10833	936			0.2	No, Vu<V
SLU 79	1.32	-14627	2120	463.15		147634	0.3538	10833	1073			0.51	No, Vu<V
SLU 79	3.42	-12485	-4760	925.43		144581	0.3084	10833	935			0.2	No, Vu<V
SLU 84	1.32	-15315	2287	505		154577	0.3538	10833	1073			0.47	No, Vu<V
SLU 84	3.42	-12730	-4698	937.05		146685	0.3099	10833	940			0.2	No, Vu<V
SLU 78	1.32	-15002	2230	490.45		151414	0.3538	10833	1073			0.48	No, Vu<V
SLU 78	3.42	-12472	-4626	919.28		143850	0.3097	10833	939			0.2	No, Vu<V

Verifica a taglio nel piano secondo D.M. 17-01-18 (N.T.C.) §7.8.2.2.2 con rottura per scorrimento in combinazioni sismiche, γM = 2

Comb.	Quota	N	V par	M	σ0	σN	I'	fvd	Vt scorr.	Vt fess.diag.	Vt,lim	c.s.	Verifica
SLV 1	1.32	-9795	275	222.19		98860	0.3538	16250	1610			5.85	Si
SLV 1	3.42	-10704	-5304	833.08		128592	0.2973	16250	1353			0.26	No, Vu<V
SLV 12	1.32	-14944	3498	767.49		150829	0.3538	16250	1610			0.46	No, Vu<V
SLV 12	3.42	-5053	681	300.32		51200	0.3525	16250	1604			2.35	Si
SLV 9	1.32	-3715	-315	-187.45		37498	0.3538	15833	1569			4.99	Si
SLV 9	3.42	-10484	-6189	832.37		127971	0.2926	16250	1331			0.22	No, Vu<V
SLV 2	1.32	-9795	275	222.19		98860	0.3538	16250	1610			5.85	Si
SLV 2	3.42	-10704	-5304	833.08		128592	0.2973	16250	1353			0.26	No, Vu<V
SLV 6	1.32	-4707	-658	-152.64		47512	0.3538	16250	1610			2.45	Si
SLV 6	3.42	-11463	-6890	918.64		140998	0.2903	16250	1321			0.19	No, Vu<V
SLV 5	1.32	-4707	-658	-152.64		47512	0.3538	16250	1610			2.45	Si
SLV 5	3.42	-11463	-6890	918.64		140998	0.2903	16250	1321			0.19	No, Vu<V
SLV 3	1.32	-13163	1419	508.67		132859	0.3538	16250	1610			1.13	Si
SLV 3	3.42	-9074	-3243	673.46		105180	0.3081	16250	1402			0.43	No, Vu<V
SLV 4	1.32	-13163	1419	508.67		132859	0.3538	16250	1610			1.13	Si
SLV 4	3.42	-9074	-3243	673.46		105180	0.3081	16250	1402			0.43	No, Vu<V
SLV 10	1.32	-3715	-315	-187.45		37498	0.3538	15833	1569			4.99	Si
SLV 10	3.42	-10484	-6189	832.37		127971	0.2926	16250	1331			0.22	No, Vu<V
SLV 11	1.32	-14944	3498	767.49		150829	0.3538	16250	1610			0.46	No, Vu<V
SLV 11	3.42	-5053	681	300.32		51200	0.3525	16250	1604			2.35	Si

Verifica a pressoflessione fuori piano D.M. 17-01-18 (N.T.C.)

quota 3.16 Wa 0.05 denominatore 8 γM = 2

Comb.	fd	Sa	σ0	N	M	Mc	Coeff.s.	Verifica
SLV 2	143750	0.31	111204	-11018	31.21	138.66	4.44	Si
SLV 1	143750	0.31	111204	-11018	31.21	138.66	4.44	Si
SLV 5	143750	0.31	108173	-10718	31.21	172.09	5.51	Si
SLV 6	143750	0.31	108173	-10718	31.21	172.09	5.51	Si
SLV 3	143750	0.31	104307	-10334	31.21	211.72	6.78	Si
SLV 4	143750	0.31	104307	-10334	31.21	211.72	6.78	Si
SLV 10	143750	0.31	98679	-9777	31.21	263.34	8.44	Si
SLV 9	143750	0.31	98679	-9777	31.21	263.34	8.44	Si
SLV 8	143750	0.31	85184	-8440	31.21	357.83	11.47	Si
SLV 7	143750	0.31	85184	-8440	31.21	357.83	11.47	Si

Verifica dei meccanismi locali di collasso con analisi cinematica lineare

forza di aggancio al piano = 0 quota mezzeria = 3.16 Wa = 0.05 Ta = 0.0808

Comb.	N top	N base	V orto	α0	M*	e*	a0*	aLim	Verifica
SLV 15	-3617	-9856	-362	0	419.6	0.963	0	8.50261	No
SLV 6	-1147	-4707	78	0	169.2	0.92	0	7.42296	No
SLV 9	-787	-3715	-91	0	133.3	0.906	0	7.42296	No
SLV 5	-1147	-4707	78	0	169.2	0.92	0	7.42296	No
SLV 1	-3317	-9795	233	0	389	0.961	0	8.50261	No
SLV 13	-2117	-6488	-327	0	267.2	0.945	0	8.50261	No
SLV 10	-787	-3715	-91	0	133.3	0.906	0	7.42296	No

Comb.	N top	N base	V orto	α0	M*	e*	a0*	aLim	Verifica
SLV 2	-3317	-9795	233	0	389	0.961	0	8.50261	No
SLV 16	-3617	-9856	-362	0	419.6	0.963	0	8.50261	No
SLV 14	-2117	-6488	-327	0	267.2	0.945	0	8.50261	No

Tabella dei coefficienti di sicurezza minimi

Stato limite	Coeff.s.	Comb.	Verifica
PF_SLU	0	SLU 1	No
V_SLU	0.192	SLU 83	No
PF_SLV	0	SLV 3	No
V_SLV	0.192	SLV 5	No
PFFP_SLV	4.443	SLV 1	Si
R_SLV	0	SLV 1	No

Maschio 87

Verifiche condotte secondo D.M. 17-01-18 (N.T.C.)

Dati geometrici

X ini.	Y ini.	X fin.	Y fin.	Quota i.	Quota.s	l	Sp.	h netta	h ini.	h fin.	a	a.s.,sx	a.s.,dx
-9.72	1.141	-9.72	1.426	L3	L4	0.285	0.14	3.68	3.68	3.68			

Caratteristiche del materiale

(Circolare 7 21-01-19 C8.5.I) Muratura in mattoni pieni e malta di calce LC2_Corti

fb	fk	fvk0	fmedio	τ0	fv0	μ	ϕ	fv,lim	E	G	FC
600000			345000	9000	20000	0.58	0.77	32500	320000000	128000000	1.2

Verifica a pressoflessione nel piano secondo D.M. 17-01-18 NTC §7.8.2.2.1 in combinazioni non sismiche, γM = 3

Comb.	Quota	N	M	σ0	Mu	c.s.	Verifica
SLU 57	1.32	-4596	165.18	115330	0	0	No, Rottura per schiacciamento
SLU 57	3.42	-1255	-210.15	0	0	0	No, e>l/2
SLU 55	1.32	-4443	160.91	111505	0	0	No, Rottura per schiacciamento
SLU 55	3.42	-1200	-204.06	0	0	0	No, e>l/2
SLU 54	1.32	-4491	161.76	112695	0	0	No, Rottura per schiacciamento
SLU 54	3.42	-1219	-205.23	0	0	0	No, e>l/2
SLU 53	1.32	-4498	161.76	112877	0	0	No, Rottura per schiacciamento
SLU 53	3.42	-1221	-205.5	0	0	0	No, e>l/2
SLU 56	1.32	-4603	165.17	115512	0	0	No, Rottura per schiacciamento
SLU 56	3.42	-1257	-210.42	0	0	0	No, e>l/2
SLU 1	1.32	-3044	107.4	76397	26.92	0.251	No, M>Mu
SLU 1	3.42	-811	-138.38	0	0	0	No, e>l/2
SLU 61	1.32	-4593	168.27	115252	0	0	No, Rottura per schiacciamento
SLU 61	3.42	-1239	-211.33	0	0	0	No, e>l/2
SLU 60	1.32	-4600	168.27	115434	0	0	No, Rottura per schiacciamento
SLU 60	3.42	-1240	-211.6	0	0	0	No, e>l/2
SLU 58	1.32	-4560	164.32	114444	0	0	No, Rottura per schiacciamento
SLU 58	3.42	-1238	-209.42	0	0	0	No, e>l/2
SLU 59	1.32	-4553	164.32	114262	0	0	No, Rottura per schiacciamento
SLU 59	3.42	-1237	-209.15	0	0	0	No, e>l/2

Verifica a pressoflessione nel piano secondo D.M. 17-01-18 NTC §7.8.2.2.1 in combinazioni sismiche, γM = 2

Comb.	Quota	N	M	σ0	Mu	c.s.	Verifica
SLV 9	1.32	-825	-536.78	0	0	0	No, e>l/2
SLV 9	3.42	-2567	391.15	0	0	0	No, e>l/2
SLV 7	1.32	-5911	778.11	148343	0	0	No, Rottura per schiacciamento
SLV 7	3.42	749	-697.83	0	0	0	No, Trazione
SLV 11	1.32	-5540	703.93	139034	0	0	No, Rottura per schiacciamento
SLV 11	3.42	549	-614.86	0	0	0	No, Trazione
SLV 3	1.32	-4694	430.41	117793	24.03	0.056	No, M>Mu
SLV 3	3.42	-109	-442.52	0	0	0	No, e>l/2
SLV 5	1.32	-1196	-462.6	0	0	0	No, e>l/2
SLV 5	3.42	-2367	308.18	59403	173.1	0.562	No, M>Mu
SLV 8	1.32	-5911	778.11	148343	0	0	No, Rottura per schiacciamento
SLV 8	3.42	749	-697.83	0	0	0	No, Trazione
SLV 6	1.32	-1196	-462.6	0	0	0	No, e>l/2
SLV 6	3.42	-2367	308.18	59403	173.1	0.562	No, M>Mu
SLV 12	1.32	-5540	703.93	139034	0	0	No, Rottura per schiacciamento
SLV 12	3.42	549	-614.86	0	0	0	No, Trazione
SLV 10	1.32	-825	-536.78	0	0	0	No, e>l/2
SLV 10	3.42	-2567	391.15	0	0	0	No, e>l/2
SLV 4	1.32	-4694	430.41	117793	24.03	0.056	No, M>Mu
SLV 4	3.42	-109	-442.52	0	0	0	No, e>l/2

Verifica a taglio nel piano secondo D.M. 17-01-18 (N.T.C.) §7.8.2.2.2 con rottura per scorrimento in combinazioni non sismiche, γM = 3

Comb.	Quota	N	V par	M	σ0	σN	l'	fvd	Vt scorr.	Vt fess.diag.	Vt,lim	c.s.	Verifica

Comb.	Quota	N	V par	M	σ0	σN	l'	fvd	Vt scorr.	Vt fess.diag.	Vt,lim	c.s.	Verifica
SLU 53	1.32	-4498	1127	161.76		112877	0.2846	10833	432			0.38	No, Vu<V
SLU 53	3.42	-1221	138	-205.5		0	0	5556	0			0	No, Vu<V
SLU 1	1.32	-3044	763	107.4		76397	0.2846	10833	432			0.57	No, Vu<V
SLU 1	3.42	-811	91	-138.38		0	0	5556	0			0	No, Vu<V
SLU 58	1.32	-4560	1143	164.32		114444	0.2846	10833	432			0.38	No, Vu<V
SLU 58	3.42	-1238	141	-209.42		0	0	5556	0			0	No, Vu<V
SLU 55	1.32	-4443	1113	160.91		111505	0.2846	10833	432			0.39	No, Vu<V
SLU 55	3.42	-1200	138	-204.06		0	0	5556	0			0	No, Vu<V
SLU 60	1.32	-4600	1153	168.27		115434	0.2846	10833	432			0.37	No, Vu<V
SLU 60	3.42	-1240	145	-211.6		0	0	5556	0			0	No, Vu<V
SLU 59	1.32	-4553	1141	164.32		114262	0.2846	10833	432			0.38	No, Vu<V
SLU 59	3.42	-1237	141	-209.15		0	0	5556	0			0	No, Vu<V
SLU 56	1.32	-4603	1153	165.17		115512	0.2846	10833	432			0.37	No, Vu<V
SLU 56	3.42	-1257	141	-210.42		0	0	5556	0			0	No, Vu<V
SLU 61	1.32	-4593	1151	168.27		115252	0.2846	10833	432			0.38	No, Vu<V
SLU 61	3.42	-1239	145	-211.33		0	0	5556	0			0	No, Vu<V
SLU 57	1.32	-4596	1151	165.18		115330	0.2846	10833	432			0.38	No, Vu<V
SLU 57	3.42	-1255	141	-210.15		0	0	5556	0			0	No, Vu<V
SLU 54	1.32	-4491	1124	161.76		112695	0.2846	10833	432			0.38	No, Vu<V
SLU 54	3.42	-1219	138	-205.23		0	0	5556	0			0	No, Vu<V

Verifica a taglio nel piano secondo D.M. 17-01-18 (N.T.C.) §7.8.2.2.2 con rottura per scorrimento in combinazioni sismiche, γM = 2

Comb.	Quota	N	V par	M	σ0	σN	l'	fvd	Vt scorr.	Vt fess.diag.	Vt,lim	c.s.	Verifica
SLV 5	1.32	-1196	385	-462.6		0	0	8333	0			0	No, Vu<V
SLV 5	3.42	-2367	-548	308.18		465042	0.0364	16250	83			0.15	No, Vu<V
SLV 9	1.32	-825	229	-536.78		0	0	8333	0			0	No, Vu<V
SLV 9	3.42	-2567	-647	391.15		0	0	8333	0			0	No, Vu<V
SLV 6	1.32	-1196	385	-462.6		0	0	8333	0			0	No, Vu<V
SLV 6	3.42	-2367	-548	308.18		465042	0.0364	16250	83			0.15	No, Vu<V
SLV 8	1.32	-5911	1458	778.11		1317888	0.032	16250	73			0.05	No, Vu<V
SLV 8	3.42	749	852	-697.83		0	0	8333	0			0	No, Vu<V
SLV 4	1.32	-4694	1264	430.41		220796	0.1518	16250	345			0.27	No, Vu<V
SLV 4	3.42	-109	478	-442.52		0	0	8333	0			0	No, Vu<V
SLV 3	1.32	-4694	1264	430.41		220796	0.1518	16250	345			0.27	No, Vu<V
SLV 3	3.42	-109	478	-442.52		0	0	8333	0			0	No, Vu<V
SLV 10	1.32	-825	229	-536.78		0	0	8333	0			0	No, Vu<V
SLV 10	3.42	-2567	-647	391.15		0	0	8333	0			0	No, Vu<V
SLV 7	1.32	-5911	1458	778.11		1317888	0.032	16250	73			0.05	No, Vu<V
SLV 7	3.42	749	852	-697.83		0	0	8333	0			0	No, Vu<V
SLV 12	1.32	-5540	1303	703.93		864661	0.0458	16250	104			0.08	No, Vu<V
SLV 12	3.42	549	753	-614.86		0	0	8333	0			0	No, Vu<V
SLV 11	1.32	-5540	1303	703.93		864661	0.0458	16250	104			0.08	No, Vu<V
SLV 11	3.42	549	753	-614.86		0	0	8333	0			0	No, Vu<V

Verifica a pressoflessione fuori piano D.M. 17-01-18 (N.T.C.)

quota 3.16 Wa 0.03 denominatore 8 γM = 2

Comb.	fd	Sa	σ0	N	M	Mc	Coeff.s.	Verifica
SLV 4	143750	0.31	0	-109	13.75	0	0	No, e>t/2
SLV 7	143750	0.31	0	904	13.75	0	0	No, Trazione
SLV 3	143750	0.31	0	-109	13.75	0	0	No, e>t/2
SLV 12	143750	0.31	0	721	13.75	0	0	No, Trazione
SLV 8	143750	0.31	0	904	13.75	0	0	No, Trazione
SLV 11	143750	0.31	0	721	13.75	0	0	No, Trazione
SLV 16	143750	0.31	18020	-718	13.75	42.85	3.12	Si
SLV 15	143750	0.31	18020	-718	13.75	42.85	3.12	Si
SLV 2	143750	0.31	29120	-1160	13.75	61.87	4.5	Si
SLV 1	143750	0.31	29120	-1160	13.75	61.87	4.5	Si

Verifica dei meccanismi locali di collasso con analisi cinematica lineare

forza di aggancio al piano = 0 quota mezzeria = 3.16 Wa = 0.03 Ta = 0.1615

Comb.	N top	N base	V orto	α0	M*	e*	a0*	aLim	Verifica
SLV 9	229	-825	4	0	0	0	0	14.13539	No, Trazione
SLV 10	229	-825	4	0	0	0	0	14.13539	No, Trazione
SLV 6	77	-1196	1	0	0	0	0	14.13539	No, Trazione
SLV 5	77	-1196	1	0	0	0	0	14.13539	No, Trazione
SLV 13	-333	-2043	6	0.011	55.3	0.908	0.18283	14.13539	No
SLV 14	-333	-2043	6	0.011	55.3	0.908	0.18283	14.13539	No
SLV 3	-1473	-4694	-6	0.017	170.6	0.964	0.24941	14.13539	No
SLV 4	-1473	-4694	-6	0.017	170.6	0.964	0.24941	14.13539	No
SLV 2	-840	-3279	-5	0.016	106.3	0.945	0.25379	14.13539	No
SLV 1	-840	-3279	-5	0.016	106.3	0.945	0.25379	14.13539	No

Tabella dei coefficienti di sicurezza minimi

Stato limite	Coeff.s.	Comb.	Verifica
PF_SLU	0	SLU 1	No
V_SLU	0	SLU 1	No
PF_SLV	0	SLV 12	No
V_SLV	0	SLV 3	No
PFFP_SLV	0	SLV 12	No
R_SLV	0	SLV 10	No

Maschio 88

Verifiche condotte secondo D.M. 17-01-18 (N.T.C.)

Dati geometrici

X ini.	Y ini.	X fin.	Y fin.	Quota i.	Quota.s	l	Sp.	h netta	h ini.	h fin.	a	a.s.,sx	a.s.,dx
-9.72	2.226	-9.72	6.64	L3	L4	4.414	0.14	3.68	3.68	3.68			

Caratteristiche del materiale

(Circolare 7 21-01-19 C8.5.I) Muratura in mattoni pieni e malta di calce LC2_Corti

fb	fk	fvk0	fmedio	τ0	fv0	μ	ϕ	fv,lim	E	G	FC
600000			345000	9000	20000	0.58	0.77	32500	320000000	128000000	1.2

Verifica a pressoflessione nel piano secondo D.M. 17-01-18 NTC §7.8.2.2.1 in combinazioni non sismiche, γM = 3

Comb.	Quota	N	M	σ0	Mu	c.s.	Verifica
SLU 60	1.32	-58094	10040.05	94004	0	0	No, Rottura per schiacciamento
SLU 60	3.42	-46772	-11989.61	75684	7317.3	0.61	No, M>Mu
SLU 62	1.32	-59094	10109.83	95622	0	0	No, Rottura per schiacciamento
SLU 62	3.42	-47665	-12292.68	77128	5591.9	0.455	No, M>Mu
SLU 55	1.32	-56311	9912.96	91120	0	0	No, Rottura per schiacciamento
SLU 55	3.42	-45304	-11485.71	73308	10004.3	0.871	No, M>Mu
SLU 61	1.32	-58081	10067.39	93983	0	0	No, Rottura per schiacciamento
SLU 61	3.42	-46754	-11955.28	75655	7351.29	0.615	No, M>Mu
SLU 57	1.32	-57888	10029.66	93671	0	0	No, Rottura per schiacciamento
SLU 57	3.42	-46708	-11941.36	75580	7439.31	0.623	No, M>Mu
SLU 42	1.32	-55785	8760.84	90268	0	0	No, Rottura per schiacciamento
SLU 42	3.42	-45332	-12139.13	73354	9953.97	0.82	No, M>Mu
SLU 59	1.32	-57320	9964.51	92752	0	0	No, Rottura per schiacciamento
SLU 59	3.42	-46208	-11811.67	74772	8371.74	0.709	No, M>Mu
SLU 56	1.32	-57901	10002.32	93692	0	0	No, Rottura per schiacciamento
SLU 56	3.42	-46726	-11975.68	75609	7405.39	0.618	No, M>Mu
SLU 58	1.32	-57333	9937.17	92773	0	0	No, Rottura per schiacciamento
SLU 58	3.42	-46226	-11845.99	74801	8338.61	0.704	No, M>Mu
SLU 54	1.32	-56888	9959.88	92053	0	0	No, Rottura per schiacciamento
SLU 54	3.42	-45815	-11638.28	74136	9089.82	0.781	No, M>Mu

Verifica a pressoflessione nel piano secondo D.M. 17-01-18 NTC §7.8.2.2.1 in combinazioni sismiche, γM = 2

Comb.	Quota	N	M	σ0	Mu	c.s.	Verifica
SLV 7	1.32	-45978	29953.9	74399	39688.7	1.325	Si
SLV 7	3.42	-40749	-10782.66	65938	41403.07	3.84	Si
SLV 8	1.32	-45978	29953.9	74399	39688.7	1.325	Si
SLV 8	3.42	-40749	-10782.66	65938	41403.07	3.84	Si
SLV 10	1.32	-39866	-14771.91	64509	41534.82	2.812	Si
SLV 10	3.42	-28177	-6618.36	45594	38983.15	5.89	Si
SLV 5	1.32	-34500	-14819.11	55825	41355.2	2.791	Si
SLV 5	3.42	-25375	-7509.07	41060	37184.84	4.952	Si
SLV 11	1.32	-51344	30001.1	83083	36267.51	1.209	Si
SLV 11	3.42	-43551	-9891.95	70472	40683.31	4.113	Si
SLV 15	1.32	-53587	14385.6	86713	34338.54	2.387	Si
SLV 15	3.42	-41438	-7707.03	67054	41268.51	5.355	Si
SLV 12	1.32	-51344	30001.1	83083	36267.51	1.209	Si
SLV 12	3.42	-43551	-9891.95	70472	40683.31	4.113	Si
SLV 9	1.32	-39866	-14771.91	64509	41534.82	2.812	Si
SLV 9	3.42	-28177	-6618.36	45594	38983.15	5.89	Si
SLV 16	1.32	-53587	14385.6	86713	34338.54	2.387	Si
SLV 16	3.42	-41438	-7707.03	67054	41268.51	5.355	Si
SLV 6	1.32	-34500	-14819.11	55825	41355.2	2.791	Si
SLV 6	3.42	-25375	-7509.07	41060	37184.84	4.952	Si

Verifica a taglio nel piano secondo D.M. 17-01-18 (N.T.C.) §7.8.2.2.2 con rottura per scorrimento in combinazioni non sismiche, γM = 3

Comb.	Quota	N	V par	M	σ0	σN	l'	fvd	Vt scorr.	Vt fess.diag.	Vt,lim	c.s.	Verifica
SLU 81	1.32	-64414	1145	10636.79		104231	4.4142	10833	6695			5.85	Si
SLU 81	3.42	-52063	234	-13628.28		84246	4.4142	10833	6695			28.57	Si
SLU 74	1.32	-63221	1117	10529.28		102301	4.4142	10833	6695			5.99	Si
SLU 74	3.42	-51124	221	-13311.28		82726	4.4142	10833	6695			30.3	Si
SLU 75	1.32	-63208	1112	10556.62		102280	4.4142	10833	6695			6.02	Si
SLU 75	3.42	-51106	216	-13276.96		82697	4.4142	10833	6695			31.03	Si
SLU 79	1.32	-63653	1112	10533.91		103000	4.4142	10833	6695			6.02	Si
SLU 79	3.42	-51517	210	-13484.67		83362	4.4142	10833	6695			31.85	Si
SLU 77	1.32	-64221	1127	10599.06		103919	4.4142	10833	6695			5.94	Si
SLU 77	3.42	-52016	218	-13614.36		84170	4.4142	10833	6695			30.69	Si
SLU 83	1.32	-65414	1155	10706.57		105849	4.4142	10833	6695			5.79	Si
SLU 83	3.42	-52955	232	-13931.36		85690	4.4142	10833	6695			28.92	Si
SLU 82	1.32	-64401	1141	10664.13		104210	4.4142	10833	6695			5.87	Si
SLU 82	3.42	-52045	229	-13593.96		84216	4.4142	10833	6695			29.22	Si
SLU 84	1.32	-65401	1151	10733.91		105828	4.4142	10833	6695			5.82	Si
SLU 84	3.42	-52937	226	-13897.04		85661	4.4142	10833	6695			29.58	Si
SLU 80	1.32	-63640	1107	10561.25		102979	4.4142	10833	6695			6.05	Si
SLU 80	3.42	-51499	205	-13450.35		83333	4.4142	10833	6695			32.66	Si
SLU 78	1.32	-64208	1122	10626.4		103898	4.4142	10833	6695			5.97	Si
SLU 78	3.42	-51998	213	-13580.04		84141	4.4142	10833	6695			31.44	Si

Verifica a taglio nel piano secondo D.M. 17-01-18 (N.T.C.) §7.8.2.2.2 con rottura per scorrimento in combinazioni sismiche, γM = 2

Comb.	Quota	N	V par	M	σ0	σN	l'	fvd	Vt scorr.	Vt fess.diag.	Vt,lim	c.s.	Verifica

Comb.	Quota	N	V par	M	σ0	σN	l'	fvd	Vt scorr.	Vt fess.diag.	Vt,lim	c.s.	Verifica
SLV 9	1.32	-39866	-14808	-14771.91		64509	4.4142	16250	10042			0.68	No, Vu<V
SLV 9	3.42	-28177	-13903	-6618.36		45594	4.4142	16250	10042			0.72	No, Vu<V
SLV 5	1.32	-34500	-16539	-14819.11		55825	4.4142	16250	10042			0.61	No, Vu<V
SLV 5	3.42	-25375	-14591	-7509.07		41060	4.4142	16250	10042			0.69	No, Vu<V
SLV 11	1.32	-51344	18044	30001.1		83083	4.4142	16250	10042			0.56	No, Vu<V
SLV 11	3.42	-43551	14864	-9891.95		70472	4.4142	16250	10042			0.68	No, Vu<V
SLV 8	1.32	-45978	16313	29953.9		74399	4.4142	16250	10042			0.62	No, Vu<V
SLV 8	3.42	-40749	14176	-10782.66		65938	4.4142	16250	10042			0.71	No, Vu<V
SLV 6	1.32	-34500	-16539	-14819.11		55825	4.4142	16250	10042			0.61	No, Vu<V
SLV 6	3.42	-25375	-14591	-7509.07		41060	4.4142	16250	10042			0.69	No, Vu<V
SLV 15	1.32	-53587	8565	14385.6		86713	4.4142	16250	10042			1.17	Si
SLV 15	3.42	-41438	5598	-7707.03		67054	4.4142	16250	10042			1.79	Si
SLV 7	1.32	-45978	16313	29953.9		74399	4.4142	16250	10042			0.62	No, Vu<V
SLV 7	3.42	-40749	14176	-10782.66		65938	4.4142	16250	10042			0.71	No, Vu<V
SLV 12	1.32	-51344	18044	30001.1		83083	4.4142	16250	10042			0.56	No, Vu<V
SLV 12	3.42	-43551	14864	-9891.95		70472	4.4142	16250	10042			0.68	No, Vu<V
SLV 10	1.32	-39866	-14808	-14771.91		64509	4.4142	16250	10042			0.68	No, Vu<V
SLV 10	3.42	-28177	-13903	-6618.36		45594	4.4142	16250	10042			0.72	No, Vu<V
SLV 16	1.32	-53587	8565	14385.6		86713	4.4142	16250	10042			1.17	Si
SLV 16	3.42	-41438	5598	-7707.03		67054	4.4142	16250	10042			1.79	Si

Verifica a pressoflessione fuori piano D.M. 17-01-18 (N.T.C.)

quota 3.16 Wa 0.03 denominatore 8 γM = 2

Comb.	fd	Sa	σ0	N	M	Mc	Coeff.s.	Verifica
SLV 5	143750	0.31	41858	-25868	213.19	1190.44	5.58	Si
SLV 6	143750	0.31	41858	-25868	213.19	1190.44	5.58	Si
SLV 2	143750	0.31	44514	-27509	213.19	1224.12	5.74	Si
SLV 1	143750	0.31	44514	-27509	213.19	1224.12	5.74	Si
SLV 9	143750	0.31	46703	-28862	213.19	1248.12	5.85	Si
SLV 10	143750	0.31	46703	-28862	213.19	1248.12	5.85	Si
SLV 3	143750	0.31	51636	-31910	213.19	1289.77	6.05	Si
SLV 4	143750	0.31	51636	-31910	213.19	1289.77	6.05	Si
SLV 11	143750	0.31	70441	-43532	213.19	1290.5	6.05	Si
SLV 12	143750	0.31	70441	-43532	213.19	1290.5	6.05	Si

Verifica dei meccanismi locali di collasso con analisi cinematica lineare

forza di aggancio al piano = 0 quota mezzeria = 3.16 Wa = 0.03 Ta = 0.1615

Comb.	N top	N base	V orto	α0	M*	e*	a0*	aLim	Verifica
SLV 2	-21422	-32256	-85	0.017	2501.4	0.962	0.25798	14.13539	No
SLV 1	-21422	-32256	-85	0.017	2501.4	0.962	0.25798	14.13539	No
SLV 16	-28615	-53587	83	0.018	3233.5	0.97	0.26341	14.13539	No
SLV 15	-28615	-53587	83	0.018	3233.5	0.97	0.26341	14.13539	No
SLV 3	-23086	-35700	-66	0.018	2670.8	0.964	0.27077	14.13539	No
SLV 4	-23086	-35700	-66	0.018	2670.8	0.964	0.27077	14.13539	No
SLV 14	-26951	-50144	64	0.018	3064	0.968	0.27245	14.13539	No
SLV 13	-26951	-50144	64	0.018	3064	0.968	0.27245	14.13539	No
SLV 5	-21415	-34500	-55	0.018	2500.7	0.962	0.27721	14.13539	No
SLV 6	-21415	-34500	-55	0.018	2500.7	0.962	0.27721	14.13539	No

Tabella dei coefficienti di sicurezza minimi

Stato limite	Coeff.s.	Comb.	Verifica
PF_SLU	0	SLU 31	No
V_SLU	5.794	SLU 83	Si
PF_SLV	1.209	SLV 11	Si
V_SLV	0.557	SLV 11	No
PFFP_SLV	5.584	SLV 5	Si
R_SLV	0.018	SLV 1	No

Maschio 89

Verifiche condotte secondo D.M. 17-01-18 (N.T.C.)

Dati geometrici

X ini.	Y ini.	X fin.	Y fin.	Quota i.	Quota.s	l	Sp.	h netta	h ini.	h fin.	a	a.s.,sx	a.s.,dx
-11.003	-4.697	-9.867	-4.697	L3	L4	1.136	0.3	3.68	3.68	3.68			

Caratteristiche del materiale

(Circolare 7 21-01-19 C8.5.I) Muratura in mattoni pieni e malta di calce LC2_Corti

fb	fk	fvk0	fmedio	τ0	fv0	μ	ϕ	fv,lim	E	G	FC
600000			345000	9000	20000	0.58	0.77	32500	320000000	128000000	1.2

Verifica a pressoflessione nel piano secondo D.M. 17-01-18 NTC §7.8.2.2.1 in combinazioni non sismiche, γM = 3

Comb.	Quota	N	M	σ0	Mu	c.s.	Verifica
SLU 83	1.32	-21649	1272.34	63526	2706.81	2.127	Si
SLU 83	4.43	-13640	-57.21	40025	3940.51	68.881	Si
SLU 84	1.32	-21152	1218.8	62070	2859.56	2.346	Si
SLU 84	4.43	-13440	-71.94	39438	3937.72	54.738	Si
SLU 74	1.32	-21024	1226.25	61693	2897.45	2.363	Si
SLU 74	4.43	-13220	-64.44	38792	3932.77	61.027	Si
SLU 82	1.32	-20985	1199.32	61580	2908.69	2.425	Si
SLU 82	4.43	-13309	-70.42	39055	3935.02	55.883	Si
SLU 80	1.32	-20638	1188.84	60560	3007.28	2.53	Si
SLU 80	4.43	-13115	-79.74	38483	3929.7	49.282	Si
SLU 79	1.32	-21134	1242.39	62016	2864.98	2.306	Si
SLU 79	4.43	-13315	-65.01	39070	3935.15	60.532	Si
SLU 62	1.32	-20454	1191.4	60021	3057.35	2.566	Si

Comb.	Quota	N	M	σ0	Mu	c.s.	Verifica
SLU 62	4.43	-12805	-70.65	37576	3918.06	55.46	Si
SLU 77	1.32	-21191	1245.73	62183	2848.05	2.286	Si
SLU 77	4.43	-13350	-65.96	39175	3935.95	59.668	Si
SLU 81	1.32	-21482	1252.87	63036	2759.33	2.202	Si
SLU 81	4.43	-13509	-55.69	39642	3938.87	70.734	Si
SLU 78	1.32	-20695	1192.18	60726	2991.5	2.509	Si
SLU 78	4.43	-13150	-80.69	38588	3930.79	48.712	Si

Verifica a pressoflessione nel piano secondo D.M. 17-01-18 NTC §7.8.2.2.1 in combinazioni sismiche, γM = 2

Comb.	Quota	N	M	σ0	Mu	c.s.	Verifica
SLV 13	1.32	-31265	5384.43	91745	4424.28	0.822	No, M>Mu
SLV 13	4.43	-15665	-139.9	45969	5550.13	39.671	Si
SLV 16	1.32	-23255	4811.68	68240	5831.62	1.212	Si
SLV 16	4.43	-11402	-97.03	33459	4702.75	48.467	Si
SLV 15	1.32	-23255	4811.68	68240	5831.62	1.212	Si
SLV 15	4.43	-11402	-97.03	33459	4702.75	48.467	Si
SLV 2	1.32	-6682	-3107.36	19607	3186.1	1.025	Si
SLV 2	4.43	-7284	-18.38	21374	3413.35	185.711	Si
SLV 4	1.32	1328	-3680.11	0	0	0	No, Trazione
SLV 4	4.43	-3021	24.49	8864	1591.2	64.96	Si
SLV 14	1.32	-31265	5384.43	91745	4424.28	0.822	No, M>Mu
SLV 14	4.43	-15665	-139.9	45969	5550.13	39.671	Si
SLV 7	1.32	2069	-1376.19	0	0	0	No, Trazione
SLV 7	4.43	-980	31.98	2877	543.76	17.002	Si
SLV 3	1.32	1328	-3680.11	0	0	0	No, Trazione
SLV 3	4.43	-3021	24.49	8864	1591.2	64.96	Si
SLV 1	1.32	-6682	-3107.36	19607	3186.1	1.025	Si
SLV 1	4.43	-7284	-18.38	21374	3413.35	185.711	Si
SLV 8	1.32	2069	-1376.19	0	0	0	No, Trazione
SLV 8	4.43	-980	31.98	2877	543.76	17.002	Si

Verifica a taglio nel piano secondo D.M. 17-01-18 (N.T.C.) §7.8.2.2.2 con rottura per scorrimento in combinazioni non sismiche, γM = 3

Comb.	Quota	N	V par	M	σ0	σN	I'	fvd	Vt scorr.	Vt fess.diag.	Vt,lim	c.s.	Verifica
SLU 74	1.32	-21024	2538	1226.25		61693	1.1359	10833	3692			1.45	Si
SLU 74	4.43	-13220	395	-64.44		38792	1.1359	10728	3656			9.25	Si
SLU 83	1.32	-21649	2630	1272.34		63526	1.1359	10833	3692			1.4	Si
SLU 83	4.43	-13640	403	-57.21		40025	1.1359	10833	3692			9.16	Si
SLU 82	1.32	-20985	2548	1199.32		61580	1.1359	10833	3692			1.45	Si
SLU 82	4.43	-13309	344	-70.42		39055	1.1359	10763	3668			10.65	Si
SLU 81	1.32	-21482	2597	1252.87		63036	1.1359	10833	3692			1.42	Si
SLU 81	4.43	-13509	400	-55.69		39642	1.1359	10833	3692			9.23	Si
SLU 75	1.32	-20528	2489	1172.7		60236	1.1359	10833	3692			1.48	Si
SLU 75	4.43	-13020	340	-79.17		38205	1.1359	10650	3629			10.69	Si
SLU 77	1.32	-21191	2571	1245.73		62183	1.1359	10833	3692			1.44	Si
SLU 77	4.43	-13350	398	-65.96		39175	1.1359	10779	3673			9.23	Si
SLU 78	1.32	-20695	2522	1192.18		60726	1.1359	10833	3692			1.46	Si
SLU 78	4.43	-13150	342	-80.69		38588	1.1359	10701	3647			10.65	Si
SLU 80	1.32	-20638	2514	1188.84		60560	1.1359	10833	3692			1.47	Si
SLU 80	4.43	-13115	341	-79.74		38483	1.1359	10687	3642			10.69	Si
SLU 79	1.32	-21134	2563	1242.39		62016	1.1359	10833	3692			1.44	Si
SLU 79	4.43	-13315	396	-65.01		39070	1.1359	10765	3669			9.25	Si
SLU 84	1.32	-21152	2581	1218.8		62070	1.1359	10833	3692			1.43	Si
SLU 84	4.43	-13440	347	-71.94		39438	1.1359	10814	3685			10.61	Si

Verifica a taglio nel piano secondo D.M. 17-01-18 (N.T.C.) §7.8.2.2.2 con rottura per scorrimento in combinazioni sismiche, γM = 2

Comb.	Quota	N	V par	M	σ0	σN	I'	fvd	Vt scorr.	Vt fess.diag.	Vt,lim	c.s.	Verifica
SLV 8	1.32	2069	-1572	-1376.19		0	0	8333	0			0	No, Vu<V
SLV 8	4.43	-980	-1384	31.98		2877	1.1359	8909	3036			2.19	Si
SLV 7	1.32	2069	-1572	-1376.19		0	0	8333	0			0	No, Vu<V
SLV 7	4.43	-980	-1384	31.98		2877	1.1359	8909	3036			2.19	Si
SLV 15	1.32	-23255	8020	4811.68		71564	1.0832	16250	5281			0.66	No, Vu<V
SLV 15	4.43	-11402	1191	-97.03		33459	1.1359	15025	5120			4.3	Si
SLV 14	1.32	-31265	8829	5384.43		91745	1.1359	16250	5538			0.63	No, Vu<V
SLV 14	4.43	-15665	1964	-139.9		45969	1.1359	16250	5538			2.82	Si
SLV 16	1.32	-23255	8020	4811.68		71564	1.0832	16250	5281			0.66	No, Vu<V
SLV 16	4.43	-11402	1191	-97.03		33459	1.1359	15025	5120			4.3	Si
SLV 2	1.32	-6682	-4476	-3107.36		72132	0.3088	16250	1505			0.34	No, Vu<V
SLV 2	4.43	-7284	-611	-18.38		21374	1.1359	12608	4297			7.03	Si
SLV 4	1.32	1328	-5285	-3680.11		0	0	8333	0			0	No, Vu<V
SLV 4	4.43	-3021	-1383	24.49		8864	1.1359	10106	3444			2.49	Si
SLV 13	1.32	-31265	8829	5384.43		91745	1.1359	16250	5538			0.63	No, Vu<V
SLV 13	4.43	-15665	1964	-139.9		45969	1.1359	16250	5538			2.82	Si
SLV 1	1.32	-6682	-4476	-3107.36		72132	0.3088	16250	1505			0.34	No, Vu<V
SLV 1	4.43	-7284	-611	-18.38		21374	1.1359	12608	4297			7.03	Si
SLV 3	1.32	1328	-5285	-3680.11		0	0	8333	0			0	No, Vu<V
SLV 3	4.43	-3021	-1383	24.49		8864	1.1359	10106	3444			2.49	Si

Verifica a pressoflessione fuori piano D.M. 17-01-18 (N.T.C.)

quota 3.16 Wa 0.05 denominatore 8 γM = 2

Comb.	fd	Sa	σ0	N	M	Mc	Coeff.s.	Verifica
SLV 7	143750	0.31	0	-598	109.73	0	0	No, e>t/2
SLV 8	143750	0.31	0	-598	109.73	0	0	No, e>t/2
SLV 12	143750	0.31	8884	-3027	109.73	421.1	3.84	Si
SLV 11	143750	0.31	8884	-3027	109.73	421.1	3.84	Si
SLV 4	143750	0.31	13941	-4751	109.73	631.33	5.75	Si
SLV 3	143750	0.31	13941	-4751	109.73	631.33	5.75	Si
SLV 1	143750	0.31	31518	-10741	109.73	1195.53	10.9	Si
SLV 2	143750	0.31	31518	-10741	109.73	1195.53	10.9	Si
SLV 16	143750	0.31	37708	-12850	109.73	1332.69	12.15	Si

Comb.	fd	Sa	σ0	N	M	Mc	Coeff.s.	Verifica
SLV 15	143750	0.31	37708	-12850	109.73	1332.69	12.15	Si

Verifica dei meccanismi locali di collasso con analisi cinematica lineare

forza di aggancio al piano = 0 quota mezzeria = 3.16 Wa = 0.05 Ta = 0.0754

Comb.	N top	N base	V orto	α0	M*	e*	a0*	aLim	Verifica
SLV 7	-1178	2069	10	0	0	0	0	6.92171	No, Trazione
SLV 8	-1178	2069	10	0	0	0	0	6.92171	No, Trazione
SLV 4	-3349	1328	-29	0	0	0	0	7.86415	No, Trazione
SLV 3	-3349	1328	-29	0	0	0	0	7.86415	No, Trazione
SLV 16	-9657	-23255	43	0.041	1160.2	0.955	0.62401	7.86415	No
SLV 15	-9657	-23255	43	0.041	1160.2	0.955	0.62401	7.86415	No
SLV 14	-13411	-31265	31	0.042	1542	0.965	0.62891	7.86415	No
SLV 13	-13411	-31265	31	0.042	1542	0.965	0.62891	7.86415	No
SLV 2	-7103	-6682	-41	0.041	900.9	0.944	0.63609	7.86415	No
SLV 1	-7103	-6682	-41	0.041	900.9	0.944	0.63609	7.86415	No

Tabella dei coefficienti di sicurezza minimi

Stato limite	Coeff.s.	Comb.	Verifica
PF_SLU	2.127	SLU 83	Si
V_SLU	1.404	SLU 83	Si
PF_SLV	0	SLV 8	No
V_SLV	0	SLV 3	No
PFFP_SLV	0	SLV 7	No
R_SLV	0	SLV 8	No

Maschio 90

Verifiche condotte secondo D.M. 17-01-18 (N.T.C.)

Dati geometrici

X ini.	Y ini.	X fin.	Y fin.	Quota i.	Quota.s	l	Sp.	h netta	h ini.	h fin.	a	a.s.,sx	a.s.,dx
-8.027	-4.697	-7.763	-4.697	L3	L4	0.264	0.3	3.68	3.68	3.68			

Caratteristiche del materiale

(Circolare 7 21-01-19 C8.5.I) Muratura in mattoni pieni e malta di calce LC2_Corti

fb	fk	fvk0	fmedio	τ0	fv0	μ	ϕ	fv,lim	E	G	FC
600000			345000	9000	20000	0.58	0.77	32500	320000000	128000000	1.2

Verifica a pressoflessione nel piano secondo D.M. 17-01-18 NTC §7.8.2.2.1 in combinazioni non sismiche, γM = 3

Comb.	Quota	N	M	σ0	Mu	c.s.	Verifica
SLU 60	1.32	-5604	-155.16	70744	97.33	0.627	No, M>Mu
SLU 60	4.43	-3222	73.83	40671	213.01	2.885	Si
SLU 83	1.32	-6068	-167.91	76602	47.77	0.285	No, M>Mu
SLU 83	4.43	-3564	81.15	44988	210.68	2.596	Si
SLU 77	1.32	-5977	-167.79	75443	58.27	0.347	No, M>Mu
SLU 77	4.43	-3537	81.57	44641	211.05	2.587	Si
SLU 81	1.32	-5997	-164.72	75697	56	0.34	No, M>Mu
SLU 81	4.43	-3473	78.68	43840	211.77	2.692	Si
SLU 58	1.32	-5571	-158.23	70327	100.52	0.635	No, M>Mu
SLU 58	4.43	-3295	77.02	41587	212.92	2.764	Si
SLU 56	1.32	-5584	-158.23	70490	99.28	0.627	No, M>Mu
SLU 56	4.43	-3286	76.73	41473	212.94	2.775	Si
SLU 62	1.32	-5676	-158.34	71648	90.25	0.57	No, M>Mu
SLU 62	4.43	-3313	76.31	41820	212.86	2.79	Si
SLU 79	1.32	-5964	-167.79	75281	59.72	0.356	No, M>Mu
SLU 79	4.43	-3546	81.87	44755	210.93	2.576	Si
SLU 69	1.32	-5565	-160.1	70250	101.11	0.632	No, M>Mu
SLU 69	4.43	-3281	77.48	41418	212.95	2.748	Si
SLU 74	1.32	-5905	-164.61	74538	66.23	0.402	No, M>Mu
SLU 74	4.43	-3446	79.1	43493	212.03	2.681	Si

Verifica a pressoflessione nel piano secondo D.M. 17-01-18 NTC §7.8.2.2.1 in combinazioni sismiche, γM = 2

Comb.	Quota	N	M	σ0	Mu	c.s.	Verifica
SLV 5	1.32	-15059	-307.18	190095	0	0	No, Rottura per schiacciamento
SLV 5	4.43	3043	-94.38	0	0	0	No, Trazione
SLV 3	1.32	-1036	-404.28	0	0	0	No, e>l/2
SLV 3	4.43	-2814	109.19	35519	263.53	2.413	Si
SLV 1	1.32	-7539	-461	95167	220.13	0.478	No, M>Mu
SLV 1	4.43	254	17.58	0	0	0	No, Trazione
SLV 9	1.32	-15002	-118.61	189372	0	0	No, Rottura per schiacciamento
SLV 9	4.43	2366	-98.74	0	0	0	No, Trazione
SLV 7	1.32	6618	-118.1	0	0	0	No, Trazione
SLV 7	4.43	-7183	210.99	90677	244.6	1.159	Si
SLV 6	1.32	-15059	-307.18	190095	0	0	No, Rottura per schiacciamento
SLV 6	4.43	3043	-94.38	0	0	0	No, Trazione
SLV 2	1.32	-7539	-461	95167	220.13	0.478	No, M>Mu
SLV 2	4.43	254	17.58	0	0	0	No, Trazione
SLV 10	1.32	-15002	-118.61	189372	0	0	No, Rottura per schiacciamento
SLV 10	4.43	2366	-98.74	0	0	0	No, Trazione
SLV 8	1.32	6618	-118.1	0	0	0	No, Trazione
SLV 8	4.43	-7183	210.99	90677	244.6	1.159	Si
SLV 4	1.32	-1036	-404.28	0	0	0	No, e>l/2

Comb.	Quota	N	M	σ0	Mu	c.s.	Verifica
SLV 4	4.43	-2814	109.19	35519	263.53	2.413	Si

Verifica a taglio nel piano secondo D.M. 17-01-18 (N.T.C.) §7.8.2.2.2 con rottura per scorrimento in combinazioni non sismiche, γM = 3

Comb.	Quota	N	V par	M	σ0	σN	I'	fvd	Vt scorr.	Vt fess.diag.	Vt,lim	c.s.	Verifica
SLU 77	1.32	-5977	-95	-167.79		75443	0.2641	10833	858			9.04	Si
SLU 77	4.43	-3537	315	81.57		44641	0.2641	10833	858			2.73	Si
SLU 62	1.32	-5676	-91	-158.34		71648	0.2641	10833	858			9.39	Si
SLU 62	4.43	-3313	295	76.31		41820	0.2641	10833	858			2.91	Si
SLU 60	1.32	-5604	-93	-155.16		70744	0.2641	10833	858			9.25	Si
SLU 60	4.43	-3222	295	73.83		40671	0.2641	10833	858			2.91	Si
SLU 79	1.32	-5964	-94	-167.79		75281	0.2641	10833	858			9.18	Si
SLU 79	4.43	-3546	313	81.87		44755	0.2641	10833	858			2.75	Si
SLU 83	1.32	-6068	-97	-167.91		76602	0.2641	10833	858			8.85	Si
SLU 83	4.43	-3564	324	81.15		44988	0.2641	10833	858			2.65	Si
SLU 81	1.32	-5997	-98	-164.72		75697	0.2641	10833	858			8.72	Si
SLU 81	4.43	-3473	323	78.68		43840	0.2641	10833	858			2.65	Si
SLU 74	1.32	-5905	-96	-164.61		74538	0.2641	10833	858			8.9	Si
SLU 74	4.43	-3446	314	79.1		43493	0.2641	10833	858			2.73	Si
SLU 69	1.32	-5565	-90	-160.1		70250	0.2641	10833	858			9.51	Si
SLU 69	4.43	-3281	286	77.48		41418	0.2641	10833	858			3.01	Si
SLU 53	1.32	-5513	-91	-155.04		69585	0.2641	10833	858			9.45	Si
SLU 53	4.43	-3195	285	74.25		40325	0.2641	10833	858			3.01	Si
SLU 56	1.32	-5584	-89	-158.23		70490	0.2641	10833	858			9.61	Si
SLU 56	4.43	-3286	286	76.73		41473	0.2641	10833	858			3	Si

Verifica a taglio nel piano secondo D.M. 17-01-18 (N.T.C.) §7.8.2.2.2 con rottura per scorrimento in combinazioni sismiche, γM = 2

Comb.	Quota	N	V par	M	σ0	σN	I'	fvd	Vt scorr.	Vt fess.diag.	Vt,lim	c.s.	Verifica
SLV 4	1.32	-1036	163	-404.28		0	0	8333	0			0	No, Vu<V
SLV 4	4.43	-2814	504	109.19		35519	0.2641	15437	1223			2.43	Si
SLV 5	1.32	-15059	-1237	-307.18		190095	0.2641	16250	1287			1.04	Si
SLV 5	4.43	3043	1460	-94.38		0	0	8333	0			0	No, Vu<V
SLV 6	1.32	-15059	-1237	-307.18		190095	0.2641	16250	1287			1.04	Si
SLV 6	4.43	3043	1460	-94.38		0	0	8333	0			0	No, Vu<V
SLV 3	1.32	-1036	163	-404.28		0	0	8333	0			0	No, Vu<V
SLV 3	4.43	-2814	504	109.19		35519	0.2641	15437	1223			2.43	Si
SLV 7	1.32	6618	1031	-118.1		0	0	8333	0			0	No, Vu<V
SLV 7	4.43	-7183	-660	210.99		90677	0.2641	16250	1287			1.95	Si
SLV 10	1.32	-15002	-1173	-118.61		189372	0.2641	16250	1287			1.1	Si
SLV 10	4.43	2366	1098	-98.74		0	0	8333	0			0	No, Vu<V
SLV 1	1.32	-7539	-517	-461		118172	0.2127	16250	1037			2	Si
SLV 1	4.43	254	1140	17.58		0	0	8333	0			0	No, Vu<V
SLV 9	1.32	-15002	-1173	-118.61		189372	0.2641	16250	1287			1.1	Si
SLV 9	4.43	2366	1098	-98.74		0	0	8333	0			0	No, Vu<V
SLV 8	1.32	6618	1031	-118.1		0	0	8333	0			0	No, Vu<V
SLV 8	4.43	-7183	-660	210.99		90677	0.2641	16250	1287			1.95	Si
SLV 2	1.32	-7539	-517	-461		118172	0.2127	16250	1037			2	Si
SLV 2	4.43	254	1140	17.58		0	0	8333	0			0	No, Vu<V

Verifica a pressoflessione fuori piano D.M. 17-01-18 (N.T.C.)

quota 3.16 Wa 0.05 denominatore 8 γM = 2

Comb.	fd	Sa	σ0	N	M	Mc	Coeff.s.	Verifica
SLV 5	143750	0.31	11154	-884	25.51	120.44	4.72	Si
SLV 6	143750	0.31	11154	-884	25.51	120.44	4.72	Si
SLV 1	143750	0.31	12633	-1001	25.51	134.6	5.28	Si
SLV 2	143750	0.31	12633	-1001	25.51	134.6	5.28	Si
SLV 9	143750	0.31	24069	-1907	25.51	229.67	9	Si
SLV 10	143750	0.31	24069	-1907	25.51	229.67	9	Si
SLV 3	143750	0.31	26817	-2124	25.51	248.73	9.75	Si
SLV 4	143750	0.31	26817	-2124	25.51	248.73	9.75	Si
SLV 11	143750	0.31	71346	-5652	25.51	352.77	13.83	Si
SLV 12	143750	0.31	71346	-5652	25.51	352.77	13.83	Si

Verifica dei meccanismi locali di collasso con analisi cinematica lineare

forza di aggancio al piano = 0 quota mezzeria = 3.16 Wa = 0.05 Ta = 0.0754

Comb.	N top	N base	V orto	α0	M*	e*	a0*	aLim	Verifica
SLV 12	-279	6675	6	0	0	0	0	6.92171	No, Trazione
SLV 8	-200	6618	4	0	0	0	0	6.92171	No, Trazione
SLV 7	-200	6618	4	0	0	0	0	6.92171	No, Trazione
SLV 11	-279	6675	6	0	0	0	0	6.92171	No, Trazione
SLV 2	-2801	-7539	-4	0.043	326.2	0.962	0.64864	7.86415	No
SLV 1	-2801	-7539	-4	0.043	326.2	0.962	0.64864	7.86415	No
SLV 13	-3064	-7348	2	0.043	353	0.965	0.6546	7.86415	No
SLV 14	-3064	-7348	2	0.043	353	0.965	0.6546	7.86415	No
SLV 15	-1822	-845	5	0.044	226.7	0.948	0.66958	7.86415	No
SLV 16	-1822	-845	5	0.044	226.7	0.948	0.66958	7.86415	No

Tabella dei coefficienti di sicurezza minimi

Stato limite	Coeff.s.	Comb.	Verifica
PF_SLU	0.285	SLU 83	No
V_SLU	2.647	SLU 83	Si
PF_SLV	0	SLV 12	No
V_SLV	0	SLV 1	No
PFFP_SLV	4.722	SLV 5	Si
R_SLV	0	SLV 12	No

Maschio 91

Verifiche condotte secondo D.M. 17-01-18 (N.T.C.)

Dati geometrici

X ini.	Y ini.	X fin.	Y fin.	Quota i.	Quota.s	l	Sp.	h netta	h ini.	h fin.	a	a.s.,sx	a.s.,dx
-9.448	-3.169	-11.003	-3.169	L3	L4	1.555	0.28	3.68	3.68	3.68			

Caratteristiche del materiale

(Circolare 7 21-01-19 C8.5.I) Muratura in mattoni pieni e malta di calce LC2_Corti

fb	fk	fvk0	fmedio	τ0	fv0	μ	ϕ	fv,lim	E	G	FC
600000			345000	9000	20000	0.58	0.77	32500	320000000	128000000	1.2

Verifica a pressoflessione nel piano secondo D.M. 17-01-18 NTC §7.8.2.2.1 in combinazioni non sismiche, γM = 3

Comb.	Quota	N	M	σ0	Mu	c.s.	Verifica
SLU 31	1.32	-2667	1979.33	6126	1917.63	0.969	No, M>Mu
SLU 31	3.42	-11916	1483.88	27370	6151.23	4.145	Si
SLU 42	1.32	-2776	2101.43	6376	1989.17	0.947	No, M>Mu
SLU 42	3.42	-12665	1630.25	29091	6330.02	3.883	Si
SLU 81	1.32	-3452	2440.68	7929	2422.47	0.993	No, M>Mu
SLU 81	3.42	-14836	1985.49	34077	6708.97	3.379	Si
SLU 34	1.32	-2729	1977.84	6269	1958.46	0.99	No, M>Mu
SLU 34	3.42	-12026	1546.31	27622	6179.02	3.996	Si
SLU 84	1.32	-3495	2444.56	8028	2449.37	1.002	Si
SLU 84	3.42	-14963	1998.01	34368	6724.68	3.366	Si
SLU 33	1.32	-2771	1989.32	6366	1986.19	0.998	No, M>Mu
SLU 33	3.42	-12130	1576.04	27861	6204.8	3.937	Si
SLU 39	1.32	-2733	2097.55	6277	1960.91	0.935	No, M>Mu
SLU 39	3.42	-12539	1617.73	28801	6301.58	3.895	Si
SLU 41	1.32	-2795	2096.06	6419	2001.57	0.955	No, M>Mu
SLU 41	3.42	-12649	1680.16	29053	6326.37	3.765	Si
SLU 82	1.32	-3433	2446.05	7885	2410.62	0.986	No, M>Mu
SLU 82	3.42	-14853	1935.58	34115	6711.05	3.467	Si
SLU 40	1.32	-2714	2102.92	6234	1948.46	0.927	No, M>Mu
SLU 40	3.42	-12555	1567.82	28838	6305.31	4.022	Si

Verifica a pressoflessione nel piano secondo D.M. 17-01-18 NTC §7.8.2.2.1 in combinazioni sismiche, γM = 2

Comb.	Quota	N	M	σ0	Mu	c.s.	Verifica
SLV 3	1.32	-1785	3813.13	0	0	0	No, e>l/2
SLV 3	3.42	-14366	-2037.23	32997	8152.43	4.002	Si
SLV 14	1.32	-3351	-649.52	7697	2441.11	3.758	Si
SLV 14	3.42	-5435	4853.8	0	0	0	No, e>l/2
SLV 8	1.32	-1449	2490.01	0	0	0	No, e>l/2
SLV 8	3.42	-5648	1797.27	12973	3924.81	2.184	Si
SLV 7	1.32	-1449	2490.01	0	0	0	No, e>l/2
SLV 7	3.42	-5648	1797.27	12973	3924.81	2.184	Si
SLV 4	1.32	-1785	3813.13	0	0	0	No, e>l/2
SLV 4	3.42	-14366	-2037.23	32997	8152.43	4.002	Si
SLV 12	1.32	-1744	1198.45	4006	1311.43	1.094	Si
SLV 12	3.42	-1863	4145.98	0	0	0	No, e>l/2
SLV 1	1.32	-2367	3655.68	0	0	0	No, e>l/2
SLV 1	3.42	-18053	-2975.23	41465	9272	3.116	Si
SLV 2	1.32	-2367	3655.68	0	0	0	No, e>l/2
SLV 2	3.42	-18053	-2975.23	41465	9272	3.116	Si
SLV 13	1.32	-3351	-649.52	7697	2441.11	3.758	Si
SLV 13	3.42	-5435	4853.8	0	0	0	No, e>l/2
SLV 11	1.32	-1744	1198.45	4006	1311.43	1.094	Si
SLV 11	3.42	-1863	4145.98	0	0	0	No, e>l/2

Verifica a taglio nel piano secondo D.M. 17-01-18 (N.T.C.) §7.8.2.2.2 con rottura per scorrimento in combinazioni non sismiche, γM = 3

Comb.	Quota	N	V par	M	σ0	σN	l'	fvd	Vt scorr.	Vt fess.diag.	Vt,lim	c.s.	Verifica
SLU 82	1.32	-3433	4832	2446.05		62937	0.1948	10833	591			0.12	No, Vu<V
SLU 82	3.42	-14853	5412	1935.58		34115	1.5549	10104	4399			0.81	No, Vu<V
SLU 84	1.32	-3495	4818	2444.56		53347	0.234	10833	710			0.15	No, Vu<V
SLU 84	3.42	-14963	5394	1998.01		34368	1.5549	10138	4414			0.82	No, Vu<V
SLU 40	1.32	-2714	4122	2102.92		1251264	0.0077	10833	23			0.01	No, Vu<V
SLU 40	3.42	-12555	4624	1567.82		28838	1.5549	9401	4093			0.89	No, Vu<V
SLU 34	1.32	-2729	3920	1977.84		61621	0.1582	10833	480			0.12	No, Vu<V
SLU 34	3.42	-12026	4392	1546.31		27622	1.5549	9239	4022			0.92	No, Vu<V
SLU 41	1.32	-2795	4067	2096.06		121174	0.0824	10833	250			0.06	No, Vu<V
SLU 41	3.42	-12649	4556	1680.16		29053	1.5549	9429	4105			0.9	No, Vu<V
SLU 33	1.32	-2771	3932	1989.32		55337	0.1789	10833	543			0.14	No, Vu<V
SLU 33	3.42	-12130	4403	1576.04		27861	1.5549	9270	4036			0.92	No, Vu<V
SLU 42	1.32	-2776	4108	2101.43		161908	0.0612	10833	186			0.05	No, Vu<V
SLU 42	3.42	-12665	4606	1630.25		29091	1.5549	9434	4107			0.89	No, Vu<V
SLU 31	1.32	-2667	3934	1979.33		89861	0.106	10833	322			0.08	No, Vu<V
SLU 31	3.42	-11916	4409	1483.88		27370	1.5549	9205	4007			0.91	No, Vu<V
SLU 81	1.32	-3452	4791	2440.68		58374	0.2112	10833	641			0.13	No, Vu<V
SLU 81	3.42	-14836	5362	1985.49		34077	1.5549	10099	4397			0.82	No, Vu<V
SLU 39	1.32	-2733	4081	2097.55		328215	0.0297	10833	90			0.02	No, Vu<V
SLU 39	3.42	-12539	4574	1617.73		28801	1.5549	9396	4091			0.89	No, Vu<V

Verifica a taglio nel piano secondo D.M. 17-01-18 (N.T.C.) §7.8.2.2.2 con rottura per scorrimento in combinazioni sismiche, γM = 2

Comb.	Quota	N	V par	M	σ0	σN	l'	fvd	Vt scorr.	Vt fess.diag.	Vt,lim	c.s.	Verifica
SLV 8	1.32	-1449	3804	2490.01		0	0	8333	0			0	No, Vu<V
SLV 8	3.42	-5648	2174	1797.27		14642	1.3777	11262	4344			2	Si
SLV 13	1.32	-3351	-1393	-649.52		7697	1.5549	9873	4298			3.09	Si
SLV 13	3.42	-5435	-571	4853.8		0	0	8333	0			0	No, Vu<V
SLV 14	1.32	-3351	-1393	-649.52		7697	1.5549	9873	4298			3.09	Si

Comb.	Quota	N	V par	M	σ0	σN	l'	fvd	Vt scorr.	Vt fess.diag.	Vt,lim	c.s.	Verifica
SLV 14	3.42	-5435	-571	4853.8		0	0	8333	0			0	No, Vu<V
SLV 3	1.32	-1785	7742	3813.13		0	0	8333	0			0	No, Vu<V
SLV 3	3.42	-14366	7651	-2037.23		32997	1.5549	14933	6501			0.85	No, Vu<V
SLV 12	1.32	-1744	917	1198.45		23000	0.2708	12933	981			1.07	Si
SLV 12	3.42	-1863	-807	4145.98		0	0	8333	0			0	No, Vu<V
SLV 2	1.32	-2367	8230	3655.68		0	0	8333	0			0	No, Vu<V
SLV 2	3.42	-18053	9365	-2975.23		41465	1.5549	16250	7075			0.76	No, Vu<V
SLV 4	1.32	-1785	7742	3813.13		0	0	8333	0			0	No, Vu<V
SLV 4	3.42	-14366	7651	-2037.23		32997	1.5549	14933	6501			0.85	No, Vu<V
SLV 7	1.32	-1449	3804	2490.01		0	0	8333	0			0	No, Vu<V
SLV 7	3.42	-5648	2174	1797.27		14642	1.3777	11262	4344			2	Si
SLV 1	1.32	-2367	8230	3655.68		0	0	8333	0			0	No, Vu<V
SLV 1	3.42	-18053	9365	-2975.23		41465	1.5549	16250	7075			0.76	No, Vu<V
SLV 11	1.32	-1744	917	1198.45		23000	0.2708	12933	981			1.07	Si
SLV 11	3.42	-1863	-807	4145.98		0	0	8333	0			0	No, Vu<V

Verifica a pressoflessione fuori piano D.M. 17-01-18 (N.T.C.)

quota 3.16 Wa 0.05 denominatore 8 γM = 2

Comb.	fd	Sa	σ0	N	M	Mc	Coeff.s.	Verifica
SLV 12	143750	0.31	2553	-1111	140.4	152.34	1.09	Si
SLV 11	143750	0.31	2553	-1111	140.4	152.34	1.09	Si
SLV 15	143750	0.31	3300	-1437	140.4	195.73	1.39	Si
SLV 16	143750	0.31	3300	-1437	140.4	195.73	1.39	Si
SLV 8	143750	0.31	10255	-4465	140.4	572.6	4.08	Si
SLV 7	143750	0.31	10255	-4465	140.4	572.6	4.08	Si
SLV 14	143750	0.31	11643	-5069	140.4	642.06	4.57	Si
SLV 13	143750	0.31	11643	-5069	140.4	642.06	4.57	Si
SLV 4	143750	0.31	28975	-12615	140.4	1347.26	9.6	Si
SLV 3	143750	0.31	28975	-12615	140.4	1347.26	9.6	Si

Verifica dei meccanismi locali di collasso con analisi cinematica lineare

forza di aggancio al piano = 0 quota mezzeria = 3.16 Wa = 0.05 Ta = 0.0808

Comb.	N top	N base	V orto	α0	M*	e*	a0*	aLim	Verifica
SLV 8	-5101	-1449	-150	0.024	749.6	0.921	0.37161	7.42296	No
SLV 7	-5101	-1449	-150	0.024	749.6	0.921	0.37161	7.42296	No
SLV 12	-6367	-1744	-131	0.028	877	0.93	0.44203	7.42296	No
SLV 11	-6367	-1744	-131	0.028	877	0.93	0.44203	7.42296	No
SLV 10	-15123	-3687	153	0.032	1765.4	0.962	0.4849	7.42296	No
SLV 9	-15123	-3687	153	0.032	1765.4	0.962	0.4849	7.42296	No
SLV 13	-13536	-3351	76	0.037	1604	0.958	0.55589	8.50261	No
SLV 14	-13536	-3351	76	0.037	1604	0.958	0.55589	8.50261	No
SLV 3	-6688	-1785	-72	0.036	909.4	0.932	0.56057	8.50261	No
SLV 4	-6688	-1785	-72	0.036	909.4	0.932	0.56057	8.50261	No

Tabella dei coefficienti di sicurezza minimi

Stato limite	Coeff.s.	Comb.	Verifica
PF_SLU	0.927	SLU 40	No
V_SLU	0.006	SLU 40	No
PF_SLV	0	SLV 1	No
V_SLV	0	SLV 1	No
PFFP_SLV	1.085	SLV 11	Si
R_SLV	0.05	SLV 7	No

Maschio 92

Verifiche condotte secondo D.M. 17-01-18 (N.T.C.)

Dati geometrici

X ini.	Y ini.	X fin.	Y fin.	Quota i.	Quota.s	l	Sp.	h netta	h ini.	h fin.	a	a.s.,sx	a.s.,dx
-7.763	-4.697	-7.763	-4.403	L3	L4	0.293	0.28	3.68	3.68	3.68			

Caratteristiche del materiale

(Circolare 7 21-01-19 C8.5.I) Muratura in mattoni pieni e malta di calce LC2_Corti

fb	fk	fvk0	fmedio	τ0	fv0	μ	ϕ	fv,lim	E	G	FC
600000			345000	9000	20000	0.58	0.77	32500	320000000	128000000	1.2

Verifica a pressoflessione nel piano secondo D.M. 17-01-18 NTC §7.8.2.2.1 in combinazioni non sismiche, γM = 3

Comb.	Quota	N	M	σ0	Mu	c.s.	Verifica
SLU 55	1.32	-4975	205.61	60542	187.42	0.912	No, M>Mu
SLU 55	4.43	-3120	-130.08	37977	244.4	1.879	Si
SLU 68	1.32	-4976	208.55	60560	187.31	0.898	No, M>Mu
SLU 68	4.43	-3111	-131.64	37864	244.3	1.856	Si
SLU 73	1.32	-5144	198.84	62607	174.68	0.878	No, M>Mu
SLU 73	4.43	-3314	-128.8	40329	245.49	1.906	Si
SLU 52	1.32	-4873	199.96	59301	194.47	0.973	No, M>Mu
SLU 52	4.43	-3050	-126.21	37113	243.58	1.93	Si
SLU 44	1.32	-4602	204.02	56013	210.94	1.034	Si
SLU 44	4.43	-2776	-125.19	33785	238.38	1.904	Si
SLU 47	1.32	-4704	209.67	57254	205.1	0.978	No, M>Mu
SLU 47	4.43	-2847	-129.06	34649	240.05	1.86	Si
SLU 76	1.32	-5246	204.49	63848	166.41	0.814	No, M>Mu
SLU 76	4.43	-3385	-132.66	41192	245.49	1.85	Si
SLU 65	1.32	-4874	202.9	59319	194.37	0.958	No, M>Mu
SLU 65	4.43	-3040	-127.78	37000	243.46	1.905	Si
SLU 34	1.32	-4539	204.2	55246	214.33	1.05	Si
SLU 34	4.43	-2741	-122.64	33356	237.47	1.936	Si

Comb.	Quota	N	M	σ0	Mu	c.s.	Verifica
SLU 26	1.32	-4269	208.27	51958	226.86	1.089	Si
SLU 26	4.43	-2467	-121.61	30028	228.57	1.879	Si

Verifica a pressoflessione nel piano secondo D.M. 17-01-18 NTC §7.8.2.2.1 in combinazioni sismiche, γM = 2

Comb.	Quota	N	M	σ0	Mu	c.s.	Verifica
SLV 11	1.32	-13404	1689.77	163132	0	0	No, Rottura per schiacciamento
SLV 11	4.43	19	-726.23	0	0	0	No, Trazione
SLV 8	1.32	-12045	1553.5	146593	0	0	No, Rottura per schiacciamento
SLV 8	4.43	-138	-662.08	0	0	0	No, e>l/2
SLV 5	1.32	7762	-1693.41	0	0	0	No, Trazione
SLV 5	4.43	-5222	651.4	63557	367.68	0.564	No, M>Mu
SLV 1	1.32	2415	-715.97	0	0	0	No, Trazione
SLV 1	4.43	-3626	266.52	44125	339.87	1.275	Si
SLV 2	1.32	2415	-715.97	0	0	0	No, Trazione
SLV 2	4.43	-3626	266.52	44125	339.87	1.275	Si
SLV 9	1.32	6403	-1557.14	0	0	0	No, Trazione
SLV 9	4.43	-5065	587.25	61649	368.25	0.627	No, M>Mu
SLV 7	1.32	-12045	1553.5	146593	0	0	No, Rottura per schiacciamento
SLV 7	4.43	-138	-662.08	0	0	0	No, e>l/2
SLV 10	1.32	6403	-1557.14	0	0	0	No, Trazione
SLV 10	4.43	-5065	587.25	61649	368.25	0.627	No, M>Mu
SLV 6	1.32	7762	-1693.41	0	0	0	No, Trazione
SLV 6	4.43	-5222	651.4	63557	367.68	0.564	No, M>Mu
SLV 12	1.32	-13404	1689.77	163132	0	0	No, Rottura per schiacciamento
SLV 12	4.43	19	-726.23	0	0	0	No, Trazione

Verifica a taglio nel piano secondo D.M. 17-01-18 (N.T.C.) §7.8.2.2.2 con rottura per scorrimento in combinazioni non sismiche, γM = 3

Comb.	Quota	N	V par	M	σ0	σN	I'	fvd	Vt scorr.	Vt fess.diag.	Vt,lim	c.s.	Verifica
SLU 10	1.32	-4166	252	199.67		50700	0.2935	10833	890			3.53	Si
SLU 10	4.43	-2406	-388	-116.18		29278	0.2935	9459	777			2	Si
SLU 26	1.32	-4269	263	208.27		51958	0.2935	10833	890			3.39	Si
SLU 26	4.43	-2467	-421	-121.61		30146	0.2923	9575	784			1.86	Si
SLU 13	1.32	-4268	259	205.32		51941	0.2935	10833	890			3.43	Si
SLU 13	4.43	-2477	-408	-120.05		30141	0.2935	9574	787			1.93	Si
SLU 23	1.32	-4167	255	202.62		50717	0.2935	10833	890			3.48	Si
SLU 23	4.43	-2396	-401	-117.75		29233	0.2928	9453	775			1.93	Si
SLU 5	1.32	-3998	266	209.39		50441	0.283	10833	859			3.22	Si
SLU 5	4.43	-2203	-445	-119.03		28293	0.2781	9328	726			1.63	Si
SLU 34	1.32	-4539	256	204.2		55246	0.2935	10833	890			3.48	Si
SLU 34	4.43	-2741	-383	-122.64		33356	0.2935	10003	822			2.15	Si
SLU 68	1.32	-4976	259	208.55		60560	0.2935	10833	890			3.44	Si
SLU 68	4.43	-3111	-404	-131.64		37864	0.2935	10604	871			2.16	Si
SLU 44	1.32	-4602	255	204.02		56013	0.2935	10833	890			3.48	Si
SLU 44	4.43	-2776	-409	-125.19		33785	0.2935	10060	827			2.02	Si
SLU 2	1.32	-3896	259	203.74		49113	0.2833	10833	859			3.31	Si
SLU 2	4.43	-2132	-426	-115.16		27378	0.2781	9206	717			1.68	Si
SLU 47	1.32	-4704	263	209.67		57254	0.2935	10833	890			3.39	Si
SLU 47	4.43	-2847	-428	-129.06		34649	0.2935	10175	836			1.95	Si

Verifica a taglio nel piano secondo D.M. 17-01-18 (N.T.C.) §7.8.2.2.2 con rottura per scorrimento in combinazioni sismiche, γM = 2

Comb.	Quota	N	V par	M	σ0	σN	I'	fvd	Vt scorr.	Vt fess.diag.	Vt,lim	c.s.	Verifica
SLV 7	1.32	-12045	2301	1553.5		807714	0.0533	16250	242			0.11	No, Vu<V
SLV 7	4.43	-138	-3812	-662.08		0	0	8333	0			0	No, Vu<V
SLV 9	1.32	6403	-2341	-1557.14		0	0	8333	0			0	No, Vu<V
SLV 9	4.43	-5065	4017	587.25		195826	0.0924	16250	420			0.1	No, Vu<V
SLV 5	1.32	7762	-2719	-1693.41		0	0	8333	0			0	No, Vu<V
SLV 5	4.43	-5222	4499	651.4		282698	0.066	16250	300			0.07	No, Vu<V
SLV 8	1.32	-12045	2301	1553.5		807714	0.0533	16250	242			0.11	No, Vu<V
SLV 8	4.43	-138	-3812	-662.08		0	0	8333	0			0	No, Vu<V
SLV 1	1.32	2415	-1403	-715.97		0	0	8333	0			0	No, Vu<V
SLV 1	4.43	-3626	2152	266.52		58952	0.2196	16250	999			0.46	No, Vu<V
SLV 6	1.32	7762	-2719	-1693.41		0	0	8333	0			0	No, Vu<V
SLV 6	4.43	-5222	4499	651.4		282698	0.066	16250	300			0.07	No, Vu<V
SLV 11	1.32	-13404	2679	1689.77		772290	0.062	16250	282			0.11	No, Vu<V
SLV 11	4.43	19	-4294	-726.23		0	0	8333	0			0	No, Vu<V
SLV 12	1.32	-13404	2679	1689.77		772290	0.062	16250	282			0.11	No, Vu<V
SLV 12	4.43	19	-4294	-726.23		0	0	8333	0			0	No, Vu<V
SLV 10	1.32	6403	-2341	-1557.14		0	0	8333	0			0	No, Vu<V
SLV 10	4.43	-5065	4017	587.25		195826	0.0924	16250	420			0.1	No, Vu<V
SLV 2	1.32	2415	-1403	-715.97		0	0	8333	0			0	No, Vu<V
SLV 2	4.43	-3626	2152	266.52		58952	0.2196	16250	999			0.46	No, Vu<V

Verifica a pressoflessione fuori piano D.M. 17-01-18 (N.T.C.)

quota 3.16 Wa 0.05 denominatore 8 γM = 2

Comb.	fd	Sa	σ0	N	M	Mc	Coeff.s.	Verifica
SLV 11	143750	0.31	0	1725	27.11	0	0	No, Trazione
SLV 12	143750	0.31	0	1725	27.11	0	0	No, Trazione
SLV 7	143750	0.31	0	1747	27.11	0	0	No, Trazione
SLV 8	143750	0.31	0	1747	27.11	0	0	No, Trazione
SLV 3	143750	0.31	20572	-1690	27.11	196.81	7.26	Si
SLV 4	143750	0.31	20572	-1690	27.11	196.81	7.26	Si
SLV 16	143750	0.31	21487	-1766	27.11	203.71	7.51	Si
SLV 15	143750	0.31	21487	-1766	27.11	203.71	7.51	Si
SLV 10	143750	0.31	99456	-8172	27.11	212.84	7.85	Si
SLV 9	143750	0.31	99456	-8172	27.11	212.84	7.85	Si

Verifica dei meccanismi locali di collasso con analisi cinematica lineare

forza di aggancio al piano = 0 quota mezzeria = 3.16 Wa = 0.05 Ta = 0.0808

Comb.	N top	N base	V orto	α0	M*	e*	a0*	aLim	Verifica
SLV 6	-750	7762	72	0	0	0	0	7.42296	No, Trazione
SLV 9	-1281	6403	70	0	0	0	0	7.42296	No, Trazione
SLV 1	-892	2415	23	0	0	0	0	8.50261	No, Trazione
SLV 2	-892	2415	23	0	0	0	0	8.50261	No, Trazione
SLV 5	-750	7762	72	0	0	0	0	7.42296	No, Trazione
SLV 10	-1281	6403	70	0	0	0	0	7.42296	No, Trazione
SLV 8	-2924	-12045	-73	0.019	340.3	0.963	0.28032	7.42296	No
SLV 7	-2924	-12045	-73	0.019	340.3	0.963	0.28032	7.42296	No
SLV 11	-3455	-13404	-74	0.021	394.3	0.967	0.31448	7.42296	No
SLV 12	-3455	-13404	-74	0.021	394.3	0.967	0.31448	7.42296	No

Tabella dei coefficienti di sicurezza minimi

Stato limite	Coeff.s.	Comb.	Verifica
PF_SLU	0.814	SLU 76	No
V_SLU	1.631	SLU 5	Si
PF_SLV	0	SLV 12	No
V_SLV	0	SLV 1	No
PFFP_SLV	0	SLV 12	No
R_SLV	0	SLV 10	No

Maschio 93

Verifiche condotte secondo D.M. 17-01-18 (N.T.C.)

Dati geometrici

X ini.	Y ini.	X fin.	Y fin.	Quota i.	Quota.s	l	Sp.	h netta	h ini.	h fin.	a	a.s.,sx	a.s.,dx
-7.763	-3.313	-7.763	-3.169	L3	L4	0.144	0.28	3.68	3.68	3.68			

Caratteristiche del materiale

(Circolare 7 21-01-19 C8.5.I) Muratura in mattoni pieni e malta di calce LC2_Corti

fb	fk	fvk0	fmedio	τ0	fv0	μ	ϕ	fv,lim	E	G	FC
600000			345000	9000	20000	0.58	0.77	32500	320000000	128000000	1.2

Verifica a pressoflessione nel piano secondo D.M. 17-01-18 NTC §7.8.2.2.1 in combinazioni non sismiche, γM = 3

Comb.	Quota	N	M	σ0	Mu	c.s.	Verifica
SLU 75	1.32	-2672	106.39	66098	36.36	0.342	No, M>Mu
SLU 75	4.43	-976	0.64	24138	49.56	77.119	Si
SLU 81	1.32	-2869	107.45	70970	26.66	0.248	No, M>Mu
SLU 81	4.43	-900	4.92	22256	47.19	9.582	Si
SLU 78	1.32	-2686	107.18	66461	35.7	0.333	No, M>Mu
SLU 78	4.43	-986	0.41	24405	49.87	121.02	Si
SLU 84	1.32	-2774	110.39	68631	31.53	0.286	No, M>Mu
SLU 84	4.43	-1005	0.78	24875	50.41	64.915	Si
SLU 79	1.32	-2775	104.4	68660	31.47	0.301	No, M>Mu
SLU 79	4.43	-885	4.17	21885	46.7	11.189	Si
SLU 77	1.32	-2796	105.03	69162	30.46	0.29	No, M>Mu
SLU 77	4.43	-891	4.33	22052	46.92	10.837	Si
SLU 83	1.32	-2883	108.24	71333	25.87	0.239	No, M>Mu
SLU 83	4.43	-910	4.69	22523	47.54	10.128	Si
SLU 80	1.32	-2666	106.56	65958	36.62	0.344	No, M>Mu
SLU 80	4.43	-980	0.26	24237	49.67	194.418	Si
SLU 82	1.32	-2759	109.61	68268	32.25	0.294	No, M>Mu
SLU 82	4.43	-995	1.01	24608	50.11	49.754	Si
SLU 74	1.32	-2781	104.24	68799	31.19	0.299	No, M>Mu
SLU 74	4.43	-881	4.56	21785	46.56	10.21	Si

Verifica a pressoflessione nel piano secondo D.M. 17-01-18 NTC §7.8.2.2.1 in combinazioni sismiche, γM = 2

Comb.	Quota	N	M	σ0	Mu	c.s.	Verifica
SLV 5	1.32	-3673	36.96	90861	67.96	1.839	Si
SLV 5	4.43	630	63.73	0	0	0	No, Trazione
SLV 6	1.32	-3673	36.96	90861	67.96	1.839	Si
SLV 6	4.43	630	63.73	0	0	0	No, Trazione
SLV 8	1.32	-312	134.1	0	0	0	No, e>l/2
SLV 8	4.43	-1728	-41.85	42753	81.09	1.938	Si
SLV 10	1.32	-3527	9.52	87246	72.79	7.646	Si
SLV 10	4.43	519	48.07	0	0	0	No, Trazione
SLV 2	1.32	-2667	102.97	65983	88.55	0.86	No, M>Mu
SLV 2	4.43	-67	45.04	0	0	0	No, e>l/2
SLV 4	1.32	-1659	132.11	0	0	0	No, e>l/2
SLV 4	4.43	-774	13.36	19150	47.11	3.526	Si
SLV 1	1.32	-2667	102.97	65983	88.55	0.86	No, M>Mu
SLV 1	4.43	-67	45.04	0	0	0	No, e>l/2
SLV 7	1.32	-312	134.1	0	0	0	No, e>l/2
SLV 7	4.43	-1728	-41.85	42753	81.09	1.938	Si
SLV 3	1.32	-1659	132.11	0	0	0	No, e>l/2
SLV 3	4.43	-774	13.36	19150	47.11	3.526	Si
SLV 9	1.32	-3527	9.52	87246	72.79	7.646	Si
SLV 9	4.43	519	48.07	0	0	0	No, Trazione

Verifica a taglio nel piano secondo D.M. 17-01-18 (N.T.C.) §7.8.2.2.2 con rottura per scorrimento in combinazioni non sismiche, γM = 3

Comb.	Quota	N	V par	M	σ0	σN	l'	fvd	Vt scorr.	Vt fess.diag.	Vt,lim	c.s.	Verifica
SLU 84	1.32	-2774	384	110.39		101971	0.0972	10833	295			0.77	No, Vu<V
SLU 84	4.43	-1005	58	0.78		24875	0.1444	8872	359			6.17	Si

Comb.	Quota	N	V par	M	σ0	σN	l'	fvd	Vt scorr.	Vt fess.diag.	Vt,lim	c.s.	Verifica
SLU 81	1.32	-2869	388	107.45		98354	0.1042	10833	316			0.82	No, Vu<V
SLU 81	4.43	-900	109	4.92		22256	0.1444	8523	345			3.17	Si
SLU 76	1.32	-2579	364	107.21		100304	0.0918	10833	279			0.76	No, Vu<V
SLU 76	4.43	-1032	22	-2.13		25539	0.1444	8961	362			16.82	Si
SLU 80	1.32	-2666	371	106.56		98530	0.0966	10833	293			0.79	No, Vu<V
SLU 80	4.43	-980	52	0.26		24237	0.1444	8787	355			6.83	Si
SLU 75	1.32	-2672	371	106.39		98295	0.0971	10833	294			0.79	No, Vu<V
SLU 75	4.43	-976	56	0.64		24138	0.1444	8774	355			6.37	Si
SLU 82	1.32	-2759	382	109.61		101204	0.0974	10833	295			0.77	No, Vu<V
SLU 82	4.43	-995	60	1.01		24608	0.1444	8837	357			5.94	Si
SLU 73	1.32	-2564	362	106.42		99511	0.092	10833	279			0.77	No, Vu<V
SLU 73	4.43	-1021	23	-1.9		25272	0.1444	8925	361			15.37	Si
SLU 77	1.32	-2796	379	105.03		96156	0.1038	10833	315			0.83	No, Vu<V
SLU 77	4.43	-891	102	4.33		22052	0.1444	8496	343			3.36	Si
SLU 78	1.32	-2686	373	107.18		99064	0.0968	10833	294			0.79	No, Vu<V
SLU 78	4.43	-986	54	0.41		24405	0.1444	8810	356			6.63	Si
SLU 83	1.32	-2883	390	108.24		99090	0.1039	10833	315			0.81	No, Vu<V
SLU 83	4.43	-910	107	4.69		22523	0.1444	8559	346			3.24	Si

Verifica a taglio nel piano secondo D.M. 17-01-18 (N.T.C.) §7.8.2.2.2 con rottura per scorrimento in combinazioni sismiche, γM = 2

Comb.	Quota	N	V par	M	σ0	σN	l'	fvd	Vt scorr.	Vt fess.diag.	Vt,lim	c.s.	Verifica
SLV 5	1.32	-3673	501	36.96		90861	0.1444	16250	657			1.31	Si
SLV 5	4.43	630	649	63.73		0	0	8333	0			0	No, Vu<V
SLV 7	1.32	-312	60	134.1		0	0	8333	0			0	No, Vu<V
SLV 7	4.43	-1728	-492	-41.85		42894	0.1439	16250	655			1.33	Si
SLV 9	1.32	-3527	462	9.52		87246	0.1444	16250	657			1.42	Si
SLV 9	4.43	519	640	48.07		0	0	8333	0			0	No, Vu<V
SLV 10	1.32	-3527	462	9.52		87246	0.1444	16250	657			1.42	Si
SLV 10	4.43	519	640	48.07		0	0	8333	0			0	No, Vu<V
SLV 4	1.32	-1659	260	132.11		0	0	8333	0			0	No, Vu<V
SLV 4	4.43	-774	-83	13.36		19150	0.1444	12163	492			5.96	Si
SLV 2	1.32	-2667	393	102.97		94572	0.1007	16250	458			1.17	Si
SLV 2	4.43	-67	260	45.04		0	0	8333	0			0	No, Vu<V
SLV 3	1.32	-1659	260	132.11		0	0	8333	0			0	No, Vu<V
SLV 3	4.43	-774	-83	13.36		19150	0.1444	12163	492			5.96	Si
SLV 8	1.32	-312	60	134.1		0	0	8333	0			0	No, Vu<V
SLV 8	4.43	-1728	-492	-41.85		42894	0.1439	16250	655			1.33	Si
SLV 1	1.32	-2667	393	102.97		94572	0.1007	16250	458			1.17	Si
SLV 1	4.43	-67	260	45.04		0	0	8333	0			0	No, Vu<V
SLV 6	1.32	-3673	501	36.96		90861	0.1444	16250	657			1.31	Si
SLV 6	4.43	630	649	63.73		0	0	8333	0			0	No, Vu<V

Verifica a pressoflessione fuori piano D.M. 17-01-18 (N.T.C.)

quota 3.16 Wa 0.05 denominatore 8 γM = 2

Comb.	fd	Sa	σ0	N	M	Mc	Coeff.s.	Verifica
SLV 1	143750	0.31	0	359	13.34	0	0	No, Trazione
SLV 9	143750	0.31	0	2061	13.34	0	0	No, Trazione
SLV 5	143750	0.31	0	2422	13.34	0	0	No, Trazione
SLV 2	143750	0.31	0	359	13.34	0	0	No, Trazione
SLV 6	143750	0.31	0	2422	13.34	0	0	No, Trazione
SLV 12	143750	0.31	124542	-5034	13.34	0	0	No, Rottura per schiacciamento
SLV 11	143750	0.31	124542	-5034	13.34	0	0	No, Rottura per schiacciamento
SLV 10	143750	0.31	0	2061	13.34	0	0	No, Trazione
SLV 7	143750	0.31	115624	-4674	13.34	35.15	2.64	Si
SLV 8	143750	0.31	115624	-4674	13.34	35.15	2.64	Si

Verifica dei meccanismi locali di collasso con analisi cinematica lineare

forza di aggancio al piano = 0 quota mezzeria = 3.16 Wa = 0.05 Ta = 0.0808

Comb.	N top	N base	V orto	α0	M*	e*	a0*	aLim	Verifica
SLV 12	638	-166	24	0	0	0	0	7.42296	No, Trazione
SLV 7	748	-312	30	0	0	0	0	7.42296	No, Trazione
SLV 4	60	-1659	8	0	0	0	0	8.50261	No, Trazione
SLV 11	638	-166	24	0	0	0	0	7.42296	No, Trazione
SLV 8	748	-312	30	0	0	0	0	7.42296	No, Trazione
SLV 3	60	-1659	8	0	0	0	0	8.50261	No, Trazione
SLV 10	-1692	-3527	-56	0.01	193.2	0.967	0.1549	7.42296	No
SLV 9	-1692	-3527	-56	0.01	193.2	0.967	0.1549	7.42296	No
SLV 14	-1004	-2180	-34	0.013	123.3	0.951	0.19646	8.50261	No
SLV 13	-1004	-2180	-34	0.013	123.3	0.951	0.19646	8.50261	No

Tabella dei coefficienti di sicurezza minimi

Stato limite	Coeff.s.	Comb.	Verifica
PF_SLU	0.239	SLU 83	No
V_SLU	0.765	SLU 76	No
PF_SLV	0	SLV 10	No
V_SLV	0	SLV 1	No
PFFP_SLV	0	SLV 10	No
R_SLV	0	SLV 12	No

Maschio 94

Verifiche condotte secondo D.M. 17-01-18 (N.T.C.)

Dati geometrici

X ini.	Y ini.	X fin.	Y fin.	Quota i.	Quota.s	l	Sp.	h netta	h ini.	h fin.	a	a.s.,sx	a.s.,dx
-6.268	-3.169	-6.268	1.141	L3	L4	4.31	0.14	3.68	3.68	3.68			

Caratteristiche del materiale

(Circolare 7 21-01-19 C8.5.I) Muratura in mattoni pieni e malta di calce LC2_Corti

fb	fk	fvk0	fmedio	τ0	fv0	μ	ϕ	fv,lim	E	G	FC
600000			345000	9000	20000	0.58	0.77	32500	320000000	128000000	1.2

Verifica a pressoflessione nel piano secondo D.M. 17-01-18 NTC §7.8.2.2.1 in combinazioni non sismiche, γM = 3

Comb.	Quota	N	M	σ0	Mu	c.s.	Verifica
SLU 54	1.32	-62236	-12234.82	103142	0	0	No, Rottura per schiacciamento
SLU 54	5	-44477	19238.74	73711	9115.96	0.474	No, M>Mu
SLU 61	1.32	-63737	-12868.24	105629	0	0	No, Rottura per schiacciamento
SLU 61	5	-45460	19588.47	75339	7359.24	0.376	No, M>Mu
SLU 59	1.32	-62540	-11875.29	103646	0	0	No, Rottura per schiacciamento
SLU 59	5	-44838	19681.28	74309	8480.75	0.431	No, M>Mu
SLU 58	1.32	-63245	-10395.44	104815	0	0	No, Rottura per schiacciamento
SLU 58	5	-44596	18454.96	73909	8907.08	0.483	No, M>Mu
SLU 55	1.32	-61172	-13163.32	101379	0	0	No, Rottura per schiacciamento
SLU 55	5	-44156	19892.13	73179	9671.92	0.486	No, M>Mu
SLU 60	1.32	-64442	-11388.39	106798	0	0	No, Rottura per schiacciamento
SLU 60	5	-45218	18362.16	74939	7798.72	0.425	No, M>Mu
SLU 56	1.32	-63839	-10453.51	105799	0	0	No, Rottura per schiacciamento
SLU 56	5	-45079	18619.11	74708	8050.53	0.432	No, M>Mu
SLU 53	1.32	-62941	-10754.97	104311	0	0	No, Rottura per schiacciamento
SLU 53	5	-44236	18012.43	73311	9534.65	0.529	No, M>Mu
SLU 57	1.32	-63134	-11933.36	104631	0	0	No, Rottura per schiacciamento
SLU 57	5	-45320	19845.42	75108	7614	0.384	No, M>Mu
SLU 42	1.32	-60568	-10948.78	100378	0	0	No, Rottura per schiacciamento
SLU 42	5	-44123	20017.63	73125	9727.63	0.486	No, M>Mu

Verifica a pressoflessione nel piano secondo D.M. 17-01-18 NTC §7.8.2.2.1 in combinazioni sismiche, γM = 2

Comb.	Quota	N	M	σ0	Mu	c.s.	Verifica
SLV 13	1.32	-51735	-10086.92	85739	33257.05	3.297	Si
SLV 13	5	-40957	18859.01	67877	39231.03	2.08	Si
SLV 1	1.32	-45171	-22123.58	74861	37703.75	1.704	Si
SLV 1	5	-30384	14778.24	50355	38493.61	2.605	Si
SLV 9	1.32	-51451	-32444.44	85269	33500.91	1.033	Si
SLV 9	5	-42968	25433.34	71210	38631.59	1.519	Si
SLV 5	1.32	-49482	-36055.43	82006	35066.76	0.973	No, M>Mu
SLV 5	5	-39796	24209.11	65954	39469.39	1.63	Si
SLV 12	1.32	-45697	19397.52	75733	37440.24	1.93	Si
SLV 12	5	-26650	2568.78	44166	36671.18	14.276	Si
SLV 6	1.32	-49482	-36055.43	82006	35066.76	0.973	No, M>Mu
SLV 6	5	-39796	24209.11	65954	39469.39	1.63	Si
SLV 14	1.32	-51735	-10086.92	85739	33257.05	3.297	Si
SLV 14	5	-40957	18859.01	67877	39231.03	2.08	Si
SLV 11	1.32	-45697	19397.52	75733	37440.24	1.93	Si
SLV 11	5	-26650	2568.78	44166	36671.18	14.276	Si
SLV 10	1.32	-51451	-32444.44	85269	33500.91	1.033	Si
SLV 10	5	-42968	25433.34	71210	38631.59	1.519	Si
SLV 2	1.32	-45171	-22123.58	74861	37703.75	1.704	Si
SLV 2	5	-30384	14778.24	50355	38493.61	2.605	Si

Verifica a taglio nel piano secondo D.M. 17-01-18 (N.T.C.) §7.8.2.2.2 con rottura per scorrimento in combinazioni non sismiche, γM = 3

Comb.	Quota	N	V par	M	σ0	σN	l'	fvd	Vt scorr.	Vt fess.diag.	Vt,lim	c.s.	Verifica
SLU 26	1.32	-50123	-1981	-10635.23		83068	4.31	10833	6537			3.3	Si
SLU 26	5	-36593	-2144	17099.96		60645	4.31	10833	6537			3.05	Si
SLU 34	1.32	-57105	-1955	-11545.31		94639	4.31	10833	6537			3.34	Si
SLU 34	5	-41977	-2178	19714.61		69568	4.31	10833	6537			3	Si
SLU 76	1.32	-67900	-1857	-13725.19		112530	4.31	10833	6537			3.52	Si
SLU 76	5	-49284	-2187	22422.66		81678	4.31	10833	6537			2.99	Si
SLU 68	1.32	-60918	-1882	-12815.11		100958	4.31	10833	6537			3.47	Si
SLU 68	5	-43901	-2154	19808.02		72756	4.31	10833	6537			3.04	Si
SLU 55	1.32	-61172	-1858	-13163.32		101379	4.31	10833	6537			3.52	Si
SLU 55	5	-44156	-2134	19892.13		73179	4.31	10833	6537			3.06	Si
SLU 31	1.32	-56207	-1908	-11846.77		93151	4.31	10833	6537			3.43	Si
SLU 31	5	-41134	-2126	19107.92		68171	4.31	10833	6537			3.08	Si
SLU 65	1.32	-60020	-1835	-13116.56		99470	4.31	10833	6537			3.56	Si
SLU 65	5	-43058	-2102	19201.34		71359	4.31	10833	6537			3.11	Si
SLU 13	1.32	-50377	-1957	-10983.44		83489	4.31	10833	6537			3.34	Si
SLU 13	5	-36848	-2125	17184.08		61068	4.31	10833	6537			3.08	Si
SLU 47	1.32	-54189	-1884	-12253.23		89807	4.31	10833	6537			3.47	Si
SLU 47	5	-38772	-2101	17277.49		64256	4.31	10833	6537			3.11	Si
SLU 73	1.32	-67002	-1810	-14026.65		111041	4.31	10833	6537			3.61	Si
SLU 73	5	-48442	-2135	21815.98		80281	4.31	10833	6537			3.06	Si

Verifica a taglio nel piano secondo D.M. 17-01-18 (N.T.C.) §7.8.2.2.2 con rottura per scorrimento in combinazioni sismiche, γM = 2

Comb.	Quota	N	V par	M	σ0	σN	l'	fvd	Vt scorr.	Vt fess.diag.	Vt,lim	c.s.	Verifica

Comb.	Quota	N	V par	M	σ0	σN	l'	fvd	Vt scorr.	Vt fess.diag.	Vt,lim	c.s.	Verifica
SLV 14	1.32	-51735	-4078	-10086.92		85739	4.31	16250	9805			2.4	Si
SLV 14	5	-40957	-4950	18859.01		67877	4.31	16250	9805			1.98	Si
SLV 11	1.32	-45697	14621	19397.52		75733	4.31	16250	9805			0.67	No, Vu<V
SLV 11	5	-26650	13041	2568.78		44166	4.31	16250	9805			0.75	No, Vu<V
SLV 5	1.32	-49482	-13944	-36055.43		82599	4.279	16250	9735			0.7	No, Vu<V
SLV 5	5	-39796	-13274	24209.11		65954	4.31	16250	9805			0.74	No, Vu<V
SLV 7	1.32	-43728	14694	15786.52		72469	4.31	16250	9805			0.67	No, Vu<V
SLV 7	5	-23478	13529	1344.55		38909	4.31	16115	9724			0.72	No, Vu<V
SLV 12	1.32	-45697	14621	19397.52		75733	4.31	16250	9805			0.67	No, Vu<V
SLV 12	5	-26650	13041	2568.78		44166	4.31	16250	9805			0.75	No, Vu<V
SLV 9	1.32	-51451	-14016	-32444.44		85269	4.31	16250	9805			0.7	No, Vu<V
SLV 9	5	-42968	-13761	25433.34		71210	4.31	16250	9805			0.71	No, Vu<V
SLV 8	1.32	-43728	14694	15786.52		72469	4.31	16250	9805			0.67	No, Vu<V
SLV 8	5	-23478	13529	1344.55		38909	4.31	16115	9724			0.72	No, Vu<V
SLV 6	1.32	-49482	-13944	-36055.43		82599	4.279	16250	9735			0.7	No, Vu<V
SLV 6	5	-39796	-13274	24209.11		65954	4.31	16250	9805			0.74	No, Vu<V
SLV 10	1.32	-51451	-14016	-32444.44		85269	4.31	16250	9805			0.7	No, Vu<V
SLV 10	5	-42968	-13761	25433.34		71210	4.31	16250	9805			0.71	No, Vu<V
SLV 13	1.32	-51735	-4078	-10086.92		85739	4.31	16250	9805			2.4	Si
SLV 13	5	-40957	-4950	18859.01		67877	4.31	16250	9805			1.98	Si

Verifica a pressoflessione fuori piano D.M. 17-01-18 (N.T.C.)

quota 3.16 Wa 0.03 denominatore 8 γM = 2

Comb.	fd	Sa	σ0	N	M	Mc	Coeff.s.	Verifica
SLV 14	143750	0.31	75099	-45314	208.16	1222.44	5.87	Si
SLV 13	143750	0.31	75099	-45314	208.16	1222.44	5.87	Si
SLV 9	143750	0.31	74603	-45016	208.16	1227.15	5.9	Si
SLV 10	143750	0.31	74603	-45016	208.16	1227.15	5.9	Si
SLV 15	143750	0.31	70834	-42741	208.16	1257.44	6.04	Si
SLV 16	143750	0.31	70834	-42741	208.16	1257.44	6.04	Si
SLV 6	143750	0.31	69914	-42186	208.16	1263.34	6.07	Si
SLV 5	143750	0.31	69914	-42186	208.16	1263.34	6.07	Si
SLV 4	143750	0.31	55203	-33309	208.16	1278.24	6.14	Si
SLV 3	143750	0.31	55203	-33309	208.16	1278.24	6.14	Si

Verifica dei meccanismi locali di collasso con analisi cinematica lineare

forza di aggancio al piano = 0 quota mezzeria = 3.16 Wa = 0.03 Ta = 0.1615

Comb.	N top	N base	V orto	α0	M*	e*	a0*	aLim	Verifica
SLV 4	-25489	-43445	-133	0.016	2907.7	0.967	0.23367	14.13539	No
SLV 3	-25489	-43445	-133	0.016	2907.7	0.967	0.23367	14.13539	No
SLV 14	-40957	-51735	132	0.017	4483	0.978	0.25015	14.13539	No
SLV 13	-40957	-51735	132	0.017	4483	0.978	0.25015	14.13539	No
SLV 1	-30384	-45171	-110	0.017	3406.1	0.972	0.25118	14.13539	No
SLV 2	-30384	-45171	-110	0.017	3406.1	0.972	0.25118	14.13539	No
SLV 16	-36062	-50008	109	0.017	3984.3	0.976	0.25574	14.13539	No
SLV 15	-36062	-50008	109	0.017	3984.3	0.976	0.25574	14.13539	No
SLV 7	-23478	-43728	-76	0.018	2703	0.965	0.26408	14.13539	No
SLV 8	-23478	-43728	-76	0.018	2703	0.965	0.26408	14.13539	No

Tabella dei coefficienti di sicurezza minimi

Stato limite	Coeff.s.	Comb.	Verifica
PF_SLU	0	SLU 10	No
V_SLU	2.989	SLU 76	Si
PF_SLV	0.973	SLV 5	No
V_SLV	0.667	SLV 7	No
PFFP_SLV	5.873	SLV 13	Si
R_SLV	0.017	SLV 3	No

Maschio 95

Verifiche condotte secondo D.M. 17-01-18 (N.T.C.)

Dati geometrici

X ini.	Y ini.	X fin.	Y fin.	Quota i.	Quota.s	l	Sp.	h netta	h ini.	h fin.	a	a.s.,sx	a.s.,dx
-7.467	-3.169	-8.548	-3.169	L3	L4	1.08	0.28	3.68	3.68	3.68			

Caratteristiche del materiale

(Circolare 7 21-01-19 C8.5.I) Muratura in mattoni pieni e malta di calce LC2_Corti

fb	fk	fvk0	fmedio	τ0	fv0	μ	ϕ	fv,lim	E	G	FC
600000			345000	9000	20000	0.58	0.77	32500	320000000	128000000	1.2

Verifica a pressoflessione nel piano secondo D.M. 17-01-18 NTC §7.8.2.2.1 in combinazioni non sismiche, γM = 3

Comb.	Quota	N	M	σ0	Mu	c.s.	Verifica
SLU 75	2.22	-12564	-3129.49	41535	3326.26	1.063	Si
SLU 75	4.12	-9931	-420.54	32831	3202.44	7.615	Si
SLU 84	2.22	-13001	-3274.82	42981	3317.4	1.013	Si
SLU 84	4.12	-10311	-412.57	34087	3239.08	7.851	Si
SLU 80	2.22	-12647	-3169.59	41810	3325.22	1.049	Si
SLU 80	4.12	-9875	-385.49	32645	3196.48	8.292	Si
SLU 74	2.22	-12681	-3233.7	41920	3324.72	1.028	Si
SLU 74	4.12	-10333	-453.56	34159	3240.99	7.146	Si
SLU 83	2.22	-13118	-3379.02	43366	3313.62	0.981	No, M>Mu
SLU 83	4.12	-10713	-445.6	35416	3270.93	7.341	Si
SLU 77	2.22	-12845	-3285.23	42465	3321.53	1.011	Si
SLU 77	4.12	-10386	-433.71	34333	3245.51	7.483	Si
SLU 78	2.22	-12729	-3181.02	42079	3323.91	1.045	Si

Comb.	Quota	N	M	σ0	Mu	c.s.	Verifica
SLU 78	4.12	-9984	-400.69	33005	3207.88	8.006	Si
SLU 81	2.22	-12953	-3327.49	42821	3318.79	0.997	No, M>Mu
SLU 81	4.12	-10660	-465.44	35242	3267.17	7.02	Si
SLU 82	2.22	-12837	-3223.28	42436	3321.72	1.031	Si
SLU 82	4.12	-10259	-432.42	33913	3234.38	7.48	Si
SLU 79	2.22	-12764	-3273.79	42195	3323.26	1.015	Si
SLU 79	4.12	-10277	-418.51	33974	3236.02	7.732	Si

Verifica a pressoflessione nel piano secondo D.M. 17-01-18 NTC §7.8.2.2.1 in combinazioni sismiche, γM = 2

Comb.	Quota	N	M	σ0	Mu	c.s.	Verifica
SLV 12	2.22	-5523	-3492.34	0	0	0	No, e>l/2
SLV 12	4.12	762	1588.91	0	0	0	No, Trazione
SLV 7	2.22	-1723	-1682.75	0	0	0	No, e>l/2
SLV 7	4.12	500	446.51	0	0	0	No, Trazione
SLV 15	2.22	-13542	-5329.29	44768	4634.94	0.87	No, M>Mu
SLV 15	4.12	-4309	1973.26	14246	2056.44	1.042	Si
SLV 4	2.22	-877	702.7	0	0	0	No, e>l/2
SLV 4	4.12	-5185	-1834.75	17140	2407.84	1.312	Si
SLV 3	2.22	-877	702.7	0	0	0	No, e>l/2
SLV 3	4.12	-5185	-1834.75	17140	2407.84	1.312	Si
SLV 11	2.22	-5523	-3492.34	0	0	0	No, e>l/2
SLV 11	4.12	762	1588.91	0	0	0	No, Trazione
SLV 8	2.22	-1723	-1682.75	0	0	0	No, e>l/2
SLV 8	4.12	500	446.51	0	0	0	No, Trazione
SLV 16	2.22	-13542	-5329.29	44768	4634.94	0.87	No, M>Mu
SLV 16	4.12	-4309	1973.26	14246	2056.44	1.042	Si
SLV 14	2.22	-16616	-5094.21	54930	4940.55	0.97	No, M>Mu
SLV 14	4.12	-8919	1160.3	29486	3655.35	3.15	Si
SLV 13	2.22	-16616	-5094.21	54930	4940.55	0.97	No, M>Mu
SLV 13	4.12	-8919	1160.3	29486	3655.35	3.15	Si

Verifica a taglio nel piano secondo D.M. 17-01-18 (N.T.C.) §7.8.2.2.2 con rottura per scorrimento in combinazioni non sismiche, γM = 3

Comb.	Quota	N	V par	M	σ0	σN	l'	fvd	Vt scorr.	Vt fess.diag.	Vt,lim	c.s.	Verifica
SLU 80	2.22	-12647	-2320	-3169.59		51998	0.8687	10833	2635			1.14	Si
SLU 80	4.12	-9875	-1895	-385.49		32645	1.0803	9908	2997			1.58	Si
SLU 56	2.22	-11783	-2330	-2983.07		48875	0.861	10833	2612			1.12	Si
SLU 56	4.12	-9381	-1658	-401.53		31011	1.0803	9690	2931			1.77	Si
SLU 79	2.22	-12764	-2534	-3273.79		53564	0.851	10833	2582			1.02	Si
SLU 79	4.12	-10277	-1895	-418.51		33974	1.0803	10085	3051			1.61	Si
SLU 77	2.22	-12845	-2528	-3285.23		53766	0.8533	10833	2588			1.02	Si
SLU 77	4.12	-10386	-1898	-433.71		34333	1.0803	10133	3065			1.62	Si
SLU 83	2.22	-13118	-2566	-3379.02		55264	0.8477	10833	2572			1	Si
SLU 83	4.12	-10713	-1994	-445.6		35416	1.0803	10278	3109			1.56	Si
SLU 74	2.22	-12681	-2443	-3233.7		52939	0.8555	10833	2595			1.06	Si
SLU 74	4.12	-10333	-1875	-453.56		34159	1.0803	10110	3058			1.63	Si
SLU 62	2.22	-12056	-2367	-3076.87		50367	0.8549	10833	2593			1.1	Si
SLU 62	4.12	-9708	-1753	-413.42		32094	1.0803	9835	2975			1.7	Si
SLU 84	2.22	-13001	-2351	-3274.82		53689	0.8649	10833	2623			1.12	Si
SLU 84	4.12	-10311	-1994	-412.57		34087	1.0803	10101	3055			1.53	Si
SLU 58	2.22	-11702	-2336	-2971.64		48671	0.8587	10833	2605			1.12	Si
SLU 58	4.12	-9272	-1654	-386.33		30652	1.0803	9642	2917			1.76	Si
SLU 81	2.22	-12953	-2480	-3327.49		54434	0.8499	10833	2578			1.04	Si
SLU 81	4.12	-10660	-1971	-465.44		35242	1.0803	10254	3102			1.57	Si

Verifica a taglio nel piano secondo D.M. 17-01-18 (N.T.C.) §7.8.2.2.2 con rottura per scorrimento in combinazioni sismiche, γM = 2

Comb.	Quota	N	V par	M	σ0	σN	l'	fvd	Vt scorr.	Vt fess.diag.	Vt,lim	c.s.	Verifica
SLV 3	2.22	-877	4151	702.7		0	0	8333	0			0	No, Vu<V
SLV 3	4.12	-5185	18	-1834.75		33131	0.5589	14960	2341			132.55	Si
SLV 14	2.22	-16616	-7435	-5094.21		84683	0.7008	16250	3189			0.43	No, Vu<V
SLV 14	4.12	-8919	-2481	1160.3		29486	1.0803	14231	4305			1.74	Si
SLV 7	2.22	-1723	-718	-1682.75		0	0	8333	0			0	No, Vu<V
SLV 7	4.12	500	-3017	446.51		0	0	8333	0			0	No, Vu<V
SLV 11	2.22	-5523	-4355	-3492.34		0	0	8333	0			0	No, Vu<V
SLV 11	4.12	762	-4194	1588.91		0	0	8333	0			0	No, Vu<V
SLV 16	2.22	-13542	-7972	-5329.29		109940	0.4399	16250	2002			0.25	No, Vu<V
SLV 16	4.12	-4309	-3905	1973.26		62351	0.2468	16250	1123			0.29	No, Vu<V
SLV 13	2.22	-16616	-7435	-5094.21		84683	0.7008	16250	3189			0.43	No, Vu<V
SLV 13	4.12	-8919	-2481	1160.3		29486	1.0803	14231	4305			1.74	Si
SLV 12	2.22	-5523	-4355	-3492.34		0	0	8333	0			0	No, Vu<V
SLV 12	4.12	762	-4194	1588.91		0	0	8333	0			0	No, Vu<V
SLV 4	2.22	-877	4151	702.7		0	0	8333	0			0	No, Vu<V
SLV 4	4.12	-5185	18	-1834.75		33131	0.5589	14960	2341			132.55	Si
SLV 15	2.22	-13542	-7972	-5329.29		109940	0.4399	16250	2002			0.25	No, Vu<V
SLV 15	4.12	-4309	-3905	1973.26		62351	0.2468	16250	1123			0.29	No, Vu<V
SLV 8	2.22	-1723	-718	-1682.75		0	0	8333	0			0	No, Vu<V
SLV 8	4.12	500	-3017	446.51		0	0	8333	0			0	No, Vu<V

Verifica a pressoflessione fuori piano D.M. 17-01-18 (N.T.C.)

quota 3.16 Wa 0.05 denominatore 8 γM = 2

Comb.	fd	Sa	σ0	N	M	Mc	Coeff.s.	Verifica
SLV 7	143750	0.31	0	315	97.55	0	0	No, Trazione
SLV 8	143750	0.31	0	315	97.55	0	0	No, Trazione
SLV 3	143750	0.31	0	-66	97.55	0	0	No, e>t/2
SLV 4	143750	0.31	0	-66	97.55	0	0	No, e>t/2
SLV 12	143750	0.31	11886	-3595	97.55	454.39	4.66	Si
SLV 11	143750	0.31	11886	-3595	97.55	454.39	4.66	Si
SLV 1	143750	0.31	14225	-4303	97.55	532.28	5.46	Si
SLV 2	143750	0.31	14225	-4303	97.55	532.28	5.46	Si
SLV 16	143750	0.31	43306	-13100	97.55	1183.98	12.14	Si

Comb.	fd	Sa	σ0	N	M	Mc	Coeff.s.	Verifica
SLV 15	143750	0.31	43306	-13100	97.55	1183.98	12.14	Si

Verifica dei meccanismi locali di collasso con analisi cinematica lineare

forza di aggancio al piano = 0 quota mezzeria = 3.16 Wa = 0.05 Ta = 0.0808

Comb.	N top	N base	V orto	α0	M*	e*	a0*	aLim	Verifica
SLV 2	-8127	-6215	-13	0.041	984.6	0.953	0.62133	8.50261	No
SLV 1	-8127	-6215	-13	0.041	984.6	0.953	0.62133	8.50261	No
SLV 3	-6443	-3390	-20	0.041	813.6	0.945	0.62332	8.50261	No
SLV 4	-6443	-3390	-20	0.041	813.6	0.945	0.62332	8.50261	No
SLV 13	-5573	-8453	10	0.042	725.5	0.939	0.65365	8.50261	No
SLV 14	-5573	-8453	10	0.042	725.5	0.939	0.65365	8.50261	No
SLV 16	-3889	-5628	4	0.045	555.4	0.925	0.70703	8.50261	No
SLV 15	-3889	-5628	4	0.045	555.4	0.925	0.70703	8.50261	No
SLV 10	-8432	-10966	10	0.041	1015.6	0.955	0.6253	7.42296	No
SLV 9	-8432	-10966	10	0.041	1015.6	0.955	0.6253	7.42296	No

Tabella dei coefficienti di sicurezza minimi

Stato limite	Coeff.s.	Comb.	Verifica
PF_SLU	0.981	SLU 83	No
V_SLU	1.002	SLU 83	Si
PF_SLV	0	SLV 12	No
V_SLV	0	SLV 3	No
PFFP_SLV	0	SLV 8	No
R_SLV	0.073	SLV 1	No

Maschio 96

Verifiche condotte secondo D.M. 17-01-18 (N.T.C.)

Dati geometrici

X ini.	Y ini.	X fin.	Y fin.	Quota i.	Quota.s	l	Sp.	h netta	h ini.	h fin.	a	a.s.,sx	a.s.,dx
-5.158	1.141	-5.158	5.808	L3	L4	4.667	0.14	3.68	3.68	3.68			

Caratteristiche del materiale

(Circolare 7 21-01-19 C8.5.I) Muratura in mattoni pieni e malta di calce LC2_Corti

fb	fk	fvk0	fmedio	τ0	fv0	μ	ϕ	fv,lim	E	G	FC
600000			345000	9000	20000	0.58	0.77	32500	320000000	128000000	1.2

Verifica a pressoflessione nel piano secondo D.M. 17-01-18 NTC §7.8.2.2.1 in combinazioni non sismiche, γM = 3

Comb.	Quota	N	M	σ0	Mu	c.s.	Verifica
SLU 57	1.32	-54546	18571.74	83477	0	0	No, Rottura per schiacciamento
SLU 57	5	-34856	3287.76	53343	28074.82	8.539	Si
SLU 63	1.32	-55738	19052.12	85302	0	0	No, Rottura per schiacciamento
SLU 63	5	-35331	3492.42	54070	27721.78	7.938	Si
SLU 66	1.32	-53740	18386.56	82243	0	0	No, Rottura per schiacciamento
SLU 66	5	-34164	3315.19	52284	28553.97	8.613	Si
SLU 56	1.32	-54701	18516.79	83715	0	0	No, Rottura per schiacciamento
SLU 56	5	-34943	3237.27	53477	28011.19	8.653	Si
SLU 60	1.32	-55024	18912.94	84209	0	0	No, Rottura per schiacciamento
SLU 60	5	-34629	3573.48	52996	28236.52	7.902	Si
SLU 58	1.32	-54166	18324.4	82896	0	0	No, Rottura per schiacciamento
SLU 58	5	-34533	3209.08	52849	28303.43	8.82	Si
SLU 59	1.32	-54011	18379.35	82658	0	0	No, Rottura per schiacciamento
SLU 59	5	-34446	3259.57	52715	28363.91	8.702	Si
SLU 84	1.32	-61704	20772.44	94432	0	0	No, Rottura per schiacciamento
SLU 84	5	-39247	3675.13	60063	24055.98	6.546	Si
SLU 61	1.32	-54869	18967.89	83972	0	0	No, Rottura per schiacciamento
SLU 61	5	-34541	3623.98	52862	28297.74	7.808	Si
SLU 62	1.32	-55894	18997.17	85539	0	0	No, Rottura per schiacciamento
SLU 62	5	-35418	3441.92	54204	27654.51	8.035	Si

Verifica a pressoflessione nel piano secondo D.M. 17-01-18 NTC §7.8.2.2.1 in combinazioni sismiche, γM = 2

Comb.	Quota	N	M	σ0	Mu	c.s.	Verifica
SLV 4	1.32	-40144	21111.64	61437	46578.55	2.206	Si
SLV 4	5	-21904	2818.3	33522	37092.63	13.161	Si
SLV 1	1.32	-37210	19283.6	56945	46365.27	2.404	Si
SLV 1	5	-19033	3938.49	29127	33827.62	8.589	Si
SLV 2	1.32	-37210	19283.6	56945	46365.27	2.404	Si
SLV 2	5	-19033	3938.49	29127	33827.62	8.589	Si
SLV 12	1.32	-46169	15261.94	70657	45438.56	2.977	Si
SLV 12	5	-31941	573.65	48883	44719.28	77.955	Si
SLV 7	1.32	-44969	18946.13	68820	45835.01	2.419	Si
SLV 7	5	-28855	1006.47	44159	43001.12	42.725	Si
SLV 3	1.32	-40144	21111.64	61437	46578.55	2.206	Si
SLV 3	5	-21904	2818.3	33522	37092.63	13.161	Si
SLV 8	1.32	-44969	18946.13	68820	45835.01	2.419	Si
SLV 8	5	-28855	1006.47	44159	43001.12	42.725	Si

Comb.	Quota	N	M	σ0	Mu	c.s.	Verifica
SLV 5	1.32	-35186	12852.67	53849	45925.03	3.573	Si
SLV 5	5	-19284	4740.41	29512	34132.56	7.2	Si
SLV 6	1.32	-35186	12852.67	53849	45925.03	3.573	Si
SLV 6	5	-19284	4740.41	29512	34132.56	7.2	Si
SLV 11	1.32	-46169	15261.94	70657	45438.56	2.977	Si
SLV 11	5	-31941	573.65	48883	44719.28	77.955	Si

Verifica a taglio nel piano secondo D.M. 17-01-18 (N.T.C.) §7.8.2.2.2 con rottura per scorrimento in combinazioni non sismiche, γM = 3

Comb.	Quota	N	V par	M	σ0	σN	l'	fvd	Vt scorr.	Vt fess.diag.	Vt,lim	c.s.	Verifica
SLU 83	1.32	-61859	2538	20717.5		94670	4.6673	10833	7079			2.79	Si
SLU 83	5	-39334	2198	3624.64		60197	4.6673	10833	7079			3.22	Si
SLU 80	1.32	-59977	2503	20099.68		91788	4.6673	10833	7079			2.83	Si
SLU 80	5	-38362	2176	3442.28		58709	4.6673	10833	7079			3.25	Si
SLU 75	1.32	-59643	2445	20207.83		91278	4.6673	10833	7079			2.9	Si
SLU 75	5	-37983	2117	3602.03		58129	4.6673	10833	7079			3.34	Si
SLU 79	1.32	-60132	2479	20044.73		92026	4.6673	10833	7079			2.86	Si
SLU 79	5	-38449	2152	3391.79		58843	4.6673	10833	7079			3.29	Si
SLU 76	1.32	-59004	2443	20052.08		90300	4.6673	10833	7079			2.9	Si
SLU 76	5	-37514	2118	3607.5		57411	4.6673	10833	7079			3.34	Si
SLU 82	1.32	-60835	2486	20688.22		93102	4.6673	10833	7079			2.85	Si
SLU 82	5	-38457	2148	3806.69		58855	4.6673	10833	7079			3.3	Si
SLU 84	1.32	-61704	2561	20772.44		94432	4.6673	10833	7079			2.76	Si
SLU 84	5	-39247	2222	3675.13		60063	4.6673	10833	7079			3.19	Si
SLU 78	1.32	-60512	2520	20292.06		92608	4.6673	10833	7079			2.81	Si
SLU 78	5	-38772	2191	3470.47		59336	4.6673	10833	7079			3.23	Si
SLU 81	1.32	-60990	2462	20633.27		93340	4.6673	10833	7079			2.87	Si
SLU 81	5	-38545	2124	3756.19		58989	4.6673	10833	7079			3.33	Si
SLU 77	1.32	-60667	2497	20237.12		92845	4.6673	10833	7079			2.84	Si
SLU 77	5	-38859	2167	3419.98		59470	4.6673	10833	7079			3.27	Si

Verifica a taglio nel piano secondo D.M. 17-01-18 (N.T.C.) §7.8.2.2.2 con rottura per scorrimento in combinazioni sismiche, γM = 2

Comb.	Quota	N	V par	M	σ0	σN	l'	fvd	Vt scorr.	Vt fess.diag.	Vt,lim	c.s.	Verifica
SLV 11	1.32	-46169	13472	15261.94		70657	4.6673	16250	10618			0.79	No, Vu<V
SLV 11	5	-31941	15306	573.65		48883	4.6673	16250	10618			0.69	No, Vu<V
SLV 9	1.32	-36387	-7875	9168.48		55686	4.6673	16250	10618			1.35	Si
SLV 9	5	-22370	-9609	4307.59		34236	4.6673	15180	9919			1.03	Si
SLV 8	1.32	-44969	11027	18946.13		68820	4.6673	16250	10618			0.96	No, Vu<V
SLV 8	5	-28855	12308	1006.47		44159	4.6673	16250	10618			0.86	No, Vu<V
SLV 10	1.32	-36387	-7875	9168.48		55686	4.6673	16250	10618			1.35	Si
SLV 10	5	-22370	-9609	4307.59		34236	4.6673	15180	9919			1.03	Si
SLV 16	1.32	-44146	8852	8831		67561	4.6673	16250	10618			1.2	Si
SLV 16	5	-32193	10083	1375.58		49268	4.6673	16250	10618			1.05	Si
SLV 5	1.32	-35186	-10320	12852.67		53849	4.6673	16250	10618			1.03	Si
SLV 5	5	-19284	-12606	4740.41		29512	4.6673	14236	9302			0.74	No, Vu<V
SLV 15	1.32	-44146	8852	8831		67561	4.6673	16250	10618			1.2	Si
SLV 15	5	-32193	10083	1375.58		49268	4.6673	16250	10618			1.05	Si
SLV 12	1.32	-46169	13472	15261.94		70657	4.6673	16250	10618			0.79	No, Vu<V
SLV 12	5	-31941	15306	573.65		48883	4.6673	16250	10618			0.69	No, Vu<V
SLV 7	1.32	-44969	11027	18946.13		68820	4.6673	16250	10618			0.96	No, Vu<V
SLV 7	5	-28855	12308	1006.47		44159	4.6673	16250	10618			0.86	No, Vu<V
SLV 6	1.32	-35186	-10320	12852.67		53849	4.6673	16250	10618			1.03	Si
SLV 6	5	-19284	-12606	4740.41		29512	4.6673	14236	9302			0.74	No, Vu<V

Verifica a pressoflessione fuori piano D.M. 17-01-18 (N.T.C.)

quota 3.16 Wa 0.03 denominatore 8 γM = 2

Comb.	fd	Sa	σ0	N	M	Mc	Coeff.s.	Verifica
SLV 5	143750	0.31	41954	-27414	225.42	1260.07	5.59	Si
SLV 6	143750	0.31	41954	-27414	225.42	1260.07	5.59	Si
SLV 2	143750	0.31	44572	-29124	225.42	1295.02	5.74	Si
SLV 1	143750	0.31	44572	-29124	225.42	1295.02	5.74	Si
SLV 9	143750	0.31	45701	-29862	225.42	1308.51	5.8	Si
SLV 10	143750	0.31	45701	-29862	225.42	1308.51	5.8	Si
SLV 3	143750	0.31	50563	-33039	225.42	1355.69	6.01	Si
SLV 4	143750	0.31	50563	-33039	225.42	1355.69	6.01	Si
SLV 12	143750	0.31	65673	-42912	225.42	1389.36	6.16	Si
SLV 11	143750	0.31	65673	-42912	225.42	1389.36	6.16	Si

Verifica dei meccanismi locali di collasso con analisi cinematica lineare

forza di aggancio al piano = 0 quota mezzeria = 3.16 Wa = 0.03 Ta = 0.1615

Comb.	N top	N base	V orto	α0	M*	e*	a0*	aLim	Verifica
SLV 12	-31941	-46169	-38	0.019	3590.5	0.971	0.28611	14.13539	No
SLV 11	-31941	-46169	-38	0.019	3590.5	0.971	0.28611	14.13539	No
SLV 8	-28855	-44969	-30	0.019	3276.3	0.969	0.29106	14.13539	No
SLV 7	-28855	-44969	-30	0.019	3276.3	0.969	0.29106	14.13539	No
SLV 15	-32193	-44146	-25	0.019	3616.1	0.971	0.29156	14.13539	No
SLV 16	-32193	-44146	-25	0.019	3616.1	0.971	0.29156	14.13539	No
SLV 5	-19284	-35186	34	0.019	2302.5	0.957	0.29372	14.13539	No
SLV 6	-19284	-35186	34	0.019	2302.5	0.957	0.29372	14.13539	No
SLV 10	-22370	-36387	26	0.02	2616.4	0.961	0.29683	14.13539	No
SLV 9	-22370	-36387	26	0.02	2616.4	0.961	0.29683	14.13539	No

Tabella dei coefficienti di sicurezza minimi

Stato limite	Coeff.s.	Comb.	Verifica
PF_SLU	0	SLU 53	No
V_SLU	2.764	SLU 84	Si
PF_SLV	2.206	SLV 3	Si
V_SLV	0.694	SLV 11	No
PFFP_SLV	5.59	SLV 5	Si
R_SLV	0.02	SLV 11	No

Maschio 97

Verifiche condotte secondo D.M. 17-01-18 (N.T.C.)

Dati geometrici

X ini.	Y ini.	X fin.	Y fin.	Quota i.	Quota.s	l	Sp.	h netta	h ini.	h fin.	a	a.s.,sx	a.s.,dx
-5.088	5.808	-5.088	5.94	L3	L4	0.132	0.28	3.68	3.68	3.68			

Caratteristiche del materiale

(Circolare 7 21-01-19 C8.5.I) Muratura in mattoni pieni e malta di calce LC2_Corti

fb	fk	fvk0	fmedio	τ0	fv0	μ	ϕ	fv,lim	E	G	FC
600000			345000	9000	20000	0.58	0.77	32500	320000000	128000000	1.2

Verifica a pressoflessione nel piano secondo D.M. 17-01-18 NTC §7.8.2.2.1 in combinazioni non sismiche, γM = 3

Comb.	Quota	N	M	σ0	Mu	c.s.	Verifica
SLU 53	3.32	-2506	-125.95	67988	27.27	0.217	No, M>Mu
SLU 53	4.12	-3932	185.95	106678	0	0	No, Rottura per schiacciamento
SLU 56	3.32	-2533	-129.16	68717	26.07	0.202	No, M>Mu
SLU 56	4.12	-4000	190.07	108531	0	0	No, Rottura per schiacciamento
SLU 61	3.32	-2554	-129.45	69290	25.11	0.194	No, M>Mu
SLU 61	4.12	-4016	190.54	108974	0	0	No, Rottura per schiacciamento
SLU 57	3.32	-2534	-128.91	68748	26.02	0.202	No, M>Mu
SLU 57	4.12	-3997	189.62	108461	0	0	No, Rottura per schiacciamento
SLU 42	3.32	-2378	-130.19	64521	32.54	0.25	No, M>Mu
SLU 42	4.12	-3871	188.44	105025	0	0	No, Rottura per schiacciamento
SLU 59	3.32	-2505	-127.84	67954	27.33	0.214	No, M>Mu
SLU 59	4.12	-3955	187.88	107311	0	0	No, Rottura per schiacciamento
SLU 60	3.32	-2553	-129.7	69259	25.16	0.194	No, M>Mu
SLU 60	4.12	-4019	190.98	109045	0	0	No, Rottura per schiacciamento
SLU 58	3.32	-2503	-128.1	67924	27.38	0.214	No, M>Mu
SLU 58	4.12	-3958	188.32	107382	0	0	No, Rottura per schiacciamento
SLU 55	3.32	-2478	-124.47	67246	28.46	0.229	No, M>Mu
SLU 55	4.12	-3885	183.46	105411	0	0	No, Rottura per schiacciamento
SLU 54	3.32	-2507	-125.7	68019	27.22	0.217	No, M>Mu
SLU 54	4.12	-3929	185.5	106608	0	0	No, Rottura per schiacciamento

Verifica a pressoflessione nel piano secondo D.M. 17-01-18 NTC §7.8.2.2.1 in combinazioni sismiche, γM = 2

Comb.	Quota	N	M	σ0	Mu	c.s.	Verifica
SLV 4	3.32	-2970	190.23	80573	66.57	0.35	No, M>Mu
SLV 4	4.12	-943	-141.91	0	0	0	No, e>l/2
SLV 5	3.32	-297	-326.11	0	0	0	No, e>l/2
SLV 5	4.12	-3343	316.65	0	0	0	No, e>l/2
SLV 6	3.32	-297	-326.11	0	0	0	No, e>l/2
SLV 6	4.12	-3343	316.65	0	0	0	No, e>l/2
SLV 14	3.32	-834	-377.85	0	0	0	No, e>l/2
SLV 14	4.12	-4978	420.01	0	0	0	No, e>l/2
SLV 3	3.32	-2970	190.23	80573	66.57	0.35	No, M>Mu
SLV 3	4.12	-943	-141.91	0	0	0	No, e>l/2
SLV 7	3.32	-3829	256.48	0	0	0	No, e>l/2
SLV 7	4.12	-1530	-163.87	0	0	0	No, e>l/2
SLV 8	3.32	-3829	256.48	0	0	0	No, e>l/2
SLV 8	4.12	-1530	-163.87	0	0	0	No, e>l/2
SLV 9	3.32	26	-444.1	0	0	0	No, Trazione
SLV 9	4.12	-4390	441.98	0	0	0	No, e>l/2
SLV 13	3.32	-834	-377.85	0	0	0	No, e>l/2
SLV 13	4.12	-4978	420.01	0	0	0	No, e>l/2
SLV 10	3.32	26	-444.1	0	0	0	No, Trazione
SLV 10	4.12	-4390	441.98	0	0	0	No, e>l/2

Verifica a taglio nel piano secondo D.M. 17-01-18 (N.T.C.) §7.8.2.2.2 con rottura per scorrimento in combinazioni non sismiche, γM = 3

Comb.	Quota	N	V par	M	σ0	σN	l'	fvd	Vt scorr.	Vt fess.diag.	Vt,lim	c.s.	Verifica
SLU 77	3.32	-2776	-581	-146.01		250078	0.0396	10833	120			0.21	No, Vu<V
SLU 77	4.12	-4444	-791	213.39		297228	0.0534	10833	162			0.2	No, Vu<V
SLU 42	3.32	-2378	-518	-130.19		255816	0.0332	10833	101			0.19	No, Vu<V
SLU 42	4.12	-3871	-699	188.44		268965	0.0514	10833	156			0.22	No, Vu<V
SLU 41	3.32	-2377	-518	-130.45		258770	0.0328	10833	100			0.19	No, Vu<V
SLU 41	4.12	-3873	-701	188.89		270439	0.0512	10833	155			0.22	No, Vu<V
SLU 79	3.32	-2747	-576	-144.95		250724	0.0391	10833	119			0.21	No, Vu<V
SLU 79	4.12	-4402	-785	211.65		295483	0.0532	10833	161			0.21	No, Vu<V
SLU 84	3.32	-2824	-595	-149.51		261229	0.0386	10833	117			0.2	No, Vu<V
SLU 84	4.12	-4529	-808	217.98		304874	0.0531	10833	161			0.2	No, Vu<V
SLU 83	3.32	-2823	-596	-149.76		263377	0.0383	10833	116			0.19	No, Vu<V
SLU 83	4.12	-4532	-810	218.43		306268	0.0528	10833	160			0.2	No, Vu<V
SLU 82	3.32	-2797	-583	-146.3		246515	0.0405	10833	123			0.21	No, Vu<V
SLU 82	4.12	-4461	-793	213.86		297147	0.0536	10833	163			0.21	No, Vu<V
SLU 81	3.32	-2796	-584	-146.55		248454	0.0402	10833	122			0.21	No, Vu<V
SLU 81	4.12	-4463	-795	214.31		298515	0.0534	10833	162			0.2	No, Vu<V

Comb.	Quota	N	V par	M	σ0	σN	l'	fvd	Vt scorr.	Vt fess.diag.	Vt,lim	c.s.	Verifica
SLU 78	3.32	-2777	-580	-145.76		248083	0.04	10833	121			0.21	No, Vu<V
SLU 78	4.12	-4442	-789	212.95		295860	0.0536	10833	163			0.21	No, Vu<V
SLU 37	3.32	-2301	-499	-125.63		244298	0.0336	10833	102			0.2	No, Vu<V
SLU 37	4.12	-3744	-676	182.11		259527	0.0515	10833	156			0.23	No, Vu<V

Verifica a taglio nel piano secondo D.M. 17-01-18 (N.T.C.) §7.8.2.2.2 con rottura per scorrimento in combinazioni sismiche, γM = 2

Comb.	Quota	N	V par	M	σ0	σN	l'	fvd	Vt scorr.	Vt fess.diag.	Vt,lim	c.s.	Verifica
SLV 3	3.32	-2970	641	190.23		2012735	0.0053	16250	24			0.04	No, Vu<V
SLV 3	4.12	-943	459	-141.91		0	0	8333	0			0	No, Vu<V
SLV 13	3.32	-834	-1390	-377.85		0	0	8333	0			0	No, Vu<V
SLV 13	4.12	-4978	-1489	420.01		0	0	8333	0			0	No, Vu<V
SLV 10	3.32	26	-1634	-444.1		0	0	8333	0			0	No, Vu<V
SLV 10	4.12	-4390	-1563	441.98		0	0	8333	0			0	No, Vu<V
SLV 5	3.32	-297	-1214	-326.11		0	0	8333	0			0	No, Vu<V
SLV 5	4.12	-3343	-1128	316.65		0	0	8333	0			0	No, Vu<V
SLV 9	3.32	26	-1634	-444.1		0	0	8333	0			0	No, Vu<V
SLV 9	4.12	-4390	-1563	441.98		0	0	8333	0			0	No, Vu<V
SLV 7	3.32	-3829	886	256.48		0	0	8333	0			0	No, Vu<V
SLV 7	4.12	-1530	533	-163.87		0	0	8333	0			0	No, Vu<V
SLV 6	3.32	-297	-1214	-326.11		0	0	8333	0			0	No, Vu<V
SLV 6	4.12	-3343	-1128	316.65		0	0	8333	0			0	No, Vu<V
SLV 8	3.32	-3829	886	256.48		0	0	8333	0			0	No, Vu<V
SLV 8	4.12	-1530	533	-163.87		0	0	8333	0			0	No, Vu<V
SLV 14	3.32	-834	-1390	-377.85		0	0	8333	0			0	No, Vu<V
SLV 14	4.12	-4978	-1489	420.01		0	0	8333	0			0	No, Vu<V
SLV 4	3.32	-2970	641	190.23		2012735	0.0053	16250	24			0.04	No, Vu<V
SLV 4	4.12	-943	459	-141.91		0	0	8333	0			0	No, Vu<V

Verifica a pressoflessione fuori piano D.M. 17-01-18 (N.T.C.)

quota 3.16 Wa 0.05 denominatore 8 γM = 2

Comb.	fd	Sa	σ0	N	M	Mc	Coeff.s.	Verifica
SLV 9	143750	0.31	0	18	12.16	0	0	No, Trazione
SLV 10	143750	0.31	0	18	12.16	0	0	No, Trazione
SLV 5	143750	0.31	6631	-244	12.16	32.36	2.66	Si
SLV 6	143750	0.31	6631	-244	12.16	32.36	2.66	Si
SLV 14	143750	0.31	7679	-283	12.16	37.13	3.05	Si
SLV 13	143750	0.31	7679	-283	12.16	37.13	3.05	Si
SLV 15	143750	0.31	21802	-804	12.16	92.42	7.6	Si
SLV 16	143750	0.31	21802	-804	12.16	92.42	7.6	Si
SLV 1	143750	0.31	31415	-1158	12.16	120.42	9.9	Si
SLV 2	143750	0.31	31415	-1158	12.16	120.42	9.9	Si

Verifica dei meccanismi locali di collasso con analisi cinematica lineare

forza di aggancio al piano = 0 quota mezzeria = 3.16 Wa = 0.05 Ta = 0.0808

Comb.	N top	N base	V orto	α0	M*	e*	a0*	aLim	Verifica
SLV 12	-1395	-4855	-110	0	161.1	0.964	0	7.42296	No
SLV 11	-1395	-4855	-110	0	161.1	0.964	0	7.42296	No
SLV 10	-1206	-1241	108	0	141.9	0.96	0	7.42296	No
SLV 6	-942	-991	109	0	115.1	0.952	0	7.42296	No
SLV 7	-1132	-4606	-109	0	134.3	0.958	0	7.42296	No
SLV 8	-1132	-4606	-109	0	134.3	0.958	0	7.42296	No
SLV 9	-1206	-1241	108	0	141.9	0.96	0	7.42296	No
SLV 5	-942	-991	109	0	115.1	0.952	0	7.42296	No
SLV 2	-702	-1966	34	0.002	90.7	0.941	0.03784	8.50261	No
SLV 1	-702	-1966	34	0.002	90.7	0.941	0.03784	8.50261	No

Tabella dei coefficienti di sicurezza minimi

Stato limite	Coeff.s.	Comb.	Verifica
PF_SLU	0	SLU 10	No
V_SLU	0.192	SLU 41	No
PF_SLV	0	SLV 10	No
V_SLV	0	SLV 3	No
PFFP_SLV	0	SLV 10	No
R_SLV	0	SLV 5	No

Maschio 98

Verifiche condotte secondo D.M. 17-01-18 (N.T.C.)

Dati geometrici

X ini.	Y ini.	X fin.	Y fin.	Quota i.	Quota.s	l	Sp.	h netta	h ini.	h fin.	a	a.s.,sx	a.s.,dx
-5.088	6.44	-5.088	6.5	L3	L4	0.06	0.28	3.68	3.68	3.68			

Caratteristiche del materiale

(Circolare 7 21-01-19 C8.5.I) Muratura in mattoni pieni e malta di calce LC2_Corti

fb	fk	fvk0	fmedio	τ0	fv0	μ	ϕ	fv,lim	E	G	FC
600000			345000	9000	20000	0.58	0.77	32500	320000000	128000000	1.2

Verifica a pressoflessione nel piano secondo D.M. 17-01-18 NTC §7.8.2.2.1 in combinazioni non sismiche, γM = 3

Comb.	Quota	N	M	σ0	Mu	c.s.	Verifica
SLU 57	3.32	-2073	-39.95	123604	0	0	No, Rottura per schiacciamento
SLU 57	4.12	-1636	34.66	97544	0	0	No, Rottura per schiacciamento
SLU 58	3.32	-2050	-39.66	122231	0	0	No, Rottura per schiacciamento

Comb.	Quota	N	M	σ0	Mu	c.s.	Verifica
SLU 58	4.12	-1616	34.43	96339	0	0	No, Rottura per schiacciamento
SLU 56	3.32	-2073	-40.01	123581	0	0	No, Rottura per schiacciamento
SLU 56	4.12	-1635	34.72	97483	0	0	No, Rottura per schiacciamento
SLU 61	3.32	-2089	-39.98	124564	0	0	No, Rottura per schiacciamento
SLU 61	4.12	-1652	34.67	98492	0	0	No, Rottura per schiacciamento
SLU 60	3.32	-2089	-40.04	124542	0	0	No, Rottura per schiacciamento
SLU 60	4.12	-1651	34.74	98431	0	0	No, Rottura per schiacciamento
SLU 53	3.32	-2044	-39.07	121834	0	0	No, Rottura per schiacciamento
SLU 53	4.12	-1616	33.86	96319	0	0	No, Rottura per schiacciamento
SLU 1	3.32	-1415	-26.29	84369	0	0	No, Rottura per schiacciamento
SLU 1	4.12	-1125	22.67	67044	5.96	0.263	No, M>Mu
SLU 59	3.32	-2051	-39.6	122253	0	0	No, Rottura per schiacciamento
SLU 59	4.12	-1617	34.36	96399	0	0	No, Rottura per schiacciamento
SLU 54	3.32	-2044	-39.01	121856	0	0	No, Rottura per schiacciamento
SLU 54	4.12	-1617	33.8	96380	0	0	No, Rottura per schiacciamento
SLU 55	3.32	-2022	-38.62	120520	0	0	No, Rottura per schiacciamento
SLU 55	4.12	-1598	33.47	95276	0	0	No, Rottura per schiacciamento

Verifica a pressoflessione nel piano secondo D.M. 17-01-18 NTC §7.8.2.2.1 in combinazioni sismiche, γM = 2

Comb.	Quota	N	M	σ0	Mu	c.s.	Verifica
SLV 6	3.32	-587	-36.47	0	0	0	No, e>l/2
SLV 6	4.12	-369	48.79	0	0	0	No, e>l/2
SLV 7	3.32	-2196	12.21	130916	0	0	No, Rottura per schiacciamento
SLV 7	4.12	-2094	-30.87	124811	0	0	No, Rottura per schiacciamento
SLV 13	3.32	-1807	-93.39	0	0	0	No, e>l/2
SLV 13	4.12	-934	91.57	0	0	0	No, e>l/2
SLV 8	3.32	-2196	12.21	130916	0	0	No, Rottura per schiacciamento
SLV 8	4.12	-2094	-30.87	124811	0	0	No, Rottura per schiacciamento
SLV 9	3.32	-890	-70.6	0	0	0	No, e>l/2
SLV 9	4.12	-351	81.4	0	0	0	No, e>l/2
SLV 12	3.32	-2499	-21.92	148988	0	0	No, Rottura per schiacciamento
SLV 12	4.12	-2076	1.74	123767	0	0	No, Rottura per schiacciamento
SLV 10	3.32	-890	-70.6	0	0	0	No, e>l/2
SLV 10	4.12	-351	81.4	0	0	0	No, e>l/2
SLV 11	3.32	-2499	-21.92	148988	0	0	No, Rottura per schiacciamento
SLV 11	4.12	-2076	1.74	123767	0	0	No, Rottura per schiacciamento
SLV 5	3.32	-587	-36.47	0	0	0	No, e>l/2
SLV 5	4.12	-369	48.79	0	0	0	No, e>l/2
SLV 14	3.32	-1807	-93.39	0	0	0	No, e>l/2
SLV 14	4.12	-934	91.57	0	0	0	No, e>l/2

Verifica a taglio nel piano secondo D.M. 17-01-18 (N.T.C.) §7.8.2.2.2 con rottura per scorrimento in combinazioni non sismiche, γM = 3

Comb.	Quota	N	V par	M	σ0	σN	l'	fvd	Vt scorr.	Vt fess.diag.	Vt,lim	c.s.	Verifica
SLU 78	3.32	-2293	-176	-44.83		262369	0.0312	10833	95			0.54	No, Vu<V
SLU 78	4.12	-1806	-164	39		257300	0.0251	10833	76			0.46	No, Vu<V
SLU 80	3.32	-2270	-175	-44.48		260834	0.0311	10833	94			0.54	No, Vu<V
SLU 80	4.12	-1786	-162	38.71		256682	0.0249	10833	75			0.46	No, Vu<V
SLU 84	3.32	-2339	-180	-45.8		268500	0.0311	10833	94			0.52	No, Vu<V
SLU 84	4.12	-1841	-167	39.87		264252	0.0249	10833	75			0.45	No, Vu<V
SLU 41	3.32	-1989	-156	-39.65		236295	0.0301	10833	91			0.58	No, Vu<V
SLU 41	4.12	-1561	-145	34.62		239185	0.0233	10833	71			0.49	No, Vu<V
SLU 82	3.32	-2309	-176	-44.86		261151	0.0316	10833	96			0.54	No, Vu<V
SLU 82	4.12	-1821	-164	39.02		254144	0.0256	10833	78			0.47	No, Vu<V
SLU 79	3.32	-2270	-175	-44.54		261541	0.031	10833	94			0.54	No, Vu<V
SLU 79	4.12	-1785	-163	38.77		258006	0.0247	10833	75			0.46	No, Vu<V
SLU 83	3.32	-2338	-180	-45.86		269206	0.031	10833	94			0.52	No, Vu<V
SLU 83	4.12	-1840	-168	39.94		265573	0.0247	10833	75			0.45	No, Vu<V
SLU 74	3.32	-2263	-173	-43.95		255728	0.0316	10833	96			0.56	No, Vu<V
SLU 74	4.12	-1785	-160	38.2		248519	0.0257	10833	78			0.49	No, Vu<V
SLU 77	3.32	-2293	-176	-44.89		263070	0.0311	10833	94			0.54	No, Vu<V
SLU 77	4.12	-1804	-164	39.06		258600	0.0249	10833	76			0.46	No, Vu<V
SLU 81	3.32	-2309	-177	-44.92		261835	0.0315	10833	96			0.54	No, Vu<V
SLU 81	4.12	-1820	-164	39.08		255383	0.0255	10833	77			0.47	No, Vu<V

Verifica a taglio nel piano secondo D.M. 17-01-18 (N.T.C.) §7.8.2.2.2 con rottura per scorrimento in combinazioni sismiche, γM = 2

Comb.	Quota	N	V par	M	σ0	σN	l'	fvd	Vt scorr.	Vt fess.diag.	Vt,lim	c.s.	Verifica
SLV 9	3.32	-890	-344	-70.6		0	0	8333	0			0	No, Vu<V

Comb.	Quota	N	V par	M	σ0	σN	l'	fvd	Vt scorr.	Vt fess.diag.	Vt,lim	c.s.	Verifica
SLV 9	4.12	-351	-327	81.4		0	0	8333	0			0	No, Vu<V
SLV 14	3.32	-1807	-376	-93.39		0	0	8333	0			0	No, Vu<V
SLV 14	4.12	-934	-354	91.57		0	0	8333	0			0	No, Vu<V
SLV 15	3.32	-2290	-277	-78.78		0	0	8333	0			0	No, Vu<V
SLV 15	4.12	-1452	-257	67.68		0	0	8333	0			0	No, Vu<V
SLV 13	3.32	-1807	-376	-93.39		0	0	8333	0			0	No, Vu<V
SLV 13	4.12	-934	-354	91.57		0	0	8333	0			0	No, Vu<V
SLV 6	3.32	-587	-217	-36.47		0	0	8333	0			0	No, Vu<V
SLV 6	4.12	-369	-208	48.79		0	0	8333	0			0	No, Vu<V
SLV 16	3.32	-2290	-277	-78.78		0	0	8333	0			0	No, Vu<V
SLV 16	4.12	-1452	-257	67.68		0	0	8333	0			0	No, Vu<V
SLV 4	3.32	-1279	147	35		587322	0.0078	16250	35			0.24	No, Vu<V
SLV 4	4.12	-1510	141	-41.04		647176	0.0083	16250	38			0.27	No, Vu<V
SLV 5	3.32	-587	-217	-36.47		0	0	8333	0			0	No, Vu<V
SLV 5	4.12	-369	-208	48.79		0	0	8333	0			0	No, Vu<V
SLV 3	3.32	-1279	147	35		587322	0.0078	16250	35			0.24	No, Vu<V
SLV 3	4.12	-1510	141	-41.04		647176	0.0083	16250	38			0.27	No, Vu<V
SLV 10	3.32	-890	-344	-70.6		0	0	8333	0			0	No, Vu<V
SLV 10	4.12	-351	-327	81.4		0	0	8333	0			0	No, Vu<V

Verifica a pressoflessione fuori piano D.M. 17-01-18 (N.T.C.)

quota 3.16 Wa 0.05 denominatore 8 γM = 2

Comb.	fd	Sa	σ0	N	M	Mc	Coeff.s.	Verifica
SLV 5	143750	0.31	0	92	5.54	0	0	No, Trazione
SLV 6	143750	0.31	0	92	5.54	0	0	No, Trazione
SLV 1	143750	0.31	0	-18	5.54	0	0	No, e>t/2
SLV 9	143750	0.31	0	-10	5.54	0	0	No, e>t/2
SLV 10	143750	0.31	0	-10	5.54	0	0	No, e>t/2
SLV 2	143750	0.31	0	-18	5.54	0	0	No, e>t/2
SLV 4	143750	0.31	12667	-212	5.54	26.66	4.82	Si
SLV 3	143750	0.31	12667	-212	5.54	26.66	4.82	Si
SLV 14	143750	0.31	21160	-355	5.54	41.09	7.42	Si
SLV 13	143750	0.31	21160	-355	5.54	41.09	7.42	Si

Verifica dei meccanismi locali di collasso con analisi cinematica lineare

forza di aggancio al piano = 0 quota mezzeria = 3.16 Wa = 0.05 Ta = 0.0808

Comb.	N top	N base	V orto	α0	M*	e*	a0*	aLim	Verifica
SLV 15	-386	-2093	-1	0.04	48	0.948	0.61947	8.50261	No
SLV 16	-386	-2093	-1	0.04	48	0.948	0.61947	8.50261	No
SLV 14	-388	-1661	-1	0.041	48.3	0.948	0.6311	8.50261	No
SLV 13	-388	-1661	-1	0.041	48.3	0.948	0.6311	8.50261	No
SLV 1	-250	-375	0	0.044	34.3	0.931	0.68849	8.50261	No
SLV 2	-250	-375	0	0.044	34.3	0.931	0.68849	8.50261	No
SLV 3	-248	-808	0	0.045	34.1	0.93	0.6986	8.50261	No
SLV 4	-248	-808	0	0.045	34.1	0.93	0.6986	8.50261	No
SLV 12	-335	-2148	-1	0.041	42.8	0.942	0.62543	7.42296	No
SLV 11	-335	-2148	-1	0.041	42.8	0.942	0.62543	7.42296	No

Tabella dei coefficienti di sicurezza minimi

Stato limite	Coeff.s.	Comb.	Verifica
PF_SLU	0	SLU 1	No
V_SLU	0.448	SLU 83	No
PF_SLV	0	SLV 5	No
V_SLV	0	SLV 5	No
PFFP_SLV	0	SLV 6	No
R_SLV	0.073	SLV 15	No

Maschio 99

Verifiche condotte secondo D.M. 17-01-18 (N.T.C.)

Dati geometrici

X ini.	Y ini.	X fin.	Y fin.	Quota i.	Quota.s	l	Sp.	h netta	h ini.	h fin.	a	a.s.,sx	a.s.,dx
-5.937	-3.169	-6.467	-3.169	L3	L4	0.53	0.28	3.68	3.68	3.68			

Caratteristiche del materiale

(Circolare 7 21-01-19 C8.5.I) Muratura in mattoni pieni e malta di calce LC2_Corti

fb	fk	fvk0	fmedio	τ0	fv0	μ	ϕ	fv,lim	E	G	FC
600000			345000	9000	20000	0.58	0.77	32500	320000000	128000000	1.2

Verifica a pressoflessione nel piano secondo D.M. 17-01-18 NTC §7.8.2.2.1 in combinazioni non sismiche, γM = 3

Comb.	Quota	N	M	σ0	Mu	c.s.	Verifica
SLU 80	3.32	-10657	352.67	71789	335.34	0.951	No, M>Mu
SLU 80	4.12	-11944	-422.05	80463	38.68	0.092	No, M>Mu
SLU 82	3.32	-10980	381.76	73970	267.58	0.701	No, M>Mu
SLU 82	4.12	-12342	-461.97	83144	0	0	No, Rottura per schiacciamento
SLU 78	3.32	-10746	358.96	72390	317.1	0.883	No, M>Mu
SLU 78	4.12	-12049	-431.58	81165	11.5	0.027	No, M>Mu
SLU 81	3.32	-11044	443.23	74398	253.73	0.572	No, M>Mu
SLU 81	4.12	-12559	-506.52	84603	0	0	No, Rottura per schiacciamento
SLU 84	3.32	-11060	374.98	74508	250.14	0.667	No, M>Mu
SLU 84	4.12	-12427	-450.18	83714	0	0	No, Rottura per schiacciamento
SLU 79	3.32	-10720	414.14	72217	322.39	0.778	No, M>Mu

Comb.	Quota	N	M	σ0	Mu	c.s.	Verifica
SLU 79	4.12	-12161	-466.6	81923	0	0	No, Rottura per schiacciamento
SLU 74	3.32	-10730	427.2	72280	320.47	0.75	No, M>Mu
SLU 74	4.12	-12181	-487.92	82055	0	0	No, Rottura per schiacciamento
SLU 77	3.32	-10810	420.43	72819	303.91	0.723	No, M>Mu
SLU 77	4.12	-12265	-476.13	82625	0	0	No, Rottura per schiacciamento
SLU 75	3.32	-10666	365.73	71852	333.44	0.912	No, M>Mu
SLU 75	4.12	-11964	-443.36	80595	33.6	0.076	No, M>Mu
SLU 83	3.32	-11124	436.45	74937	236.08	0.541	No, M>Mu
SLU 83	4.12	-12644	-494.74	85173	0	0	No, Rottura per schiacciamento

Verifica a pressoflessione nel piano secondo D.M. 17-01-18 NTC §7.8.2.2.1 in combinazioni sismiche, γM = 2

Comb.	Quota	N	M	σ0	Mu	c.s.	Verifica
SLV 1	3.32	-5849	1141	39402	1050.49	0.921	No, M>Mu
SLV 1	4.12	-6956	-1746.32	46856	1136.74	0.651	No, M>Mu
SLV 3	3.32	-4203	1142.25	0	0	0	No, e>l/2
SLV 3	4.12	-5978	-1533.58	40274	1062.42	0.693	No, M>Mu
SLV 14	3.32	-10512	-535.09	70817	1171.57	2.189	Si
SLV 14	4.12	-10678	834.43	71933	1164.18	1.395	Si
SLV 6	3.32	-9402	552.9	63338	1200.39	2.171	Si
SLV 6	4.12	-9398	-1091.26	63313	1200.43	1.1	Si
SLV 13	3.32	-10512	-535.09	70817	1171.57	2.189	Si
SLV 13	4.12	-10678	834.43	71933	1164.18	1.395	Si
SLV 2	3.32	-5849	1141	39402	1050.49	0.921	No, M>Mu
SLV 2	4.12	-6956	-1746.32	46856	1136.74	0.651	No, M>Mu
SLV 4	3.32	-4203	1142.25	0	0	0	No, e>l/2
SLV 4	4.12	-5978	-1533.58	40274	1062.42	0.693	No, M>Mu
SLV 16	3.32	-8866	-533.84	59725	1201.41	2.251	Si
SLV 16	4.12	-9701	1047.18	65350	1196.18	1.142	Si
SLV 5	3.32	-9402	552.9	63338	1200.39	2.171	Si
SLV 5	4.12	-9398	-1091.26	63313	1200.43	1.1	Si
SLV 15	3.32	-8866	-533.84	59725	1201.41	2.251	Si
SLV 15	4.12	-9701	1047.18	65350	1196.18	1.142	Si

Verifica a taglio nel piano secondo D.M. 17-01-18 (N.T.C.) §7.8.2.2.2 con rottura per scorrimento in combinazioni non sismiche, γM = 3

Comb.	Quota	N	V par	M	σ0	σN	l'	fvd	Vt scorr.	Vt fess.diag.	Vt,lim	c.s.	Verifica
SLU 62	3.32	-10122	1201	400.56		68189	0.5302	10833	1608			1.34	Si
SLU 62	4.12	-11477	1202	-453.66		77314	0.5302	10833	1608			1.34	Si
SLU 79	3.32	-10720	1242	414.14		72217	0.5302	10833	1608			1.3	Si
SLU 79	4.12	-12161	1242	-466.6		81923	0.5302	10833	1608			1.29	Si
SLU 74	3.32	-10730	1285	427.2		72280	0.5302	10833	1608			1.25	Si
SLU 74	4.12	-12181	1286	-487.92		82055	0.5302	10833	1608			1.25	Si
SLU 83	3.32	-11124	1311	436.45		74937	0.5302	10833	1608			1.23	Si
SLU 83	4.12	-12644	1311	-494.74		85173	0.5302	10833	1608			1.23	Si
SLU 60	3.32	-10042	1224	407.34		67650	0.5302	10833	1608			1.31	Si
SLU 60	4.12	-11392	1224	-465.44		76744	0.5302	10833	1608			1.31	Si
SLU 82	3.32	-10980	1189	381.76		73970	0.5302	10833	1608			1.35	Si
SLU 82	4.12	-12342	1188	-461.97		83144	0.5302	10833	1608			1.35	Si
SLU 66	3.32	-9601	1176	390.95		64677	0.5302	10833	1608			1.37	Si
SLU 66	4.12	-10857	1177	-449.76		73140	0.5302	10833	1608			1.37	Si
SLU 81	3.32	-11044	1334	443.23		74398	0.5302	10833	1608			1.21	Si
SLU 81	4.12	-12559	1334	-506.52		84603	0.5302	10833	1608			1.21	Si
SLU 64	3.32	-9432	1178	391.44		63537	0.5302	10833	1608			1.36	Si
SLU 64	4.12	-10669	1179	-452.01		71869	0.5302	10833	1608			1.36	Si
SLU 77	3.32	-10810	1262	420.43		72819	0.5302	10833	1608			1.27	Si
SLU 77	4.12	-12265	1263	-476.13		82625	0.5302	10833	1608			1.27	Si

Verifica a taglio nel piano secondo D.M. 17-01-18 (N.T.C.) §7.8.2.2.2 con rottura per scorrimento in combinazioni sismiche, γM = 2

Comb.	Quota	N	V par	M	σ0	σN	l'	fvd	Vt scorr.	Vt fess.diag.	Vt,lim	c.s.	Verifica
SLV 6	3.32	-9402	1358	552.9		63338	0.5302	16250	2412			1.78	Si
SLV 6	4.12	-9398	1599	-1091.26		75107	0.4469	16250	2033			1.27	Si
SLV 7	3.32	-3914	2084	557.09		37960	0.3682	15925	1642			0.79	No, Vu<V
SLV 7	4.12	-6141	1884	-382.11		41371	0.5302	16250	2412			1.28	Si
SLV 15	3.32	-8866	-1670	-533.84		59725	0.5302	16250	2412			1.44	Si
SLV 15	4.12	-9701	-1803	1047.18		73496	0.4714	16250	2145			1.19	Si
SLV 16	3.32	-8866	-1670	-533.84		59725	0.5302	16250	2412			1.44	Si
SLV 16	4.12	-9701	-1803	1047.18		73496	0.4714	16250	2145			1.19	Si
SLV 1	3.32	-5849	3497	1141		99463	0.21	16250	956			0.27	No, Vu<V
SLV 1	4.12	-6956	3631	-1746.32		590925	0.042	16250	191			0.05	No, Vu<V
SLV 3	3.32	-4203	3715	1142.25		0	0	8333	0			0	No, Vu<V
SLV 3	4.12	-5978	3716	-1533.58		831200	0.0257	16250	117			0.03	No, Vu<V
SLV 8	3.32	-3914	2084	557.09		37960	0.3682	15925	1642			0.79	No, Vu<V
SLV 8	4.12	-6141	1884	-382.11		41371	0.5302	16250	2412			1.28	Si
SLV 4	3.32	-4203	3715	1142.25		0	0	8333	0			0	No, Vu<V
SLV 4	4.12	-5978	3716	-1533.58		831200	0.0257	16250	117			0.03	No, Vu<V
SLV 5	3.32	-9402	1358	552.9		63338	0.5302	16250	2412			1.78	Si
SLV 5	4.12	-9398	1599	-1091.26		75107	0.4469	16250	2033			1.27	Si
SLV 2	3.32	-5849	3497	1141		99463	0.21	16250	956			0.27	No, Vu<V
SLV 2	4.12	-6956	3631	-1746.32		590925	0.042	16250	191			0.05	No, Vu<V

Verifica a pressoflessione fuori piano D.M. 17-01-18 (N.T.C.)

quota 3.16 Wa 0.05 denominatore 8 γM = 2

Comb.	fd	Sa	σ0	N	M	Mc	Coeff.s.	Verifica
SLV 7	143750	0.31	21911	-3253	47.87	373.71	7.81	Si
SLV 8	143750	0.31	21911	-3253	47.87	373.71	7.81	Si
SLV 12	143750	0.31	24986	-3709	47.87	413.09	8.63	Si

Comb.	fd	Sa	σ0	N	M	Mc	Coeff.s.	Verifica
SLV 11	143750	0.31	24986	-3709	47.87	413.09	8.63	Si
SLV 4	143750	0.31	30569	-4538	47.87	476.36	9.95	Si
SLV 3	143750	0.31	30569	-4538	47.87	476.36	9.95	Si
SLV 15	143750	0.31	40820	-6059	47.87	564.92	11.8	Si
SLV 16	143750	0.31	40820	-6059	47.87	564.92	11.8	Si
SLV 2	143750	0.31	41065	-6096	47.87	566.61	11.84	Si
SLV 1	143750	0.31	41065	-6096	47.87	566.61	11.84	Si

Verifica dei meccanismi locali di collasso con analisi cinematica lineare

forza di aggancio al piano = 0 quota mezzeria = 3.16 Wa = 0.05 Ta = 0.0808

Comb.	N top	N base	V orto	α0	M*	e*	a0*	aLim	Verifica
SLV 13	-4242	-7064	-3	0.041	509	0.956	0.62934	8.50261	No
SLV 14	-4242	-7064	-3	0.041	509	0.956	0.62934	8.50261	No
SLV 16	-3690	-4772	-4	0.042	452.8	0.951	0.6368	8.50261	No
SLV 15	-3690	-4772	-4	0.042	452.8	0.951	0.6368	8.50261	No
SLV 2	-3073	-8173	-5	0.042	390.3	0.944	0.6465	8.50261	No
SLV 1	-3073	-8173	-5	0.042	390.3	0.944	0.6465	8.50261	No
SLV 4	-2521	-5881	-5	0.042	334.4	0.936	0.65961	8.50261	No
SLV 3	-2521	-5881	-5	0.042	334.4	0.936	0.65961	8.50261	No
SLV 10	-4477	-10127	-3	0.041	532.9	0.957	0.62634	7.42296	No
SLV 9	-4477	-10127	-3	0.041	532.9	0.957	0.62634	7.42296	No

Tabella dei coefficienti di sicurezza minimi

Stato limite	Coeff.s.	Comb.	Verifica
PF_SLU	0	SLU 74	No
V_SLU	1.205	SLU 81	Si
PF_SLV	0	SLV 3	No
V_SLV	0	SLV 3	No
PFFP_SLV	7.807	SLV 7	Si
R_SLV	0.074	SLV 13	No

Maschio 100

Verifiche condotte secondo D.M. 17-01-18 (N.T.C.)

Dati geometrici

X ini.	Y ini.	X fin.	Y fin.	Quota i.	Quota.s	l	Sp.	h netta	h ini.	h fin.	a	a.s.,sx	a.s.,dx
-2.952	-3.169	-5.437	-3.169	L3	L4	2.485	0.28	3.68	3.68	3.68			

Caratteristiche del materiale

(Circolare 7 21-01-19 C8.5.I) Muratura in mattoni pieni e malta di calce LC2_Corti

fb	fk	fvk0	fmedio	τ0	fv0	μ	ϕ	fv,lim	E	G	FC
600000			345000	9000	20000	0.58	0.77	32500	320000000	128000000	1.2

Verifica a pressoflessione nel piano secondo D.M. 17-01-18 NTC §7.8.2.2.1 in combinazioni non sismiche, γM = 3

Comb.	Quota	N	M	σ0	Mu	c.s.	Verifica
SLU 66	3.32	-15630	7498.86	22464	14065.13	1.876	Si
SLU 66	4.12	-14286	3006.29	20531	13276.08	4.416	Si
SLU 56	3.32	-15917	7584.67	22875	14222.7	1.875	Si
SLU 56	4.12	-14588	3117.89	20965	13460.25	4.317	Si
SLU 81	3.32	-18307	8514.09	26311	15399.4	1.809	Si
SLU 81	4.12	-16962	3377.17	24378	14768.18	4.373	Si
SLU 60	3.32	-16455	7807.33	23649	14509.6	1.858	Si
SLU 60	4.12	-15126	3100.45	21739	13778.52	4.444	Si
SLU 83	3.32	-18381	8529.8	26417	15431.8	1.809	Si
SLU 83	4.12	-17036	3446.53	24484	14804.93	4.296	Si
SLU 53	3.32	-15843	7568.97	22769	14182.32	1.874	Si
SLU 53	4.12	-14514	3048.53	20859	13415.56	4.401	Si
SLU 77	3.32	-17769	8291.44	25537	15156.22	1.828	Si
SLU 77	4.12	-16424	3394.61	23604	14493.25	4.269	Si
SLU 62	3.32	-16529	7823.03	23755	14548	1.86	Si
SLU 62	4.12	-15200	3169.81	21845	13821.22	4.36	Si
SLU 79	3.32	-17570	8212.55	25252	15063.44	1.834	Si
SLU 79	4.12	-16225	3379.19	23319	14388.76	4.258	Si
SLU 74	3.32	-17695	8275.74	25431	15121.84	1.827	Si
SLU 74	4.12	-16350	3325.25	23498	14454.51	4.347	Si

Verifica a pressoflessione nel piano secondo D.M. 17-01-18 NTC §7.8.2.2.1 in combinazioni sismiche, γM = 2

Comb.	Quota	N	M	σ0	Mu	c.s.	Verifica
SLV 7	3.32	-1275	6818.66	0	0	0	No, e>l/2
SLV 7	4.12	-1019	598.3	1465	1251.06	2.091	Si
SLV 13	3.32	-12736	3256.63	18304	13454.12	4.131	Si
SLV 13	4.12	-11490	10289.23	16514	12347.22	1.2	Si
SLV 12	3.32	358	5375.58	0	0	0	No, Trazione
SLV 12	4.12	602	5548.49	0	0	0	No, Trazione
SLV 11	3.32	358	5375.58	0	0	0	No, Trazione
SLV 11	4.12	602	5548.49	0	0	0	No, Trazione
SLV 14	3.32	-12736	3256.63	18304	13454.12	4.131	Si
SLV 14	4.12	-11490	10289.23	16514	12347.22	1.2	Si
SLV 3	3.32	-11257	8267.82	16179	12135.07	1.468	Si
SLV 3	4.12	-10441	-5733.96	15006	11379.84	1.985	Si
SLV 4	3.32	-11257	8267.82	16179	12135.07	1.468	Si
SLV 4	4.12	-10441	-5733.96	15006	11379.84	1.985	Si
SLV 8	3.32	-1275	6818.66	0	0	0	No, e>l/2
SLV 8	4.12	-1019	598.3	1465	1251.06	2.091	Si
SLV 15	3.32	-5813	3457.57	8355	6729.02	1.946	Si

Comb.	Quota	N	M	σ0	Mu	c.s.	Verifica
SLV 15	4.12	-5036	10766.68	0	0	0	No, e>l/2
SLV 16	3.32	-5813	3457.57	8355	6729.02	1.946	Si
SLV 16	4.12	-5036	10766.68	0	0	0	No, e>l/2

Verifica a taglio nel piano secondo D.M. 17-01-18 (N.T.C.) §7.8.2.2.2 con rottura per scorrimento in combinazioni non sismiche, γM = 3

Comb.	Quota	N	V par	M	σ0	σN	l'	fvd	Vt scorr.	Vt fess.diag.	Vt,lim	c.s.	Verifica
SLU 79	3.32	-17570	6031	8212.55		26987	2.3253	9154	5960			0.99	No, Vu<V
SLU 79	4.12	-16225	6031	3379.19		23319	2.485	8665	6029			1	No, Vu<V
SLU 64	3.32	-15358	5593	7404.28		24045	2.2812	8762	5596			1	Si
SLU 64	4.12	-14013	5593	2921.52		20140	2.485	8241	5734			1.03	Si
SLU 77	3.32	-17769	6111	8291.44		27264	2.3276	9191	5990			0.98	No, Vu<V
SLU 77	4.12	-16424	6111	3394.61		23604	2.485	8703	6055			0.99	No, Vu<V
SLU 62	3.32	-16529	5805	7823.03		25581	2.3076	8966	5793			1	No, Vu<V
SLU 62	4.12	-15200	5805	3169.81		21845	2.485	8468	5892			1.01	Si
SLU 66	3.32	-15630	5605	7498.86		24396	2.2882	8808	5644			1.01	Si
SLU 66	4.12	-14286	5605	3006.29		20531	2.485	8293	5770			1.03	Si
SLU 81	3.32	-18307	6411	8514.09		28034	2.3323	9293	6069			0.95	No, Vu<V
SLU 81	4.12	-16962	6411	3377.17		24378	2.485	8806	6127			0.96	No, Vu<V
SLU 74	3.32	-17695	6178	8275.74		27188	2.3244	9181	5975			0.97	No, Vu<V
SLU 74	4.12	-16350	6178	3325.25		23498	2.485	8689	6046			0.98	No, Vu<V
SLU 60	3.32	-16455	5872	7807.33		25506	2.3041	8956	5778			0.98	No, Vu<V
SLU 60	4.12	-15126	5872	3100.45		21739	2.485	8454	5882			1	Si
SLU 83	3.32	-18381	6344	8529.8		28110	2.3353	9304	6084			0.96	No, Vu<V
SLU 83	4.12	-17036	6344	3446.53		24484	2.485	8820	6137			0.97	No, Vu<V
SLU 53	3.32	-15843	5639	7568.97		24662	2.2942	8844	5681			1.01	Si
SLU 53	4.12	-14514	5639	3048.53		20859	2.485	8337	5801			1.03	Si

Verifica a taglio nel piano secondo D.M. 17-01-18 (N.T.C.) §7.8.2.2.2 con rottura per scorrimento in combinazioni sismiche, γM = 2

Comb.	Quota	N	V par	M	σ0	σN	l'	fvd	Vt scorr.	Vt fess.diag.	Vt,lim	c.s.	Verifica
SLV 15	3.32	-5813	-9318	3457.57		10684	1.9432	10470	5697			0.61	No, Vu<V
SLV 15	4.12	-5036	-8947	10766.68		0	0	8333	0			0	No, Vu<V
SLV 8	3.32	-1275	7451	6818.66		0	0	8333	0			0	No, Vu<V
SLV 8	4.12	-1019	8451	598.3		1851	1.9662	8704	4792			0.57	No, Vu<V
SLV 12	3.32	358	-584	5375.58		0	0	8333	0			0	No, Vu<V
SLV 12	4.12	602	455	5548.49		0	0	8333	0			0	No, Vu<V
SLV 11	3.32	358	-584	5375.58		0	0	8333	0			0	No, Vu<V
SLV 11	4.12	602	455	5548.49		0	0	8333	0			0	No, Vu<V
SLV 2	3.32	-18180	18013	8066.89		27095	2.3964	13752	9228			0.51	No, Vu<V
SLV 2	4.12	-16896	17642	-6211.42		24282	2.485	13190	9177			0.52	No, Vu<V
SLV 3	3.32	-11257	17464	8267.82		26378	1.5242	13609	5808			0.33	No, Vu<V
SLV 3	4.12	-10441	17705	-5733.96		17928	2.08	11919	6942			0.39	No, Vu<V
SLV 16	3.32	-5813	-9318	3457.57		10684	1.9432	10470	5697			0.61	No, Vu<V
SLV 16	4.12	-5036	-8947	10766.68		0	0	8333	0			0	No, Vu<V
SLV 4	3.32	-11257	17464	8267.82		26378	1.5242	13609	5808			0.33	No, Vu<V
SLV 4	4.12	-10441	17705	-5733.96		17928	2.08	11919	6942			0.39	No, Vu<V
SLV 7	3.32	-1275	7451	6818.66		0	0	8333	0			0	No, Vu<V
SLV 7	4.12	-1019	8451	598.3		1851	1.9662	8704	4792			0.57	No, Vu<V
SLV 1	3.32	-18180	18013	8066.89		27095	2.3964	13752	9228			0.51	No, Vu<V
SLV 1	4.12	-16896	17642	-6211.42		24282	2.485	13190	9177			0.52	No, Vu<V

Verifica a pressoflessione fuori piano D.M. 17-01-18 (N.T.C.)

quota 3.16 Wa 0.05 denominatore 8 γM = 2

Comb.	fd	Sa	σ0	N	M	Mc	Coeff.s.	Verifica
SLV 11	143750	0.31	0	1357	224.38	0	0	No, Trazione
SLV 8	143750	0.31	0	885	224.38	0	0	No, Trazione
SLV 7	143750	0.31	0	885	224.38	0	0	No, Trazione
SLV 12	143750	0.31	0	1357	224.38	0	0	No, Trazione
SLV 16	143750	0.31	8006	-5570	224.38	728.76	3.25	Si
SLV 15	143750	0.31	8006	-5570	224.38	728.76	3.25	Si
SLV 3	143750	0.31	10266	-7143	224.38	916.05	4.08	Si
SLV 4	143750	0.31	10266	-7143	224.38	916.05	4.08	Si
SLV 14	143750	0.31	17217	-11980	224.38	1440.84	6.42	Si
SLV 13	143750	0.31	17217	-11980	224.38	1440.84	6.42	Si

Verifica dei meccanismi locali di collasso con analisi cinematica lineare

forza di aggancio al piano = 0 quota mezzeria = 3.16 Wa = 0.05 Ta = 0.0808

Comb.	N top	N base	V orto	α0	M*	e*	a0*	aLim	Verifica
SLV 12	-3206	4442	-84	0	0	0	0	7.42296	No, Trazione
SLV 7	-3469	5313	-66	0	0	0	0	7.42296	No, Trazione
SLV 8	-3469	5313	-66	0	0	0	0	7.42296	No, Trazione
SLV 11	-3206	4442	-84	0	0	0	0	7.42296	No, Trazione
SLV 2	-13173	-7379	61	0.04	1704.7	0.94	0.61504	8.50261	No
SLV 1	-13173	-7379	61	0.04	1704.7	0.94	0.61504	8.50261	No
SLV 5	-17926	-15776	95	0.038	2186.8	0.952	0.57507	7.42296	No
SLV 6	-17926	-15776	95	0.038	2186.8	0.952	0.57507	7.42296	No
SLV 16	-7959	-3954	-50	0.042	1178.6	0.92	0.65956	8.50261	No
SLV 15	-7959	-3954	-50	0.042	1178.6	0.92	0.65956	8.50261	No

Tabella dei coefficienti di sicurezza minimi

Stato limite	Coeff.s.	Comb.	Verifica
PF_SLU	1.809	SLU 81	Si
V_SLU	0.947	SLU 81	No
PF_SLV	0	SLV 12	No
V_SLV	0	SLV 7	No
PFFP_SLV	0	SLV 12	No
R_SLV	0	SLV 12	No

Maschio 101

Verifiche condotte secondo D.M. 17-01-18 (N.T.C.)

Dati geometrici

X ini.	Y ini.	X fin.	Y fin.	Quota i.	Quota.s	l	Sp.	h netta	h ini.	h fin.	a	a.s.,sx	a.s.,dx
-0.117	-3.169	-1.952	-3.169	L3	L4	1.835	0.28	3.68	3.68	3.68			

Caratteristiche del materiale

(Circolare 7 21-01-19 C8.5.I) Muratura in mattoni pieni e malta di calce LC2_Corti

fb	fk	fvk0	fmedio	τ0	fv0	μ	ϕ	fv,lim	E	G	FC
600000			345000	9000	20000	0.58	0.77	32500	320000000	128000000	1.2

Verifica a pressoflessione nel piano secondo D.M. 17-01-18 NTC §7.8.2.2.1 in combinazioni non sismiche, γM = 3

Comb.	Quota	N	M	σ0	Mu	c.s.	Verifica
SLU 60	2.22	-14465	-6442.98	28154	8684.9	1.348	Si
SLU 60	4.12	-20192	565.06	39299	9588.27	16.969	Si
SLU 58	2.22	-14102	-6341.85	27447	8579.18	1.353	Si
SLU 58	4.12	-19660	554.56	38263	9564.91	17.248	Si
SLU 56	2.22	-14256	-6395.07	27746	8624.64	1.349	Si
SLU 56	4.12	-19874	548.75	38680	9575.81	17.45	Si
SLU 69	2.22	-14185	-6361.93	27609	8603.89	1.352	Si
SLU 69	4.12	-19706	510.99	38354	9567.45	18.723	Si
SLU 79	2.22	-15498	-6927.71	30164	8954.11	1.293	Si
SLU 79	4.12	-21849	670.31	42524	9581.46	14.294	Si
SLU 83	2.22	-15994	-7110.91	31129	9066.71	1.275	Si
SLU 83	4.12	-22620	708.45	44025	9537.25	13.462	Si
SLU 77	2.22	-15652	-6980.92	30463	8990.17	1.288	Si
SLU 77	4.12	-22063	664.5	42941	9571.79	14.405	Si
SLU 74	2.22	-15519	-6898.84	30205	8959.09	1.299	Si
SLU 74	4.12	-21824	636.85	42476	9582.45	15.047	Si
SLU 62	2.22	-14598	-6525.06	28412	8722.12	1.337	Si
SLU 62	4.12	-20431	592.71	39764	9594.71	16.188	Si
SLU 81	2.22	-15861	-7028.83	30870	9037.62	1.286	Si
SLU 81	4.12	-22381	680.81	43560	9553.73	14.033	Si

Verifica a pressoflessione nel piano secondo D.M. 17-01-18 NTC §7.8.2.2.1 in combinazioni sismiche, γM = 2

Comb.	Quota	N	M	σ0	Mu	c.s.	Verifica
SLV 8	2.22	-748	-2562.86	0	0	0	No, e>l/2
SLV 8	4.12	-2761	-1361.63	5374	2421.89	1.779	Si
SLV 11	2.22	-2298	-6225.19	0	0	0	No, e>l/2
SLV 11	4.12	-8498	1465.8	16540	6741.67	4.599	Si
SLV 15	2.22	-10531	-10764.37	0	0	0	No, e>l/2
SLV 15	4.12	-21624	4989.4	42086	13006.24	2.607	Si
SLV 14	2.22	-16038	-10992.77	31215	10955.94	0.997	No, M>Mu
SLV 14	4.12	-27137	5182.21	52816	14135.82	2.728	Si
SLV 13	2.22	-16038	-10992.77	31215	10955.94	0.997	No, M>Mu
SLV 13	4.12	-27137	5182.21	52816	14135.82	2.728	Si
SLV 7	2.22	-748	-2562.86	0	0	0	No, e>l/2
SLV 7	4.12	-2761	-1361.63	5374	2421.89	1.779	Si
SLV 12	2.22	-2298	-6225.19	0	0	0	No, e>l/2
SLV 12	4.12	-8498	1465.8	16540	6741.67	4.599	Si
SLV 16	2.22	-10531	-10764.37	0	0	0	No, e>l/2
SLV 16	4.12	-21624	4989.4	42086	13006.24	2.607	Si
SLV 4	2.22	-5365	1443.4	10441	4501.62	3.119	Si
SLV 4	4.12	-2500	-4435.35	0	0	0	No, e>l/2
SLV 3	2.22	-5365	1443.4	10441	4501.62	3.119	Si
SLV 3	4.12	-2500	-4435.35	0	0	0	No, e>l/2

Verifica a taglio nel piano secondo D.M. 17-01-18 (N.T.C.) §7.8.2.2.2 con rottura per scorrimento in combinazioni non sismiche, γM = 3

Comb.	Quota	N	V par	M	σ0	σN	l'	fvd	Vt scorr.	Vt fess.diag.	Vt,lim	c.s.	Verifica
SLU 58	2.22	-14102	-7490	-6341.85		35888	1.4034	10341	4063			0.54	No, Vu<V
SLU 58	4.12	-19660	-7472	554.56		38263	1.835	10657	5476			0.73	No, Vu<V
SLU 83	2.22	-15994	-8505	-7110.91		40263	1.4187	10833	4303			0.51	No, Vu<V
SLU 83	4.12	-22620	-8485	708.45		44025	1.835	10833	5566			0.66	No, Vu<V
SLU 60	2.22	-14465	-7631	-6442.98		36477	1.4163	10419	4132			0.54	No, Vu<V
SLU 60	4.12	-20192	-7613	565.06		39299	1.835	10795	5547			0.73	No, Vu<V
SLU 79	2.22	-15498	-8256	-6927.71		39214	1.4115	10784	4262			0.52	No, Vu<V
SLU 79	4.12	-21849	-8236	670.31		42524	1.835	10833	5566			0.68	No, Vu<V
SLU 62	2.22	-14598	-7740	-6525.06		36935	1.4116	10480	4142			0.54	No, Vu<V
SLU 62	4.12	-20431	-7721	592.71		39764	1.835	10833	5566			0.72	No, Vu<V
SLU 77	2.22	-15652	-8310	-6980.92		39520	1.4145	10825	4287			0.52	No, Vu<V
SLU 77	4.12	-22063	-8290	664.5		42941	1.835	10833	5566			0.67	No, Vu<V
SLU 56	2.22	-14256	-7545	-6395.07		36193	1.4067	10381	4089			0.54	No, Vu<V
SLU 56	4.12	-19874	-7526	548.75		38680	1.835	10713	5504			0.73	No, Vu<V
SLU 81	2.22	-15861	-8396	-7028.83		39807	1.4231	10833	4317			0.51	No, Vu<V
SLU 81	4.12	-22381	-8376	680.81		43560	1.835	10833	5566			0.66	No, Vu<V
SLU 69	2.22	-14185	-7472	-6361.93		36006	1.407	10356	4080			0.55	No, Vu<V
SLU 69	4.12	-19706	-7454	510.99		38354	1.835	10669	5482			0.74	No, Vu<V
SLU 74	2.22	-15519	-8201	-6898.84		39063	1.4189	10764	4276			0.52	No, Vu<V
SLU 74	4.12	-21824	-8181	636.85		42476	1.835	10833	5566			0.68	No, Vu<V

Verifica a taglio nel piano secondo D.M. 17-01-18 (N.T.C.) §7.8.2.2.2 con rottura per scorrimento in combinazioni sismiche, γM = 2

Comb.	Quota	N	V par	M	σ0	σN	l'	fvd	Vt scorr.	Vt fess.diag.	Vt,lim	c.s.	Verifica
SLV 4	2.22	-5365	3540	1443.4		10441	1.835	10422	5355			1.51	Si
SLV 4	4.12	-2500	3507	-4435.35		0	0	8333	0			0	No, Vu<V
SLV 14	2.22	-16038	-14759	-10992.77		82264	0.6963	16250	3168			0.21	No, Vu<V
SLV 14	4.12	-27137	-14699	5182.21		52816	1.835	16250	8349			0.57	No, Vu<V
SLV 11	2.22	-2298	-7785	-6225.19		0	0	8333	0			0	No, Vu<V

Comb.	Quota	N	V par	M	σ0	σN	l'	fvd	Vt scorr.	Vt fess.diag.	Vt,lim	c.s.	Verifica
SLV 11	4.12	-8498	-7200	1465.8		16540	1.835	11641	5981			0.83	No, Vu<V
SLV 13	2.22	-16038	-14759	-10992.77		82264	0.6963	16250	3168			0.21	No, Vu<V
SLV 13	4.12	-27137	-14699	5182.21		52816	1.835	16250	8349			0.57	No, Vu<V
SLV 7	2.22	-748	-2389	-2562.86		0	0	8333	0			0	No, Vu<V
SLV 7	4.12	-2761	-1924	-1361.63		7746	1.2731	9883	3523			1.83	Si
SLV 3	2.22	-5365	3540	1443.4		10441	1.835	10422	5355			1.51	Si
SLV 3	4.12	-2500	3507	-4435.35		0	0	8333	0			0	No, Vu<V
SLV 12	2.22	-2298	-7785	-6225.19		0	0	8333	0			0	No, Vu<V
SLV 12	4.12	-8498	-7200	1465.8		16540	1.835	11641	5981			0.83	No, Vu<V
SLV 15	2.22	-10531	-14445	-10764.37		0	0	8333	0			0	No, Vu<V
SLV 15	4.12	-21624	-14078	4989.4		42086	1.835	16250	8349			0.59	No, Vu<V
SLV 8	2.22	-748	-2389	-2562.86		0	0	8333	0			0	No, Vu<V
SLV 8	4.12	-2761	-1924	-1361.63		7746	1.2731	9883	3523			1.83	Si
SLV 16	2.22	-10531	-14445	-10764.37		0	0	8333	0			0	No, Vu<V
SLV 16	4.12	-21624	-14078	4989.4		42086	1.835	16250	8349			0.59	No, Vu<V

Verifica a pressoflessione fuori piano D.M. 17-01-18 (N.T.C.)

quota 3.16 Wa 0.05 denominatore 8 γM = 2

Comb.	fd	Sa	σ0	N	M	Mc	Coeff.s.	Verifica
SLV 7	143750	0.31	4179	-2147	165.69	290.3	1.75	Si
SLV 8	143750	0.31	4179	-2147	165.69	290.3	1.75	Si
SLV 4	143750	0.31	8599	-4418	165.69	575.02	3.47	Si
SLV 3	143750	0.31	8599	-4418	165.69	575.02	3.47	Si
SLV 12	143750	0.31	11279	-5795	165.69	736.41	4.44	Si
SLV 11	143750	0.31	11279	-5795	165.69	736.41	4.44	Si
SLV 1	143750	0.31	19488	-10013	165.69	1178.24	7.11	Si
SLV 2	143750	0.31	19488	-10013	165.69	1178.24	7.11	Si
SLV 15	143750	0.31	32266	-16578	165.69	1708.06	10.31	Si
SLV 16	143750	0.31	32266	-16578	165.69	1708.06	10.31	Si

Verifica dei meccanismi locali di collasso con analisi cinematica lineare

forza di aggancio al piano = 0 quota mezzeria = 3.16 Wa = 0.05 Ta = 0.0808

Comb.	N top	N base	V orto	α0	M*	e*	a0*	aLim	Verifica
SLV 7	-3714	923	-44	0	0	0	0	7.42296	No, Trazione
SLV 8	-3714	923	-44	0	0	0	0	7.42296	No, Trazione
SLV 16	-17040	-8113	-59	0.038	2001.3	0.96	0.58054	8.50261	No
SLV 15	-17040	-8113	-59	0.038	2001.3	0.96	0.58054	8.50261	No
SLV 2	-8845	-6852	61	0.038	1169.5	0.937	0.59639	8.50261	No
SLV 1	-8845	-6852	61	0.038	1169.5	0.937	0.59639	8.50261	No
SLV 13	-21443	-12636	-24	0.04	2449.4	0.967	0.59805	8.50261	No
SLV 14	-21443	-12636	-24	0.04	2449.4	0.967	0.59805	8.50261	No
SLV 5	-18392	-14153	71	0.038	2138.8	0.963	0.56944	7.42296	No
SLV 6	-18392	-14153	71	0.038	2138.8	0.963	0.56944	7.42296	No

Tabella dei coefficienti di sicurezza minimi

Stato limite	Coeff.s.	Comb.	Verifica
PF_SLU	1.275	SLU 83	Si
V_SLU	0.506	SLU 83	No
PF_SLV	0	SLV 3	No
V_SLV	0	SLV 3	No
PFFP_SLV	1.752	SLV 7	Si
R_SLV	0	SLV 8	No

Maschio 102

Verifiche condotte secondo D.M. 17-01-18 (N.T.C.)

Dati geometrici

X ini.	Y ini.	X fin.	Y fin.	Quota i.	Quota.s	l	Sp.	h netta	h ini.	h fin.	a	a.s.,sx	a.s.,dx
-2.958	5.948	-5.088	5.948	L3	L4	2.13	0.28	3.68	3.68	3.68			

Caratteristiche del materiale

(Circolare 7 21-01-19 C8.5.I) Muratura in mattoni pieni e malta di calce LC2_Corti

fb	fk	fvk0	fmedio	τ0	fv0	μ	ϕ	fv,lim	E	G	FC
600000			345000	9000	20000	0.58	0.77	32500	320000000	128000000	1.2

Verifica a pressoflessione nel piano secondo D.M. 17-01-18 NTC §7.8.2.2.1 in combinazioni non sismiche, γM = 3

Comb.	Quota	N	M	σ0	Mu	c.s.	Verifica
SLU 81	2.22	-23097	4628.03	38727	12903.71	2.788	Si
SLU 81	4.12	-26831	3437.72	44989	12793.5	3.722	Si
SLU 83	2.22	-23446	4566.41	39312	12919.3	2.829	Si
SLU 83	4.12	-27168	3570.89	45554	12753.46	3.572	Si
SLU 75	2.22	-22707	4448.74	38074	12879.99	2.895	Si
SLU 75	4.12	-26190	3505.95	43914	12855.88	3.667	Si
SLU 77	2.22	-23065	4397.49	38674	12902.03	2.934	Si
SLU 77	4.12	-26558	3616.1	44531	12822.28	3.546	Si
SLU 78	2.22	-23056	4387.12	38659	12901.54	2.941	Si
SLU 78	4.12	-26527	3639.13	44479	12825.31	3.524	Si
SLU 82	2.22	-23088	4617.67	38712	12903.22	2.794	Si
SLU 82	4.12	-26801	3460.75	44937	12796.9	3.698	Si
SLU 74	2.22	-22717	4459.1	38089	12880.63	2.889	Si
SLU 74	4.12	-26221	3482.92	43965	12853.3	3.69	Si
SLU 76	2.22	-22495	4389.8	37718	12864.25	2.93	Si
SLU 76	4.12	-25902	3491.06	43430	12878.09	3.689	Si
SLU 84	2.22	-23436	4556.05	39296	12918.95	2.836	Si
SLU 84	4.12	-27138	3593.92	45502	12757.32	3.55	Si

Comb.	Quota	N	M	σ0	Mu	c.s.	Verifica
SLU 73	2.22	-22146	4451.41	37133	12834.12	2.883	Si
SLU 73	4.12	-25565	3357.89	42865	12899.4	3.842	Si

Verifica a pressoflessione nel piano secondo D.M. 17-01-18 NTC §7.8.2.2.1 in combinazioni sismiche, γM = 2

Comb.	Quota	N	M	σ0	Mu	c.s.	Verifica
SLV 9	2.22	-3778	3430.81	6334	3814.58	1.112	Si
SLV 9	4.12	-6317	5852.04	10591	6144.12	1.05	Si
SLV 2	2.22	-4947	9729.8	0	0	0	No, e>l/2
SLV 2	4.12	-13572	-3176.78	22756	11761.93	3.702	Si
SLV 10	2.22	-3778	3430.81	6334	3814.58	1.112	Si
SLV 10	4.12	-6317	5852.04	10591	6144.12	1.05	Si
SLV 1	2.22	-4947	9729.8	0	0	0	No, e>l/2
SLV 1	4.12	-13572	-3176.78	22756	11761.93	3.702	Si
SLV 5	2.22	103	6993.62	0	0	0	No, Trazione
SLV 5	4.12	-5910	2231.7	9909	5783.27	2.591	Si
SLV 4	2.22	-13156	8512.3	22058	11481.45	1.349	Si
SLV 4	4.12	-20546	-4192.28	34450	15712.26	3.748	Si
SLV 3	2.22	-13156	8512.3	22058	11481.45	1.349	Si
SLV 3	4.12	-20546	-4192.28	34450	15712.26	3.748	Si
SLV 13	2.22	-17881	-2146.21	29982	14370.63	6.696	Si
SLV 13	4.12	-14929	8891.03	25031	12642	1.422	Si
SLV 14	2.22	-17881	-2146.21	29982	14370.63	6.696	Si
SLV 14	4.12	-14929	8891.03	25031	12642	1.422	Si
SLV 6	2.22	103	6993.62	0	0	0	No, Trazione
SLV 6	4.12	-5910	2231.7	9909	5783.27	2.591	Si

Verifica a taglio nel piano secondo D.M. 17-01-18 (N.T.C.) §7.8.2.2.2 con rottura per scorrimento in combinazioni non sismiche, γM = 3

Comb.	Quota	N	V par	M	σ0	σN	l'	fvd	Vt scorr.	Vt fess.diag.	Vt,lim	c.s.	Verifica
SLU 82	2.22	-23088	4474	4617.67		38712	2.13	10717	6392			1.43	Si
SLU 82	4.12	-26801	4439	3460.75		44937	2.13	10833	6461			1.46	Si
SLU 81	2.22	-23097	4504	4628.03		38727	2.13	10719	6393			1.42	Si
SLU 81	4.12	-26831	4470	3437.72		44989	2.13	10833	6461			1.45	Si
SLU 73	2.22	-22146	4265	4451.41		37133	2.13	10507	6266			1.47	Si
SLU 73	4.12	-25565	4231	3357.89		42865	2.13	10833	6461			1.53	Si
SLU 60	2.22	-20941	4148	4288.47		35112	2.13	10237	6105			1.47	Si
SLU 60	4.12	-24120	4117	3115.91		40443	2.13	10833	6461			1.57	Si
SLU 76	2.22	-22495	4157	4389.8		37718	2.13	10585	6313			1.52	Si
SLU 76	4.12	-25902	4123	3491.06		43430	2.13	10833	6461			1.57	Si
SLU 83	2.22	-23446	4396	4566.41		39312	2.13	10797	6439			1.46	Si
SLU 83	4.12	-27168	4361	3570.89		45554	2.13	10833	6461			1.48	Si
SLU 84	2.22	-23436	4366	4556.05		39296	2.13	10795	6438			1.47	Si
SLU 84	4.12	-27138	4331	3593.92		45502	2.13	10833	6461			1.49	Si
SLU 61	2.22	-20931	4118	4278.11		35096	2.13	10235	6104			1.48	Si
SLU 61	4.12	-24090	4086	3138.94		40392	2.13	10833	6461			1.58	Si
SLU 74	2.22	-22717	4256	4459.1		38089	2.13	10634	6342			1.49	Si
SLU 74	4.12	-26221	4222	3482.92		43965	2.13	10833	6461			1.53	Si
SLU 75	2.22	-22707	4225	4448.74		38074	2.13	10632	6341			1.5	Si
SLU 75	4.12	-26190	4191	3505.95		43914	2.13	10833	6461			1.54	Si

Verifica a taglio nel piano secondo D.M. 17-01-18 (N.T.C.) §7.8.2.2.2 con rottura per scorrimento in combinazioni sismiche, γM = 2

Comb.	Quota	N	V par	M	σ0	σN	l'	fvd	Vt scorr.	Vt fess.diag.	Vt,lim	c.s.	Verifica
SLV 13	2.22	-17881	-7083	-2146.21		29982	2.13	14330	8546			1.21	Si
SLV 13	4.12	-14929	-6731	8891.03		37859	1.4083	15905	6272			0.93	No, Vu<V
SLV 14	2.22	-17881	-7083	-2146.21		29982	2.13	14330	8546			1.21	Si
SLV 14	4.12	-14929	-6731	8891.03		37859	1.4083	15905	6272			0.93	No, Vu<V
SLV 1	2.22	-4947	10631	9729.8		0	0	8333	0			0	No, Vu<V
SLV 1	4.12	-13572	10776	-3176.78		22756	2.13	12884	7684			0.71	No, Vu<V
SLV 4	2.22	-13156	13140	8512.3		37471	1.2539	15828	5557			0.42	No, Vu<V
SLV 4	4.12	-20546	12741	-4192.28		34450	2.13	15223	9079			0.71	No, Vu<V
SLV 10	2.22	-3778	-3811	3430.81		28681	0.4704	14070	1853			0.49	No, Vu<V
SLV 10	4.12	-6317	-2897	5852.04		54274	0.4157	16250	1891			0.65	No, Vu<V
SLV 6	2.22	103	1503	6993.62		0	0	8333	0			0	No, Vu<V
SLV 6	4.12	-5910	2355	2231.7		10235	2.0621	10380	5993			2.54	Si
SLV 5	2.22	103	1503	6993.62		0	0	8333	0			0	No, Vu<V
SLV 5	4.12	-5910	2355	2231.7		10235	2.0621	10380	5993			2.54	Si
SLV 9	2.22	-3778	-3811	3430.81		28681	0.4704	14070	1853			0.49	No, Vu<V
SLV 9	4.12	-6317	-2897	5852.04		54274	0.4157	16250	1891			0.65	No, Vu<V
SLV 2	2.22	-4947	10631	9729.8		0	0	8333	0			0	No, Vu<V
SLV 2	4.12	-13572	10776	-3176.78		22756	2.13	12884	7684			0.71	No, Vu<V
SLV 3	2.22	-13156	13140	8512.3		37471	1.2539	15828	5557			0.42	No, Vu<V
SLV 3	4.12	-20546	12741	-4192.28		34450	2.13	15223	9079			0.71	No, Vu<V

Verifica a pressoflessione fuori piano D.M. 17-01-18 (N.T.C.)

quota 3.16 Wa 0.05 denominatore 8 γM = 2

Comb.	fd	Sa	σ0	N	M	Mc	Coeff.s.	Verifica
SLV 5	143750	0.31	5534	-3301	192.33	441.17	2.29	Si
SLV 6	143750	0.31	5534	-3301	192.33	441.17	2.29	Si
SLV 9	143750	0.31	8738	-5211	192.33	677.43	3.52	Si
SLV 10	143750	0.31	8738	-5211	192.33	677.43	3.52	Si
SLV 2	143750	0.31	16717	-9970	192.33	1204.85	6.26	Si
SLV 1	143750	0.31	16717	-9970	192.33	1204.85	6.26	Si
SLV 13	143750	0.31	27397	-16339	192.33	1774.61	9.23	Si
SLV 14	143750	0.31	27397	-16339	192.33	1774.61	9.23	Si
SLV 4	143750	0.31	29506	-17598	192.33	1868.72	9.72	Si
SLV 3	143750	0.31	29506	-17598	192.33	1868.72	9.72	Si

Verifica dei meccanismi locali di collasso con analisi cinematica lineare

forza di aggancio al piano = 0 quota mezzeria = 3.16 Wa = 0.05 Ta = 0.0808

Comb.	N top	N base	V orto	α0	M*	e*	a0*	aLim	Verifica

Comb.	N top	N base	V orto	α0	M*	e*	a0*	aLim	Verifica
SLV 5	-7412	891	89	0	0	0	0	7.42296	No, Trazione
SLV 6	-7412	891	89	0	0	0	0	7.42296	No, Trazione
SLV 15	-20890	-16926	-92	0.037	2436.1	0.962	0.56336	8.50261	No
SLV 16	-20890	-16926	-92	0.037	2436.1	0.962	0.56336	8.50261	No
SLV 1	-10769	-6506	72	0.038	1408.2	0.939	0.59238	8.50261	No
SLV 2	-10769	-6506	72	0.038	1408.2	0.939	0.59238	8.50261	No
SLV 13	-16341	-9645	-43	0.04	1973.5	0.954	0.6061	8.50261	No
SLV 14	-16341	-9645	-43	0.04	1973.5	0.954	0.6061	8.50261	No
SLV 4	-15318	-13787	23	0.041	1869.6	0.952	0.62668	8.50261	No
SLV 3	-15318	-13787	23	0.041	1869.6	0.952	0.62668	8.50261	No

Tabella dei coefficienti di sicurezza minimi

Stato limite	Coeff.s.	Comb.	Verifica
PF_SLU	2.788	SLU 81	Si
V_SLU	1.419	SLU 81	Si
PF_SLV	0	SLV 6	No
V_SLV	0	SLV 1	No
PFFP_SLV	2.294	SLV 5	Si
R_SLV	0	SLV 6	No

Maschio 103

Verifiche condotte secondo D.M. 17-01-18 (N.T.C.)

Dati geometrici

X ini.	Y ini.	X fin.	Y fin.	Quota i.	Quota.s	l	Sp.	h netta	h ini.	h fin.	a	a.s.,sx	a.s.,dx
-0.123	5.948	-1.958	5.948	L3	L4	1.835	0.28	3.68	3.68	3.68			

Caratteristiche del materiale

(Circolare 7 21-01-19 C8.5.I) Muratura in mattoni pieni e malta di calce LC2_Corti

fb	fk	fvk0	fmedio	τ0	fv0	μ	ϕ	fv,lim	E	G	FC
600000			345000	9000	20000	0.58	0.77	32500	320000000	128000000	1.2

Verifica a pressoflessione nel piano secondo D.M. 17-01-18 NTC §7.8.2.2.1 in combinazioni non sismiche, γM = 3

Comb.	Quota	N	M	σ0	Mu	c.s.	Verifica
SLU 79	2.22	-17097	-5268.39	33276	9278.53	1.761	Si
SLU 79	4.12	-21193	1716.94	41247	9598.48	5.59	Si
SLU 77	2.22	-17218	-5288.52	33510	9298.46	1.758	Si
SLU 77	4.12	-21338	1723.2	41531	9596.32	5.569	Si
SLU 81	2.22	-17002	-5069.72	33091	9262.38	1.827	Si
SLU 81	4.12	-20979	1661.33	40831	9599.98	5.778	Si
SLU 78	2.22	-17073	-5251.17	33229	9274.51	1.766	Si
SLU 78	4.12	-21226	1753.08	41312	9598.07	5.475	Si
SLU 75	2.22	-16719	-5062.44	32539	9211.88	1.82	Si
SLU 75	4.12	-20673	1667.61	40236	9598.63	5.756	Si
SLU 84	2.22	-17212	-5221.1	33499	9297.54	1.781	Si
SLU 84	4.12	-21419	1776.68	41688	9594.72	5.4	Si
SLU 76	2.22	-16502	-5017.41	32117	9170.83	1.828	Si
SLU 76	4.12	-20452	1681.27	39806	9595.11	5.707	Si
SLU 80	2.22	-16952	-5231.04	32994	9253.81	1.769	Si
SLU 80	4.12	-21080	1746.82	41028	9599.52	5.495	Si
SLU 83	2.22	-17356	-5258.45	33780	9320.61	1.773	Si
SLU 83	4.12	-21532	1746.8	41907	9592.01	5.491	Si
SLU 74	2.22	-16863	-5099.79	32821	9238.07	1.811	Si
SLU 74	4.12	-20786	1637.72	40455	9599.6	5.862	Si

Verifica a pressoflessione nel piano secondo D.M. 17-01-18 NTC §7.8.2.2.1 in combinazioni sismiche, γM = 2

Comb.	Quota	N	M	σ0	Mu	c.s.	Verifica
SLV 12	2.22	-21742	-9114.93	42317	13039.81	1.431	Si
SLV 12	4.12	-29367	2625.99	57157	14340.27	5.461	Si
SLV 5	2.22	-1447	2190.94	0	0	0	No, e>l/2
SLV 5	4.12	1384	-622.23	0	0	0	No, Trazione
SLV 16	2.22	-19603	-10738.25	38153	12369.7	1.152	Si
SLV 16	4.12	-29500	5194.64	57415	14347.84	2.762	Si
SLV 13	2.22	-14496	-8450.3	28214	10229.24	1.211	Si
SLV 13	4.12	-22429	4953.14	43654	13226.61	2.67	Si
SLV 2	2.22	-3586	3814.27	0	0	0	No, e>l/2
SLV 2	4.12	1517	-3190.88	0	0	0	No, Trazione
SLV 14	2.22	-14496	-8450.3	28214	10229.24	1.211	Si
SLV 14	4.12	-22429	4953.14	43654	13226.61	2.67	Si
SLV 6	2.22	-1447	2190.94	0	0	0	No, e>l/2
SLV 6	4.12	1384	-622.23	0	0	0	No, Trazione
SLV 1	2.22	-3586	3814.27	0	0	0	No, e>l/2
SLV 1	4.12	1517	-3190.88	0	0	0	No, Trazione
SLV 11	2.22	-21742	-9114.93	42317	13039.81	1.431	Si
SLV 11	4.12	-29367	2625.99	57157	14340.27	5.461	Si
SLV 15	2.22	-19603	-10738.25	38153	12369.7	1.152	Si
SLV 15	4.12	-29500	5194.64	57415	14347.84	2.762	Si

Verifica a taglio nel piano secondo D.M. 17-01-18 (N.T.C.) §7.8.2.2.2 con rottura per scorrimento in combinazioni non sismiche, γM = 3

Comb.	Quota	N	V par	M	σ0	σN	l'	fvd	Vt scorr.	Vt fess.diag.	Vt,lim	c.s.	Verifica
SLU 78	2.22	-17073	-6906	-5251.17		33324	1.8298	9999	5123			0.74	No, Vu<V
SLU 78	4.12	-21226	-6858	1753.08		41312	1.835	10833	5566			0.81	No, Vu<V
SLU 77	2.22	-17218	-6894	-5288.52		33583	1.831	10033	5144			0.75	No, Vu<V
SLU 77	4.12	-21338	-6847	1723.2		41531	1.835	10833	5566			0.81	No, Vu<V
SLU 80	2.22	-16952	-6880	-5231.04		33143	1.8268	9975	5102			0.74	No, Vu<V

Comb.	Quota	N	V par	M	σ0	σN	l'	fvd	Vt scorr.	Vt fess.diag.	Vt,lim	c.s.	Verifica
SLU 80	4.12	-21080	-6832	1746.82		41028	1.835	10833	5566			0.81	No, Vu<V
SLU 83	2.22	-17356	-6917	-5258.45		33780	1.835	10060	5169			0.75	No, Vu<V
SLU 83	4.12	-21532	-6870	1746.8		41907	1.835	10833	5566			0.81	No, Vu<V
SLU 84	2.22	-17212	-6929	-5221.1		33499	1.835	10022	5149			0.74	No, Vu<V
SLU 84	4.12	-21419	-6881	1776.68		41688	1.835	10833	5566			0.81	No, Vu<V
SLU 75	2.22	-16719	-6665	-5062.44		32539	1.835	9894	5084			0.76	No, Vu<V
SLU 75	4.12	-20673	-6618	1667.61		40236	1.835	10833	5566			0.84	No, Vu<V
SLU 74	2.22	-16863	-6653	-5099.79		32821	1.835	9932	5103			0.77	No, Vu<V
SLU 74	4.12	-20786	-6608	1637.72		40455	1.835	10833	5566			0.84	No, Vu<V
SLU 79	2.22	-17097	-6868	-5268.39		33402	1.828	10009	5123			0.75	No, Vu<V
SLU 79	4.12	-21193	-6821	1716.94		41247	1.835	10833	5566			0.82	No, Vu<V
SLU 76	2.22	-16502	-6647	-5017.41		32117	1.835	9838	5055			0.76	No, Vu<V
SLU 76	4.12	-20452	-6600	1681.27		39806	1.835	10833	5566			0.84	No, Vu<V
SLU 82	2.22	-16857	-6688	-5032.37		32810	1.835	9930	5102			0.76	No, Vu<V
SLU 82	4.12	-20866	-6641	1691.21		40612	1.835	10833	5566			0.84	No, Vu<V

Verifica a taglio nel piano secondo D.M. 17-01-18 (N.T.C.) §7.8.2.2.2 con rottura per scorrimento in combinazioni sismiche, γM = 2

Comb.	Quota	N	V par	M	σ0	σN	l'	fvd	Vt scorr.	Vt fess.diag.	Vt,lim	c.s.	Verifica
SLV 12	2.22	-21742	-14513	-9114.93		51947	1.4948	16250	6801			0.47	No, Vu<V
SLV 12	4.12	-29367	-11916	2625.99		57157	1.835	16250	8349			0.7	No, Vu<V
SLV 2	2.22	-3586	6380	3814.27		0	0	8333	0			0	No, Vu<V
SLV 2	4.12	1517	5598	-3190.88		0	0	8333	0			0	No, Vu<V
SLV 15	2.22	-19603	-15250	-10738.25		63122	1.1091	16250	5047			0.33	No, Vu<V
SLV 15	4.12	-29500	-14405	5194.64		57415	1.835	16250	8349			0.58	No, Vu<V
SLV 14	2.22	-14496	-10745	-8450.3		51581	1.0037	16250	4567			0.43	No, Vu<V
SLV 14	4.12	-22429	-11430	4953.14		43654	1.835	16250	8349			0.73	No, Vu<V
SLV 6	2.22	-1447	5642	2190.94		0	0	8333	0			0	No, Vu<V
SLV 6	4.12	1384	3109	-622.23		0	0	8333	0			0	No, Vu<V
SLV 16	2.22	-19603	-15250	-10738.25		63122	1.1091	16250	5047			0.33	No, Vu<V
SLV 16	4.12	-29500	-14405	5194.64		57415	1.835	16250	8349			0.58	No, Vu<V
SLV 11	2.22	-21742	-14513	-9114.93		51947	1.4948	16250	6801			0.47	No, Vu<V
SLV 11	4.12	-29367	-11916	2625.99		57157	1.835	16250	8349			0.7	No, Vu<V
SLV 13	2.22	-14496	-10745	-8450.3		51581	1.0037	16250	4567			0.43	No, Vu<V
SLV 13	4.12	-22429	-11430	4953.14		43654	1.835	16250	8349			0.73	No, Vu<V
SLV 1	2.22	-3586	6380	3814.27		0	0	8333	0			0	No, Vu<V
SLV 1	4.12	1517	5598	-3190.88		0	0	8333	0			0	No, Vu<V
SLV 5	2.22	-1447	5642	2190.94		0	0	8333	0			0	No, Vu<V
SLV 5	4.12	1384	3109	-622.23		0	0	8333	0			0	No, Vu<V

Verifica a pressoflessione fuori piano D.M. 17-01-18 (N.T.C.)

quota 3.16 Wa 0.05 denominatore 8 γM = 2

Comb.	fd	Sa	σ0	N	M	Mc	Coeff.s.	Verifica
SLV 2	143750	0.31	0	-602	165.69	0	0	No, e>t/2
SLV 6	143750	0.31	0	2466	165.69	0	0	No, Trazione
SLV 5	143750	0.31	0	2466	165.69	0	0	No, Trazione
SLV 1	143750	0.31	0	-602	165.69	0	0	No, e>t/2
SLV 9	143750	0.31	5073	-2606	165.69	349.76	2.11	Si
SLV 10	143750	0.31	5073	-2606	165.69	349.76	2.11	Si
SLV 3	143750	0.31	16162	-8304	165.69	1008.77	6.09	Si
SLV 4	143750	0.31	16162	-8304	165.69	1008.77	6.09	Si
SLV 14	143750	0.31	34079	-17510	165.69	1767.66	10.67	Si
SLV 13	143750	0.31	34079	-17510	165.69	1767.66	10.67	Si

Verifica dei meccanismi locali di collasso con analisi cinematica lineare

forza di aggancio al piano = 0 quota mezzeria = 3.16 Wa = 0.05 Ta = 0.0808

Comb.	N top	N base	V orto	α0	M*	e*	a0*	aLim	Verifica
SLV 6	-1147	3499	72	0	0	0	0	7.42296	No, Trazione
SLV 5	-1147	3499	72	0	0	0	0	7.42296	No, Trazione
SLV 13	-17099	-12757	34	0.04	2007.3	0.96	0.60061	8.50261	No
SLV 14	-17099	-12757	34	0.04	2007.3	0.96	0.60061	8.50261	No
SLV 15	-22213	-19639	-11	0.04	2527.7	0.968	0.60522	8.50261	No
SLV 16	-22213	-19639	-11	0.04	2527.7	0.968	0.60522	8.50261	No
SLV 7	-18192	-19440	-75	0.038	2118.5	0.962	0.56649	7.42296	No
SLV 8	-18192	-19440	-75	0.038	2118.5	0.962	0.56649	7.42296	No
SLV 11	-22801	-23237	-69	0.038	2587.6	0.969	0.56801	7.42296	No
SLV 12	-22801	-23237	-69	0.038	2587.6	0.969	0.56801	7.42296	No

Tabella dei coefficienti di sicurezza minimi

Stato limite	Coeff.s.	Comb.	Verifica
PF_SLU	1.758	SLU 77	Si
V_SLU	0.742	SLU 80	No
PF_SLV	0	SLV 6	No
V_SLV	0	SLV 1	No
PFFP_SLV	0	SLV 6	No
R_SLV	0	SLV 6	No

Maschio 104

Verifiche condotte secondo D.M. 17-01-18 (N.T.C.)

Dati geometrici

X ini.	Y ini.	X fin.	Y fin.	Quota i.	Quota.s	l	Sp.	h netta	h ini.	h fin.	a	a.s.,sx	a.s.,dx
-0.117	-3.169	-0.117	5.948	L3	L4	9.117	0.28	3.68	3.68	3.68			

Caratteristiche del materiale

(Circolare 7 21-01-19 C8.5.I) Muratura in mattoni pieni e malta di calce LC2_Corti

fb	fk	fvk0	fmedio	τ0	fv0	μ	ϕ	fv,lim	E	G	FC
600000			345000	9000	20000	0.58	0.77	32500	320000000	128000000	1.2

Verifica a pressoflessione nel piano secondo D.M. 17-01-18 NTC §7.8.2.2.1 in combinazioni non sismiche, γM = 3

Comb.	Quota	N	M	σ0	Mu	c.s.	Verifica
SLU 78	1.32	-211333	-41413.05	82783	0	0	No, Rottura per schiacciamento
SLU 78	5	-126940	-8100.95	49725	225432.87	27.828	Si
SLU 81	1.32	-212046	-44930.95	83062	0	0	No, Rottura per schiacciamento
SLU 81	5	-126834	-10711.15	49683	225539.93	21.057	Si
SLU 80	1.32	-209686	-40635.78	82138	0	0	No, Rottura per schiacciamento
SLU 80	5	-125775	-7753.31	49269	226576.01	29.223	Si
SLU 82	1.32	-211076	-46461.49	82683	0	0	No, Rottura per schiacciamento
SLU 82	5	-126190	-10822.62	49431	226175.89	20.898	Si
SLU 77	1.32	-212302	-39882.51	83163	0	0	No, Rottura per schiacciamento
SLU 77	5	-127584	-7989.48	49977	224775.74	28.134	Si
SLU 79	1.32	-210655	-39105.24	82518	0	0	No, Rottura per schiacciamento
SLU 79	5	-126419	-7641.84	49521	225951.75	29.568	Si
SLU 83	1.32	-215263	-43067.87	84323	0	0	No, Rottura per schiacciamento
SLU 83	5	-129041	-9489.56	50548	223220.8	23.523	Si
SLU 84	1.32	-214294	-44598.41	83943	0	0	No, Rottura per schiacciamento
SLU 84	5	-128397	-9601.03	50296	223919.06	23.322	Si
SLU 74	1.32	-209085	-41745.59	81902	0	0	No, Rottura per schiacciamento
SLU 74	5	-125376	-9211.07	49112	226953.83	24.639	Si
SLU 75	1.32	-208115	-43276.13	81523	0	0	No, Rottura per schiacciamento
SLU 75	5	-124733	-9322.54	48860	227548.67	24.408	Si

Verifica a pressoflessione nel piano secondo D.M. 17-01-18 NTC §7.8.2.2.1 in combinazioni sismiche, γM = 2

Comb.	Quota	N	M	σ0	Mu	c.s.	Verifica
SLV 8	1.32	-122133	122700.2	47842	338764.92	2.761	Si
SLV 8	5	-78166	62970.21	30619	267039.28	4.241	Si
SLV 1	1.32	-57566	-78650.03	22550	213991.96	2.721	Si
SLV 1	5	-41654	-38378.37	16317	164529.03	4.287	Si
SLV 2	1.32	-57566	-78650.03	22550	213991.96	2.721	Si
SLV 2	5	-41654	-38378.37	16317	164529.03	4.287	Si
SLV 7	1.32	-122133	122700.2	47842	338764.92	2.761	Si
SLV 7	5	-78166	62970.21	30619	267039.28	4.241	Si
SLV 5	1.32	-115065	-183946.78	45073	331045.7	1.8	Si
SLV 5	5	-68052	-82489.24	26657	242545.94	2.94	Si
SLV 11	1.32	-173538	124439.94	67978	350976.92	2.82	Si
SLV 11	5	-103828	68798.73	40671	315767.75	4.59	Si
SLV 12	1.32	-173538	124439.94	67978	350976.92	2.82	Si
SLV 12	5	-103828	68798.73	40671	315767.75	4.59	Si
SLV 6	1.32	-115065	-183946.78	45073	331045.7	1.8	Si
SLV 6	5	-68052	-82489.24	26657	242545.94	2.94	Si
SLV 9	1.32	-166470	-182207.04	65210	353877.71	1.942	Si
SLV 9	5	-93714	-76660.72	36710	298860.52	3.898	Si
SLV 10	1.32	-166470	-182207.04	65210	353877.71	1.942	Si
SLV 10	5	-93714	-76660.72	36710	298860.52	3.898	Si

Verifica a taglio nel piano secondo D.M. 17-01-18 (N.T.C.) §7.8.2.2.2 con rottura per scorrimento in combinazioni non sismiche, γM = 3

Comb.	Quota	N	V par	M	σ0	σN	I'	fvd	Vt scorr.	Vt fess.diag.	Vt,lim	c.s.	Verifica
SLU 76	1.32	-205822	-759	-43519.22		80624	9.1173	10833	27656			36.44	Si
SLU 76	5	-123139	-1384	-9049.21		48236	9.1173	10833	27656			19.98	Si
SLU 31	1.32	-168602	-907	-38485.12		66045	9.1173	10833	27656			30.48	Si
SLU 31	5	-100913	-1385	-8744.23		39529	9.1173	10826	27638			19.96	Si
SLU 44	1.32	-166321	-903	-36729.18		65151	9.1173	10833	27656			30.63	Si
SLU 44	5	-98468	-1368	-7872.34		38572	9.1173	10698	27312			19.96	Si
SLU 23	1.32	-150340	-972	-33586.18		58891	9.1173	10833	27656			28.46	Si
SLU 23	5	-89643	-1375	-7283.25		35115	9.1173	10238	26135			19.01	Si
SLU 2	1.32	-132319	-1037	-29832		51832	9.1173	10833	27656			26.66	Si
SLU 2	5	-78449	-1367	-6345.77		30730	9.1173	9653	24642			18.03	Si
SLU 13	1.32	-153799	-959	-32867.86		60246	9.1173	10833	27656			28.83	Si
SLU 13	5	-91926	-1375	-6585.16		36009	9.1173	10357	26439			19.23	Si
SLU 73	1.32	-202604	-773	-45382.3		79364	9.1173	10833	27656			35.79	Si
SLU 73	5	-120931	-1386	-10270.8		47371	9.1173	10833	27656			19.95	Si
SLU 26	1.32	-153558	-958	-31723.1		60152	9.1173	10833	27656			28.87	Si
SLU 26	5	-91851	-1373	-6061.66		35980	9.1173	10353	26429			19.25	Si
SLU 10	1.32	-150581	-973	-34730.94		58985	9.1173	10833	27656			28.42	Si
SLU 10	5	-89719	-1377	-7806.75		35145	9.1173	10241	26145			18.99	Si
SLU 5	1.32	-135537	-1024	-27968.92		53093	9.1173	10833	27656			27.02	Si
SLU 5	5	-80657	-1365	-5124.18		31595	9.1173	9768	24937			18.27	Si

Verifica a taglio nel piano secondo D.M. 17-01-18 (N.T.C.) §7.8.2.2.2 con rottura per scorrimento in combinazioni sismiche, γM = 2

Comb.	Quota	N	V par	M	σ0	σN	I'	fvd	Vt scorr.	Vt fess.diag.	Vt,lim	c.s.	Verifica
SLV 5	1.32	-115065	-23067	-183946.78		46277	8.8801	16250	40404			1.75	Si
SLV 5	5	-68052	-19350	-82489.24		26657	9.1173	13665	34884			1.8	Si
SLV 8	1.32	-122133	24080	122700.2		47842	9.1173	16250	41484			1.72	Si
SLV 8	5	-78166	18969	62970.21		30619	9.1173	14457	36907			1.95	Si
SLV 11	1.32	-173538	24189	124439.94		67978	9.1173	16250	41484			1.71	Si
SLV 11	5	-103828	19314	68798.73		40671	9.1173	16250	41484			2.15	Si
SLV 10	1.32	-166470	-22957	-182207.04		65210	9.1173	16250	41484			1.81	Si

Comb.	Quota	N	V par	M	σ0	σN	l'	fvd	Vt scorr.	Vt fess.diag.	Vt,lim	c.s.	Verifica
SLV 10	5	-93714	-19005	-76660.72		36710	9.1173	15675	40017			2.11	Si
SLV 4	1.32	-59686	7451	13344.07		23380	9.1173	13009	33211			4.46	Si
SLV 4	5	-44688	5156	5259.46		17505	9.1173	11834	30211			5.86	Si
SLV 6	1.32	-115065	-23067	-183946.78		46277	8.8801	16250	40404			1.75	Si
SLV 6	5	-68052	-19350	-82489.24		26657	9.1173	13665	34884			1.8	Si
SLV 12	1.32	-173538	24189	124439.94		67978	9.1173	16250	41484			1.71	Si
SLV 12	5	-103828	19314	68798.73		40671	9.1173	16250	41484			2.15	Si
SLV 3	1.32	-59686	7451	13344.07		23380	9.1173	13009	33211			4.46	Si
SLV 3	5	-44688	5156	5259.46		17505	9.1173	11834	30211			5.86	Si
SLV 9	1.32	-166470	-22957	-182207.04		65210	9.1173	16250	41484			1.81	Si
SLV 9	5	-93714	-19005	-76660.72		36710	9.1173	15675	40017			2.11	Si
SLV 7	1.32	-122133	24080	122700.2		47842	9.1173	16250	41484			1.72	Si
SLV 7	5	-78166	18969	62970.21		30619	9.1173	14457	36907			1.95	Si

Verifica a pressoflessione fuori piano D.M. 17-01-18 (N.T.C.)

quota 3.16 Wa 0.05 denominatore 8 γM = 2

Comb.	fd	Sa	σ0	N	M	Mc	Coeff.s.	Verifica
SLV 2	143750	0.31	19595	-50024	823.24	5880.24	7.14	Si
SLV 1	143750	0.31	19595	-50024	823.24	5880.24	7.14	Si
SLV 3	143750	0.31	20667	-52760	823.24	6137.05	7.45	Si
SLV 4	143750	0.31	20667	-52760	823.24	6137.05	7.45	Si
SLV 6	143750	0.31	34985	-89310	823.24	8923.48	10.84	Si
SLV 5	143750	0.31	34985	-89310	823.24	8923.48	10.84	Si
SLV 7	143750	0.31	38557	-98430	823.24	9431.78	11.46	Si
SLV 8	143750	0.31	38557	-98430	823.24	9431.78	11.46	Si
SLV 10	143750	0.31	49247	-125720	823.24	10506.9	12.76	Si
SLV 9	143750	0.31	49247	-125720	823.24	10506.9	12.76	Si

Verifica dei meccanismi locali di collasso con analisi cinematica lineare

forza di aggancio al piano = 0 quota mezzeria = 3.16 Wa = 0.05 Ta = 0.0808

Comb.	N top	N base	V orto	α0	M*	e*	a0*	aLim	Verifica
SLV 15	-130226	-231037	-50	0.04	14581.2	0.972	0.59796	8.50261	No
SLV 16	-130226	-231037	-50	0.04	14581.2	0.972	0.59796	8.50261	No
SLV 14	-127192	-228917	-7	0.04	14272.3	0.972	0.60371	8.50261	No
SLV 13	-127192	-228917	-7	0.04	14272.3	0.972	0.60371	8.50261	No
SLV 3	-44688	-59686	-9	0.044	5885.4	0.937	0.68097	8.50261	No
SLV 4	-44688	-59686	-9	0.044	5885.4	0.937	0.68097	8.50261	No
SLV 1	-41654	-57566	34	0.044	5578.6	0.934	0.6811	8.50261	No
SLV 2	-41654	-57566	34	0.044	5578.6	0.934	0.6811	8.50261	No
SLV 11	-103828	-173538	-86	0.04	11893.6	0.966	0.60368	7.42296	No
SLV 12	-103828	-173538	-86	0.04	11893.6	0.966	0.60368	7.42296	No

Tabella dei coefficienti di sicurezza minimi

Stato limite	Coeff.s.	Comb.	Verifica
PF_SLU	0	SLU 74	No
V_SLU	18.027	SLU 2	Si
PF_SLV	1.8	SLV 5	Si
V_SLV	1.715	SLV 11	Si
PFFP_SLV	7.143	SLV 1	Si
R_SLV	0.07	SLV 15	No

Maschio 105

Verifiche condotte secondo D.M. 17-01-18 (N.T.C.)

Dati geometrici

X ini.	Y ini.	X fin.	Y fin.	Quota i.	Quota.s	l	Sp.	h netta	h ini.	h fin.	a	a.s.,sx	a.s.,dx
-24.613	-3.183	-24.613	5.937	L4	L5	9.12	0.28	3.55	3.55	3.55			

Caratteristiche del materiale

(Circolare 7 21-01-19 C8.5.I) Muratura in mattoni pieni e malta di calce LC2_Corti

fb	fk	fvk0	fmedio	τ0	fv0	μ	ϕ	fv,lim	E	G	FC
600000			345000	9000	20000	0.58	0.77	32500	320000000	128000000	1.2

Verifica a pressoflessione nel piano secondo D.M. 17-01-18 NTC §7.8.2.2.1 in combinazioni non sismiche, γM = 3

Comb.	Quota	N	M	σ0	Mu	c.s.	Verifica
SLU 73	5	-131541	-17057.36	51512	220512.48	12.928	Si
SLU 73	8.55	-85175	-4718.2	33355	229360.39	48.612	Si
SLU 77	5	-138817	-15736.51	54361	210567.96	13.381	Si
SLU 77	8.55	-90597	-2629.93	35478	233192.09	88.668	Si
SLU 74	5	-136436	-17294.18	53429	214077.78	12.379	Si
SLU 74	8.55	-88627	-3916.81	34707	231949.05	59.219	Si
SLU 75	5	-135653	-16545.03	53122	215177.92	13.006	Si
SLU 75	8.55	-88331	-3823.81	34591	231747.22	60.606	Si
SLU 82	5	-136942	-18608.46	53627	213352.51	11.465	Si
SLU 82	8.55	-88426	-5229.52	34628	231812.26	44.328	Si
SLU 61	5	-125398	-16872.11	49106	227101.48	13.46	Si
SLU 61	8.55	-80952	-4700.42	31701	225482.21	47.971	Si
SLU 83	5	-140107	-17799.93	54866	208563.69	11.717	Si
SLU 83	8.55	-90692	-4035.64	35515	233247.69	57.797	Si
SLU 60	5	-126182	-17621.27	49413	226353.47	12.845	Si
SLU 60	8.55	-81248	-4793.42	31817	225779.96	47.102	Si
SLU 84	5	-139324	-17050.78	54560	209789.86	12.304	Si
SLU 84	8.55	-90396	-3942.65	35399	233072.7	59.116	Si
SLU 81	5	-137726	-19357.61	53934	212208.1	10.963	Si
SLU 81	8.55	-88722	-5322.52	34744	232012.85	43.591	Si

Verifica a pressoflessione nel piano secondo D.M. 17-01-18 NTC §7.8.2.2.1 in combinazioni sismiche, γM = 2

Comb.	Quota	N	M	σ0	Mu	c.s.	Verifica
SLV 10	5	-81392	-86911.21	31873	274331.23	3.156	Si
SLV 10	8.55	-53804	-41479.41	21070	203040.23	4.895	Si
SLV 7	5	-106904	61884.41	41864	320460.74	5.178	Si
SLV 7	8.55	-67822	35228.64	26559	242042.89	6.871	Si
SLV 5	5	-105059	-80090.38	41141	317761.89	3.968	Si
SLV 5	8.55	-64338	-37616.29	25195	232885.07	6.191	Si
SLV 8	5	-106904	61884.41	41864	320460.74	5.178	Si
SLV 8	8.55	-67822	35228.64	26559	242042.89	6.871	Si
SLV 14	5	-54427	-45177.67	21314	204894.7	4.535	Si
SLV 14	8.55	-42735	-20490.67	16735	168181.56	8.208	Si
SLV 12	5	-83238	55063.58	32596	278306.84	5.054	Si
SLV 12	8.55	-57288	31365.51	22434	213270.68	6.8	Si
SLV 11	5	-83238	55063.58	32596	278306.84	5.054	Si
SLV 11	8.55	-57288	31365.51	22434	213270.68	6.8	Si
SLV 6	5	-105059	-80090.38	41141	317761.89	3.968	Si
SLV 6	8.55	-64338	-37616.29	25195	232885.07	6.191	Si
SLV 13	5	-54427	-45177.67	21314	204894.7	4.535	Si
SLV 13	8.55	-42735	-20490.67	16735	168181.56	8.208	Si
SLV 9	5	-81392	-86911.21	31873	274331.23	3.156	Si
SLV 9	8.55	-53804	-41479.41	21070	203040.23	4.895	Si

Verifica a taglio nel piano secondo D.M. 17-01-18 (N.T.C.) §7.8.2.2.2 con rottura per scorrimento in combinazioni non sismiche, γM = 3

Comb.	Quota	N	V par	M	σ0	σN	l'	fvd	Vt scorr.	Vt fess.diag.	Vt,lim	c.s.	Verifica
SLU 55	5	-122378	-1371	-13763.34		47924	9.12	10833	27664			20.17	Si
SLU 55	8.55	-79671	-943	-2902.22		31200	9.12	9715	24809			26.31	Si
SLU 31	5	-109220	-1375	-14257.82		42771	9.12	10833	27664			20.12	Si
SLU 31	8.55	-70745	-947	-4097.2		27704	9.12	9249	23619			24.94	Si
SLU 34	5	-111601	-1374	-12700.14		43704	9.12	10833	27664			20.13	Si
SLU 34	8.55	-72715	-946	-2810.33		28475	9.12	9352	23882			25.24	Si
SLU 5	5	-88673	-1352	-8509.93		34725	9.12	10186	26010			19.23	Si
SLU 5	8.55	-58118	-924	-1232.8		22759	9.12	8590	21936			23.75	Si
SLU 2	5	-86292	-1353	-10067.6		33792	9.12	10061	25692			18.98	Si
SLU 2	8.55	-56148	-925	-2519.67		21988	9.12	8487	21673			23.44	Si
SLU 10	5	-97676	-1365	-12521.48		38250	9.12	10656	27210			19.93	Si
SLU 10	8.55	-63271	-937	-3568.1		24777	9.12	8859	22623			24.15	Si
SLU 23	5	-97836	-1364	-11803.94		38313	9.12	10664	27231			19.97	Si
SLU 23	8.55	-63622	-935	-3048.77		24915	9.12	8878	22670			24.24	Si
SLU 76	5	-133922	-1382	-15499.68		52445	9.12	10833	27664			20.02	Si
SLU 76	8.55	-87145	-953	-3431.32		34126	9.12	10106	25806			27.07	Si
SLU 52	5	-119997	-1372	-15321.02		46991	9.12	10833	27664			20.16	Si
SLU 52	8.55	-77701	-944	-4189.1		30428	9.12	9613	24547			26	Si
SLU 73	5	-131541	-1383	-17057.36		51512	9.12	10833	27664			20.01	Si
SLU 73	8.55	-85175	-954	-4718.2		33355	9.12	10003	25543			26.76	Si

Verifica a taglio nel piano secondo D.M. 17-01-18 (N.T.C.) §7.8.2.2.2 con rottura per scorrimento in combinazioni sismiche, γM = 2

Comb.	Quota	N	V par	M	σ0	σN	l'	fvd	Vt scorr.	Vt fess.diag.	Vt,lim	c.s.	Verifica
SLV 6	5	-105059	-19019	-80090.38		41141	9.12	16250	41496			2.18	Si
SLV 6	8.55	-64338	-18022	-37616.29		25195	9.12	13372	34148			1.89	Si
SLV 8	5	-106904	19778	61884.41		41864	9.12	16250	41496			2.1	Si
SLV 8	8.55	-67822	18684	35228.64		26559	9.12	13645	34844			1.86	Si
SLV 10	5	-81392	-19863	-86911.21		31873	9.12	14708	37558			1.89	Si
SLV 10	8.55	-53804	-18769	-41479.41		21070	9.12	12547	32041			1.71	Si
SLV 11	5	-83238	18934	55063.58		32596	9.12	14853	37928			2	Si
SLV 11	8.55	-57288	17937	31365.51		22434	9.12	12820	32738			1.83	Si
SLV 12	5	-83238	18934	55063.58		32596	9.12	14853	37928			2	Si
SLV 12	8.55	-57288	17937	31365.51		22434	9.12	12820	32738			1.83	Si
SLV 7	5	-106904	19778	61884.41		41864	9.12	16250	41496			2.1	Si
SLV 7	8.55	-67822	18684	35228.64		26559	9.12	13645	34844			1.86	Si
SLV 13	5	-54427	-7268	-45177.67		21314	9.12	12596	32165			4.43	Si
SLV 13	8.55	-42735	-6793	-20490.67		16735	9.12	11680	29827			4.39	Si
SLV 14	5	-54427	-7268	-45177.67		21314	9.12	12596	32165			4.43	Si
SLV 14	8.55	-42735	-6793	-20490.67		16735	9.12	11680	29827			4.39	Si
SLV 5	5	-105059	-19019	-80090.38		41141	9.12	16250	41496			2.18	Si
SLV 5	8.55	-64338	-18022	-37616.29		25195	9.12	13372	34148			1.89	Si
SLV 9	5	-81392	-19863	-86911.21		31873	9.12	14708	37558			1.89	Si
SLV 9	8.55	-53804	-18769	-41479.41		21070	9.12	12547	32041			1.71	Si

Verifica a pressoflessione fuori piano D.M. 17-01-18 (N.T.C.)

quota 6.775 Wa 0.05 denominatore 8 γM = 2

Comb.	fd	Sa	σ0	N	M	Mc	Coeff.s.	Verifica
SLV 14	143750	0.39	18970	-48443	952.34	5729.05	6.02	Si
SLV 13	143750	0.39	18970	-48443	952.34	5729.05	6.02	Si
SLV 16	143750	0.39	19311	-49312	952.34	5812.59	6.1	Si
SLV 15	143750	0.39	19311	-49312	952.34	5812.59	6.1	Si
SLV 10	143750	0.39	26142	-66755	952.34	7346.23	7.71	Si
SLV 9	143750	0.39	26142	-66755	952.34	7346.23	7.71	Si
SLV 12	143750	0.39	27276	-69652	952.34	7574.47	7.95	Si
SLV 11	143750	0.39	27276	-69652	952.34	7574.47	7.95	Si
SLV 6	143750	0.39	32629	-83320	952.34	8549.89	8.98	Si
SLV 5	143750	0.39	32629	-83320	952.34	8549.89	8.98	Si

Verifica dei meccanismi locali di collasso con analisi cinematica lineare

forza di aggancio al piano = 0 quota mezzeria = 6.775 Wa = 0.05 Ta = 0.0752

Comb.	N top	N base	V orto	α0	M*	e*	a0*	aLim	Verifica
SLV 4	-78891	-133869	125	0.042	9309.8	0.959	0.63177	9.20386	No
SLV 3	-78891	-133869	125	0.042	9309.8	0.959	0.63177	9.20386	No
SLV 1	-77846	-133316	111	0.042	9203.6	0.959	0.63483	9.20386	No

Comb.	N top	N base	V orto	α0	M*	e*	a0*	aLim	Verifica
SLV 2	-77846	-133316	111	0.042	9203.6	0.959	0.63483	9.20386	No
SLV 14	-42735	-54427	-119	0.043	5640	0.937	0.67354	9.20386	No
SLV 13	-42735	-54427	-119	0.043	5640	0.937	0.67354	9.20386	No
SLV 16	-43780	-54981	-105	0.044	5745.8	0.938	0.67562	9.20386	No
SLV 15	-43780	-54981	-105	0.044	5745.8	0.938	0.67562	9.20386	No
SLV 8	-67822	-106904	60	0.043	8184.6	0.954	0.6531	8.10374	No
SLV 7	-67822	-106904	60	0.043	8184.6	0.954	0.6531	8.10374	No

Tabella dei coefficienti di sicurezza minimi

Stato limite	Coeff.s.	Comb.	Verifica
PF_SLU	10.963	SLU 81	Si
V_SLU	18.983	SLU 2	Si
PF_SLV	3.156	SLV 9	Si
V_SLV	1.707	SLV 9	Si
PFFP_SLV	6.016	SLV 13	Si
R_SLV	0.069	SLV 3	No

Maschio 106

Verifiche condotte secondo D.M. 17-01-18 (N.T.C.)

Dati geometrici

X ini.	Y ini.	X fin.	Y fin.	Quota i.	Quota.s	l	Sp.	h netta	h ini.	h fin.	a	a.s.,sx	a.s.,dx
-22.878	5.937	-24.613	5.937	L4	L5	1.735	0.28	3.55	3.55	3.55			

Caratteristiche del materiale

(Circolare 7 21-01-19 C8.5.I) Muratura in mattoni pieni e malta di calce LC2_Corti

fb	fk	fvk0	fmedio	τ0	fv0	μ	ϕ	fv,lim	E	G	FC
600000			345000	9000	20000	0.58	0.77	32500	320000000	128000000	1.2

Verifica a pressoflessione nel piano secondo D.M. 17-01-18 NTC §7.8.2.2.1 in combinazioni non sismiche, γM = 3

Comb.	Quota	N	M	σ0	Mu	c.s.	Verifica
SLU 82	5.9	-18658	-420.15	38407	8554.47	20.361	Si
SLU 82	7.8	-18318	-1311.73	37707	8535.11	6.507	Si
SLU 77	5.9	-19444	-453.78	40025	8579.82	18.908	Si
SLU 77	7.8	-18862	-1290.04	38827	8563.66	6.638	Si
SLU 81	5.9	-18765	-428.03	38628	8559.53	19.997	Si
SLU 81	7.8	-18358	-1304.78	37789	8537.66	6.543	Si
SLU 75	5.9	-18794	-438.64	38686	8560.78	19.517	Si
SLU 75	7.8	-18295	-1268.8	37660	8533.64	6.726	Si
SLU 76	5.9	-18561	-422.85	38207	8549.46	20.219	Si
SLU 76	7.8	-18100	-1261.02	37258	8520.03	6.756	Si
SLU 78	5.9	-19337	-445.89	39804	8577.95	19.238	Si
SLU 78	7.8	-18822	-1296.98	38745	8562.01	6.601	Si
SLU 83	5.9	-19309	-435.28	39746	8577.38	19.705	Si
SLU 83	7.8	-18885	-1332.97	38874	8564.57	6.425	Si
SLU 84	5.9	-19201	-427.4	39525	8574.88	20.063	Si
SLU 84	7.8	-18845	-1339.91	38791	8562.95	6.391	Si
SLU 80	5.9	-19176	-435.36	39473	8574.21	19.695	Si
SLU 80	7.8	-18654	-1284.58	38398	8554.25	6.659	Si
SLU 79	5.9	-19283	-443.25	39694	8576.83	19.35	Si
SLU 79	7.8	-18694	-1277.64	38480	8556.21	6.697	Si

Verifica a pressoflessione nel piano secondo D.M. 17-01-18 NTC §7.8.2.2.1 in combinazioni sismiche, γM = 2

Comb.	Quota	N	M	σ0	Mu	c.s.	Verifica
SLV 9	5.9	-4069	-750.91	8377	3288.2	4.379	Si
SLV 9	7.8	-3613	868.19	7438	2943.8	3.391	Si
SLV 14	5.9	-7572	-3385.93	15586	5730.76	1.693	Si
SLV 14	7.8	-2584	2973.22	0	0	0	No, e>l/2
SLV 15	5.9	-12400	-3711.94	25526	8510.16	2.293	Si
SLV 15	7.8	-6427	2616.74	13229	4971.64	1.9	Si
SLV 3	5.9	-18489	2729.96	38058	11043.26	4.045	Si
SLV 3	7.8	-22175	-4585.87	45647	12050.56	2.628	Si
SLV 16	5.9	-12400	-3711.94	25526	8510.16	2.293	Si
SLV 16	7.8	-6427	2616.74	13229	4971.64	1.9	Si
SLV 1	5.9	-13660	3055.98	28118	9123.08	2.985	Si
SLV 1	7.8	-18333	-4229.39	37737	10991.96	2.599	Si
SLV 4	5.9	-18489	2729.96	38058	11043.26	4.045	Si
SLV 4	7.8	-22175	-4585.87	45647	12050.56	2.628	Si
SLV 2	5.9	-13660	3055.98	28118	9123.08	2.985	Si
SLV 2	7.8	-18333	-4229.39	37737	10991.96	2.599	Si
SLV 13	5.9	-7572	-3385.93	15586	5730.76	1.693	Si
SLV 13	7.8	-2584	2973.22	0	0	0	No, e>l/2
SLV 10	5.9	-4069	-750.91	8377	3288.2	4.379	Si
SLV 10	7.8	-3613	868.19	7438	2943.8	3.391	Si

Verifica a taglio nel piano secondo D.M. 17-01-18 (N.T.C.) §7.8.2.2.2 con rottura per scorrimento in combinazioni non sismiche, γM = 3

Comb.	Quota	N	V par	M	σ0	σN	l'	fvd	Vt scorr.	Vt fess.diag.	Vt,lim	c.s.	Verifica
SLU 40	5.9	-15498	1191	-326.73		31901	1.735	9809	4765			4	Si
SLU 40	7.8	-15486	1185	-1162.36		31877	1.735	9806	4764			4.02	Si
SLU 73	5.9	-18018	1203	-415.6		37088	1.735	10501	5101			4.24	Si
SLU 73	7.8	-17573	1194	-1232.84		36173	1.735	10379	5042			4.22	Si
SLU 41	5.9	-16148	1154	-341.86		33240	1.735	9988	4852			4.21	Si
SLU 41	7.8	-16053	1152	-1183.6		33045	1.735	9962	4839			4.2	Si
SLU 84	5.9	-19201	1292	-427.4		39525	1.735	10826	5259			4.07	Si
SLU 84	7.8	-18845	1286	-1339.91		38791	1.735	10728	5212			4.05	Si

Comb.	Quota	N	V par	M	σ0	σN	l'	fvd	Vt scorr.	Vt fess.diag.	Vt,lim	c.s.	Verifica
SLU 31	5.9	-14857	1106	-322.18		30583	1.735	9633	4680			4.23	Si
SLU 31	7.8	-14741	1097	-1083.47		30344	1.735	9601	4664			4.25	Si
SLU 81	5.9	-18765	1248	-428.03		38628	1.735	10706	5201			4.17	Si
SLU 81	7.8	-18358	1246	-1304.78		37789	1.735	10594	5147			4.13	Si
SLU 82	5.9	-18658	1288	-420.15		38407	1.735	10676	5187			4.03	Si
SLU 82	7.8	-18318	1282	-1311.73		37707	1.735	10583	5141			4.01	Si
SLU 83	5.9	-19309	1251	-435.28		39746	1.735	10833	5263			4.21	Si
SLU 83	7.8	-18885	1249	-1332.97		38874	1.735	10739	5217			4.18	Si
SLU 39	5.9	-15605	1150	-334.61		32122	1.735	9838	4780			4.16	Si
SLU 39	7.8	-15526	1149	-1155.41		31960	1.735	9817	4769			4.15	Si
SLU 42	5.9	-16041	1194	-333.98		33019	1.735	9958	4838			4.05	Si
SLU 42	7.8	-16013	1189	-1190.54		32962	1.735	9951	4834			4.07	Si

Verifica a taglio nel piano secondo D.M. 17-01-18 (N.T.C.) §7.8.2.2.2 con rottura per scorrimento in combinazioni sismiche, γM = 2

Comb.	Quota	N	V par	M	σ0	σN	l'	fvd	Vt scorr.	Vt fess.diag.	Vt,lim	c.s.	Verifica
SLV 13	5.9	-7572	-5930	-3385.93		21445	1.261	12622	4457			0.75	No, Vu<V
SLV 13	7.8	-2584	-5076	2973.22		0	0	8333	0			0	No, Vu<V
SLV 14	5.9	-7572	-5930	-3385.93		21445	1.261	12622	4457			0.75	No, Vu<V
SLV 14	7.8	-2584	-5076	2973.22		0	0	8333	0			0	No, Vu<V
SLV 15	5.9	-12400	-4779	-3711.94		25983	1.7045	13530	6457			1.35	Si
SLV 15	7.8	-6427	-4333	2616.74		16620	1.381	11657	4508			1.04	Si
SLV 1	5.9	-13660	6179	3055.98		28118	1.735	13957	6780			1.1	Si
SLV 1	7.8	-18333	5730	-4229.39		37737	1.735	15881	7715			1.35	Si
SLV 3	5.9	-18489	7330	2729.96		38058	1.735	15945	7746			1.06	Si
SLV 3	7.8	-22175	6473	-4585.87		45647	1.735	16250	7894			1.22	Si
SLV 16	5.9	-12400	-4779	-3711.94		25983	1.7045	13530	6457			1.35	Si
SLV 16	7.8	-6427	-4333	2616.74		16620	1.381	11657	4508			1.04	Si
SLV 2	5.9	-13660	6179	3055.98		28118	1.735	13957	6780			1.1	Si
SLV 2	7.8	-18333	5730	-4229.39		37737	1.735	15881	7715			1.35	Si
SLV 9	5.9	-4069	-3035	-750.91		8377	1.735	10009	4862			1.6	Si
SLV 9	7.8	-3613	-2160	868.19		7438	1.735	9821	4771			2.21	Si
SLV 10	5.9	-4069	-3035	-750.91		8377	1.735	10009	4862			1.6	Si
SLV 10	7.8	-3613	-2160	868.19		7438	1.735	9821	4771			2.21	Si
SLV 4	5.9	-18489	7330	2729.96		38058	1.735	15945	7746			1.06	Si
SLV 4	7.8	-22175	6473	-4585.87		45647	1.735	16250	7894			1.22	Si

Verifica a pressoflessione fuori piano D.M. 17-01-18 (N.T.C.)

quota 6.775 Wa 0.05 denominatore 8 γM = 2

Comb.	fd	Sa	σ0	N	M	Mc	Coeff.s.	Verifica
SLV 9	143750	0.39	8879	-4313	181.18	559.98	3.09	Si
SLV 10	143750	0.39	8879	-4313	181.18	559.98	3.09	Si
SLV 14	143750	0.39	11444	-5559	181.18	705.41	3.89	Si
SLV 13	143750	0.39	11444	-5559	181.18	705.41	3.89	Si
SLV 6	143750	0.39	15502	-7531	181.18	920.55	5.08	Si
SLV 5	143750	0.39	15502	-7531	181.18	920.55	5.08	Si
SLV 15	143750	0.39	20265	-9845	181.18	1149.69	6.35	Si
SLV 16	143750	0.39	20265	-9845	181.18	1149.69	6.35	Si
SLV 2	143750	0.39	33520	-16284	181.18	1654.37	9.13	Si
SLV 1	143750	0.39	33520	-16284	181.18	1654.37	9.13	Si

Verifica dei meccanismi locali di collasso con analisi cinematica lineare

forza di aggancio al piano = 0 quota mezzeria = 6.775 Wa = 0.05 Ta = 0.0752

Comb.	N top	N base	V orto	α0	M*	e*	a0*	aLim	Verifica
SLV 16	-6706	-7792	-91	0.036	929.1	0.929	0.56034	9.20386	No
SLV 15	-6706	-7792	-91	0.036	929.1	0.929	0.56034	9.20386	No
SLV 1	-13663	-16760	90	0.038	1634.3	0.956	0.57024	9.20386	No
SLV 2	-13663	-16760	90	0.038	1634.3	0.956	0.57024	9.20386	No
SLV 5	-7053	-7431	121	0.032	964.1	0.931	0.50678	8.10374	No
SLV 6	-7053	-7431	121	0.032	964.1	0.931	0.50678	8.10374	No
SLV 11	-13316	-17121	-122	0.035	1599.1	0.955	0.53792	8.10374	No
SLV 12	-13316	-17121	-122	0.035	1599.1	0.955	0.53792	8.10374	No
SLV 4	-16416	-20842	28	0.041	1914.3	0.962	0.62348	9.20386	No
SLV 3	-16416	-20842	28	0.041	1914.3	0.962	0.62348	9.20386	No

Tabella dei coefficienti di sicurezza minimi

Stato limite	Coeff.s.	Comb.	Verifica
PF_SLU	6.391	SLU 84	Si
V_SLU	4.001	SLU 40	Si
PF_SLV	0	SLV 13	No
V_SLV	0	SLV 13	No
PFFP_SLV	3.091	SLV 9	Si
R_SLV	0.061	SLV 15	No

Maschio 107

Verifiche condotte secondo D.M. 17-01-18 (N.T.C.)

Dati geometrici

X ini.	Y ini.	X fin.	Y fin.	Quota i.	Quota.s	l	Sp.	h netta	h ini.	h fin.	a	a.s.,sx	a.s.,dx
-19.663	5.937	-21.878	5.937	L4	L5	2.215	0.28	3.55	3.55	3.55			

Caratteristiche del materiale

(Circolare 7 21-01-19 C8.5.I) Muratura in mattoni pieni e malta di calce LC2_Corti

fb	fk	fvk0	fmedio	τ0	fv0	μ	ϕ	fv,lim	E	G	FC
600000			345000	9000	20000	0.58	0.77	32500	320000000	128000000	1.2

Verifica a pressoflessione nel piano secondo D.M. 17-01-18 NTC §7.8.2.2.1 in combinazioni non sismiche, γM = 3

Comb.	Quota	N	M	σ0	Mu	c.s.	Verifica
SLU 75	5.9	-24691	713.46	39816	13977.47	19.591	Si
SLU 75	7.8	-22015	1274.97	35501	13754.06	10.788	Si
SLU 79	5.9	-25124	759.07	40515	13984.11	18.423	Si
SLU 79	7.8	-22425	1305.03	36162	13808.62	10.581	Si
SLU 82	5.9	-24651	666.74	39752	13976.45	20.962	Si
SLU 82	7.8	-22056	1319.05	35567	13759.88	10.432	Si
SLU 78	5.9	-25351	757.72	40880	13984.31	18.456	Si
SLU 78	7.8	-22635	1287.87	36500	13833.75	10.742	Si
SLU 77	5.9	-25397	761.39	40955	13984.07	18.366	Si
SLU 77	7.8	-22691	1303.97	36591	13840.11	10.614	Si
SLU 74	5.9	-24737	717.13	39891	13978.57	19.492	Si
SLU 74	7.8	-22071	1291.07	35591	13761.95	10.659	Si
SLU 83	5.9	-25357	714.67	40890	13984.28	19.567	Si
SLU 83	7.8	-22732	1348.05	36657	13844.71	10.27	Si
SLU 80	5.9	-25078	755.39	40440	13983.8	18.512	Si
SLU 80	7.8	-22369	1288.93	36071	13801.6	10.708	Si
SLU 81	5.9	-24697	670.41	39826	13977.63	20.849	Si
SLU 81	7.8	-22112	1335.15	35658	13767.67	10.312	Si
SLU 84	5.9	-25311	711	40816	13984.44	19.669	Si
SLU 84	7.8	-22676	1331.95	36567	13838.45	10.39	Si

Verifica a pressoflessione nel piano secondo D.M. 17-01-18 NTC §7.8.2.2.1 in combinazioni sismiche, γM = 2

Comb.	Quota	N	M	σ0	Mu	c.s.	Verifica
SLV 4	5.9	-28039	5207.64	45215	19559.69	3.756	Si
SLV 4	7.8	-18180	-3224	29316	15301.42	4.746	Si
SLV 15	5.9	-10910	-3540.17	17593	10341.66	2.921	Si
SLV 15	7.8	-16014	5278.15	25823	13985.22	2.65	Si
SLV 16	5.9	-10910	-3540.17	17593	10341.66	2.921	Si
SLV 16	7.8	-16014	5278.15	25823	13985.22	2.65	Si
SLV 2	5.9	-22724	4562.44	36645	17617.27	3.861	Si
SLV 2	7.8	-13515	-3487.1	21794	12296.72	3.526	Si
SLV 9	5.9	-5390	-1876.37	8692	5544.11	2.955	Si
SLV 9	7.8	-6665	1732.35	10748	6731.61	3.886	Si
SLV 1	5.9	-22724	4562.44	36645	17617.27	3.861	Si
SLV 1	7.8	-13515	-3487.1	21794	12296.72	3.526	Si
SLV 14	5.9	-5595	-4185.37	9023	5738.39	1.371	Si
SLV 14	7.8	-11349	5015.05	18301	10685.19	2.131	Si
SLV 10	5.9	-5390	-1876.37	8692	5544.11	2.955	Si
SLV 10	7.8	-6665	1732.35	10748	6731.61	3.886	Si
SLV 3	5.9	-28039	5207.64	45215	19559.69	3.756	Si
SLV 3	7.8	-18180	-3224	29316	15301.42	4.746	Si
SLV 13	5.9	-5595	-4185.37	9023	5738.39	1.371	Si
SLV 13	7.8	-11349	5015.05	18301	10685.19	2.131	Si

Verifica a taglio nel piano secondo D.M. 17-01-18 (N.T.C.) §7.8.2.2.2 con rottura per scorrimento in combinazioni non sismiche, γM = 3

Comb.	Quota	N	V par	M	σ0	σN	l'	fvd	Vt scorr.	Vt fess.diag.	Vt,lim	c.s.	Verifica
SLU 83	5.9	-25357	-340	714.67		40890	2.2147	10833	6718			19.76	Si
SLU 83	7.8	-22732	-396	1348.05		36657	2.2147	10443	6476			16.35	Si
SLU 84	5.9	-25311	-328	711		40816	2.2147	10833	6718			20.45	Si
SLU 84	7.8	-22676	-382	1331.95		36567	2.2147	10431	6469			16.95	Si
SLU 42	5.9	-21396	-315	567.04		34502	2.2147	10156	6298			19.97	Si
SLU 42	7.8	-19380	-360	1124.02		31251	2.2147	9722	6029			16.75	Si
SLU 18	5.9	-18562	-299	504.5		29933	2.2147	9547	5920			19.77	Si
SLU 18	7.8	-16605	-341	1011.63		26777	2.2147	9126	5659			16.59	Si
SLU 39	5.9	-20782	-368	526.45		33513	2.2147	10024	6216			16.91	Si
SLU 39	7.8	-18816	-414	1127.21		30342	2.2147	9601	5954			14.37	Si
SLU 81	5.9	-24697	-381	670.41		39826	2.2147	10833	6718			17.65	Si
SLU 81	7.8	-22112	-436	1335.15		35658	2.2147	10310	6393			14.66	Si
SLU 41	5.9	-21442	-327	570.71		34576	2.2147	10166	6304			19.29	Si
SLU 41	7.8	-19435	-374	1140.12		31341	2.2147	9734	6037			16.13	Si
SLU 82	5.9	-24651	-369	666.74		39752	2.2147	10833	6718			18.2	Si
SLU 82	7.8	-22056	-422	1319.05		35567	2.2147	10298	6386			15.15	Si
SLU 60	5.9	-22477	-313	648.46		36246	2.2147	10388	6442			20.61	Si
SLU 60	7.8	-19902	-363	1219.57		32093	2.2147	9835	6099			16.81	Si
SLU 40	5.9	-20736	-356	522.78		33438	2.2147	10014	6210			17.44	Si
SLU 40	7.8	-18760	-400	1111.11		30251	2.2147	9589	5946			14.87	Si

Verifica a taglio nel piano secondo D.M. 17-01-18 (N.T.C.) §7.8.2.2.2 con rottura per scorrimento in combinazioni sismiche, γM = 2

Comb.	Quota	N	V par	M	σ0	σN	l'	fvd	Vt scorr.	Vt fess.diag.	Vt,lim	c.s.	Verifica
SLV 9	5.9	-5390	-6981	-1876.37		8692	2.2147	10072	6246			0.89	No, Vu<V
SLV 9	7.8	-6665	-6409	1732.35		10748	2.2147	10483	6501			1.01	Si
SLV 2	5.9	-22724	8033	4562.44		36645	2.2147	15662	9713			1.21	Si
SLV 2	7.8	-13515	7536	-3487.1		21794	2.2147	12692	7871			1.04	Si
SLV 10	5.9	-5390	-6981	-1876.37		8692	2.2147	10072	6246			0.89	No, Vu<V
SLV 10	7.8	-6665	-6409	1732.35		10748	2.2147	10483	6501			1.01	Si
SLV 1	5.9	-22724	8033	4562.44		36645	2.2147	15662	9713			1.21	Si
SLV 1	7.8	-13515	7536	-3487.1		21794	2.2147	12692	7871			1.04	Si
SLV 15	5.9	-10910	-8387	-3540.17		17593	2.2147	11852	7350			0.88	No, Vu<V
SLV 15	7.8	-16014	-7964	5278.15		25823	2.2147	13498	8370			1.05	Si
SLV 16	5.9	-10910	-8387	-3540.17		17593	2.2147	11852	7350			0.88	No, Vu<V
SLV 16	7.8	-16014	-7964	5278.15		25823	2.2147	13498	8370			1.05	Si
SLV 14	5.9	-5595	-10776	-4185.37		18537	1.078	12041	3634			0.34	No, Vu<V
SLV 14	7.8	-11349	-10094	5015.05		20302	1.9964	12394	6928			0.69	No, Vu<V
SLV 3	5.9	-28039	10423	5207.64		45215	2.2147	16250	10077			0.97	No, Vu<V
SLV 3	7.8	-18180	9666	-3224		29316	2.2147	14197	8804			0.91	No, Vu<V
SLV 4	5.9	-28039	10423	5207.64		45215	2.2147	16250	10077			0.97	No, Vu<V
SLV 4	7.8	-18180	9666	-3224		29316	2.2147	14197	8804			0.91	No, Vu<V
SLV 13	5.9	-5595	-10776	-4185.37		18537	1.078	12041	3634			0.34	No, Vu<V

Comb.	Quota	N	V par	M	σ0	σN	l'	fvd	Vt scorr.	Vt fess.diag.	Vt,lim	c.s.	Verifica
SLV 13	7.8	-11349	-10094	5015.05		20302	1.9964	12394	6928			0.69	No, Vu<V

Verifica a pressoflessione fuori piano D.M. 17-01-18 (N.T.C.)

quota 6.775 Wa 0.05 denominatore 8 γM = 2

Comb.	fd	Sa	σ0	N	M	Mc	Coeff.s.	Verifica
SLV 9	143750	0.39	10892	-6754	231.27	861.33	3.72	Si
SLV 10	143750	0.39	10892	-6754	231.27	861.33	3.72	Si
SLV 13	143750	0.39	14692	-9111	231.27	1122.18	4.85	Si
SLV 14	143750	0.39	14692	-9111	231.27	1122.18	4.85	Si
SLV 6	143750	0.39	15311	-9495	231.27	1162.7	5.03	Si
SLV 5	143750	0.39	15311	-9495	231.27	1162.7	5.03	Si
SLV 15	143750	0.39	22369	-13871	231.27	1586.48	6.86	Si
SLV 16	143750	0.39	22369	-13871	231.27	1586.48	6.86	Si
SLV 1	143750	0.39	29422	-18246	231.27	1939.29	8.39	Si
SLV 2	143750	0.39	29422	-18246	231.27	1939.29	8.39	Si

Verifica dei meccanismi locali di collasso con analisi cinematica lineare

forza di aggancio al piano = 0 quota mezzeria = 6.775 Wa = 0.05 Ta = 0.0752

Comb.	N top	N base	V orto	α0	M*	e*	a0*	aLim	Verifica
SLV 2	-12666	-17181	32	0.043	1601.4	0.945	0.65468	9.20386	No
SLV 1	-12666	-17181	32	0.043	1601.4	0.945	0.65468	9.20386	No
SLV 16	-11856	-14939	-31	0.043	1519.3	0.942	0.66054	9.20386	No
SLV 15	-11856	-14939	-31	0.043	1519.3	0.942	0.66054	9.20386	No
SLV 3	-15962	-22023	3	0.044	1935.9	0.953	0.66495	9.20386	No
SLV 4	-15962	-22023	3	0.044	1935.9	0.953	0.66495	9.20386	No
SLV 11	-17137	-23067	-53	0.041	2055.4	0.956	0.61956	8.10374	No
SLV 12	-17137	-23067	-53	0.041	2055.4	0.956	0.61956	8.10374	No
SLV 7	-18369	-25192	-43	0.041	2180.6	0.958	0.6246	8.10374	No
SLV 8	-18369	-25192	-43	0.041	2180.6	0.958	0.6246	8.10374	No

Tabella dei coefficienti di sicurezza minimi

Stato limite	Coeff.s.	Comb.	Verifica
PF_SLU	10.27	SLU 83	Si
V_SLU	14.372	SLU 39	Si
PF_SLV	1.371	SLV 13	Si
V_SLV	0.337	SLV 13	No
PFFP_SLV	3.724	SLV 9	Si
R_SLV	0.071	SLV 1	No

Maschio 108

Verifiche condotte secondo D.M. 17-01-18 (N.T.C.)

Dati geometrici

X ini.	Y ini.	X fin.	Y fin.	Quota i.	Quota.s	l	Sp.	h netta	h ini.	h fin.	a	a.s.,sx	a.s.,dx
-22.517	-3.183	-24.613	-3.183	L4	L5	2.095	0.28	3.55	3.55	3.55			

Caratteristiche del materiale

(Circolare 7 21-01-19 C8.5.I) Muratura in mattoni pieni e malta di calce LC2_Corti

fb	fk	fvk0	fmedio	τ0	fv0	μ	ϕ	fv,lim	E	G	FC
600000			345000	9000	20000	0.58	0.77	32500	320000000	128000000	1.2

Verifica a pressoflessione nel piano secondo D.M. 17-01-18 NTC §7.8.2.2.1 in combinazioni non sismiche, γM = 3

Comb.	Quota	N	M	σ0	Mu	c.s.	Verifica
SLU 74	5.9	-21409	1681.95	36491	12381.52	7.361	Si
SLU 74	7.8	-21528	-1548.08	36694	12394.21	8.006	Si
SLU 73	5.9	-21876	1296.21	37288	12427.69	9.588	Si
SLU 73	7.8	-21491	-1599.55	36631	12390.35	7.746	Si
SLU 83	5.9	-21875	1760.45	37285	12427.53	7.059	Si
SLU 83	7.8	-22152	-1628.42	37758	12450.45	7.646	Si
SLU 84	5.9	-22443	1524.34	38253	12470.8	8.181	Si
SLU 84	7.8	-22393	-1651.8	38168	12467.54	7.548	Si
SLU 60	5.9	-19943	1595.61	33992	12174.56	7.63	Si
SLU 60	7.8	-19987	-1472.16	34068	12182.24	8.275	Si
SLU 77	5.9	-21615	1657.78	36843	12403.1	7.482	Si
SLU 77	7.8	-21661	-1507.19	36921	12407.61	8.232	Si
SLU 39	5.9	-18089	1539.23	30833	11778.06	7.652	Si
SLU 39	7.8	-18657	-1465.21	31801	11915.61	8.132	Si
SLU 82	5.9	-22236	1548.5	37901	12456.72	8.044	Si
SLU 82	7.8	-22260	-1692.69	37941	12458.41	7.36	Si
SLU 79	5.9	-21342	1641.4	36377	12374.16	7.539	Si
SLU 79	7.8	-21356	-1478.81	36401	12375.72	8.369	Si
SLU 81	5.9	-21668	1784.61	36933	12408.31	6.953	Si
SLU 81	7.8	-22019	-1669.31	37532	12439.91	7.452	Si

Verifica a pressoflessione nel piano secondo D.M. 17-01-18 NTC §7.8.2.2.1 in combinazioni sismiche, γM = 2

Comb.	Quota	N	M	σ0	Mu	c.s.	Verifica
SLV 8	5.9	-7580	2748.26	12921	7101.9	2.584	Si
SLV 8	7.8	-10797	-2090.75	18403	9607.55	4.595	Si
SLV 2	5.9	-18987	4999.99	32363	14623.16	2.925	Si
SLV 2	7.8	-22554	-5361.26	38443	16194.65	3.021	Si
SLV 7	5.9	-7580	2748.26	12921	7101.9	2.584	Si
SLV 7	7.8	-10797	-2090.75	18403	9607.55	4.595	Si
SLV 15	5.9	-10787	-2697.59	18385	9600.19	3.559	Si
SLV 15	7.8	-6904	3292.35	11768	6536.71	1.985	Si

Comb.	Quota	N	M	σ0	Mu	c.s.	Verifica
SLV 4	5.9	-14288	5243.53	24354	11985.38	2.286	Si
SLV 4	7.8	-19097	-5228.19	32551	14677.26	2.807	Si
SLV 13	5.9	-15485	-2941.13	26395	12718.87	4.324	Si
SLV 13	7.8	-10361	3159.28	17660	9286.05	2.939	Si
SLV 16	5.9	-10787	-2697.59	18385	9600.19	3.559	Si
SLV 16	7.8	-6904	3292.35	11768	6536.71	1.985	Si
SLV 14	5.9	-15485	-2941.13	26395	12718.87	4.324	Si
SLV 14	7.8	-10361	3159.28	17660	9286.05	2.939	Si
SLV 3	5.9	-14288	5243.53	24354	11985.38	2.286	Si
SLV 3	7.8	-19097	-5228.19	32551	14677.26	2.807	Si
SLV 1	5.9	-18987	4999.99	32363	14623.16	2.925	Si
SLV 1	7.8	-22554	-5361.26	38443	16194.65	3.021	Si

Verifica a taglio nel piano secondo D.M. 17-01-18 (N.T.C.) §7.8.2.2.2 con rottura per scorrimento in combinazioni non sismiche, γM = 3

Comb.	Quota	N	V par	M	σ0	σN	I'	fvd	Vt scorr.	Vt fess.diag.	Vt,lim	c.s.	Verifica
SLU 62	5.9	-20149	2983	1571.45		34344	2.0953	10135	5946			1.99	Si
SLU 62	7.8	-20120	2981	-1431.27		34294	2.0953	10128	5942			1.99	Si
SLU 74	5.9	-21409	3203	1681.95		36491	2.0953	10421	6114			1.91	Si
SLU 74	7.8	-21528	3201	-1548.08		36694	2.0953	10448	6130			1.91	Si
SLU 77	5.9	-21615	3128	1657.78		36843	2.0953	10468	6141			1.96	Si
SLU 77	7.8	-21661	3126	-1507.19		36921	2.0953	10478	6147			1.97	Si
SLU 41	5.9	-18296	2934	1515.07		31185	2.0953	9714	5699			1.94	Si
SLU 41	7.8	-18790	2933	-1424.32		32028	2.0953	9826	5765			1.97	Si
SLU 82	5.9	-22236	3176	1548.5		37901	2.0953	10609	6224			1.96	Si
SLU 82	7.8	-22260	3138	-1692.69		37941	2.0953	10614	6227			1.98	Si
SLU 81	5.9	-21668	3449	1784.61		36933	2.0953	10480	6148			1.78	Si
SLU 81	7.8	-22019	3447	-1669.31		37532	2.0953	10560	6195			1.8	Si
SLU 83	5.9	-21875	3374	1760.45		37285	2.0953	10527	6176			1.83	Si
SLU 83	7.8	-22152	3372	-1628.42		37758	2.0953	10590	6213			1.84	Si
SLU 60	5.9	-19943	3058	1595.61		33992	2.0953	10088	5918			1.94	Si
SLU 60	7.8	-19987	3056	-1472.16		34068	2.0953	10098	5924			1.94	Si
SLU 79	5.9	-21342	3087	1641.4		36377	2.0953	10406	6105			1.98	Si
SLU 79	7.8	-21356	3085	-1478.81		36401	2.0953	10409	6107			1.98	Si
SLU 39	5.9	-18089	3009	1539.23		30833	2.0953	9667	5671			1.88	Si
SLU 39	7.8	-18657	3008	-1465.21		31801	2.0953	9796	5747			1.91	Si

Verifica a taglio nel piano secondo D.M. 17-01-18 (N.T.C.) §7.8.2.2.2 con rottura per scorrimento in combinazioni sismiche, γM = 2

Comb.	Quota	N	V par	M	σ0	σN	I'	fvd	Vt scorr.	Vt fess.diag.	Vt,lim	c.s.	Verifica
SLV 7	5.9	-7580	6782	2748.26		13172	2.0553	10968	6312			0.93	No, Vu<V
SLV 7	7.8	-10797	6582	-2090.75		18403	2.0953	12014	7048			1.07	Si
SLV 8	5.9	-7580	6782	2748.26		13172	2.0553	10968	6312			0.93	No, Vu<V
SLV 8	7.8	-10797	6582	-2090.75		18403	2.0953	12014	7048			1.07	Si
SLV 13	5.9	-15485	-5731	-2941.13		26395	2.0953	13612	7986			1.39	Si
SLV 13	7.8	-10361	-5078	3159.28		17660	2.0953	11865	6961			1.37	Si
SLV 4	5.9	-14288	10061	5243.53		24989	2.042	13331	7622			0.76	No, Vu<V
SLV 4	7.8	-19097	9405	-5228.19		32551	2.0953	14843	8708			0.93	No, Vu<V
SLV 16	5.9	-10787	-4249	-2697.59		18385	2.0953	12010	7046			1.66	Si
SLV 16	7.8	-6904	-3597	3292.35		14400	1.7124	11213	5377			1.49	Si
SLV 2	5.9	-18987	8579	4999.99		32363	2.0953	14806	8686			1.01	Si
SLV 2	7.8	-22554	7924	-5361.26		38443	2.0953	16022	9400			1.19	Si
SLV 3	5.9	-14288	10061	5243.53		24989	2.042	13331	7622			0.76	No, Vu<V
SLV 3	7.8	-19097	9405	-5228.19		32551	2.0953	14843	8708			0.93	No, Vu<V
SLV 14	5.9	-15485	-5731	-2941.13		26395	2.0953	13612	7986			1.39	Si
SLV 14	7.8	-10361	-5078	3159.28		17660	2.0953	11865	6961			1.37	Si
SLV 15	5.9	-10787	-4249	-2697.59		18385	2.0953	12010	7046			1.66	Si
SLV 15	7.8	-6904	-3597	3292.35		14400	1.7124	11213	5377			1.49	Si
SLV 1	5.9	-18987	8579	4999.99		32363	2.0953	14806	8686			1.01	Si
SLV 1	7.8	-22554	7924	-5361.26		38443	2.0953	16022	9400			1.19	Si

Verifica a pressoflessione fuori piano D.M. 17-01-18 (N.T.C.)

quota 6.775 Wa 0.05 denominatore 8 γM = 2

Comb.	fd	Sa	σ0	N	M	Mc	Coeff.s.	Verifica
SLV 12	143750	0.39	12346	-7243	218.8	911.62	4.17	Si
SLV 11	143750	0.39	12346	-7243	218.8	911.62	4.17	Si
SLV 16	143750	0.39	15546	-9121	218.8	1114.42	5.09	Si
SLV 15	143750	0.39	15546	-9121	218.8	1114.42	5.09	Si
SLV 8	143750	0.39	16522	-9693	218.8	1173.53	5.36	Si
SLV 7	143750	0.39	16522	-9693	218.8	1173.53	5.36	Si
SLV 13	143750	0.39	22464	-13179	218.8	1505.86	6.88	Si
SLV 14	143750	0.39	22464	-13179	218.8	1505.86	6.88	Si
SLV 4	143750	0.39	29463	-17286	218.8	1836.46	8.39	Si
SLV 3	143750	0.39	29463	-17286	218.8	1836.46	8.39	Si

Verifica dei meccanismi locali di collasso con analisi cinematica lineare

forza di aggancio al piano = 0 quota mezzeria = 6.775 Wa = 0.05 Ta = 0.0752

Comb.	N top	N base	V orto	α0	M*	e*	a0*	aLim	Verifica
SLV 13	-10179	-12106	198	0.029	1332.3	0.938	0.45155	9.20386	No
SLV 14	-10179	-12106	198	0.029	1332.3	0.938	0.45155	9.20386	No
SLV 4	-14515	-17623	-200	0.032	1772.1	0.952	0.48484	9.20386	No
SLV 3	-14515	-17623	-200	0.032	1772.1	0.952	0.48484	9.20386	No
SLV 8	-8890	-8729	-181	0.03	1201.9	0.933	0.4598	8.10374	No
SLV 7	-8890	-8729	-181	0.03	1201.9	0.933	0.4598	8.10374	No
SLV 15	-7471	-7515	119	0.035	1058.8	0.926	0.54389	9.20386	No
SLV 16	-7471	-7515	119	0.035	1058.8	0.926	0.54389	9.20386	No
SLV 2	-17224	-22214	-121	0.037	2047.3	0.958	0.56133	9.20386	No
SLV 1	-17224	-22214	-121	0.037	2047.3	0.958	0.56133	9.20386	No

Tabella dei coefficienti di sicurezza minimi

Stato limite	Coeff.s.	Comb.	Verifica

Stato limite	Coeff.s.	Comb.	Verifica
PF_SLU	6.953	SLU 81	Si
V_SLU	1.783	SLU 81	Si
PF_SLV	1.985	SLV 15	Si
V_SLV	0.758	SLV 3	No
PFFP_SLV	4.166	SLV 11	Si
R_SLV	0.049	SLV 13	No

Maschio 109

Verifiche condotte secondo D.M. 17-01-18 (N.T.C.)

Dati geometrici

X ini.	Y ini.	X fin.	Y fin.	Quota i.	Quota.s	l	Sp.	h netta	h ini.	h fin.	a	a.s.,sx	a.s.,dx
-19.287	-3.183	-21.517	-3.183	L4	L5	2.23	0.28	3.55	3.55	3.55			

Caratteristiche del materiale

(Circolare 7 21-01-19 C8.5.I) Muratura in mattoni pieni e malta di calce LC2_Corti

fb	fk	fvk0	fmedio	τ0	fv0	μ	ϕ	fv,lim	E	G	FC
600000			345000	9000	20000	0.58	0.77	32500	320000000	128000000	1.2

Verifica a pressoflessione nel piano secondo D.M. 17-01-18 NTC §7.8.2.2.1 in combinazioni non sismiche, γM = 3

Comb.	Quota	N	M	σ0	Mu	c.s.	Verifica
SLU 77	7	-19227	-1543.66	30792	13334.03	8.638	Si
SLU 77	7.8	-18180	-288.21	29116	13025.31	45.193	Si
SLU 83	7	-19607	-1579.63	31401	13434.22	8.505	Si
SLU 83	7.8	-18560	-334.8	29725	13142.94	39.256	Si
SLU 81	7	-19499	-1573.87	31228	13406.49	8.518	Si
SLU 81	7.8	-18452	-376.48	29552	13110.27	34.824	Si
SLU 74	7	-19119	-1537.9	30620	13304.5	8.651	Si
SLU 74	7.8	-18073	-329.89	28944	12990.85	39.379	Si
SLU 56	7	-17466	-1408.23	27972	12786.97	9.08	Si
SLU 56	7.8	-16432	-255.76	26316	12402.55	48.492	Si
SLU 62	7	-17846	-1444.2	28580	12916.5	8.944	Si
SLU 62	7.8	-16812	-302.35	26925	12549.3	41.506	Si
SLU 53	7	-17358	-1402.47	27800	12749.14	9.09	Si
SLU 53	7.8	-16324	-297.44	26144	12359.84	41.554	Si
SLU 79	7	-18902	-1519.73	30273	13243.48	8.714	Si
SLU 79	7.8	-17856	-268.52	28597	12919.88	48.116	Si
SLU 60	7	-17738	-1438.44	28408	12880.46	8.954	Si
SLU 60	7.8	-16704	-344.03	26753	12508.38	36.359	Si
SLU 58	7	-17141	-1384.3	27452	12671.38	9.154	Si
SLU 58	7.8	-16108	-236.07	25797	12272.26	51.986	Si

Verifica a pressoflessione nel piano secondo D.M. 17-01-18 NTC §7.8.2.2.1 in combinazioni sismiche, γM = 2

Comb.	Quota	N	M	σ0	Mu	c.s.	Verifica
SLV 15	7	-12480	-2955.55	19987	11639.12	3.938	Si
SLV 15	7.8	-11687	5879.68	18717	11034.81	1.877	Si
SLV 14	7	-15683	-2698.68	25116	13891.77	5.148	Si
SLV 14	7.8	-14832	5882.29	23755	13322.95	2.265	Si
SLV 8	7	-7431	-953.2	11901	7478.82	7.846	Si
SLV 8	7.8	-6730	-2075.16	10778	6841.87	3.297	Si
SLV 2	7	-13663	842.91	21882	12506.1	14.837	Si
SLV 2	7.8	-12852	-6351.22	20583	11915.98	1.876	Si
SLV 7	7	-7431	-953.2	11901	7478.82	7.846	Si
SLV 7	7.8	-6730	-2075.16	10778	6841.87	3.297	Si
SLV 13	7	-15683	-2698.68	25116	13891.77	5.148	Si
SLV 13	7.8	-14832	5882.29	23755	13322.95	2.265	Si
SLV 16	7	-12480	-2955.55	19987	11639.12	3.938	Si
SLV 16	7.8	-11687	5879.68	18717	11034.81	1.877	Si
SLV 1	7	-13663	842.91	21882	12506.1	14.837	Si
SLV 1	7.8	-12852	-6351.22	20583	11915.98	1.876	Si
SLV 4	7	-10461	586.04	16753	10064.42	17.174	Si
SLV 4	7.8	-9706	-6353.83	15545	9445.75	1.487	Si
SLV 3	7	-10461	586.04	16753	10064.42	17.174	Si
SLV 3	7.8	-9706	-6353.83	15545	9445.75	1.487	Si

Verifica a taglio nel piano secondo D.M. 17-01-18 (N.T.C.) §7.8.2.2.2 con rottura per scorrimento in combinazioni non sismiche, γM = 3

Comb.	Quota	N	V par	M	σ0	σN	l'	fvd	Vt scorr.	Vt fess.diag.	Vt,lim	c.s.	Verifica
SLU 74	7	-19119	-1494	-1537.9		30620	2.23	9638	6018			4.03	Si
SLU 74	7.8	-18073	-1494	-329.89		28944	2.23	9415	5879			3.93	Si
SLU 71	7	-17008	-1429	-1366.53		27239	2.23	9187	5737			4.02	Si
SLU 71	7.8	-15961	-1429	-211.09		25563	2.23	8964	5597			3.92	Si
SLU 56	7	-17466	-1423	-1408.23		27972	2.23	9285	5798			4.07	Si
SLU 56	7.8	-16432	-1423	-255.76		26316	2.23	9064	5660			3.98	Si
SLU 81	7	-19499	-1481	-1573.87		31228	2.23	9719	6069			4.1	Si
SLU 81	7.8	-18452	-1481	-376.48		29552	2.23	9496	5929			4	Si
SLU 77	7	-19227	-1554	-1543.66		30792	2.23	9661	6032			3.88	Si
SLU 77	7.8	-18180	-1554	-288.21		29116	2.23	9438	5893			3.79	Si
SLU 58	7	-17141	-1418	-1384.3		27452	2.23	9216	5754			4.06	Si
SLU 58	7.8	-16108	-1418	-236.07		25797	2.23	8995	5617			3.96	Si
SLU 62	7	-17846	-1410	-1444.2		28580	2.23	9366	5848			4.15	Si
SLU 62	7.8	-16812	-1410	-302.35		26925	2.23	9146	5710			4.05	Si
SLU 83	7	-19607	-1540	-1579.63		31401	2.23	9742	6083			3.95	Si
SLU 83	7.8	-18560	-1540	-334.8		29725	2.23	9519	5944			3.86	Si
SLU 69	7	-17332	-1434	-1390.46		27758	2.23	9257	5780			4.03	Si
SLU 69	7.8	-16286	-1434	-230.79		26082	2.23	9033	5640			3.93	Si
SLU 79	7	-18902	-1548	-1519.73		30273	2.23	9592	5989			3.87	Si

Comb.	Quota	N	V par	M	σ0	σN	l'	fvd	Vt scorr.	Vt fess.diag.	Vt,lim	c.s.	Verifica
SLU 79	7.8	-17856	-1548	-268.52		28597	2.23	9368	5850			3.78	Si

Verifica a taglio nel piano secondo D.M. 17-01-18 (N.T.C.) §7.8.2.2.2 con rottura per scorrimento in combinazioni sismiche, γM = 2

Comb.	Quota	N	V par	M	σ0	σN	l'	fvd	Vt scorr.	Vt fess.diag.	Vt,lim	c.s.	Verifica
SLV 3	7	-10461	8718	586.04		16753	2.23	11684	7295			0.84	No, Vu<V
SLV 3	7.8	-9706	8506	-6353.83		25098	1.3812	13353	5164			0.61	No, Vu<V
SLV 4	7	-10461	8718	586.04		16753	2.23	11684	7295			0.84	No, Vu<V
SLV 4	7.8	-9706	8506	-6353.83		25098	1.3812	13353	5164			0.61	No, Vu<V
SLV 11	7	-8037	-4777	-2015.68		12872	2.23	10908	6811			1.43	Si
SLV 11	7.8	-7324	-4764	1594.89		11730	2.23	10679	6668			1.4	Si
SLV 2	7	-13663	9183	842.91		21882	2.23	12710	7936			0.86	No, Vu<V
SLV 2	7.8	-12852	8998	-6351.22		24645	1.8624	13262	6916			0.77	No, Vu<V
SLV 13	7	-15683	-10745	-2698.68		25116	2.23	13357	8340			0.78	No, Vu<V
SLV 13	7.8	-14832	-10532	5882.29		24579	2.1553	13249	7995			0.76	No, Vu<V
SLV 15	7	-12480	-11209	-2955.55		19987	2.23	12331	7699			0.69	No, Vu<V
SLV 15	7.8	-11687	-11025	5879.68		22737	1.8357	12881	6621			0.6	No, Vu<V
SLV 14	7	-15683	-10745	-2698.68		25116	2.23	13357	8340			0.78	No, Vu<V
SLV 14	7.8	-14832	-10532	5882.29		24579	2.1553	13249	7995			0.76	No, Vu<V
SLV 16	7	-12480	-11209	-2955.55		19987	2.23	12331	7699			0.69	No, Vu<V
SLV 16	7.8	-11687	-11025	5879.68		22737	1.8357	12881	6621			0.6	No, Vu<V
SLV 12	7	-8037	-4777	-2015.68		12872	2.23	10908	6811			1.43	Si
SLV 12	7.8	-7324	-4764	1594.89		11730	2.23	10679	6668			1.4	Si
SLV 1	7	-13663	9183	842.91		21882	2.23	12710	7936			0.86	No, Vu<V
SLV 1	7.8	-12852	8998	-6351.22		24645	1.8624	13262	6916			0.77	No, Vu<V

Verifica a pressoflessione fuori piano D.M. 17-01-18 (N.T.C.)

quota 6.775 Wa 0.05 denominatore 8 γM = 2

Comb.	fd	Sa	σ0	N	M	Mc	Coeff.s.	Verifica
SLV 11	143750	0.39	11194	-6989	232.86	888.87	3.82	Si
SLV 12	143750	0.39	11194	-6989	232.86	888.87	3.82	Si
SLV 7	143750	0.39	11684	-7296	232.86	923.73	3.97	Si
SLV 8	143750	0.39	11684	-7296	232.86	923.73	3.97	Si
SLV 15	143750	0.39	16563	-10342	232.86	1251.6	5.37	Si
SLV 16	143750	0.39	16563	-10342	232.86	1251.6	5.37	Si
SLV 3	143750	0.39	18198	-11363	232.86	1353.9	5.81	Si
SLV 4	143750	0.39	18198	-11363	232.86	1353.9	5.81	Si
SLV 13	143750	0.39	21656	-13522	232.86	1557.54	6.69	Si
SLV 14	143750	0.39	21656	-13522	232.86	1557.54	6.69	Si

Verifica dei meccanismi locali di collasso con analisi cinematica lineare

forza di aggancio al piano = 0 quota mezzeria = 6.775 Wa = 0.05 Ta = 0.0752

Comb.	N top	N base	V orto	α0	M*	e*	a0*	aLim	Verifica
SLV 16	-8528	-7077	-105	0.037	1185	0.929	0.57756	9.20386	No
SLV 15	-8528	-7077	-105	0.037	1185	0.929	0.57756	9.20386	No
SLV 2	-10844	-13727	103	0.038	1419	0.938	0.58089	9.20386	No
SLV 1	-10844	-13727	103	0.038	1419	0.938	0.58089	9.20386	No
SLV 14	-10575	-10456	-91	0.038	1391.8	0.937	0.59608	9.20386	No
SLV 13	-10575	-10456	-91	0.038	1391.8	0.937	0.59608	9.20386	No
SLV 4	-8797	-10348	89	0.038	1212.1	0.93	0.60105	9.20386	No
SLV 3	-8797	-10348	89	0.038	1212.1	0.93	0.60105	9.20386	No
SLV 5	-13138	-16524	52	0.041	1651.4	0.946	0.63311	8.10374	No
SLV 6	-13138	-16524	52	0.041	1651.4	0.946	0.63311	8.10374	No

Tabella dei coefficienti di sicurezza minimi

Stato limite	Coeff.s.	Comb.	Verifica
PF_SLU	8.505	SLU 83	Si
V_SLU	3.778	SLU 79	Si
PF_SLV	1.487	SLV 3	Si
V_SLV	0.601	SLV 15	No
PFFP_SLV	3.817	SLV 11	Si
R_SLV	0.063	SLV 15	No

Maschio 110

Verifiche condotte secondo D.M. 17-01-18 (N.T.C.)

Dati geometrici

X ini.	Y ini.	X fin.	Y fin.	Quota i.	Quota.s	l	Sp.	h netta	h ini.	h fin.	a	a.s.,sx	a.s.,dx
-18.277	-3.183	-18.787	-3.183	L4	L5	0.51	0.28	3.55	3.55	3.55			

Caratteristiche del materiale

(Circolare 7 21-01-19 C8.5.I) Muratura in mattoni pieni e malta di calce LC2_Corti

fb	fk	fvk0	fmedio	τ0	fv0	μ	ϕ	fv,lim	E	G	FC
600000			345000	9000	20000	0.58	0.77	32500	320000000	128000000	1.2

Verifica a pressoflessione nel piano secondo D.M. 17-01-18 NTC §7.8.2.2.1 in combinazioni non sismiche, γM = 3

Comb.	Quota	N	M	σ0	Mu	c.s.	Verifica
SLU 83	7	-5365	8.51	37572	737.1	86.621	Si
SLU 83	7.8	-5457	190.83	38213	738.73	3.871	Si
SLU 74	7	-5219	8.41	36548	733.74	87.233	Si
SLU 74	7.8	-5283	189.84	36997	735.33	3.873	Si
SLU 71	7	-4623	9.06	32376	710.36	78.417	Si
SLU 71	7.8	-4614	172.67	32312	709.89	4.111	Si
SLU 69	7	-4707	8.91	32965	714.61	80.18	Si
SLU 69	7.8	-4701	177.18	32921	714.31	4.032	Si

Comb.	Quota	N	M	σ0	Mu	c.s.	Verifica
SLU 66	7	-4681	8.52	32783	713.33	83.691	Si
SLU 66	7.8	-4675	177.02	32738	713.01	4.028	Si
SLU 53	7	-4743	9.64	33213	716.3	74.33	Si
SLU 53	7.8	-4762	172.14	33344	717.18	4.166	Si
SLU 64	7	-4571	8.28	32012	707.59	85.453	Si
SLU 64	7.8	-4562	172.34	31945	707.06	4.103	Si
SLU 77	7	-5245	8.8	36730	734.41	83.451	Si
SLU 77	7.8	-5309	190.01	37181	735.93	3.873	Si
SLU 81	7	-5339	8.12	37390	736.57	90.708	Si
SLU 81	7.8	-5431	190.67	38030	738.3	3.872	Si
SLU 79	7	-5161	8.95	36140	732.14	81.834	Si
SLU 79	7.8	-5222	185.5	36572	733.83	3.956	Si

Verifica a pressoflessione nel piano secondo D.M. 17-01-18 NTC §7.8.2.2.1 in combinazioni sismiche, γM = 2

Comb.	Quota	N	M	σ0	Mu	c.s.	Verifica
SLV 2	7	-6200	747.27	43418	1019.22	1.364	Si
SLV 2	7.8	-5682	-847.03	39788	977.06	1.154	Si
SLV 10	7	-3846	-63.9	26935	764.61	11.965	Si
SLV 10	7.8	-3376	639.4	23640	694.28	1.086	Si
SLV 3	7	-5610	663.77	39288	970.63	1.462	Si
SLV 3	7.8	-5439	-964.41	38086	954.57	0.99	No, M>Mu
SLV 4	7	-5610	663.77	39288	970.63	1.462	Si
SLV 4	7.8	-5439	-964.41	38086	954.57	0.99	No, M>Mu
SLV 16	7	-931	-734.06	0	0	0	No, e>l/2
SLV 16	7.8	-1454	1111.73	0	0	0	No, e>l/2
SLV 15	7	-931	-734.06	0	0	0	No, e>l/2
SLV 15	7.8	-1454	1111.73	0	0	0	No, e>l/2
SLV 14	7	-1520	-650.56	0	0	0	No, e>l/2
SLV 14	7.8	-1698	1229.11	0	0	0	No, e>l/2
SLV 1	7	-6200	747.27	43418	1019.22	1.364	Si
SLV 1	7.8	-5682	-847.03	39788	977.06	1.154	Si
SLV 13	7	-1520	-650.56	0	0	0	No, e>l/2
SLV 13	7.8	-1698	1229.11	0	0	0	No, e>l/2
SLV 9	7	-3846	-63.9	26935	764.61	11.965	Si
SLV 9	7.8	-3376	639.4	23640	694.28	1.086	Si

Verifica a taglio nel piano secondo D.M. 17-01-18 (N.T.C.) §7.8.2.2.2 con rottura per scorrimento in combinazioni non sismiche, γM = 3

Comb.	Quota	N	V par	M	σ0	σN	I'	fvd	Vt scorr.	Vt fess.diag.	Vt,lim	c.s.	Verifica
SLU 74	7	-5219	-262	8.41		36548	0.51	10429	1489			5.68	Si
SLU 74	7.8	-5283	-263	189.84		36997	0.51	10488	1498			5.7	Si
SLU 77	7	-5245	-262	8.8		36730	0.51	10453	1493			5.7	Si
SLU 77	7.8	-5309	-262	190.01		37181	0.51	10513	1501			5.72	Si
SLU 79	7	-5161	-256	8.95		36140	0.51	10374	1481			5.79	Si
SLU 79	7.8	-5222	-256	185.5		36572	0.51	10432	1490			5.81	Si
SLU 60	7	-4863	-238	9.35		34055	0.51	10096	1442			6.06	Si
SLU 60	7.8	-4909	-238	172.97		34377	0.51	10139	1448			6.07	Si
SLU 66	7	-4681	-239	8.52		32783	0.51	9927	1418			5.94	Si
SLU 66	7.8	-4675	-239	177.02		32738	0.51	9921	1417			5.93	Si
SLU 64	7	-4571	-233	8.28		32012	0.51	9824	1403			6.03	Si
SLU 64	7.8	-4562	-233	172.34		31945	0.51	9815	1402			6.01	Si
SLU 69	7	-4707	-238	8.91		32965	0.51	9951	1421			5.96	Si
SLU 69	7.8	-4701	-239	177.18		32921	0.51	9945	1420			5.95	Si
SLU 71	7	-4623	-232	9.06		32376	0.51	9872	1410			6.07	Si
SLU 71	7.8	-4614	-233	172.67		32312	0.51	9864	1409			6.05	Si
SLU 83	7	-5365	-266	8.51		37572	0.51	10565	1509			5.67	Si
SLU 83	7.8	-5457	-267	190.83		38213	0.51	10651	1521			5.7	Si
SLU 81	7	-5339	-266	8.12		37390	0.51	10541	1505			5.65	Si
SLU 81	7.8	-5431	-267	190.67		38030	0.51	10626	1517			5.68	Si

Verifica a taglio nel piano secondo D.M. 17-01-18 (N.T.C.) §7.8.2.2.2 con rottura per scorrimento in combinazioni sismiche, γM = 2

Comb.	Quota	N	V par	M	σ0	σN	I'	fvd	Vt scorr.	Vt fess.diag.	Vt,lim	c.s.	Verifica
SLV 11	7	-1880	-1260	-342.23		30664	0.219	14466	887			0.7	No, Vu<V
SLV 11	7.8	-2565	-962	248.14		19295	0.4748	12192	1621			1.68	Si
SLV 14	7	-1520	-2264	-650.56		0	0	8333	0			0	No, Vu<V
SLV 14	7.8	-1698	-2397	1229.11		0	0	8333	0			0	No, Vu<V
SLV 13	7	-1520	-2264	-650.56		0	0	8333	0			0	No, Vu<V
SLV 13	7.8	-1698	-2397	1229.11		0	0	8333	0			0	No, Vu<V
SLV 15	7	-931	-2515	-734.06		0	0	8333	0			0	No, Vu<V
SLV 15	7.8	-1454	-2461	1111.73		0	0	8333	0			0	No, Vu<V
SLV 12	7	-1880	-1260	-342.23		30664	0.219	14466	887			0.7	No, Vu<V
SLV 12	7.8	-2565	-962	248.14		19295	0.4748	12192	1621			1.68	Si
SLV 1	7	-6200	2156	747.27		54888	0.4034	16250	1836			0.85	No, Vu<V
SLV 1	7.8	-5682	2102	-847.03		63859	0.3178	16250	1446			0.69	No, Vu<V
SLV 3	7	-5610	1905	663.77		48863	0.4101	16250	1866			0.98	No, Vu<V
SLV 3	7.8	-5439	2037	-964.41		83356	0.233	16250	1060			0.52	No, Vu<V
SLV 2	7	-6200	2156	747.27		54888	0.4034	16250	1836			0.85	No, Vu<V
SLV 2	7.8	-5682	2102	-847.03		63859	0.3178	16250	1446			0.69	No, Vu<V
SLV 4	7	-5610	1905	663.77		48863	0.4101	16250	1866			0.98	No, Vu<V
SLV 4	7.8	-5439	2037	-964.41		83356	0.233	16250	1060			0.52	No, Vu<V
SLV 16	7	-931	-2515	-734.06		0	0	8333	0			0	No, Vu<V
SLV 16	7.8	-1454	-2461	1111.73		0	0	8333	0			0	No, Vu<V

Verifica a pressoflessione fuori piano D.M. 17-01-18 (N.T.C.)

quota 6.775 Wa 0.05 denominatore 8 γM = 2

Comb.	fd	Sa	σ0	N	M	Mc	Coeff.s.	Verifica
SLV 12	143750	0.39	12553	-1793	53.26	225.18	4.23	Si
SLV 11	143750	0.39	12553	-1793	53.26	225.18	4.23	Si
SLV 15	143750	0.39	12903	-1843	53.26	230.72	4.33	Si
SLV 16	143750	0.39	12903	-1843	53.26	230.72	4.33	Si

Comb.	fd	Sa	σ0	N	M	Mc	Coeff.s.	Verifica
SLV 7	143750	0.39	16780	-2396	53.26	289.4	5.43	Si
SLV 8	143750	0.39	16780	-2396	53.26	289.4	5.43	Si
SLV 13	143750	0.39	17430	-2489	53.26	298.75	5.61	Si
SLV 14	143750	0.39	17430	-2489	53.26	298.75	5.61	Si
SLV 4	143750	0.39	26992	-3855	53.26	420.42	7.89	Si
SLV 3	143750	0.39	26992	-3855	53.26	420.42	7.89	Si

Verifica dei meccanismi locali di collasso con analisi cinematica lineare

forza di aggancio al piano = 0 quota mezzeria = 6.775 Wa = 0.05 Ta = 0.0752

Comb.	N top	N base	V orto	α0	M*	e*	a0*	aLim	Verifica
SLV 16	-689	-2469	78	0	145.8	0.893	0	9.20386	No
SLV 13	-672	-3050	85	0	144.1	0.893	0	9.20386	No
SLV 14	-672	-3050	85	0	144.1	0.893	0	9.20386	No
SLV 15	-689	-2469	78	0	145.8	0.893	0	9.20386	No
SLV 4	-2547	-2024	-88	0.016	331.3	0.939	0.24797	9.20386	No
SLV 3	-2547	-2024	-88	0.016	331.3	0.939	0.24797	9.20386	No
SLV 1	-2530	-2605	-81	0.018	329.6	0.939	0.28158	9.20386	No
SLV 2	-2530	-2605	-81	0.018	329.6	0.939	0.28158	9.20386	No
SLV 10	-1301	-3572	35	0.03	205.9	0.912	0.47764	8.10374	No
SLV 9	-1301	-3572	35	0.03	205.9	0.912	0.47764	8.10374	No

Tabella dei coefficienti di sicurezza minimi

Stato limite	Coeff.s.	Comb.	Verifica
PF_SLU	3.871	SLU 83	Si
V_SLU	5.648	SLU 81	Si
PF_SLV	0	SLV 13	No
V_SLV	0	SLV 13	No
PFFP_SLV	4.228	SLV 11	Si
R_SLV	0	SLV 13	No

Maschio 111

Verifiche condotte secondo D.M. 17-01-18 (N.T.C.)

Dati geometrici

X ini.	Y ini.	X fin.	Y fin.	Quota i.	Quota.s	l	Sp.	h netta	h ini.	h fin.	a	a.s.,sx	a.s.,dx
-19.663	5.937	-19.663	6.64	L4	L5	0.703	0.28	3.55	3.55	3.55			

Caratteristiche del materiale

(Circolare 7 21-01-19 C8.5.I) Muratura in mattoni pieni e malta di calce LC2_Corti

fb	fk	fvk0	fmedio	τ0	fv0	μ	ϕ	fv,lim	E	G	FC
600000			345000	9000	20000	0.58	0.77	32500	320000000	128000000	1.2

Verifica a pressoflessione nel piano secondo D.M. 17-01-18 NTC §7.8.2.2.1 in combinazioni non sismiche, γM = 3

Comb.	Quota	N	M	σ0	Mu	c.s.	Verifica
SLU 80	5	-9745	-89.63	49519	1342.78	14.982	Si
SLU 80	8.55	-6133	82.33	31163	1330.68	16.163	Si
SLU 79	5	-9751	-90.25	49550	1342.32	14.874	Si
SLU 79	8.55	-6144	82.27	31220	1331.6	16.185	Si
SLU 83	5	-9913	-96.99	50371	1329.45	13.706	Si
SLU 83	8.55	-6184	86.95	31421	1334.82	15.352	Si
SLU 78	5	-9843	-90.5	50015	1335.17	14.753	Si
SLU 78	8.55	-6222	83.35	31618	1337.89	16.052	Si
SLU 77	5	-9849	-91.12	50046	1334.69	14.647	Si
SLU 77	8.55	-6233	83.29	31675	1338.77	16.074	Si
SLU 84	5	-9907	-96.37	50340	1329.95	13.8	Si
SLU 84	8.55	-6172	87.01	31364	1333.91	15.331	Si
SLU 82	5	-9689	-95.02	49233	1346.98	14.176	Si
SLU 82	8.55	-5971	84.05	30342	1316.78	15.666	Si
SLU 74	5	-9631	-89.77	48938	1351.17	15.051	Si
SLU 74	8.55	-6032	80.33	30653	1322.17	16.459	Si
SLU 81	5	-9695	-95.64	49264	1346.54	14.079	Si
SLU 81	8.55	-5982	83.99	30399	1317.78	15.689	Si
SLU 75	5	-9625	-89.15	48907	1351.6	15.161	Si
SLU 75	8.55	-6021	80.39	30596	1321.19	16.435	Si

Verifica a pressoflessione nel piano secondo D.M. 17-01-18 NTC §7.8.2.2.1 in combinazioni sismiche, γM = 2

Comb.	Quota	N	M	σ0	Mu	c.s.	Verifica
SLV 6	5	-4265	-263.88	21673	1233.02	4.673	Si
SLV 6	8.55	-3399	581.71	17270	1025.54	1.763	Si
SLV 1	5	-7300	-485.04	37096	1786.6	3.683	Si
SLV 1	8.55	-4525	458.09	22994	1290.97	2.818	Si
SLV 5	5	-4265	-263.88	21673	1233.02	4.673	Si
SLV 5	8.55	-3399	581.71	17270	1025.54	1.763	Si
SLV 2	5	-7300	-485.04	37096	1786.6	3.683	Si
SLV 2	8.55	-4525	458.09	22994	1290.97	2.818	Si
SLV 16	5	-5776	375.06	29348	1542.15	4.112	Si
SLV 16	8.55	-3503	-363.9	17799	1051.65	2.89	Si
SLV 10	5	-3313	-21.65	16835	1003.85	46.377	Si
SLV 10	8.55	-2940	416.47	14939	906.82	2.177	Si
SLV 11	5	-8811	153.9	44770	1961.75	12.747	Si
SLV 11	8.55	-4629	-487.52	23524	1313.65	2.695	Si
SLV 15	5	-5776	375.06	29348	1542.15	4.112	Si
SLV 15	8.55	-3503	-363.9	17799	1051.65	2.89	Si
SLV 12	5	-8811	153.9	44770	1961.75	12.747	Si
SLV 12	8.55	-4629	-487.52	23524	1313.65	2.695	Si

Comb.	Quota	N	M	σ0	Mu	c.s.	Verifica
SLV 9	5	-3313	-21.65	16835	1003.85	46.377	Si
SLV 9	8.55	-2940	416.47	14939	906.82	2.177	Si

Verifica a taglio nel piano secondo D.M. 17-01-18 (N.T.C.) §7.8.2.2.2 con rottura per scorrimento in combinazioni non sismiche, γM = 3

Comb.	Quota	N	V par	M	σ0	σN	l'	fvd	Vt scorr.	Vt fess.diag.	Vt,lim	c.s.	Verifica
SLU 84	5	-9907	-750	-96.37		50340	0.7028	10833	2132			2.84	Si
SLU 84	8.55	-6172	-334	87.01		31364	0.7028	9737	1916			5.73	Si
SLU 83	5	-9913	-753	-96.99		50371	0.7028	10833	2132			2.83	Si
SLU 83	8.55	-6184	-336	86.95		31421	0.7028	9745	1918			5.71	Si
SLU 78	5	-9843	-717	-90.5		50015	0.7028	10833	2132			2.97	Si
SLU 78	8.55	-6222	-312	83.35		31618	0.7028	9771	1923			6.15	Si
SLU 74	5	-9631	-706	-89.77		48938	0.7028	10833	2132			3.02	Si
SLU 74	8.55	-6032	-304	80.33		30653	0.7028	9643	1898			6.23	Si
SLU 77	5	-9849	-720	-91.12		50046	0.7028	10833	2132			2.96	Si
SLU 77	8.55	-6233	-314	83.29		31675	0.7028	9779	1924			6.13	Si
SLU 80	5	-9745	-712	-89.63		49519	0.7028	10833	2132			2.99	Si
SLU 80	8.55	-6133	-307	82.33		31163	0.7028	9711	1911			6.23	Si
SLU 79	5	-9751	-714	-90.25		49550	0.7028	10833	2132			2.98	Si
SLU 79	8.55	-6144	-308	82.27		31220	0.7028	9718	1913			6.21	Si
SLU 81	5	-9695	-739	-95.64		49264	0.7028	10833	2132			2.88	Si
SLU 81	8.55	-5982	-326	83.99		30399	0.7028	9609	1891			5.8	Si
SLU 82	5	-9689	-737	-95.02		49233	0.7028	10833	2132			2.89	Si
SLU 82	8.55	-5971	-325	84.05		30342	0.7028	9601	1889			5.82	Si
SLU 75	5	-9625	-704	-89.15		48907	0.7028	10833	2132			3.03	Si
SLU 75	8.55	-6021	-303	80.39		30596	0.7028	9635	1896			6.26	Si

Verifica a taglio nel piano secondo D.M. 17-01-18 (N.T.C.) §7.8.2.2.2 con rottura per scorrimento in combinazioni sismiche, γM = 2

Comb.	Quota	N	V par	M	σ0	σN	l'	fvd	Vt scorr.	Vt fess.diag.	Vt,lim	c.s.	Verifica
SLV 6	5	-4265	-3015	-263.88		21673	0.7028	12668	2493			0.83	No, Vu<V
SLV 6	8.55	-3399	-1992	581.71		22445	0.5408	12822	1942			0.97	No, Vu<V
SLV 3	5	-8950	-2217	-432.38		45476	0.7028	16250	3198			1.44	Si
SLV 3	8.55	-5032	-1807	186.89		25570	0.7028	13447	2646			1.46	Si
SLV 15	5	-5776	2439	375.06		29348	0.7028	14203	2795			1.15	Si
SLV 15	8.55	-3503	2207	-363.9		17799	0.7028	11893	2341			1.06	Si
SLV 5	5	-4265	-3015	-263.88		21673	0.7028	12668	2493			0.83	No, Vu<V
SLV 5	8.55	-3399	-1992	581.71		22445	0.5408	12822	1942			0.97	No, Vu<V
SLV 2	5	-7300	-3337	-485.04		37096	0.7028	15752	3100			0.93	No, Vu<V
SLV 2	8.55	-4525	-2541	458.09		22994	0.7028	12932	2545			1	Si
SLV 16	5	-5776	2439	375.06		29348	0.7028	14203	2795			1.15	Si
SLV 16	8.55	-3503	2207	-363.9		17799	0.7028	11893	2341			1.06	Si
SLV 4	5	-8950	-2217	-432.38		45476	0.7028	16250	3198			1.44	Si
SLV 4	8.55	-5032	-1807	186.89		25570	0.7028	13447	2646			1.46	Si
SLV 10	5	-3313	-1618	-21.65		16835	0.7028	11700	2303			1.42	Si
SLV 10	8.55	-2940	-787	416.47		16685	0.6293	11670	2056			2.61	Si
SLV 9	5	-3313	-1618	-21.65		16835	0.7028	11700	2303			1.42	Si
SLV 9	8.55	-2940	-787	416.47		16685	0.6293	11670	2056			2.61	Si
SLV 1	5	-7300	-3337	-485.04		37096	0.7028	15752	3100			0.93	No, Vu<V
SLV 1	8.55	-4525	-2541	458.09		22994	0.7028	12932	2545			1	Si

Verifica a pressoflessione fuori piano D.M. 17-01-18 (N.T.C.)

quota 6.775 Wa 0.05 denominatore 8 γM = 2

Comb.	fd	Sa	σ0	N	M	Mc	Coeff.s.	Verifica
SLV 9	143750	0.39	9875	-1943	75.1	250.08	3.33	Si
SLV 10	143750	0.39	9875	-1943	75.1	250.08	3.33	Si
SLV 5	143750	0.39	13783	-2712	75.1	336.9	4.49	Si
SLV 6	143750	0.39	13783	-2712	75.1	336.9	4.49	Si
SLV 13	143750	0.39	14613	-2876	75.1	354.46	4.72	Si
SLV 14	143750	0.39	14613	-2876	75.1	354.46	4.72	Si
SLV 15	143750	0.39	22582	-4444	75.1	507.18	6.75	Si
SLV 16	143750	0.39	22582	-4444	75.1	507.18	6.75	Si
SLV 1	143750	0.39	27639	-5439	75.1	589.25	7.85	Si
SLV 2	143750	0.39	27639	-5439	75.1	589.25	7.85	Si

Verifica dei meccanismi locali di collasso con analisi cinematica lineare

forza di aggancio al piano = 0 quota mezzeria = 6.775 Wa = 0.05 Ta = 0.0752

Comb.	N top	N base	V orto	α0	M*	e*	a0*	aLim	Verifica
SLV 4	-5032	-8950	11	0.042	611	0.953	0.63972	9.20386	No
SLV 3	-5032	-8950	11	0.042	611	0.953	0.63972	9.20386	No
SLV 1	-4525	-7300	2	0.044	559.5	0.949	0.67275	9.20386	No
SLV 2	-4525	-7300	2	0.044	559.5	0.949	0.67275	9.20386	No
SLV 13	-2996	-4126	-10	0.044	404.6	0.933	0.67778	9.20386	No
SLV 14	-2996	-4126	-10	0.044	404.6	0.933	0.67778	9.20386	No
SLV 16	-3503	-5776	-1	0.045	455.8	0.939	0.69915	9.20386	No
SLV 15	-3503	-5776	-1	0.045	455.8	0.939	0.69915	9.20386	No
SLV 7	-5088	-9763	17	0.041	616.7	0.953	0.62196	8.10374	No
SLV 8	-5088	-9763	17	0.041	616.7	0.953	0.62196	8.10374	No

Tabella dei coefficienti di sicurezza minimi

Stato limite	Coeff.s.	Comb.	Verifica
PF_SLU	13.706	SLU 83	Si
V_SLU	2.833	SLU 83	Si
PF_SLV	1.763	SLV 5	Si
V_SLV	0.827	SLV 5	No
PFFP_SLV	3.33	SLV 9	Si
R_SLV	0.07	SLV 3	No

Maschio 112

Verifiche condotte secondo D.M. 17-01-18 (N.T.C.)

Dati geometrici

X ini.	Y ini.	X fin.	Y fin.	Quota i.	Quota.s	l	Sp.	h netta	h ini.	h fin.	a	a.s.,sx	a.s.,dx
-19.57	1.141	-19.57	5.797	L4	L5	4.656	0.14	3.55	3.55	3.55			

Caratteristiche del materiale

(Circolare 7 21-01-19 C8.5.I) Muratura in mattoni pieni e malta di calce LC2_Corti

fb	fk	fvk0	fmedio	τ0	fv0	μ	ϕ	fv,lim	E	G	FC
600000			345000	9000	20000	0.58	0.77	32500	320000000	128000000	1.2

Verifica a pressoflessione nel piano secondo D.M. 17-01-18 NTC §7.8.2.2.1 in combinazioni non sismiche, γM = 3

Comb.	Quota	N	M	σ0	Mu	c.s.	Verifica
SLU 78	5	-27410	2470.44	42051	30869.74	12.496	Si
SLU 78	8.55	-19172	-396.13	29413	28516.68	71.988	Si
SLU 84	5	-27548	2568.51	42263	30858.5	12.014	Si
SLU 84	8.55	-18889	-300.27	28978	28329.96	94.349	Si
SLU 73	5	-25744	2525.73	39494	30873.9	12.224	Si
SLU 73	8.55	-17537	-251.89	26905	27342.02	108.549	Si
SLU 83	5	-27613	2510.79	42362	30852.63	12.288	Si
SLU 83	8.55	-18871	-239.49	28951	28318.19	118.245	Si
SLU 75	5	-26748	2480.53	41035	30900.55	12.457	Si
SLU 75	8.55	-18494	-313.87	28372	28057.64	89.393	Si
SLU 80	5	-27111	2467.07	41592	30888.42	12.52	Si
SLU 80	8.55	-18883	-375.89	28968	28325.7	75.357	Si
SLU 76	5	-26406	2515.64	40510	30901.41	12.284	Si
SLU 76	8.55	-18216	-334.15	27945	27857.96	83.37	Si
SLU 82	5	-26886	2578.59	41247	30897.31	11.982	Si
SLU 82	8.55	-18210	-218.01	27937	27854.07	127.767	Si
SLU 74	5	-26813	2422.81	41135	30899.23	12.753	Si
SLU 74	8.55	-18476	-253.09	28345	28045.27	110.812	Si
SLU 81	5	-26951	2520.87	41346	30895.2	12.256	Si
SLU 81	8.55	-18193	-157.23	27910	27841.26	177.077	Si

Verifica a pressoflessione nel piano secondo D.M. 17-01-18 NTC §7.8.2.2.1 in combinazioni sismiche, γM = 2

Comb.	Quota	N	M	σ0	Mu	c.s.	Verifica
SLV 12	5	-20392	5969.68	31285	35318.19	5.916	Si
SLV 12	8.55	-13759	-903.24	21108	26497.38	29.336	Si
SLV 11	5	-20392	5969.68	31285	35318.19	5.916	Si
SLV 11	8.55	-13759	-903.24	21108	26497.38	29.336	Si
SLV 3	5	-25390	3732.23	38952	40264.89	10.788	Si
SLV 3	8.55	-17062	3.92	26176	31211.25	1000	Si
SLV 8	5	-24039	6373.58	36879	39071.57	6.13	Si
SLV 8	8.55	-16137	-713.91	24756	29954.83	41.959	Si
SLV 10	5	-12097	-2923.39	18559	23885.02	8.17	Si
SLV 10	8.55	-8478	516.58	13006	17635.31	34.139	Si
SLV 15	5	-13235	2385.89	20304	25690.63	10.768	Si
SLV 15	8.55	-9137	-627.19	14017	18830	30.023	Si
SLV 4	5	-25390	3732.23	38952	40264.89	10.788	Si
SLV 4	8.55	-17062	3.92	26176	31211.25	1000	Si
SLV 16	5	-13235	2385.89	20304	25690.63	10.768	Si
SLV 16	8.55	-9137	-627.19	14017	18830	30.023	Si
SLV 9	5	-12097	-2923.39	18559	23885.02	8.17	Si
SLV 9	8.55	-8478	516.58	13006	17635.31	34.139	Si
SLV 7	5	-24039	6373.58	36879	39071.57	6.13	Si
SLV 7	8.55	-16137	-713.91	24756	29954.83	41.959	Si

Verifica a taglio nel piano secondo D.M. 17-01-18 (N.T.C.) §7.8.2.2.2 con rottura per scorrimento in combinazioni non sismiche, γM = 3

Comb.	Quota	N	V par	M	σ0	σN	l'	fvd	Vt scorr.	Vt fess.diag.	Vt,lim	c.s.	Verifica
SLU 80	5	-27111	1207	2467.07		41592	4.656	10833	7062			5.85	Si
SLU 80	8.55	-18883	738	-375.89		28968	4.656	9418	6139			8.32	Si
SLU 82	5	-26886	1206	2578.59		41247	4.656	10833	7062			5.86	Si
SLU 82	8.55	-18210	730	-218.01		27937	4.656	9281	6049			8.28	Si
SLU 81	5	-26951	1185	2520.87		41346	4.656	10833	7062			5.96	Si
SLU 81	8.55	-18193	724	-157.23		27910	4.656	9277	6047			8.35	Si
SLU 79	5	-27176	1186	2409.35		41692	4.656	10833	7062			5.95	Si
SLU 79	8.55	-18865	731	-315.11		28942	4.656	9414	6137			8.39	Si
SLU 76	5	-26406	1183	2515.64		40510	4.656	10833	7062			5.97	Si
SLU 76	8.55	-18216	710	-334.15		27945	4.656	9282	6050			8.52	Si
SLU 75	5	-26748	1178	2480.53		41035	4.656	10833	7062			6	Si
SLU 75	8.55	-18494	714	-313.87		28372	4.656	9338	6087			8.53	Si
SLU 78	5	-27410	1215	2470.44		42051	4.656	10833	7062			5.81	Si
SLU 78	8.55	-19172	745	-396.13		29413	4.656	9477	6178			8.29	Si
SLU 83	5	-27613	1222	2510.79		42362	4.656	10833	7062			5.78	Si
SLU 83	8.55	-18871	756	-239.49		28951	4.656	9416	6137			8.12	Si
SLU 77	5	-27475	1194	2412.72		42151	4.656	10833	7062			5.91	Si
SLU 77	8.55	-19155	739	-335.35		29386	4.656	9474	6175			8.35	Si
SLU 84	5	-27548	1243	2568.51		42263	4.656	10833	7062			5.68	Si
SLU 84	8.55	-18889	762	-300.27		28978	4.656	9419	6140			8.06	Si

Verifica a taglio nel piano secondo D.M. 17-01-18 (N.T.C.) §7.8.2.2.2 con rottura per scorrimento in combinazioni sismiche, γM = 2

Comb.	Quota	N	V par	M	σ0	σN	l'	fvd	Vt scorr.	Vt fess.diag.	Vt,lim	c.s.	Verifica
SLV 6	5	-15744	-10130	-2519.49		24154	4.656	13164	8581			0.85	No, Vu<V
SLV 6	8.55	-10855	-8948	705.91		16654	4.656	11664	7603			0.85	No, Vu<V
SLV 13	5	-10746	-7594	-282.03		16486	4.656	11631	7581			1	No, Vu<V
SLV 13	8.55	-7552	-6356	-201.25		11586	4.656	10651	6942			1.09	Si
SLV 5	5	-15744	-10130	-2519.49		24154	4.656	13164	8581			0.85	No, Vu<V

Comb.	Quota	N	V par	M	σ0	σN	l'	fvd	Vt scorr.	Vt fess.diag.	Vt,lim	c.s.	Verifica
SLV 5	8.55	-10855	-8948	705.91		16654	4.656	11664	7603			0.85	No, Vu<V
SLV 9	5	-12097	-12922	-2923.39		18559	4.656	12045	7851			0.61	No, Vu<V
SLV 9	8.55	-8478	-11133	516.58		13006	4.656	10935	7128			0.64	No, Vu<V
SLV 12	5	-20392	11607	5969.68		31285	4.656	14590	9510			0.82	No, Vu<V
SLV 12	8.55	-13759	9799	-903.24		21108	4.656	12555	8184			0.84	No, Vu<V
SLV 11	5	-20392	11607	5969.68		31285	4.656	14590	9510			0.82	No, Vu<V
SLV 11	8.55	-13759	9799	-903.24		21108	4.656	12555	8184			0.84	No, Vu<V
SLV 7	5	-24039	14399	6373.58		36879	4.656	15709	10240			0.71	No, Vu<V
SLV 7	8.55	-16137	11984	-713.91		24756	4.656	13285	8659			0.72	No, Vu<V
SLV 10	5	-12097	-12922	-2923.39		18559	4.656	12045	7851			0.61	No, Vu<V
SLV 10	8.55	-8478	-11133	516.58		13006	4.656	10935	7128			0.64	No, Vu<V
SLV 14	5	-10746	-7594	-282.03		16486	4.656	11631	7581			1	No, Vu<V
SLV 14	8.55	-7552	-6356	-201.25		11586	4.656	10651	6942			1.09	Si
SLV 8	5	-24039	14399	6373.58		36879	4.656	15709	10240			0.71	No, Vu<V
SLV 8	8.55	-16137	11984	-713.91		24756	4.656	13285	8659			0.72	No, Vu<V

Verifica a pressoflessione fuori piano D.M. 17-01-18 (N.T.C.)

quota 6.775 Wa 0.03 denominatore 8 γM = 2

Comb.	fd	Sa	σ0	N	M	Mc	Coeff.s.	Verifica
SLV 9	143750	0.39	14968	-9757	260.06	599.31	2.3	Si
SLV 10	143750	0.39	14968	-9757	260.06	599.31	2.3	Si
SLV 13	143750	0.39	15683	-10222	260.06	623.73	2.4	Si
SLV 14	143750	0.39	15683	-10222	260.06	623.73	2.4	Si
SLV 5	143750	0.39	18173	-11846	260.06	705.88	2.71	Si
SLV 6	143750	0.39	18173	-11846	260.06	705.88	2.71	Si
SLV 16	143750	0.39	19500	-12711	260.06	747.75	2.88	Si
SLV 15	143750	0.39	19500	-12711	260.06	747.75	2.88	Si
SLV 1	143750	0.39	26366	-17186	260.06	943.44	3.63	Si
SLV 2	143750	0.39	26366	-17186	260.06	943.44	3.63	Si

Verifica dei meccanismi locali di collasso con analisi cinematica lineare

forza di aggancio al piano = 0 quota mezzeria = 6.775 Wa = 0.03 Ta = 0.1503

Comb.	N top	N base	V orto	α0	M*	e*	a0*	aLim	Verifica
SLV 8	-16137	-24039	42	0.02	1969.8	0.952	0.29992	16.55957	No
SLV 7	-16137	-24039	42	0.02	1969.8	0.952	0.29992	16.55957	No
SLV 4	-17062	-25390	35	0.02	2063.8	0.954	0.30501	16.59692	No
SLV 3	-17062	-25390	35	0.02	2063.8	0.954	0.30501	16.59692	No
SLV 10	-8478	-12097	-43	0.02	1194.3	0.927	0.30665	16.55957	No
SLV 9	-8478	-12097	-43	0.02	1194.3	0.927	0.30665	16.55957	No
SLV 12	-13759	-20392	27	0.021	1728.5	0.946	0.31614	16.55957	No
SLV 11	-13759	-20392	27	0.021	1728.5	0.946	0.31614	16.55957	No
SLV 14	-7552	-10746	-36	0.02	1101.2	0.922	0.31958	16.59692	No
SLV 13	-7552	-10746	-36	0.02	1101.2	0.922	0.31958	16.59692	No

Tabella dei coefficienti di sicurezza minimi

Stato limite	Coeff.s.	Comb.	Verifica
PF_SLU	11.982	SLU 82	Si
V_SLU	5.681	SLU 84	Si
PF_SLV	5.916	SLV 11	Si
V_SLV	0.608	SLV 9	No
PFFP_SLV	2.305	SLV 9	Si
R_SLV	0.018	SLV 7	No

Maschio 113

Verifiche condotte secondo D.M. 17-01-18 (N.T.C.)

Dati geometrici

X ini.	Y ini.	X fin.	Y fin.	Quota i.	Quota.s	l	Sp.	h netta	h ini.	h fin.	a	a.s.,sx	a.s.,dx
-16.187	-3.183	-17.277	-3.183	L4	L5	1.09	0.28	3.55	3.55	3.55			

Caratteristiche del materiale

(Circolare 7 21-01-19 C8.5.I) Muratura in mattoni pieni e malta di calce LC2_Corti

fb	fk	fvk0	fmedio	τ0	fv0	μ	ϕ	fv,lim	E	G	FC
600000			345000	9000	20000	0.58	0.77	32500	320000000	128000000	1.2

Verifica a pressoflessione nel piano secondo D.M. 17-01-18 NTC §7.8.2.2.1 in combinazioni non sismiche, γM = 3

Comb.	Quota	N	M	σ0	Mu	c.s.	Verifica
SLU 75	5.9	-10056	-883.19	32951	3263.32	3.695	Si
SLU 75	7.8	-9382	1169.25	30744	3183.27	2.722	Si
SLU 79	5.9	-10266	-884.24	33640	3284.23	3.714	Si
SLU 79	7.8	-9508	1177.69	31154	3199.65	2.717	Si
SLU 84	5.9	-10320	-896.42	33818	3289.3	3.669	Si
SLU 84	7.8	-9657	1184.82	31644	3218.32	2.716	Si
SLU 81	5.9	-10462	-917.29	34282	3301.96	3.6	Si
SLU 81	7.8	-9794	1199.38	32093	3234.53	2.697	Si
SLU 74	5.9	-10296	-903.19	33736	3286.99	3.639	Si
SLU 74	7.8	-9590	1191.39	31423	3210.02	2.694	Si
SLU 83	5.9	-10560	-916.42	34603	3310.19	3.612	Si
SLU 83	7.8	-9864	1206.96	32324	3242.57	2.687	Si
SLU 80	5.9	-10027	-864.24	32855	3260.25	3.772	Si
SLU 80	7.8	-9300	1155.55	30475	3172.15	2.745	Si
SLU 78	5.9	-10154	-882.32	33272	3273.29	3.71	Si
SLU 78	7.8	-9453	1176.83	30975	3192.58	2.713	Si
SLU 82	5.9	-10223	-897.29	33497	3280.04	3.655	Si
SLU 82	7.8	-9587	1177.24	31413	3209.64	2.726	Si

Comb.	Quota	N	M	σ0	Mu	c.s.	Verifica
SLU 77	5.9	-10393	-902.32	34057	3295.93	3.653	Si
SLU 77	7.8	-9660	1198.97	31654	3218.68	2.685	Si

Verifica a pressoflessione nel piano secondo D.M. 17-01-18 NTC §7.8.2.2.1 in combinazioni sismiche, γM = 2

Comb.	Quota	N	M	σ0	Mu	c.s.	Verifica
SLV 13	5.9	-3740	-4180.66	0	0	0	No, e>l/2
SLV 13	7.8	-9381	2812.31	30738	3826.04	1.36	Si
SLV 3	5.9	-10517	2930.44	34462	4114.86	1.404	Si
SLV 3	7.8	-3662	-1150.51	11999	1799.56	1.564	Si
SLV 1	5.9	-11947	2316.88	39148	4424.7	1.91	Si
SLV 1	7.8	-5771	-725.57	18909	2658.12	3.663	Si
SLV 9	5.9	-8281	-2622.34	27134	3510.5	1.339	Si
SLV 9	7.8	-10578	2069.82	34660	4129.2	1.995	Si
SLV 16	5.9	-2310	-3567.1	0	0	0	No, e>l/2
SLV 16	7.8	-7272	2387.37	23828	3190	1.336	Si
SLV 15	5.9	-2310	-3567.1	0	0	0	No, e>l/2
SLV 15	7.8	-7272	2387.37	23828	3190	1.336	Si
SLV 14	5.9	-3740	-4180.66	0	0	0	No, e>l/2
SLV 14	7.8	-9381	2812.31	30738	3826.04	1.36	Si
SLV 4	5.9	-10517	2930.44	34462	4114.86	1.404	Si
SLV 4	7.8	-3662	-1150.51	11999	1799.56	1.564	Si
SLV 10	5.9	-8281	-2622.34	27134	3510.5	1.339	Si
SLV 10	7.8	-10578	2069.82	34660	4129.2	1.995	Si
SLV 2	5.9	-11947	2316.88	39148	4424.7	1.91	Si
SLV 2	7.8	-5771	-725.57	18909	2658.12	3.663	Si

Verifica a taglio nel piano secondo D.M. 17-01-18 (N.T.C.) §7.8.2.2.2 con rottura per scorrimento in combinazioni non sismiche, γM = 3

Comb.	Quota	N	V par	M	σ0	σN	l'	fvd	Vt scorr.	Vt fess.diag.	Vt,lim	c.s.	Verifica
SLU 83	5.9	-10560	-1780	-916.42		34603	1.0899	10169	3103			1.74	Si
SLU 83	7.8	-9864	-783	1206.96		32324	1.0899	9865	3011			3.85	Si
SLU 84	5.9	-10320	-1760	-896.42		33818	1.0899	10065	3071			1.74	Si
SLU 84	7.8	-9657	-798	1184.82		31644	1.0899	9775	2983			3.74	Si
SLU 74	5.9	-10296	-1745	-903.19		33736	1.0899	10054	3068			1.76	Si
SLU 74	7.8	-9590	-794	1191.39		31423	1.0899	9745	2974			3.75	Si
SLU 78	5.9	-10154	-1716	-882.32		33272	1.0899	9992	3049			1.78	Si
SLU 78	7.8	-9453	-819	1176.83		30975	1.0899	9686	2956			3.61	Si
SLU 76	5.9	-9769	-1674	-851.78		32011	1.0899	9824	2998			1.79	Si
SLU 76	7.8	-9092	-808	1133.21		29791	1.0899	9528	2908			3.6	Si
SLU 82	5.9	-10223	-1770	-897.29		33497	1.0899	10022	3058			1.73	Si
SLU 82	7.8	-9587	-787	1177.24		31413	1.0899	9744	2974			3.78	Si
SLU 81	5.9	-10462	-1790	-917.29		34282	1.0899	10126	3090			1.73	Si
SLU 81	7.8	-9794	-773	1199.38		32093	1.0899	9835	3001			3.88	Si
SLU 77	5.9	-10393	-1736	-902.32		34057	1.0899	10096	3081			1.77	Si
SLU 77	7.8	-9660	-804	1198.97		31654	1.0899	9776	2983			3.71	Si
SLU 73	5.9	-9671	-1683	-852.65		31691	1.0899	9781	2985			1.77	Si
SLU 73	7.8	-9021	-797	1125.63		29560	1.0899	9497	2898			3.64	Si
SLU 75	5.9	-10056	-1725	-883.19		32951	1.0899	9949	3036			1.76	Si
SLU 75	7.8	-9382	-809	1169.25		30744	1.0899	9655	2946			3.64	Si

Verifica a taglio nel piano secondo D.M. 17-01-18 (N.T.C.) §7.8.2.2.2 con rottura per scorrimento in combinazioni sismiche, γM = 2

Comb.	Quota	N	V par	M	σ0	σN	l'	fvd	Vt scorr.	Vt fess.diag.	Vt,lim	c.s.	Verifica
SLV 3	5.9	-10517	4811	2930.44		47012	0.799	16250	3635			0.76	No, Vu<V
SLV 3	7.8	-3662	1786	-1150.51		18891	0.6923	12111	2348			1.31	Si
SLV 2	5.9	-11947	4069	2316.88		40517	1.0531	16250	4792			1.18	Si
SLV 2	7.8	-5771	1115	-725.57		18909	1.0899	12115	3697			3.32	Si
SLV 4	5.9	-10517	4811	2930.44		47012	0.799	16250	3635			0.76	No, Vu<V
SLV 4	7.8	-3662	1786	-1150.51		18891	0.6923	12111	2348			1.31	Si
SLV 15	5.9	-2310	-6455	-3567.1		0	0	8333	0			0	No, Vu<V
SLV 15	7.8	-7272	-2286	2387.37		39957	0.65	16250	2957			1.29	Si
SLV 14	5.9	-3740	-7197	-4180.66		0	0	8333	0			0	No, Vu<V
SLV 14	7.8	-9381	-2958	2812.31		45552	0.7355	16250	3346			1.13	Si
SLV 13	5.9	-3740	-7197	-4180.66		0	0	8333	0			0	No, Vu<V
SLV 13	7.8	-9381	-2958	2812.31		45552	0.7355	16250	3346			1.13	Si
SLV 16	5.9	-2310	-6455	-3567.1		0	0	8333	0			0	No, Vu<V
SLV 16	7.8	-7272	-2286	2387.37		39957	0.65	16250	2957			1.29	Si
SLV 9	5.9	-8281	-4120	-2622.34		43184	0.6848	16250	3116			0.76	No, Vu<V
SLV 9	7.8	-10578	-2316	2069.82		36052	1.0478	15544	4560			1.97	Si
SLV 10	5.9	-8281	-4120	-2622.34		43184	0.6848	16250	3116			0.76	No, Vu<V
SLV 10	7.8	-10578	-2316	2069.82		36052	1.0478	15544	4560			1.97	Si
SLV 1	5.9	-11947	4069	2316.88		40517	1.0531	16250	4792			1.18	Si
SLV 1	7.8	-5771	1115	-725.57		18909	1.0899	12115	3697			3.32	Si

Verifica a pressoflessione fuori piano D.M. 17-01-18 (N.T.C.)

quota 6.775 Wa 0.05 denominatore 8 γM = 2

Comb.	fd	Sa	σ0	N	M	Mc	Coeff.s.	Verifica
SLV 16	143750	0.39	7168	-2188	113.81	288.29	2.53	Si
SLV 15	143750	0.39	7168	-2188	113.81	288.29	2.53	Si
SLV 13	143750	0.39	10925	-3334	113.81	425.03	3.73	Si
SLV 14	143750	0.39	10925	-3334	113.81	425.03	3.73	Si
SLV 12	143750	0.39	11777	-3594	113.81	454.68	3.99	Si
SLV 11	143750	0.39	11777	-3594	113.81	454.68	3.99	Si
SLV 7	143750	0.39	19484	-5946	113.81	699.72	6.15	Si
SLV 8	143750	0.39	19484	-5946	113.81	699.72	6.15	Si
SLV 10	143750	0.39	24299	-7416	113.81	831.72	7.31	Si
SLV 9	143750	0.39	24299	-7416	113.81	831.72	7.31	Si

Verifica dei meccanismi locali di collasso con analisi cinematica lineare

forza di aggancio al piano = 0 quota mezzeria = 6.775 Wa = 0.05 Ta = 0.0752

Comb.	N top	N base	V orto	α0	M*	e*	a0*	aLim	Verifica

Comb.	N top	N base	V orto	α0	M*	e*	a0*	aLim	Verifica
SLV 7	-2607	-2769	-154	0.007	422.6	0.91	0.11325	8.10374	No
SLV 8	-2607	-2769	-154	0.007	422.6	0.91	0.11325	8.10374	No
SLV 12	-3567	-3829	-184	0.007	518.6	0.922	0.11814	8.10374	No
SLV 11	-3567	-3829	-184	0.007	518.6	0.922	0.11814	8.10374	No
SLV 5	-6746	-11102	174	0.022	840.1	0.948	0.33647	8.10374	No
SLV 6	-6746	-11102	174	0.022	840.1	0.948	0.33647	8.10374	No
SLV 1	-4177	-6949	93	0.029	580.1	0.929	0.45188	9.20386	No
SLV 2	-4177	-6949	93	0.029	580.1	0.929	0.45188	9.20386	No
SLV 15	-6135	-7982	-103	0.03	778.2	0.944	0.46766	9.20386	No
SLV 16	-6135	-7982	-103	0.03	778.2	0.944	0.46766	9.20386	No

Tabella dei coefficienti di sicurezza minimi

Stato limite	Coeff.s.	Comb.	Verifica
PF_SLU	2.685	SLU 77	Si
V_SLU	1.727	SLU 81	Si
PF_SLV	0	SLV 13	No
V_SLV	0	SLV 13	No
PFFP_SLV	2.533	SLV 15	Si
R_SLV	0.014	SLV 7	No

Maschio 114

Verifiche condotte secondo D.M. 17-01-18 (N.T.C.)

Dati geometrici

X ini.	Y ini.	X fin.	Y fin.	Quota i.	Quota.s	l	Sp.	h netta	h ini.	h fin.	a	a.s.,sx	a.s.,dx
-18.448	-3.183	-18.448	1.141	L4	L5	4.324	0.14	3.55	3.55	3.55			

Caratteristiche del materiale

(Circolare 7 21-01-19 C8.5.I) Muratura in mattoni pieni e malta di calce LC2_Corti

fb	fk	fvk0	fmedio	τ0	fv0	μ	ϕ	fv,lim	E	G	FC
600000			345000	9000	20000	0.58	0.77	32500	320000000	128000000	1.2

Verifica a pressoflessione nel piano secondo D.M. 17-01-18 NTC §7.8.2.2.1 in combinazioni non sismiche, γM = 3

Comb.	Quota	N	M	σ0	Mu	c.s.	Verifica
SLU 72	5	-22622	465.72	37370	26472.14	56.841	Si
SLU 72	8.55	-14729	2126.22	24331	22332.88	10.504	Si
SLU 36	5	-21713	842.72	35867	26273.66	31.177	Si
SLU 36	8.55	-14059	2064.06	23224	21730.1	10.528	Si
SLU 80	5	-25145	666.67	41536	26643.02	39.965	Si
SLU 80	8.55	-16201	2245.97	26763	23519.54	10.472	Si
SLU 26	5	-18929	777.91	31268	25215.29	32.414	Si
SLU 26	8.55	-11991	1864.55	19808	19621.2	10.523	Si
SLU 30	5	-18911	649.85	31239	25206.46	38.788	Si
SLU 30	8.55	-12285	1927.49	20294	19943.83	10.347	Si
SLU 28	5	-19190	641.78	31700	25343.71	39.49	Si
SLU 28	8.55	-12587	1944.31	20792	20266.84	10.424	Si
SLU 34	5	-21451	978.86	35435	26203.12	26.769	Si
SLU 34	8.55	-13464	1984.3	22241	21161.33	10.664	Si
SLU 38	5	-21433	850.79	35406	26198.17	30.793	Si
SLU 38	8.55	-13758	2047.24	22726	21446.02	10.476	Si
SLU 70	5	-22902	457.65	37831	26518.52	57.945	Si
SLU 70	8.55	-15030	2143.04	24829	22591.29	10.542	Si
SLU 78	5	-25424	658.59	41998	26627.64	40.431	Si
SLU 78	8.55	-16503	2262.79	27261	23739.03	10.491	Si

Verifica a pressoflessione nel piano secondo D.M. 17-01-18 NTC §7.8.2.2.1 in combinazioni sismiche, γM = 2

Comb.	Quota	N	M	σ0	Mu	c.s.	Verifica
SLV 9	5	-21809	2771.8	36027	33249.5	11.996	Si
SLV 9	8.55	-12068	2800.28	19934	21833.99	7.797	Si
SLV 7	5	-11196	-3302.92	18495	20542.75	6.22	Si
SLV 7	8.55	-9347	-774.91	15440	17654.39	22.783	Si
SLV 15	5	-9328	-4126.32	15409	17624.5	4.271	Si
SLV 15	8.55	-7118	630.36	11759	13908.91	22.065	Si
SLV 8	5	-11196	-3302.92	18495	20542.75	6.22	Si
SLV 8	8.55	-9347	-774.91	15440	17654.39	22.783	Si
SLV 10	5	-21809	2771.8	36027	33249.5	11.996	Si
SLV 10	8.55	-12068	2800.28	19934	21833.99	7.797	Si
SLV 12	5	-8123	-4926.53	13419	15634.14	3.173	Si
SLV 12	8.55	-7596	-690.16	12548	14736.02	21.352	Si
SLV 16	5	-9328	-4126.32	15409	17624.5	4.271	Si
SLV 16	8.55	-7118	630.36	11759	13908.91	22.065	Si
SLV 11	5	-8123	-4926.53	13419	15634.14	3.173	Si
SLV 11	8.55	-7596	-690.16	12548	14736.02	21.352	Si
SLV 5	5	-24882	4395.41	41103	35699.53	8.122	Si
SLV 5	8.55	-13819	2715.53	22827	24294.66	8.947	Si
SLV 6	5	-24882	4395.41	41103	35699.53	8.122	Si
SLV 6	8.55	-13819	2715.53	22827	24294.66	8.947	Si

Verifica a taglio nel piano secondo D.M. 17-01-18 (N.T.C.) §7.8.2.2.2 con rottura per scorrimento in combinazioni non sismiche, γM = 3

Comb.	Quota	N	V par	M	σ0	σN	l'	fvd	Vt scorr.	Vt fess.diag.	Vt,lim	c.s.	Verifica
SLU 13	5	-19063	-1979	775.31		31490	4.324	9754	5905			2.98	Si
SLU 13	8.55	-11965	-1286	1763.07		19765	4.324	8191	4959			3.86	Si
SLU 5	5	-16541	-1952	574.37		27323	4.324	9199	5569			2.85	Si
SLU 5	8.55	-10493	-1268	1643.32		17333	4.324	7867	4762			3.76	Si
SLU 47	5	-20252	-1977	390.24		33454	4.324	10016	6063			3.07	Si

Comb.	Quota	N	V par	M	σ0	σN	l'	fvd	Vt scorr.	Vt fess.diag.	Vt,lim	c.s.	Verifica
SLU 47	8.55	-12937	-1285	1842.05		21370	4.324	8405	5088			3.96	Si
SLU 10	5	-18664	-1949	593.78		30831	4.324	9666	5852			3	Si
SLU 10	8.55	-11574	-1257	1510.09		19119	4.324	8105	4906			3.9	Si
SLU 44	5	-19853	-1946	208.72		32794	4.324	9928	6010			3.09	Si
SLU 44	8.55	-12545	-1255	1589.07		20724	4.324	8319	5036			4.01	Si
SLU 26	5	-18929	-1994	777.91		31268	4.324	9725	5887			2.95	Si
SLU 26	8.55	-11991	-1301	1864.55		19808	4.324	8197	4962			3.82	Si
SLU 34	5	-21451	-2021	978.86		35435	4.324	10280	6223			3.08	Si
SLU 34	8.55	-13464	-1318	1984.3		22241	4.324	8521	5158			3.91	Si
SLU 2	5	-16141	-1921	392.84		26664	4.324	9111	5515			2.87	Si
SLU 2	8.55	-10102	-1239	1390.34		16687	4.324	7780	4710			3.8	Si
SLU 31	5	-21052	-1991	797.33		34776	4.324	10192	6170			3.1	Si
SLU 31	8.55	-13073	-1289	1731.32		21594	4.324	8435	5106			3.96	Si
SLU 23	5	-18530	-1963	596.39		30609	4.324	9637	5834			2.97	Si
SLU 23	8.55	-11600	-1271	1611.57		19162	4.324	8111	4910			3.86	Si

Verifica a taglio nel piano secondo D.M. 17-01-18 (N.T.C.) §7.8.2.2.2 con rottura per scorrimento in combinazioni sismiche, γM = 2

Comb.	Quota	N	V par	M	σ0	σN	l'	fvd	Vt scorr.	Vt fess.diag.	Vt,lim	c.s.	Verifica
SLV 5	5	-24882	-12032	4395.41		41103	4.324	16250	9837			0.82	No, Vu<V
SLV 5	8.55	-13819	-9734	2715.53		22827	4.324	12899	7808			0.8	No, Vu<V
SLV 9	5	-21809	-11449	2771.8		36027	4.324	15539	9407			0.82	No, Vu<V
SLV 9	8.55	-12068	-9046	2800.28		19934	4.324	12320	7458			0.82	No, Vu<V
SLV 12	5	-8123	11728	-4926.53		13419	4.324	11017	6669			0.57	No, Vu<V
SLV 12	8.55	-7596	9522	-690.16		12548	4.324	10843	6564			0.69	No, Vu<V
SLV 8	5	-11196	11146	-3302.92		18495	4.324	12032	7284			0.65	No, Vu<V
SLV 8	8.55	-9347	8833	-774.91		15440	4.324	11421	6914			0.78	No, Vu<V
SLV 6	5	-24882	-12032	4395.41		41103	4.324	16250	9837			0.82	No, Vu<V
SLV 6	8.55	-13819	-9734	2715.53		22827	4.324	12899	7808			0.8	No, Vu<V
SLV 16	5	-9328	4296	-4126.32		15409	4.324	11415	6910			1.61	Si
SLV 16	8.55	-7118	3826	630.36		11759	4.324	10685	6468			1.69	Si
SLV 7	5	-11196	11146	-3302.92		18495	4.324	12032	7284			0.65	No, Vu<V
SLV 7	8.55	-9347	8833	-774.91		15440	4.324	11421	6914			0.78	No, Vu<V
SLV 15	5	-9328	4296	-4126.32		15409	4.324	11415	6910			1.61	Si
SLV 15	8.55	-7118	3826	630.36		11759	4.324	10685	6468			1.69	Si
SLV 11	5	-8123	11728	-4926.53		13419	4.324	11017	6669			0.57	No, Vu<V
SLV 11	8.55	-7596	9522	-690.16		12548	4.324	10843	6564			0.69	No, Vu<V
SLV 10	5	-21809	-11449	2771.8		36027	4.324	15539	9407			0.82	No, Vu<V
SLV 10	8.55	-12068	-9046	2800.28		19934	4.324	12320	7458			0.82	No, Vu<V

Verifica a pressoflessione fuori piano D.M. 17-01-18 (N.T.C.)

quota 6.775 Wa 0.03 denominatore 8 γM = 2

Comb.	fd	Sa	σ0	N	M	Mc	Coeff.s.	Verifica
SLV 15	143750	0.39	14198	-8595	241.52	531.75	2.2	Si
SLV 16	143750	0.39	14198	-8595	241.52	531.75	2.2	Si
SLV 12	143750	0.39	14617	-8849	241.52	545.31	2.26	Si
SLV 11	143750	0.39	14617	-8849	241.52	545.31	2.26	Si
SLV 13	143750	0.39	18067	-10937	241.52	652.38	2.7	Si
SLV 14	143750	0.39	18067	-10937	241.52	652.38	2.7	Si
SLV 7	143750	0.39	18844	-11408	241.52	675.38	2.8	Si
SLV 8	143750	0.39	18844	-11408	241.52	675.38	2.8	Si
SLV 9	143750	0.39	27511	-16654	241.52	903.32	3.74	Si
SLV 10	143750	0.39	27511	-16654	241.52	903.32	3.74	Si

Verifica dei meccanismi locali di collasso con analisi cinematica lineare

forza di aggancio al piano = 0 quota mezzeria = 6.775 Wa = 0.03 Ta = 0.1503

Comb.	N top	N base	V orto	α0	M*	e*	a0*	aLim	Verifica
SLV 1	-14296	-23677	25	0.021	1759.3	0.95	0.31436	16.59692	No
SLV 2	-14296	-23677	25	0.021	1759.3	0.95	0.31436	16.59692	No
SLV 4	-12955	-19572	23	0.021	1623.1	0.947	0.31834	16.59692	No
SLV 3	-12955	-19572	23	0.021	1623.1	0.947	0.31834	16.59692	No
SLV 13	-8460	-13434	-24	0.021	1168.2	0.93	0.32977	16.59692	No
SLV 14	-8460	-13434	-24	0.021	1168.2	0.93	0.32977	16.59692	No
SLV 6	-13819	-24882	9	0.022	1710.8	0.949	0.32987	16.55957	No
SLV 5	-13819	-24882	9	0.022	1710.8	0.949	0.32987	16.55957	No
SLV 16	-7118	-9328	-25	0.021	1033.2	0.923	0.33278	16.59692	No
SLV 15	-7118	-9328	-25	0.021	1033.2	0.923	0.33278	16.59692	No

Tabella dei coefficienti di sicurezza minimi

Stato limite	Coeff.s.	Comb.	Verifica
PF_SLU	10.347	SLU 30	Si
V_SLU	2.853	SLU 5	Si
PF_SLV	3.173	SLV 11	Si
V_SLV	0.569	SLV 11	No
PFFP_SLV	2.202	SLV 15	Si
R_SLV	0.019	SLV 1	No

Maschio 115

Verifiche condotte secondo D.M. 17-01-18 (N.T.C.)

Dati geometrici

X ini.	Y ini.	X fin.	Y fin.	Quota i.	Quota.s	l	Sp.	h netta	h ini.	h fin.	a	a.s.,sx	a.s.,dx
-16.968	-4.546	-16.968	-4.413	L4	L5	0.133	0.28	3.55	3.55	3.55			

Caratteristiche del materiale

(Circolare 7 21-01-19 C8.5.I) Muratura in mattoni pieni e malta di calce LC2_Corti

fb	fk	fvk0	fmedio	τ0	fv0	μ	ϕ	fv,lim	E	G	FC
600000			345000	9000	20000	0.58	0.77	32500	320000000	128000000	1.2

Verifica a pressoflessione nel piano secondo D.M. 17-01-18 NTC §7.8.2.2.1 in combinazioni non sismiche, γM = 3

Comb.	Quota	N	M	σ0	Mu	c.s.	Verifica
SLU 60	5	-1457	-24.36	39051	50.54	2.075	Si
SLU 60	8.11	-230	45.51	0	0	0	No, e>l/2
SLU 59	5	-1831	2.23	49071	48.5	21.796	Si
SLU 59	8.11	-185	35.21	0	0	0	No, e>l/2
SLU 58	5	-1569	-19.79	42056	50.57	2.556	Si
SLU 58	8.11	-234	45.63	0	0	0	No, e>l/2
SLU 55	5	-1929	15.27	51707	46.95	3.075	Si
SLU 55	8.11	-146	27.39	0	0	0	No, e>l/2
SLU 56	5	-1555	-20.68	41675	50.6	2.447	Si
SLU 56	8.11	-235	45.85	0	0	0	No, e>l/2
SLU 54	5	-1741	-0.3	46650	49.56	165.908	Si
SLU 54	8.11	-179	34.56	0	0	0	No, e>l/2
SLU 53	5	-1479	-22.31	39635	50.59	2.267	Si
SLU 53	8.11	-229	44.97	0	0	0	No, e>l/2
SLU 57	5	-1817	1.33	48690	48.69	36.497	Si
SLU 57	8.11	-185	35.44	0	0	0	No, e>l/2
SLU 61	5	-1719	-2.34	46065	49.76	21.221	Si
SLU 61	8.11	-181	35.1	0	0	0	No, e>l/2
SLU 1	5	-1044	-15.97	27982	45.67	2.859	Si
SLU 1	8.11	-161	31.71	0	0	0	No, e>l/2

Verifica a pressoflessione nel piano secondo D.M. 17-01-18 NTC §7.8.2.2.1 in combinazioni sismiche, γM = 2

Comb.	Quota	N	M	σ0	Mu	c.s.	Verifica
SLV 9	5	3020	-309.81	0	0	0	No, Trazione
SLV 9	8.11	-905	178.23	0	0	0	No, e>l/2
SLV 1	5	-1514	-4.81	40576	67.38	14.003	Si
SLV 1	8.11	-146	27.4	0	0	0	No, e>l/2
SLV 10	5	3020	-309.81	0	0	0	No, Trazione
SLV 10	8.11	-905	178.23	0	0	0	No, e>l/2
SLV 7	5	-5218	274.87	139853	0	0	No, Rottura per schiacciamento
SLV 7	8.11	561	-110.54	0	0	0	No, Trazione
SLV 2	5	-1514	-4.81	40576	67.38	14.003	Si
SLV 2	8.11	-146	27.4	0	0	0	No, e>l/2
SLV 4	5	-3713	154.02	99508	45.92	0.298	No, M>Mu
SLV 4	8.11	254	-51.02	0	0	0	No, Trazione
SLV 5	5	2111	-254.56	0	0	0	No, Trazione
SLV 5	8.11	-769	150.84	0	0	0	No, e>l/2
SLV 6	5	2111	-254.56	0	0	0	No, Trazione
SLV 6	8.11	-769	150.84	0	0	0	No, e>l/2
SLV 3	5	-3713	154.02	99508	45.92	0.298	No, M>Mu
SLV 3	8.11	254	-51.02	0	0	0	No, Trazione
SLV 8	5	-5218	274.87	139853	0	0	No, Rottura per schiacciamento
SLV 8	8.11	561	-110.54	0	0	0	No, Trazione

Verifica a taglio nel piano secondo D.M. 17-01-18 (N.T.C.) §7.8.2.2.2 con rottura per scorrimento in combinazioni non sismiche, γM = 3

Comb.	Quota	N	V par	M	σ0	σN	l'	fvd	Vt scorr.	Vt fess.diag.	Vt,lim	c.s.	Verifica
SLU 57	5	-1817	3	1.33		48690	0.1333	10833	404			118.25	Si
SLU 57	8.11	-185	41	35.44		0	0	5556	0			0	No, Vu<V
SLU 61	5	-1719	-5	-2.34		46065	0.1333	10833	404			74.21	Si
SLU 61	8.11	-181	48	35.1		0	0	5556	0			0	No, Vu<V
SLU 54	5	-1741	-1	-0.3		46650	0.1333	10833	404			714.63	Si
SLU 54	8.11	-179	44	34.56		0	0	5556	0			0	No, Vu<V
SLU 59	5	-1831	6	2.23		49071	0.1333	10833	404			69.62	Si
SLU 59	8.11	-185	40	35.21		0	0	5556	0			0	No, Vu<V
SLU 55	5	-1929	45	15.27		51707	0.1333	10833	404			9.06	Si
SLU 55	8.11	-146	56	27.39		0	0	5556	0			0	No, Vu<V
SLU 56	5	-1555	-61	-20.68		41675	0.1333	10833	404			6.65	Si
SLU 56	8.11	-235	21	45.85		0	0	5556	0			0	No, Vu<V
SLU 58	5	-1569	-58	-19.79		42056	0.1333	10833	404			6.93	Si
SLU 58	8.11	-234	19	45.63		0	0	5556	0			0	No, Vu<V
SLU 60	5	-1457	-70	-24.36		39051	0.1333	10762	402			5.77	Si
SLU 60	8.11	-230	28	45.51		0	0	5556	0			0	No, Vu<V
SLU 1	5	-1044	-47	-15.97		27982	0.1333	9287	346			7.43	Si
SLU 1	8.11	-161	15	31.71		0	0	5556	0			0	No, Vu<V
SLU 53	5	-1479	-65	-22.31		39635	0.1333	10833	404			6.24	Si
SLU 53	8.11	-229	24	44.97		0	0	5556	0			0	No, Vu<V

Verifica a taglio nel piano secondo D.M. 17-01-18 (N.T.C.) §7.8.2.2.2 con rottura per scorrimento in combinazioni sismiche, γM = 2

Comb.	Quota	N	V par	M	σ0	σN	l'	fvd	Vt scorr.	Vt fess.diag.	Vt,lim	c.s.	Verifica
SLV 10	5	3020	-913	-309.81		0	0	8333	0			0	No, Vu<V
SLV 10	8.11	-905	209	178.23		0	0	8333	0			0	No, Vu<V
SLV 8	5	-5218	812	274.87		445209	0.0419	16250	190			0.23	No, Vu<V
SLV 8	8.11	561	-171	-110.54		0	0	8333	0			0	No, Vu<V
SLV 3	5	-3713	459	154.02		175778	0.0754	16250	343			0.75	No, Vu<V
SLV 3	8.11	254	-91	-51.02		0	0	8333	0			0	No, Vu<V
SLV 2	5	-1514	-9	-4.81		40576	0.1333	16250	606			69.43	Si
SLV 2	8.11	-146	13	27.4		0	0	8333	0			0	No, Vu<V
SLV 5	5	2111	-748	-254.56		0	0	8333	0			0	No, Vu<V
SLV 5	8.11	-769	174	150.84		0	0	8333	0			0	No, Vu<V
SLV 7	5	-5218	812	274.87		445209	0.0419	16250	190			0.23	No, Vu<V
SLV 7	8.11	561	-171	-110.54		0	0	8333	0			0	No, Vu<V
SLV 4	5	-3713	459	154.02		175778	0.0754	16250	343			0.75	No, Vu<V
SLV 4	8.11	254	-91	-51.02		0	0	8333	0			0	No, Vu<V
SLV 1	5	-1514	-9	-4.81		40576	0.1333	16250	606			69.43	Si

Comb.	Quota	N	V par	M	σ0	σN	l'	fvd	Vt scorr.	Vt fess.diag.	Vt,lim	c.s.	Verifica
SLV 1	8.11	-146	13	27.4		0	0	8333	0			0	No, Vu<V
SLV 6	5	2111	-748	-254.56		0	0	8333	0			0	No, Vu<V
SLV 6	8.11	-769	174	150.84		0	0	8333	0			0	No, Vu<V
SLV 9	5	3020	-913	-309.81		0	0	8333	0			0	No, Vu<V
SLV 9	8.11	-905	209	178.23		0	0	8333	0			0	No, Vu<V

Verifica a pressoflessione fuori piano D.M. 17-01-18 (N.T.C.)

quota 6.775 Wa 0.05 denominatore 8 γM = 2

Comb.	fd	Sa	σ0	N	M	Mc	Coeff.s.	Verifica
SLV 7	143750	0.39	0	615	13.59	0	0	No, Trazione
SLV 11	143750	0.39	0	551	13.59	0	0	No, Trazione
SLV 12	143750	0.39	0	551	13.59	0	0	No, Trazione
SLV 8	143750	0.39	0	615	13.59	0	0	No, Trazione
SLV 4	143750	0.39	17808	-664	13.59	79.47	5.85	Si
SLV 3	143750	0.39	17808	-664	13.59	79.47	5.85	Si
SLV 16	143750	0.39	23529	-878	13.59	99.24	7.3	Si
SLV 15	143750	0.39	23529	-878	13.59	99.24	7.3	Si
SLV 9	143750	0.39	88917	-3318	13.59	126.47	9.31	Si
SLV 10	143750	0.39	88917	-3318	13.59	126.47	9.31	Si

Verifica dei meccanismi locali di collasso con analisi cinematica lineare

forza di aggancio al piano = 0 quota mezzeria = 6.775 Wa = 0.05 Ta = 0.0752

Comb.	N top	N base	V orto	α0	M*	e*	a0*	aLim	Verifica
SLV 9	-2197	3020	24	0	0	0	0	8.10374	No, Trazione
SLV 12	1736	-4310	-32	0	0	0	0	8.10374	No, Trazione
SLV 6	-2445	2111	32	0	0	0	0	8.10374	No, Trazione
SLV 8	1488	-5218	-24	0	0	0	0	8.10374	No, Trazione
SLV 14	-532	1515	-4	0	0	0	0	9.20386	No, Trazione
SLV 7	1488	-5218	-24	0	0	0	0	8.10374	No, Trazione
SLV 5	-2445	2111	32	0	0	0	0	8.10374	No, Trazione
SLV 13	-532	1515	-4	0	0	0	0	9.20386	No, Trazione
SLV 11	1736	-4310	-32	0	0	0	0	8.10374	No, Trazione
SLV 10	-2197	3020	24	0	0	0	0	8.10374	No, Trazione

Tabella dei coefficienti di sicurezza minimi

Stato limite	Coeff.s.	Comb.	Verifica
PF_SLU	0	SLU 1	No
V_SLU	0	SLU 1	No
PF_SLV	0	SLV 14	No
V_SLV	0	SLV 1	No
PFFP_SLV	0	SLV 12	No
R_SLV	0	SLV 16	No

Maschio 116

Verifiche condotte secondo D.M. 17-01-18 (N.T.C.)

Dati geometrici

X ini.	Y ini.	X fin.	Y fin.	Quota i.	Quota.s	l	Sp.	h netta	h ini.	h fin.	a	a.s.,sx	a.s.,dx
-13.727	-3.183	-15.287	-3.183	L4	L5	1.56	0.28	3.55	3.55	3.55			

Caratteristiche del materiale

(Circolare 7 21-01-19 C8.5.I) Muratura in mattoni pieni e malta di calce LC2_Corti

fb	fk	fvk0	fmedio	τ0	fv0	μ	ϕ	fv,lim	E	G	FC
600000			345000	9000	20000	0.58	0.77	32500	320000000	128000000	1.2

Verifica a pressoflessione nel piano secondo D.M. 17-01-18 NTC §7.8.2.2.1 in combinazioni non sismiche, γM = 3

Comb.	Quota	N	M	σ0	Mu	c.s.	Verifica
SLU 82	5	-14731	-2318.56	33720	6735.07	2.905	Si
SLU 82	7.1	-17571	2768.9	40220	6939.56	2.506	Si
SLU 77	5	-15065	-2162.48	34483	6777.43	3.134	Si
SLU 77	7.1	-17571	2609.72	40220	6939.56	2.659	Si
SLU 81	5	-14907	-2258.08	34122	6758.02	2.993	Si
SLU 81	7.1	-17675	2761.5	40458	6940.33	2.513	Si
SLU 75	5	-14657	-2220.61	33549	6724.95	3.028	Si
SLU 75	7.1	-17242	2623.42	39467	6933.98	2.643	Si
SLU 76	5	-14422	-2238.94	33012	6691.44	2.989	Si
SLU 76	7.1	-17005	2592.69	38924	6927.01	2.672	Si
SLU 83	5	-15139	-2260.43	34654	6786.22	3.002	Si
SLU 83	7.1	-17900	2755.21	40973	6940.39	2.519	Si
SLU 78	5	-14889	-2222.96	34081	6755.7	3.039	Si
SLU 78	7.1	-17467	2617.12	39982	6938.31	2.651	Si
SLU 84	5	-14963	-2320.9	34251	6765.07	2.915	Si
SLU 84	7.1	-17796	2762.61	40735	6940.64	2.512	Si
SLU 73	5	-14190	-2236.59	32480	6655.93	2.976	Si
SLU 73	7.1	-16780	2598.98	38409	6918.12	2.662	Si
SLU 74	5	-14833	-2160.13	33952	6748.46	3.124	Si
SLU 74	7.1	-17346	2616.02	39705	6936.26	2.651	Si

Verifica a pressoflessione nel piano secondo D.M. 17-01-18 NTC §7.8.2.2.1 in combinazioni sismiche, γM = 2

Comb.	Quota	N	M	σ0	Mu	c.s.	Verifica
SLV 4	5	-11963	2062.15	27383	7241.14	3.511	Si
SLV 4	7.1	-7598	-1893.59	17392	5083.92	2.685	Si
SLV 15	5	-6179	-5164.09	0	0	0	No, e>l/2
SLV 15	7.1	-13747	5102.09	31467	7962.6	1.561	Si

Comb.	Quota	N	M	σ0	Mu	c.s.	Verifica
SLV 11	5	-4945	-2891.22	11320	3500.63	1.211	Si
SLV 11	7.1	-8754	2388.59	20038	5709.35	2.39	Si
SLV 12	5	-4945	-2891.22	11320	3500.63	1.211	Si
SLV 12	7.1	-8754	2388.59	20038	5709.35	2.39	Si
SLV 14	5	-8971	-4944.4	20534	5822.3	1.178	Si
SLV 14	7.1	-16182	5329.25	37040	8797.17	1.651	Si
SLV 9	5	-14253	-2158.91	32625	8150.31	3.775	Si
SLV 9	7.1	-16871	3145.77	38617	9001.82	2.862	Si
SLV 3	5	-11963	2062.15	27383	7241.14	3.511	Si
SLV 3	7.1	-7598	-1893.59	17392	5083.92	2.685	Si
SLV 13	5	-8971	-4944.4	20534	5822.3	1.178	Si
SLV 13	7.1	-16182	5329.25	37040	8797.17	1.651	Si
SLV 16	5	-6179	-5164.09	0	0	0	No, e>l/2
SLV 16	7.1	-13747	5102.09	31467	7962.6	1.561	Si
SLV 10	5	-14253	-2158.91	32625	8150.31	3.775	Si
SLV 10	7.1	-16871	3145.77	38617	9001.82	2.862	Si

Verifica a taglio nel piano secondo D.M. 17-01-18 (N.T.C.) §7.8.2.2.2 con rottura per scorrimento in combinazioni non sismiche, γM = 3

Comb.	Quota	N	V par	M	σ0	σN	l'	fvd	Vt scorr.	Vt fess.diag.	Vt,lim	c.s.	Verifica
SLU 81	5	-14907	-3943	-2258.08		34122	1.5603	10105	4415			1.12	Si
SLU 81	7.1	-17675	-4134	2761.5		40458	1.5603	10833	4733			1.14	Si
SLU 83	5	-15139	-3940	-2260.43		34654	1.5603	10176	4446			1.13	Si
SLU 83	7.1	-17900	-4122	2755.21		40973	1.5603	10833	4733			1.15	Si
SLU 82	5	-14731	-4004	-2318.56		33720	1.5603	10052	4391			1.1	Si
SLU 82	7.1	-17571	-4206	2768.9		40220	1.5603	10833	4733			1.13	Si
SLU 76	5	-14422	-3836	-2238.94		33012	1.5603	9957	4350			1.13	Si
SLU 76	7.1	-17005	-4023	2592.69		38924	1.5603	10745	4694			1.17	Si
SLU 40	5	-12057	-3507	-2035.14		27597	1.5603	9235	4035			1.15	Si
SLU 40	7.1	-14804	-3686	2434.03		33886	1.5603	10074	4401			1.19	Si
SLU 84	5	-14963	-4001	-2320.9		34251	1.5603	10122	4422			1.11	Si
SLU 84	7.1	-17796	-4194	2762.61		40735	1.5603	10833	4733			1.13	Si
SLU 78	5	-14889	-3837	-2222.96		34081	1.5603	10100	4412			1.15	Si
SLU 78	7.1	-17467	-4014	2617.12		39982	1.5603	10833	4733			1.18	Si
SLU 73	5	-14190	-3839	-2236.59		32480	1.5603	9886	4319			1.13	Si
SLU 73	7.1	-16780	-4034	2598.98		38409	1.5603	10677	4664			1.16	Si
SLU 75	5	-14657	-3841	-2220.61		33549	1.5603	10029	4381			1.14	Si
SLU 75	7.1	-17242	-4025	2623.42		39467	1.5603	10818	4726			1.17	Si
SLU 80	5	-14771	-3792	-2200.96		33812	1.5603	10064	4397			1.16	Si
SLU 80	7.1	-17299	-3964	2581.46		39598	1.5603	10833	4733			1.19	Si

Verifica a taglio nel piano secondo D.M. 17-01-18 (N.T.C.) §7.8.2.2.2 con rottura per scorrimento in combinazioni sismiche, γM = 2

Comb.	Quota	N	V par	M	σ0	σN	l'	fvd	Vt scorr.	Vt fess.diag.	Vt,lim	c.s.	Verifica
SLV 15	5	-6179	-8142	-5164.09		0	0	8333	0			0	No, Vu<V
SLV 15	7.1	-13747	-7320	5102.09		40014	1.227	16250	5583			0.76	No, Vu<V
SLV 11	5	-4945	-3131	-2891.22		30114	0.5865	14356	2358			0.75	No, Vu<V
SLV 11	7.1	-8754	-2874	2388.59		20544	1.5218	12442	5302			1.84	Si
SLV 13	5	-8971	-8855	-4944.4		46642	0.6869	16250	3125			0.35	No, Vu<V
SLV 13	7.1	-16182	-8094	5329.25		42734	1.3524	16250	6153			0.76	No, Vu<V
SLV 14	5	-8971	-8855	-4944.4		46642	0.6869	16250	3125			0.35	No, Vu<V
SLV 14	7.1	-16182	-8094	5329.25		42734	1.3524	16250	6153			0.76	No, Vu<V
SLV 16	5	-6179	-8142	-5164.09		0	0	8333	0			0	No, Vu<V
SLV 16	7.1	-13747	-7320	5102.09		40014	1.227	16250	5583			0.76	No, Vu<V
SLV 10	5	-14253	-5510	-2158.91		32625	1.5603	14858	6491			1.18	Si
SLV 10	7.1	-16871	-5455	3145.77		38617	1.5603	16057	7015			1.29	Si
SLV 9	5	-14253	-5510	-2158.91		32625	1.5603	14858	6491			1.18	Si
SLV 9	7.1	-16871	-5455	3145.77		38617	1.5603	16057	7015			1.29	Si
SLV 3	5	-11963	3796	2062.15		27383	1.5603	13810	6033			1.59	Si
SLV 3	7.1	-7598	2802	-1893.59		17392	1.5603	11812	5160			1.84	Si
SLV 4	5	-11963	3796	2062.15		27383	1.5603	13810	6033			1.59	Si
SLV 4	7.1	-7598	2802	-1893.59		17392	1.5603	11812	5160			1.84	Si
SLV 12	5	-4945	-3131	-2891.22		30114	0.5865	14356	2358			0.75	No, Vu<V
SLV 12	7.1	-8754	-2874	2388.59		20544	1.5218	12442	5302			1.84	Si

Verifica a pressoflessione fuori piano D.M. 17-01-18 (N.T.C.)

quota 6.775 Wa 0.05 denominatore 8 γM = 2

Comb.	fd	Sa	σ0	N	M	Mc	Coeff.s.	Verifica
SLV 8	143750	0.39	16419	-7173	162.93	869.26	5.34	Si
SLV 7	143750	0.39	16419	-7173	162.93	869.26	5.34	Si
SLV 4	143750	0.39	17929	-7833	162.93	935.69	5.74	Si
SLV 3	143750	0.39	17929	-7833	162.93	935.69	5.74	Si
SLV 12	143750	0.39	20707	-9046	162.93	1051.87	6.46	Si
SLV 11	143750	0.39	20707	-9046	162.93	1051.87	6.46	Si
SLV 2	143750	0.39	23513	-10272	162.93	1161.38	7.13	Si
SLV 1	143750	0.39	23513	-10272	162.93	1161.38	7.13	Si
SLV 15	143750	0.39	32225	-14078	162.93	1451.16	8.91	Si
SLV 16	143750	0.39	32225	-14078	162.93	1451.16	8.91	Si

Verifica dei meccanismi locali di collasso con analisi cinematica lineare

forza di aggancio al piano = 0 quota mezzeria = 6.775 Wa = 0.05 Ta = 0.0752

Comb.	N top	N base	V orto	α0	M*	e*	a0*	aLim	Verifica
SLV 12	-5350	-4945	-257	0.01	766.9	0.924	0.14989	8.10374	No
SLV 11	-5350	-4945	-257	0.01	766.9	0.924	0.14989	8.10374	No
SLV 7	-6196	-6681	-209	0.019	852.2	0.93	0.29899	8.10374	No
SLV 8	-6196	-6681	-209	0.019	852.2	0.93	0.29899	8.10374	No
SLV 6	-10704	-15988	258	0.023	1308.9	0.951	0.34594	8.10374	No
SLV 5	-10704	-15988	258	0.023	1308.9	0.951	0.34594	8.10374	No
SLV 16	-5940	-6179	-149	0.027	826.4	0.928	0.41736	9.20386	No
SLV 15	-5940	-6179	-149	0.027	826.4	0.928	0.41736	9.20386	No
SLV 9	-9857	-14253	211	0.026	1223	0.948	0.39252	8.10374	No

Comb.	N top	N base	V orto	α0	M*	e*	a0*	aLim	Verifica
SLV 10	-9857	-14253	211	0.026	1223	0.948	0.39252	8.10374	No

Tabella dei coefficienti di sicurezza minimi

Stato limite	Coeff.s.	Comb.	Verifica
PF_SLU	2.506	SLU 82	Si
V_SLU	1.097	SLU 82	Si
PF_SLV	0	SLV 15	No
V_SLV	0	SLV 15	No
PFFP_SLV	5.335	SLV 7	Si
R_SLV	0.018	SLV 11	No

Maschio 117

Verifiche condotte secondo D.M. 17-01-18 (N.T.C.)

Dati geometrici

X ini.	Y ini.	X fin.	Y fin.	Quota i.	Quota.s	l	Sp.	h netta	h ini.	h fin.	a	a.s.,sx	a.s.,dx
-16.968	-4.696	-16.697	-4.696	L4	L5	0.271	0.3	3.55	3.55	3.55			

Caratteristiche del materiale

(Circolare 7 21-01-19 C8.5.I) Muratura in mattoni pieni e malta di calce LC2_Corti

fb	fk	fvk0	fmedio	τ0	fv0	μ	ϕ	fv,lim	E	G	FC
600000			345000	9000	20000	0.58	0.77	32500	320000000	128000000	1.2

Verifica a pressoflessione nel piano secondo D.M. 17-01-18 NTC §7.8.2.2.1 in combinazioni non sismiche, γM = 3

Comb.	Quota	N	M	σ0	Mu	c.s.	Verifica
SLU 65	5	-4193	-15.33	51532	208.9	13.632	Si
SLU 65	8.11	-3145	59.13	38658	224.13	3.79	Si
SLU 34	5	-3789	-16.53	46568	220.09	13.317	Si
SLU 34	8.11	-2987	59.71	36710	222.52	3.727	Si
SLU 76	5	-4631	-20.08	56909	189.25	9.427	Si
SLU 76	8.11	-3461	66.36	42535	224.27	3.38	Si
SLU 84	5	-4826	-27.31	59309	177.95	6.515	Si
SLU 84	8.11	-3287	61.68	40401	224.7	3.643	Si
SLU 73	5	-4524	-23.37	55606	194.73	8.333	Si
SLU 73	8.11	-3355	66.2	41237	224.68	3.394	Si
SLU 31	5	-3683	-19.82	45265	221.92	11.197	Si
SLU 31	8.11	-2881	59.56	35413	220.88	3.709	Si
SLU 55	5	-4313	-15.68	53010	204.28	13.03	Si
SLU 55	8.11	-3259	61.19	40052	224.65	3.671	Si
SLU 82	5	-4720	-30.6	58005	184.28	6.021	Si
SLU 82	8.11	-3182	61.53	39104	224.35	3.646	Si
SLU 52	5	-4207	-18.97	51706	208.39	10.985	Si
SLU 52	8.11	-3153	61.04	38754	224.18	3.673	Si
SLU 68	5	-4299	-12.03	52835	204.86	17.026	Si
SLU 68	8.11	-3251	59.29	39955	224.63	3.789	Si

Verifica a pressoflessione nel piano secondo D.M. 17-01-18 NTC §7.8.2.2.1 in combinazioni sismiche, γM = 2

Comb.	Quota	N	M	σ0	Mu	c.s.	Verifica
SLV 7	5	-1710	-85.4	21013	191.99	2.248	Si
SLV 7	8.11	-8051	313.81	98941	207.71	0.662	No, M>Mu
SLV 9	5	-4996	44.59	61396	337.06	7.559	Si
SLV 9	8.11	4194	-250.69	0	0	0	No, Trazione
SLV 11	5	-1720	57.36	21139	192.9	3.363	Si
SLV 11	8.11	-6858	303.36	84284	288.5	0.951	No, M>Mu
SLV 10	5	-4996	44.59	61396	337.06	7.559	Si
SLV 10	8.11	4194	-250.69	0	0	0	No, Trazione
SLV 14	5	-3861	215.62	47453	320.26	1.485	Si
SLV 14	8.11	1717	-68.97	0	0	0	No, Trazione
SLV 12	5	-1720	57.36	21139	192.9	3.363	Si
SLV 12	8.11	-6858	303.36	84284	288.5	0.951	No, M>Mu
SLV 5	5	-4985	-98.18	61269	337.06	3.433	Si
SLV 5	8.11	3001	-240.24	0	0	0	No, Trazione
SLV 6	5	-4985	-98.18	61269	337.06	3.433	Si
SLV 6	8.11	3001	-240.24	0	0	0	No, Trazione
SLV 13	5	-3861	215.62	47453	320.26	1.485	Si
SLV 13	8.11	1717	-68.97	0	0	0	No, Trazione
SLV 8	5	-1710	-85.4	21013	191.99	2.248	Si
SLV 8	8.11	-8051	313.81	98941	207.71	0.662	No, M>Mu

Verifica a taglio nel piano secondo D.M. 17-01-18 (N.T.C.) §7.8.2.2.2 con rottura per scorrimento in combinazioni non sismiche, γM = 3

Comb.	Quota	N	V par	M	σ0	σN	l'	fvd	Vt scorr.	Vt fess.diag.	Vt,lim	c.s.	Verifica
SLU 65	5	-4193	-32	-15.33		51532	0.2712	10833	881			27.25	Si
SLU 65	8.11	-3145	-311	59.13		38658	0.2712	10710	871			2.8	Si
SLU 80	5	-4790	-18	-20.57		58866	0.2712	10833	881			50	Si
SLU 80	8.11	-3303	-322	58.81		40593	0.2712	10833	881			2.74	Si
SLU 78	5	-4796	-17	-21.58		58937	0.2712	10833	881			51.26	Si
SLU 78	8.11	-3293	-319	58.85		40473	0.2712	10833	881			2.76	Si
SLU 84	5	-4826	-19	-27.31		59309	0.2712	10833	881			46.22	Si
SLU 84	8.11	-3287	-314	61.68		40401	0.2712	10833	881			2.8	Si
SLU 26	5	-3458	-35	-8.48		42494	0.2712	10833	881			25.45	Si
SLU 26	8.11	-2777	-291	52.64		34131	0.2712	10106	822			2.83	Si
SLU 55	5	-4313	-34	-15.68		53010	0.2712	10833	881			26.1	Si
SLU 55	8.11	-3259	-321	61.19		40052	0.2712	10833	881			2.74	Si
SLU 73	5	-4524	-35	-23.37		55606	0.2712	10833	881			25.21	Si
SLU 73	8.11	-3355	-331	66.2		41237	0.2712	10833	881			2.67	Si

Comb.	Quota	N	V par	M	σ0	σN	l'	fvd	Vt scorr.	Vt fess.diag.	Vt,lim	c.s.	Verifica
SLU 76	5	-4631	-35	-20.08		56909	0.2712	10833	881			25.44	Si
SLU 76	8.11	-3461	-346	66.36		42535	0.2712	10833	881			2.54	Si
SLU 68	5	-4299	-32	-12.03		52835	0.2712	10833	881			27.52	Si
SLU 68	8.11	-3251	-327	59.29		39955	0.2712	10833	881			2.7	Si
SLU 34	5	-3789	-37	-16.53		46568	0.2712	10833	881			23.66	Si
SLU 34	8.11	-2987	-310	59.71		36710	0.2712	10450	850			2.74	Si

Verifica a taglio nel piano secondo D.M. 17-01-18 (N.T.C.) §7.8.2.2.2 con rottura per scorrimento in combinazioni sismiche, γM = 2

Comb.	Quota	N	V par	M	σ0	σN	l'	fvd	Vt scorr.	Vt fess.diag.	Vt,lim	c.s.	Verifica
SLV 13	5	-3861	310	215.62		53783	0.2393	16250	1167			3.77	Si
SLV 13	8.11	1717	-493	-68.97		0	0	8333	0			0	No, Vu<V
SLV 12	5	-1720	-305	57.36		21139	0.2712	12561	1022			3.35	Si
SLV 12	8.11	-6858	-604	303.36		84284	0.2712	16250	1322			2.19	Si
SLV 10	5	-4996	434	44.59		61396	0.2712	16250	1322			3.05	Si
SLV 10	8.11	4194	26	-250.69		0	0	8333	0			0	No, Vu<V
SLV 14	5	-3861	310	215.62		53783	0.2393	16250	1167			3.77	Si
SLV 14	8.11	1717	-493	-68.97		0	0	8333	0			0	No, Vu<V
SLV 16	5	-2878	88	219.45		53868	0.1781	16250	868			9.87	Si
SLV 16	8.11	-1598	-682	97.24		23751	0.2243	13084	880			1.29	Si
SLV 11	5	-1720	-305	57.36		21139	0.2712	12561	1022			3.35	Si
SLV 11	8.11	-6858	-604	303.36		84284	0.2712	16250	1322			2.19	Si
SLV 5	5	-4985	319	-98.18		61269	0.2712	16250	1322			4.15	Si
SLV 5	8.11	3001	281	-240.24		0	0	8333	0			0	No, Vu<V
SLV 15	5	-2878	88	219.45		53868	0.1781	16250	868			9.87	Si
SLV 15	8.11	-1598	-682	97.24		23751	0.2243	13084	880			1.29	Si
SLV 9	5	-4996	434	44.59		61396	0.2712	16250	1322			3.05	Si
SLV 9	8.11	4194	26	-250.69		0	0	8333	0			0	No, Vu<V
SLV 6	5	-4985	319	-98.18		61269	0.2712	16250	1322			4.15	Si
SLV 6	8.11	3001	281	-240.24		0	0	8333	0			0	No, Vu<V

Verifica a pressoflessione fuori piano D.M. 17-01-18 (N.T.C.)

quota 6.775 Wa 0.05 denominatore 8 γM = 2

Comb.	fd	Sa	σ0	N	M	Mc	Coeff.s.	Verifica
SLV 14	143750	0.39	10453	-851	30.3	116.67	3.85	Si
SLV 13	143750	0.39	10453	-851	30.3	116.67	3.85	Si
SLV 16	143750	0.39	15370	-1251	30.3	164	5.41	Si
SLV 15	143750	0.39	15370	-1251	30.3	164	5.41	Si
SLV 9	143750	0.39	19228	-1565	30.3	197.75	6.53	Si
SLV 10	143750	0.39	19228	-1565	30.3	197.75	6.53	Si
SLV 5	143750	0.39	31666	-2577	30.3	286.32	9.45	Si
SLV 6	143750	0.39	31666	-2577	30.3	286.32	9.45	Si
SLV 11	143750	0.39	35618	-2898	30.3	308	10.17	Si
SLV 12	143750	0.39	35618	-2898	30.3	308	10.17	Si

Verifica dei meccanismi locali di collasso con analisi cinematica lineare

forza di aggancio al piano = 0 quota mezzeria = 6.775 Wa = 0.05 Ta = 0.0702

Comb.	N top	N base	V orto	α0	M*	e*	a0*	aLim	Verifica
SLV 12	-1165	-1720	31	0.028	159.8	0.931	0.43969	7.59393	No
SLV 11	-1165	-1720	31	0.028	159.8	0.931	0.43969	7.59393	No
SLV 8	-1447	-1710	33	0.029	188.3	0.939	0.45568	7.59393	No
SLV 7	-1447	-1710	33	0.029	188.3	0.939	0.45568	7.59393	No
SLV 3	-2160	-2844	17	0.04	260.7	0.954	0.60724	8.55261	No
SLV 4	-2160	-2844	17	0.04	260.7	0.954	0.60724	8.55261	No
SLV 10	-2264	-4996	-21	0.038	271.2	0.956	0.58367	7.59393	No
SLV 9	-2264	-4996	-21	0.038	271.2	0.956	0.58367	7.59393	No
SLV 16	-1220	-2878	11	0.042	165.4	0.932	0.6596	8.55261	No
SLV 15	-1220	-2878	11	0.042	165.4	0.932	0.6596	8.55261	No

Tabella dei coefficienti di sicurezza minimi

Stato limite	Coeff.s.	Comb.	Verifica
PF_SLU	3.38	SLU 76	Si
V_SLU	2.544	SLU 76	Si
PF_SLV	0	SLV 14	No
V_SLV	0	SLV 5	No
PFFP_SLV	3.851	SLV 13	Si
R_SLV	0.058	SLV 11	No

Maschio 118

Verifiche condotte secondo D.M. 17-01-18 (N.T.C.)

Dati geometrici

X ini.	Y ini.	X fin.	Y fin.	Quota i.	Quota.s	l	Sp.	h netta	h ini.	h fin.	a	a.s.,sx	a.s.,dx
-14.857	-4.696	-13.727	-4.696	L4	L5	1.129	0.3	3.55	3.55	3.55			

Caratteristiche del materiale

(Circolare 7 21-01-19 C8.5.I) Muratura in mattoni pieni e malta di calce LC2_Corti

fb	fk	fvk0	fmedio	τ0	fv0	μ	ϕ	fv,lim	E	G	FC
600000			345000	9000	20000	0.58	0.77	32500	320000000	128000000	1.2

Verifica a pressoflessione nel piano secondo D.M. 17-01-18 NTC §7.8.2.2.1 in combinazioni non sismiche, γM = 3

Comb.	Quota	N	M	σ0	Mu	c.s.	Verifica
SLU 82	5	-13070	108.14	38576	3885.59	35.932	Si
SLU 82	8.11	-10249	-225.72	30249	3638.48	16.12	Si
SLU 73	5	-12641	84.4	37307	3868.98	45.84	Si

Comb.	Quota	N	M	σ0	Mu	c.s.	Verifica
SLU 73	8.11	-9920	-216.93	29279	3588.52	16.543	Si
SLU 76	5	-12791	93.47	37752	3875.66	41.465	Si
SLU 76	8.11	-10124	-218.91	29879	3619.95	16.536	Si
SLU 80	5	-13001	109.55	38371	3883.42	35.45	Si
SLU 80	8.11	-10313	-216.72	30438	3647.7	16.831	Si
SLU 78	5	-13050	106.34	38516	3884.98	36.534	Si
SLU 78	8.11	-10346	-216.69	30536	3652.45	16.855	Si
SLU 84	5	-13221	117.21	39021	3889.62	33.186	Si
SLU 84	8.11	-10452	-227.7	30849	3667.18	16.105	Si
SLU 83	5	-13309	127.72	39281	3891.56	30.469	Si
SLU 83	8.11	-10431	-221.45	30787	3664.3	16.547	Si
SLU 40	5	-10665	115	31477	3695.42	32.134	Si
SLU 40	8.11	-8501	-197.72	25090	3321.95	16.801	Si
SLU 42	5	-10816	124.07	31922	3714.29	29.938	Si
SLU 42	8.11	-8704	-199.71	25690	3365.19	16.851	Si
SLU 81	5	-13159	118.66	38836	3888.06	32.767	Si
SLU 81	8.11	-10228	-219.47	30187	3635.43	16.565	Si

Verifica a pressoflessione nel piano secondo D.M. 17-01-18 NTC §7.8.2.2.1 in combinazioni sismiche, γM = 2

Comb.	Quota	N	M	σ0	Mu	c.s.	Verifica
SLV 1	5	-14649	-1494.85	43234	5345.24	3.576	Si
SLV 1	8.11	-9097	-186.94	26848	4008.3	21.442	Si
SLV 4	5	-10589	-1213.16	31252	4450.21	3.668	Si
SLV 4	8.11	-6728	13.38	19858	3182.03	237.843	Si
SLV 2	5	-14649	-1494.85	43234	5345.24	3.576	Si
SLV 2	8.11	-9097	-186.94	26848	4008.3	21.442	Si
SLV 3	5	-10589	-1213.16	31252	4450.21	3.668	Si
SLV 3	8.11	-6728	13.38	19858	3182.03	237.843	Si
SLV 15	5	-3880	1594.93	11452	1985.84	1.245	Si
SLV 15	8.11	-5028	-90.25	14841	2494.68	27.641	Si
SLV 16	5	-3880	1594.93	11452	1985.84	1.245	Si
SLV 16	8.11	-5028	-90.25	14841	2494.68	27.641	Si
SLV 12	5	-1492	940.74	0	0	0	No, e>l/2
SLV 12	8.11	-2860	179.72	8441	1503.51	8.366	Si
SLV 14	5	-7940	1313.24	23434	3623.88	2.759	Si
SLV 14	8.11	-7397	-290.57	21831	3430.8	11.807	Si
SLV 11	5	-1492	940.74	0	0	0	No, e>l/2
SLV 11	8.11	-2860	179.72	8441	1503.51	8.366	Si
SLV 13	5	-7940	1313.24	23434	3623.88	2.759	Si
SLV 13	8.11	-7397	-290.57	21831	3430.8	11.807	Si

Verifica a taglio nel piano secondo D.M. 17-01-18 (N.T.C.) §7.8.2.2.2 con rottura per scorrimento in combinazioni non sismiche, γM = 3

Comb.	Quota	N	V par	M	σ0	σN	I'	fvd	Vt scorr.	Vt fess.diag.	Vt,lim	c.s.	Verifica
SLU 83	5	-13309	137	127.72		39281	1.1294	10793	3657			26.67	Si
SLU 83	8.11	-10431	-252	-221.45		30787	1.1294	9660	3273			12.99	Si
SLU 61	5	-12370	40	64.91		36509	1.1294	10423	3532			88.25	Si
SLU 61	8.11	-9544	-245	-200.06		28167	1.1294	9311	3155			12.89	Si
SLU 62	5	-12609	68	84.49		37215	1.1294	10518	3564			52.22	Si
SLU 62	8.11	-9726	-251	-195.79		28705	1.1294	9383	3179			12.68	Si
SLU 56	5	-12438	73	73.63		36710	1.1294	10450	3541			48.78	Si
SLU 56	8.11	-9620	-247	-184.79		28393	1.1294	9341	3165			12.81	Si
SLU 81	5	-13159	109	118.66		38836	1.1294	10734	3637			33.29	Si
SLU 81	8.11	-10228	-251	-219.47		30187	1.1294	9580	3246			12.96	Si
SLU 58	5	-12389	79	76.83		36565	1.1294	10431	3534			44.67	Si
SLU 58	8.11	-9587	-246	-184.82		28294	1.1294	9328	3161			12.86	Si
SLU 54	5	-12199	44	54.04		36005	1.1294	10356	3509			79.1	Si
SLU 54	8.11	-9438	-241	-189.06		27855	1.1294	9270	3141			13.02	Si
SLU 53	5	-12288	45	64.56		36265	1.1294	10391	3521			78.76	Si
SLU 53	8.11	-9417	-246	-182.81		27793	1.1294	9261	3138			12.77	Si
SLU 63	5	-12521	68	73.97		36954	1.1294	10483	3552			52.31	Si
SLU 63	8.11	-9747	-246	-202.04		28767	1.1294	9391	3182			12.92	Si
SLU 60	5	-12459	40	75.42		36770	1.1294	10458	3543			87.8	Si
SLU 60	8.11	-9523	-249	-193.81		28105	1.1294	9303	3152			12.65	Si

Verifica a taglio nel piano secondo D.M. 17-01-18 (N.T.C.) §7.8.2.2.2 con rottura per scorrimento in combinazioni sismiche, γM = 2

Comb.	Quota	N	V par	M	σ0	σN	I'	fvd	Vt scorr.	Vt fess.diag.	Vt,lim	c.s.	Verifica
SLV 12	5	-1492	2777	940.74		0	0	8333	0			0	No, Vu<V
SLV 12	8.11	-2860	763	179.72		8441	1.1294	10022	3396			4.45	Si
SLV 16	5	-3880	4561	1594.93		28056	0.461	13945	1929			0.42	No, Vu<V
SLV 16	8.11	-5028	964	-90.25		14841	1.1294	11301	3829			3.97	Si
SLV 4	5	-10589	-3576	-1213.16		31252	1.1294	14584	4941			1.38	Si
SLV 4	8.11	-6728	-929	13.38		19858	1.1294	12305	4169			4.49	Si
SLV 2	5	-14649	-4487	-1494.85		43234	1.1294	16250	5506			1.23	Si
SLV 2	8.11	-9097	-1325	-186.94		26848	1.1294	13703	4643			3.5	Si
SLV 11	5	-1492	2777	940.74		0	0	8333	0			0	No, Vu<V
SLV 11	8.11	-2860	763	179.72		8441	1.1294	10022	3396			4.45	Si
SLV 3	5	-10589	-3576	-1213.16		31252	1.1294	14584	4941			1.38	Si
SLV 3	8.11	-6728	-929	13.38		19858	1.1294	12305	4169			4.49	Si
SLV 13	5	-7940	3649	1313.24		23434	1.1294	13020	4412			1.21	Si
SLV 13	8.11	-7397	568	-290.57		21831	1.1294	12700	4303			7.57	Si
SLV 1	5	-14649	-4487	-1494.85		43234	1.1294	16250	5506			1.23	Si
SLV 1	8.11	-9097	-1325	-186.94		26848	1.1294	13703	4643			3.5	Si
SLV 15	5	-3880	4561	1594.93		28056	0.461	13945	1929			0.42	No, Vu<V
SLV 15	8.11	-5028	964	-90.25		14841	1.1294	11301	3829			3.97	Si
SLV 14	5	-7940	3649	1313.24		23434	1.1294	13020	4412			1.21	Si
SLV 14	8.11	-7397	568	-290.57		21831	1.1294	12700	4303			7.57	Si

Verifica a pressoflessione fuori piano D.M. 17-01-18 (N.T.C.)

quota 6.775 Wa 0.05 denominatore 8 γM = 2

Comb.	fd	Sa	σ0	N	M	Mc	Coeff.s.	Verifica
SLV 7	143750	0.39	11504	-3898	126.17	529.64	4.2	Si
SLV 8	143750	0.39	11504	-3898	126.17	529.64	4.2	Si
SLV 12	143750	0.39	11651	-3948	126.17	535.68	4.25	Si
SLV 11	143750	0.39	11651	-3948	126.17	535.68	4.25	Si
SLV 4	143750	0.39	20755	-7032	126.17	875.65	6.94	Si
SLV 3	143750	0.39	20755	-7032	126.17	875.65	6.94	Si
SLV 16	143750	0.39	21243	-7198	126.17	891.95	7.07	Si
SLV 15	143750	0.39	21243	-7198	126.17	891.95	7.07	Si
SLV 2	143750	0.39	28830	-9768	126.17	1119.52	8.87	Si
SLV 1	143750	0.39	28830	-9768	126.17	1119.52	8.87	Si

Verifica dei meccanismi locali di collasso con analisi cinematica lineare

forza di aggancio al piano = 0 quota mezzeria = 6.775 Wa = 0.05 Ta = 0.0702

Comb.	N top	N base	V orto	α0	M*	e*	a0*	aLim	Verifica
SLV 14	-7343	-7940	-50	0.042	917.8	0.947	0.64015	8.55261	No
SLV 13	-7343	-7940	-50	0.042	917.8	0.947	0.64015	8.55261	No
SLV 4	-4908	-10589	50	0.041	671.3	0.931	0.64746	8.55261	No
SLV 3	-4908	-10589	50	0.041	671.3	0.931	0.64746	8.55261	No
SLV 1	-6669	-14649	25	0.045	849.5	0.943	0.69314	8.55261	No
SLV 2	-6669	-14649	25	0.045	849.5	0.943	0.69314	8.55261	No
SLV 15	-5581	-3880	-24	0.045	739.3	0.936	0.70545	8.55261	No
SLV 16	-5581	-3880	-24	0.045	739.3	0.936	0.70545	8.55261	No
SLV 10	-9162	-15025	-54	0.041	1102.6	0.955	0.63042	7.59393	No
SLV 9	-9162	-15025	-54	0.041	1102.6	0.955	0.63042	7.59393	No

Tabella dei coefficienti di sicurezza minimi

Stato limite	Coeff.s.	Comb.	Verifica
PF_SLU	16.105	SLU 84	Si
V_SLU	12.645	SLU 60	Si
PF_SLV	0	SLV 11	No
V_SLV	0	SLV 11	No
PFFP_SLV	4.198	SLV 7	Si
R_SLV	0.075	SLV 13	No

Maschio 119

Verifiche condotte secondo D.M. 17-01-18 (N.T.C.)

Dati geometrici

X ini.	Y ini.	X fin.	Y fin.	Quota i.	Quota.s	l	Sp.	h netta	h ini.	h fin.	a	a.s.,sx	a.s.,dx
-15.01	1.141	-15.01	1.423	L4	L5	0.282	0.14	3.55	3.55	3.55			

Caratteristiche del materiale

(Circolare 7 21-01-19 C8.5.I) Muratura in mattoni pieni e malta di calce LC2_Corti

fb	fk	fvk0	fmedio	τ0	fv0	μ	ϕ	fv,lim	E	G	FC
600000			345000	9000	20000	0.58	0.77	32500	320000000	128000000	1.2

Verifica a pressoflessione nel piano secondo D.M. 17-01-18 NTC §7.8.2.2.1 in combinazioni non sismiche, γM = 3

Comb.	Quota	N	M	σ0	Mu	c.s.	Verifica
SLU 58	5	-3171	381.44	80433	5.62	0.015	No, M>Mu
SLU 58	7.1	-550	-238.08	0	0	0	No, e>l/2
SLU 57	5	-3198	382.86	81128	1.83	0.005	No, M>Mu
SLU 57	7.1	-573	-238.13	0	0	0	No, e>l/2
SLU 55	5	-3066	368.87	77770	19.54	0.053	No, M>Mu
SLU 55	7.1	-530	-229.24	0	0	0	No, e>l/2
SLU 60	5	-3142	381.71	79697	9.57	0.025	No, M>Mu
SLU 60	7.1	-531	-235.64	0	0	0	No, e>l/2
SLU 54	5	-3104	372	78726	14.66	0.039	No, M>Mu
SLU 54	7.1	-554	-230.09	0	0	0	No, e>l/2
SLU 1	5	-2101	249.59	53303	102.26	0.41	No, M>Mu
SLU 1	7.1	-378	-153.81	0	0	0	No, e>l/2
SLU 53	5	-3110	373.02	78882	13.85	0.037	No, M>Mu
SLU 53	7.1	-555	-230.58	0	0	0	No, e>l/2
SLU 61	5	-3136	380.68	79541	10.39	0.027	No, M>Mu
SLU 61	7.1	-530	-235.15	0	0	0	No, e>l/2
SLU 59	5	-3165	380.42	80277	6.46	0.017	No, M>Mu
SLU 59	7.1	-549	-237.6	0	0	0	No, e>l/2
SLU 56	5	-3204	383.89	81284	0.97	0.003	No, M>Mu
SLU 56	7.1	-573	-238.61	0	0	0	No, e>l/2

Verifica a pressoflessione nel piano secondo D.M. 17-01-18 NTC §7.8.2.2.1 in combinazioni sismiche, γM = 2

Comb.	Quota	N	M	σ0	Mu	c.s.	Verifica
SLV 12	5	-4852	923.42	0	0	0	No, e>l/2
SLV 12	7.1	1623	-651.33	0	0	0	No, Trazione
SLV 5	5	228	-368.1	0	0	0	No, Trazione
SLV 5	7.1	-2438	309.29	61846	169.53	0.548	No, M>Mu
SLV 11	5	-4852	923.42	0	0	0	No, e>l/2
SLV 11	7.1	1623	-651.33	0	0	0	No, Trazione
SLV 9	5	-151	-253.13	0	0	0	No, e>l/2
SLV 9	7.1	-1967	194.49	49905	163.86	0.843	No, M>Mu
SLV 8	5	-4473	808.45	0	0	0	No, e>l/2
SLV 8	7.1	1152	-536.52	0	0	0	No, Trazione
SLV 6	5	228	-368.1	0	0	0	No, Trazione
SLV 6	7.1	-2438	309.29	61846	169.53	0.548	No, M>Mu
SLV 3	5	-2385	262.53	60505	169.54	0.646	No, M>Mu
SLV 3	7.1	-654	-106.55	0	0	0	No, e>l/2

Comb.	Quota	N	M	σ0	Mu	c.s.	Verifica
SLV 10	5	-151	-253.13	0	0	0	No, e>l/2
SLV 10	7.1	-1967	194.49	49905	163.86	0.843	No, M>Mu
SLV 4	5	-2385	262.53	60505	169.54	0.646	No, M>Mu
SLV 4	7.1	-654	-106.55	0	0	0	No, e>l/2
SLV 7	5	-4473	808.45	0	0	0	No, e>l/2
SLV 7	7.1	1152	-536.52	0	0	0	No, Trazione

Verifica a taglio nel piano secondo D.M. 17-01-18 (N.T.C.) §7.8.2.2.2 con rottura per scorrimento in combinazioni non sismiche, γM = 3

Comb.	Quota	N	V par	M	σ0	σN	l'	fvd	Vt scorr.	Vt fess.diag.	Vt,lim	c.s.	Verifica
SLU 59	5	-3165	487	380.42		365959	0.0618	10833	94			0.19	No, Vu<V
SLU 59	7.1	-549	447	-237.6		0	0	5556	0			0	No, Vu<V
SLU 61	5	-3136	486	380.68		384991	0.0582	10833	88			0.18	No, Vu<V
SLU 61	7.1	-530	445	-235.15		0	0	5556	0			0	No, Vu<V
SLU 54	5	-3104	475	372		352986	0.0628	10833	95			0.2	No, Vu<V
SLU 54	7.1	-554	435	-230.09		0	0	5556	0			0	No, Vu<V
SLU 55	5	-3066	471	368.87		356399	0.0614	10833	93			0.2	No, Vu<V
SLU 55	7.1	-530	432	-229.24		0	0	5556	0			0	No, Vu<V
SLU 58	5	-3171	489	381.44		368271	0.0615	10833	93			0.19	No, Vu<V
SLU 58	7.1	-550	447	-238.08		0	0	5556	0			0	No, Vu<V
SLU 56	5	-3204	492	383.89		363368	0.063	10833	96			0.19	No, Vu<V
SLU 56	7.1	-573	449	-238.61		0	0	5556	0			0	No, Vu<V
SLU 1	5	-2101	318	249.59		227237	0.0661	10833	100			0.31	No, Vu<V
SLU 1	7.1	-378	291	-153.81		0	0	5556	0			0	No, Vu<V
SLU 60	5	-3142	488	381.71		387503	0.0579	10833	88			0.18	No, Vu<V
SLU 60	7.1	-531	445	-235.64		0	0	5556	0			0	No, Vu<V
SLU 53	5	-3110	477	373.02		355246	0.0625	10833	95			0.2	No, Vu<V
SLU 53	7.1	-555	435	-230.58		0	0	5556	0			0	No, Vu<V
SLU 57	5	-3198	490	382.86		361132	0.0633	10833	96			0.2	No, Vu<V
SLU 57	7.1	-573	449	-238.13		0	0	5556	0			0	No, Vu<V

Verifica a taglio nel piano secondo D.M. 17-01-18 (N.T.C.) §7.8.2.2.2 con rottura per scorrimento in combinazioni sismiche, γM = 2

Comb.	Quota	N	V par	M	σ0	σN	l'	fvd	Vt scorr.	Vt fess.diag.	Vt,lim	c.s.	Verifica
SLV 5	5	228	-1011	-368.1		0	0	8333	0			0	No, Vu<V
SLV 5	7.1	-2438	-431	309.29		416443	0.0418	16250	95			0.22	No, Vu<V
SLV 4	5	-2385	422	262.53		184807	0.0922	16250	210			0.5	No, Vu<V
SLV 4	7.1	-654	229	-106.55		0	0	8333	0			0	No, Vu<V
SLV 11	5	-4852	1720	923.42		0	0	8333	0			0	No, Vu<V
SLV 11	7.1	1623	1078	-651.33		0	0	8333	0			0	No, Vu<V
SLV 3	5	-2385	422	262.53		184807	0.0922	16250	210			0.5	No, Vu<V
SLV 3	7.1	-654	229	-106.55		0	0	8333	0			0	No, Vu<V
SLV 8	5	-4473	1531	808.45		0	0	8333	0			0	No, Vu<V
SLV 8	7.1	1152	901	-536.52		0	0	8333	0			0	No, Vu<V
SLV 7	5	-4473	1531	808.45		0	0	8333	0			0	No, Vu<V
SLV 7	7.1	1152	901	-536.52		0	0	8333	0			0	No, Vu<V
SLV 12	5	-4852	1720	923.42		0	0	8333	0			0	No, Vu<V
SLV 12	7.1	1623	1078	-651.33		0	0	8333	0			0	No, Vu<V
SLV 9	5	-151	-822	-253.13		0	0	8333	0			0	No, Vu<V
SLV 9	7.1	-1967	-255	194.49		111689	0.1258	16250	286			1.12	Si
SLV 6	5	228	-1011	-368.1		0	0	8333	0			0	No, Vu<V
SLV 6	7.1	-2438	-431	309.29		416443	0.0418	16250	95			0.22	No, Vu<V
SLV 10	5	-151	-822	-253.13		0	0	8333	0			0	No, Vu<V
SLV 10	7.1	-1967	-255	194.49		111689	0.1258	16250	286			1.12	Si

Verifica a pressoflessione fuori piano D.M. 17-01-18 (N.T.C.)

quota 6.775 Wa 0.03 denominatore 8 γM = 2

Comb.	fd	Sa	σ0	N	M	Mc	Coeff.s.	Verifica
SLV 12	143750	0.39	0	937	15.73	0	0	No, Trazione
SLV 8	143750	0.39	0	576	15.73	0	0	No, Trazione
SLV 7	143750	0.39	0	576	15.73	0	0	No, Trazione
SLV 16	143750	0.39	0	352	15.73	0	0	No, Trazione
SLV 15	143750	0.39	0	352	15.73	0	0	No, Trazione
SLV 11	143750	0.39	0	937	15.73	0	0	No, Trazione
SLV 13	143750	0.39	12951	-511	15.73	31.95	2.03	Si
SLV 14	143750	0.39	12951	-511	15.73	31.95	2.03	Si
SLV 4	143750	0.39	21610	-852	15.73	49.09	3.12	Si
SLV 3	143750	0.39	21610	-852	15.73	49.09	3.12	Si

Verifica dei meccanismi locali di collasso con analisi cinematica lineare

forza di aggancio al piano = 0 quota mezzeria = 6.775 Wa = 0.03 Ta = 0.1503

Comb.	N top	N base	V orto	α0	M*	e*	a0*	aLim	Verifica
SLV 6	261	228	2	0	0	0	0	16.55957	No, Trazione
SLV 10	62	-151	2	0	0	0	0	16.55957	No, Trazione
SLV 9	62	-151	2	0	0	0	0	16.55957	No, Trazione
SLV 5	261	228	2	0	0	0	0	16.55957	No, Trazione
SLV 11	-2716	-4852	-2	0.02	296.3	0.979	0.29522	16.55957	No
SLV 12	-2716	-4852	-2	0.02	296.3	0.979	0.29522	16.55957	No
SLV 8	-2518	-4473	-2	0.02	276.1	0.978	0.29733	16.55957	No
SLV 7	-2518	-4473	-2	0.02	276.1	0.978	0.29733	16.55957	No
SLV 15	-1975	-3649	-1	0.02	220.8	0.973	0.30513	16.59692	No
SLV 16	-1975	-3649	-1	0.02	220.8	0.973	0.30513	16.59692	No

Tabella dei coefficienti di sicurezza minimi

Stato limite	Coeff.s.	Comb.	Verifica
PF_SLU	0	SLU 1	No
V_SLU	0	SLU 1	No
PF_SLV	0	SLV 16	No
V_SLV	0	SLV 3	No
PFFP_SLV	0	SLV 16	No
R_SLV	0	SLV 10	No

Maschio 120

Verifiche condotte secondo D.M. 17-01-18 (N.T.C.)

Dati geometrici

X ini.	Y ini.	X fin.	Y fin.	Quota i.	Quota.s	l	Sp.	h netta	h ini.	h fin.	a	a.s.,sx	a.s.,dx
-15.01	2.223	-15.01	6.64	L4	L5	4.417	0.14	3.55	3.55	3.55			

Caratteristiche del materiale

(Circolare 7 21-01-19 C8.5.I) Muratura in mattoni pieni e malta di calce LC2_Corti

fb	fk	fvk0	fmedio	τ0	fv0	μ	ϕ	fv,lim	E	G	FC
600000			345000	9000	20000	0.58	0.77	32500	320000000	128000000	1.2

Verifica a pressoflessione nel piano secondo D.M. 17-01-18 NTC §7.8.2.2.1 in combinazioni non sismiche, γM = 3

Comb.	Quota	N	M	σ0	Mu	c.s.	Verifica
SLU 77	5	-31387	-3699.85	50755	26129.25	7.062	Si
SLU 77	7.1	-27763	-9374.7	44893	27523.83	2.936	Si
SLU 79	5	-31019	-3614.31	50159	26323.55	7.283	Si
SLU 79	7.1	-27392	-9268.76	44295	27601.44	2.978	Si
SLU 74	5	-30792	-3706.06	49792	26437.47	7.134	Si
SLU 74	7.1	-27130	-9216.99	43870	27649.18	3	Si
SLU 81	5	-31167	-3830.48	50399	26246.87	6.852	Si
SLU 81	7.1	-27309	-9407.94	44160	27617.21	2.936	Si
SLU 84	5	-31744	-3810.59	51331	25929.83	6.805	Si
SLU 84	7.1	-27921	-9537.26	45149	27487.03	2.882	Si
SLU 82	5	-31148	-3816.8	50368	26256.67	6.879	Si
SLU 82	7.1	-27288	-9379.55	44126	27621.15	2.945	Si
SLU 80	5	-31000	-3600.63	50129	26333.11	7.313	Si
SLU 80	7.1	-27371	-9240.37	44260	27605.54	2.987	Si
SLU 78	5	-31369	-3686.17	50725	26139.42	7.091	Si
SLU 78	7.1	-27741	-9346.31	44859	27528.62	2.945	Si
SLU 75	5	-30773	-3692.39	49762	26446.66	7.162	Si
SLU 75	7.1	-27108	-9188.6	43836	27652.79	3.009	Si
SLU 83	5	-31763	-3824.27	51362	25919.05	6.778	Si
SLU 83	7.1	-27942	-9565.65	45184	27481.9	2.873	Si

Verifica a pressoflessione nel piano secondo D.M. 17-01-18 NTC §7.8.2.2.1 in combinazioni sismiche, γM = 2

Comb.	Quota	N	M	σ0	Mu	c.s.	Verifica
SLV 5	5	-20766	-11713.55	33580	33260.04	2.839	Si
SLV 5	7.1	-12527	2372.62	20256	23079.96	9.728	Si
SLV 9	5	-19273	-10545.16	31166	31709.73	3.007	Si
SLV 9	7.1	-12970	382.01	20973	23728.7	62.116	Si
SLV 15	5	-18481	2088.9	29885	30834.6	14.761	Si
SLV 15	7.1	-20513	-11731.11	33171	33006.6	2.814	Si
SLV 10	5	-19273	-10545.16	31166	31709.73	3.007	Si
SLV 10	7.1	-12970	382.01	20973	23728.7	62.116	Si
SLV 8	5	-22228	5626.34	35944	34651.43	6.159	Si
SLV 8	7.1	-23336	-12690.05	37736	35623.18	2.807	Si
SLV 6	5	-20766	-11713.55	33580	33260.04	2.839	Si
SLV 6	7.1	-12527	2372.62	20256	23079.96	9.728	Si
SLV 16	5	-18481	2088.9	29885	30834.6	14.761	Si
SLV 16	7.1	-20513	-11731.11	33171	33006.6	2.814	Si
SLV 12	5	-20735	6794.74	33529	33228.7	4.89	Si
SLV 12	7.1	-23780	-14680.67	38453	35991.78	2.452	Si
SLV 7	5	-22228	5626.34	35944	34651.43	6.159	Si
SLV 7	7.1	-23336	-12690.05	37736	35623.18	2.807	Si
SLV 11	5	-20735	6794.74	33529	33228.7	4.89	Si
SLV 11	7.1	-23780	-14680.67	38453	35991.78	2.452	Si

Verifica a taglio nel piano secondo D.M. 17-01-18 (N.T.C.) §7.8.2.2.2 con rottura per scorrimento in combinazioni non sismiche, γM = 3

Comb.	Quota	N	V par	M	σ0	σN	l'	fvd	Vt scorr.	Vt fess.diag.	Vt,lim	c.s.	Verifica
SLU 50	5	-24786	-143	-2681.56		40080	4.4172	10833	6699			46.8	Si
SLU 50	7.1	-21857	-141	-7205.8		35344	4.4172	10268	6350			44.9	Si
SLU 51	5	-24767	-146	-2667.89		40050	4.4172	10833	6699			45.92	Si
SLU 51	7.1	-21836	-144	-7177.42		35310	4.4172	10263	6347			44.02	Si
SLU 59	5	-27892	-145	-3143.31		45103	4.4172	10833	6699			46.32	Si
SLU 59	7.1	-24595	-143	-8238.16		39772	4.4172	10833	6699			46.88	Si
SLU 48	5	-25154	-138	-2767.11		40676	4.4172	10833	6699			48.46	Si
SLU 48	7.1	-22228	-137	-7311.75		35943	4.4172	10348	6399			46.87	Si
SLU 58	5	-27911	-142	-3156.99		45133	4.4172	10833	6699			47.21	Si
SLU 58	7.1	-24617	-140	-8266.55		39806	4.4172	10833	6699			47.8	Si
SLU 80	5	-31000	-142	-3600.63		50129	4.4172	10833	6699			47.13	Si
SLU 80	7.1	-27371	-140	-9240.37		44260	4.4172	10833	6699			47.74	Si
SLU 49	5	-25136	-141	-2753.43		40646	4.4172	10833	6699			47.51	Si
SLU 49	7.1	-22206	-139	-7283.36		35908	4.4172	10343	6396			45.92	Si
SLU 72	5	-27876	-143	-3125.21		45076	4.4172	10833	6699			46.72	Si
SLU 72	7.1	-24612	-142	-8179.63		39798	4.4172	10833	6699			47.31	Si
SLU 47	5	-24159	-140	-2664.98		39067	4.4172	10764	6657			47.54	Si
SLU 47	7.1	-21189	-138	-7000.78		34263	4.4172	10124	6261			45.25	Si
SLU 44	5	-23564	-132	-2671.19		38104	4.4172	10636	6577			49.7	Si
SLU 44	7.1	-20556	-131	-6843.06		33240	4.4172	9988	6176			47.25	Si

Verifica a taglio nel piano secondo D.M. 17-01-18 (N.T.C.) §7.8.2.2.2 con rottura per scorrimento in combinazioni sismiche, γM = 2

Comb.	Quota	N	V par	M	σ0	σN	l'	fvd	Vt scorr.	Vt fess.diag.	Vt,lim	c.s.	Verifica
SLV 8	5	-22228	12548	5626.34		35944	4.4172	15522	9599			0.76	No, Vu<V
SLV 8	7.1	-23336	11556	-12690.05		37736	4.4172	15881	9821			0.85	No, Vu<V

Comb.	Quota	N	V par	M	σ0	σN	l'	fvd	Vt scorr.	Vt fess.diag.	Vt,lim	c.s.	Verifica
SLV 10	5	-19273	-12741	-10545.16		31166	4.4172	14566	9008			0.71	No, Vu<V
SLV 10	7.1	-12970	-11746	382.01		20973	4.4172	12528	7747			0.66	No, Vu<V
SLV 5	5	-20766	-11594	-11713.55		33580	4.4172	15049	9307			0.8	No, Vu<V
SLV 5	7.1	-12527	-10709	2372.62		20256	4.4172	12385	7659			0.72	No, Vu<V
SLV 11	5	-20735	11401	6794.74		33529	4.4172	15039	9300			0.82	No, Vu<V
SLV 11	7.1	-23780	10518	-14680.67		38453	4.4172	16024	9909			0.94	No, Vu<V
SLV 6	5	-20766	-11594	-11713.55		33580	4.4172	15049	9307			0.8	No, Vu<V
SLV 6	7.1	-12527	-10709	2372.62		20256	4.4172	12385	7659			0.72	No, Vu<V
SLV 9	5	-19273	-12741	-10545.16		31166	4.4172	14566	9008			0.71	No, Vu<V
SLV 9	7.1	-12970	-11746	382.01		20973	4.4172	12528	7747			0.66	No, Vu<V
SLV 14	5	-18043	-5630	-3113.07		29176	4.4172	14169	8762			1.56	Si
SLV 14	7.1	-17271	-5165	-7212.31		27927	4.4172	13919	8608			1.67	Si
SLV 7	5	-22228	12548	5626.34		35944	4.4172	15522	9599			0.76	No, Vu<V
SLV 7	7.1	-23336	11556	-12690.05		37736	4.4172	15881	9821			0.85	No, Vu<V
SLV 13	5	-18043	-5630	-3113.07		29176	4.4172	14169	8762			1.56	Si
SLV 13	7.1	-17271	-5165	-7212.31		27927	4.4172	13919	8608			1.67	Si
SLV 12	5	-20735	11401	6794.74		33529	4.4172	15039	9300			0.82	No, Vu<V
SLV 12	7.1	-23780	10518	-14680.67		38453	4.4172	16024	9909			0.94	No, Vu<V

Verifica a pressoflessione fuori piano D.M. 17-01-18 (N.T.C.)

quota 6.775 Wa 0.03 denominatore 8 γM = 2

Comb.	fd	Sa	σ0	N	M	Mc	Coeff.s.	Verifica
SLV 5	143750	0.39	22133	-13687	246.72	784.56	3.18	Si
SLV 6	143750	0.39	22133	-13687	246.72	784.56	3.18	Si
SLV 9	143750	0.39	22403	-13854	246.72	791.99	3.21	Si
SLV 10	143750	0.39	22403	-13854	246.72	791.99	3.21	Si
SLV 1	143750	0.39	27291	-16877	246.72	917.52	3.72	Si
SLV 2	143750	0.39	27291	-16877	246.72	917.52	3.72	Si
SLV 14	143750	0.39	28191	-17433	246.72	938.79	3.81	Si
SLV 13	143750	0.39	28191	-17433	246.72	938.79	3.81	Si
SLV 3	143750	0.39	31982	-19778	246.72	1022.08	4.14	Si
SLV 4	143750	0.39	31982	-19778	246.72	1022.08	4.14	Si

Verifica dei meccanismi locali di collasso con analisi cinematica lineare

forza di aggancio al piano = 0 quota mezzeria = 6.775 Wa = 0.03 Ta = 0.1503

Comb.	N top	N base	V orto	α0	M*	e*	a0*	aLim	Verifica
SLV 12	-14895	-20735	7	0.022	1826.7	0.951	0.33046	16.55957	No
SLV 11	-14895	-20735	7	0.022	1826.7	0.951	0.33046	16.55957	No
SLV 8	-14858	-22228	6	0.022	1823	0.951	0.33107	16.55957	No
SLV 7	-14858	-22228	6	0.022	1823	0.951	0.33107	16.55957	No
SLV 16	-14041	-18481	3	0.022	1740	0.949	0.33663	16.59692	No
SLV 15	-14041	-18481	3	0.022	1740	0.949	0.33663	16.59692	No
SLV 5	-12298	-20766	-7	0.022	1563.2	0.944	0.33802	16.55957	No
SLV 6	-12298	-20766	-7	0.022	1563.2	0.944	0.33802	16.55957	No
SLV 3	-13920	-23458	1	0.022	1727.7	0.948	0.33881	16.59692	No
SLV 4	-13920	-23458	1	0.022	1727.7	0.948	0.33881	16.59692	No

Tabella dei coefficienti di sicurezza minimi

Stato limite	Coeff.s.	Comb.	Verifica
PF_SLU	2.873	SLU 83	Si
V_SLU	44.02	SLU 51	Si
PF_SLV	2.452	SLV 11	Si
V_SLV	0.66	SLV 9	No
PFFP_SLV	3.18	SLV 5	Si
R_SLV	0.02	SLV 11	No

Maschio 121

Verifiche condotte secondo D.M. 17-01-18 (N.T.C.)

Dati geometrici

X ini.	Y ini.	X fin.	Y fin.	Quota i.	Quota.s	l	Sp.	h netta	h ini.	h fin.	a	a.s.,sx	a.s.,dx
-13.727	-4.696	-13.727	-3.323	L4	Z medio 676 cm	1.373	0.28	1.76	1.76	1.76			

Caratteristiche del materiale

(Circolare 7 21-01-19 C8.5.I) Muratura in mattoni pieni e malta di calce LC2_Corti

fb	fk	fvk0	fmedio	τ0	fv0	μ	ϕ	fv,lim	E	G	FC
600000			345000	9000	20000	0.58	0.77	32500	320000000	128000000	1.2

Verifica a pressoflessione nel piano secondo D.M. 17-01-18 NTC §7.8.2.2.1 in combinazioni non sismiche, γM = 3

Comb.	Quota	N	M	σ0	Mu	c.s.	Verifica
SLU 40	5	-14102	150.97	36670	5324.6	35.269	Si
SLU 40	6.76	-11692	462.56	30404	5032.39	10.879	Si
SLU 39	5	-14176	116.51	36863	5329.56	45.744	Si
SLU 39	6.76	-11724	487.67	30486	5037.83	10.33	Si
SLU 74	5	-16757	122.53	43575	5351.76	43.677	Si
SLU 74	6.76	-13817	454.73	35930	5303.33	11.663	Si
SLU 41	5	-14384	126.8	37403	5342.14	42.131	Si
SLU 41	6.76	-11937	483.5	31040	5073.68	10.494	Si
SLU 84	5	-17198	161.98	44720	5326.39	32.883	Si
SLU 84	6.76	-14247	489.61	37049	5334.09	10.895	Si
SLU 42	5	-14310	161.26	37210	5337.86	33.101	Si
SLU 42	6.76	-11906	458.39	30959	5068.54	11.057	Si
SLU 81	5	-17064	117.23	44373	5334.97	45.509	Si
SLU 81	6.76	-14065	518.88	36575	5322.07	10.257	Si

Comb.	Quota	N	M	σ0	Mu	c.s.	Verifica
SLU 82	5	-16990	151.69	44180	5339.41	35.199	Si
SLU 82	6.76	-14034	493.78	36494	5319.85	10.774	Si
SLU 18	5	-12987	80.45	33772	5221.08	64.897	Si
SLU 18	6.76	-10730	415.49	27901	4844.51	11.66	Si
SLU 83	5	-17272	127.52	44912	5321.28	41.729	Si
SLU 83	6.76	-14279	514.71	37130	5336.02	10.367	Si

Verifica a pressoflessione nel piano secondo D.M. 17-01-18 NTC §7.8.2.2.1 in combinazioni sismiche, γM = 2

Comb.	Quota	N	M	σ0	Mu	c.s.	Verifica
SLV 16	5	-8966	121.57	23316	4982.46	40.985	Si
SLV 16	6.76	-7287	629.65	18950	4228.32	6.715	Si
SLV 11	5	-5584	862.98	14519	3378.71	3.915	Si
SLV 11	6.76	-5019	166.22	13052	3078.75	18.522	Si
SLV 15	5	-8966	121.57	23316	4982.46	40.985	Si
SLV 15	6.76	-7287	629.65	18950	4228.32	6.715	Si
SLV 14	5	-12470	-395.1	32427	6290.88	15.922	Si
SLV 14	6.76	-9843	761.35	25594	5343.3	7.018	Si
SLV 10	5	-17263	-859.24	44889	7499.48	8.728	Si
SLV 10	6.76	-13537	605.22	35200	6617.87	10.935	Si
SLV 7	5	-6188	981.81	16090	3689.64	3.758	Si
SLV 7	6.76	-5631	-99.31	14642	3403.3	34.269	Si
SLV 13	5	-12470	-395.1	32427	6290.88	15.922	Si
SLV 13	6.76	-9843	761.35	25594	5343.3	7.018	Si
SLV 8	5	-6188	981.81	16090	3689.64	3.758	Si
SLV 8	6.76	-5631	-99.31	14642	3403.3	34.269	Si
SLV 12	5	-5584	862.98	14519	3378.71	3.915	Si
SLV 12	6.76	-5019	166.22	13052	3078.75	18.522	Si
SLV 9	5	-17263	-859.24	44889	7499.48	8.728	Si
SLV 9	6.76	-13537	605.22	35200	6617.87	10.935	Si

Verifica a taglio nel piano secondo D.M. 17-01-18 (N.T.C.) §7.8.2.2.2 con rottura per scorrimento in combinazioni non sismiche, γM = 3

Comb.	Quota	N	V par	M	σ0	σN	l'	fvd	Vt scorr.	Vt fess.diag.	Vt,lim	c.s.	Verifica
SLU 39	5	-14176	-837	116.51		36863	1.3734	10471	4027			4.81	Si
SLU 39	6.76	-11724	-1009	487.67		30486	1.3734	9620	3700			3.67	Si
SLU 82	5	-16990	-800	151.69		44180	1.3734	10833	4166			5.21	Si
SLU 82	6.76	-14034	-993	493.78		36494	1.3734	10421	4008			4.04	Si
SLU 74	5	-16757	-878	122.53		43575	1.3734	10833	4166			4.75	Si
SLU 74	6.76	-13817	-999	454.73		35930	1.3734	10346	3979			3.98	Si
SLU 60	5	-15875	-855	81.17		41281	1.3734	10833	4166			4.87	Si
SLU 60	6.76	-13072	-992	446.7		33991	1.3734	10088	3879			3.91	Si
SLU 81	5	-17064	-957	117.23		44373	1.3734	10833	4166			4.35	Si
SLU 81	6.76	-14065	-1124	518.88		36575	1.3734	10432	4012			3.57	Si
SLU 62	5	-16083	-830	91.46		41821	1.3734	10833	4166			5.02	Si
SLU 62	6.76	-13285	-956	442.53		34546	1.3734	10162	3908			4.09	Si
SLU 18	5	-12987	-735	80.45		33772	1.3734	10058	3868			5.26	Si
SLU 18	6.76	-10730	-878	415.49		27901	1.3734	9276	3567			4.06	Si
SLU 41	5	-14384	-812	126.8		37403	1.3734	10543	4054			5	Si
SLU 41	6.76	-11937	-973	483.5		31040	1.3734	9694	3728			3.83	Si
SLU 32	5	-13869	-758	121.81		36065	1.3734	10364	3986			5.26	Si
SLU 32	6.76	-11475	-885	423.51		29840	1.3734	9534	3666			4.14	Si
SLU 83	5	-17272	-932	127.52		44912	1.3734	10833	4166			4.47	Si
SLU 83	6.76	-14279	-1088	514.71		37130	1.3734	10506	4040			3.72	Si

Verifica a taglio nel piano secondo D.M. 17-01-18 (N.T.C.) §7.8.2.2.2 con rottura per scorrimento in combinazioni sismiche, γM = 2

Comb.	Quota	N	V par	M	σ0	σN	l'	fvd	Vt scorr.	Vt fess.diag.	Vt,lim	c.s.	Verifica
SLV 15	5	-8966	-2427	121.57		23316	1.3734	12997	4998			2.06	Si
SLV 15	6.76	-7287	-2704	629.65		18950	1.3734	12123	4662			1.72	Si
SLV 3	5	-10980	3569	517.66		28552	1.3734	14044	5401			1.51	Si
SLV 3	6.76	-9325	3543	-255.44		24247	1.3734	13183	5070			1.43	Si
SLV 10	5	-17263	-5354	-859.24		44889	1.3734	16250	6249			1.17	Si
SLV 10	6.76	-13537	-5097	605.22		35200	1.3734	15373	5912			1.16	Si
SLV 4	5	-10980	3569	517.66		28552	1.3734	14044	5401			1.51	Si
SLV 4	6.76	-9325	3543	-255.44		24247	1.3734	13183	5070			1.43	Si
SLV 14	5	-12470	-4747	-395.1		32427	1.3734	14819	5699			1.2	Si
SLV 14	6.76	-9843	-4818	761.35		25594	1.3734	13452	5173			1.07	Si
SLV 16	5	-8966	-2427	121.57		23316	1.3734	12997	4998			2.06	Si
SLV 16	6.76	-7287	-2704	629.65		18950	1.3734	12123	4662			1.72	Si
SLV 8	5	-6188	4176	981.81		16090	1.3734	11551	4442			1.06	Si
SLV 8	6.76	-5631	3822	-99.31		14642	1.3734	11262	4331			1.13	Si
SLV 13	5	-12470	-4747	-395.1		32427	1.3734	14819	5699			1.2	Si
SLV 13	6.76	-9843	-4818	761.35		25594	1.3734	13452	5173			1.07	Si
SLV 7	5	-6188	4176	981.81		16090	1.3734	11551	4442			1.06	Si
SLV 7	6.76	-5631	3822	-99.31		14642	1.3734	11262	4331			1.13	Si
SLV 9	5	-17263	-5354	-859.24		44889	1.3734	16250	6249			1.17	Si
SLV 9	6.76	-13537	-5097	605.22		35200	1.3734	15373	5912			1.16	Si

Verifica a pressoflessione fuori piano D.M. 17-01-18 (N.T.C.)

quota 5.88 Wa 0.05 denominatore 8 γM = 2

Comb.	fd	Sa	σ0	N	M	Mc	Coeff.s.	Verifica
SLV 11	143750	0.37	14513	-5581	34.33	688.55	20.06	Si
SLV 12	143750	0.37	14513	-5581	34.33	688.55	20.06	Si
SLV 8	143750	0.37	15775	-6066	34.33	739.64	21.55	Si
SLV 7	143750	0.37	15775	-6066	34.33	739.64	21.55	Si
SLV 15	143750	0.37	21932	-8434	34.33	968.83	28.22	Si
SLV 16	143750	0.37	21932	-8434	34.33	968.83	28.22	Si
SLV 3	143750	0.37	26137	-10051	34.33	1106.19	32.23	Si
SLV 4	143750	0.37	26137	-10051	34.33	1106.19	32.23	Si
SLV 13	143750	0.37	29552	-11365	34.33	1206.24	35.14	Si
SLV 14	143750	0.37	29552	-11365	34.33	1206.24	35.14	Si

Verifica dei meccanismi locali di collasso con analisi cinematica lineare

forza di aggancio al piano = 0 quota mezzeria = 5.88 Wa = 0.05 Ta = 0.0185

Comb.	N top	N base	V orto	α0	M*	e*	a0*	aLim	Verifica
SLV 12	-5019	-5584	-317	0.032	606.6	0.954	0.48592	3.90153	No
SLV 11	-5019	-5584	-317	0.032	606.6	0.954	0.48592	3.90153	No
SLV 8	-5631	-6188	-256	0.046	668.7	0.958	0.70213	3.90153	No
SLV 7	-5631	-6188	-256	0.046	668.7	0.958	0.70213	3.90153	No
SLV 6	-14148	-17867	345	0.059	1536	0.981	0.88135	3.90153	No
SLV 5	-14148	-17867	345	0.059	1536	0.981	0.88135	3.90153	No
SLV 15	-7287	-8966	-177	0.063	837.3	0.966	0.95209	4.00848	No
SLV 16	-7287	-8966	-177	0.063	837.3	0.966	0.95209	4.00848	No
SLV 10	-13537	-17263	284	0.063	1473.7	0.98	0.93273	3.90153	No
SLV 9	-13537	-17263	284	0.063	1473.7	0.98	0.93273	3.90153	No

Tabella dei coefficienti di sicurezza minimi

Stato limite	Coeff.s.	Comb.	Verifica
PF_SLU	10.257	SLU 81	Si
V_SLU	3.571	SLU 81	Si
PF_SLV	3.758	SLV 7	Si
V_SLV	1.064	SLV 7	Si
PFFP_SLV	20.058	SLV 11	Si
R_SLV	0.125	SLV 11	No

Maschio 122

Verifiche condotte secondo D.M. 17-01-18 (N.T.C.)

Dati geometrici

X ini.	Y ini.	X fin.	Y fin.	Quota i.	Quota.s	l	Sp.	h netta	h ini.	h fin.	a	a.s.,sx	a.s.,dx
-13.727	-4.696	-13.727	-3.323	Z medio 676 cm	L5	1.373	0.28	1.79	1.79	1.79			

Caratteristiche del materiale

(Circolare 7 21-01-19 C8.5.I) Muratura in mattoni pieni e malta di calce LC2_Corti

fb	fk	fvk0	fmedio	τ0	fv0	μ	ϕ	fv,lim	E	G	FC
600000			345000	9000	20000	0.58	0.77	32500	320000000	128000000	1.2

Verifica a pressoflessione nel piano secondo D.M. 17-01-18 NTC §7.8.2.2.1 in combinazioni non sismiche, γM = 3

Comb.	Quota	N	M	σ0	Mu	c.s.	Verifica
SLU 40	6.76	-10606	-338.75	27581	4817.53	14.222	Si
SLU 40	8.55	-9165	223.47	23832	4452.35	19.923	Si
SLU 18	6.76	-9770	-329.71	25406	4616.83	14.003	Si
SLU 18	8.55	-8373	205.93	21772	4212.88	20.458	Si
SLU 83	6.76	-13118	-384.83	34113	5236.08	13.606	Si
SLU 83	8.55	-11280	262.52	29332	4956.88	18.882	Si
SLU 60	6.76	-12041	-366.13	31311	5090.43	13.903	Si
SLU 60	8.55	-10258	229.15	26675	4737.62	20.675	Si
SLU 84	6.76	-13093	-366.31	34047	5233.23	14.286	Si
SLU 84	8.55	-11283	233.64	29340	4957.49	21.218	Si
SLU 41	6.76	-10848	-348.41	28208	4869.74	13.977	Si
SLU 41	8.55	-9394	239.31	24429	4516.61	18.874	Si
SLU 39	6.76	-10632	-357.26	27647	4823.14	13.5	Si
SLU 39	8.55	-9162	252.35	23824	4451.45	17.64	Si
SLU 81	6.76	-12903	-393.69	33551	5210.97	13.236	Si
SLU 81	8.55	-11047	275.57	28727	4910.96	17.821	Si
SLU 62	6.76	-12257	-357.27	31872	5123.69	14.341	Si
SLU 62	8.55	-10491	216.1	27280	4791.6	22.173	Si
SLU 82	6.76	-12877	-375.17	33485	5207.89	13.881	Si
SLU 82	8.55	-11050	246.69	28735	4911.6	19.91	Si

Verifica a pressoflessione nel piano secondo D.M. 17-01-18 NTC §7.8.2.2.1 in combinazioni sismiche, γM = 2

Comb.	Quota	N	M	σ0	Mu	c.s.	Verifica
SLV 15	6.76	-6762	-511.53	17584	3975.39	7.772	Si
SLV 15	8.55	-6400	642.28	16643	3796.49	5.911	Si
SLV 13	6.76	-8994	-1095.35	23387	4994.11	4.559	Si
SLV 13	8.55	-7922	859.82	20599	4522.82	5.26	Si
SLV 16	6.76	-6762	-511.53	17584	3975.39	7.772	Si
SLV 16	8.55	-6400	642.28	16643	3796.49	5.911	Si
SLV 7	6.76	-5673	959.09	14751	3425.34	3.571	Si
SLV 7	8.55	-5260	-381.44	13679	3208.05	8.41	Si
SLV 9	6.76	-12413	-1351.37	32279	6272.47	4.642	Si
SLV 9	8.55	-10039	699.05	26104	5420.92	7.755	Si
SLV 14	6.76	-8994	-1095.35	23387	4994.11	4.559	Si
SLV 14	8.55	-7922	859.82	20599	4522.82	5.26	Si
SLV 10	6.76	-12413	-1351.37	32279	6272.47	4.642	Si
SLV 10	8.55	-10039	699.05	26104	5420.92	7.755	Si
SLV 8	6.76	-5673	959.09	14751	3425.34	3.571	Si
SLV 8	8.55	-5260	-381.44	13679	3208.05	8.41	Si
SLV 11	6.76	-4974	594.7	12934	3054.07	5.135	Si
SLV 11	8.55	-4967	-26.1	12917	3050.54	116.894	Si
SLV 12	6.76	-4974	594.7	12934	3054.07	5.135	Si
SLV 12	8.55	-4967	-26.1	12917	3050.54	116.894	Si

Verifica a taglio nel piano secondo D.M. 17-01-18 (N.T.C.) §7.8.2.2.2 con rottura per scorrimento in combinazioni non sismiche, γM = 3

Comb.	Quota	N	V par	M	σ0	σN	l'	fvd	Vt scorr.	Vt fess.diag.	Vt,lim	c.s.	Verifica
SLU 83	6.76	-13118	-998	-384.83		34113	1.3734	10104	3886			3.89	Si

Comb.	Quota	N	V par	M	σ0	σN	l'	fvd	Vt scorr.	Vt fess.diag.	Vt,lim	c.s.	Verifica
SLU 83	8.55	-11280	-669	262.52		29332	1.3734	9466	3640			5.44	Si
SLU 18	6.76	-9770	-814	-329.71		25406	1.3734	8943	3439			4.23	Si
SLU 18	8.55	-8373	-561	205.93		21772	1.3734	8458	3253			5.8	Si
SLU 60	6.76	-12041	-914	-366.13		31311	1.3734	9730	3742			4.09	Si
SLU 60	8.55	-10258	-628	229.15		26675	1.3734	9112	3504			5.58	Si
SLU 41	6.76	-10848	-897	-348.41		28208	1.3734	9317	3583			3.99	Si
SLU 41	8.55	-9394	-602	239.31		24429	1.3734	8813	3389			5.63	Si
SLU 74	6.76	-12827	-912	-328.72		33354	1.3734	10003	3847			4.22	Si
SLU 74	8.55	-10996	-624	252.57		28593	1.3734	9368	3603			5.78	Si
SLU 39	6.76	-10632	-937	-357.26		27647	1.3734	9242	3554			3.79	Si
SLU 39	8.55	-9162	-658	252.35		23824	1.3734	8732	3358			5.1	Si
SLU 62	6.76	-12257	-875	-357.27		31872	1.3734	9805	3771			4.31	Si
SLU 62	8.55	-10491	-572	216.1		27280	1.3734	9193	3535			6.18	Si
SLU 81	6.76	-12903	-1037	-393.69		33551	1.3734	10029	3857			3.72	Si
SLU 81	8.55	-11047	-726	275.57		28727	1.3734	9386	3609			4.97	Si
SLU 82	6.76	-12877	-914	-375.17		33485	1.3734	10020	3853			4.22	Si
SLU 82	8.55	-11050	-622	246.69		28735	1.3734	9387	3610			5.81	Si
SLU 40	6.76	-10606	-813	-338.75		27581	1.3734	9233	3551			4.37	Si
SLU 40	8.55	-9165	-554	223.47		23832	1.3734	8733	3358			6.06	Si

Verifica a taglio nel piano secondo D.M. 17-01-18 (N.T.C.) §7.8.2.2.2 con rottura per scorrimento in combinazioni sismiche, γM = 2

Comb.	Quota	N	V par	M	σ0	σN	l'	fvd	Vt scorr.	Vt fess.diag.	Vt,lim	c.s.	Verifica
SLV 16	6.76	-6762	-2607	-511.53		17584	1.3734	11850	4557			1.75	Si
SLV 16	8.55	-6400	-2465	642.28		16643	1.3734	11662	4485			1.82	Si
SLV 13	6.76	-8994	-4609	-1095.35		23387	1.3734	13011	5003			1.09	Si
SLV 13	8.55	-7922	-4175	859.82		20599	1.3734	12453	4789			1.15	Si
SLV 4	6.76	-9092	3452	703.07		23643	1.3734	13062	5023			1.46	Si
SLV 4	8.55	-7377	3357	-542.21		19184	1.3734	12170	4680			1.39	Si
SLV 7	6.76	-5673	3667	959.09		14751	1.3734	11284	4339			1.18	Si
SLV 7	8.55	-5260	3314	-381.44		13679	1.3734	11069	4257			1.28	Si
SLV 10	6.76	-12413	-4824	-1351.37		32279	1.3734	14789	5687			1.18	Si
SLV 10	8.55	-10039	-4131	699.05		26104	1.3734	13554	5212			1.26	Si
SLV 3	6.76	-9092	3452	703.07		23643	1.3734	13062	5023			1.46	Si
SLV 3	8.55	-7377	3357	-542.21		19184	1.3734	12170	4680			1.39	Si
SLV 9	6.76	-12413	-4824	-1351.37		32279	1.3734	14789	5687			1.18	Si
SLV 9	8.55	-10039	-4131	699.05		26104	1.3734	13554	5212			1.26	Si
SLV 15	6.76	-6762	-2607	-511.53		17584	1.3734	11850	4557			1.75	Si
SLV 15	8.55	-6400	-2465	642.28		16643	1.3734	11662	4485			1.82	Si
SLV 8	6.76	-5673	3667	959.09		14751	1.3734	11284	4339			1.18	Si
SLV 8	8.55	-5260	3314	-381.44		13679	1.3734	11069	4257			1.28	Si
SLV 14	6.76	-8994	-4609	-1095.35		23387	1.3734	13011	5003			1.09	Si
SLV 14	8.55	-7922	-4175	859.82		20599	1.3734	12453	4789			1.15	Si

Verifica a pressoflessione fuori piano D.M. 17-01-18 (N.T.C.)

quota 7.655 Wa 0.05 denominatore 8 γM = 2

Comb.	fd	Sa	σ0	N	M	Mc	Coeff.s.	Verifica
SLV 11	143750	0.4	12501	-4808	39.09	604.19	15.46	Si
SLV 12	143750	0.4	12501	-4808	39.09	604.19	15.46	Si
SLV 7	143750	0.4	14276	-5490	39.09	678.79	17.37	Si
SLV 8	143750	0.4	14276	-5490	39.09	678.79	17.37	Si
SLV 15	143750	0.4	16439	-6322	39.09	765.97	19.6	Si
SLV 16	143750	0.4	16439	-6322	39.09	765.97	19.6	Si
SLV 13	143750	0.4	21588	-8302	39.09	956.92	24.48	Si
SLV 14	143750	0.4	21588	-8302	39.09	956.92	24.48	Si
SLV 4	143750	0.4	22353	-8596	39.09	983.3	25.16	Si
SLV 3	143750	0.4	22353	-8596	39.09	983.3	25.16	Si

Verifica dei meccanismi locali di collasso con analisi cinematica lineare

forza di aggancio al piano = 0 quota mezzeria = 7.655 Wa = 0.05 Ta = 0.0191

Comb.	N top	N base	V orto	α0	M*	e*	a0*	aLim	Verifica
SLV 2	-8899	-11324	-7	0.083	1002.9	0.97	1.23633	4.34656	No
SLV 1	-8899	-11324	-7	0.083	1002.9	0.97	1.23633	4.34656	No
SLV 14	-7922	-8994	6	0.083	903.4	0.967	1.24944	4.34656	No
SLV 13	-7922	-8994	6	0.083	903.4	0.967	1.24944	4.34656	No
SLV 3	-7377	-9092	-7	0.083	848	0.965	1.25587	4.34656	No
SLV 4	-7377	-9092	-7	0.083	848	0.965	1.25587	4.34656	No
SLV 5	-10332	-13112	-3	0.082	1148.8	0.974	1.22903	4.22636	No
SLV 6	-10332	-13112	-3	0.082	1148.8	0.974	1.22903	4.22636	No
SLV 10	-10039	-12413	1	0.083	1119	0.973	1.23426	4.22636	No
SLV 9	-10039	-12413	1	0.083	1119	0.973	1.23426	4.22636	No

Tabella dei coefficienti di sicurezza minimi

Stato limite	Coeff.s.	Comb.	Verifica
PF_SLU	13.236	SLU 81	Si
V_SLU	3.718	SLU 81	Si
PF_SLV	3.571	SLV 7	Si
V_SLV	1.086	SLV 13	Si
PFFP_SLV	15.458	SLV 11	Si
R_SLV	0.284	SLV 1	No

Maschio 124

Verifiche condotte secondo D.M. 17-01-18 (N.T.C.)

Dati geometrici

X ini.	Y ini.	X fin.	Y fin.	Quota i.	Quota.s	l	Sp.	h netta	h ini.	h fin.	a	a.s.,sx	a.s.,dx

X ini.	Y ini.	X fin.	Y fin.	Quota i.	Quota.s	l	Sp.	h netta	h ini.	h fin.	a	a.s.,sx	a.s.,dx
-13.727	-3.323	-13.727	-0.354	Z medio 588 cm	L5	2.969	0.28	2.67	1.79	3.55			

Caratteristiche del materiale

(Circolare 7 21-01-19 C8.5.I) Muratura in mattoni pieni e malta di calce LC2_Corti

fb	fk	fvk0	fmedio	τ0	fv0	μ	ϕ	fv,lim	E	G	FC
600000			345000	9000	20000	0.58	0.77	32500	320000000	128000000	1.2

Verifica a pressoflessione nel piano secondo D.M. 17-01-18 NTC §7.8.2.2.1 in combinazioni non sismiche, γM = 3

Comb.	Quota	N	M	σ0	Mu	c.s.	Verifica
SLU 80	6.76	-34187	4044.61	41121	25132.79	6.214	Si
SLU 80	8.55	-28273	1406.71	34008	24450.61	17.381	Si
SLU 79	6.76	-34271	4033.79	41222	25131.45	6.23	Si
SLU 79	8.55	-28455	1492.13	34227	24494.43	16.416	Si
SLU 83	6.76	-34946	4258.07	42034	25109.31	5.897	Si
SLU 83	8.55	-29022	1648.01	34908	24621.66	14.94	Si
SLU 74	6.76	-34014	4020	40913	25134.61	6.252	Si
SLU 74	8.55	-28222	1502.11	33947	24438.1	16.269	Si
SLU 78	6.76	-34529	4115.94	41532	25125.36	6.104	Si
SLU 78	8.55	-28601	1446.51	34402	24528.45	16.957	Si
SLU 84	6.76	-34863	4268.89	41934	25113.14	5.883	Si
SLU 84	8.55	-28840	1562.6	34689	24582.35	15.732	Si
SLU 75	6.76	-33930	4030.82	40812	25135.02	6.236	Si
SLU 75	8.55	-28041	1416.7	33728	24392.41	17.218	Si
SLU 81	6.76	-34348	4172.95	41314	25129.93	6.022	Si
SLU 81	8.55	-28462	1618.21	34234	24495.96	15.138	Si
SLU 82	6.76	-34264	4183.77	41214	25131.57	6.007	Si
SLU 82	8.55	-28280	1532.8	34016	24452.18	15.953	Si
SLU 77	6.76	-34612	4105.12	41633	25122.76	6.12	Si
SLU 77	8.55	-28782	1531.92	34620	24569.67	16.039	Si

Verifica a pressoflessione nel piano secondo D.M. 17-01-18 NTC §7.8.2.2.1 in combinazioni sismiche, γM = 2

Comb.	Quota	N	M	σ0	Mu	c.s.	Verifica
SLV 12	6.76	-21340	5056.73	25668	25025.74	4.949	Si
SLV 12	8.55	-13257	-513.44	15946	17112.61	33.329	Si
SLV 3	6.76	-23669	2344.45	28469	26951.31	11.496	Si
SLV 3	8.55	-18812	1612.76	22628	22756.34	14.11	Si
SLV 4	6.76	-23669	2344.45	28469	26951.31	11.496	Si
SLV 4	8.55	-18812	1612.76	22628	22756.34	14.11	Si
SLV 13	6.76	-23050	2644.63	27726	26455.52	10.003	Si
SLV 13	8.55	-19582	47.85	23554	23467.3	490.433	Si
SLV 15	6.76	-21990	4030.22	26450	25578.98	6.347	Si
SLV 15	8.55	-16249	-562.61	19544	20264.07	36.018	Si
SLV 8	6.76	-21844	4551	26274	25455.65	5.593	Si
SLV 8	8.55	-14026	139.17	16871	17947.71	128.964	Si
SLV 11	6.76	-21340	5056.73	25668	25025.74	4.949	Si
SLV 11	8.55	-13257	-513.44	15946	17112.61	33.329	Si
SLV 16	6.76	-21990	4030.22	26450	25578.98	6.347	Si
SLV 16	8.55	-16249	-562.61	19544	20264.07	36.018	Si
SLV 14	6.76	-23050	2644.63	27726	26455.52	10.003	Si
SLV 14	8.55	-19582	47.85	23554	23467.3	490.433	Si
SLV 7	6.76	-21844	4551	26274	25455.65	5.593	Si
SLV 7	8.55	-14026	139.17	16871	17947.71	128.964	Si

Verifica a taglio nel piano secondo D.M. 17-01-18 (N.T.C.) §7.8.2.2.2 con rottura per scorrimento in combinazioni non sismiche, γM = 3

Comb.	Quota	N	V par	M	σ0	σN	l'	fvd	Vt scorr.	Vt fess.diag.	Vt,lim	c.s.	Verifica
SLU 13	6.76	-25105	1540	2946.49		30197	2.9692	9582	7966			5.17	Si
SLU 13	8.55	-20604	837	946.49		24784	2.9692	8860	7366			8.8	Si
SLU 52	6.76	-30003	1666	3297.56		36088	2.9692	10367	8619			5.18	Si
SLU 52	8.55	-24488	875	1007.5		29455	2.9692	9483	7884			9.01	Si
SLU 34	6.76	-28036	1693	3530.51		33722	2.9692	10052	8357			4.94	Si
SLU 34	8.55	-23149	1007	1229.16		27844	2.9692	9268	7705			7.65	Si
SLU 65	6.76	-29961	1586	3159.65		36038	2.9692	10361	8614			5.43	Si
SLU 65	8.55	-24404	997	856.87		29353	2.9692	9469	7873			7.89	Si
SLU 31	6.76	-27437	1697	3445.39		33002	2.9692	9956	8277			4.88	Si
SLU 31	8.55	-22589	985	1199.35		27170	2.9692	9178	7631			7.75	Si
SLU 23	6.76	-24464	1466	2723.46		29426	2.9692	9479	7881			5.38	Si
SLU 23	8.55	-19960	938	766.06		24009	2.9692	8757	7280			7.76	Si
SLU 55	6.76	-30602	1661	3382.68		36808	2.9692	10463	8699			5.24	Si
SLU 55	8.55	-25048	896	1037.3		30128	2.9692	9573	7958			8.88	Si
SLU 76	6.76	-33533	1813	3966.7		40334	2.9692	10833	9007			4.97	Si
SLU 76	8.55	-27592	1066	1319.97		33188	2.9692	9981	8298			7.78	Si
SLU 10	6.76	-24506	1545	2861.37		29477	2.9692	9486	7886			5.1	Si
SLU 10	8.55	-20044	815	916.69		24110	2.9692	8770	7291			8.94	Si
SLU 73	6.76	-32934	1818	3881.58		39614	2.9692	10833	9007			4.96	Si
SLU 73	8.55	-27032	1045	1290.16		32515	2.9692	9891	8223			7.87	Si

Verifica a taglio nel piano secondo D.M. 17-01-18 (N.T.C.) §7.8.2.2.2 con rottura per scorrimento in combinazioni sismiche, γM = 2

Comb.	Quota	N	V par	M	σ0	σN	l'	fvd	Vt scorr.	Vt fess.diag.	Vt,lim	c.s.	Verifica
SLV 10	6.76	-24876	-9505	438.08		29921	2.9692	14318	11903			1.25	Si
SLV 10	8.55	-24368	-5268	1521.44		29311	2.9692	14195	11802			2.24	Si
SLV 12	6.76	-21340	12296	5056.73		25668	2.9692	13467	11196			0.91	No, Vu<V
SLV 12	8.55	-13257	6919	-513.44		15946	2.9692	11522	9579			1.38	Si
SLV 16	6.76	-21990	6325	4030.22		26450	2.9692	13623	11326			1.79	Si
SLV 16	8.55	-16249	3519	-562.61		19544	2.9692	12242	10178			2.89	Si
SLV 6	6.76	-25379	-10927	-67.65		30527	2.9692	14439	12004			1.1	Si
SLV 6	8.55	-25137	-6010	2174.05		30236	2.9692	14380	11956			1.99	Si
SLV 15	6.76	-21990	6325	4030.22		26450	2.9692	13623	11326			1.79	Si
SLV 15	8.55	-16249	3519	-562.61		19544	2.9692	12242	10178			2.89	Si

Comb.	Quota	N	V par	M	σ0	σN	l'	fvd	Vt scorr.	Vt fess.diag.	Vt,lim	c.s.	Verifica
SLV 5	6.76	-25379	-10927	-67.65		30527	2.9692	14439	12004			1.1	Si
SLV 5	8.55	-25137	-6010	2174.05		30236	2.9692	14380	11956			1.99	Si
SLV 7	6.76	-21844	10874	4551		26274	2.9692	13588	11297			1.04	Si
SLV 7	8.55	-14026	6177	139.17		16871	2.9692	11707	9733			1.58	Si
SLV 9	6.76	-24876	-9505	438.08		29921	2.9692	14318	11903			1.25	Si
SLV 9	8.55	-24368	-5268	1521.44		29311	2.9692	14195	11802			2.24	Si
SLV 8	6.76	-21844	10874	4551		26274	2.9692	13588	11297			1.04	Si
SLV 8	8.55	-14026	6177	139.17		16871	2.9692	11707	9733			1.58	Si
SLV 11	6.76	-21340	12296	5056.73		25668	2.9692	13467	11196			0.91	No, Vu<V
SLV 11	8.55	-13257	6919	-513.44		15946	2.9692	11522	9579			1.38	Si

Verifica a pressoflessione fuori piano D.M. 17-01-18 (N.T.C.)

quota 7.655 Wa 0.05 denominatore 8 γM = 2

Comb.	fd	Sa	σ0	N	M	Mc	Coeff.s.	Verifica
SLV 12	143750	0.4	20695	-17205	188	2000.75	10.64	Si
SLV 11	143750	0.4	20695	-17205	188	2000.75	10.64	Si
SLV 7	143750	0.4	21303	-17711	188	2047.24	10.89	Si
SLV 8	143750	0.4	21303	-17711	188	2047.24	10.89	Si
SLV 16	143750	0.4	22880	-19022	188	2164.38	11.51	Si
SLV 15	143750	0.4	22880	-19022	188	2164.38	11.51	Si
SLV 3	143750	0.4	24909	-20708	188	2308.16	12.28	Si
SLV 4	143750	0.4	24909	-20708	188	2308.16	12.28	Si
SLV 14	143750	0.4	25361	-21085	188	2339.18	12.44	Si
SLV 13	143750	0.4	25361	-21085	188	2339.18	12.44	Si

Verifica dei meccanismi locali di collasso con analisi cinematica lineare

forza di aggancio al piano = 0 quota mezzeria = 7.655 Wa = 0.05 Ta = 0.0425

Comb.	N top	N base	V orto	α0	M*	e*	a0*	aLim	Verifica
SLV 8	-14026	-21844	210	0.046	1742	0.948	0.70291	5.55429	No
SLV 7	-14026	-21844	210	0.046	1742	0.948	0.70291	5.55429	No
SLV 4	-18812	-23669	148	0.05	2228.2	0.958	0.76344	5.94534	No
SLV 3	-18812	-23669	148	0.05	2228.2	0.958	0.76344	5.94534	No
SLV 13	-19582	-23050	-113	0.052	2306.5	0.96	0.78799	5.94534	No
SLV 14	-19582	-23050	-113	0.052	2306.5	0.96	0.78799	5.94534	No
SLV 11	-13257	-21340	162	0.049	1664	0.946	0.74786	5.55429	No
SLV 12	-13257	-21340	162	0.049	1664	0.946	0.74786	5.55429	No
SLV 10	-24368	-24876	-175	0.05	2793.5	0.966	0.74852	5.55429	No
SLV 9	-24368	-24876	-175	0.05	2793.5	0.966	0.74852	5.55429	No

Tabella dei coefficienti di sicurezza minimi

Stato limite	Coeff.s.	Comb.	Verifica
PF_SLU	5.883	SLU 84	Si
V_SLU	4.876	SLU 31	Si
PF_SLV	4.949	SLV 11	Si
V_SLV	0.911	SLV 11	No
PFFP_SLV	10.642	SLV 11	Si
R_SLV	0.127	SLV 7	No

Maschio 125

Verifiche condotte secondo D.M. 17-01-18 (N.T.C.)

Dati geometrici

X ini.	Y ini.	X fin.	Y fin.	Quota i.	Quota.s	l	Sp.	h netta	h ini.	h fin.	a	a.s.,sx	a.s.,dx
-13.727	-0.354	-13.727	0	L4	L5	0.354	0.28	3.55	3.55	3.55			

Caratteristiche del materiale

(Circolare 7 21-01-19 C8.5.I) Muratura in mattoni pieni e malta di calce LC2_Corti

fb	fk	fvk0	fmedio	τ0	fv0	μ	ϕ	fv,lim	E	G	FC
600000			345000	9000	20000	0.58	0.77	32500	320000000	128000000	1.2

Verifica a pressoflessione nel piano secondo D.M. 17-01-18 NTC §7.8.2.2.1 in combinazioni non sismiche, γM = 3

Comb.	Quota	N	M	σ0	Mu	c.s.	Verifica
SLU 82	5	-5466	118.94	55174	312.07	2.624	Si
SLU 82	7.1	-6435	186.82	64955	230.68	1.235	Si
SLU 83	5	-5416	89.8	54667	315.16	3.509	Si
SLU 83	7.1	-6772	217.6	68352	192.78	0.886	No, M>Mu
SLU 80	5	-5457	99.47	55077	312.67	3.143	Si
SLU 80	7.1	-6470	196.56	65308	226.97	1.155	Si
SLU 79	5	-5317	72.37	53663	320.97	4.435	Si
SLU 79	7.1	-6650	218.2	67116	207.14	0.949	No, M>Mu
SLU 77	5	-5380	72.86	54301	317.33	4.356	Si
SLU 77	7.1	-6726	220.55	67888	198.24	0.899	No, M>Mu
SLU 78	5	-5520	99.96	55714	308.64	3.088	Si
SLU 78	7.1	-6547	198.91	66080	218.67	1.099	Si
SLU 81	5	-5326	91.84	53760	320.42	3.489	Si
SLU 81	7.1	-6615	208.45	66763	211.12	1.013	Si
SLU 75	5	-5430	102	54807	314.32	3.082	Si
SLU 75	7.1	-6389	189.76	64491	235.47	1.241	Si
SLU 84	5	-5556	116.9	56081	306.25	2.62	Si
SLU 84	7.1	-6593	195.96	66544	213.56	1.09	Si
SLU 74	5	-5290	74.9	53394	322.45	4.305	Si
SLU 74	7.1	-6569	211.4	66299	216.27	1.023	Si

Verifica a pressoflessione nel piano secondo D.M. 17-01-18 NTC §7.8.2.2.1 in combinazioni sismiche, γM = 2

Comb.	Quota	N	M	σ0	Mu	c.s.	Verifica
SLV 12	5	-7792	627.64	78643	491.27	0.783	No, M>Mu
SLV 12	7.1	-250	-380.03	0	0	0	No, e>l/2
SLV 1	5	-1508	-208.93	15223	233.6	1.118	Si
SLV 1	7.1	-6652	411.87	67143	530.2	1.287	Si
SLV 11	5	-7792	627.64	78643	491.27	0.783	No, M>Mu
SLV 11	7.1	-250	-380.03	0	0	0	No, e>l/2
SLV 6	5	512	-546.35	0	0	0	No, Trazione
SLV 6	7.1	-8552	654.62	86320	444.15	0.678	No, M>Mu
SLV 8	5	-7207	579.19	72745	515.97	0.891	No, M>Mu
SLV 8	7.1	-913	-301.32	0	0	0	No, e>l/2
SLV 7	5	-7207	579.19	72745	515.97	0.891	No, M>Mu
SLV 7	7.1	-913	-301.32	0	0	0	No, e>l/2
SLV 10	5	-73	-497.91	0	0	0	No, e>l/2
SLV 10	7.1	-7889	575.9	79628	486.16	0.844	No, M>Mu
SLV 5	5	512	-546.35	0	0	0	No, Trazione
SLV 5	7.1	-8552	654.62	86320	444.15	0.678	No, M>Mu
SLV 9	5	-73	-497.91	0	0	0	No, e>l/2
SLV 9	7.1	-7889	575.9	79628	486.16	0.844	No, M>Mu
SLV 2	5	-1508	-208.93	15223	233.6	1.118	Si
SLV 2	7.1	-6652	411.87	67143	530.2	1.287	Si

Verifica a taglio nel piano secondo D.M. 17-01-18 (N.T.C.) §7.8.2.2.2 con rottura per scorrimento in combinazioni non sismiche, γM = 3

Comb.	Quota	N	V par	M	σ0	σN	I'	fvd	Vt scorr.	Vt fess.diag.	Vt,lim	c.s.	Verifica
SLU 78	5	-5520	113	99.96		55714	0.3538	10833	1073			9.46	Si
SLU 78	7.1	-6547	-1615	198.91		66080	0.3538	10833	1073			0.66	No, Vu<V
SLU 69	5	-4938	-58	36.94		49840	0.3538	10833	1073			18.63	Si
SLU 69	7.1	-6073	-1613	200.6		61296	0.3538	10833	1073			0.67	No, Vu<V
SLU 71	5	-4875	-58	36.46		49202	0.3538	10833	1073			18.66	Si
SLU 71	7.1	-5996	-1595	198.25		60524	0.3538	10833	1073			0.67	No, Vu<V
SLU 80	5	-5457	114	99.47		55077	0.3538	10833	1073			9.45	Si
SLU 80	7.1	-6470	-1597	196.56		65308	0.3538	10833	1073			0.67	No, Vu<V
SLU 83	5	-5416	53	89.8		54667	0.3538	10833	1073			20.31	Si
SLU 83	7.1	-6772	-1759	217.6		68352	0.3538	10833	1073			0.61	No, Vu<V
SLU 84	5	-5556	154	116.9		56081	0.3538	10833	1073			6.98	Si
SLU 84	7.1	-6593	-1599	195.96		66544	0.3538	10833	1073			0.67	No, Vu<V
SLU 79	5	-5317	13	72.37		53663	0.3538	10833	1073			85.48	Si
SLU 79	7.1	-6650	-1758	218.2		67116	0.3538	10833	1073			0.61	No, Vu<V
SLU 77	5	-5380	12	72.86		54301	0.3538	10833	1073			86.14	Si
SLU 77	7.1	-6726	-1775	220.55		67888	0.3538	10833	1073			0.6	No, Vu<V
SLU 74	5	-5290	23	74.9		53394	0.3538	10833	1073			47.22	Si
SLU 74	7.1	-6569	-1707	211.4		66299	0.3538	10833	1073			0.63	No, Vu<V
SLU 81	5	-5326	63	91.84		53760	0.3538	10833	1073			17	Si
SLU 81	7.1	-6615	-1691	208.45		66763	0.3538	10833	1073			0.63	No, Vu<V

Verifica a taglio nel piano secondo D.M. 17-01-18 (N.T.C.) §7.8.2.2.2 con rottura per scorrimento in combinazioni sismiche, γM = 2

Comb.	Quota	N	V par	M	σ0	σN	I'	fvd	Vt scorr.	Vt fess.diag.	Vt,lim	c.s.	Verifica
SLV 7	5	-7207	1766	579.19		88859	0.2897	16250	1318			0.75	No, Vu<V
SLV 7	7.1	-913	2419	-301.32		0	0	8333	0			0	No, Vu<V
SLV 11	5	-7792	2452	627.64		96253	0.2891	16250	1315			0.54	No, Vu<V
SLV 11	7.1	-250	2954	-380.03		0	0	8333	0			0	No, Vu<V
SLV 10	5	-73	-1774	-497.91		0	0	8333	0			0	No, Vu<V
SLV 10	7.1	-7889	-4652	575.9		90374	0.3118	16250	1419			0.3	No, Vu<V
SLV 8	5	-7207	1766	579.19		88859	0.2897	16250	1318			0.75	No, Vu<V
SLV 8	7.1	-913	2419	-301.32		0	0	8333	0			0	No, Vu<V
SLV 6	5	512	-2460	-546.35		0	0	8333	0			0	No, Vu<V
SLV 6	7.1	-8552	-5187	654.62		101429	0.3011	16250	1370			0.26	No, Vu<V
SLV 9	5	-73	-1774	-497.91		0	0	8333	0			0	No, Vu<V
SLV 9	7.1	-7889	-4652	575.9		90374	0.3118	16250	1419			0.3	No, Vu<V
SLV 12	5	-7792	2452	627.64		96253	0.2891	16250	1315			0.54	No, Vu<V
SLV 12	7.1	-250	2954	-380.03		0	0	8333	0			0	No, Vu<V
SLV 5	5	512	-2460	-546.35		0	0	8333	0			0	No, Vu<V
SLV 5	7.1	-8552	-5187	654.62		101429	0.3011	16250	1370			0.26	No, Vu<V
SLV 2	5	-1508	-1782	-208.93		46761	0.1152	16250	524			0.29	No, Vu<V
SLV 2	7.1	-6652	-3148	411.87		68860	0.345	16250	1570			0.5	No, Vu<V
SLV 1	5	-1508	-1782	-208.93		46761	0.1152	16250	524			0.29	No, Vu<V
SLV 1	7.1	-6652	-3148	411.87		68860	0.345	16250	1570			0.5	No, Vu<V

Verifica a pressoflessione fuori piano D.M. 17-01-18 (N.T.C.)

quota 6.775 Wa 0.05 denominatore 8 γM = 2

Comb.	fd	Sa	σ0	N	M	Mc	Coeff.s.	Verifica
SLV 12	143750	0.39	15520	-1538	37.81	187.93	4.97	Si
SLV 11	143750	0.39	15520	-1538	37.81	187.93	4.97	Si
SLV 8	143750	0.39	20903	-2071	37.81	240.34	6.36	Si
SLV 7	143750	0.39	20903	-2071	37.81	240.34	6.36	Si
SLV 16	143750	0.39	25515	-2528	37.81	280	7.41	Si
SLV 15	143750	0.39	25515	-2528	37.81	280	7.41	Si
SLV 13	143750	0.39	39464	-3910	37.81	370.6	9.8	Si
SLV 14	143750	0.39	39464	-3910	37.81	370.6	9.8	Si
SLV 4	143750	0.39	43458	-4306	37.81	388.4	10.27	Si
SLV 3	143750	0.39	43458	-4306	37.81	388.4	10.27	Si

Verifica dei meccanismi locali di collasso con analisi cinematica lineare

forza di aggancio al piano = 0 quota mezzeria = 6.775 Wa = 0.05 Ta = 0.0752

Comb.	N top	N base	V orto	α0	M*	e*	a0*	aLim	Verifica
SLV 9	-539	-73	-78	0	107	0.896	0	8.10374	No
SLV 1	-1376	-1508	220	0	190.3	0.929	0	9.20386	No
SLV 6	-418	512	36	0	0	0	0	8.10374	No, Trazione

Comb.	N top	N base	V orto	α0	M*	e*	a0*	aLim	Verifica
SLV 8	-3558	-7207	183	0	411.7	0.964	0	8.10374	No
SLV 5	-418	512	36	0	0	0	0	8.10374	No, Trazione
SLV 7	-3558	-7207	183	0	411.7	0.964	0	8.10374	No
SLV 2	-1376	-1508	220	0	190.3	0.929	0	9.20386	No
SLV 10	-539	-73	-78	0	107	0.896	0	8.10374	No
SLV 3	-2318	-3824	264	0	285.7	0.95	0	9.20386	No
SLV 4	-2318	-3824	264	0	285.7	0.95	0	9.20386	No

Tabella dei coefficienti di sicurezza minimi

Stato limite	Coeff.s.	Comb.	Verifica
PF_SLU	0.886	SLU 83	No
V_SLU	0.605	SLU 77	No
PF_SLV	0	SLV 6	No
V_SLV	0	SLV 5	No
PFFP_SLV	4.971	SLV 11	Si
R_SLV	0	SLV 6	No

Maschio 126

Verifiche condotte secondo D.M. 17-01-18 (N.T.C.)

Dati geometrici

X ini.	Y ini.	X fin.	Y fin.	Quota i.	Quota.s	l	Sp.	h netta	h ini.	h fin.	a	a.s.,sx	a.s.,dx
-19.663	6.64	-17.793	6.64	L4	L5	1.87	0.28	3.55	3.55	3.55			

Caratteristiche del materiale

(Circolare 7 21-01-19 C8.5.I) Muratura in mattoni pieni e malta di calce LC2_Corti

fb	fk	fvk0	fmedio	τ0	fv0	μ	ϕ	fv,lim	E	G	FC
600000			345000	9000	20000	0.58	0.77	32500	320000000	128000000	1.2

Verifica a pressoflessione nel piano secondo D.M. 17-01-18 NTC §7.8.2.2.1 in combinazioni non sismiche, γM = 3

Comb.	Quota	N	M	σ0	Mu	c.s.	Verifica
SLU 79	5.9	-21197	-532.86	40487	9967.94	18.706	Si
SLU 79	7.8	-20364	1372.63	38894	9948.06	7.247	Si
SLU 83	5.9	-21413	-570.59	40899	9968.12	17.47	Si
SLU 83	7.8	-20681	1412.7	39501	9959.23	7.05	Si
SLU 81	5.9	-20872	-564.85	39865	9963.8	17.64	Si
SLU 81	7.8	-20104	1378.83	38399	9935.68	7.206	Si
SLU 84	5.9	-21401	-569.64	40877	9968.16	17.499	Si
SLU 84	7.8	-20665	1414.7	39471	9958.78	7.039	Si
SLU 77	5.9	-21436	-532.73	40942	9968.02	18.711	Si
SLU 77	7.8	-20615	1386.5	39374	9957.26	7.182	Si
SLU 78	5.9	-21424	-531.78	40920	9968.07	18.745	Si
SLU 78	7.8	-20599	1388.5	39344	9956.75	7.171	Si
SLU 82	5.9	-20860	-563.9	39843	9963.57	17.669	Si
SLU 82	7.8	-20088	1380.83	38369	9934.81	7.195	Si
SLU 75	5.9	-20883	-526.04	39886	9964.02	18.941	Si
SLU 75	7.8	-20022	1354.62	38241	9931.1	7.331	Si
SLU 74	5.9	-20894	-526.99	39908	9964.24	18.908	Si
SLU 74	7.8	-20038	1352.62	38272	9932.01	7.343	Si
SLU 80	5.9	-21185	-531.91	40464	9967.87	18.74	Si
SLU 80	7.8	-20347	1374.63	38864	9947.38	7.236	Si

Verifica a pressoflessione nel piano secondo D.M. 17-01-18 NTC §7.8.2.2.1 in combinazioni sismiche, γM = 2

Comb.	Quota	N	M	σ0	Mu	c.s.	Verifica
SLV 15	5.9	-15988	4953.82	30537	11211.92	2.263	Si
SLV 15	7.8	-7035	-3139.77	13437	5854.02	1.864	Si
SLV 9	5.9	-8776	1421.76	16763	7079.51	4.979	Si
SLV 9	7.8	-7524	-2047.51	14371	6207	3.031	Si
SLV 4	5.9	-15705	-5714.29	29996	11078.35	1.939	Si
SLV 4	7.8	-21721	5857.39	41488	13412.57	2.29	Si
SLV 2	5.9	-12422	-5621.17	23726	9358.62	1.665	Si
SLV 2	7.8	-19575	4908.12	37388	12701.11	2.588	Si
SLV 1	5.9	-12422	-5621.17	23726	9358.62	1.665	Si
SLV 1	7.8	-19575	4908.12	37388	12701.11	2.588	Si
SLV 16	5.9	-15988	4953.82	30537	11211.92	2.263	Si
SLV 16	7.8	-7035	-3139.77	13437	5854.02	1.864	Si
SLV 3	5.9	-15705	-5714.29	29996	11078.35	1.939	Si
SLV 3	7.8	-21721	5857.39	41488	13412.57	2.29	Si
SLV 13	5.9	-12705	5046.95	24267	9519.36	1.886	Si
SLV 13	7.8	-4888	-4089.04	9337	4220.99	1.032	Si
SLV 10	5.9	-8776	1421.76	16763	7079.51	4.979	Si
SLV 10	7.8	-7524	-2047.51	14371	6207	3.031	Si
SLV 14	5.9	-12705	5046.95	24267	9519.36	1.886	Si
SLV 14	7.8	-4888	-4089.04	9337	4220.99	1.032	Si

Verifica a taglio nel piano secondo D.M. 17-01-18 (N.T.C.) §7.8.2.2.2 con rottura per scorrimento in combinazioni non sismiche, γM = 3

Comb.	Quota	N	V par	M	σ0	σN	l'	fvd	Vt scorr.	Vt fess.diag.	Vt,lim	c.s.	Verifica
SLU 84	5.9	-21401	-1818	-569.64		40877	1.8699	10833	5672			3.12	Si
SLU 84	7.8	-20665	-1869	1414.7		39471	1.8699	10818	5664			3.03	Si
SLU 83	5.9	-21413	-1819	-570.59		40899	1.8699	10833	5672			3.12	Si
SLU 83	7.8	-20681	-1872	1412.7		39501	1.8699	10822	5666			3.03	Si
SLU 41	5.9	-18109	-1632	-514.98		34587	1.8699	10167	5323			3.26	Si
SLU 41	7.8	-17770	-1677	1232.75		33941	1.8699	10081	5278			3.15	Si
SLU 42	5.9	-18097	-1631	-514.03		34565	1.8699	10164	5322			3.26	Si
SLU 42	7.8	-17754	-1674	1234.75		33910	1.8699	10077	5276			3.15	Si

Comb.	Quota	N	V par	M	σ0	σN	l'	fvd	Vt scorr.	Vt fess.diag.	Vt,lim	c.s.	Verifica
SLU 80	5.9	-21185	-1728	-531.91		40464	1.8699	10833	5672			3.28	Si
SLU 80	7.8	-20347	-1777	1374.63		38864	1.8699	10737	5622			3.16	Si
SLU 82	5.9	-20860	-1780	-563.9		39843	1.8699	10833	5672			3.19	Si
SLU 82	7.8	-20088	-1830	1380.83		38369	1.8699	10671	5587			3.05	Si
SLU 81	5.9	-20872	-1781	-564.85		39865	1.8699	10833	5672			3.19	Si
SLU 81	7.8	-20104	-1834	1378.83		38399	1.8699	10675	5589			3.05	Si
SLU 79	5.9	-21197	-1728	-532.86		40487	1.8699	10833	5672			3.28	Si
SLU 79	7.8	-20364	-1780	1372.63		38894	1.8699	10741	5624			3.16	Si
SLU 78	5.9	-21424	-1741	-531.78		40920	1.8699	10833	5672			3.26	Si
SLU 78	7.8	-20599	-1791	1388.5		39344	1.8699	10801	5655			3.16	Si
SLU 77	5.9	-21436	-1742	-532.73		40942	1.8699	10833	5672			3.26	Si
SLU 77	7.8	-20615	-1794	1386.5		39374	1.8699	10805	5657			3.15	Si

Verifica a taglio nel piano secondo D.M. 17-01-18 (N.T.C.) §7.8.2.2.2 con rottura per scorrimento in combinazioni sismiche, γM = 2

Comb.	Quota	N	V par	M	σ0	σN	l'	fvd	Vt scorr.	Vt fess.diag.	Vt,lim	c.s.	Verifica
SLV 1	5.9	-12422	-10834	-5621.17		30655	1.4472	14464	5861			0.54	No, Vu<V
SLV 1	7.8	-19575	-10024	4908.12		37388	1.8699	15811	8278			0.83	No, Vu<V
SLV 13	5.9	-12705	7030	5046.95		28130	1.6131	13959	6305			0.9	No, Vu<V
SLV 13	7.8	-4888	6589	-4089.04		59121	0.2953	16250	1344			0.2	No, Vu<V
SLV 4	5.9	-15705	-9171	-5714.29		32739	1.7132	14881	7138			0.78	No, Vu<V
SLV 4	7.8	-21721	-8801	5857.39		41488	1.8699	16250	8508			0.97	No, Vu<V
SLV 15	5.9	-15988	8693	4953.82		30537	1.8699	14441	7561			0.87	No, Vu<V
SLV 15	7.8	-7035	7811	-3139.77		17140	1.4659	11761	4827			0.62	No, Vu<V
SLV 14	5.9	-12705	7030	5046.95		28130	1.6131	13959	6305			0.9	No, Vu<V
SLV 14	7.8	-4888	6589	-4089.04		59121	0.2953	16250	1344			0.2	No, Vu<V
SLV 6	5.9	-8691	-6522	-1778.68		16600	1.8699	11653	6101			0.94	No, Vu<V
SLV 6	7.8	-11930	-5635	651.64		22786	1.8699	12891	6749			1.2	Si
SLV 3	5.9	-15705	-9171	-5714.29		32739	1.7132	14881	7138			0.78	No, Vu<V
SLV 3	7.8	-21721	-8801	5857.39		41488	1.8699	16250	8508			0.97	No, Vu<V
SLV 16	5.9	-15988	8693	4953.82		30537	1.8699	14441	7561			0.87	No, Vu<V
SLV 16	7.8	-7035	7811	-3139.77		17140	1.4659	11761	4827			0.62	No, Vu<V
SLV 2	5.9	-12422	-10834	-5621.17		30655	1.4472	14464	5861			0.54	No, Vu<V
SLV 2	7.8	-19575	-10024	4908.12		37388	1.8699	15811	8278			0.83	No, Vu<V
SLV 5	5.9	-8691	-6522	-1778.68		16600	1.8699	11653	6101			0.94	No, Vu<V
SLV 5	7.8	-11930	-5635	651.64		22786	1.8699	12891	6749			1.2	Si

Verifica a pressoflessione fuori piano D.M. 17-01-18 (N.T.C.)

quota 6.775 Wa 0.05 denominatore 8 γM = 2

Comb.	fd	Sa	σ0	N	M	Mc	Coeff.s.	Verifica
SLV 9	143750	0.39	14795	-7746	195.26	953.13	4.88	Si
SLV 10	143750	0.39	14795	-7746	195.26	953.13	4.88	Si
SLV 13	143750	0.39	17849	-9345	195.26	1117.19	5.72	Si
SLV 14	143750	0.39	17849	-9345	195.26	1117.19	5.72	Si
SLV 6	143750	0.39	18301	-9582	195.26	1140.51	5.84	Si
SLV 5	143750	0.39	18301	-9582	195.26	1140.51	5.84	Si
SLV 16	143750	0.39	23973	-12551	195.26	1412.44	7.23	Si
SLV 15	143750	0.39	23973	-12551	195.26	1412.44	7.23	Si
SLV 2	143750	0.39	29536	-15464	195.26	1641.63	8.41	Si
SLV 1	143750	0.39	29536	-15464	195.26	1641.63	8.41	Si

Verifica dei meccanismi locali di collasso con analisi cinematica lineare

forza di aggancio al piano = 0 quota mezzeria = 6.775 Wa = 0.05 Ta = 0.0752

Comb.	N top	N base	V orto	α0	M*	e*	a0*	aLim	Verifica
SLV 10	-6883	-7758	-158	0.029	966.7	0.927	0.44911	8.10374	No
SLV 9	-6883	-7758	-158	0.029	966.7	0.927	0.44911	8.10374	No
SLV 6	-8809	-9063	-146	0.032	1161.1	0.937	0.49332	8.10374	No
SLV 5	-8809	-9063	-146	0.032	1161.1	0.937	0.49332	8.10374	No
SLV 8	-14867	-19232	158	0.034	1775.8	0.957	0.51477	8.10374	No
SLV 7	-14867	-19232	158	0.034	1775.8	0.957	0.51477	8.10374	No
SLV 11	-12941	-17927	146	0.034	1580.2	0.952	0.51908	8.10374	No
SLV 12	-12941	-17927	146	0.034	1580.2	0.952	0.51908	8.10374	No
SLV 4	-14992	-17195	66	0.039	1788.6	0.957	0.59901	9.20386	No
SLV 3	-14992	-17195	66	0.039	1788.6	0.957	0.59901	9.20386	No

Tabella dei coefficienti di sicurezza minimi

Stato limite	Coeff.s.	Comb.	Verifica
PF_SLU	7.039	SLU 84	Si
V_SLU	3.026	SLU 83	Si
PF_SLV	1.032	SLV 13	Si
V_SLV	0.204	SLV 13	No
PFFP_SLV	4.881	SLV 9	Si
R_SLV	0.055	SLV 9	No

Maschio 127

Verifiche condotte secondo D.M. 17-01-18 (N.T.C.)

Dati geometrici

X ini.	Y ini.	X fin.	Y fin.	Quota i.	Quota.s	l	Sp.	h netta	h ini.	h fin.	a	a.s.,sx	a.s.,dx
-16.793	6.64	-12.868	6.64	L4	L5	3.925	0.28	3.55	3.55	3.55			

Caratteristiche del materiale

(Circolare 7 21-01-19 C8.5.I) Muratura in mattoni pieni e malta di calce LC2_Corti

fb	fk	fvk0	fmedio	τ0	fv0	μ	ϕ	fv,lim	E	G	FC
600000			345000	9000	20000	0.58	0.77	32500	320000000	128000000	1.2

Verifica a pressoflessione nel piano secondo D.M. 17-01-18 NTC §7.8.2.2.1 in combinazioni non sismiche, γM = 3

Comb.	Quota	N	M	σ0	Mu	c.s.	Verifica
SLU 79	5.9	-39452	-901.51	35898	43304.13	48.035	Si
SLU 79	7.8	-36034	-1252.9	32788	42252.43	33.724	Si
SLU 41	5.9	-33763	-639.37	30721	41270.12	64.548	Si
SLU 41	7.8	-31368	-1215.08	28542	39989.77	32.911	Si
SLU 39	5.9	-32714	-589.01	29768	40740.6	69.168	Si
SLU 39	7.8	-30278	-1202.8	27550	39323.43	32.693	Si
SLU 81	5.9	-38797	-781.29	35302	43142.32	55.219	Si
SLU 81	7.8	-35415	-1331.42	32225	42006.98	31.55	Si
SLU 83	5.9	-39846	-831.65	36256	43392.3	52.176	Si
SLU 83	7.8	-36505	-1343.7	33217	42427.74	31.575	Si
SLU 42	5.9	-33773	-630.93	30731	41275.17	65.419	Si
SLU 42	7.8	-31376	-1206.54	28550	39994.62	33.148	Si
SLU 84	5.9	-39856	-823.21	36266	43394.56	52.714	Si
SLU 84	7.8	-36513	-1335.16	33224	42430.73	31.779	Si
SLU 40	5.9	-32725	-580.58	29777	40746.13	70.182	Si
SLU 40	7.8	-30286	-1194.26	27558	39328.68	32.931	Si
SLU 82	5.9	-38808	-772.86	35312	43145.05	55.825	Si
SLU 82	7.8	-35423	-1322.88	32232	42010.37	31.757	Si
SLU 80	5.9	-39463	-893.07	35908	43306.56	48.492	Si
SLU 80	7.8	-36043	-1244.37	32796	42255.59	33.958	Si

Verifica a pressoflessione nel piano secondo D.M. 17-01-18 NTC §7.8.2.2.1 in combinazioni sismiche, γM = 2

Comb.	Quota	N	M	σ0	Mu	c.s.	Verifica
SLV 15	5.9	-25463	18039.15	23169	40495.62	2.245	Si
SLV 15	7.8	-23151	-18331.89	21065	37600.75	2.051	Si
SLV 13	5.9	-19855	18603.32	18067	33204.53	1.785	Si
SLV 13	7.8	-19419	-18158.24	17669	32598.26	1.795	Si
SLV 16	5.9	-25463	18039.15	23169	40495.62	2.245	Si
SLV 16	7.8	-23151	-18331.89	21065	37600.75	2.051	Si
SLV 14	5.9	-19855	18603.32	18067	33204.53	1.785	Si
SLV 14	7.8	-19419	-18158.24	17669	32598.26	1.795	Si
SLV 4	5.9	-32797	-19876.64	29842	48643.93	2.447	Si
SLV 4	7.8	-27510	16589.36	25032	42927.97	2.588	Si
SLV 9	5.9	-15880	5990.99	14449	27478.88	4.587	Si
SLV 9	7.8	-16590	-5733.22	15096	28535.75	4.977	Si
SLV 1	5.9	-27189	-19312.47	24740	42554.92	2.203	Si
SLV 1	7.8	-23778	16763.01	21636	38401	2.291	Si
SLV 10	5.9	-15880	5990.99	14449	27478.88	4.587	Si
SLV 10	7.8	-16590	-5733.22	15096	28535.75	4.977	Si
SLV 3	5.9	-32797	-19876.64	29842	48643.93	2.447	Si
SLV 3	7.8	-27510	16589.36	25032	42927.97	2.588	Si
SLV 2	5.9	-27189	-19312.47	24740	42554.92	2.203	Si
SLV 2	7.8	-23778	16763.01	21636	38401	2.291	Si

Verifica a taglio nel piano secondo D.M. 17-01-18 (N.T.C.) §7.8.2.2.2 con rottura per scorrimento in combinazioni non sismiche, γM = 3

Comb.	Quota	N	V par	M	σ0	σN	l'	fvd	Vt scorr.	Vt fess.diag.	Vt,lim	c.s.	Verifica
SLU 49	5.9	-33008	-304	-944.53		30035	3.925	9560	10507			34.51	Si
SLU 49	7.8	-29162	-304	-796.05		26535	3.925	9094	9994			32.86	Si
SLU 51	5.9	-32537	-294	-932.47		29606	3.925	9503	10444			35.48	Si
SLU 51	7.8	-28689	-294	-802.97		26105	3.925	9036	9931			33.78	Si
SLU 48	5.9	-32997	-305	-952.97		30025	3.925	9559	10505			34.48	Si
SLU 48	7.8	-29153	-304	-804.59		26527	3.925	9093	9993			32.84	Si
SLU 44	5.9	-30448	-246	-826.14		27705	3.925	9250	10165			41.29	Si
SLU 44	7.8	-26514	-246	-772.72		24126	3.925	8772	9641			39.21	Si
SLU 45	5.9	-31949	-281	-902.61		29071	3.925	9432	10365			36.94	Si
SLU 45	7.8	-28063	-280	-792.31		25535	3.925	8960	9847			35.14	Si
SLU 47	5.9	-31496	-270	-876.5		28659	3.925	9377	10305			38.13	Si
SLU 47	7.8	-27605	-270	-785		25118	3.925	8905	9786			36.26	Si
SLU 43	5.9	-30430	-246	-840.2		27689	3.925	9247	10163			41.23	Si
SLU 43	7.8	-26500	-246	-786.95		24113	3.925	8771	9639			39.17	Si
SLU 50	5.9	-32527	-295	-940.91		29597	3.925	9502	10442			35.45	Si
SLU 50	7.8	-28681	-294	-811.51		26098	3.925	9035	9930			33.76	Si
SLU 46	5.9	-31960	-280	-894.18		29081	3.925	9433	10367			36.96	Si
SLU 46	7.8	-28071	-280	-783.77		25542	3.925	8961	9848			35.16	Si
SLU 6	5.9	-26915	-225	-760.69		24490	3.925	8821	9694			43.03	Si
SLU 6	7.8	-24016	-225	-675.96		21853	3.925	8469	9308			41.37	Si

Verifica a taglio nel piano secondo D.M. 17-01-18 (N.T.C.) §7.8.2.2.2 con rottura per scorrimento in combinazioni sismiche, γM = 2

Comb.	Quota	N	V par	M	σ0	σN	l'	fvd	Vt scorr.	Vt fess.diag.	Vt,lim	c.s.	Verifica
SLV 15	5.9	-25463	19188	18039.15		24172	3.7622	13168	13871			0.72	No, Vu<V
SLV 15	7.8	-23151	18341	-18331.89		23543	3.512	13042	12825			0.7	No, Vu<V
SLV 4	5.9	-32797	-19789	-19876.64		29842	3.925	14302	15718			0.79	No, Vu<V
SLV 4	7.8	-27510	-18480	16589.36		25032	3.925	13340	14660			0.79	No, Vu<V
SLV 9	5.9	-15880	6383	5990.99		14449	3.925	11223	12334			1.93	Si
SLV 9	7.8	-16590	5292	-5733.22		15096	3.925	11352	12476			2.36	Si
SLV 1	5.9	-27189	-19403	-19312.47		25849	3.7566	13503	14203			0.73	No, Vu<V
SLV 1	7.8	-23778	-18555	16763.01		22510	3.7725	12835	13558			0.73	No, Vu<V
SLV 10	5.9	-15880	6383	5990.99		14449	3.925	11223	12334			1.93	Si
SLV 10	7.8	-16590	5292	-5733.22		15096	3.925	11352	12476			2.36	Si
SLV 13	5.9	-19855	19575	18603.32		23048	3.0767	12943	11150			0.57	No, Vu<V
SLV 13	7.8	-19419	18266	-18158.24		22501	3.0822	12833	11076			0.61	No, Vu<V
SLV 16	5.9	-25463	19188	18039.15		24172	3.7622	13168	13871			0.72	No, Vu<V
SLV 16	7.8	-23151	18341	-18331.89		23543	3.512	13042	12825			0.7	No, Vu<V
SLV 14	5.9	-19855	19575	18603.32		23048	3.0767	12943	11150			0.57	No, Vu<V
SLV 14	7.8	-19419	18266	-18158.24		22501	3.0822	12833	11076			0.61	No, Vu<V
SLV 2	5.9	-27189	-19403	-19312.47		25849	3.7566	13503	14203			0.73	No, Vu<V
SLV 2	7.8	-23778	-18555	16763.01		22510	3.7725	12835	13558			0.73	No, Vu<V
SLV 3	5.9	-32797	-19789	-19876.64		29842	3.925	14302	15718			0.79	No, Vu<V

Comb.	Quota	N	V par	M	σ0	σN	l'	fvd	Vt scorr.	Vt fess.diag.	Vt,lim	c.s.	Verifica
SLV 3	7.8	-27510	-18480	16589.36		25032	3.925	13340	14660			0.79	No, Vu<V

Verifica a pressoflessione fuori piano D.M. 17-01-18 (N.T.C.)

quota 6.775 Wa 0.05 denominatore 8 γM = 2

Comb.	fd	Sa	σ0	N	M	Mc	Coeff.s.	Verifica
SLV 10	143750	0.39	15168	-16670	409.86	2044.09	4.99	Si
SLV 9	143750	0.39	15168	-16670	409.86	2044.09	4.99	Si
SLV 6	143750	0.39	16755	-18414	409.86	2224.43	5.43	Si
SLV 5	143750	0.39	16755	-18414	409.86	2224.43	5.43	Si
SLV 14	143750	0.39	18181	-19981	409.86	2381.12	5.81	Si
SLV 13	143750	0.39	18181	-19981	409.86	2381.12	5.81	Si
SLV 16	143750	0.39	22350	-24563	409.86	2809.79	6.86	Si
SLV 15	143750	0.39	22350	-24563	409.86	2809.79	6.86	Si
SLV 2	143750	0.39	23470	-25794	409.86	2917.48	7.12	Si
SLV 1	143750	0.39	23470	-25794	409.86	2917.48	7.12	Si

Verifica dei meccanismi locali di collasso con analisi cinematica lineare

forza di aggancio al piano = 0 quota mezzeria = 6.775 Wa = 0.05 Ta = 0.0752

Comb.	N top	N base	V orto	α0	M*	e*	a0*	aLim	Verifica
SLV 5	-15901	-16388	-241	0.034	2175.5	0.931	0.53288	8.10374	No
SLV 6	-15901	-16388	-241	0.034	2175.5	0.931	0.53288	8.10374	No
SLV 10	-14730	-14466	-225	0.035	2057.5	0.928	0.54303	8.10374	No
SLV 9	-14730	-14466	-225	0.035	2057.5	0.928	0.54303	8.10374	No
SLV 11	-23818	-32141	238	0.036	2977.1	0.947	0.5493	8.10374	No
SLV 12	-23818	-32141	238	0.036	2977.1	0.947	0.5493	8.10374	No
SLV 8	-24988	-34062	222	0.037	3095.9	0.949	0.55912	8.10374	No
SLV 7	-24988	-34062	222	0.037	3095.9	0.949	0.55912	8.10374	No
SLV 1	-20447	-24816	-98	0.041	2635.3	0.941	0.63527	9.20386	No
SLV 2	-20447	-24816	-98	0.041	2635.3	0.941	0.63527	9.20386	No

Tabella dei coefficienti di sicurezza minimi

Stato limite	Coeff.s.	Comb.	Verifica
PF_SLU	31.55	SLU 81	Si
V_SLU	32.842	SLU 48	Si
PF_SLV	1.785	SLV 13	Si
V_SLV	0.57	SLV 13	No
PFFP_SLV	4.987	SLV 9	Si
R_SLV	0.066	SLV 5	No

Maschio 128

Verifiche condotte secondo D.M. 17-01-18 (N.T.C.)

Dati geometrici

X ini.	Y ini.	X fin.	Y fin.	Quota i.	Quota.s	l	Sp.	h netta	h ini.	h fin.	a	a.s.,sx	a.s.,dx
-11.868	6.64	-7.943	6.64	L4	L5	3.925	0.28	3.55	3.55	3.55			

Caratteristiche del materiale

(Circolare 7 21-01-19 C8.5.I) Muratura in mattoni pieni e malta di calce LC2_Corti

fb	fk	fvk0	fmedio	τ0	fv0	μ	ϕ	fv,lim	E	G	FC
600000			345000	9000	20000	0.58	0.77	32500	320000000	128000000	1.2

Verifica a pressoflessione nel piano secondo D.M. 17-01-18 NTC §7.8.2.2.1 in combinazioni non sismiche, γM = 3

Comb.	Quota	N	M	σ0	Mu	c.s.	Verifica
SLU 70	5.9	-37708	1044.85	34311	42831.31	40.993	Si
SLU 70	7.8	-34840	-288.68	31702	41764.22	144.673	Si
SLU 69	5.9	-37689	1042.95	34294	42825.61	41.062	Si
SLU 69	7.8	-34822	-284.77	31685	41756.4	146.633	Si
SLU 46	5.9	-33064	975.11	30086	40922.74	41.967	Si
SLU 46	7.8	-29884	-204.84	27192	39070.06	190.737	Si
SLU 48	5.9	-34013	1015.76	30949	41389.38	40.747	Si
SLU 48	7.8	-30891	-339.27	28108	39704.57	117.028	Si
SLU 51	5.9	-33522	997.84	30502	41152.9	41.242	Si
SLU 51	7.8	-30390	-357.9	27652	39394.13	110.071	Si
SLU 49	5.9	-34031	1017.67	30966	41398.06	40.679	Si
SLU 49	7.8	-30909	-343.19	28125	39715.49	115.726	Si
SLU 72	5.9	-37199	1025.02	33848	42668.21	41.627	Si
SLU 72	7.8	-34321	-303.39	31229	41532.38	136.894	Si
SLU 45	5.9	-33046	973.2	30069	40913.29	42.04	Si
SLU 45	7.8	-29866	-200.93	27176	39058.33	194.392	Si
SLU 50	5.9	-33504	995.93	30486	41143.82	41.312	Si
SLU 50	7.8	-30372	-353.99	27636	39382.81	111.255	Si
SLU 71	5.9	-37180	1023.12	33831	42662.09	41.698	Si
SLU 71	7.8	-34303	-299.48	31213	41524.15	138.654	Si

Verifica a pressoflessione nel piano secondo D.M. 17-01-18 NTC §7.8.2.2.1 in combinazioni sismiche, γM = 2

Comb.	Quota	N	M	σ0	Mu	c.s.	Verifica
SLV 1	5.9	-20716	-17178.89	18850	34383.81	2.002	Si
SLV 1	7.8	-20165	16515.24	18348	33630.63	2.036	Si
SLV 13	5.9	-27770	18393.35	25269	43228.44	2.35	Si
SLV 13	7.8	-25833	-16792.32	23506	40944.65	2.438	Si
SLV 15	5.9	-33903	18605.27	30849	49736.59	2.673	Si
SLV 15	7.8	-29958	-16500.57	27260	45676.69	2.768	Si
SLV 14	5.9	-27770	18393.35	25269	43228.44	2.35	Si
SLV 14	7.8	-25833	-16792.32	23506	40944.65	2.438	Si

Comb.	Quota	N	M	σ0	Mu	c.s.	Verifica
SLV 9	5.9	-18146	5695.82	16512	30799.55	5.407	Si
SLV 9	7.8	-19037	-5475.05	17322	32063.15	5.856	Si
SLV 4	5.9	-26849	-16966.97	24431	42156.42	2.485	Si
SLV 4	7.8	-24290	16806.99	22102	39046.15	2.323	Si
SLV 16	5.9	-33903	18605.27	30849	49736.59	2.673	Si
SLV 16	7.8	-29958	-16500.57	27260	45676.69	2.768	Si
SLV 3	5.9	-26849	-16966.97	24431	42156.42	2.485	Si
SLV 3	7.8	-24290	16806.99	22102	39046.15	2.323	Si
SLV 10	5.9	-18146	5695.82	16512	30799.55	5.407	Si
SLV 10	7.8	-19037	-5475.05	17322	32063.15	5.856	Si
SLV 2	5.9	-20716	-17178.89	18850	34383.81	2.002	Si
SLV 2	7.8	-20165	16515.24	18348	33630.63	2.036	Si

Verifica a taglio nel piano secondo D.M. 17-01-18 (N.T.C.) §7.8.2.2.2 con rottura per scorrimento in combinazioni non sismiche, γM = 3

Comb.	Quota	N	V par	M	σ0	σN	l'	fvd	Vt scorr.	Vt fess.diag.	Vt,lim	c.s.	Verifica
SLU 48	5.9	-34013	914	1015.76		30949	3.925	9682	10641			11.64	Si
SLU 48	7.8	-30891	914	-339.27		28108	3.925	9303	10224			11.18	Si
SLU 59	5.9	-37040	879	989.53		33703	3.925	10049	11044			12.57	Si
SLU 59	7.8	-34294	879	-228.96		31204	3.925	9716	10678			12.14	Si
SLU 72	5.9	-37199	930	1025.02		33848	3.925	10069	11065			11.9	Si
SLU 72	7.8	-34321	930	-303.39		31229	3.925	9719	10682			11.49	Si
SLU 50	5.9	-33504	910	995.93		30486	3.925	9620	10573			11.61	Si
SLU 50	7.8	-30372	911	-353.99		27636	3.925	9240	10155			11.15	Si
SLU 57	5.9	-37549	883	1009.36		34166	3.925	10111	11112			12.59	Si
SLU 57	7.8	-34813	883	-214.25		31677	3.925	9779	10747			12.17	Si
SLU 71	5.9	-37180	927	1023.12		33831	3.925	10066	11063			11.94	Si
SLU 71	7.8	-34303	927	-299.48		31213	3.925	9717	10679			11.52	Si
SLU 51	5.9	-33522	913	997.84		30502	3.925	9623	10575			11.58	Si
SLU 51	7.8	-30390	914	-357.9		27652	3.925	9242	10157			11.12	Si
SLU 49	5.9	-34031	917	1017.67		30966	3.925	9684	10643			11.61	Si
SLU 49	7.8	-30909	917	-343.19		28125	3.925	9306	10227			11.15	Si
SLU 70	5.9	-37708	933	1044.85		34311	3.925	10130	11133			11.93	Si
SLU 70	7.8	-34840	934	-288.68		31702	3.925	9782	10751			11.51	Si
SLU 69	5.9	-37689	930	1042.95		34294	3.925	10128	11131			11.96	Si
SLU 69	7.8	-34822	931	-284.77		31685	3.925	9780	10748			11.55	Si

Verifica a taglio nel piano secondo D.M. 17-01-18 (N.T.C.) §7.8.2.2.2 con rottura per scorrimento in combinazioni sismiche, γM = 2

Comb.	Quota	N	V par	M	σ0	σN	l'	fvd	Vt scorr.	Vt fess.diag.	Vt,lim	c.s.	Verifica
SLV 13	5.9	-27770	19152	18393.35		25427	3.9005	13419	14655			0.77	No, Vu<V
SLV 13	7.8	-25833	18112	-16792.32		23506	3.925	13035	14325			0.79	No, Vu<V
SLV 2	5.9	-20716	-18010	-17178.89		21762	3.3998	12686	12076			0.67	No, Vu<V
SLV 2	7.8	-20165	-16848	16515.24		20993	3.4304	12532	12037			0.71	No, Vu<V
SLV 9	5.9	-18146	6209	5695.82		16512	3.925	11636	12788			2.06	Si
SLV 9	7.8	-19037	6082	-5475.05		17322	3.925	11798	12966			2.13	Si
SLV 3	5.9	-26849	-18064	-16966.97		24431	3.925	13219	14528			0.8	No, Vu<V
SLV 3	7.8	-24290	-17024	16806.99		22759	3.8117	12885	13752			0.81	No, Vu<V
SLV 16	5.9	-33903	19098	18605.27		30849	3.925	14503	15939			0.83	No, Vu<V
SLV 16	7.8	-29958	17937	-16500.57		27260	3.925	13785	15150			0.84	No, Vu<V
SLV 10	5.9	-18146	6209	5695.82		16512	3.925	11636	12788			2.06	Si
SLV 10	7.8	-19037	6082	-5475.05		17322	3.925	11798	12966			2.13	Si
SLV 14	5.9	-27770	19152	18393.35		25427	3.9005	13419	14655			0.77	No, Vu<V
SLV 14	7.8	-25833	18112	-16792.32		23506	3.925	13035	14325			0.79	No, Vu<V
SLV 15	5.9	-33903	19098	18605.27		30849	3.925	14503	15939			0.83	No, Vu<V
SLV 15	7.8	-29958	17937	-16500.57		27260	3.925	13785	15150			0.84	No, Vu<V
SLV 1	5.9	-20716	-18010	-17178.89		21762	3.3998	12686	12076			0.67	No, Vu<V
SLV 1	7.8	-20165	-16848	16515.24		20993	3.4304	12532	12037			0.71	No, Vu<V
SLV 4	5.9	-26849	-18064	-16966.97		24431	3.925	13219	14528			0.8	No, Vu<V
SLV 4	7.8	-24290	-17024	16806.99		22759	3.8117	12885	13752			0.81	No, Vu<V

Verifica a pressoflessione fuori piano D.M. 17-01-18 (N.T.C.)

quota 6.775 Wa 0.05 denominatore 8 γM = 2

Comb.	fd	Sa	σ0	N	M	Mc	Coeff.s.	Verifica
SLV 6	143750	0.39	15539	-17078	409.86	2086.81	5.09	Si
SLV 5	143750	0.39	15539	-17078	409.86	2086.81	5.09	Si
SLV 10	143750	0.39	17297	-19009	409.86	2284.55	5.57	Si
SLV 9	143750	0.39	17297	-19009	409.86	2284.55	5.57	Si
SLV 2	143750	0.39	18794	-20654	409.86	2446.84	5.97	Si
SLV 1	143750	0.39	18794	-20654	409.86	2446.84	5.97	Si
SLV 4	143750	0.39	23341	-25652	409.86	2905.2	7.09	Si
SLV 3	143750	0.39	23341	-25652	409.86	2905.2	7.09	Si
SLV 14	143750	0.39	24652	-27093	409.86	3027.72	7.39	Si
SLV 13	143750	0.39	24652	-27093	409.86	3027.72	7.39	Si

Verifica dei meccanismi locali di collasso con analisi cinematica lineare

forza di aggancio al piano = 0 quota mezzeria = 6.775 Wa = 0.05 Ta = 0.0752

Comb.	N top	N base	V orto	α0	M*	e*	a0*	aLim	Verifica
SLV 15	-24370	-32473	44	0.043	3033.1	0.948	0.65645	9.20386	No
SLV 16	-24370	-32473	44	0.043	3033.1	0.948	0.65645	9.20386	No
SLV 13	-21396	-26430	-57	0.043	2731.6	0.943	0.65849	9.20386	No
SLV 14	-21396	-26430	-57	0.043	2731.6	0.943	0.65849	9.20386	No
SLV 4	-20036	-25449	52	0.043	2593.7	0.94	0.66614	9.20386	No
SLV 3	-20036	-25449	52	0.043	2593.7	0.94	0.66614	9.20386	No
SLV 7	-25022	-34958	167	0.038	3099.3	0.949	0.58861	8.10374	No
SLV 8	-25022	-34958	167	0.038	3099.3	0.949	0.58861	8.10374	No
SLV 9	-16411	-16922	-172	0.038	2227.1	0.932	0.58872	8.10374	No
SLV 10	-16411	-16922	-172	0.038	2227.1	0.932	0.58872	8.10374	No

Tabella dei coefficienti di sicurezza minimi

Stato limite	Coeff.s.	Comb.	Verifica

Stato limite	Coeff.s.	Comb.	Verifica
PF_SLU	40.679	SLU 49	Si
V_SLU	11.116	SLU 51	Si
PF_SLV	2.002	SLV 1	Si
V_SLV	0.671	SLV 1	No
PFFP_SLV	5.091	SLV 5	Si
R_SLV	0.071	SLV 15	No

Maschio 129

Verifiche condotte secondo D.M. 17-01-18 (N.T.C.)

Dati geometrici

X ini.	Y ini.	X fin.	Y fin.	Quota i.	Quota.s	l	Sp.	h netta	h ini.	h fin.	a	a.s.,sx	a.s.,dx
-6.943	6.64	-5.088	6.64	L4	L5	1.855	0.28	3.55	3.55	3.55			

Caratteristiche del materiale

(Circolare 7 21-01-19 C8.5.I) Muratura in mattoni pieni e malta di calce LC2_Corti

fb	fk	fvk0	fmedio	τ0	fv0	μ	ϕ	fv,lim	E	G	FC
600000			345000	9000	20000	0.58	0.77	32500	320000000	128000000	1.2

Verifica a pressoflessione nel piano secondo D.M. 17-01-18 NTC §7.8.2.2.1 in combinazioni non sismiche, γM = 3

Comb.	Quota	N	M	σ0	Mu	c.s.	Verifica
SLU 74	5.9	-16817	-1081.86	32371	9401.33	8.69	Si
SLU 74	7.8	-17397	-928.15	33488	9504.43	10.24	Si
SLU 81	5.9	-16880	-1083	32492	9413.21	8.692	Si
SLU 81	7.8	-17518	-941.57	33720	9523.98	10.115	Si
SLU 83	5.9	-17186	-1083.83	33081	9468.56	8.736	Si
SLU 83	7.8	-17916	-993.99	34486	9584.05	9.642	Si
SLU 67	5.9	-15393	-1037.32	29630	9085.8	8.759	Si
SLU 67	7.8	-15551	-763.93	29933	9125.08	11.945	Si
SLU 77	5.9	-17123	-1082.69	32960	9457.52	8.735	Si
SLU 77	7.8	-17795	-980.56	34254	9566.6	9.756	Si
SLU 82	5.9	-16884	-1084.2	32499	9413.92	8.683	Si
SLU 82	7.8	-17518	-942.1	33720	9524.05	10.109	Si
SLU 78	5.9	-17127	-1083.89	32967	9458.19	8.726	Si
SLU 78	7.8	-17796	-981.09	34255	9566.67	9.751	Si
SLU 84	5.9	-17189	-1085.03	33088	9469.22	8.727	Si
SLU 84	7.8	-17916	-994.52	34486	9584.11	9.637	Si
SLU 73	5.9	-16274	-1065.39	31326	9291.55	8.721	Si
SLU 73	7.8	-16727	-871.85	32197	9383.99	10.763	Si
SLU 75	5.9	-16821	-1083.05	32378	9402.05	8.681	Si
SLU 75	7.8	-17398	-928.68	33489	9504.5	10.234	Si

Verifica a pressoflessione nel piano secondo D.M. 17-01-18 NTC §7.8.2.2.1 in combinazioni sismiche, γM = 2

Comb.	Quota	N	M	σ0	Mu	c.s.	Verifica
SLV 1	5.9	-11823	-4214.04	22757	8925.11	2.118	Si
SLV 1	7.8	-5792	4774.27	11148	4882.73	1.023	Si
SLV 4	5.9	-14696	-4392.4	28289	10477.21	2.385	Si
SLV 4	7.8	-8775	4819.2	16892	7015.44	1.456	Si
SLV 13	5.9	-8301	2824.51	15978	6693.64	2.37	Si
SLV 13	7.8	-14366	-5932.98	27653	10311.03	1.738	Si
SLV 16	5.9	-11174	2646.15	21509	8541.54	3.228	Si
SLV 16	7.8	-17349	-5888.05	33396	11696.01	1.986	Si
SLV 14	5.9	-8301	2824.51	15978	6693.64	2.37	Si
SLV 14	7.8	-14366	-5932.98	27653	10311.03	1.738	Si
SLV 2	5.9	-11823	-4214.04	22757	8925.11	2.118	Si
SLV 2	7.8	-5792	4774.27	11148	4882.73	1.023	Si
SLV 9	5.9	-6181	569.1	11898	5175.76	9.095	Si
SLV 9	7.8	-7884	-2237.85	15176	6405.55	2.862	Si
SLV 10	5.9	-6181	569.1	11898	5175.76	9.095	Si
SLV 10	7.8	-7884	-2237.85	15176	6405.55	2.862	Si
SLV 3	5.9	-14696	-4392.4	28289	10477.21	2.385	Si
SLV 3	7.8	-8775	4819.2	16892	7015.44	1.456	Si
SLV 15	5.9	-11174	2646.15	21509	8541.54	3.228	Si
SLV 15	7.8	-17349	-5888.05	33396	11696.01	1.986	Si

Verifica a taglio nel piano secondo D.M. 17-01-18 (N.T.C.) §7.8.2.2.2 con rottura per scorrimento in combinazioni non sismiche, γM = 3

Comb.	Quota	N	V par	M	σ0	σN	l'	fvd	Vt scorr.	Vt fess.diag.	Vt,lim	c.s.	Verifica
SLU 83	5.9	-17186	1474	-1083.83		33081	1.8554	9966	5178			3.51	Si
SLU 83	7.8	-17916	1539	-993.99		34486	1.8554	10154	5275			3.43	Si
SLU 84	5.9	-17189	1474	-1085.03		33088	1.8554	9967	5178			3.51	Si
SLU 84	7.8	-17916	1536	-994.52		34486	1.8554	10154	5275			3.43	Si
SLU 41	5.9	-14492	1352	-875.86		27896	1.8554	9275	4818			3.56	Si
SLU 41	7.8	-15388	1407	-906.23		29620	1.8554	9505	4938			3.51	Si
SLU 79	5.9	-16880	1434	-1065.07		32492	1.8554	9888	5137			3.58	Si
SLU 79	7.8	-17522	1495	-975.79		33728	1.8554	10053	5222			3.49	Si
SLU 82	5.9	-16884	1402	-1084.2		32499	1.8554	9889	5137			3.66	Si
SLU 82	7.8	-17518	1464	-942.1		33720	1.8554	10052	5222			3.57	Si
SLU 42	5.9	-14496	1351	-877.05		27903	1.8554	9276	4819			3.57	Si
SLU 42	7.8	-15388	1405	-906.76		29620	1.8554	9505	4938			3.51	Si
SLU 81	5.9	-16880	1403	-1083		32492	1.8554	9888	5137			3.66	Si
SLU 81	7.8	-17518	1467	-941.57		33720	1.8554	10052	5222			3.56	Si
SLU 80	5.9	-16884	1433	-1066.26		32499	1.8554	9889	5137			3.59	Si
SLU 80	7.8	-17522	1493	-976.32		33729	1.8554	10053	5222			3.5	Si
SLU 78	5.9	-17127	1440	-1083.89		32967	1.8554	9951	5170			3.59	Si
SLU 78	7.8	-17796	1501	-981.09		34255	1.8554	10123	5259			3.5	Si
SLU 77	5.9	-17123	1441	-1082.69		32960	1.8554	9950	5169			3.59	Si

Comb.	Quota	N	V par	M	σ0	σN	l'	fvd	Vt scorr.	Vt fess.diag.	Vt,lim	c.s.	Verifica
SLU 77	7.8	-17795	1504	-980.56		34254	1.8554	10123	5259			3.5	Si

Verifica a taglio nel piano secondo D.M. 17-01-18 (N.T.C.) §7.8.2.2.2 con rottura per scorrimento in combinazioni sismiche, γM = 2

Comb.	Quota	N	V par	M	σ0	σN	l'	fvd	Vt scorr.	Vt fess.diag.	Vt,lim	c.s.	Verifica
SLV 14	5.9	-8301	9274	2824.51		16822	1.7623	11698	5772			0.62	No, Vu<V
SLV 14	7.8	-14366	8738	-5932.98		33227	1.5441	14979	6476			0.74	No, Vu<V
SLV 10	5.9	-6181	5573	569.1		11898	1.8554	10713	5565			1	No, Vu<V
SLV 10	7.8	-7884	5105	-2237.85		15176	1.8554	11368	5906			1.16	Si
SLV 15	5.9	-11174	7810	2646.15		21509	1.8554	12635	6564			0.84	No, Vu<V
SLV 15	7.8	-17349	7496	-5888.05		35107	1.765	15355	7588			1.01	Si
SLV 3	5.9	-14696	-7645	-4392.4		28289	1.8554	13991	7268			0.95	No, Vu<V
SLV 3	7.8	-8775	-7025	4819.2		27599	1.1356	13853	4405			0.63	No, Vu<V
SLV 1	5.9	-11823	-6181	-4214.04		24638	1.7138	13261	6363			1.03	Si
SLV 1	7.8	-5792	-5783	4774.27		66702	0.3101	16250	1411			0.24	No, Vu<V
SLV 13	5.9	-8301	9274	2824.51		16822	1.7623	11698	5772			0.62	No, Vu<V
SLV 13	7.8	-14366	8738	-5932.98		33227	1.5441	14979	6476			0.74	No, Vu<V
SLV 9	5.9	-6181	5573	569.1		11898	1.8554	10713	5565			1	No, Vu<V
SLV 9	7.8	-7884	5105	-2237.85		15176	1.8554	11368	5906			1.16	Si
SLV 16	5.9	-11174	7810	2646.15		21509	1.8554	12635	6564			0.84	No, Vu<V
SLV 16	7.8	-17349	7496	-5888.05		35107	1.765	15355	7588			1.01	Si
SLV 4	5.9	-14696	-7645	-4392.4		28289	1.8554	13991	7268			0.95	No, Vu<V
SLV 4	7.8	-8775	-7025	4819.2		27599	1.1356	13853	4405			0.63	No, Vu<V
SLV 2	5.9	-11823	-6181	-4214.04		24638	1.7138	13261	6363			1.03	Si
SLV 2	7.8	-5792	-5783	4774.27		66702	0.3101	16250	1411			0.24	No, Vu<V

Verifica a pressoflessione fuori piano D.M. 17-01-18 (N.T.C.)

quota 6.775 Wa 0.05 denominatore 8 γM = 2

Comb.	fd	Sa	σ0	N	M	Mc	Coeff.s.	Verifica
SLV 6	143750	0.39	15639	-8124	193.75	991.85	5.12	Si
SLV 5	143750	0.39	15639	-8124	193.75	991.85	5.12	Si
SLV 1	143750	0.39	16550	-8598	193.75	1040.65	5.37	Si
SLV 2	143750	0.39	16550	-8598	193.75	1040.65	5.37	Si
SLV 10	143750	0.39	18637	-9682	193.75	1148.77	5.93	Si
SLV 9	143750	0.39	18637	-9682	193.75	1148.77	5.93	Si
SLV 3	143750	0.39	20329	-10561	193.75	1232.57	6.36	Si
SLV 4	143750	0.39	20329	-10561	193.75	1232.57	6.36	Si
SLV 13	143750	0.39	26545	-13791	193.75	1511.24	7.8	Si
SLV 14	143750	0.39	26545	-13791	193.75	1511.24	7.8	Si

Verifica dei meccanismi locali di collasso con analisi cinematica lineare

forza di aggancio al piano = 0 quota mezzeria = 6.775 Wa = 0.05 Ta = 0.0752

Comb.	N top	N base	V orto	α0	M*	e*	a0*	aLim	Verifica
SLV 6	-6007	-5278	-121	0.032	876.4	0.922	0.50726	8.10374	No
SLV 5	-6007	-5278	-121	0.032	876.4	0.922	0.50726	8.10374	No
SLV 15	-11013	-12703	78	0.038	1382.4	0.946	0.59063	9.20386	No
SLV 16	-11013	-12703	78	0.038	1382.4	0.946	0.59063	9.20386	No
SLV 2	-7613	-7516	-74	0.039	1038.2	0.932	0.60133	9.20386	No
SLV 1	-7613	-7516	-74	0.039	1038.2	0.932	0.60133	9.20386	No
SLV 12	-12620	-14941	125	0.035	1545.5	0.951	0.53851	8.10374	No
SLV 11	-12620	-14941	125	0.035	1545.5	0.951	0.53851	8.10374	No
SLV 10	-6474	-6033	-96	0.036	923.3	0.925	0.56164	8.10374	No
SLV 9	-6474	-6033	-96	0.036	923.3	0.925	0.56164	8.10374	No

Tabella dei coefficienti di sicurezza minimi

Stato limite	Coeff.s.	Comb.	Verifica
PF_SLU	8.681	SLU 75	Si
V_SLU	3.428	SLU 83	Si
PF_SLV	1.023	SLV 1	Si
V_SLV	0.244	SLV 1	No
PFFP_SLV	5.119	SLV 5	Si
R_SLV	0.063	SLV 5	No

Maschio 130

Verifiche condotte secondo D.M. 17-01-18 (N.T.C.)

Dati geometrici

X ini.	Y ini.	X fin.	Y fin.	Quota i.	Quota.s	l	Sp.	h netta	h ini.	h fin.	a	a.s.,sx	a.s.,dx
-20.6	1.141	-24.613	1.141	L4	L5	4.013	0.28	3.55	3.55	3.55			

Caratteristiche del materiale

(Circolare 7 21-01-19 C8.5.I) Muratura in mattoni pieni e malta di calce LC2_Corti

fb	fk	fvk0	fmedio	τ0	fv0	μ	ϕ	fv,lim	E	G	FC
600000			345000	9000	20000	0.58	0.77	32500	320000000	128000000	1.2

Verifica a pressoflessione nel piano secondo D.M. 17-01-18 NTC §7.8.2.2.1 in combinazioni non sismiche, γM = 3

Comb.	Quota	N	M	σ0	Mu	c.s.	Verifica
SLU 81	5	-36090	17072.93	32121	43857.11	2.569	Si
SLU 81	7.1	-42558	-259.92	37877	45682.95	175.757	Si
SLU 80	5	-36845	16848.59	32792	44164.75	2.621	Si
SLU 80	7.1	-43180	-641.59	38431	45761.81	71.326	Si
SLU 84	5	-36856	17195.43	32802	44169.17	2.569	Si
SLU 84	7.1	-43631	-498.92	38833	45808.47	91.815	Si
SLU 77	5	-37415	17202.9	33300	44380.65	2.58	Si
SLU 77	7.1	-43871	-790.95	39046	45829.64	57.942	Si

Comb.	Quota	N	M	σ0	Mu	c.s.	Verifica
SLU 79	5	-36992	17076.22	32924	44221.89	2.59	Si
SLU 79	7.1	-43352	-713.4	38584	45780.71	64.173	Si
SLU 74	5	-36501	16852.77	32487	44028.01	2.613	Si
SLU 74	7.1	-42625	-480.15	37937	45692.32	95.163	Si
SLU 75	5	-36354	16625.14	32356	43967.7	2.645	Si
SLU 75	7.1	-42453	-408.34	37784	45667.92	111.837	Si
SLU 83	5	-37003	17423.06	32934	44226.24	2.538	Si
SLU 83	7.1	-43804	-570.73	38986	45823.95	80.291	Si
SLU 78	5	-37268	16975.27	33169	44326.24	2.611	Si
SLU 78	7.1	-43699	-719.15	38893	45814.67	63.707	Si
SLU 82	5	-35942	16845.3	31989	43794.14	2.6	Si
SLU 82	7.1	-42385	-188.12	37724	45658.03	242.713	Si

Verifica a pressoflessione nel piano secondo D.M. 17-01-18 NTC §7.8.2.2.1 in combinazioni sismiche, γM = 2

Comb.	Quota	N	M	σ0	Mu	c.s.	Verifica
SLV 7	5	-23262	11173.85	20704	38764.54	3.469	Si
SLV 7	7.1	-29462	3578.84	26222	46426.45	12.972	Si
SLV 3	5	-32159	22566.06	28623	49409.16	2.19	Si
SLV 3	7.1	-40880	-6832.42	36384	57597.26	8.43	Si
SLV 6	5	-32494	19103.11	28921	49764.69	2.605	Si
SLV 6	7.1	-35679	-8455.25	31755	52981.69	6.266	Si
SLV 15	5	-15971	-2053.85	14215	28316.32	13.787	Si
SLV 15	7.1	-14475	10879.96	12883	25979.67	2.388	Si
SLV 1	5	-34929	24944.83	31088	52250.54	2.095	Si
SLV 1	7.1	-42745	-10442.65	38044	59059.99	5.656	Si
SLV 5	5	-32494	19103.11	28921	49764.69	2.605	Si
SLV 5	7.1	-35679	-8455.25	31755	52981.69	6.266	Si
SLV 2	5	-34929	24944.83	31088	52250.54	2.095	Si
SLV 2	7.1	-42745	-10442.65	38044	59059.99	5.656	Si
SLV 4	5	-32159	22566.06	28623	49409.16	2.19	Si
SLV 4	7.1	-40880	-6832.42	36384	57597.26	8.43	Si
SLV 8	5	-23262	11173.85	20704	38764.54	3.469	Si
SLV 8	7.1	-29462	3578.84	26222	46426.45	12.972	Si
SLV 16	5	-15971	-2053.85	14215	28316.32	13.787	Si
SLV 16	7.1	-14475	10879.96	12883	25979.67	2.388	Si

Verifica a taglio nel piano secondo D.M. 17-01-18 (N.T.C.) §7.8.2.2.2 con rottura per scorrimento in combinazioni non sismiche, γM = 3

Comb.	Quota	N	V par	M	σ0	σN	I'	fvd	Vt scorr.	Vt fess.diag.	Vt,lim	c.s.	Verifica
SLU 84	5	-36856	20347	17195.43		32802	4.0128	9929	11156			0.55	No, Vu<V
SLU 84	7.1	-43631	20387	-498.92		38833	4.0128	10733	12060			0.59	No, Vu<V
SLU 78	5	-37268	20019	16975.27		33169	4.0128	9978	11211			0.56	No, Vu<V
SLU 78	7.1	-43699	20058	-719.15		38893	4.0128	10741	12069			0.6	No, Vu<V
SLU 82	5	-35942	19716	16845.3		31989	4.0128	9821	11034			0.56	No, Vu<V
SLU 82	7.1	-42385	19755	-188.12		37724	4.0128	10585	11893			0.6	No, Vu<V
SLU 81	5	-36090	19899	17072.93		32121	4.0128	9838	11054			0.56	No, Vu<V
SLU 81	7.1	-42558	19901	-259.92		37877	4.0128	10606	11916			0.6	No, Vu<V
SLU 79	5	-36992	20013	17076.22		32924	4.0128	9945	11174			0.56	No, Vu<V
SLU 79	7.1	-43352	20015	-713.4		38584	4.0128	10700	12022			0.6	No, Vu<V
SLU 83	5	-37003	20531	17423.06		32934	4.0128	9947	11176			0.54	No, Vu<V
SLU 83	7.1	-43804	20533	-570.73		38986	4.0128	10754	12083			0.59	No, Vu<V
SLU 80	5	-36845	19830	16848.59		32792	4.0128	9928	11155			0.56	No, Vu<V
SLU 80	7.1	-43180	19869	-641.59		38431	4.0128	10680	11999			0.6	No, Vu<V
SLU 74	5	-36501	19570	16852.77		32487	4.0128	9887	11109			0.57	No, Vu<V
SLU 74	7.1	-42625	19572	-480.15		37937	4.0128	10614	11925			0.61	No, Vu<V
SLU 77	5	-37415	20202	17202.9		33300	4.0128	9996	11231			0.56	No, Vu<V
SLU 77	7.1	-43871	20204	-790.95		39046	4.0128	10762	12092			0.6	No, Vu<V
SLU 41	5	-30638	18133	14840.72		27268	4.0128	9191	10327			0.57	No, Vu<V
SLU 41	7.1	-37327	18134	-864.1		33222	4.0128	9985	11219			0.62	No, Vu<V

Verifica a taglio nel piano secondo D.M. 17-01-18 (N.T.C.) §7.8.2.2.2 con rottura per scorrimento in combinazioni sismiche, γM = 2

Comb.	Quota	N	V par	M	σ0	σN	I'	fvd	Vt scorr.	Vt fess.diag.	Vt,lim	c.s.	Verifica
SLV 9	5	-27638	12466	11717.13		24598	4.0128	13253	14891			1.19	Si
SLV 9	7.1	-27758	12684	-3141.53		24705	4.0128	13274	14915			1.18	Si
SLV 4	5	-32159	26969	22566.06		29344	3.9141	14202	15565			0.58	No, Vu<V
SLV 4	7.1	-40880	25776	-6832.42		36384	4.0128	15610	17539			0.68	No, Vu<V
SLV 10	5	-27638	12466	11717.13		24598	4.0128	13253	14891			1.19	Si
SLV 10	7.1	-27758	12684	-3141.53		24705	4.0128	13274	14915			1.18	Si
SLV 2	5	-34929	29772	24944.83		32179	3.8767	14769	16031			0.54	No, Vu<V
SLV 2	7.1	-42745	28484	-10442.65		38044	4.0128	15942	17912			0.63	No, Vu<V
SLV 6	5	-32494	21962	19103.11		28921	4.0128	14117	15862			0.72	No, Vu<V
SLV 6	7.1	-35679	21435	-8455.25		31755	4.0128	14684	16499			0.77	No, Vu<V
SLV 7	5	-23262	12621	11173.85		20704	4.0128	12474	14016			1.11	Si
SLV 7	7.1	-29462	12406	3578.84		26222	4.0128	13578	15256			1.23	Si
SLV 8	5	-23262	12621	11173.85		20704	4.0128	12474	14016			1.11	Si
SLV 8	7.1	-29462	12406	3578.84		26222	4.0128	13578	15256			1.23	Si
SLV 1	5	-34929	29772	24944.83		32179	3.8767	14769	16031			0.54	No, Vu<V
SLV 1	7.1	-42745	28484	-10442.65		38044	4.0128	15942	17912			0.63	No, Vu<V
SLV 5	5	-32494	21962	19103.11		28921	4.0128	14117	15862			0.72	No, Vu<V
SLV 5	7.1	-35679	21435	-8455.25		31755	4.0128	14684	16499			0.77	No, Vu<V
SLV 3	5	-32159	26969	22566.06		29344	3.9141	14202	15565			0.58	No, Vu<V
SLV 3	7.1	-40880	25776	-6832.42		36384	4.0128	15610	17539			0.68	No, Vu<V

Verifica a pressoflessione fuori piano D.M. 17-01-18 (N.T.C.)

quota 6.775 Wa 0.05 denominatore 8 γM = 2

Comb.	fd	Sa	σ0	N	M	Mc	Coeff.s.	Verifica
SLV 15	143750	0.39	13448	-15110	428.77	1882.6	4.39	Si
SLV 16	143750	0.39	13448	-15110	428.77	1882.6	4.39	Si
SLV 13	143750	0.39	14491	-16281	428.77	2009.08	4.69	Si
SLV 14	143750	0.39	14491	-16281	428.77	2009.08	4.69	Si

Comb.	fd	Sa	σ0	N	M	Mc	Coeff.s.	Verifica
SLV 12	143750	0.39	20027	-22502	428.77	2633.94	6.14	Si
SLV 11	143750	0.39	20027	-22502	428.77	2633.94	6.14	Si
SLV 9	143750	0.39	23502	-26406	428.77	2985.8	6.96	Si
SLV 10	143750	0.39	23502	-26406	428.77	2985.8	6.96	Si
SLV 8	143750	0.39	26709	-30009	428.77	3282.93	7.66	Si
SLV 7	143750	0.39	26709	-30009	428.77	3282.93	7.66	Si

Verifica dei meccanismi locali di collasso con analisi cinematica lineare

forza di aggancio al piano = 0 quota mezzeria = 6.775 Wa = 0.05 Ta = 0.0752

Comb.	N top	N base	V orto	α0	M*	e*	a0*	aLim	Verifica
SLV 12	-23317	-18406	-512	0.026	2938.9	0.945	0.39439	8.10374	No
SLV 11	-23317	-18406	-512	0.026	2938.9	0.945	0.39439	8.10374	No
SLV 6	-28090	-32494	509	0.028	3423.3	0.952	0.42507	8.10374	No
SLV 5	-28090	-32494	509	0.028	3423.3	0.952	0.42507	8.10374	No
SLV 15	-18892	-15971	-302	0.032	2490.5	0.937	0.5006	9.20386	No
SLV 16	-18892	-15971	-302	0.032	2490.5	0.937	0.5006	9.20386	No
SLV 10	-24071	-27638	411	0.03	3015.3	0.947	0.45569	8.10374	No
SLV 9	-24071	-27638	411	0.03	3015.3	0.947	0.45569	8.10374	No
SLV 8	-27337	-23262	-415	0.031	3346.8	0.951	0.46736	8.10374	No
SLV 7	-27337	-23262	-415	0.031	3346.8	0.951	0.46736	8.10374	No

Tabella dei coefficienti di sicurezza minimi

Stato limite	Coeff.s.	Comb.	Verifica
PF_SLU	2.538	SLU 83	Si
V_SLU	0.544	SLU 83	No
PF_SLV	2.095	SLV 1	Si
V_SLV	0.538	SLV 1	No
PFFP_SLV	4.391	SLV 15	Si
R_SLV	0.049	SLV 11	No

Maschio 131

Verifiche condotte secondo D.M. 17-01-18 (N.T.C.)

Dati geometrici

X ini.	Y ini.	X fin.	Y fin.	Quota i.	Quota.s	l	Sp.	h netta	h ini.	h fin.	a	a.s.,sx	a.s.,dx
-12.865	1.141	-19.8	1.141	L4	L5	6.935	0.28	3.55	3.55	3.55			

Caratteristiche del materiale

(Circolare 7 21-01-19 C8.5.I) Muratura in mattoni pieni e malta di calce LC2_Corti

fb	fk	fvk0	fmedio	τ0	fv0	μ	ϕ	fv,lim	E	G	FC
600000			345000	9000	20000	0.58	0.77	32500	320000000	128000000	1.2

Verifica a pressoflessione nel piano secondo D.M. 17-01-18 NTC §7.8.2.2.1 in combinazioni non sismiche, γM = 3

Comb.	Quota	N	M	σ0	Mu	c.s.	Verifica
SLU 82	5	-80757	-25714.9	41589	137057.53	5.33	Si
SLU 82	7.5	-73635	-16260.91	37921	136466.67	8.392	Si
SLU 84	5	-83109	-25803.24	42800	136764.19	5.3	Si
SLU 84	7.5	-76161	-17064.19	39222	136930.78	8.024	Si
SLU 75	5	-81310	-24424.9	41873	137010.37	5.609	Si
SLU 75	7.5	-73896	-16519.29	38055	136527.62	8.265	Si
SLU 76	5	-79922	-24235.6	41159	137103.35	5.657	Si
SLU 76	7.5	-72893	-15980.79	37539	136277.42	8.528	Si
SLU 83	5	-83532	-25716.04	43018	136685.62	5.315	Si
SLU 83	7.5	-76016	-17516.65	39147	136911.75	7.816	Si
SLU 81	5	-81180	-25627.69	41807	137022.62	5.347	Si
SLU 81	7.5	-73490	-16713.37	37846	136431.6	8.163	Si
SLU 74	5	-81733	-24337.7	42091	136965.19	5.628	Si
SLU 74	7.5	-73751	-16971.75	37981	136494.22	8.042	Si
SLU 77	5	-84085	-24426.04	43303	136571.18	5.591	Si
SLU 77	7.5	-76277	-17775.03	39282	136945.43	7.704	Si
SLU 80	5	-82556	-24265.81	42515	136854.96	5.64	Si
SLU 80	7.5	-75323	-17085.71	38790	136807.91	8.007	Si
SLU 78	5	-83662	-24513.25	43085	136660.01	5.575	Si
SLU 78	7.5	-76422	-17322.57	39356	136962.81	7.907	Si

Verifica a pressoflessione nel piano secondo D.M. 17-01-18 NTC §7.8.2.2.1 in combinazioni sismiche, γM = 2

Comb.	Quota	N	M	σ0	Mu	c.s.	Verifica
SLV 15	5	-52214	-47793.25	26890	141208.43	2.955	Si
SLV 15	7.5	-38502	13155.45	19828	111841.29	8.502	Si
SLV 14	5	-55170	-55783.92	28412	146819.56	2.632	Si
SLV 14	7.5	-40548	11333.7	20882	116571.14	10.285	Si
SLV 10	5	-59739	-39965.43	30765	154989.44	3.878	Si
SLV 10	7.5	-49133	-7036.23	25303	135088.11	19.199	Si
SLV 2	5	-58370	16047.33	30060	152605.98	9.51	Si
SLV 2	7.5	-58258	-35079.32	30002	152408.09	4.345	Si
SLV 13	5	-55170	-55783.92	28412	146819.56	2.632	Si
SLV 13	7.5	-40548	11333.7	20882	116571.14	10.285	Si
SLV 9	5	-59739	-39965.43	30765	154989.44	3.878	Si
SLV 9	7.5	-49133	-7036.23	25303	135088.11	19.199	Si
SLV 16	5	-52214	-47793.25	26890	141208.43	2.955	Si
SLV 16	7.5	-38502	13155.45	19828	111841.29	8.502	Si
SLV 4	5	-55414	24038	28538	147271.36	6.127	Si
SLV 4	7.5	-56213	-33257.57	28949	148737.16	4.472	Si
SLV 3	5	-55414	24038	28538	147271.36	6.127	Si
SLV 3	7.5	-56213	-33257.57	28949	148737.16	4.472	Si

Comb.	Quota	N	M	σ0	Mu	c.s.	Verifica
SLV 1	5	-58370	16047.33	30060	152605.98	9.51	Si
SLV 1	7.5	-58258	-35079.32	30002	152408.09	4.345	Si

Verifica a taglio nel piano secondo D.M. 17-01-18 (N.T.C.) §7.8.2.2.2 con rottura per scorrimento in combinazioni non sismiche, γM = 3

Comb.	Quota	N	V par	M	σ0	σN	l'	fvd	Vt scorr.	Vt fess.diag.	Vt,lim	c.s.	Verifica
SLU 81	5	-81180	-2509	-25627.69		41807	6.935	10833	21036			8.38	Si
SLU 81	7.5	-73490	-2605	-16713.37		37846	6.935	10602	20586			7.9	Si
SLU 39	5	-68377	-2060	-22664.85		35213	6.935	10251	19905			9.66	Si
SLU 39	7.5	-63095	-2207	-14382.92		32493	6.935	9888	19201			8.7	Si
SLU 18	5	-60903	-1859	-19225.78		31364	6.935	9737	18908			10.17	Si
SLU 18	7.5	-55053	-1901	-12512.11		28351	6.935	9336	18128			9.54	Si
SLU 43	5	-64024	-2174	-16769.36		32971	6.935	9952	19324			8.89	Si
SLU 43	7.5	-54234	-2075	-12236.69		27930	6.935	9280	18019			8.68	Si
SLU 22	5	-58694	-1927	-17245.58		30227	6.935	9586	18614			9.66	Si
SLU 22	7.5	-51882	-1983	-11777.06		26719	6.935	9118	17705			8.93	Si
SLU 74	5	-81733	-2106	-24337.7		42091	6.935	10833	21036			9.99	Si
SLU 74	7.5	-73751	-2292	-16971.75		37981	6.935	10620	20621			9	Si
SLU 60	5	-73706	-2308	-22188.63		37958	6.935	10617	20615			8.93	Si
SLU 60	7.5	-65447	-2300	-14842.56		33704	6.935	10049	19514			8.49	Si
SLU 66	5	-74955	-2012	-20544.21		38601	6.935	10702	20782			10.33	Si
SLU 66	7.5	-65902	-2135	-15147.65		33939	6.935	10081	19575			9.17	Si
SLU 83	5	-83532	-2159	-25716.04		43018	6.935	10833	21036			9.74	Si
SLU 83	7.5	-76016	-2348	-17516.65		39147	6.935	10775	20923			8.91	Si
SLU 64	5	-71498	-2376	-20208.42		36820	6.935	10465	20321			8.55	Si
SLU 64	7.5	-62277	-2381	-14107.51		32072	6.935	9832	19091			8.02	Si

Verifica a taglio nel piano secondo D.M. 17-01-18 (N.T.C.) §7.8.2.2.2 con rottura per scorrimento in combinazioni sismiche, γM = 2

Comb.	Quota	N	V par	M	σ0	σN	l'	fvd	Vt scorr.	Vt fess.diag.	Vt,lim	c.s.	Verifica
SLV 1	5	-58370	35366	16047.33		30060	6.935	14345	27856			0.79	No, Vu<V
SLV 1	7.5	-58258	29564	-35079.32		30002	6.935	14334	27833			0.94	No, Vu<V
SLV 12	5	-49885	-12833	-13329.86		25690	6.935	13471	26159			2.04	Si
SLV 12	7.5	-42314	-10211	-963.73		21791	6.935	12692	24645			2.41	Si
SLV 16	5	-52214	-38986	-47793.25		26890	6.935	13711	26624			0.68	No, Vu<V
SLV 16	7.5	-38502	-33182	13155.45		19828	6.935	12299	23882			0.72	No, Vu<V
SLV 3	5	-55414	35452	24038		28538	6.935	14041	27265			0.77	No, Vu<V
SLV 3	7.5	-56213	30230	-33257.57		28949	6.935	14123	27424			0.91	No, Vu<V
SLV 11	5	-49885	-12833	-13329.86		25690	6.935	13471	26159			2.04	Si
SLV 11	7.5	-42314	-10211	-963.73		21791	6.935	12692	24645			2.41	Si
SLV 15	5	-52214	-38986	-47793.25		26890	6.935	13711	26624			0.68	No, Vu<V
SLV 15	7.5	-38502	-33182	13155.45		19828	6.935	12299	23882			0.72	No, Vu<V
SLV 4	5	-55414	35452	24038		28538	6.935	14041	27265			0.77	No, Vu<V
SLV 4	7.5	-56213	30230	-33257.57		28949	6.935	14123	27424			0.91	No, Vu<V
SLV 2	5	-58370	35366	16047.33		30060	6.935	14345	27856			0.79	No, Vu<V
SLV 2	7.5	-58258	29564	-35079.32		30002	6.935	14334	27833			0.94	No, Vu<V
SLV 13	5	-55170	-39071	-55783.92		28412	6.935	14016	27216			0.7	No, Vu<V
SLV 13	7.5	-40548	-33848	11333.7		20882	6.935	12510	24291			0.72	No, Vu<V
SLV 14	5	-55170	-39071	-55783.92		28412	6.935	14016	27216			0.7	No, Vu<V
SLV 14	7.5	-40548	-33848	11333.7		20882	6.935	12510	24291			0.72	No, Vu<V

Verifica a pressoflessione fuori piano D.M. 17-01-18 (N.T.C.)

quota 6.775 Wa 0.05 denominatore 8 γM = 2

Comb.	fd	Sa	σ0	N	M	Mc	Coeff.s.	Verifica
SLV 15	143750	0.39	23402	-45441	741.02	5143.35	6.94	Si
SLV 16	143750	0.39	23402	-45441	741.02	5143.35	6.94	Si
SLV 11	143750	0.39	23476	-45586	741.02	5155.88	6.96	Si
SLV 12	143750	0.39	23476	-45586	741.02	5155.88	6.96	Si
SLV 14	143750	0.39	24614	-47795	741.02	5343.37	7.21	Si
SLV 13	143750	0.39	24614	-47795	741.02	5343.37	7.21	Si
SLV 8	143750	0.39	24753	-48065	741.02	5365.88	7.24	Si
SLV 7	143750	0.39	24753	-48065	741.02	5365.88	7.24	Si
SLV 9	143750	0.39	27517	-53432	741.02	5795.86	7.82	Si
SLV 10	143750	0.39	27517	-53432	741.02	5795.86	7.82	Si

Verifica dei meccanismi locali di collasso con analisi cinematica lineare

forza di aggancio al piano = 0 quota mezzeria = 6.775 Wa = 0.05 Ta = 0.0752

Comb.	N top	N base	V orto	α0	M*	e*	a0*	aLim	Verifica
SLV 11	-39824	-49885	-634	0.031	5031	0.945	0.47634	8.10374	No
SLV 12	-39824	-49885	-634	0.031	5031	0.945	0.47634	8.10374	No
SLV 8	-43665	-50845	-654	0.031	5420.7	0.948	0.47851	8.10374	No
SLV 7	-43665	-50845	-654	0.031	5420.7	0.948	0.47851	8.10374	No
SLV 9	-50999	-59739	674	0.032	6165.5	0.954	0.48655	8.10374	No
SLV 10	-50999	-59739	674	0.032	6165.5	0.954	0.48655	8.10374	No
SLV 6	-54841	-60699	654	0.033	6555.8	0.956	0.49741	8.10374	No
SLV 5	-54841	-60699	654	0.033	6555.8	0.956	0.49741	8.10374	No
SLV 13	-42607	-55170	239	0.04	5313.3	0.947	0.60671	9.20386	No
SLV 14	-42607	-55170	239	0.04	5313.3	0.947	0.60671	9.20386	No

Tabella dei coefficienti di sicurezza minimi

Stato limite	Coeff.s.	Comb.	Verifica
PF_SLU	5.3	SLU 84	Si
V_SLU	7.902	SLU 81	Si
PF_SLV	2.632	SLV 13	Si
V_SLV	0.683	SLV 15	No
PFFP_SLV	6.941	SLV 15	Si
R_SLV	0.059	SLV 11	No

Maschio 132

Verifiche condotte secondo D.M. 17-01-18 (N.T.C.)

Dati geometrici

X ini.	Y ini.	X fin.	Y fin.	Quota i.	Quota.s	l	Sp.	h netta	h ini.	h fin.	a	a.s.,sx	a.s.,dx
-4.93	1.141	-11.865	1.141	L4	L5	6.935	0.28	3.55	3.55	3.55			

Caratteristiche del materiale

(Circolare 7 21-01-19 C8.5.I) Muratura in mattoni pieni e malta di calce LC2_Corti

fb	fk	fvk0	fmedio	τ0	fv0	μ	ϕ	fv,lim	E	G	FC
600000			345000	9000	20000	0.58	0.77	32500	320000000	128000000	1.2

Verifica a pressoflessione nel piano secondo D.M. 17-01-18 NTC §7.8.2.2.1 in combinazioni non sismiche, γM = 3

Comb.	Quota	N	M	σ0	Mu	c.s.	Verifica
SLU 82	5	-81502	28531.77	41972	136991	4.801	Si
SLU 82	7.5	-84062	7698.41	43291	136576.29	17.741	Si
SLU 78	5	-85057	28036.67	43803	136337.57	4.863	Si
SLU 78	7.5	-87350	7266.48	44984	135622.45	18.664	Si
SLU 80	5	-83973	27877.49	43245	136595.65	4.9	Si
SLU 80	7.5	-86181	7047.22	44382	136015.97	19.301	Si
SLU 79	5	-84320	27802.34	43423	136518.76	4.91	Si
SLU 79	7.5	-86060	7463.46	44320	136053.01	18.229	Si
SLU 83	5	-84604	29002.18	43570	136451.75	4.705	Si
SLU 83	7.5	-86964	7962.3	44785	135758.87	17.05	Si
SLU 81	5	-81849	28456.62	42151	136951.66	4.813	Si
SLU 81	7.5	-83942	8114.64	43229	136602.18	16.834	Si
SLU 77	5	-85404	27961.52	43982	136244.19	4.873	Si
SLU 77	7.5	-87230	7682.71	44922	135665.66	17.659	Si
SLU 84	5	-84257	29077.33	43391	136532.97	4.696	Si
SLU 84	7.5	-87084	7546.06	44847	135717.07	17.985	Si
SLU 74	5	-82649	27415.96	42563	136840.76	4.991	Si
SLU 74	7.5	-84208	7835.05	43366	136544.13	17.427	Si
SLU 75	5	-82302	27491.11	42385	136892.26	4.98	Si
SLU 75	7.5	-84328	7418.82	43428	136516.84	18.401	Si

Verifica a pressoflessione nel piano secondo D.M. 17-01-18 NTC §7.8.2.2.1 in combinazioni sismiche, γM = 2

Comb.	Quota	N	M	σ0	Mu	c.s.	Verifica
SLV 15	5	-56950	-18869.17	29329	150075.58	7.953	Si
SLV 15	7.5	-64226	28489.69	33075	162418.56	5.701	Si
SLV 1	5	-54004	54396.8	27812	144637.49	2.659	Si
SLV 1	7.5	-45918	-17595.73	23647	128406.97	7.298	Si
SLV 3	5	-53830	48696.14	27722	144306.95	2.963	Si
SLV 3	7.5	-46124	-16354.46	23753	128843.47	7.878	Si
SLV 6	5	-55301	37399.7	28479	147061.31	3.932	Si
SLV 6	7.5	-52014	-3348.42	26786	140819.41	42.055	Si
SLV 2	5	-54004	54396.8	27812	144637.49	2.659	Si
SLV 2	7.5	-45918	-17595.73	23647	128406.97	7.298	Si
SLV 14	5	-57125	-13168.51	29419	150390.18	11.42	Si
SLV 14	7.5	-64020	27248.43	32969	162090.88	5.949	Si
SLV 13	5	-57125	-13168.51	29419	150390.18	11.42	Si
SLV 13	7.5	-64020	27248.43	32969	162090.88	5.949	Si
SLV 16	5	-56950	-18869.17	29329	150075.58	7.953	Si
SLV 16	7.5	-64226	28489.69	33075	162418.56	5.701	Si
SLV 5	5	-55301	37399.7	28479	147061.31	3.932	Si
SLV 5	7.5	-52014	-3348.42	26786	140819.41	42.055	Si
SLV 4	5	-53830	48696.14	27722	144306.95	2.963	Si
SLV 4	7.5	-46124	-16354.46	23753	128843.47	7.878	Si

Verifica a taglio nel piano secondo D.M. 17-01-18 (N.T.C.) §7.8.2.2.2 con rottura per scorrimento in combinazioni non sismiche, γM = 3

Comb.	Quota	N	V par	M	σ0	σN	l'	fvd	Vt scorr.	Vt fess.diag.	Vt,lim	c.s.	Verifica
SLU 77	5	-85404	1265	27961.52		43982	6.935	10833	21036			16.63	Si
SLU 77	7.5	-87230	199	7682.71		44922	6.935	10833	21036			105.58	Si
SLU 37	5	-71630	1300	24409.76		36889	6.935	10474	20338			15.64	Si
SLU 37	7.5	-74323	469	6166.97		38275	6.935	10659	20698			44.1	Si
SLU 69	5	-78312	1239	23888.91		40330	6.935	10833	21036			16.98	Si
SLU 69	7.5	-78070	253	6874.21		40205	6.935	10833	21036			83.05	Si
SLU 35	5	-72715	1196	24568.94		37447	6.935	10549	20483			17.13	Si
SLU 35	7.5	-75492	378	6386.22		38877	6.935	10739	20853			55.13	Si
SLU 71	5	-77227	1343	23729.73		39771	6.935	10833	21036			15.66	Si
SLU 71	7.5	-76901	344	6654.96		39603	6.935	10833	21036			61.09	Si
SLU 44	5	-63332	26	19059.72		32615	6.935	9904	19232			743.77	Si
SLU 44	7.5	-61727	-1163	5639.88		31788	6.935	9794	19018			16.35	Si
SLU 52	5	-70424	52	23132.34		36267	6.935	10391	20178			390.27	Si
SLU 52	7.5	-70886	-1217	6448.37		36505	6.935	10423	20239			16.63	Si
SLU 27	5	-65623	1170	20496.33		33795	6.935	10062	19537			16.7	Si
SLU 27	7.5	-66333	432	5577.72		34160	6.935	10110	19632			45.41	Si
SLU 79	5	-84320	1369	27802.34		43423	6.935	10833	21036			15.37	Si
SLU 79	7.5	-86060	290	7463.46		44320	6.935	10833	21036			72.46	Si
SLU 29	5	-64538	1274	20337.15		33236	6.935	9987	19393			15.22	Si
SLU 29	7.5	-65164	523	5358.47		33558	6.935	10030	19476			37.21	Si

Verifica a taglio nel piano secondo D.M. 17-01-18 (N.T.C.) §7.8.2.2.2 con rottura per scorrimento in combinazioni sismiche, γM = 2

Comb.	Quota	N	V par	M	σ0	σN	l'	fvd	Vt scorr.	Vt fess.diag.	Vt,lim	c.s.	Verifica
SLV 13	5	-57125	-35372	-13168.51		29419	6.935	14217	27607			0.78	No, Vu<V
SLV 13	7.5	-64020	-31415	27248.43		32969	6.935	14927	28986			0.92	No, Vu<V
SLV 14	5	-57125	-35372	-13168.51		29419	6.935	14217	27607			0.78	No, Vu<V
SLV 14	7.5	-64020	-31415	27248.43		32969	6.935	14927	28986			0.92	No, Vu<V
SLV 3	5	-53830	36637	48696.14		27722	6.935	13878	26948			0.74	No, Vu<V

Comb.	Quota	N	V par	M	σ0	σN	l'	fvd	Vt scorr.	Vt fess.diag.	Vt,lim	c.s.	Verifica
SLV 3	7.5	-46124	30892	-16354.46		23753	6.935	13084	25406			0.82	No, Vu<V
SLV 4	5	-53830	36637	48696.14		27722	6.935	13878	26948			0.74	No, Vu<V
SLV 4	7.5	-46124	30892	-16354.46		23753	6.935	13084	25406			0.82	No, Vu<V
SLV 2	5	-54004	38225	54396.8		27812	6.935	13896	26983			0.71	No, Vu<V
SLV 2	7.5	-45918	31951	-17595.73		23647	6.935	13063	25365			0.79	No, Vu<V
SLV 15	5	-56950	-36960	-18869.17		29329	6.935	14199	27572			0.75	No, Vu<V
SLV 15	7.5	-64226	-32475	28489.69		33075	6.935	14948	29027			0.89	No, Vu<V
SLV 5	5	-55301	14320	37399.7		28479	6.935	14029	27242			1.9	Si
SLV 5	7.5	-52014	11009	-3348.42		26786	6.935	13691	26584			2.41	Si
SLV 6	5	-55301	14320	37399.7		28479	6.935	14029	27242			1.9	Si
SLV 6	7.5	-52014	11009	-3348.42		26786	6.935	13691	26584			2.41	Si
SLV 1	5	-54004	38225	54396.8		27812	6.935	13896	26983			0.71	No, Vu<V
SLV 1	7.5	-45918	31951	-17595.73		23647	6.935	13063	25365			0.79	No, Vu<V
SLV 16	5	-56950	-36960	-18869.17		29329	6.935	14199	27572			0.75	No, Vu<V
SLV 16	7.5	-64226	-32475	28489.69		33075	6.935	14948	29027			0.89	No, Vu<V

Verifica a pressoflessione fuori piano D.M. 17-01-18 (N.T.C.)

quota 6.775 Wa 0.05 denominatore 8 γM = 2

Comb.	fd	Sa	σ0	N	M	Mc	Coeff.s.	Verifica
SLV 6	143750	0.39	26398	-51259	741.02	5625.91	7.59	Si
SLV 5	143750	0.39	26398	-51259	741.02	5625.91	7.59	Si
SLV 1	143750	0.39	27012	-52451	741.02	5719.83	7.72	Si
SLV 2	143750	0.39	27012	-52451	741.02	5719.83	7.72	Si
SLV 9	143750	0.39	27553	-53503	741.02	5801.35	7.83	Si
SLV 10	143750	0.39	27553	-53503	741.02	5801.35	7.83	Si
SLV 3	143750	0.39	28693	-55717	741.02	5968.57	8.05	Si
SLV 4	143750	0.39	28693	-55717	741.02	5968.57	8.05	Si
SLV 13	143750	0.39	30864	-59931	741.02	6270.99	8.46	Si
SLV 14	143750	0.39	30864	-59931	741.02	6270.99	8.46	Si

Verifica dei meccanismi locali di collasso con analisi cinematica lineare

forza di aggancio al piano = 0 quota mezzeria = 6.775 Wa = 0.05 Ta = 0.0752

Comb.	N top	N base	V orto	α0	M*	e*	a0*	aLim	Verifica
SLV 7	-47624	-54718	-1095	0.024	5822.6	0.951	0.36097	8.10374	No
SLV 8	-47624	-54718	-1095	0.024	5822.6	0.951	0.36097	8.10374	No
SLV 11	-50776	-55654	-1106	0.024	6142.8	0.954	0.37073	8.10374	No
SLV 12	-50776	-55654	-1106	0.024	6142.8	0.954	0.37073	8.10374	No
SLV 5	-53810	-55301	1141	0.025	6451.1	0.956	0.37265	8.10374	No
SLV 6	-53810	-55301	1141	0.025	6451.1	0.956	0.37265	8.10374	No
SLV 10	-56963	-56237	1131	0.025	6771.6	0.958	0.38567	8.10374	No
SLV 9	-56963	-56237	1131	0.025	6771.6	0.958	0.38567	8.10374	No
SLV 2	-47967	-54004	370	0.037	5857.4	0.952	0.56688	9.20386	No
SLV 1	-47967	-54004	370	0.037	5857.4	0.952	0.56688	9.20386	No

Tabella dei coefficienti di sicurezza minimi

Stato limite	Coeff.s.	Comb.	Verifica
PF_SLU	4.696	SLU 84	Si
V_SLU	15.219	SLU 29	Si
PF_SLV	2.659	SLV 1	Si
V_SLV	0.706	SLV 1	No
PFFP_SLV	7.592	SLV 5	Si
R_SLV	0.045	SLV 7	No

Maschio 133

Verifiche condotte secondo D.M. 17-01-18 (N.T.C.)

Dati geometrici

X ini.	Y ini.	X fin.	Y fin.	Quota i.	Quota.s	l	Sp.	h netta	h ini.	h fin.	a	a.s.,sx	a.s.,dx
-0.117	1.141	-4.13	1.141	L4	L5	4.013	0.28	3.55	3.55	3.55			

Caratteristiche del materiale

(Circolare 7 21-01-19 C8.5.I) Muratura in mattoni pieni e malta di calce LC2_Corti

fb	fk	fvk0	fmedio	τ0	fv0	μ	ϕ	fv,lim	E	G	FC
600000			345000	9000	20000	0.58	0.77	32500	320000000	128000000	1.2

Verifica a pressoflessione nel piano secondo D.M. 17-01-18 NTC §7.8.2.2.1 in combinazioni non sismiche, γM = 3

Comb.	Quota	N	M	σ0	Mu	c.s.	Verifica
SLU 75	5	-35365	-16277.94	31476	43536.04	2.675	Si
SLU 75	7.1	-36890	-1041.55	32834	44180.32	42.418	Si
SLU 78	5	-36171	-16446.71	32194	43889.43	2.669	Si
SLU 78	7.1	-37817	-796.98	33659	44522.04	55.863	Si
SLU 84	5	-35903	-16957.04	31955	43775.12	2.582	Si
SLU 84	7.1	-37861	-933.13	33698	44537.18	47.729	Si
SLU 74	5	-35449	-16320.25	31551	43574.13	2.67	Si
SLU 74	7.1	-37050	-1008.16	32976	44242.05	43.884	Si
SLU 83	5	-35987	-16999.35	32030	43811.23	2.577	Si
SLU 83	7.1	-38021	-899.74	33840	44592.09	49.561	Si
SLU 82	5	-35097	-16788.27	31238	43412.25	2.586	Si
SLU 82	7.1	-36934	-1177.7	32873	44197.23	37.528	Si
SLU 81	5	-35180	-16830.58	31312	43451.33	2.582	Si
SLU 81	7.1	-37094	-1144.31	33015	44258.66	38.677	Si
SLU 79	5	-35755	-16338.26	31824	43710.6	2.675	Si
SLU 79	7.1	-37394	-850.95	33283	44370.79	52.143	Si
SLU 80	5	-35671	-16295.95	31749	43673.64	2.68	Si
SLU 80	7.1	-37234	-884.34	33140	44311.47	50.107	Si

Comb.	Quota	N	M	σ0	Mu	c.s.	Verifica
SLU 77	5	-36255	-16489.02	32269	43924.55	2.664	Si
SLU 77	7.1	-37977	-763.59	33802	44577.26	58.379	Si

Verifica a pressoflessione nel piano secondo D.M. 17-01-18 NTC §7.8.2.2.1 in combinazioni sismiche, γM = 2

Comb.	Quota	N	M	σ0	Mu	c.s.	Verifica
SLV 2	5	-18193	2962.23	16192	31663.55	10.689	Si
SLV 2	7.1	-12159	-8815.39	10822	22233.65	2.522	Si
SLV 1	5	-18193	2962.23	16192	31663.55	10.689	Si
SLV 1	7.1	-12159	-8815.39	10822	22233.65	2.522	Si
SLV 3	5	-13889	5513.28	12362	25047.25	4.543	Si
SLV 3	7.1	-11821	-12494.43	10521	21673.83	1.735	Si
SLV 16	5	-30797	-24911.77	27410	47926.79	1.924	Si
SLV 16	7.1	-37387	6096.42	33276	54582.38	8.953	Si
SLV 14	5	-35100	-27462.82	31241	52416.43	1.909	Si
SLV 14	7.1	-37725	9775.46	33577	54889.55	5.615	Si
SLV 4	5	-13889	5513.28	12362	25047.25	4.543	Si
SLV 4	7.1	-11821	-12494.43	10521	21673.83	1.735	Si
SLV 13	5	-35100	-27462.82	31241	52416.43	1.909	Si
SLV 13	7.1	-37725	9775.46	33577	54889.55	5.615	Si
SLV 15	5	-30797	-24911.77	27410	47926.79	1.924	Si
SLV 15	7.1	-37387	6096.42	33276	54582.38	8.953	Si
SLV 10	5	-34203	-19790.27	30442	51525.46	2.604	Si
SLV 10	7.1	-29171	7560.88	25964	46090.56	6.096	Si
SLV 9	5	-34203	-19790.27	30442	51525.46	2.604	Si
SLV 9	7.1	-29171	7560.88	25964	46090.56	6.096	Si

Verifica a taglio nel piano secondo D.M. 17-01-18 (N.T.C.) §7.8.2.2.2 con rottura per scorrimento in combinazioni non sismiche, γM = 3

Comb.	Quota	N	V par	M	σ0	σN	l'	fvd	Vt scorr.	Vt fess.diag.	Vt,lim	c.s.	Verifica
SLU 84	5	-35903	-15026	-16957.04		31955	4.0126	9816	11029			0.73	No, Vu<V
SLU 84	7.1	-37861	-15045	-933.13		33698	4.0126	10049	11290			0.75	No, Vu<V
SLU 42	5	-29925	-13418	-14605.19		26635	4.0126	9107	10232			0.76	No, Vu<V
SLU 42	7.1	-32324	-13436	-275.99		28770	4.0126	9392	10552			0.79	No, Vu<V
SLU 78	5	-36171	-14550	-16446.71		32194	4.0126	9848	11065			0.76	No, Vu<V
SLU 78	7.1	-37817	-14569	-796.98		33659	4.0126	10043	11284			0.77	No, Vu<V
SLU 74	5	-35449	-14359	-16320.25		31551	4.0126	9762	10968			0.76	No, Vu<V
SLU 74	7.1	-37050	-14363	-1008.16		32976	4.0126	9952	11182			0.78	No, Vu<V
SLU 77	5	-36255	-14671	-16489.02		32269	4.0126	9858	11076			0.75	No, Vu<V
SLU 77	7.1	-37977	-14675	-763.59		33802	4.0126	10062	11306			0.77	No, Vu<V
SLU 41	5	-30009	-13538	-14647.5		26710	4.0126	9117	10243			0.76	No, Vu<V
SLU 41	7.1	-32484	-13542	-242.6		28912	4.0126	9411	10573			0.78	No, Vu<V
SLU 82	5	-35097	-14714	-16788.27		31238	4.0126	9721	10921			0.74	No, Vu<V
SLU 82	7.1	-36934	-14733	-1177.7		32873	4.0126	9939	11166			0.76	No, Vu<V
SLU 83	5	-35987	-15146	-16999.35		32030	4.0126	9826	11040			0.73	No, Vu<V
SLU 83	7.1	-38021	-15151	-899.74		33840	4.0126	10068	11311			0.75	No, Vu<V
SLU 79	5	-35755	-14478	-16338.26		31824	4.0126	9799	11009			0.76	No, Vu<V
SLU 79	7.1	-37394	-14482	-850.95		33283	4.0126	9993	11228			0.78	No, Vu<V
SLU 81	5	-35180	-14835	-16830.58		31312	4.0126	9731	10933			0.74	No, Vu<V
SLU 81	7.1	-37094	-14839	-1144.31		33015	4.0126	9958	11188			0.75	No, Vu<V

Verifica a taglio nel piano secondo D.M. 17-01-18 (N.T.C.) §7.8.2.2.2 con rottura per scorrimento in combinazioni sismiche, γM = 2

Comb.	Quota	N	V par	M	σ0	σN	l'	fvd	Vt scorr.	Vt fess.diag.	Vt,lim	c.s.	Verifica
SLV 16	5	-30797	-24350	-24911.77		30618	3.5922	14457	14541			0.6	No, Vu<V
SLV 16	7.1	-37387	-23589	6096.42		33276	4.0126	14989	16840			0.71	No, Vu<V
SLV 13	5	-35100	-25872	-27462.82		34141	3.6717	15162	15587			0.6	No, Vu<V
SLV 13	7.1	-37725	-24672	9775.46		33577	4.0126	15049	16908			0.69	No, Vu<V
SLV 14	5	-35100	-25872	-27462.82		34141	3.6717	15162	15587			0.6	No, Vu<V
SLV 14	7.1	-37725	-24672	9775.46		33577	4.0126	15049	16908			0.69	No, Vu<V
SLV 12	5	-19858	-11353	-11286.79		17675	4.0126	11868	13334			1.17	Si
SLV 12	7.1	-28044	-11794	-4702.59		24961	4.0126	13326	14972			1.27	Si
SLV 15	5	-30797	-24350	-24911.77		30618	3.5922	14457	14541			0.6	No, Vu<V
SLV 15	7.1	-37387	-23589	6096.42		33276	4.0126	14989	16840			0.71	No, Vu<V
SLV 4	5	-13889	7712	5513.28		12362	4.0126	10806	12141			1.57	Si
SLV 4	7.1	-11821	6506	-12494.43		14824	2.8479	11298	9009			1.38	Si
SLV 9	5	-34203	-16425	-19790.27		30442	4.0126	14422	16203			0.99	No, Vu<V
SLV 9	7.1	-29171	-15400	7560.88		25964	4.0126	13526	15197			0.99	No, Vu<V
SLV 11	5	-19858	-11353	-11286.79		17675	4.0126	11868	13334			1.17	Si
SLV 11	7.1	-28044	-11794	-4702.59		24961	4.0126	13326	14972			1.27	Si
SLV 3	5	-13889	7712	5513.28		12362	4.0126	10806	12141			1.57	Si
SLV 3	7.1	-11821	6506	-12494.43		14824	2.8479	11298	9009			1.38	Si
SLV 10	5	-34203	-16425	-19790.27		30442	4.0126	14422	16203			0.99	No, Vu<V
SLV 10	7.1	-29171	-15400	7560.88		25964	4.0126	13526	15197			0.99	No, Vu<V

Verifica a pressoflessione fuori piano D.M. 17-01-18 (N.T.C.)

quota 6.775 Wa 0.05 denominatore 8 γM = 2

Comb.	fd	Sa	σ0	N	M	Mc	Coeff.s.	Verifica
SLV 4	143750	0.39	10837	-12176	428.76	1553.47	3.62	Si
SLV 3	143750	0.39	10837	-12176	428.76	1553.47	3.62	Si
SLV 1	143750	0.39	11728	-13177	428.76	1667.67	3.89	Si
SLV 2	143750	0.39	11728	-13177	428.76	1667.67	3.89	Si
SLV 7	143750	0.39	17781	-19978	428.76	2389.85	5.57	Si
SLV 8	143750	0.39	17781	-19978	428.76	2389.85	5.57	Si
SLV 5	143750	0.39	20749	-23312	428.76	2709.52	6.32	Si
SLV 6	143750	0.39	20749	-23312	428.76	2709.52	6.32	Si
SLV 11	143750	0.39	24623	-27665	428.76	3092.59	7.21	Si
SLV 12	143750	0.39	24623	-27665	428.76	3092.59	7.21	Si

Verifica dei meccanismi locali di collasso con analisi cinematica lineare

forza di aggancio al piano = 0 quota mezzeria = 6.775 Wa = 0.05 Ta = 0.0752

Comb.	N top	N base	V orto	α0	M*	e*	a0*	aLim	Verifica

Comb.	N top	N base	V orto	α0	M*	e*	a0*	aLim	Verifica
SLV 6	-19561	-29131	408	0.028	2558.2	0.939	0.43255	8.10374	No
SLV 5	-19561	-29131	408	0.028	2558.2	0.939	0.43255	8.10374	No
SLV 11	-24561	-19858	-416	0.03	3065	0.947	0.45537	8.10374	No
SLV 12	-24561	-19858	-416	0.03	3065	0.947	0.45537	8.10374	No
SLV 8	-20906	-14786	-373	0.03	2694.5	0.941	0.46299	8.10374	No
SLV 7	-20906	-14786	-373	0.03	2694.5	0.941	0.46299	8.10374	No
SLV 9	-23215	-34203	365	0.031	2928.5	0.945	0.47829	8.10374	No
SLV 10	-23215	-34203	365	0.031	2928.5	0.945	0.47829	8.10374	No
SLV 15	-28354	-30797	-193	0.038	3450.1	0.952	0.57716	9.20386	No
SLV 16	-28354	-30797	-193	0.038	3450.1	0.952	0.57716	9.20386	No

Tabella dei coefficienti di sicurezza minimi

Stato limite	Coeff.s.	Comb.	Verifica
PF_SLU	2.577	SLU 83	Si
V_SLU	0.729	SLU 83	No
PF_SLV	1.735	SLV 3	Si
V_SLV	0.597	SLV 15	No
PFFP_SLV	3.623	SLV 3	Si
R_SLV	0.053	SLV 5	No

Maschio 134

Verifiche condotte secondo D.M. 17-01-18 (N.T.C.)

Dati geometrici

X ini.	Y ini.	X fin.	Y fin.	Quota i.	Quota.s	l	Sp.	h netta	h ini.	h fin.	a	a.s.,sx	a.s.,dx
-10.74	3.3	-15.01	3.3	L4	L5	4.27	0.14	3.55	3.55	3.55			

Caratteristiche del materiale

(Circolare 7 21-01-19 C8.5.I) Muratura in mattoni pieni e malta di calce LC2_Corti

fb	fk	fvk0	fmedio	τ0	fv0	μ	ϕ	fv,lim	E	G	FC
600000			345000	9000	20000	0.58	0.77	32500	320000000	128000000	1.2

Verifica a pressoflessione nel piano secondo D.M. 17-01-18 NTC §7.8.2.2.1 in combinazioni non sismiche, γM = 3

Comb.	Quota	N	M	σ0	Mu	c.s.	Verifica
SLU 83	5	-39149	-2325.06	65488	16386.57	7.048	Si
SLU 83	6.9	-35065	-5138.71	58657	20955.55	4.078	Si
SLU 75	5	-38081	-2162.27	63703	17721.67	8.196	Si
SLU 75	6.9	-33975	-5015.58	56834	21927.34	4.372	Si
SLU 74	5	-38111	-2155.85	63752	17686.24	8.204	Si
SLU 74	6.9	-34001	-5016.63	56877	21905.64	4.367	Si
SLU 79	5	-38237	-2054.85	63964	17532.92	8.532	Si
SLU 79	6.9	-34066	-5036.66	56986	21850.41	4.338	Si
SLU 77	5	-38770	-2123.26	64855	16871.48	7.946	Si
SLU 77	6.9	-34594	-5115.46	57869	21388.23	4.181	Si
SLU 80	5	-38208	-2061.26	63914	17568.68	8.523	Si
SLU 80	6.9	-34040	-5035.61	56943	21872.26	4.344	Si
SLU 78	5	-38741	-2129.67	64806	16908.62	7.94	Si
SLU 78	6.9	-34568	-5114.4	57826	21411.26	4.186	Si
SLU 84	5	-39119	-2331.47	65439	16424.68	7.045	Si
SLU 84	6.9	-35039	-5137.66	58614	20979.64	4.084	Si
SLU 82	5	-38460	-2364.07	64336	17259.62	7.301	Si
SLU 82	6.9	-34446	-5038.83	57622	21520.2	4.271	Si
SLU 81	5	-38489	-2357.66	64385	17223.2	7.305	Si
SLU 81	6.9	-34472	-5039.89	57664	21497.44	4.265	Si

Verifica a pressoflessione nel piano secondo D.M. 17-01-18 NTC §7.8.2.2.1 in combinazioni sismiche, γM = 2

Comb.	Quota	N	M	σ0	Mu	c.s.	Verifica
SLV 4	5	-22560	7335	37739	33289.1	4.538	Si
SLV 4	6.9	-23646	-7993.5	39556	34141.34	4.271	Si
SLV 3	5	-22560	7335	37739	33289.1	4.538	Si
SLV 3	6.9	-23646	-7993.5	39556	34141.34	4.271	Si
SLV 14	5	-29082	-9878.98	48649	37369.07	3.783	Si
SLV 14	6.9	-21750	1218.98	36384	32609.14	26.751	Si
SLV 15	5	-28995	-8710.99	48503	37330.68	4.285	Si
SLV 15	6.9	-22151	2317.25	37055	32950.57	14.22	Si
SLV 6	5	-25002	-811.75	41824	35108.1	43.25	Si
SLV 6	6.9	-22255	-6764.31	37228	33037.15	4.884	Si
SLV 1	5	-22648	6167.01	37885	33360.5	5.41	Si
SLV 1	6.9	-23246	-9091.76	38886	33834.95	3.721	Si
SLV 16	5	-28995	-8710.99	48503	37330.68	4.285	Si
SLV 16	6.9	-22151	2317.25	37055	32950.57	14.22	Si
SLV 2	5	-22648	6167.01	37885	33360.5	5.41	Si
SLV 2	6.9	-23246	-9091.76	38886	33834.95	3.721	Si
SLV 13	5	-29082	-9878.98	48649	37369.07	3.783	Si
SLV 13	6.9	-21750	1218.98	36384	32609.14	26.751	Si
SLV 5	5	-25002	-811.75	41824	35108.1	43.25	Si
SLV 5	6.9	-22255	-6764.31	37228	33037.15	4.884	Si

Verifica a taglio nel piano secondo D.M. 17-01-18 (N.T.C.) §7.8.2.2.2 con rottura per scorrimento in combinazioni non sismiche, γM = 3

Comb.	Quota	N	V par	M	σ0	σN	l'	fvd	Vt scorr.	Vt fess.diag.	Vt,lim	c.s.	Verifica
SLU 69	5	-35105	-109	-1568.81		58724	4.27	10833	6476			59.53	Si
SLU 69	6.9	-30880	-109	-4646.75		51656	4.27	10833	6476			59.45	Si
SLU 48	5	-31440	-111	-1155.99		52592	4.27	10833	6476			58.28	Si
SLU 48	6.9	-27250	-111	-4153.38		45583	4.27	10833	6476			58.23	Si
SLU 72	5	-34543	-109	-1506.81		57784	4.27	10833	6476			59.65	Si

Comb.	Quota	N	V par	M	σ0	σN	l'	fvd	Vt scorr.	Vt fess.diag.	Vt,lim	c.s.	Verifica
SLU 72	6.9	-30326	-109	-4566.9		50729	4.27	10833	6476			59.57	Si
SLU 71	5	-34572	-109	-1500.4		57833	4.27	10833	6476			59.51	Si
SLU 71	6.9	-30352	-109	-4567.95		50772	4.27	10833	6476			59.44	Si
SLU 50	5	-30907	-111	-1087.58		51701	4.27	10833	6476			58.26	Si
SLU 50	6.9	-26722	-111	-4074.59		44700	4.27	10833	6476			58.22	Si
SLU 51	5	-30877	-111	-1093.99		51652	4.27	10833	6476			58.4	Si
SLU 51	6.9	-26696	-111	-4073.53		44657	4.27	10833	6476			58.34	Si
SLU 45	5	-30780	-106	-1188.59		51490	4.27	10833	6476			61.19	Si
SLU 45	6.9	-26657	-106	-4054.56		44591	4.27	10833	6476			61.14	Si
SLU 46	5	-30751	-106	-1195		51440	4.27	10833	6476			61.34	Si
SLU 46	6.9	-26631	-106	-4053.5		44548	4.27	10833	6476			61.28	Si
SLU 70	5	-35076	-109	-1575.22		58675	4.27	10833	6476			59.67	Si
SLU 70	6.9	-30854	-109	-4645.69		51613	4.27	10833	6476			59.58	Si
SLU 49	5	-31410	-111	-1162.4		52543	4.27	10833	6476			58.42	Si
SLU 49	6.9	-27224	-111	-4152.33		45541	4.27	10833	6476			58.36	Si

Verifica a taglio nel piano secondo D.M. 17-01-18 (N.T.C.) §7.8.2.2.2 con rottura per scorrimento in combinazioni sismiche, γM = 2

Comb.	Quota	N	V par	M	σ0	σN	l'	fvd	Vt scorr.	Vt fess.diag.	Vt,lim	c.s.	Verifica
SLV 1	5	-22648	11543	6167.01		37885	4.27	15910	9511			0.82	No, Vu<V
SLV 1	6.9	-23246	11002	-9091.76		38886	4.27	16110	9631			0.88	No, Vu<V
SLV 12	5	-26640	-3642	-1732.23		44564	4.27	16250	9714			2.67	Si
SLV 12	6.9	-23142	-3341	-10.21		38712	4.27	16076	9610			2.88	Si
SLV 4	5	-22560	11487	7335		37739	4.27	15881	9494			0.83	No, Vu<V
SLV 4	6.9	-23646	11037	-7993.5		39556	4.27	16245	9711			0.88	No, Vu<V
SLV 15	5	-28995	-11689	-8710.99		48503	4.27	16250	9714			0.83	No, Vu<V
SLV 15	6.9	-22151	-11148	2317.25		37055	4.27	15744	9412			0.84	No, Vu<V
SLV 16	5	-28995	-11689	-8710.99		48503	4.27	16250	9714			0.83	No, Vu<V
SLV 16	6.9	-22151	-11148	2317.25		37055	4.27	15744	9412			0.84	No, Vu<V
SLV 11	5	-26640	-3642	-1732.23		44564	4.27	16250	9714			2.67	Si
SLV 11	6.9	-23142	-3341	-10.21		38712	4.27	16076	9610			2.88	Si
SLV 3	5	-22560	11487	7335		37739	4.27	15881	9494			0.83	No, Vu<V
SLV 3	6.9	-23646	11037	-7993.5		39556	4.27	16245	9711			0.88	No, Vu<V
SLV 13	5	-29082	-11633	-9878.98		48649	4.27	16250	9714			0.84	No, Vu<V
SLV 13	6.9	-21750	-11184	1218.98		36384	4.27	15610	9332			0.83	No, Vu<V
SLV 2	5	-22648	11543	6167.01		37885	4.27	15910	9511			0.82	No, Vu<V
SLV 2	6.9	-23246	11002	-9091.76		38886	4.27	16110	9631			0.88	No, Vu<V
SLV 14	5	-29082	-11633	-9878.98		48649	4.27	16250	9714			0.84	No, Vu<V
SLV 14	6.9	-21750	-11184	1218.98		36384	4.27	15610	9332			0.83	No, Vu<V

Verifica a pressoflessione fuori piano D.M. 17-01-18 (N.T.C.)

quota 6.775 Wa 0.03 denominatore 8 γM = 2

Comb.	fd	Sa	σ0	N	M	Mc	Coeff.s.	Verifica
SLV 13	143750	0.39	36384	-21750	217.76	1069.16	4.91	Si
SLV 14	143750	0.39	36384	-21750	217.76	1069.16	4.91	Si
SLV 10	143750	0.39	36477	-21806	217.76	1070.73	4.92	Si
SLV 9	143750	0.39	36477	-21806	217.76	1070.73	4.92	Si
SLV 16	143750	0.39	37055	-22151	217.76	1080.35	4.96	Si
SLV 15	143750	0.39	37055	-22151	217.76	1080.35	4.96	Si
SLV 6	143750	0.39	37228	-22255	217.76	1083.19	4.97	Si
SLV 5	143750	0.39	37228	-22255	217.76	1083.19	4.97	Si
SLV 11	143750	0.39	38712	-23142	217.76	1106.71	5.08	Si
SLV 12	143750	0.39	38712	-23142	217.76	1106.71	5.08	Si

Verifica dei meccanismi locali di collasso con analisi cinematica lineare

forza di aggancio al piano = 0 quota mezzeria = 6.775 Wa = 0.03 Ta = 0.1503

Comb.	N top	N base	V orto	α0	M*	e*	a0*	aLim	Verifica
SLV 5	-17190	-25002	304	0.006	2049.4	0.957	0.08783	16.55957	No
SLV 6	-17190	-25002	304	0.006	2049.4	0.957	0.08783	16.55957	No
SLV 10	-17510	-26933	294	0.007	2082	0.958	0.09926	16.55957	No
SLV 9	-17510	-26933	294	0.007	2082	0.958	0.09926	16.55957	No
SLV 12	-20508	-26640	-304	0.008	2386.9	0.962	0.11846	16.55957	No
SLV 11	-20508	-26640	-304	0.008	2386.9	0.962	0.11846	16.55957	No
SLV 7	-20188	-24710	-294	0.008	2354.3	0.962	0.12291	16.55957	No
SLV 8	-20188	-24710	-294	0.008	2354.3	0.962	0.12291	16.55957	No
SLV 2	-17865	-22648	107	0.016	2118.1	0.958	0.24616	16.59692	No
SLV 1	-17865	-22648	107	0.016	2118.1	0.958	0.24616	16.59692	No

Tabella dei coefficienti di sicurezza minimi

Stato limite	Coeff.s.	Comb.	Verifica
PF_SLU	4.078	SLU 83	Si
V_SLU	58.216	SLU 50	Si
PF_SLV	3.721	SLV 1	Si
V_SLV	0.824	SLV 1	No
PFFP_SLV	4.91	SLV 13	Si
R_SLV	0.005	SLV 5	No

Maschio 135

Verifiche condotte secondo D.M. 17-01-18 (N.T.C.)

Dati geometrici

X ini.	Y ini.	X fin.	Y fin.	Quota i.	Quota.s	l	Sp.	h netta	h ini.	h fin.	a	a.s.,sx	a.s.,dx
-9.72	3.3	-9.94	3.3	L4	L5	0.22	0.14	3.55	3.55	3.55			

Caratteristiche del materiale

(Circolare 7 21-01-19 C8.5.I) Muratura in mattoni pieni e malta di calce LC2_Corti

fb	fk	fvk0	fmedio	τ0	fv0	μ	ϕ	fv,lim	E	G	FC
600000			345000	9000	20000	0.58	0.77	32500	320000000	128000000	1.2

Verifica a pressoflessione nel piano secondo D.M. 17-01-18 NTC §7.8.2.2.1 in combinazioni non sismiche, γM = 3

Comb.	Quota	N	M	σ0	Mu	c.s.	Verifica
SLU 57	5	-2686	42.64	87192	0	0	No, Rottura per schiacciamento
SLU 57	6.9	-1460	-20.92	47401	67.14	3.209	Si
SLU 83	5	-2890	38.28	93825	0	0	No, Rottura per schiacciamento
SLU 83	6.9	-1770	-14.22	57461	57.35	4.034	Si
SLU 55	5	-2580	40.31	83781	0	0	No, Rottura per schiacciamento
SLU 55	6.9	-1415	-19.42	45928	67.87	3.495	Si
SLU 53	5	-2615	40.59	84913	0	0	No, Rottura per schiacciamento
SLU 53	6.9	-1445	-19.29	46914	67.4	3.495	Si
SLU 60	5	-2592	36.72	84144	0	0	No, Rottura per schiacciamento
SLU 60	6.9	-1519	-15.29	49308	65.93	4.311	Si
SLU 58	5	-2658	42.61	86291	0	0	No, Rottura per schiacciamento
SLU 58	6.9	-1430	-21.26	46429	67.64	3.182	Si
SLU 54	5	-2613	40.5	84826	0	0	No, Rottura per schiacciamento
SLU 54	6.9	-1445	-19.21	46909	67.41	3.508	Si
SLU 59	5	-2655	42.52	86204	0	0	No, Rottura per schiacciamento
SLU 59	6.9	-1430	-21.18	46424	67.65	3.194	Si
SLU 84	5	-2887	38.19	93739	0	0	No, Rottura per schiacciamento
SLU 84	6.9	-1770	-14.14	57456	57.36	4.055	Si
SLU 56	5	-2688	42.74	87278	0	0	No, Rottura per schiacciamento
SLU 56	6.9	-1460	-21	47406	67.14	3.197	Si

Verifica a pressoflessione nel piano secondo D.M. 17-01-18 NTC §7.8.2.2.1 in combinazioni sismiche, γM = 2

Comb.	Quota	N	M	σ0	Mu	c.s.	Verifica
SLV 4	5	-3284	145.11	106623	46.02	0.317	No, M>Mu
SLV 4	6.9	339	-101.49	0	0	0	No, Trazione
SLV 13	5	-649	-83.17	0	0	0	No, e>l/2
SLV 13	6.9	-2484	71.4	80635	92.9	1.301	Si
SLV 3	5	-3284	145.11	106623	46.02	0.317	No, M>Mu
SLV 3	6.9	339	-101.49	0	0	0	No, Trazione
SLV 2	5	-3325	164.77	107958	42.6	0.259	No, M>Mu
SLV 2	6.9	456	-108.1	0	0	0	No, Trazione
SLV 1	5	-3325	164.77	107958	42.6	0.259	No, M>Mu
SLV 1	6.9	456	-108.1	0	0	0	No, Trazione
SLV 16	5	-608	-102.84	0	0	0	No, e>l/2
SLV 16	6.9	-2600	78.01	84409	88.42	1.133	Si
SLV 5	5	-2436	100.94	79103	94.5	0.936	No, M>Mu
SLV 5	6.9	-437	-52.98	0	0	0	No, e>l/2
SLV 15	5	-608	-102.84	0	0	0	No, e>l/2
SLV 15	6.9	-2600	78.01	84409	88.42	1.133	Si
SLV 6	5	-2436	100.94	79103	94.5	0.936	No, M>Mu
SLV 6	6.9	-437	-52.98	0	0	0	No, e>l/2
SLV 14	5	-649	-83.17	0	0	0	No, e>l/2
SLV 14	6.9	-2484	71.4	80635	92.9	1.301	Si

Verifica a taglio nel piano secondo D.M. 17-01-18 (N.T.C.) §7.8.2.2.2 con rottura per scorrimento in combinazioni non sismiche, γM = 3

Comb.	Quota	N	V par	M	σ0	σN	l'	fvd	Vt scorr.	Vt fess.diag.	Vt,lim	c.s.	Verifica
SLU 48	5	-2502	109	46.48		81248	0.22	10833	334			3.07	Si
SLU 48	6.9	-1182	106	-26.92		38390	0.22	10674	329			3.09	Si
SLU 51	5	-2469	108	46.26		80173	0.22	10833	334			3.08	Si
SLU 51	6.9	-1152	106	-27.1		37408	0.22	10543	325			3.06	Si
SLU 71	5	-2697	106	45.78		87576	0.22	10833	334			3.14	Si
SLU 71	6.9	-1388	104	-24.39		45073	0.22	10833	334			3.21	Si
SLU 45	5	-2430	103	44.34		78883	0.22	10833	334			3.24	Si
SLU 45	6.9	-1167	101	-25.21		37897	0.22	10609	327			3.24	Si
SLU 69	5	-2728	106	45.9		88564	0.22	10833	334			3.14	Si
SLU 69	6.9	-1418	104	-24.13		46050	0.22	10833	334			3.21	Si
SLU 72	5	-2695	106	45.68		87489	0.22	10833	334			3.15	Si
SLU 72	6.9	-1388	104	-24.31		45068	0.22	10833	334			3.22	Si
SLU 50	5	-2472	109	46.36		80260	0.22	10833	334			3.07	Si
SLU 50	6.9	-1152	106	-27.17		37413	0.22	10544	325			3.05	Si
SLU 70	5	-2725	106	45.81		88477	0.22	10833	334			3.15	Si
SLU 70	6.9	-1418	104	-24.05		46045	0.22	10833	334			3.22	Si
SLU 49	5	-2500	108	46.39		81161	0.22	10833	334			3.08	Si
SLU 49	6.9	-1182	106	-26.84		38385	0.22	10674	329			3.1	Si
SLU 47	5	-2395	103	44.05		77750	0.22	10833	334			3.25	Si
SLU 47	6.9	-1137	101	-25.34		36912	0.22	10477	323			3.21	Si

Verifica a taglio nel piano secondo D.M. 17-01-18 (N.T.C.) §7.8.2.2.2 con rottura per scorrimento in combinazioni sismiche, γM = 2

Comb.	Quota	N	V par	M	σ0	σN	l'	fvd	Vt scorr.	Vt fess.diag.	Vt,lim	c.s.	Verifica
SLV 3	5	-3284	413	145.11		118805	0.1974	16250	449			1.09	Si
SLV 3	6.9	339	279	-101.49		0	0	8333	0			0	No, Vu<V
SLV 6	5	-2436	242	100.94		84599	0.2057	16250	468			1.93	Si
SLV 6	6.9	-437	179	-52.98		0	0	8333	0			0	No, Vu<V
SLV 1	5	-3325	451	164.77		130977	0.1813	16250	413			0.91	No, Vu<V
SLV 1	6.9	456	305	-108.1		0	0	8333	0			0	No, Vu<V
SLV 4	5	-3284	413	145.11		118805	0.1974	16250	449			1.09	Si

Comb.	Quota	N	V par	M	σ0	σN	l'	fvd	Vt scorr.	Vt fess.diag.	Vt,lim	c.s.	Verifica
SLV 4	6.9	339	279	-101.49		0	0	8333	0			0	No, Vu<V
SLV 5	5	-2436	242	100.94		84599	0.2057	16250	468			1.93	Si
SLV 5	6.9	-437	179	-52.98		0	0	8333	0			0	No, Vu<V
SLV 13	5	-649	-271	-83.17		0	0	8333	0			0	No, Vu<V
SLV 13	6.9	-2484	-141	71.4		80635	0.22	16250	500			3.55	Si
SLV 2	5	-3325	451	164.77		130977	0.1813	16250	413			0.91	No, Vu<V
SLV 2	6.9	456	305	-108.1		0	0	8333	0			0	No, Vu<V
SLV 16	5	-608	-309	-102.84		0	0	8333	0			0	No, Vu<V
SLV 16	6.9	-2600	-166	78.01		84409	0.22	16250	500			3.01	Si
SLV 14	5	-649	-271	-83.17		0	0	8333	0			0	No, Vu<V
SLV 14	6.9	-2484	-141	71.4		80635	0.22	16250	500			3.55	Si
SLV 15	5	-608	-309	-102.84		0	0	8333	0			0	No, Vu<V
SLV 15	6.9	-2600	-166	78.01		84409	0.22	16250	500			3.01	Si

Verifica a pressoflessione fuori piano D.M. 17-01-18 (N.T.C.)

quota 6.775 Wa 0.03 denominatore 8 γM = 2

Comb.	fd	Sa	σ0	N	M	Mc	Coeff.s.	Verifica
SLV 3	143750	0.39	0	339	11.22	0	0	No, Trazione
SLV 2	143750	0.39	0	456	11.22	0	0	No, Trazione
SLV 1	143750	0.39	0	456	11.22	0	0	No, Trazione
SLV 4	143750	0.39	0	339	11.22	0	0	No, Trazione
SLV 6	143750	0.39	14201	-437	11.22	27.06	2.41	Si
SLV 5	143750	0.39	14201	-437	11.22	27.06	2.41	Si
SLV 7	143750	0.39	26782	-825	11.22	45.09	4.02	Si
SLV 8	143750	0.39	26782	-825	11.22	45.09	4.02	Si
SLV 16	143750	0.39	84409	-2600	11.22	56.27	5.02	Si
SLV 15	143750	0.39	84409	-2600	11.22	56.27	5.02	Si

Verifica dei meccanismi locali di collasso con analisi cinematica lineare

forza di aggancio al piano = 0 quota mezzeria = 6.775 Wa = 0.03 Ta = 0.1503

Comb.	N top	N base	V orto	α0	M*	e*	a0*	aLim	Verifica
SLV 13	-187	-649	-6	0.006	35.2	0.899	0.09054	16.59692	No
SLV 14	-187	-649	-6	0.006	35.2	0.899	0.09054	16.59692	No
SLV 9	-410	-1633	-7	0.01	57.3	0.928	0.15651	16.55957	No
SLV 10	-410	-1633	-7	0.01	57.3	0.928	0.15651	16.55957	No
SLV 8	-1091	-2299	7	0.016	126.4	0.963	0.23482	16.55957	No
SLV 7	-1091	-2299	7	0.016	126.4	0.963	0.23482	16.55957	No
SLV 3	-1313	-3284	6	0.017	149.1	0.969	0.25304	16.59692	No
SLV 4	-1313	-3284	6	0.017	149.1	0.969	0.25304	16.59692	No
SLV 5	-713	-2436	-4	0.017	88.1	0.949	0.25722	16.55957	No
SLV 6	-713	-2436	-4	0.017	88.1	0.949	0.25722	16.55957	No

Tabella dei coefficienti di sicurezza minimi

Stato limite	Coeff.s.	Comb.	Verifica
PF_SLU	0	SLU 53	No
V_SLU	3.052	SLU 50	Si
PF_SLV	0	SLV 4	No
V_SLV	0	SLV 1	No
PFFP_SLV	0	SLV 4	No
R_SLV	0.005	SLV 13	No

Maschio 136

Verifiche condotte secondo D.M. 17-01-18 (N.T.C.)

Dati geometrici

X ini.	Y ini.	X fin.	Y fin.	Quota i.	Quota.s	l	Sp.	h netta	h ini.	h fin.	a	a.s.,sx	a.s.,dx
-11.003	-4.697	-11.003	-3.309	L4	Z medio 676 cm	1.388	0.28	1.76	1.76	1.76			

Caratteristiche del materiale

(Circolare 7 21-01-19 C8.5.I) Muratura in mattoni pieni e malta di calce LC2_Corti

fb	fk	fvk0	fmedio	τ0	fv0	μ	ϕ	fv,lim	E	G	FC
600000			345000	9000	20000	0.58	0.77	32500	320000000	128000000	1.2

Verifica a pressoflessione nel piano secondo D.M. 17-01-18 NTC §7.8.2.2.1 in combinazioni non sismiche, γM = 3

Comb.	Quota	N	M	σ0	Mu	c.s.	Verifica
SLU 40	5	-13655	331.87	35144	5386.87	16.232	Si
SLU 40	6.76	-11360	493.93	29238	5053.08	10.23	Si
SLU 42	5	-13848	348.71	35641	5404.42	15.498	Si
SLU 42	6.76	-11566	486.4	29768	5092.46	10.47	Si
SLU 82	5	-16473	362.85	42396	5480.9	15.105	Si
SLU 82	6.76	-13652	530.95	35135	5386.52	10.145	Si
SLU 81	5	-16555	327.17	42607	5478.43	16.745	Si
SLU 81	6.76	-13694	551.37	35245	5390.57	9.777	Si
SLU 41	5	-13930	313.03	35852	5411.38	17.287	Si
SLU 41	6.76	-11609	506.83	29878	5100.44	10.063	Si
SLU 18	5	-12615	239.22	32467	5264.16	22.006	Si
SLU 18	6.76	-10459	442.99	26919	4858.92	10.968	Si
SLU 60	5	-15433	270.2	39719	5486.72	20.306	Si
SLU 60	6.76	-12751	480.01	32816	5282.86	11.006	Si
SLU 83	5	-16748	344.01	43104	5471.43	15.905	Si
SLU 83	6.76	-13900	543.84	35775	5408.87	9.946	Si
SLU 84	5	-16666	379.69	42893	5474.6	14.419	Si
SLU 84	6.76	-13857	523.42	35665	5405.21	10.327	Si
SLU 39	5	-13737	296.19	35355	5394.52	18.213	Si

Comb.	Quota	N	M	σ0	Mu	c.s.	Verifica
SLU 39	6.76	-11403	514.36	29348	5061.44	9.84	Si

Verifica a pressoflessione nel piano secondo D.M. 17-01-18 NTC §7.8.2.2.1 in combinazioni sismiche, γM = 2

Comb.	Quota	N	M	σ0	Mu	c.s.	Verifica
SLV 16	5	-10534	659.49	27110	5687.06	8.623	Si
SLV 16	6.76	-8961	-228.34	23062	5043.78	22.089	Si
SLV 12	5	-5847	1176.99	15048	3557.2	3.022	Si
SLV 12	6.76	-5382	-133.46	13852	3310.98	24.809	Si
SLV 7	5	-5312	1066.73	13672	3273.49	3.069	Si
SLV 7	6.76	-4847	116.67	12474	3019.55	25.882	Si
SLV 11	5	-5847	1176.99	15048	3557.2	3.022	Si
SLV 11	6.76	-5382	-133.46	13852	3310.98	24.809	Si
SLV 1	5	-12235	-261.84	31488	6301.24	24.066	Si
SLV 1	6.76	-9708	774.21	24985	5358.38	6.921	Si
SLV 15	5	-10534	659.49	27110	5687.06	8.623	Si
SLV 15	6.76	-8961	-228.34	23062	5043.78	22.089	Si
SLV 2	5	-12235	-261.84	31488	6301.24	24.066	Si
SLV 2	6.76	-9708	774.21	24985	5358.38	6.921	Si
SLV 4	5	-8752	291.98	22524	4952.99	16.963	Si
SLV 4	6.76	-7176	605.41	18469	4226.41	6.981	Si
SLV 3	5	-8752	291.98	22524	4952.99	16.963	Si
SLV 3	6.76	-7176	605.41	18469	4226.41	6.981	Si
SLV 8	5	-5312	1066.73	13672	3273.49	3.069	Si
SLV 8	6.76	-4847	116.67	12474	3019.55	25.882	Si

Verifica a taglio nel piano secondo D.M. 17-01-18 (N.T.C.) §7.8.2.2.2 con rottura per scorrimento in combinazioni non sismiche, γM = 3

Comb.	Quota	N	V par	M	σ0	σN	I'	fvd	Vt scorr.	Vt fess.diag.	Vt,lim	c.s.	Verifica
SLU 39	5	-13737	-408	296.19		35355	1.3877	10270	3990			9.79	Si
SLU 39	6.76	-11403	-489	514.36		29348	1.3877	9469	3679			7.53	Si
SLU 81	5	-16555	-465	327.17		42607	1.3877	10833	4209			9.06	Si
SLU 81	6.76	-13694	-529	551.37		35245	1.3877	10255	3985			7.53	Si
SLU 41	5	-13930	-343	313.03		35852	1.3877	10336	4016			11.7	Si
SLU 41	6.76	-11609	-409	506.83		29878	1.3877	9539	3707			9.07	Si
SLU 18	5	-12615	-374	239.22		32467	1.3877	9884	3841			10.26	Si
SLU 18	6.76	-10459	-440	442.99		26919	1.3877	9145	3553			8.08	Si
SLU 62	5	-15626	-367	287.03		40216	1.3877	10833	4209			11.47	Si
SLU 62	6.76	-12957	-400	472.48		33346	1.3877	10002	3886			9.71	Si
SLU 40	5	-13655	-268	331.87		35144	1.3877	10241	3979			14.83	Si
SLU 40	6.76	-11360	-376	493.93		29238	1.3877	9454	3673			9.76	Si
SLU 60	5	-15433	-431	270.2		39719	1.3877	10833	4209			9.76	Si
SLU 60	6.76	-12751	-480	480.01		32816	1.3877	9931	3859			8.04	Si
SLU 83	5	-16748	-400	344.01		43104	1.3877	10833	4209			10.51	Si
SLU 83	6.76	-13900	-449	543.84		35775	1.3877	10326	4012			8.93	Si
SLU 82	5	-16473	-325	362.85		42396	1.3877	10833	4209			12.94	Si
SLU 82	6.76	-13652	-417	530.95		35135	1.3877	10240	3979			9.54	Si
SLU 20	5	-12808	-310	256.05		32964	1.3877	9951	3866			12.48	Si
SLU 20	6.76	-10665	-360	435.46		27449	1.3877	9215	3581			9.95	Si

Verifica a taglio nel piano secondo D.M. 17-01-18 (N.T.C.) §7.8.2.2.2 con rottura per scorrimento in combinazioni sismiche, γM = 2

Comb.	Quota	N	V par	M	σ0	σN	I'	fvd	Vt scorr.	Vt fess.diag.	Vt,lim	c.s.	Verifica
SLV 11	5	-5847	4727	1176.99		15048	1.3877	11343	4407			0.93	No, Vu<V
SLV 11	6.76	-5382	4497	-133.46		13852	1.3877	11104	4314			0.96	No, Vu<V
SLV 5	5	-16921	-5262	-779.33		43550	1.3877	16250	6314			1.2	Si
SLV 5	6.76	-13286	-5006	679.33		34195	1.3877	15172	5895			1.18	Si
SLV 1	5	-12235	-4488	-261.84		31488	1.3877	14631	5685			1.27	Si
SLV 1	6.76	-9708	-4535	774.21		24985	1.3877	13330	5179			1.14	Si
SLV 6	5	-16921	-5262	-779.33		43550	1.3877	16250	6314			1.2	Si
SLV 6	6.76	-13286	-5006	679.33		34195	1.3877	15172	5895			1.18	Si
SLV 15	5	-10534	3954	659.49		27110	1.3877	13755	5345			1.35	Si
SLV 15	6.76	-8961	4026	-228.34		23062	1.3877	12946	5030			1.25	Si
SLV 12	5	-5847	4727	1176.99		15048	1.3877	11343	4407			0.93	No, Vu<V
SLV 12	6.76	-5382	4497	-133.46		13852	1.3877	11104	4314			0.96	No, Vu<V
SLV 2	5	-12235	-4488	-261.84		31488	1.3877	14631	5685			1.27	Si
SLV 2	6.76	-9708	-4535	774.21		24985	1.3877	13330	5179			1.14	Si
SLV 7	5	-5312	2932	1066.73		13672	1.3877	11068	4300			1.47	Si
SLV 7	6.76	-4847	2615	116.67		12474	1.3877	10828	4207			1.61	Si
SLV 8	5	-5312	2932	1066.73		13672	1.3877	11068	4300			1.47	Si
SLV 8	6.76	-4847	2615	116.67		12474	1.3877	10828	4207			1.61	Si
SLV 16	5	-10534	3954	659.49		27110	1.3877	13755	5345			1.35	Si
SLV 16	6.76	-8961	4026	-228.34		23062	1.3877	12946	5030			1.25	Si

Verifica a pressoflessione fuori piano D.M. 17-01-18 (N.T.C.)

quota 5.88 Wa 0.05 denominatore 8 γM = 2

Comb.	fd	Sa	σ0	N	M	Mc	Coeff.s.	Verifica
SLV 7	143750	0.37	13945	-5418	34.68	672	19.38	Si
SLV 8	143750	0.37	13945	-5418	34.68	672	19.38	Si
SLV 11	143750	0.37	14869	-5777	34.68	710.38	20.48	Si
SLV 12	143750	0.37	14869	-5777	34.68	710.38	20.48	Si
SLV 3	143750	0.37	21571	-8382	34.68	966.26	27.86	Si
SLV 4	143750	0.37	21571	-8382	34.68	966.26	27.86	Si
SLV 16	143750	0.37	24649	-9578	34.68	1070.36	30.86	Si
SLV 15	143750	0.37	24649	-9578	34.68	1070.36	30.86	Si
SLV 2	143750	0.37	29031	-11280	34.68	1204	34.71	Si
SLV 1	143750	0.37	29031	-11280	34.68	1204	34.71	Si

Verifica dei meccanismi locali di collasso con analisi cinematica lineare

forza di aggancio al piano = 0 quota mezzeria = 5.88 Wa = 0.05 Ta = 0.0185

Comb.	N top	N base	V orto	α0	M*	e*	a0*	aLim	Verifica
SLV 7	-4847	-5312	356	0.023	590	0.952	0.35645	3.90153	No

Comb.	N top	N base	V orto	α0	M*	e*	a0*	aLim	Verifica
SLV 8	-4847	-5312	356	0.023	590	0.952	0.35645	3.90153	No
SLV 12	-5382	-5847	285	0.04	644.4	0.956	0.61066	3.90153	No
SLV 11	-5382	-5847	285	0.04	644.4	0.956	0.61066	3.90153	No
SLV 9	-13822	-17456	-387	0.056	1503.7	0.98	0.83274	3.90153	No
SLV 10	-13822	-17456	-387	0.056	1503.7	0.98	0.83274	3.90153	No
SLV 4	-7176	-8752	203	0.06	826.9	0.965	0.89984	4.00848	No
SLV 3	-7176	-8752	203	0.06	826.9	0.965	0.89984	4.00848	No
SLV 6	-13286	-16921	-316	0.06	1449.2	0.979	0.8955	3.90153	No
SLV 5	-13286	-16921	-316	0.06	1449.2	0.979	0.8955	3.90153	No

Tabella dei coefficienti di sicurezza minimi

Stato limite	Coeff.s.	Comb.	Verifica
PF_SLU	9.777	SLU 81	Si
V_SLU	7.53	SLU 39	Si
PF_SLV	3.022	SLV 11	Si
V_SLV	0.932	SLV 11	No
PFFP_SLV	19.376	SLV 7	Si
R_SLV	0.091	SLV 7	No

Maschio 137

Verifiche condotte secondo D.M. 17-01-18 (N.T.C.)

Dati geometrici

X ini.	Y ini.	X fin.	Y fin.	Quota i.	Quota.s	l	Sp.	h netta	h ini.	h fin.	a	a.s.,sx	a.s.,dx
-11.003	-4.697	-11.003	-3.309	Z medio 676 cm	L5	1.388	0.28	1.79	1.79	1.79			

Caratteristiche del materiale

(Circolare 7 21-01-19 C8.5.I) Muratura in mattoni pieni e malta di calce LC2_Corti

fb	fk	fvk0	fmedio	τ0	fv0	μ	ϕ	fv,lim	E	G	FC
600000			345000	9000	20000	0.58	0.77	32500	320000000	128000000	1.2

Verifica a pressoflessione nel piano secondo D.M. 17-01-18 NTC §7.8.2.2.1 in combinazioni non sismiche, γM = 3

Comb.	Quota	N	M	σ0	Mu	c.s.	Verifica
SLU 81	6.76	-12559	-154.68	32322	5256.18	33.98	Si
SLU 81	8.55	-10664	250.41	27445	4906.11	19.592	Si
SLU 82	6.76	-12521	-138.38	32224	5250.69	37.943	Si
SLU 82	8.55	-10657	227.92	27428	4904.58	21.519	Si
SLU 60	6.76	-11743	-155.11	30222	5124.73	33.039	Si
SLU 60	8.55	-9919	211.68	25528	4725.39	22.323	Si
SLU 83	6.76	-12769	-134.44	32864	5285.39	39.315	Si
SLU 83	8.55	-10885	228.9	28015	4955.09	21.647	Si
SLU 18	6.76	-9521	-148.99	24504	4618.82	31	Si
SLU 18	8.55	-8089	190.17	20819	4178.2	21.971	Si
SLU 74	6.76	-12485	-91.53	32131	5245.46	57.311	Si
SLU 74	8.55	-10613	219.85	27313	4894.43	22.263	Si
SLU 40	6.76	-10299	-132.26	26506	4820.56	36.447	Si
SLU 40	8.55	-8827	206.4	22719	4416.59	21.398	Si
SLU 41	6.76	-10548	-128.32	27146	4879.49	38.027	Si
SLU 41	8.55	-9055	207.39	23306	4485.39	21.628	Si
SLU 32	6.76	-10263	-85.41	26413	4811.83	56.341	Si
SLU 32	8.55	-8783	198.34	22604	4402.87	22.199	Si
SLU 39	6.76	-10337	-148.56	26604	4829.76	32.51	Si
SLU 39	8.55	-8834	228.9	22736	4418.67	19.304	Si

Verifica a pressoflessione nel piano secondo D.M. 17-01-18 NTC §7.8.2.2.1 in combinazioni sismiche, γM = 2

Comb.	Quota	N	M	σ0	Mu	c.s.	Verifica
SLV 4	6.76	-6524	-401.69	16791	3904.58	9.72	Si
SLV 4	8.55	-6045	676.8	15559	3660.47	5.408	Si
SLV 5	6.76	-12472	-1144.16	32098	6380.2	5.576	Si
SLV 5	8.55	-10110	628.22	26019	5520.78	8.788	Si
SLV 7	6.76	-4492	675.53	11561	2821.92	4.177	Si
SLV 7	8.55	-4381	30.31	11274	2758.94	91.028	Si
SLV 1	6.76	-8918	-947.59	22952	5025.31	5.303	Si
SLV 1	8.55	-7764	856.18	19983	4506.11	5.263	Si
SLV 11	6.76	-5144	1052.95	13240	3182.65	3.023	Si
SLV 11	8.55	-4672	-344.46	12025	2922.7	8.485	Si
SLV 2	6.76	-8918	-947.59	22952	5025.31	5.303	Si
SLV 2	8.55	-7764	856.18	19983	4506.11	5.263	Si
SLV 12	6.76	-5144	1052.95	13240	3182.65	3.023	Si
SLV 12	8.55	-4672	-344.46	12025	2922.7	8.485	Si
SLV 3	6.76	-6524	-401.69	16791	3904.58	9.72	Si
SLV 3	8.55	-6045	676.8	15559	3660.47	5.408	Si
SLV 6	6.76	-12472	-1144.16	32098	6380.2	5.576	Si
SLV 6	8.55	-10110	628.22	26019	5520.78	8.788	Si
SLV 8	6.76	-4492	675.53	11561	2821.92	4.177	Si
SLV 8	8.55	-4381	30.31	11274	2758.94	91.028	Si

Verifica a taglio nel piano secondo D.M. 17-01-18 (N.T.C.) §7.8.2.2.2 con rottura per scorrimento in combinazioni non sismiche, γM = 3

Comb.	Quota	N	V par	M	σ0	σN	l'	fvd	Vt scorr.	Vt fess.diag.	Vt,lim	c.s.	Verifica
SLU 83	6.76	-12769	-356	-134.44		32864	1.3877	9937	3861			10.85	Si
SLU 83	8.55	-10885	12	228.9		28015	1.3877	9291	3610			291.28	Si
SLU 60	6.76	-11743	-400	-155.11		30222	1.3877	9585	3724			9.32	Si
SLU 60	8.55	-9919	-81	211.68		25528	1.3877	8959	3481			43.13	Si
SLU 51	6.76	-10944	111	30.76		28165	1.3877	9311	3618			32.45	Si

Comb.	Quota	N	V par	M	σ0	σN	I'	fvd	Vt scorr.	Vt fess.diag.	Vt,lim	c.s.	Verifica
SLU 51	8.55	-9216	329	71.98		23718	1.3877	8718	3387			10.29	Si
SLU 39	6.76	-10337	-413	-148.56		26604	1.3877	9103	3537			8.57	Si
SLU 39	8.55	-8834	-102	228.9		22736	1.3877	8587	3337			32.65	Si
SLU 9	6.76	-8722	138	36.88		22447	1.3877	8549	3322			24.04	Si
SLU 9	8.55	-7386	318	50.47		19009	1.3877	8090	3143			9.89	Si
SLU 41	6.76	-10548	-329	-128.32		27146	1.3877	9175	3565			10.83	Si
SLU 41	8.55	-9055	1	207.39		23306	1.3877	8663	3366			1000	Si
SLU 30	6.76	-9538	98	37.31		24547	1.3877	8829	3430			34.94	Si
SLU 30	8.55	-8131	308	89.2		20926	1.3877	8346	3243			10.54	Si
SLU 18	6.76	-9521	-373	-148.99		24504	1.3877	8823	3428			9.19	Si
SLU 18	8.55	-8089	-92	190.17		20819	1.3877	8331	3237			35.11	Si
SLU 7	6.76	-8792	124	41.07		22627	1.3877	8573	3331			26.85	Si
SLU 7	8.55	-7455	298	63.67		19187	1.3877	8114	3153			10.6	Si
SLU 81	6.76	-12559	-440	-154.68		32322	1.3877	9865	3833			8.72	Si
SLU 81	8.55	-10664	-91	250.41		27445	1.3877	9215	3580			39.48	Si

Verifica a taglio nel piano secondo D.M. 17-01-18 (N.T.C.) §7.8.2.2.2 con rottura per scorrimento in combinazioni sismiche, γM = 2

Comb.	Quota	N	V par	M	σ0	σN	I'	fvd	Vt scorr.	Vt fess.diag.	Vt,lim	c.s.	Verifica
SLV 8	6.76	-4492	2529	675.53		11561	1.3877	10646	4136			1.64	Si
SLV 8	8.55	-4381	2266	30.31		11274	1.3877	10588	4114			1.82	Si
SLV 1	6.76	-8918	-4316	-947.59		22952	1.3877	12924	5021			1.16	Si
SLV 1	8.55	-7764	-3875	856.18		19983	1.3877	12330	4791			1.24	Si
SLV 15	6.76	-8698	3928	856.39		22387	1.3877	12811	4978			1.27	Si
SLV 15	8.55	-7018	3876	-572.41		18061	1.3877	11946	4641			1.2	Si
SLV 12	6.76	-5144	4349	1052.95		13240	1.3877	10981	4267			0.98	No, Vu<V
SLV 12	8.55	-4672	4025	-344.46		12025	1.3877	10738	4172			1.04	Si
SLV 11	6.76	-5144	4349	1052.95		13240	1.3877	10981	4267			0.98	No, Vu<V
SLV 11	8.55	-4672	4025	-344.46		12025	1.3877	10738	4172			1.04	Si
SLV 16	6.76	-8698	3928	856.39		22387	1.3877	12811	4978			1.27	Si
SLV 16	8.55	-7018	3876	-572.41		18061	1.3877	11946	4641			1.2	Si
SLV 7	6.76	-4492	2529	675.53		11561	1.3877	10646	4136			1.64	Si
SLV 7	8.55	-4381	2266	30.31		11274	1.3877	10588	4114			1.82	Si
SLV 2	6.76	-8918	-4316	-947.59		22952	1.3877	12924	5021			1.16	Si
SLV 2	8.55	-7764	-3875	856.18		19983	1.3877	12330	4791			1.24	Si
SLV 6	6.76	-12472	-4736	-1144.16		32098	1.3877	14753	5732			1.21	Si
SLV 6	8.55	-10110	-4025	628.22		26019	1.3877	13537	5260			1.31	Si
SLV 5	6.76	-12472	-4736	-1144.16		32098	1.3877	14753	5732			1.21	Si
SLV 5	8.55	-10110	-4025	628.22		26019	1.3877	13537	5260			1.31	Si

Verifica a pressoflessione fuori piano D.M. 17-01-18 (N.T.C.)

quota 7.655 Wa 0.05 denominatore 8 γM = 2

Comb.	fd	Sa	σ0	N	M	Mc	Coeff.s.	Verifica
SLV 8	143750	0.4	11841	-4601	39.49	581.69	14.73	Si
SLV 7	143750	0.4	11841	-4601	39.49	581.69	14.73	Si
SLV 11	143750	0.4	13587	-5279	39.49	656.89	16.63	Si
SLV 12	143750	0.4	13587	-5279	39.49	656.89	16.63	Si
SLV 4	143750	0.4	15667	-6087	39.49	742.95	18.81	Si
SLV 3	143750	0.4	15667	-6087	39.49	742.95	18.81	Si
SLV 1	143750	0.4	20692	-8040	39.49	934.97	23.68	Si
SLV 2	143750	0.4	20692	-8040	39.49	934.97	23.68	Si
SLV 15	143750	0.4	21486	-8348	39.49	963.25	24.39	Si
SLV 16	143750	0.4	21486	-8348	39.49	963.25	24.39	Si

Verifica dei meccanismi locali di collasso con analisi cinematica lineare

forza di aggancio al piano = 0 quota mezzeria = 7.655 Wa = 0.05 Ta = 0.0191

Comb.	N top	N base	V orto	α0	M*	e*	a0*	aLim	Verifica
SLV 14	-8736	-11092	8	0.083	987.4	0.97	1.23736	4.34656	No
SLV 13	-8736	-11092	8	0.083	987.4	0.97	1.23736	4.34656	No
SLV 2	-7764	-8918	-5	0.083	888.4	0.967	1.25413	4.34656	No
SLV 1	-7764	-8918	-5	0.083	888.4	0.967	1.25413	4.34656	No
SLV 10	-10401	-13124	6	0.082	1156.9	0.974	1.22504	4.22636	No
SLV 9	-10401	-13124	6	0.082	1156.9	0.974	1.22504	4.22636	No
SLV 16	-7018	-8698	6	0.084	812.4	0.964	1.26431	4.34656	No
SLV 15	-7018	-8698	6	0.084	812.4	0.964	1.26431	4.34656	No
SLV 6	-10110	-12472	2	0.083	1127.2	0.973	1.23307	4.22636	No
SLV 5	-10110	-12472	2	0.083	1127.2	0.973	1.23307	4.22636	No

Tabella dei coefficienti di sicurezza minimi

Stato limite	Coeff.s.	Comb.	Verifica
PF_SLU	19.304	SLU 39	Si
V_SLU	8.565	SLU 39	Si
PF_SLV	3.023	SLV 11	Si
V_SLV	0.981	SLV 11	No
PFFP_SLV	14.73	SLV 7	Si
R_SLV	0.285	SLV 13	No

Maschio 138

Verifiche condotte secondo D.M. 17-01-18 (N.T.C.)

Dati geometrici

X ini.	Y ini.	X fin.	Y fin.	Quota i.	Quota.s	l	Sp.	h netta	h ini.	h fin.	a	a.s.,sx	a.s.,dx
-11.003	-3.309	-11.003	-0.354	L4	Z medio 766 cm	2.955	0.28	2.655	1.76	3.55			

Caratteristiche del materiale

(Circolare 7 21-01-19 C8.5.I) Muratura in mattoni pieni e malta di calce LC2_Corti

fb	fk	fvk0	fmedio	τ0	fv0	μ	ϕ	fv,lim	E	G	FC
600000			345000	9000	20000	0.58	0.77	32500	320000000	128000000	1.2

Verifica a pressoflessione nel piano secondo D.M. 17-01-18 NTC §7.8.2.2.1 in combinazioni non sismiche, γM = 3

Comb.	Quota	N	M	σ0	Mu	c.s.	Verifica
SLU 79	5	-47977	3300.25	57984	20428.89	6.19	Si
SLU 79	6.76	-39197	4234.13	47372	24234.92	5.724	Si
SLU 81	5	-48462	3198.76	58569	20120.54	6.29	Si
SLU 81	6.76	-39557	4111.96	47807	24145.24	5.872	Si
SLU 80	5	-47956	3436.79	57958	20442.18	5.948	Si
SLU 80	6.76	-39152	4118.97	47318	24245.6	5.886	Si
SLU 77	5	-48384	3367.47	58475	20170.69	5.99	Si
SLU 77	6.76	-39563	4310.65	47815	24143.59	5.601	Si
SLU 82	5	-48440	3335.3	58543	20134.29	6.037	Si
SLU 82	6.76	-39513	3996.8	47753	24156.62	6.044	Si
SLU 75	5	-47600	3388.87	57528	20661.96	6.097	Si
SLU 75	6.76	-38841	4058.32	46942	24317.83	5.992	Si
SLU 83	5	-49224	3313.9	59491	19614.12	5.919	Si
SLU 83	6.76	-40235	4249.13	48626	23961.12	5.639	Si
SLU 84	5	-49203	3450.44	59465	19628.58	5.689	Si
SLU 84	6.76	-40190	4133.96	48573	23973.82	5.799	Si
SLU 74	5	-47621	3252.33	57553	20649	6.349	Si
SLU 74	6.76	-38886	4173.48	46996	24307.76	5.824	Si
SLU 78	5	-48363	3504.01	58449	20184.36	5.76	Si
SLU 78	6.76	-39519	4195.49	47761	24154.98	5.757	Si

Verifica a pressoflessione nel piano secondo D.M. 17-01-18 NTC §7.8.2.2.1 in combinazioni sismiche, γM = 2

Comb.	Quota	N	M	σ0	Mu	c.s.	Verifica
SLV 11	5	-30349	6620.23	36678	31381.23	4.74	Si
SLV 11	6.76	-24883	1248.05	30072	27717	22.208	Si
SLV 6	5	-34736	-2380.68	41981	33690.6	14.152	Si
SLV 6	6.76	-27943	4253.61	33771	29876.12	7.024	Si
SLV 5	5	-34736	-2380.68	41981	33690.6	14.152	Si
SLV 5	6.76	-27943	4253.61	33771	29876.12	7.024	Si
SLV 4	5	-34863	5044.31	42134	33749.06	6.691	Si
SLV 4	6.76	-27384	3837.89	33095	29501.94	7.687	Si
SLV 3	5	-34863	5044.31	42134	33749.06	6.691	Si
SLV 3	6.76	-27384	3837.89	33095	29501.94	7.687	Si
SLV 12	5	-30349	6620.23	36678	31381.23	4.74	Si
SLV 12	6.76	-24883	1248.05	30072	27717	22.208	Si
SLV 7	5	-31988	7486.88	38660	32310.15	4.316	Si
SLV 7	6.76	-25670	2094.59	31024	28298.45	13.51	Si
SLV 1	5	-35687	2084.05	43131	34117.1	16.371	Si
SLV 1	6.76	-28066	4485.59	33919	29956.93	6.678	Si
SLV 2	5	-35687	2084.05	43131	34117.1	16.371	Si
SLV 2	6.76	-28066	4485.59	33919	29956.93	6.678	Si
SLV 8	5	-31988	7486.88	38660	32310.15	4.316	Si
SLV 8	6.76	-25670	2094.59	31024	28298.45	13.51	Si

Verifica a taglio nel piano secondo D.M. 17-01-18 (N.T.C.) §7.8.2.2.2 con rottura per scorrimento in combinazioni non sismiche, γM = 3

Comb.	Quota	N	V par	M	σ0	σN	l'	fvd	Vt scorr.	Vt fess.diag.	Vt,lim	c.s.	Verifica
SLU 34	5	-39616	1672	2990.55		47878	2.9551	10833	8964			5.36	Si
SLU 34	6.76	-32345	1542	3351.01		39091	2.9551	10768	8910			5.78	Si
SLU 10	5	-34659	1580	2436.62		41887	2.9551	10833	8964			5.68	Si
SLU 10	6.76	-28211	1509	2651.97		34095	2.9551	10102	8358			5.54	Si
SLU 44	5	-37532	1644	2558.23		45359	2.9551	10833	8964			5.45	Si
SLU 44	6.76	-30307	1404	2850.92		36628	2.9551	10439	8638			6.15	Si
SLU 31	5	-38853	1705	2875.42		46957	2.9551	10833	8964			5.26	Si
SLU 31	6.76	-31667	1608	3213.84		38272	2.9551	10658	8819			5.48	Si
SLU 76	5	-47179	1830	3412.68		57019	2.9551	10833	8964			4.9	Si
SLU 76	6.76	-38445	1649	3905.02		46463	2.9551	10833	8964			5.44	Si
SLU 52	5	-42222	1738	2858.74		51027	2.9551	10833	8964			5.16	Si
SLU 52	6.76	-34311	1615	3205.98		41467	2.9551	10833	8964			5.55	Si
SLU 55	5	-42984	1705	2973.88		51949	2.9551	10833	8964			5.26	Si
SLU 55	6.76	-34989	1550	3343.15		42286	2.9551	10833	8964			5.78	Si
SLU 65	5	-41726	1769	2997.03		50429	2.9551	10833	8964			5.07	Si
SLU 65	6.76	-33763	1503	3412.8		40804	2.9551	10833	8964			5.96	Si
SLU 73	5	-46416	1863	3297.54		56097	2.9551	10833	8964			4.81	Si
SLU 73	6.76	-37767	1714	3767.85		45644	2.9551	10833	8964			5.23	Si
SLU 68	5	-42489	1736	3112.16		51351	2.9551	10833	8964			5.16	Si
SLU 68	6.76	-34441	1437	3549.96		41624	2.9551	10833	8964			6.24	Si

Verifica a taglio nel piano secondo D.M. 17-01-18 (N.T.C.) §7.8.2.2.2 con rottura per scorrimento in combinazioni sismiche, γM = 2

Comb.	Quota	N	V par	M	σ0	σN	l'	fvd	Vt scorr.	Vt fess.diag.	Vt,lim	c.s.	Verifica
SLV 11	5	-30349	10540	6620.23		36678	2.9551	15669	12965			1.23	Si
SLV 11	6.76	-24883	11209	1248.05		30072	2.9551	14348	11872			1.06	Si
SLV 10	5	-33097	-9697	-3247.32		39999	2.9551	16250	13446			1.39	Si
SLV 10	6.76	-27156	-11783	3407.07		32820	2.9551	14897	12326			1.05	Si
SLV 9	5	-33097	-9697	-3247.32		39999	2.9551	16250	13446			1.39	Si
SLV 9	6.76	-27156	-11783	3407.07		32820	2.9551	14897	12326			1.05	Si
SLV 6	5	-34736	-9074	-2380.68		41981	2.9551	16250	13446			1.48	Si
SLV 6	6.76	-27943	-10096	4253.61		33771	2.9551	15088	12484			1.24	Si
SLV 3	5	-34863	4808	5044.31		42134	2.9551	16250	13446			2.8	Si
SLV 3	6.76	-27384	6816	3837.89		33095	2.9551	14952	12372			1.82	Si
SLV 8	5	-31988	11164	7486.88		38660	2.9551	16065	13293			1.19	Si
SLV 8	6.76	-25670	12896	2094.59		31024	2.9551	14538	12029			0.93	No, Vu<V
SLV 5	5	-34736	-9074	-2380.68		41981	2.9551	16250	13446			1.48	Si

Comb.	Quota	N	V par	M	σ0	σN	l'	fvd	Vt scorr.	Vt fess.diag.	Vt,lim	c.s.	Verifica
SLV 5	6.76	-27943	-10096	4253.61		33771	2.9551	15088	12484			1.24	Si
SLV 12	5	-30349	10540	6620.23		36678	2.9551	15669	12965			1.23	Si
SLV 12	6.76	-24883	11209	1248.05		30072	2.9551	14348	11872			1.06	Si
SLV 4	5	-34863	4808	5044.31		42134	2.9551	16250	13446			2.8	Si
SLV 4	6.76	-27384	6816	3837.89		33095	2.9551	14952	12372			1.82	Si
SLV 7	5	-31988	11164	7486.88		38660	2.9551	16065	13293			1.19	Si
SLV 7	6.76	-25670	12896	2094.59		31024	2.9551	14538	12029			0.93	No, Vu<V

Verifica a pressoflessione fuori piano D.M. 17-01-18 (N.T.C.)

quota 5.88 Wa 0.05 denominatore 8 γM = 2

Comb.	fd	Sa	σ0	N	M	Mc	Coeff.s.	Verifica
SLV 15	143750	0.37	32873	-27200	160.43	2783.49	17.35	Si
SLV 16	143750	0.37	32873	-27200	160.43	2783.49	17.35	Si
SLV 13	143750	0.37	33531	-27744	160.43	2818.29	17.57	Si
SLV 14	143750	0.37	33531	-27744	160.43	2818.29	17.57	Si
SLV 11	143750	0.37	33745	-27922	160.43	2829.45	17.64	Si
SLV 12	143750	0.37	33745	-27922	160.43	2829.45	17.64	Si
SLV 7	143750	0.37	35151	-29085	160.43	2900.48	18.08	Si
SLV 8	143750	0.37	35151	-29085	160.43	2900.48	18.08	Si
SLV 9	143750	0.37	35938	-29737	160.43	2938.64	18.32	Si
SLV 10	143750	0.37	35938	-29737	160.43	2938.64	18.32	Si

Verifica dei meccanismi locali di collasso con analisi cinematica lineare

forza di aggancio al piano = 0 quota mezzeria = 5.88 Wa = 0.05 Ta = 0.042

Comb.	N top	N base	V orto	α0	M*	e*	a0*	aLim	Verifica
SLV 10	-27156	-33097	-185	0.05	3074.1	0.969	0.74897	5.13414	No
SLV 9	-27156	-33097	-185	0.05	3074.1	0.969	0.74897	5.13414	No
SLV 6	-27943	-34736	-186	0.05	3154.2	0.97	0.74901	5.13414	No
SLV 5	-27943	-34736	-186	0.05	3154.2	0.97	0.74901	5.13414	No
SLV 2	-28066	-35687	-72	0.054	3166.7	0.97	0.80624	5.49084	No
SLV 1	-28066	-35687	-72	0.054	3166.7	0.97	0.80624	5.49084	No
SLV 14	-25442	-30222	-68	0.054	2899.6	0.968	0.81174	5.49084	No
SLV 13	-25442	-30222	-68	0.054	2899.6	0.968	0.81174	5.49084	No
SLV 12	-24883	-30349	146	0.051	2842.6	0.967	0.76933	5.13414	No
SLV 11	-24883	-30349	146	0.051	2842.6	0.967	0.76933	5.13414	No

Tabella dei coefficienti di sicurezza minimi

Stato limite	Coeff.s.	Comb.	Verifica
PF_SLU	5.601	SLU 77	Si
V_SLU	4.811	SLU 73	Si
PF_SLV	4.316	SLV 7	Si
V_SLV	0.933	SLV 7	No
PFFP_SLV	17.35	SLV 15	Si
R_SLV	0.146	SLV 9	No

Maschio 140

Verifiche condotte secondo D.M. 17-01-18 (N.T.C.)

Dati geometrici

X ini.	Y ini.	X fin.	Y fin.	Quota i.	Quota.s	l	Sp.	h netta	h ini.	h fin.	a	a.s.,sx	a.s.,dx
-11.003	-0.354	-11.003	0	L4	L5	0.354	0.28	3.55	3.55	3.55			

Caratteristiche del materiale

(Circolare 7 21-01-19 C8.5.I) Muratura in mattoni pieni e malta di calce LC2_Corti

fb	fk	fvk0	fmedio	τ0	fv0	μ	ϕ	fv,lim	E	G	FC
600000			345000	9000	20000	0.58	0.77	32500	320000000	128000000	1.2

Verifica a pressoflessione nel piano secondo D.M. 17-01-18 NTC §7.8.2.2.1 in combinazioni non sismiche, γM = 3

Comb.	Quota	N	M	σ0	Mu	c.s.	Verifica
SLU 77	5	-5601	-82.9	56530	303.25	3.658	Si
SLU 77	7.1	-8181	413.72	82568	0	0	No, Rottura per schiacciamento
SLU 78	5	-5755	-58.55	58084	292.16	4.99	Si
SLU 78	7.1	-8039	390.34	81134	5.67	0.015	No, M>Mu
SLU 83	5	-5670	-67.31	57229	298.39	4.433	Si
SLU 83	7.1	-8264	412.33	83410	0	0	No, Rottura per schiacciamento
SLU 79	5	-5534	-82.7	55854	307.74	3.721	Si
SLU 79	7.1	-8097	410.43	81729	0	0	No, Rottura per schiacciamento
SLU 80	5	-5688	-58.35	57408	297.11	5.092	Si
SLU 80	7.1	-7955	387.05	80294	20.11	0.052	No, M>Mu
SLU 75	5	-5677	-51.24	57295	297.92	5.814	Si
SLU 75	7.1	-7840	374.44	79135	39.57	0.106	No, M>Mu
SLU 74	5	-5523	-75.59	55742	308.48	4.081	Si
SLU 74	7.1	-7983	397.82	80569	15.42	0.039	No, M>Mu
SLU 81	5	-5592	-60	56440	303.86	5.064	Si
SLU 81	7.1	-8066	396.43	81410	0.84	0.002	No, M>Mu
SLU 82	5	-5746	-35.65	57994	292.83	8.214	Si
SLU 82	7.1	-7924	373.04	79976	25.51	0.068	No, M>Mu
SLU 84	5	-5824	-42.96	58782	286.84	6.677	Si
SLU 84	7.1	-8122	388.95	81975	0	0	No, Rottura per schiacciamento

Verifica a pressoflessione nel piano secondo D.M. 17-01-18 NTC §7.8.2.2.1 in combinazioni sismiche, γM = 2

Comb.	Quota	N	M	σ0	Mu	c.s.	Verifica
SLV 13	5	-1572	-288.18	0	0	0	No, e>l/2
SLV 13	7.1	-5326	319	53752	527.73	1.654	Si
SLV 5	5	-78	-541.56	0	0	0	No, e>l/2
SLV 5	7.1	-8604	752.86	86839	440.37	0.585	No, M>Mu
SLV 10	5	533	-588.17	0	0	0	No, Trazione
SLV 10	7.1	-8063	704.08	81378	476.43	0.677	No, M>Mu
SLV 1	5	-3608	-132.82	36420	448.12	3.374	Si
SLV 1	7.1	-7129	481.6	71955	518.54	1.077	Si
SLV 6	5	-78	-541.56	0	0	0	No, e>l/2
SLV 6	7.1	-8604	752.86	86839	440.37	0.585	No, M>Mu
SLV 14	5	-1572	-288.18	0	0	0	No, e>l/2
SLV 14	7.1	-5326	319	53752	527.73	1.654	Si
SLV 2	5	-3608	-132.82	36420	448.12	3.374	Si
SLV 2	7.1	-7129	481.6	71955	518.54	1.077	Si
SLV 7	5	-8130	470.91	82054	472.43	1.003	Si
SLV 7	7.1	-2587	-184.76	26111	359.9	1.948	Si
SLV 9	5	533	-588.17	0	0	0	No, Trazione
SLV 9	7.1	-8063	704.08	81378	476.43	0.677	No, M>Mu
SLV 8	5	-8130	470.91	82054	472.43	1.003	Si
SLV 8	7.1	-2587	-184.76	26111	359.9	1.948	Si

Verifica a taglio nel piano secondo D.M. 17-01-18 (N.T.C.) §7.8.2.2.2 con rottura per scorrimento in combinazioni non sismiche, γM = 3

Comb.	Quota	N	V par	M	σ0	σN	I'	fvd	Vt scorr.	Vt fess.diag.	Vt,lim	c.s.	Verifica
SLU 78	5	-5755	-574	-58.55		58084	0.3538	10833	1073			1.87	Si
SLU 78	7.1	-8039	-1584	390.34		81134	0.3538	10833	1073			0.68	No, Vu<V
SLU 83	5	-5670	-641	-67.31		57229	0.3538	10833	1073			1.68	Si
SLU 83	7.1	-8264	-1676	412.33		83410	0.3538	10833	1073			0.64	No, Vu<V
SLU 79	5	-5534	-672	-82.7		55854	0.3538	10833	1073			1.6	Si
SLU 79	7.1	-8097	-1669	410.43		81729	0.3538	10833	1073			0.64	No, Vu<V
SLU 77	5	-5601	-675	-82.9		56530	0.3538	10833	1073			1.59	Si
SLU 77	7.1	-8181	-1682	413.72		82568	0.3538	10833	1073			0.64	No, Vu<V
SLU 81	5	-5592	-607	-60		56440	0.3538	10833	1073			1.77	Si
SLU 81	7.1	-8066	-1611	396.43		81410	0.3538	10833	1073			0.67	No, Vu<V
SLU 84	5	-5824	-540	-42.96		58782	0.3538	10833	1073			1.99	Si
SLU 84	7.1	-8122	-1578	388.95		81975	0.3538	10833	1073			0.68	No, Vu<V
SLU 74	5	-5523	-642	-75.59		55742	0.3538	10833	1073			1.67	Si
SLU 74	7.1	-7983	-1617	397.82		80569	0.3538	10833	1073			0.66	No, Vu<V
SLU 80	5	-5688	-571	-58.35		57408	0.3538	10833	1073			1.88	Si
SLU 80	7.1	-7955	-1571	387.05		80294	0.3538	10833	1073			0.68	No, Vu<V
SLU 75	5	-5677	-541	-51.24		57295	0.3538	10833	1073			1.99	Si
SLU 75	7.1	-7840	-1518	374.44		79135	0.3538	10833	1073			0.71	No, Vu<V
SLU 69	5	-5101	-670	-101.75		51483	0.3538	10833	1073			1.6	Si
SLU 69	7.1	-7330	-1513	372.19		73982	0.3538	10833	1073			0.71	No, Vu<V

Verifica a taglio nel piano secondo D.M. 17-01-18 (N.T.C.) §7.8.2.2.2 con rottura per scorrimento in combinazioni sismiche, γM = 2

Comb.	Quota	N	V par	M	σ0	σN	I'	fvd	Vt scorr.	Vt fess.diag.	Vt,lim	c.s.	Verifica
SLV 13	5	-1572	-524	-288.18		0	0	8333	0			0	No, Vu<V
SLV 13	7.1	-5326	-2280	319		54177	0.3511	16250	1597			0.7	No, Vu<V
SLV 11	5	-7519	1827	424.3		75889	0.3538	16250	1610			0.88	No, Vu<V
SLV 11	7.1	-2046	1028	-233.54		38798	0.1883	16093	849			0.83	No, Vu<V
SLV 14	5	-1572	-524	-288.18		0	0	8333	0			0	No, Vu<V
SLV 14	7.1	-5326	-2280	319		54177	0.3511	16250	1597			0.7	No, Vu<V
SLV 6	5	-78	-2710	-541.56		0	0	8333	0			0	No, Vu<V
SLV 6	7.1	-8604	-3137	752.86		114544	0.2683	16250	1221			0.39	No, Vu<V
SLV 10	5	533	-2381	-588.17		0	0	8333	0			0	No, Vu<V
SLV 10	7.1	-8063	-3468	704.08		107127	0.2688	16250	1223			0.35	No, Vu<V
SLV 12	5	-7519	1827	424.3		75889	0.3538	16250	1610			0.88	No, Vu<V
SLV 12	7.1	-2046	1028	-233.54		38798	0.1883	16093	849			0.83	No, Vu<V
SLV 8	5	-8130	1498	470.91		82054	0.3538	16250	1610			1.07	Si
SLV 8	7.1	-2587	1359	-184.76		29191	0.3165	14172	1256			0.92	No, Vu<V
SLV 5	5	-78	-2710	-541.56		0	0	8333	0			0	No, Vu<V
SLV 5	7.1	-8604	-3137	752.86		114544	0.2683	16250	1221			0.39	No, Vu<V
SLV 9	5	533	-2381	-588.17		0	0	8333	0			0	No, Vu<V
SLV 9	7.1	-8063	-3468	704.08		107127	0.2688	16250	1223			0.35	No, Vu<V
SLV 7	5	-8130	1498	470.91		82054	0.3538	16250	1610			1.07	Si
SLV 7	7.1	-2587	1359	-184.76		29191	0.3165	14172	1256			0.92	No, Vu<V

Verifica a pressoflessione fuori piano D.M. 17-01-18 (N.T.C.)

quota 6.775 Wa 0.05 denominatore 8 γM = 2

Comb.	fd	Sa	σ0	N	M	Mc	Coeff.s.	Verifica
SLV 11	143750	0.39	23788	-2357	36.09	265.72	7.36	Si
SLV 12	143750	0.39	23788	-2357	36.09	265.72	7.36	Si
SLV 7	143750	0.39	28952	-2868	36.09	306.43	8.49	Si
SLV 8	143750	0.39	28952	-2868	36.09	306.43	8.49	Si
SLV 5	143750	0.39	85481	-8469	36.09	356.19	9.87	Si
SLV 6	143750	0.39	85481	-8469	36.09	356.19	9.87	Si
SLV 15	143750	0.39	37550	-3720	36.09	360.78	10	Si
SLV 16	143750	0.39	37550	-3720	36.09	360.78	10	Si
SLV 10	143750	0.39	80318	-7958	36.09	381.76	10.58	Si
SLV 9	143750	0.39	80318	-7958	36.09	381.76	10.58	Si

Verifica dei meccanismi locali di collasso con analisi cinematica lineare

forza di aggancio al piano = 0 quota mezzeria = 6.775 Wa = 0.05 Ta = 0.0752

Comb.	N top	N base	V orto	α0	M*	e*	a0*	aLim	Verifica
SLV 6	-789	-78	89	0	131.5	0.907	0	8.10374	No
SLV 9	-608	533	-24	0	0	0	0	8.10374	No, Trazione
SLV 13	-1435	-1572	-214	0	196.2	0.931	0	9.20386	No

Comb.	N top	N base	V orto	α0	M*	e*	a0*	aLim	Verifica
SLV 5	-789	-78	89	0	131.5	0.907	0	8.10374	No
SLV 10	-608	533	-24	0	0	0	0	8.10374	No, Trazione
SLV 2	-2038	-3608	164	0	257.3	0.945	0	9.20386	No
SLV 11	-3573	-7519	-188	0	413.3	0.964	0	8.10374	No
SLV 1	-2038	-3608	164	0	257.3	0.945	0	9.20386	No
SLV 14	-1435	-1572	-214	0	196.2	0.931	0	9.20386	No
SLV 12	-3573	-7519	-188	0	413.3	0.964	0	8.10374	No

Tabella dei coefficienti di sicurezza minimi

Stato limite	Coeff.s.	Comb.	Verifica
PF_SLU	0	SLU 77	No
V_SLU	0.638	SLU 77	No
PF_SLV	0	SLV 10	No
V_SLV	0	SLV 5	No
PFFP_SLV	7.363	SLV 11	Si
R_SLV	0	SLV 10	No

Maschio 141

Verifiche condotte secondo D.M. 17-01-18 (N.T.C.)

Dati geometrici

X ini.	Y ini.	X fin.	Y fin.	Quota i.	Quota.s	l	Sp.	h netta	h ini.	h fin.	a	a.s.,sx	a.s.,dx
-9.72	1.141	-9.72	1.426	L4	L5	0.285	0.14	3.55	3.55	3.55			

Caratteristiche del materiale

(Circolare 7 21-01-19 C8.5.I) Muratura in mattoni pieni e malta di calce LC2_Corti

fb	fk	fvk0	fmedio	τ0	fv0	μ	ϕ	fv,lim	E	G	FC
600000			345000	9000	20000	0.58	0.77	32500	320000000	128000000	1.2

Verifica a pressoflessione nel piano secondo D.M. 17-01-18 NTC §7.8.2.2.1 in combinazioni non sismiche, γM = 3

Comb.	Quota	N	M	σ0	Mu	c.s.	Verifica
SLU 54	5	-3846	179.37	96517	0	0	No, Rottura per schiacciamento
SLU 54	7.1	-258	-133.09	0	0	0	No, e>l/2
SLU 56	5	-3968	184.87	99569	0	0	No, Rottura per schiacciamento
SLU 56	7.1	-279	-137.19	0	0	0	No, e>l/2
SLU 53	5	-3851	179.77	96649	0	0	No, Rottura per schiacciamento
SLU 53	7.1	-259	-133.15	0	0	0	No, e>l/2
SLU 1	5	-2598	120.6	65199	73.8	0.612	No, M>Mu
SLU 1	7.1	-170	-89.32	0	0	0	No, e>l/2
SLU 55	5	-3803	177.95	95447	0	0	No, Rottura per schiacciamento
SLU 55	7.1	-236	-132.51	0	0	0	No, e>l/2
SLU 57	5	-3962	184.47	99437	0	0	No, Rottura per schiacciamento
SLU 57	7.1	-278	-137.12	0	0	0	No, e>l/2
SLU 59	5	-3923	183.32	98454	0	0	No, Rottura per schiacciamento
SLU 59	7.1	-257	-136.59	0	0	0	No, e>l/2
SLU 61	5	-3894	183.54	97714	0	0	No, Rottura per schiacciamento
SLU 61	7.1	-220	-136.22	0	0	0	No, e>l/2
SLU 60	5	-3899	183.95	97845	0	0	No, Rottura per schiacciamento
SLU 60	7.1	-221	-136.29	0	0	0	No, e>l/2
SLU 58	5	-3928	183.73	98586	0	0	No, Rottura per schiacciamento
SLU 58	7.1	-258	-136.65	0	0	0	No, e>l/2

Verifica a pressoflessione nel piano secondo D.M. 17-01-18 NTC §7.8.2.2.1 in combinazioni sismiche, γM = 2

Comb.	Quota	N	M	σ0	Mu	c.s.	Verifica
SLV 8	5	-6056	469.98	151987	0	0	No, Rottura per schiacciamento
SLV 8	7.1	2112	-282.39	0	0	0	No, Trazione
SLV 3	5	-4452	305.03	111719	54.28	0.178	No, M>Mu
SLV 3	7.1	1244	-217.53	0	0	0	No, Trazione
SLV 7	5	-6056	469.98	151987	0	0	No, Rottura per schiacciamento
SLV 7	7.1	2112	-282.39	0	0	0	No, Trazione
SLV 6	5	-86	-155.89	0	0	0	No, e>l/2
SLV 6	7.1	-1988	42.45	49893	167.41	3.944	Si
SLV 2	5	-2661	117.27	66772	171.73	1.464	Si
SLV 2	7.1	14	-120.07	0	0	0	No, Trazione
SLV 1	5	-2661	117.27	66772	171.73	1.464	Si
SLV 1	7.1	14	-120.07	0	0	0	No, Trazione
SLV 5	5	-86	-155.89	0	0	0	No, e>l/2
SLV 5	7.1	-1988	42.45	49893	167.41	3.944	Si
SLV 4	5	-4452	305.03	111719	54.28	0.178	No, M>Mu
SLV 4	7.1	1244	-217.53	0	0	0	No, Trazione
SLV 10	5	330	-202.26	0	0	0	No, Trazione
SLV 10	7.1	-2475	84.31	62100	173.18	2.054	Si
SLV 9	5	330	-202.26	0	0	0	No, Trazione
SLV 9	7.1	-2475	84.31	62100	173.18	2.054	Si

Verifica a taglio nel piano secondo D.M. 17-01-18 (N.T.C.) §7.8.2.2.2 con rottura per scorrimento in combinazioni non sismiche, γM = 3

Comb.	Quota	N	V par	M	σ0	σN	l'	fvd	Vt scorr.	Vt fess.diag.	Vt,lim	c.s.	Verifica
SLU 59	5	-3923	412	183.32		98454	0.2846	10833	432			1.05	Si
SLU 59	7.1	-257	381	-136.59		0	0	5556	0			0	No, Vu<V
SLU 56	5	-3968	416	184.87		99569	0.2846	10833	432			1.04	Si
SLU 56	7.1	-279	383	-137.19		0	0	5556	0			0	No, Vu<V
SLU 53	5	-3851	404	179.77		96649	0.2846	10833	432			1.07	Si
SLU 53	7.1	-259	372	-133.15		0	0	5556	0			0	No, Vu<V
SLU 58	5	-3928	414	183.73		98586	0.2846	10833	432			1.04	Si
SLU 58	7.1	-258	381	-136.65		0	0	5556	0			0	No, Vu<V
SLU 57	5	-3962	415	184.47		99437	0.2846	10833	432			1.04	Si
SLU 57	7.1	-278	383	-137.12		0	0	5556	0			0	No, Vu<V
SLU 61	5	-3894	413	183.54		97714	0.2846	10833	432			1.05	Si
SLU 61	7.1	-220	381	-136.22		0	0	5556	0			0	No, Vu<V
SLU 60	5	-3899	414	183.95		97845	0.2846	10833	432			1.04	Si
SLU 60	7.1	-221	381	-136.29		0	0	5556	0			0	No, Vu<V
SLU 1	5	-2598	271	120.6		65199	0.2846	10833	432			1.6	Si
SLU 1	7.1	-170	250	-89.32		0	0	5556	0			0	No, Vu<V
SLU 55	5	-3803	400	177.95		95447	0.2846	10833	432			1.08	Si
SLU 55	7.1	-236	370	-132.51		0	0	5556	0			0	No, Vu<V
SLU 54	5	-3846	403	179.37		96517	0.2846	10833	432			1.07	Si
SLU 54	7.1	-258	372	-133.09		0	0	5556	0			0	No, Vu<V

Verifica a taglio nel piano secondo D.M. 17-01-18 (N.T.C.) §7.8.2.2.2 con rottura per scorrimento in combinazioni sismiche, γM = 2

Comb.	Quota	N	V par	M	σ0	σN	l'	fvd	Vt scorr.	Vt fess.diag.	Vt,lim	c.s.	Verifica
SLV 9	5	330	-790	-202.26		0	0	8333	0			0	No, Vu<V
SLV 9	7.1	-2475	-185	84.31		62100	0.2846	16250	648			3.51	Si
SLV 5	5	-86	-664	-155.89		0	0	8333	0			0	No, Vu<V
SLV 5	7.1	-1988	-83	42.45		49893	0.2846	16250	648			7.79	Si
SLV 10	5	330	-790	-202.26		0	0	8333	0			0	No, Vu<V
SLV 10	7.1	-2475	-185	84.31		62100	0.2846	16250	648			3.51	Si
SLV 1	5	-2661	203	117.27		66772	0.2846	16250	648			3.18	Si
SLV 1	7.1	14	323	-120.07		0	0	8333	0			0	No, Vu<V
SLV 7	5	-6056	1392	469.98		222830	0.1941	16250	442			0.32	No, Vu<V
SLV 7	7.1	2112	739	-282.39		0	0	8333	0			0	No, Vu<V
SLV 8	5	-6056	1392	469.98		222830	0.1941	16250	442			0.32	No, Vu<V
SLV 8	7.1	2112	739	-282.39		0	0	8333	0			0	No, Vu<V
SLV 2	5	-2661	203	117.27		66772	0.2846	16250	648			3.18	Si
SLV 2	7.1	14	323	-120.07		0	0	8333	0			0	No, Vu<V
SLV 3	5	-4452	820	305.03		143633	0.2214	16250	504			0.61	No, Vu<V
SLV 3	7.1	1244	570	-217.53		0	0	8333	0			0	No, Vu<V
SLV 4	5	-4452	820	305.03		143633	0.2214	16250	504			0.61	No, Vu<V
SLV 4	7.1	1244	570	-217.53		0	0	8333	0			0	No, Vu<V
SLV 6	5	-86	-664	-155.89		0	0	8333	0			0	No, Vu<V
SLV 6	7.1	-1988	-83	42.45		49893	0.2846	16250	648			7.79	Si

Verifica a pressoflessione fuori piano D.M. 17-01-18 (N.T.C.)

quota 6.775 Wa 0.03 denominatore 8 γM = 2

Comb.	fd	Sa	σ0	N	M	Mc	Coeff.s.	Verifica
SLV 7	143750	0.39	0	2086	15.9	0	0	No, Trazione
SLV 1	143750	0.39	0	-11	15.9	0	0	No, e>t/2
SLV 2	143750	0.39	0	-11	15.9	0	0	No, e>t/2
SLV 3	143750	0.39	0	1219	15.9	0	0	No, Trazione
SLV 4	143750	0.39	0	1219	15.9	0	0	No, Trazione
SLV 8	143750	0.39	0	2086	15.9	0	0	No, Trazione
SLV 11	143750	0.39	0	1600	15.9	0	0	No, Trazione
SLV 12	143750	0.39	0	1600	15.9	0	0	No, Trazione
SLV 16	143750	0.39	10100	-402	15.9	25.84	1.63	Si
SLV 15	143750	0.39	10100	-402	15.9	25.84	1.63	Si

Verifica dei meccanismi locali di collasso con analisi cinematica lineare

forza di aggancio al piano = 0 quota mezzeria = 6.775 Wa = 0.03 Ta = 0.1503

Comb.	N top	N base	V orto	α0	M*	e*	a0*	aLim	Verifica
SLV 9	63	330	-1	0	0	0	0	16.55957	No, Trazione
SLV 10	63	330	-1	0	0	0	0	16.55957	No, Trazione
SLV 3	-1601	-4452	3	0.02	182.9	0.967	0.29529	16.59692	No
SLV 4	-1601	-4452	3	0.02	182.9	0.967	0.29529	16.59692	No
SLV 15	-1195	-3066	-3	0.02	141.6	0.958	0.29898	16.59692	No
SLV 16	-1195	-3066	-3	0.02	141.6	0.958	0.29898	16.59692	No
SLV 1	-955	-2661	3	0.02	117.2	0.951	0.30086	16.59692	No
SLV 2	-955	-2661	3	0.02	117.2	0.951	0.30086	16.59692	No
SLV 7	-2213	-6056	1	0.02	245.2	0.975	0.30405	16.55957	No
SLV 8	-2213	-6056	1	0.02	245.2	0.975	0.30405	16.55957	No

Tabella dei coefficienti di sicurezza minimi

Stato limite	Coeff.s.	Comb.	Verifica
PF_SLU	0	SLU 1	No
V_SLU	0	SLU 1	No
PF_SLV	0	SLV 12	No
V_SLV	0	SLV 1	No
PFFP_SLV	0	SLV 12	No
R_SLV	0	SLV 10	No

Maschio 142

Verifiche condotte secondo D.M. 17-01-18 (N.T.C.)

Dati geometrici

X ini.	Y ini.	X fin.	Y fin.	Quota i.	Quota.s	l	Sp.	h netta	h ini.	h fin.	a	a.s.,sx	a.s.,dx
-9.72	2.226	-9.72	6.64	L4	L5	4.414	0.14	3.55	3.55	3.55			

Caratteristiche del materiale

(Circolare 7 21-01-19 C8.5.I) Muratura in mattoni pieni e malta di calce LC2_Corti

fb	fk	fvk0	fmedio	τ0	fv0	μ	ϕ	fv,lim	E	G	FC
600000			345000	9000	20000	0.58	0.77	32500	320000000	128000000	1.2

Verifica a pressoflessione nel piano secondo D.M. 17-01-18 NTC §7.8.2.2.1 in combinazioni non sismiche, γM = 3

Comb.	Quota	N	M	σ0	Mu	c.s.	Verifica
SLU 81	5	-36866	-2486.82	59654	21779.67	8.758	Si
SLU 81	7.1	-31139	-10499.89	50388	26214.62	2.497	Si
SLU 77	5	-37084	-2459.94	60007	21554.08	8.762	Si
SLU 77	7.1	-31571	-10511.64	51086	25980.59	2.472	Si
SLU 79	5	-36654	-2387.16	59311	21995.03	9.214	Si
SLU 79	7.1	-31155	-10395.9	50414	26206.1	2.521	Si
SLU 78	5	-37073	-2447.43	59990	21564.77	8.811	Si
SLU 78	7.1	-31558	-10488.92	51065	25987.72	2.478	Si
SLU 82	5	-36855	-2474.31	59637	21790.15	8.807	Si
SLU 82	7.1	-31126	-10477.18	50367	26221.28	2.503	Si
SLU 83	5	-37562	-2521.16	60781	21043.96	8.347	Si
SLU 83	7.1	-31835	-10716.01	51514	25829.26	2.41	Si
SLU 74	5	-36387	-2425.61	58879	22260.55	9.177	Si
SLU 74	7.1	-30875	-10295.52	49960	26349.83	2.559	Si
SLU 80	5	-36643	-2374.65	59295	22005.33	9.267	Si
SLU 80	7.1	-31143	-10373.19	50393	26212.78	2.527	Si
SLU 75	5	-36377	-2413.09	58863	22270.61	9.229	Si
SLU 75	7.1	-30862	-10272.8	49940	26356.19	2.566	Si
SLU 84	5	-37552	-2508.64	60765	21055.07	8.393	Si
SLU 84	7.1	-31822	-10693.3	51493	25836.69	2.416	Si

Verifica a pressoflessione nel piano secondo D.M. 17-01-18 NTC §7.8.2.2.1 in combinazioni sismiche, γM = 2

Comb.	Quota	N	M	σ0	Mu	c.s.	Verifica
SLV 7	5	-24133	9223.76	39051	36241.25	3.929	Si
SLV 7	7.1	-25024	-13272.07	40493	36927.36	2.782	Si
SLV 3	5	-21541	4342.45	34857	33980.72	7.825	Si
SLV 3	7.1	-20578	-9498.12	33298	33040.21	3.479	Si
SLV 9	5	-24860	-12239.72	40228	36804.77	3.007	Si
SLV 9	7.1	-16258	-328.1	26307	28156.73	85.817	Si
SLV 12	5	-26010	7489.1	42088	37632.87	5.025	Si
SLV 12	7.1	-25933	-12773.31	41963	37579.53	2.942	Si
SLV 5	5	-22983	-10505.06	37191	35287	3.359	Si
SLV 5	7.1	-15349	-826.86	24837	26990.6	32.642	Si
SLV 11	5	-26010	7489.1	42088	37632.87	5.025	Si
SLV 11	7.1	-25933	-12773.31	41963	37579.53	2.942	Si
SLV 6	5	-22983	-10505.06	37191	35287	3.359	Si
SLV 6	7.1	-15349	-826.86	24837	26990.6	32.642	Si
SLV 8	5	-24133	9223.76	39051	36241.25	3.929	Si
SLV 8	7.1	-25024	-13272.07	40493	36927.36	2.782	Si
SLV 4	5	-21541	4342.45	34857	33980.72	7.825	Si
SLV 4	7.1	-20578	-9498.12	33298	33040.21	3.479	Si
SLV 10	5	-24860	-12239.72	40228	36804.77	3.007	Si
SLV 10	7.1	-16258	-328.1	26307	28156.73	85.817	Si

Verifica a taglio nel piano secondo D.M. 17-01-18 (N.T.C.) §7.8.2.2.2 con rottura per scorrimento in combinazioni non sismiche, γM = 3

Comb.	Quota	N	V par	M	σ0	σN	l'	fvd	Vt scorr.	Vt fess.diag.	Vt,lim	c.s.	Verifica
SLU 51	5	-29187	-189	-1592.56		47229	4.4142	10833	6695			35.34	Si
SLU 51	7.1	-24735	-188	-7942.18		40025	4.4142	10833	6695			35.57	Si
SLU 77	5	-37084	-188	-2459.94		60007	4.4142	10833	6695			35.57	Si
SLU 77	7.1	-31571	-187	-10511.64		51086	4.4142	10833	6695			35.8	Si
SLU 59	5	-32933	-192	-1985.34		53290	4.4142	10833	6695			34.8	Si
SLU 59	7.1	-27944	-191	-9193.38		45217	4.4142	10833	6695			35.02	Si
SLU 71	5	-32908	-190	-1994.38		53250	4.4142	10833	6695			35.19	Si
SLU 71	7.1	-27947	-189	-9144.7		45222	4.4142	10833	6695			35.42	Si
SLU 78	5	-37073	-191	-2447.43		59990	4.4142	10833	6695			34.97	Si
SLU 78	7.1	-31558	-190	-10488.92		51065	4.4142	10833	6695			35.2	Si
SLU 58	5	-32943	-189	-1997.85		53306	4.4142	10833	6695			35.39	Si
SLU 58	7.1	-27957	-188	-9216.09		45238	4.4142	10833	6695			35.62	Si
SLU 72	5	-32898	-193	-1981.87		53234	4.4142	10833	6695			34.6	Si
SLU 72	7.1	-27934	-192	-9121.99		45201	4.4142	10833	6695			34.83	Si
SLU 80	5	-36643	-196	-2374.65		59295	4.4142	10833	6695			34.09	Si
SLU 80	7.1	-31143	-195	-10373.19		50393	4.4142	10833	6695			34.3	Si
SLU 70	5	-33328	-188	-2054.65		53929	4.4142	10833	6695			35.52	Si
SLU 70	7.1	-28349	-187	-9237.72		45873	4.4142	10833	6695			35.75	Si
SLU 79	5	-36654	-193	-2387.16		59311	4.4142	10833	6695			34.66	Si
SLU 79	7.1	-31155	-192	-10395.9		50414	4.4142	10833	6695			34.88	Si

Verifica a taglio nel piano secondo D.M. 17-01-18 (N.T.C.) §7.8.2.2.2 con rottura per scorrimento in combinazioni sismiche, γM = 2

Comb.	Quota	N	V par	M	σ0	σN	l'	fvd	Vt scorr.	Vt fess.diag.	Vt,lim	c.s.	Verifica
SLV 8	5	-24133	12062	9223.76		39051	4.4142	16144	9977			0.83	No, Vu<V
SLV 8	7.1	-25024	11143	-13272.07		40493	4.4142	16250	10042			0.9	No, Vu<V
SLV 5	5	-22983	-12797	-10505.06		37191	4.4142	15771	9747			0.76	No, Vu<V
SLV 5	7.1	-15349	-11813	-826.86		24837	4.4142	13301	8220			0.7	No, Vu<V
SLV 10	5	-24860	-12314	-12239.72		40228	4.4142	16250	10042			0.82	No, Vu<V
SLV 10	7.1	-16258	-11394	-328.1		26307	4.4142	13595	8401			0.74	No, Vu<V
SLV 9	5	-24860	-12314	-12239.72		40228	4.4142	16250	10042			0.82	No, Vu<V
SLV 9	7.1	-16258	-11394	-328.1		26307	4.4142	13595	8401			0.74	No, Vu<V
SLV 2	5	-21196	-4660	-1576.2		34299	4.4142	15193	9389			2.01	Si

Comb.	Quota	N	V par	M	σ0	σN	l'	fvd	Vt scorr.	Vt fess.diag.	Vt,lim	c.s.	Verifica
SLV 2	7.1	-17675	-4267	-5764.56		28601	4.4142	14053	8685			2.04	Si
SLV 11	5	-26010	12545	7489.1		42088	4.4142	16250	10042			0.8	No, Vu<V
SLV 11	7.1	-25933	11563	-12773.31		41963	4.4142	16250	10042			0.87	No, Vu<V
SLV 6	5	-22983	-12797	-10505.06		37191	4.4142	15771	9747			0.76	No, Vu<V
SLV 6	7.1	-15349	-11813	-826.86		24837	4.4142	13301	8220			0.7	No, Vu<V
SLV 1	5	-21196	-4660	-1576.2		34299	4.4142	15193	9389			2.01	Si
SLV 1	7.1	-17675	-4267	-5764.56		28601	4.4142	14053	8685			2.04	Si
SLV 7	5	-24133	12062	9223.76		39051	4.4142	16144	9977			0.83	No, Vu<V
SLV 7	7.1	-25024	11143	-13272.07		40493	4.4142	16250	10042			0.9	No, Vu<V
SLV 12	5	-26010	12545	7489.1		42088	4.4142	16250	10042			0.8	No, Vu<V
SLV 12	7.1	-25933	11563	-12773.31		41963	4.4142	16250	10042			0.87	No, Vu<V

Verifica a pressoflessione fuori piano D.M. 17-01-18 (N.T.C.)

quota 6.775 Wa 0.03 denominatore 8 γM = 2

Comb.	fd	Sa	σ0	N	M	Mc	Coeff.s.	Verifica
SLV 6	143750	0.39	27165	-16788	246.55	913.89	3.71	Si
SLV 5	143750	0.39	27165	-16788	246.55	913.89	3.71	Si
SLV 10	143750	0.39	28336	-17511	246.55	941.52	3.82	Si
SLV 9	143750	0.39	28336	-17511	246.55	941.52	3.82	Si
SLV 1	143750	0.39	30573	-18894	246.55	991.63	4.02	Si
SLV 2	143750	0.39	30573	-18894	246.55	991.63	4.02	Si
SLV 13	143750	0.39	34474	-21304	246.55	1070.55	4.34	Si
SLV 14	143750	0.39	34474	-21304	246.55	1070.55	4.34	Si
SLV 3	143750	0.39	34663	-21422	246.55	1074.12	4.36	Si
SLV 4	143750	0.39	34663	-21422	246.55	1074.12	4.36	Si

Verifica dei meccanismi locali di collasso con analisi cinematica lineare

forza di aggancio al piano = 0 quota mezzeria = 6.775 Wa = 0.03 Ta = 0.1503

Comb.	N top	N base	V orto	α0	M*	e*	a0*	aLim	Verifica
SLV 11	-16832	-26010	-4	0.022	2023.2	0.955	0.32803	16.55957	No
SLV 12	-16832	-26010	-4	0.022	2023.2	0.955	0.32803	16.55957	No
SLV 15	-16565	-27797	-4	0.022	1996.2	0.955	0.32918	16.59692	No
SLV 16	-16565	-27797	-4	0.022	1996.2	0.955	0.32918	16.59692	No
SLV 7	-16239	-24133	-3	0.022	1963	0.954	0.33056	16.55957	No
SLV 8	-16239	-24133	-3	0.022	1963	0.954	0.33056	16.55957	No
SLV 14	-15744	-27452	-2	0.022	1912.7	0.953	0.33287	16.59692	No
SLV 13	-15744	-27452	-2	0.022	1912.7	0.953	0.33287	16.59692	No
SLV 4	-14589	-21541	1	0.022	1795.5	0.95	0.33654	16.59692	No
SLV 3	-14589	-21541	1	0.022	1795.5	0.95	0.33654	16.59692	No

Tabella dei coefficienti di sicurezza minimi

Stato limite	Coeff.s.	Comb.	Verifica
PF_SLU	2.41	SLU 83	Si
V_SLU	34.09	SLU 80	Si
PF_SLV	2.782	SLV 7	Si
V_SLV	0.696	SLV 5	No
PFFP_SLV	3.707	SLV 5	Si
R_SLV	0.02	SLV 11	No

Maschio 143

Verifiche condotte secondo D.M. 17-01-18 (N.T.C.)

Dati geometrici

X ini.	Y ini.	X fin.	Y fin.	Quota i.	Quota.s	l	Sp.	h netta	h ini.	h fin.	a	a.s.,sx	a.s.,dx
-11.003	-4.697	-9.867	-4.697	L4	L5	1.136	0.3	3.55	3.55	3.55			

Caratteristiche del materiale

(Circolare 7 21-01-19 C8.5.I) Muratura in mattoni pieni e malta di calce LC2_Corti

fb	fk	fvk0	fmedio	τ0	fv0	μ	ϕ	fv,lim	E	G	FC
600000			345000	9000	20000	0.58	0.77	32500	320000000	128000000	1.2

Verifica a pressoflessione nel piano secondo D.M. 17-01-18 NTC §7.8.2.2.1 in combinazioni non sismiche, γM = 3

Comb.	Quota	N	M	σ0	Mu	c.s.	Verifica
SLU 41	5	-9660	-297.26	28347	3577.4	12.034	Si
SLU 41	8.11	-7800	147.97	22888	3185.38	21.527	Si
SLU 84	5	-11758	-306.1	34502	3849.54	12.576	Si
SLU 84	8.11	-9372	165.81	27501	3525.9	21.265	Si
SLU 40	5	-9424	-278.03	27653	3535.4	12.716	Si
SLU 40	8.11	-7591	147.15	22274	3132.36	21.287	Si
SLU 81	5	-11716	-322.16	34379	3845.86	11.938	Si
SLU 81	8.11	-9213	166.34	27035	3496.06	21.018	Si
SLU 77	5	-11725	-300.47	34406	3846.69	12.802	Si
SLU 77	8.11	-9312	154.99	27324	3514.7	22.676	Si
SLU 42	5	-9563	-279.61	28062	3560.41	12.733	Si
SLU 42	8.11	-7775	147.3	22814	3179.09	21.583	Si
SLU 39	5	-9521	-295.68	27939	3552.95	12.016	Si
SLU 39	8.11	-7616	147.83	22348	3138.85	21.233	Si
SLU 79	5	-11689	-300.85	34301	3843.5	12.775	Si
SLU 79	8.11	-9284	155.01	27242	3509.47	22.64	Si
SLU 82	5	-11618	-304.51	34093	3837.05	12.601	Si
SLU 82	8.11	-9188	165.66	26960	3491.22	21.075	Si
SLU 83	5	-11855	-323.74	34787	3857.8	11.916	Si
SLU 83	8.11	-9397	166.48	27575	3530.55	21.207	Si

Verifica a pressoflessione nel piano secondo D.M. 17-01-18 NTC §7.8.2.2.1 in combinazioni sismiche, γM = 2

Comb.	Quota	N	M	σ0	Mu	c.s.	Verifica
SLV 2	5	-7106	-1249.17	20852	3347.27	2.68	Si
SLV 2	8.11	-6733	250.34	19758	3205.87	12.806	Si
SLV 16	5	-9517	872.22	27926	4169.84	4.781	Si
SLV 16	8.11	-6044	-48.25	17736	2934.63	60.824	Si
SLV 14	5	-13504	1075.05	39626	5182.46	4.821	Si
SLV 14	8.11	-8309	84.6	24382	3777.52	44.651	Si
SLV 8	5	-706	-875.16	0	0	0	No, e>l/2
SLV 8	8.11	-2378	-95.51	6978	1273.47	13.334	Si
SLV 15	5	-9517	872.22	27926	4169.84	4.781	Si
SLV 15	8.11	-6044	-48.25	17736	2934.63	60.824	Si
SLV 3	5	-3119	-1452	9152	1638.75	1.129	Si
SLV 3	8.11	-4469	117.49	13113	2265.64	19.283	Si
SLV 4	5	-3119	-1452	9152	1638.75	1.129	Si
SLV 4	8.11	-4469	117.49	13113	2265.64	19.283	Si
SLV 13	5	-13504	1075.05	39626	5182.46	4.821	Si
SLV 13	8.11	-8309	84.6	24382	3777.52	44.651	Si
SLV 7	5	-706	-875.16	0	0	0	No, e>l/2
SLV 7	8.11	-2378	-95.51	6978	1273.47	13.334	Si
SLV 1	5	-7106	-1249.17	20852	3347.27	2.68	Si
SLV 1	8.11	-6733	250.34	19758	3205.87	12.806	Si

Verifica a taglio nel piano secondo D.M. 17-01-18 (N.T.C.) §7.8.2.2.2 con rottura per scorrimento in combinazioni non sismiche, γM = 3

Comb.	Quota	N	V par	M	σ0	σN	I'	fvd	Vt scorr.	Vt fess.diag.	Vt,lim	c.s.	Verifica
SLU 82	5	-11618	-278	-304.51		34093	1.1359	10101	3442			12.37	Si
SLU 82	8.11	-9188	230	165.66		26960	1.1359	9150	3118			13.56	Si
SLU 35	5	-9530	-256	-273.98		27966	1.1359	9284	3164			12.38	Si
SLU 35	8.11	-7714	188	136.49		22637	1.1359	8574	2922			15.52	Si
SLU 83	5	-11855	-292	-323.74		34787	1.1359	10194	3474			11.88	Si
SLU 83	8.11	-9397	235	166.48		27575	1.1359	9232	3146			13.37	Si
SLU 37	5	-9495	-257	-274.37		27861	1.1359	9270	3159			12.29	Si
SLU 37	8.11	-7687	188	136.51		22556	1.1359	8563	2918			15.54	Si
SLU 42	5	-9563	-265	-279.61		28062	1.1359	9297	3168			11.97	Si
SLU 42	8.11	-7775	186	147.3		22814	1.1359	8597	2930			15.75	Si
SLU 40	5	-9424	-264	-278.03		27653	1.1359	9243	3150			11.94	Si
SLU 40	8.11	-7591	180	147.15		22274	1.1359	8525	2905			16.13	Si
SLU 39	5	-9521	-277	-295.68		27939	1.1359	9281	3163			11.41	Si
SLU 39	8.11	-7616	179	147.83		22348	1.1359	8535	2909			16.21	Si
SLU 81	5	-11716	-292	-322.16		34379	1.1359	10139	3455			11.85	Si
SLU 81	8.11	-9213	229	166.34		27035	1.1359	9160	3122			13.62	Si
SLU 41	5	-9660	-278	-297.26		28347	1.1359	9335	3181			11.44	Si
SLU 41	8.11	-7800	185	147.97		22888	1.1359	8607	2933			15.82	Si
SLU 32	5	-9391	-255	-272.4		27557	1.1359	9230	3145			12.35	Si
SLU 32	8.11	-7530	182	136.34		22097	1.1359	8502	2897			15.89	Si

Verifica a taglio nel piano secondo D.M. 17-01-18 (N.T.C.) §7.8.2.2.2 con rottura per scorrimento in combinazioni sismiche, γM = 2

Comb.	Quota	N	V par	M	σ0	σN	I'	fvd	Vt scorr.	Vt fess.diag.	Vt,lim	c.s.	Verifica
SLV 16	5	-9517	2818	872.22		27926	1.1359	13918	4743			1.68	Si
SLV 16	8.11	-6044	783	-48.25		17736	1.1359	11881	4049			5.17	Si
SLV 14	5	-13504	4091	1075.05		39626	1.1359	16250	5538			1.35	Si
SLV 14	8.11	-8309	1064	84.6		24382	1.1359	13210	4502			4.23	Si
SLV 8	5	-706	-3375	-875.16		0	0	8333	0			0	No, Vu<V
SLV 8	8.11	-2378	-524	-95.51		6978	1.1359	9729	3315			6.32	Si
SLV 13	5	-13504	4091	1075.05		39626	1.1359	16250	5538			1.35	Si
SLV 13	8.11	-8309	1064	84.6		24382	1.1359	13210	4502			4.23	Si
SLV 15	5	-9517	2818	872.22		27926	1.1359	13918	4743			1.68	Si
SLV 15	8.11	-6044	783	-48.25		17736	1.1359	11881	4049			5.17	Si
SLV 7	5	-706	-3375	-875.16		0	0	8333	0			0	No, Vu<V
SLV 7	8.11	-2378	-524	-95.51		6978	1.1359	9729	3315			6.32	Si
SLV 2	5	-7106	-3151	-1249.17		20852	1.1359	12504	4261			1.35	Si
SLV 2	8.11	-6733	-445	250.34		19758	1.1359	12285	4187			9.41	Si
SLV 3	5	-3119	-4424	-1452		33835	0.3073	15100	1392			0.31	No, Vu<V
SLV 3	8.11	-4469	-725	117.49		13113	1.1359	10956	3734			5.15	Si
SLV 1	5	-7106	-3151	-1249.17		20852	1.1359	12504	4261			1.35	Si
SLV 1	8.11	-6733	-445	250.34		19758	1.1359	12285	4187			9.41	Si
SLV 4	5	-3119	-4424	-1452		33835	0.3073	15100	1392			0.31	No, Vu<V
SLV 4	8.11	-4469	-725	117.49		13113	1.1359	10956	3734			5.15	Si

Verifica a pressoflessione fuori piano D.M. 17-01-18 (N.T.C.)

quota 6.775 Wa 0.05 denominatore 8 γM = 2

Comb.	fd	Sa	σ0	N	M	Mc	Coeff.s.	Verifica
SLV 11	143750	0.39	9168	-3124	126.9	433.46	3.42	Si
SLV 12	143750	0.39	9168	-3124	126.9	433.46	3.42	Si
SLV 7	143750	0.39	9448	-3220	126.9	445.6	3.51	Si
SLV 8	143750	0.39	9448	-3220	126.9	445.6	3.51	Si
SLV 15	143750	0.39	18101	-6168	126.9	788.2	6.21	Si
SLV 16	143750	0.39	18101	-6168	126.9	788.2	6.21	Si
SLV 4	143750	0.39	19034	-6487	126.9	821.41	6.47	Si
SLV 3	143750	0.39	19034	-6487	126.9	821.41	6.47	Si
SLV 13	143750	0.39	26038	-8873	126.9	1047.36	8.25	Si
SLV 14	143750	0.39	26038	-8873	126.9	1047.36	8.25	Si

Verifica dei meccanismi locali di collasso con analisi cinematica lineare

forza di aggancio al piano = 0 quota mezzeria = 6.775 Wa = 0.05 Ta = 0.0702

Comb.	N top	N base	V orto	α0	M*	e*	a0*	aLim	Verifica
SLV 15	-4314	-9517	64	0.039	612.4	0.926	0.61193	8.55261	No
SLV 16	-4314	-9517	64	0.039	612.4	0.926	0.61193	8.55261	No
SLV 1	-6703	-7106	-63	0.04	853.9	0.943	0.61694	8.55261	No

Comb.	N top	N base	V orto	α0	M*	e*	a0*	aLim	Verifica
SLV 2	-6703	-7106	-63	0.04	853.9	0.943	0.61694	8.55261	No
SLV 12	-2467	-2626	73	0.035	428	0.904	0.55625	7.59393	No
SLV 11	-2467	-2626	73	0.035	428	0.904	0.55625	7.59393	No
SLV 6	-8549	-13997	-73	0.039	1041.3	0.952	0.60258	7.59393	No
SLV 5	-8549	-13997	-73	0.039	1041.3	0.952	0.60258	7.59393	No
SLV 13	-6083	-13504	28	0.045	791.1	0.94	0.69204	8.55261	No
SLV 14	-6083	-13504	28	0.045	791.1	0.94	0.69204	8.55261	No

Tabella dei coefficienti di sicurezza minimi

Stato limite	Coeff.s.	Comb.	Verifica
PF_SLU	11.916	SLU 83	Si
V_SLU	11.41	SLU 39	Si
PF_SLV	0	SLV 7	No
V_SLV	0	SLV 7	No
PFFP_SLV	3.416	SLV 11	Si
R_SLV	0.072	SLV 15	No

Maschio 144

Verifiche condotte secondo D.M. 17-01-18 (N.T.C.)

Dati geometrici

X ini.	Y ini.	X fin.	Y fin.	Quota i.	Quota.s	l	Sp.	h netta	h ini.	h fin.	a	a.s.,sx	a.s.,dx
-8.027	-4.697	-7.763	-4.697	L4	L5	0.264	0.3	3.55	3.55	3.55			

Caratteristiche del materiale

(Circolare 7 21-01-19 C8.5.I) Muratura in mattoni pieni e malta di calce LC2_Corti

fb	fk	fvk0	fmedio	τ0	fv0	μ	ϕ	fv,lim	E	G	FC
600000			345000	9000	20000	0.58	0.77	32500	320000000	128000000	1.2

Verifica a pressoflessione nel piano secondo D.M. 17-01-18 NTC §7.8.2.2.1 in combinazioni non sismiche, γM = 3

Comb.	Quota	N	M	σ0	Mu	c.s.	Verifica
SLU 5	5	-2656	-24.14	33521	206.34	8.548	Si
SLU 5	8.11	-1987	26.19	25079	181.56	6.932	Si
SLU 68	5	-3643	-21.22	45987	209.46	9.87	Si
SLU 68	8.11	-2491	30.67	31450	201.95	6.585	Si
SLU 49	5	-3527	-19.86	44519	211.17	10.634	Si
SLU 49	8.11	-2210	29.31	27901	191.88	6.547	Si
SLU 51	5	-3518	-20.8	44411	211.27	10.157	Si
SLU 51	8.11	-2226	29.96	28099	192.53	6.426	Si
SLU 44	5	-3305	-22.27	41723	212.88	9.56	Si
SLU 44	8.11	-2237	28.04	28244	192.99	6.882	Si
SLU 9	5	-2791	-19.26	35229	209.13	10.856	Si
SLU 9	8.11	-1874	25.44	23652	175.56	6.9	Si
SLU 72	5	-3778	-16.35	47695	206.78	12.649	Si
SLU 72	8.11	-2378	29.92	30023	198.29	6.627	Si
SLU 55	5	-3637	-15.06	45905	209.57	13.914	Si
SLU 55	8.11	-2480	29.17	31308	201.61	6.912	Si
SLU 70	5	-3787	-15.41	47802	206.59	13.409	Si
SLU 70	8.11	-2363	29.27	29825	197.74	6.756	Si
SLU 47	5	-3383	-25.67	42703	212.51	8.277	Si
SLU 47	8.11	-2339	30.71	29526	196.89	6.412	Si

Verifica a pressoflessione nel piano secondo D.M. 17-01-18 NTC §7.8.2.2.1 in combinazioni sismiche, γM = 2

Comb.	Quota	N	M	σ0	Mu	c.s.	Verifica
SLV 9	5	-5064	137.69	63929	318.83	2.316	Si
SLV 9	8.11	3090	-8.12	0	0	0	No, Trazione
SLV 6	5	-5616	-38.68	70891	311.3	8.048	Si
SLV 6	8.11	3518	-27.93	0	0	0	No, Trazione
SLV 5	5	-5616	-38.68	70891	311.3	8.048	Si
SLV 5	8.11	3518	-27.93	0	0	0	No, Trazione
SLV 11	5	-122	47.23	0	0	0	No, e>l/2
SLV 11	8.11	-6383	57.04	80573	287.03	5.032	Si
SLV 8	5	-673	-129.15	0	0	0	No, e>l/2
SLV 8	8.11	-5955	37.23	75172	302.55	8.127	Si
SLV 2	5	-4529	-276.11	57174	318.2	1.152	Si
SLV 2	8.11	702	-28.23	0	0	0	No, Trazione
SLV 12	5	-122	47.23	0	0	0	No, e>l/2
SLV 12	8.11	-6383	57.04	80573	287.03	5.032	Si
SLV 1	5	-4529	-276.11	57174	318.2	1.152	Si
SLV 1	8.11	702	-28.23	0	0	0	No, Trazione
SLV 10	5	-5064	137.69	63929	318.83	2.316	Si
SLV 10	8.11	3090	-8.12	0	0	0	No, Trazione
SLV 7	5	-673	-129.15	0	0	0	No, e>l/2
SLV 7	8.11	-5955	37.23	75172	302.55	8.127	Si

Verifica a taglio nel piano secondo D.M. 17-01-18 (N.T.C.) §7.8.2.2.2 con rottura per scorrimento in combinazioni non sismiche, γM = 3

Comb.	Quota	N	V par	M	σ0	σN	l'	fvd	Vt scorr.	Vt fess.diag.	Vt,lim	c.s.	Verifica
SLU 55	5	-3637	1	-15.06		45905	0.2641	10833	858			1000	Si
SLU 55	8.11	-2480	215	29.17		31308	0.2641	9730	771			3.59	Si
SLU 73	5	-3819	2	-7.2		48208	0.2641	10833	858			531.57	Si
SLU 73	8.11	-2531	226	26.47		31950	0.2641	9816	778			3.44	Si
SLU 76	5	-3897	1	-10.61		49189	0.2641	10833	858			624.05	Si
SLU 76	8.11	-2633	231	29.13		33232	0.2641	9987	791			3.42	Si
SLU 75	5	-3963	-10	-1.39		50024	0.2641	10833	858			83.64	Si
SLU 75	8.11	-2402	212	25.07		30324	0.2641	9599	760			3.59	Si

Comb.	Quota	N	V par	M	σ0	σN	l'	fvd	Vt scorr.	Vt fess.diag.	Vt,lim	c.s.	Verifica
SLU 68	5	-3643	-4	-21.22		45987	0.2641	10833	858			236.42	Si
SLU 68	8.11	-2491	222	30.67		31450	0.2641	9749	772			3.48	Si
SLU 82	5	-3985	-7	5.62		50308	0.2641	10833	858			118.72	Si
SLU 82	8.11	-2377	210	22.4		30004	0.2641	9556	757			3.61	Si
SLU 84	5	-4063	-7	2.22		51288	0.2641	10833	858			114.92	Si
SLU 84	8.11	-2479	216	25.06		31286	0.2641	9727	771			3.57	Si
SLU 65	5	-3565	-3	-17.82		45006	0.2641	10833	858			253.1	Si
SLU 65	8.11	-2390	216	28.01		30168	0.2641	9578	759			3.51	Si
SLU 80	5	-4032	-10	-5.74		50896	0.2641	10833	858			87.11	Si
SLU 80	8.11	-2520	217	28.38		31805	0.2641	9796	776			3.57	Si
SLU 78	5	-4041	-11	-4.79		51004	0.2641	10833	858			81.73	Si
SLU 78	8.11	-2504	217	27.73		31607	0.2641	9770	774			3.56	Si

Verifica a taglio nel piano secondo D.M. 17-01-18 (N.T.C.) §7.8.2.2.2 con rottura per scorrimento in combinazioni sismiche, γM = 2

Comb.	Quota	N	V par	M	σ0	σN	l'	fvd	Vt scorr.	Vt fess.diag.	Vt,lim	c.s.	Verifica
SLV 2	5	-4529	-247	-276.11		70807	0.2132	16250	1039			4.2	Si
SLV 2	8.11	702	661	-28.23		0	0	8333	0			0	No, Vu<V
SLV 11	5	-122	-418	47.23		0	0	8333	0			0	No, Vu<V
SLV 11	8.11	-6383	-37	57.04		80573	0.2641	16250	1287			35.06	Si
SLV 9	5	-5064	599	137.69		63929	0.2641	16250	1287			2.15	Si
SLV 9	8.11	3090	-28	-8.12		0	0	8333	0			0	No, Vu<V
SLV 1	5	-4529	-247	-276.11		70807	0.2132	16250	1039			4.2	Si
SLV 1	8.11	702	661	-28.23		0	0	8333	0			0	No, Vu<V
SLV 7	5	-673	-644	-129.15		0	0	8333	0			0	No, Vu<V
SLV 7	8.11	-5955	283	37.23		75172	0.2641	16250	1287			4.55	Si
SLV 10	5	-5064	599	137.69		63929	0.2641	16250	1287			2.15	Si
SLV 10	8.11	3090	-28	-8.12		0	0	8333	0			0	No, Vu<V
SLV 12	5	-122	-418	47.23		0	0	8333	0			0	No, Vu<V
SLV 12	8.11	-6383	-37	57.04		80573	0.2641	16250	1287			35.06	Si
SLV 5	5	-5616	373	-38.68		70891	0.2641	16250	1287			3.45	Si
SLV 5	8.11	3518	291	-27.93		0	0	8333	0			0	No, Vu<V
SLV 8	5	-673	-644	-129.15		0	0	8333	0			0	No, Vu<V
SLV 8	8.11	-5955	283	37.23		75172	0.2641	16250	1287			4.55	Si
SLV 6	5	-5616	373	-38.68		70891	0.2641	16250	1287			3.45	Si
SLV 6	8.11	3518	291	-27.93		0	0	8333	0			0	No, Vu<V

Verifica a pressoflessione fuori piano D.M. 17-01-18 (N.T.C.)

quota 6.775 Wa 0.05 denominatore 8 γM = 2

Comb.	fd	Sa	σ0	N	M	Mc	Coeff.s.	Verifica
SLV 5	143750	0.39	0	1913	29.5	0	0	No, Trazione
SLV 1	143750	0.39	0	76	29.5	0	0	No, Trazione
SLV 9	143750	0.39	0	1237	29.5	0	0	No, Trazione
SLV 2	143750	0.39	0	76	29.5	0	0	No, Trazione
SLV 6	143750	0.39	0	1913	29.5	0	0	No, Trazione
SLV 10	143750	0.39	0	1237	29.5	0	0	No, Trazione
SLV 4	143750	0.39	27461	-2175	29.5	252.98	8.58	Si
SLV 3	143750	0.39	27461	-2175	29.5	252.98	8.58	Si
SLV 14	143750	0.39	27510	-2179	29.5	253.3	8.59	Si
SLV 13	143750	0.39	27510	-2179	29.5	253.3	8.59	Si

Verifica dei meccanismi locali di collasso con analisi cinematica lineare

forza di aggancio al piano = 0 quota mezzeria = 6.775 Wa = 0.05 Ta = 0.0702

Comb.	N top	N base	V orto	α0	M*	e*	a0*	aLim	Verifica
SLV 5	2714	-5616	-18	0	0	0	0	7.59393	No, Trazione
SLV 6	2714	-5616	-18	0	0	0	0	7.59393	No, Trazione
SLV 10	2667	-5064	-16	0	0	0	0	7.59393	No, Trazione
SLV 9	2667	-5064	-16	0	0	0	0	7.59393	No, Trazione
SLV 15	-2889	-1208	11	0.042	333.7	0.964	0.63334	8.55261	No
SLV 16	-2889	-1208	11	0.042	333.7	0.964	0.63334	8.55261	No
SLV 4	-2731	-3047	4	0.044	317.6	0.963	0.67027	8.55261	No
SLV 3	-2731	-3047	4	0.044	317.6	0.963	0.67027	8.55261	No
SLV 12	-5795	-122	22	0.04	629.7	0.98	0.5984	7.59393	No
SLV 11	-5795	-122	22	0.04	629.7	0.98	0.5984	7.59393	No

Tabella dei coefficienti di sicurezza minimi

Stato limite	Coeff.s.	Comb.	Verifica
PF_SLU	6.412	SLU 47	Si
V_SLU	3.419	SLU 76	Si
PF_SLV	0	SLV 10	No
V_SLV	0	SLV 1	No
PFFP_SLV	0	SLV 10	No
R_SLV	0	SLV 10	No

Maschio 145

Verifiche condotte secondo D.M. 17-01-18 (N.T.C.)

Dati geometrici

X ini.	Y ini.	X fin.	Y fin.	Quota i.	Quota.s	l	Sp.	h netta	h ini.	h fin.	a	a.s.,sx	a.s.,dx
-9.448	-3.169	-11.003	-3.169	L4	L5	1.555	0.28	3.55	3.55	3.55			

Caratteristiche del materiale

(Circolare 7 21-01-19 C8.5.I) Muratura in mattoni pieni e malta di calce LC2_Corti

fb	fk	fvk0	fmedio	τ0	fv0	μ	ϕ	fv,lim	E	G	FC
600000			345000	9000	20000	0.58	0.77	32500	320000000	128000000	1.2

Verifica a pressoflessione nel piano secondo D.M. 17-01-18 NTC §7.8.2.2.1 in combinazioni non sismiche, γM = 3

Comb.	Quota	N	M	σ0	Mu	c.s.	Verifica
SLU 82	5	-13140	2582.39	30182	6430.58	2.49	Si
SLU 82	7.1	-16512	-2302.81	37926	6860.18	2.979	Si
SLU 31	5	-10190	2183.93	23406	5645.86	2.585	Si
SLU 31	7.1	-13148	-1901.77	30200	6432.21	3.382	Si
SLU 84	5	-13403	2538.61	30785	6481.9	2.553	Si
SLU 84	7.1	-16689	-2249.14	38333	6868.98	3.054	Si
SLU 40	5	-10692	2257.54	24560	5806.47	2.572	Si
SLU 40	7.1	-13891	-2026.33	31906	6569.38	3.242	Si
SLU 76	5	-12900	2464.99	29630	6380.99	2.589	Si
SLU 76	7.1	-15946	-2124.58	36627	6822.92	3.211	Si
SLU 73	5	-12638	2508.78	29028	6323.89	2.521	Si
SLU 73	7.1	-15769	-2178.25	36220	6808.35	3.126	Si
SLU 42	5	-10955	2213.76	25163	5885.95	2.659	Si
SLU 42	7.1	-14068	-1972.67	32314	6598.56	3.345	Si
SLU 75	5	-13149	2429.48	30202	6432.38	2.648	Si
SLU 75	7.1	-16173	-2140.86	37148	6839.55	3.195	Si
SLU 81	5	-13358	2488.17	30682	6473.4	2.602	Si
SLU 81	7.1	-16607	-2272.44	38145	6865.08	3.021	Si
SLU 83	5	-13620	2444.39	31285	6522.22	2.668	Si
SLU 83	7.1	-16784	-2218.78	38552	6873.14	3.098	Si

Verifica a pressoflessione nel piano secondo D.M. 17-01-18 NTC §7.8.2.2.1 in combinazioni sismiche, γM = 2

Comb.	Quota	N	M	σ0	Mu	c.s.	Verifica
SLV 3	5	-4728	5504.93	0	0	0	No, e>l/2
SLV 3	7.1	-13110	-4848.15	30112	7680.39	1.584	Si
SLV 15	5	-11236	-1986.25	25808	6890.22	3.469	Si
SLV 15	7.1	-6911	2299.86	15874	4675	2.033	Si
SLV 14	5	-14147	-2323.08	32495	8073.58	3.475	Si
SLV 14	7.1	-9250	2022.98	21246	5940.68	2.937	Si
SLV 7	5	-3609	3275.99	0	0	0	No, e>l/2
SLV 7	7.1	-8212	-2023.31	18863	5398.92	2.668	Si
SLV 1	5	-7639	5168.09	17547	5086.17	0.984	No, M>Mu
SLV 1	7.1	-15448	-5125.03	35484	8522.39	1.663	Si
SLV 4	5	-4728	5504.93	0	0	0	No, e>l/2
SLV 4	7.1	-13110	-4848.15	30112	7680.39	1.584	Si
SLV 16	5	-11236	-1986.25	25808	6890.22	3.469	Si
SLV 16	7.1	-6911	2299.86	15874	4675	2.033	Si
SLV 8	5	-3609	3275.99	0	0	0	No, e>l/2
SLV 8	7.1	-8212	-2023.31	18863	5398.92	2.668	Si
SLV 2	5	-7639	5168.09	17547	5086.17	0.984	No, M>Mu
SLV 2	7.1	-15448	-5125.03	35484	8522.39	1.663	Si
SLV 13	5	-14147	-2323.08	32495	8073.58	3.475	Si
SLV 13	7.1	-9250	2022.98	21246	5940.68	2.937	Si

Verifica a taglio nel piano secondo D.M. 17-01-18 (N.T.C.) §7.8.2.2.2 con rottura per scorrimento in combinazioni non sismiche, γM = 3

Comb.	Quota	N	V par	M	σ0	σN	I'	fvd	Vt scorr.	Vt fess.diag.	Vt,lim	c.s.	Verifica
SLU 40	5	-10692	3565	2257.54		24560	1.5549	8830	3844			1.08	Si
SLU 40	7.1	-13891	3743	-2026.33		31906	1.5549	9810	4271			1.14	Si
SLU 42	5	-10955	3488	2213.76		25163	1.5549	8911	3879			1.11	Si
SLU 42	7.1	-14068	3658	-1972.67		32314	1.5549	9864	4294			1.17	Si
SLU 31	5	-10190	3429	2183.93		23406	1.5549	8676	3777			1.1	Si
SLU 31	7.1	-13148	3601	-1901.77		30200	1.5549	9582	4172			1.16	Si
SLU 75	5	-13149	3849	2429.48		30202	1.5549	9583	4172			1.08	Si
SLU 75	7.1	-16173	4031	-2140.86		37148	1.5549	10509	4575			1.13	Si
SLU 73	5	-12638	3944	2508.78		29028	1.5549	9426	4104			1.04	Si
SLU 73	7.1	-15769	4138	-2178.25		36220	1.5549	10385	4521			1.09	Si
SLU 76	5	-12900	3867	2464.99		29630	1.5549	9506	4139			1.07	Si
SLU 76	7.1	-15946	4053	-2124.58		36627	1.5549	10439	4545			1.12	Si
SLU 82	5	-13140	4080	2582.39		30182	1.5549	9580	4171			1.02	Si
SLU 82	7.1	-16512	4280	-2302.81		37926	1.5549	10612	4620			1.08	Si
SLU 84	5	-13403	4003	2538.61		30785	1.5549	9660	4206			1.05	Si
SLU 84	7.1	-16689	4195	-2249.14		38333	1.5549	10667	4644			1.11	Si
SLU 83	5	-13620	3898	2444.39		31285	1.5549	9727	4235			1.09	Si
SLU 83	7.1	-16784	4078	-2218.78		38552	1.5549	10696	4657			1.14	Si
SLU 81	5	-13358	3975	2488.17		30682	1.5549	9647	4200			1.06	Si
SLU 81	7.1	-16607	4163	-2272.44		38145	1.5549	10642	4633			1.11	Si

Verifica a taglio nel piano secondo D.M. 17-01-18 (N.T.C.) §7.8.2.2.2 con rottura per scorrimento in combinazioni sismiche, γM = 2

Comb.	Quota	N	V par	M	σ0	σN	I'	fvd	Vt scorr.	Vt fess.diag.	Vt,lim	c.s.	Verifica
SLV 2	5	-7639	9202	5168.09		90114	0.3028	16250	1378			0.15	No, Vu<V
SLV 2	7.1	-15448	8288	-5125.03		41264	1.3371	16250	6084			0.73	No, Vu<V
SLV 5	5	-13313	5943	2153.21		30580	1.5549	14449	6291			1.06	Si
SLV 5	7.1	-16007	5429	-2946.25		36767	1.5549	15687	6829			1.26	Si
SLV 4	5	-4728	8285	5504.93		0	0	8333	0			0	No, Vu<V
SLV 4	7.1	-13110	7580	-4848.15		38287	1.2229	15991	5475			0.72	No, Vu<V
SLV 16	5	-11236	-4086	-1986.25		25808	1.5549	13495	5875			1.44	Si
SLV 16	7.1	-6911	-2944	2299.86		18503	1.334	12034	4495			1.53	Si
SLV 6	5	-13313	5943	2153.21		30580	1.5549	14449	6291			1.06	Si
SLV 6	7.1	-16007	5429	-2946.25		36767	1.5549	15687	6829			1.26	Si
SLV 8	5	-3609	2884	3275.99		0	0	8333	0			0	No, Vu<V
SLV 8	7.1	-8212	3072	-2023.31		18863	1.5549	12106	5271			1.72	Si
SLV 3	5	-4728	8285	5504.93		0	0	8333	0			0	No, Vu<V
SLV 3	7.1	-13110	7580	-4848.15		38287	1.2229	15991	5475			0.72	No, Vu<V
SLV 15	5	-11236	-4086	-1986.25		25808	1.5549	13495	5875			1.44	Si
SLV 15	7.1	-6911	-2944	2299.86		18503	1.334	12034	4495			1.53	Si
SLV 7	5	-3609	2884	3275.99		0	0	8333	0			0	No, Vu<V
SLV 7	7.1	-8212	3072	-2023.31		18863	1.5549	12106	5271			1.72	Si
SLV 1	5	-7639	9202	5168.09		90114	0.3028	16250	1378			0.15	No, Vu<V

Comb.	Quota	N	V par	M	σ0	σN	I'	fvd	Vt scorr.	Vt fess.diag.	Vt,lim	c.s.	Verifica
SLV 1	7.1	-15448	8288	-5125.03		41264	1.3371	16250	6084			0.73	No, Vu<V

Verifica a pressoflessione fuori piano D.M. 17-01-18 (N.T.C.)

quota 6.775 Wa 0.05 denominatore 8 γM = 2

Comb.	fd	Sa	σ0	N	M	Mc	Coeff.s.	Verifica
SLV 11	143750	0.39	15155	-6598	162.37	809.15	4.98	Si
SLV 12	143750	0.39	15155	-6598	162.37	809.15	4.98	Si
SLV 16	143750	0.39	16487	-7178	162.37	869.3	5.35	Si
SLV 15	143750	0.39	16487	-7178	162.37	869.3	5.35	Si
SLV 8	143750	0.39	19429	-8459	162.37	995.93	6.13	Si
SLV 7	143750	0.39	19429	-8459	162.37	995.93	6.13	Si
SLV 14	143750	0.39	21903	-9536	162.37	1095.69	6.75	Si
SLV 13	143750	0.39	21903	-9536	162.37	1095.69	6.75	Si
SLV 4	143750	0.39	30734	-13381	162.37	1402.1	8.64	Si
SLV 3	143750	0.39	30734	-13381	162.37	1402.1	8.64	Si

Verifica dei meccanismi locali di collasso con analisi cinematica lineare

forza di aggancio al piano = 0 quota mezzeria = 6.775 Wa = 0.05 Ta = 0.0752

Comb.	N top	N base	V orto	α0	M*	e*	a0*	aLim	Verifica
SLV 7	-5277	-3609	-289	0.004	758.9	0.924	0.06852	8.10374	No
SLV 8	-5277	-3609	-289	0.004	758.9	0.924	0.06852	8.10374	No
SLV 12	-6134	-5562	-239	0.015	845.2	0.93	0.23309	8.10374	No
SLV 11	-6134	-5562	-239	0.015	845.2	0.93	0.23309	8.10374	No
SLV 10	-10844	-15266	290	0.02	1322.3	0.952	0.30898	8.10374	No
SLV 9	-10844	-15266	290	0.02	1322.3	0.952	0.30898	8.10374	No
SLV 3	-5926	-4728	-161	0.025	824.3	0.929	0.3897	9.20386	No
SLV 4	-5926	-4728	-161	0.025	824.3	0.929	0.3897	9.20386	No
SLV 6	-9987	-13313	240	0.023	1235.4	0.949	0.35431	8.10374	No
SLV 5	-9987	-13313	240	0.023	1235.4	0.949	0.35431	8.10374	No

Tabella dei coefficienti di sicurezza minimi

Stato limite	Coeff.s.	Comb.	Verifica
PF_SLU	2.49	SLU 82	Si
V_SLU	1.022	SLU 82	Si
PF_SLV	0	SLV 3	No
V_SLV	0	SLV 3	No
PFFP_SLV	4.983	SLV 11	Si
R_SLV	0.008	SLV 7	No

Maschio 146

Verifiche condotte secondo D.M. 17-01-18 (N.T.C.)

Dati geometrici

X ini.	Y ini.	X fin.	Y fin.	Quota i.	Quota.s	l	Sp.	h netta	h ini.	h fin.	a	a.s.,sx	a.s.,dx
-7.763	-4.697	-7.763	-4.403	L4	L5	0.293	0.28	3.55	3.55	3.55			

Caratteristiche del materiale

(Circolare 7 21-01-19 C8.5.I) Muratura in mattoni pieni e malta di calce LC2_Corti

fb	fk	fvk0	fmedio	τ0	fv0	μ	ϕ	fv,lim	E	G	FC
600000			345000	9000	20000	0.58	0.77	32500	320000000	128000000	1.2

Verifica a pressoflessione nel piano secondo D.M. 17-01-18 NTC §7.8.2.2.1 in combinazioni non sismiche, γM = 3

Comb.	Quota	N	M	σ0	Mu	c.s.	Verifica
SLU 76	5	-3708	-5.31	45124	242.66	45.67	Si
SLU 76	8.11	-2298	-128.38	27967	221.41	1.725	Si
SLU 80	5	-3617	-31.48	44017	243.92	7.749	Si
SLU 80	8.11	-2347	-123.04	28568	223.63	1.817	Si
SLU 73	5	-3585	-11.57	43626	244.28	21.122	Si
SLU 73	8.11	-2212	-124.32	26922	217.3	1.748	Si
SLU 68	5	-3510	7.82	42722	244.93	31.335	Si
SLU 68	8.11	-2161	-121.75	26294	214.68	1.763	Si
SLU 47	5	-3306	16.39	40231	245.48	14.976	Si
SLU 47	8.11	-2009	-114.36	24445	206.27	1.804	Si
SLU 52	5	-3380	-2.99	41134	245.49	82.115	Si
SLU 52	8.11	-2060	-116.93	25073	209.24	1.789	Si
SLU 55	5	-3503	3.26	42632	244.98	75.096	Si
SLU 55	8.11	-2146	-120.99	26119	213.92	1.768	Si
SLU 78	5	-3597	-34.6	43781	244.14	7.055	Si
SLU 78	8.11	-2341	-122.75	28491	223.35	1.82	Si
SLU 34	5	-3151	8.79	38345	244.68	27.844	Si
SLU 34	8.11	-1915	-110.29	23311	200.62	1.819	Si
SLU 65	5	-3387	1.56	41224	245.48	156.895	Si
SLU 65	8.11	-2075	-117.69	25249	210.05	1.785	Si

Verifica a pressoflessione nel piano secondo D.M. 17-01-18 NTC §7.8.2.2.1 in combinazioni sismiche, γM = 2

Comb.	Quota	N	M	σ0	Mu	c.s.	Verifica
SLV 7	5	-5893	634.32	71717	357.14	0.563	No, M>Mu
SLV 7	8.11	-819	-36.28	9963	110.32	3.041	Si
SLV 11	5	-7285	705.78	88655	293.33	0.416	No, M>Mu
SLV 11	8.11	-692	-37.97	8425	94.57	2.491	Si
SLV 1	5	1429	-402.02	0	0	0	No, Trazione
SLV 1	8.11	-1975	-80.6	24036	232.78	2.888	Si
SLV 8	5	-5893	634.32	71717	357.14	0.563	No, M>Mu
SLV 8	8.11	-819	-36.28	9963	110.32	3.041	Si

Comb.	Quota	N	M	σ0	Mu	c.s.	Verifica
SLV 9	5	1482	-760.33	0	0	0	No, Trazione
SLV 9	8.11	-2244	-109.2	27315	255.69	2.341	Si
SLV 2	5	1429	-402.02	0	0	0	No, Trazione
SLV 2	8.11	-1975	-80.6	24036	232.78	2.888	Si
SLV 5	5	2874	-831.78	0	0	0	No, Trazione
SLV 5	8.11	-2371	-107.51	28853	265.71	2.472	Si
SLV 6	5	2874	-831.78	0	0	0	No, Trazione
SLV 6	8.11	-2371	-107.51	28853	265.71	2.472	Si
SLV 10	5	1482	-760.33	0	0	0	No, Trazione
SLV 10	8.11	-2244	-109.2	27315	255.69	2.341	Si
SLV 12	5	-7285	705.78	88655	293.33	0.416	No, M>Mu
SLV 12	8.11	-692	-37.97	8425	94.57	2.491	Si

Verifica a taglio nel piano secondo D.M. 17-01-18 (N.T.C.) §7.8.2.2.2 con rottura per scorrimento in combinazioni non sismiche, γM = 3

Comb.	Quota	N	V par	M	σ0	σN	I'	fvd	Vt scorr.	Vt fess.diag.	Vt,lim	c.s.	Verifica
SLU 62	5	-3052	-103	-83.41		37150	0.2935	10509	863			8.4	Si
SLU 62	8.11	-2114	279	-100.35		25724	0.2935	8985	738			2.65	Si
SLU 83	5	-3257	-112	-91.98		39641	0.2935	10833	890			7.94	Si
SLU 83	8.11	-2266	311	-107.74		27573	0.2935	9232	759			2.44	Si
SLU 81	5	-3134	-118	-98.24		38143	0.2935	10641	874			7.38	Si
SLU 81	8.11	-2180	328	-103.68		26528	0.2935	9093	747			2.28	Si
SLU 39	5	-2577	-100	-84.14		31365	0.2935	9738	800			8.02	Si
SLU 39	8.11	-1797	283	-85.59		21872	0.2935	8472	696			2.46	Si
SLU 60	5	-2929	-109	-89.66		35652	0.2935	10309	847			7.76	Si
SLU 60	8.11	-2028	296	-96.29		24679	0.2935	8846	727			2.46	Si
SLU 77	5	-3276	-104	-83.23		39874	0.2935	10833	890			8.55	Si
SLU 77	8.11	-2286	286	-108.66		27824	0.2935	9265	761			2.67	Si
SLU 74	5	-3153	-111	-89.48		38376	0.2935	10672	877			7.94	Si
SLU 74	8.11	-2200	302	-104.6		26779	0.2935	9126	750			2.48	Si
SLU 82	5	-3455	-52	-49.61		42050	0.2935	10833	890			17.24	Si
SLU 82	8.11	-2234	289	-117.77		28292	0.2821	9328	737			2.55	Si
SLU 18	5	-2372	-90	-75.56		28873	0.2935	9405	773			8.54	Si
SLU 18	8.11	-1645	251	-78.2		20023	0.2935	8225	676			2.7	Si
SLU 41	5	-2700	-93	-77.88		32863	0.2935	9937	817			8.75	Si
SLU 41	8.11	-1883	266	-89.65		22917	0.2935	8611	708			2.66	Si

Verifica a taglio nel piano secondo D.M. 17-01-18 (N.T.C.) §7.8.2.2.2 con rottura per scorrimento in combinazioni sismiche, γM = 2

Comb.	Quota	N	V par	M	σ0	σN	I'	fvd	Vt scorr.	Vt fess.diag.	Vt,lim	c.s.	Verifica
SLV 10	5	1482	-935	-760.33		0	0	8333	0			0	No, Vu<V
SLV 10	8.11	-2244	1393	-109.2		27315	0.2935	13796	1134			0.81	No, Vu<V
SLV 12	5	-7285	920	705.78		173999	0.1495	16250	680			0.74	No, Vu<V
SLV 12	8.11	-692	-1225	-37.97		8970	0.2756	10127	782			0.64	No, Vu<V
SLV 2	5	1429	-597	-402.02		0	0	8333	0			0	No, Vu<V
SLV 2	8.11	-1975	1017	-80.6		24036	0.2935	13141	1080			1.06	Si
SLV 1	5	1429	-597	-402.02		0	0	8333	0			0	No, Vu<V
SLV 1	8.11	-1975	1017	-80.6		24036	0.2935	13141	1080			1.06	Si
SLV 6	5	2874	-1079	-831.78		0	0	8333	0			0	No, Vu<V
SLV 6	8.11	-2371	1643	-107.51		28853	0.2935	14104	1159			0.71	No, Vu<V
SLV 7	5	-5893	776	634.32		179493	0.1173	16250	533			0.69	No, Vu<V
SLV 7	8.11	-819	-976	-36.28		9963	0.2935	10326	848			0.87	No, Vu<V
SLV 8	5	-5893	776	634.32		179493	0.1173	16250	533			0.69	No, Vu<V
SLV 8	8.11	-819	-976	-36.28		9963	0.2935	10326	848			0.87	No, Vu<V
SLV 9	5	1482	-935	-760.33		0	0	8333	0			0	No, Vu<V
SLV 9	8.11	-2244	1393	-109.2		27315	0.2935	13796	1134			0.81	No, Vu<V
SLV 5	5	2874	-1079	-831.78		0	0	8333	0			0	No, Vu<V
SLV 5	8.11	-2371	1643	-107.51		28853	0.2935	14104	1159			0.71	No, Vu<V
SLV 11	5	-7285	920	705.78		173999	0.1495	16250	680			0.74	No, Vu<V
SLV 11	8.11	-692	-1225	-37.97		8970	0.2756	10127	782			0.64	No, Vu<V

Verifica a pressoflessione fuori piano D.M. 17-01-18 (N.T.C.)

quota 6.775 Wa 0.05 denominatore 8 γM = 2

Comb.	fd	Sa	σ0	N	M	Mc	Coeff.s.	Verifica
SLV 11	143750	0.39	22216	-1825	31.36	209.09	6.67	Si
SLV 12	143750	0.39	22216	-1825	31.36	209.09	6.67	Si
SLV 8	143750	0.39	22865	-1879	31.36	213.81	6.82	Si
SLV 7	143750	0.39	22865	-1879	31.36	213.81	6.82	Si
SLV 16	143750	0.39	26072	-2142	31.36	235.92	7.52	Si
SLV 15	143750	0.39	26072	-2142	31.36	235.92	7.52	Si
SLV 3	143750	0.39	28236	-2320	31.36	249.75	7.96	Si
SLV 4	143750	0.39	28236	-2320	31.36	249.75	7.96	Si
SLV 14	143750	0.39	30027	-2467	31.36	260.53	8.31	Si
SLV 13	143750	0.39	30027	-2467	31.36	260.53	8.31	Si

Verifica dei meccanismi locali di collasso con analisi cinematica lineare

forza di aggancio al piano = 0 quota mezzeria = 6.775 Wa = 0.05 Ta = 0.0752

Comb.	N top	N base	V orto	α0	M*	e*	a0*	aLim	Verifica
SLV 7	-1396	-5893	-85	0	183.6	0.938	0	8.10374	No
SLV 10	-1580	1482	83	0	0	0	0	8.10374	No, Trazione
SLV 2	-677	1429	27	0	0	0	0	9.20386	No, Trazione
SLV 9	-1580	1482	83	0	0	0	0	8.10374	No, Trazione
SLV 1	-677	1429	27	0	0	0	0	9.20386	No, Trazione
SLV 6	-1118	2874	85	0	0	0	0	8.10374	No, Trazione
SLV 5	-1118	2874	85	0	0	0	0	8.10374	No, Trazione
SLV 8	-1396	-5893	-85	0	183.6	0.938	0	8.10374	No
SLV 11	-1858	-7285	-86	0.004	230.4	0.949	0.05469	8.10374	No
SLV 12	-1858	-7285	-86	0.004	230.4	0.949	0.05469	8.10374	No

Tabella dei coefficienti di sicurezza minimi

Stato limite	Coeff.s.	Comb.	Verifica

Stato limite	Coeff.s.	Comb.	Verifica
PF_SLU	1.725	SLU 76	Si
V_SLU	2.279	SLU 81	Si
PF_SLV	0	SLV 10	No
V_SLV	0	SLV 1	No
PFFP_SLV	6.668	SLV 11	Si
R_SLV	0	SLV 10	No

Maschio 147

Verifiche condotte secondo D.M. 17-01-18 (N.T.C.)

Dati geometrici

X ini.	Y ini.	X fin.	Y fin.	Quota i.	Quota.s	l	Sp.	h netta	h ini.	h fin.	a	a.s.,sx	a.s.,dx
-7.763	-3.313	-7.763	-3.169	L4	L5	0.144	0.28	3.55	3.55	3.55			

Caratteristiche del materiale

(Circolare 7 21-01-19 C8.5.I) Muratura in mattoni pieni e malta di calce LC2_Corti

fb	fk	fvk0	fmedio	τ0	fv0	μ	ϕ	fv,lim	E	G	FC
600000			345000	9000	20000	0.58	0.77	32500	320000000	128000000	1.2

Verifica a pressoflessione nel piano secondo D.M. 17-01-18 NTC §7.8.2.2.1 in combinazioni non sismiche, γM = 3

Comb.	Quota	N	M	σ0	Mu	c.s.	Verifica
SLU 77	5	-1544	-27.83	38206	59.19	2.127	Si
SLU 77	8.11	-640	2.26	15838	37.22	16.491	Si
SLU 83	5	-1603	-30.3	39647	59.37	1.959	Si
SLU 83	8.11	-648	2.67	16029	37.56	14.045	Si
SLU 81	5	-1616	-31.48	39982	59.39	1.887	Si
SLU 81	8.11	-637	2.82	15767	37.1	13.161	Si
SLU 62	5	-1469	-27.09	36346	58.73	2.168	Si
SLU 62	8.11	-591	2.25	14625	35.01	15.585	Si
SLU 26	5	-514	15.23	12726	31.33	2.057	Si
SLU 26	8.11	-497	-0.22	12293	30.45	138.066	Si
SLU 39	5	-1365	-27.35	33758	57.67	2.109	Si
SLU 39	8.11	-540	2.65	13355	32.58	12.278	Si
SLU 2	5	-394	17.27	9759	25.06	1.451	Si
SLU 2	8.11	-430	-0.5	10627	26.96	53.405	Si
SLU 60	5	-1483	-28.26	36681	58.83	2.081	Si
SLU 60	8.11	-581	2.39	14362	34.52	14.44	Si
SLU 5	5	-381	18.44	9425	24.32	1.319	Si
SLU 5	8.11	-440	-0.65	10889	27.52	42.417	Si
SLU 74	5	-1558	-29.01	38541	59.24	2.042	Si
SLU 74	8.11	-630	2.4	15576	36.75	15.306	Si

Verifica a pressoflessione nel piano secondo D.M. 17-01-18 NTC §7.8.2.2.1 in combinazioni sismiche, γM = 2

Comb.	Quota	N	M	σ0	Mu	c.s.	Verifica
SLV 2	5	-3061	-164.22	75732	84.01	0.512	No, M>Mu
SLV 2	8.11	-377	42.66	0	0	0	No, e>l/2
SLV 1	5	-3061	-164.22	75732	84.01	0.512	No, M>Mu
SLV 1	8.11	-377	42.66	0	0	0	No, e>l/2
SLV 8	5	3735	220.98	0	0	0	No, Trazione
SLV 8	8.11	-1059	-52.72	26189	60.03	1.139	Si
SLV 7	5	3735	220.98	0	0	0	No, Trazione
SLV 7	8.11	-1059	-52.72	26189	60.03	1.139	Si
SLV 9	5	-5889	-260.35	145696	0	0	No, Rottura per schiacciamento
SLV 9	8.11	209	55.52	0	0	0	No, Trazione
SLV 6	5	-6187	-300.17	153054	0	0	No, Rottura per schiacciamento
SLV 6	8.11	131	69.3	0	0	0	No, Trazione
SLV 10	5	-5889	-260.35	145696	0	0	No, Rottura per schiacciamento
SLV 10	8.11	209	55.52	0	0	0	No, Trazione
SLV 3	5	-85	-7.88	0	0	0	No, e>l/2
SLV 3	8.11	-734	6.05	18160	45.11	7.453	Si
SLV 5	5	-6187	-300.17	153054	0	0	No, Rottura per schiacciamento
SLV 5	8.11	131	69.3	0	0	0	No, Trazione
SLV 4	5	-85	-7.88	0	0	0	No, e>l/2
SLV 4	8.11	-734	6.05	18160	45.11	7.453	Si

Verifica a taglio nel piano secondo D.M. 17-01-18 (N.T.C.) §7.8.2.2.2 con rottura per scorrimento in combinazioni non sismiche, γM = 3

Comb.	Quota	N	V par	M	σ0	σN	l'	fvd	Vt scorr.	Vt fess.diag.	Vt,lim	c.s.	Verifica
SLU 74	5	-1558	-49	-29.01		38541	0.1444	10694	432			8.78	Si
SLU 74	8.11	-630	77	2.4		15576	0.1444	7632	309			4.02	Si
SLU 62	5	-1469	-46	-27.09		36346	0.1444	10402	420			9.14	Si
SLU 62	8.11	-591	72	2.25		14625	0.1444	7506	303			4.21	Si
SLU 60	5	-1483	-48	-28.26		36681	0.1444	10446	422			8.77	Si
SLU 60	8.11	-581	77	2.39		14362	0.1444	7471	302			3.92	Si
SLU 5	5	-381	73	18.44		19078	0.0713	8099	162			2.22	Si
SLU 5	8.11	-440	3	-0.65		10889	0.1444	7007	283			87.04	Si
SLU 83	5	-1603	-52	-30.3		39647	0.1444	10833	438			8.49	Si
SLU 83	8.11	-648	78	2.67		16029	0.1444	7693	311			3.97	Si
SLU 53	5	-1424	-44	-25.79		35240	0.1444	10254	414			9.49	Si
SLU 53	8.11	-573	70	1.97		14171	0.1444	7445	301			4.27	Si
SLU 2	5	-394	71	17.27		16530	0.0852	7760	185			2.62	Si
SLU 2	8.11	-430	8	-0.5		10627	0.1444	6972	282			34.63	Si
SLU 81	5	-1616	-54	-31.48		39982	0.1444	10833	438			8.15	Si

Comb.	Quota	N	V par	M	σ0	σN	l'	fvd	Vt scorr.	Vt fess.diag.	Vt,lim	c.s.	Verifica
SLU 81	8.11	-637	83	2.82		15767	0.1444	7658	310			3.72	Si
SLU 26	5	-514	67	15.23		14384	0.1277	7473	267			3.98	Si
SLU 26	8.11	-497	10	-0.22		12293	0.1444	7195	291			30.46	Si
SLU 39	5	-1365	-47	-27.35		33758	0.1444	10057	406			8.68	Si
SLU 39	8.11	-540	71	2.65		13355	0.1444	7336	297			4.2	Si

Verifica a taglio nel piano secondo D.M. 17-01-18 (N.T.C.) §7.8.2.2.2 con rottura per scorrimento in combinazioni sismiche, γM = 2

Comb.	Quota	N	V par	M	σ0	σN	l'	fvd	Vt scorr.	Vt fess.diag.	Vt,lim	c.s.	Verifica
SLV 1	5	-3061	-133	-164.22		196641	0.0556	16250	253			1.9	Si
SLV 1	8.11	-377	313	42.66		0	0	8333	0			0	No, Vu<V
SLV 2	5	-3061	-133	-164.22		196641	0.0556	16250	253			1.9	Si
SLV 2	8.11	-377	313	42.66		0	0	8333	0			0	No, Vu<V
SLV 6	5	-6187	-728	-300.17		311285	0.071	16250	323			0.44	No, Vu<V
SLV 6	8.11	131	728	69.3		0	0	8333	0			0	No, Vu<V
SLV 4	5	-85	305	-7.88		0	0	8333	0			0	No, Vu<V
SLV 4	8.11	-734	-80	6.05		18160	0.1444	11965	484			6.03	Si
SLV 3	5	-85	305	-7.88		0	0	8333	0			0	No, Vu<V
SLV 3	8.11	-734	-80	6.05		18160	0.1444	11965	484			6.03	Si
SLV 5	5	-6187	-728	-300.17		311285	0.071	16250	323			0.44	No, Vu<V
SLV 5	8.11	131	728	69.3		0	0	8333	0			0	No, Vu<V
SLV 10	5	-5889	-800	-260.35		250651	0.0839	16250	382			0.48	No, Vu<V
SLV 10	8.11	209	691	55.52		0	0	8333	0			0	No, Vu<V
SLV 8	5	3735	733	220.98		0	0	8333	0			0	No, Vu<V
SLV 8	8.11	-1059	-582	-52.72		56323	0.0671	16250	305			0.52	No, Vu<V
SLV 9	5	-5889	-800	-260.35		250651	0.0839	16250	382			0.48	No, Vu<V
SLV 9	8.11	209	691	55.52		0	0	8333	0			0	No, Vu<V
SLV 7	5	3735	733	220.98		0	0	8333	0			0	No, Vu<V
SLV 7	8.11	-1059	-582	-52.72		56323	0.0671	16250	305			0.52	No, Vu<V

Verifica a pressoflessione fuori piano D.M. 17-01-18 (N.T.C.)

quota 6.775 Wa 0.05 denominatore 8 γM = 2

Comb.	fd	Sa	σ0	N	M	Mc	Coeff.s.	Verifica
SLV 5	143750	0.39	0	-88	15.43	0	0	No, e>t/2
SLV 6	143750	0.39	0	-88	15.43	0	0	No, e>t/2
SLV 10	143750	0.39	6859	-277	15.43	36.64	2.38	Si
SLV 9	143750	0.39	6859	-277	15.43	36.64	2.38	Si
SLV 2	143750	0.39	7639	-309	15.43	40.53	2.63	Si
SLV 1	143750	0.39	7639	-309	15.43	40.53	2.63	Si
SLV 3	143750	0.39	16994	-687	15.43	82.79	5.37	Si
SLV 4	143750	0.39	16994	-687	15.43	82.79	5.37	Si
SLV 13	143750	0.39	23230	-939	15.43	106.46	6.9	Si
SLV 14	143750	0.39	23230	-939	15.43	106.46	6.9	Si

Verifica dei meccanismi locali di collasso con analisi cinematica lineare

forza di aggancio al piano = 0 quota mezzeria = 6.775 Wa = 0.05 Ta = 0.0752

Comb.	N top	N base	V orto	α0	M*	e*	a0*	aLim	Verifica
SLV 16	-195	907	-1	0	0	0	0	9.20386	No, Trazione
SLV 12	379	4032	13	0	0	0	0	8.10374	No, Trazione
SLV 8	373	3735	16	0	0	0	0	8.10374	No, Trazione
SLV 15	-195	907	-1	0	0	0	0	9.20386	No, Trazione
SLV 7	373	3735	16	0	0	0	0	8.10374	No, Trazione
SLV 11	379	4032	13	0	0	0	0	8.10374	No, Trazione
SLV 3	-218	-85	9	0.028	43.5	0.895	0.46035	9.20386	No
SLV 4	-218	-85	9	0.028	43.5	0.895	0.46035	9.20386	No
SLV 14	-694	-2070	-9	0.034	91.1	0.938	0.52992	9.20386	No
SLV 13	-694	-2070	-9	0.034	91.1	0.938	0.52992	9.20386	No

Tabella dei coefficienti di sicurezza minimi

Stato limite	Coeff.s.	Comb.	Verifica
PF_SLU	1.319	SLU 5	Si
V_SLU	2.223	SLU 5	Si
PF_SLV	0	SLV 16	No
V_SLV	0	SLV 1	No
PFFP_SLV	0	SLV 5	No
R_SLV	0	SLV 16	No

Maschio 148

Verifiche condotte secondo D.M. 17-01-18 (N.T.C.)

Dati geometrici

X ini.	Y ini.	X fin.	Y fin.	Quota i.	Quota.s	l	Sp.	h netta	h ini.	h fin.	a	a.s.,sx	a.s.,dx
-6.268	-3.169	-6.268	1.141	L4	L5	4.31	0.14	3.55	3.55	3.55			

Caratteristiche del materiale

(Circolare 7 21-01-19 C8.5.I) Muratura in mattoni pieni e malta di calce LC2_Corti

fb	fk	fvk0	fmedio	τ0	fv0	μ	ϕ	fv,lim	E	G	FC
600000			345000	9000	20000	0.58	0.77	32500	320000000	128000000	1.2

Verifica a pressoflessione nel piano secondo D.M. 17-01-18 NTC §7.8.2.2.1 in combinazioni non sismiche, γM = 3

Comb.	Quota	N	M	σ0	Mu	c.s.	Verifica
SLU 81	5	-43100	11433.62	71429	11435.81	1	Si
SLU 81	8.55	-21535	3187.26	35690	26075.07	8.181	Si
SLU 84	5	-43930	12240.52	72804	10058.2	0.822	No, M>Mu
SLU 84	8.55	-22097	3907.38	36621	26211.04	6.708	Si

Comb.	Quota	N	M	σ0	Mu	c.s.	Verifica
SLU 76	5	-42084	11885.33	69746	13040.47	1.097	Si
SLU 76	8.55	-21174	3993.27	35091	25973.14	6.504	Si
SLU 79	5	-42692	11698.79	70752	12091.84	1.034	Si
SLU 79	8.55	-21826	3827.23	36172	26149.03	6.832	Si
SLU 83	5	-43846	11867.99	72666	10199.29	0.859	No, M>Mu
SLU 83	8.55	-22131	3575.07	36677	26218.36	7.334	Si
SLU 75	5	-42463	11731.18	70374	12452.25	1.061	Si
SLU 75	8.55	-21533	3796.87	35686	26074.52	6.867	Si
SLU 80	5	-42775	12071.33	70890	11959.19	0.991	No, M>Mu
SLU 80	8.55	-21792	4159.54	36116	26140.81	6.285	Si
SLU 82	5	-43183	11806.16	71567	11300.17	0.957	No, M>Mu
SLU 82	8.55	-21501	3519.57	35633	26065.99	7.406	Si
SLU 78	5	-43210	12165.54	71610	11257.39	0.925	No, M>Mu
SLU 78	8.55	-22129	4184.68	36673	26217.92	6.265	Si
SLU 77	5	-43126	11793.01	71472	11393.22	0.966	No, M>Mu
SLU 77	8.55	-22163	3852.37	36729	26225.14	6.808	Si

Verifica a pressoflessione nel piano secondo D.M. 17-01-18 NTC §7.8.2.2.1 in combinazioni sismiche, γM = 2

Comb.	Quota	N	M	σ0	Mu	c.s.	Verifica
SLV 5	5	-33225	8831.61	55062	39333.63	4.454	Si
SLV 5	8.55	-15024	3930.83	24898	25778.52	6.558	Si
SLV 14	5	-33801	8213.79	56018	39446.62	4.802	Si
SLV 14	8.55	-18026	2049.25	29874	29348.52	14.322	Si
SLV 2	5	-26814	7428.56	44439	36768.83	4.95	Si
SLV 2	8.55	-11701	3143.94	19392	21213.48	6.747	Si
SLV 6	5	-33225	8831.61	55062	39333.63	4.454	Si
SLV 6	8.55	-15024	3930.83	24898	25778.52	6.558	Si
SLV 9	5	-35321	9067.18	58536	39651.15	4.373	Si
SLV 9	8.55	-16921	3602.42	28043	28096.02	7.799	Si
SLV 15	5	-30403	7246.75	50386	38500.66	5.313	Si
SLV 15	8.55	-17076	1046.36	28299	28275.42	27.023	Si
SLV 10	5	-35321	9067.18	58536	39651.15	4.373	Si
SLV 10	8.55	-16921	3602.42	28043	28096.02	7.799	Si
SLV 1	5	-26814	7428.56	44439	36768.83	4.95	Si
SLV 1	8.55	-11701	3143.94	19392	21213.48	6.747	Si
SLV 13	5	-33801	8213.79	56018	39446.62	4.802	Si
SLV 13	8.55	-18026	2049.25	29874	29348.52	14.322	Si
SLV 16	5	-30403	7246.75	50386	38500.66	5.313	Si
SLV 16	8.55	-17076	1046.36	28299	28275.42	27.023	Si

Verifica a taglio nel piano secondo D.M. 17-01-18 (N.T.C.) §7.8.2.2.2 con rottura per scorrimento in combinazioni non sismiche, γM = 3

Comb.	Quota	N	V par	M	σ0	σN	l'	fvd	Vt scorr.	Vt fess.diag.	Vt,lim	c.s.	Verifica
SLU 31	5	-34966	-2017	9979.24		57948	4.31	10833	6537			3.24	Si
SLU 31	8.55	-17357	-1353	3197.5		28766	4.31	9391	5666			4.19	Si
SLU 68	5	-37649	-2049	10477.03		62395	4.31	10833	6537			3.19	Si
SLU 68	8.55	-19074	-1388	3676.76		31611	4.31	9770	5895			4.25	Si
SLU 65	5	-36903	-1996	10042.67		61158	4.31	10833	6537			3.27	Si
SLU 65	8.55	-18478	-1337	3288.96		30624	4.31	9639	5816			4.35	Si
SLU 55	5	-37814	-2029	10464.66		62668	4.31	10833	6537			3.22	Si
SLU 55	8.55	-19039	-1368	3541.87		31553	4.31	9763	5891			4.31	Si
SLU 34	5	-35712	-2069	10413.6		59185	4.31	10833	6537			3.16	Si
SLU 34	8.55	-17953	-1404	3585.31		29753	4.31	9523	5746			4.09	Si
SLU 26	5	-31277	-2035	9005.3		51834	4.31	10833	6537			3.21	Si
SLU 26	8.55	-15853	-1376	3268.8		26272	4.31	9059	5466			3.97	Si
SLU 76	5	-42084	-2083	11885.33		69746	4.31	10833	6537			3.14	Si
SLU 76	8.55	-21174	-1415	3993.27		35091	4.31	10234	6175			4.36	Si
SLU 13	5	-31442	-2015	8992.93		52108	4.31	10833	6537			3.24	Si
SLU 13	8.55	-15818	-1356	3133.91		26214	4.31	9051	5461			4.03	Si
SLU 47	5	-33379	-1995	9056.37		55318	4.31	10833	6537			3.28	Si
SLU 47	8.55	-16939	-1340	3225.37		28072	4.31	9299	5611			4.19	Si
SLU 73	5	-41338	-2031	11450.97		68509	4.31	10833	6537			3.22	Si
SLU 73	8.55	-20578	-1364	3605.47		34104	4.31	10103	6096			4.47	Si

Verifica a taglio nel piano secondo D.M. 17-01-18 (N.T.C.) §7.8.2.2.2 con rottura per scorrimento in combinazioni sismiche, γM = 2

Comb.	Quota	N	V par	M	σ0	σN	l'	fvd	Vt scorr.	Vt fess.diag.	Vt,lim	c.s.	Verifica
SLV 10	5	-35321	-12023	9067.18		58536	4.31	16250	9805			0.82	No, Vu<V
SLV 10	8.55	-16921	-10457	3602.42		28043	4.31	13942	8413			0.8	No, Vu<V
SLV 7	5	-21897	11758	5608.14		36289	4.31	15591	9408			0.8	No, Vu<V
SLV 7	8.55	-11855	10227	587.89		19648	4.31	12263	7399			0.72	No, Vu<V
SLV 11	5	-23993	12204	5843.71		39763	4.31	16250	9805			0.8	No, Vu<V
SLV 11	8.55	-13753	9467	259.48		22792	4.31	12892	7779			0.82	No, Vu<V
SLV 3	5	-23416	2759	6461.52		38807	4.31	16095	9712			3.52	Si
SLV 3	8.55	-10750	4141	2141.06		17816	4.31	11897	7178			1.73	Si
SLV 5	5	-33225	-12468	8831.61		55062	4.31	16250	9805			0.79	No, Vu<V
SLV 5	8.55	-15024	-9697	3930.83		24898	4.31	13313	8033			0.83	No, Vu<V
SLV 4	5	-23416	2759	6461.52		38807	4.31	16095	9712			3.52	Si
SLV 4	8.55	-10750	4141	2141.06		17816	4.31	11897	7178			1.73	Si
SLV 9	5	-35321	-12023	9067.18		58536	4.31	16250	9805			0.82	No, Vu<V
SLV 9	8.55	-16921	-10457	3602.42		28043	4.31	13942	8413			0.8	No, Vu<V
SLV 12	5	-23993	12204	5843.71		39763	4.31	16250	9805			0.8	No, Vu<V
SLV 12	8.55	-13753	9467	259.48		22792	4.31	12892	7779			0.82	No, Vu<V
SLV 6	5	-33225	-12468	8831.61		55062	4.31	16250	9805			0.79	No, Vu<V
SLV 6	8.55	-15024	-9697	3930.83		24898	4.31	13313	8033			0.83	No, Vu<V
SLV 8	5	-21897	11758	5608.14		36289	4.31	15591	9408			0.8	No, Vu<V
SLV 8	8.55	-11855	10227	587.89		19648	4.31	12263	7399			0.72	No, Vu<V

Verifica a pressoflessione fuori piano D.M. 17-01-18 (N.T.C.)

quota 6.775 Wa 0.03 denominatore 8 γM = 2

Comb.	fd	Sa	σ0	N	M	Mc	Coeff.s.	Verifica

Comb.	fd	Sa	σ0	N	M	Mc	Coeff.s.	Verifica
SLV 4	143750	0.39	25658	-15482	240.73	856.16	3.56	Si
SLV 3	143750	0.39	25658	-15482	240.73	856.16	3.56	Si
SLV 7	143750	0.39	26588	-16043	240.73	878.64	3.65	Si
SLV 8	143750	0.39	26588	-16043	240.73	878.64	3.65	Si
SLV 1	143750	0.39	28297	-17074	240.73	918.4	3.82	Si
SLV 2	143750	0.39	28297	-17074	240.73	918.4	3.82	Si
SLV 11	143750	0.39	30024	-18116	240.73	956.53	3.97	Si
SLV 12	143750	0.39	30024	-18116	240.73	956.53	3.97	Si
SLV 5	143750	0.39	35384	-21351	240.73	1061.74	4.41	Si
SLV 6	143750	0.39	35384	-21351	240.73	1061.74	4.41	Si

Verifica dei meccanismi locali di collasso con analisi cinematica lineare

forza di aggancio al piano = 0 quota mezzeria = 6.775 Wa = 0.03 Ta = 0.1503

Comb.	N top	N base	V orto	α0	M*	e*	a0*	aLim	Verifica
SLV 13	-18026	-33801	-10	0.021	2137.3	0.958	0.32032	16.59692	No
SLV 14	-18026	-33801	-10	0.021	2137.3	0.958	0.32032	16.59692	No
SLV 16	-17076	-30403	-10	0.021	2040.7	0.956	0.32223	16.59692	No
SLV 15	-17076	-30403	-10	0.021	2040.7	0.956	0.32223	16.59692	No
SLV 9	-16921	-35321	-4	0.022	2025	0.956	0.32753	16.55957	No
SLV 10	-16921	-35321	-4	0.022	2025	0.956	0.32753	16.55957	No
SLV 6	-15024	-33225	2	0.022	1832.2	0.952	0.33311	16.55957	No
SLV 5	-15024	-33225	2	0.022	1832.2	0.952	0.33311	16.55957	No
SLV 2	-11701	-26814	10	0.022	1495	0.943	0.33608	16.59692	No
SLV 1	-11701	-26814	10	0.022	1495	0.943	0.33608	16.59692	No

Tabella dei coefficienti di sicurezza minimi

Stato limite	Coeff.s.	Comb.	Verifica
PF_SLU	0.822	SLU 84	No
V_SLU	3.138	SLU 76	Si
PF_SLV	4.373	SLV 9	Si
V_SLV	0.723	SLV 7	No
PFFP_SLV	3.556	SLV 3	Si
R_SLV	0.019	SLV 13	No

Maschio 149

Verifiche condotte secondo D.M. 17-01-18 (N.T.C.)

Dati geometrici

X ini.	Y ini.	X fin.	Y fin.	Quota i.	Quota.s	l	Sp.	h netta	h ini.	h fin.	a	a.s.,sx	a.s.,dx
-7.467	-3.169	-8.548	-3.169	L4	L5	1.08	0.28	3.55	3.55	3.55			

Caratteristiche del materiale

(Circolare 7 21-01-19 C8.5.I) Muratura in mattoni pieni e malta di calce LC2_Corti

fb	fk	fvk0	fmedio	τ0	fv0	μ	ϕ	fv,lim	E	G	FC
600000			345000	9000	20000	0.58	0.77	32500	320000000	128000000	1.2

Verifica a pressoflessione nel piano secondo D.M. 17-01-18 NTC §7.8.2.2.1 in combinazioni non sismiche, γM = 3

Comb.	Quota	N	M	σ0	Mu	c.s.	Verifica
SLU 73	5.9	-8646	45.51	28582	3031.56	66.612	Si
SLU 73	7.8	-7142	-820.42	23609	2739.64	3.339	Si
SLU 82	5.9	-9135	42.19	30199	3105.14	73.608	Si
SLU 82	7.8	-7754	-865.97	25634	2870.46	3.315	Si
SLU 64	5.9	-8271	74.19	27344	2968.16	40.006	Si
SLU 64	7.8	-6915	-803.56	22860	2687.09	3.344	Si
SLU 60	5.9	-8671	46.65	28665	3035.61	65.071	Si
SLU 60	7.8	-7379	-831.24	24395	2792.38	3.359	Si
SLU 81	5.9	-9373	48.68	30986	3137.14	64.447	Si
SLU 81	7.8	-8127	-893.72	26867	2942.11	3.292	Si
SLU 65	5.9	-7875	63.37	26032	2894.27	45.671	Si
SLU 65	7.8	-6293	-757.31	20805	2531.23	3.342	Si
SLU 43	5.9	-7569	72.17	25023	2832.71	39.253	Si
SLU 43	7.8	-6167	-741.09	20388	2497.62	3.37	Si
SLU 74	5.9	-9298	24.99	30736	3127.26	125.128	Si
SLU 74	7.8	-7922	-862.9	26190	2903.55	3.365	Si
SLU 44	5.9	-7172	61.34	23711	2746.6	44.774	Si
SLU 44	7.8	-5546	-694.84	18333	2321.38	3.341	Si
SLU 61	5.9	-8433	40.16	27878	2996.28	74.613	Si
SLU 61	7.8	-7006	-803.5	23162	2708.5	3.371	Si

Verifica a pressoflessione nel piano secondo D.M. 17-01-18 NTC §7.8.2.2.1 in combinazioni sismiche, γM = 2

Comb.	Quota	N	M	σ0	Mu	c.s.	Verifica
SLV 12	5.9	-5484	-1858.7	18130	2522.82	1.357	Si
SLV 12	7.8	380	883.92	0	0	0	No, Trazione
SLV 8	5.9	-3093	38.28	10226	1531.11	39.997	Si
SLV 8	7.8	-130	-339.7	0	0	0	No, e>l/2
SLV 2	5.9	-3086	3501.67	0	0	0	No, e>l/2
SLV 2	7.8	-7903	-2930.15	26125	3356.1	1.145	Si
SLV 7	5.9	-3093	38.28	10226	1531.11	39.997	Si
SLV 7	7.8	-130	-339.7	0	0	0	No, e>l/2
SLV 16	5.9	-9771	-3398.62	32302	3882.78	1.142	Si
SLV 16	7.8	-2892	1685.3	0	0	0	No, e>l/2
SLV 3	5.9	-1802	2924.63	0	0	0	No, e>l/2
SLV 3	7.8	-4589	-2393.43	15171	2171.19	0.907	No, M>Mu
SLV 15	5.9	-9771	-3398.62	32302	3882.78	1.142	Si
SLV 15	7.8	-2892	1685.3	0	0	0	No, e>l/2

Comb.	Quota	N	M	σ0	Mu	c.s.	Verifica
SLV 11	5.9	-5484	-1858.7	18130	2522.82	1.357	Si
SLV 11	7.8	380	883.92	0	0	0	No, Trazione
SLV 1	5.9	-3086	3501.67	0	0	0	No, e>l/2
SLV 1	7.8	-7903	-2930.15	26125	3356.1	1.145	Si
SLV 4	5.9	-1802	2924.63	0	0	0	No, e>l/2
SLV 4	7.8	-4589	-2393.43	15171	2171.19	0.907	No, M>Mu

Verifica a taglio nel piano secondo D.M. 17-01-18 (N.T.C.) §7.8.2.2.2 con rottura per scorrimento in combinazioni non sismiche, γM = 3

Comb.	Quota	N	V par	M	σ0	σN	l'	fvd	Vt scorr.	Vt fess.diag.	Vt,lim	c.s.	Verifica
SLU 65	5.9	-7875	634	63.37		26032	1.0803	9026	2730			4.31	Si
SLU 65	7.8	-6293	264	-757.31		20805	1.0803	8329	2520			9.54	Si
SLU 44	5.9	-7172	565	61.34		23711	1.0803	8717	2637			4.67	Si
SLU 44	7.8	-5546	298	-694.84		18333	1.0803	8000	2420			8.12	Si
SLU 52	5.9	-7944	610	43.48		26261	1.0803	9057	2740			4.49	Si
SLU 52	7.8	-6394	228	-757.95		21137	1.0803	8374	2533			11.13	Si
SLU 81	5.9	-9373	636	48.68		30986	1.0803	9687	2930			4.61	Si
SLU 81	7.8	-8127	97	-893.72		26867	1.0803	9138	2764			28.4	Si
SLU 61	5.9	-8433	604	40.16		27878	1.0803	9273	2805			4.64	Si
SLU 61	7.8	-7006	171	-803.5		23162	1.0803	8644	2615			15.29	Si
SLU 23	5.9	-6313	536	47.25		20870	1.0803	8338	2522			4.71	Si
SLU 23	7.8	-5067	201	-602.77		16751	1.0803	7789	2356			11.69	Si
SLU 82	5.9	-9135	673	42.19		30199	1.0803	9582	2899			4.31	Si
SLU 82	7.8	-7754	137	-865.97		25634	1.0803	8973	2714			19.81	Si
SLU 31	5.9	-7084	581	29.39		23419	1.0803	8678	2625			4.52	Si
SLU 31	7.8	-5916	131	-665.88		19556	1.0803	8163	2469			18.83	Si
SLU 40	5.9	-7573	575	26.07		25037	1.0803	8894	2690			4.68	Si
SLU 40	7.8	-6528	75	-711.42		21581	1.0803	8433	2551			34.24	Si
SLU 73	5.9	-8646	678	45.51		28582	1.0803	9366	2833			4.18	Si
SLU 73	7.8	-7142	194	-820.42		23609	1.0803	8703	2633			13.6	Si

Verifica a taglio nel piano secondo D.M. 17-01-18 (N.T.C.) §7.8.2.2.2 con rottura per scorrimento in combinazioni sismiche, γM = 2

Comb.	Quota	N	V par	M	σ0	σN	l'	fvd	Vt scorr.	Vt fess.diag.	Vt,lim	c.s.	Verifica
SLV 1	5.9	-3086	6416	3501.67		0	0	8333	0			0	No, Vu<V
SLV 1	7.8	-7903	2149	-2930.15		55539	0.5082	16250	2312			1.08	Si
SLV 15	5.9	-9771	-5541	-3398.62		60475	0.5771	16250	2626			0.47	No, Vu<V
SLV 15	7.8	-2892	-1870	1685.3		0	0	8333	0			0	No, Vu<V
SLV 12	5.9	-5484	-2351	-1858.7		32441	0.6037	14822	2506			1.07	Si
SLV 12	7.8	380	-1203	883.92		0	0	8333	0			0	No, Vu<V
SLV 2	5.9	-3086	6416	3501.67		0	0	8333	0			0	No, Vu<V
SLV 2	7.8	-7903	2149	-2930.15		55539	0.5082	16250	2312			1.08	Si
SLV 7	5.9	-3093	1039	38.28		10226	1.0803	10379	3139			3.02	Si
SLV 7	7.8	-130	-144	-339.7		0	0	8333	0			0	No, Vu<V
SLV 4	5.9	-1802	5760	2924.63		0	0	8333	0			0	No, Vu<V
SLV 4	7.8	-4589	1661	-2393.43		293048	0.0559	16250	254			0.15	No, Vu<V
SLV 3	5.9	-1802	5760	2924.63		0	0	8333	0			0	No, Vu<V
SLV 3	7.8	-4589	1661	-2393.43		293048	0.0559	16250	254			0.15	No, Vu<V
SLV 16	5.9	-9771	-5541	-3398.62		60475	0.5771	16250	2626			0.47	No, Vu<V
SLV 16	7.8	-2892	-1870	1685.3		0	0	8333	0			0	No, Vu<V
SLV 8	5.9	-3093	1039	38.28		10226	1.0803	10379	3139			3.02	Si
SLV 8	7.8	-130	-144	-339.7		0	0	8333	0			0	No, Vu<V
SLV 11	5.9	-5484	-2351	-1858.7		32441	0.6037	14822	2506			1.07	Si
SLV 11	7.8	380	-1203	883.92		0	0	8333	0			0	No, Vu<V

Verifica a pressoflessione fuori piano D.M. 17-01-18 (N.T.C.)

quota 6.775 Wa 0.05 denominatore 8 γM = 2

Comb.	fd	Sa	σ0	N	M	Mc	Coeff.s.	Verifica
SLV 4	143750	0.39	0	-568	112.81	0	0	No, e>t/2
SLV 8	143750	0.39	0	-657	112.81	0	0	No, e>t/2
SLV 7	143750	0.39	0	-657	112.81	0	0	No, e>t/2
SLV 3	143750	0.39	0	-568	112.81	0	0	No, e>t/2
SLV 1	143750	0.39	9921	-3001	112.81	386.05	3.42	Si
SLV 2	143750	0.39	9921	-3001	112.81	386.05	3.42	Si
SLV 12	143750	0.39	10470	-3167	112.81	405.39	3.59	Si
SLV 11	143750	0.39	10470	-3167	112.81	405.39	3.59	Si
SLV 6	143750	0.39	28984	-8768	112.81	936.29	8.3	Si
SLV 5	143750	0.39	28984	-8768	112.81	936.29	8.3	Si

Verifica dei meccanismi locali di collasso con analisi cinematica lineare

forza di aggancio al piano = 0 quota mezzeria = 6.775 Wa = 0.05 Ta = 0.0752

Comb.	N top	N base	V orto	α0	M*	e*	a0*	aLim	Verifica
SLV 8	-2076	-3547	-229	0	368.7	0.902	0	8.10374	No
SLV 12	-1111	-2459	-198	0	276	0.889	0	8.10374	No
SLV 7	-2076	-3547	-229	0	368.7	0.902	0	8.10374	No
SLV 11	-1111	-2459	-198	0	276	0.889	0	8.10374	No
SLV 9	-7521	-8295	220	0.018	917.5	0.952	0.27557	8.10374	No
SLV 10	-7521	-8295	220	0.018	917.5	0.952	0.27557	8.10374	No
SLV 13	-4152	-4983	110	0.025	576.2	0.929	0.39664	9.20386	No
SLV 14	-4152	-4983	110	0.025	576.2	0.929	0.39664	9.20386	No
SLV 6	-8486	-9383	188	0.024	1015.5	0.956	0.35807	8.10374	No
SLV 5	-8486	-9383	188	0.024	1015.5	0.956	0.35807	8.10374	No

Tabella dei coefficienti di sicurezza minimi

Stato limite	Coeff.s.	Comb.	Verifica
PF_SLU	3.292	SLU 81	Si
V_SLU	4.176	SLU 73	Si
PF_SLV	0	SLV 12	No
V_SLV	0	SLV 1	No
PFFP_SLV	0	SLV 3	No
R_SLV	0	SLV 7	No

Maschio 150

Verifiche condotte secondo D.M. 17-01-18 (N.T.C.)

Dati geometrici

X ini.	Y ini.	X fin.	Y fin.	Quota i.	Quota.s	l	Sp.	h netta	h ini.	h fin.	a	a.s.,sx	a.s.,dx
-5.158	1.141	-5.158	5.808	L4	L5	4.667	0.14	3.55	3.55	3.55			

Caratteristiche del materiale

(Circolare 7 21-01-19 C8.5.I) Muratura in mattoni pieni e malta di calce LC2_Corti

fb	fk	fvk0	fmedio	τ0	fv0	μ	ϕ	fv,lim	E	G	FC
600000			345000	9000	20000	0.58	0.77	32500	320000000	128000000	1.2

Verifica a pressoflessione nel piano secondo D.M. 17-01-18 NTC §7.8.2.2.1 in combinazioni non sismiche, γM = 3

Comb.	Quota	N	M	σ0	Mu	c.s.	Verifica
SLU 77	5	-36754	3137.65	56248	26545.14	8.46	Si
SLU 77	8.55	-23187	-1883.87	35485	30538.59	16.211	Si
SLU 84	5	-37022	3432.69	56659	26303.22	7.663	Si
SLU 84	8.55	-22930	-1723.14	35092	30458.43	17.676	Si
SLU 81	5	-36319	3507.12	55583	26923.2	7.677	Si
SLU 81	8.55	-22109	-1424.92	33835	30163.59	21.169	Si
SLU 74	5	-35973	3265.78	55053	27212.72	8.333	Si
SLU 74	8.55	-22368	-1631.23	34232	30263.07	18.552	Si
SLU 76	5	-35446	3336.16	54247	27632.7	8.283	Si
SLU 76	8.55	-22050	-1682.18	33745	30140.22	17.917	Si
SLU 78	5	-36676	3191.35	56129	26614.09	8.339	Si
SLU 78	8.55	-23189	-1929.45	35489	30539.24	15.828	Si
SLU 73	5	-34665	3464.29	53052	28210.76	8.143	Si
SLU 73	8.55	-21231	-1429.54	32491	29783.02	20.834	Si
SLU 83	5	-37100	3378.99	56778	26231.9	7.763	Si
SLU 83	8.55	-22928	-1677.56	35088	30457.74	18.156	Si
SLU 75	5	-35895	3319.48	54934	27276.34	8.217	Si
SLU 75	8.55	-22370	-1676.8	34235	30263.87	18.049	Si
SLU 82	5	-36241	3560.82	55464	26989.18	7.579	Si
SLU 82	8.55	-22111	-1470.49	33838	30164.44	20.513	Si

Verifica a pressoflessione nel piano secondo D.M. 17-01-18 NTC §7.8.2.2.1 in combinazioni sismiche, γM = 2

Comb.	Quota	N	M	σ0	Mu	c.s.	Verifica
SLV 12	5	-30266	5292.33	46319	43855.82	8.287	Si
SLV 12	8.55	-18841	-2084.56	28834	33592.64	16.115	Si
SLV 3	5	-20356	3790.2	31152	35391.94	9.338	Si
SLV 3	8.55	-11773	-874.34	18017	23422.46	26.789	Si
SLV 16	5	-30819	2826.62	47165	44158.82	15.622	Si
SLV 16	8.55	-19607	-1584.06	30007	34519.56	21.792	Si
SLV 2	5	-17690	1965.8	27073	32136.11	16.348	Si
SLV 2	8.55	-10079	-232.43	15425	20551.84	88.422	Si
SLV 15	5	-30819	2826.62	47165	44158.82	15.622	Si
SLV 15	8.55	-19607	-1584.06	30007	34519.56	21.792	Si
SLV 1	5	-17690	1965.8	27073	32136.11	16.348	Si
SLV 1	8.55	-10079	-232.43	15425	20551.84	88.422	Si
SLV 11	5	-30266	5292.33	46319	43855.82	8.287	Si
SLV 11	8.55	-18841	-2084.56	28834	33592.64	16.115	Si
SLV 4	5	-20356	3790.2	31152	35391.94	9.338	Si
SLV 4	8.55	-11773	-874.34	18017	23422.46	26.789	Si
SLV 8	5	-27127	5581.4	41515	41796.32	7.488	Si
SLV 8	8.55	-16491	-1871.64	25237	30534.99	16.315	Si
SLV 7	5	-27127	5581.4	41515	41796.32	7.488	Si
SLV 7	8.55	-16491	-1871.64	25237	30534.99	16.315	Si

Verifica a taglio nel piano secondo D.M. 17-01-18 (N.T.C.) §7.8.2.2.2 con rottura per scorrimento in combinazioni non sismiche, γM = 3

Comb.	Quota	N	V par	M	σ0	σN	l'	fvd	Vt scorr.	Vt fess.diag.	Vt,lim	c.s.	Verifica
SLU 82	5	-36241	2090	3560.82		55464	4.6673	10833	7079			3.39	Si
SLU 82	8.55	-22111	1077	-1470.49		33838	4.6673	10067	6578			6.11	Si
SLU 77	5	-36754	2114	3137.65		56248	4.6673	10833	7079			3.35	Si
SLU 77	8.55	-23187	1125	-1883.87		35485	4.6673	10287	6722			5.97	Si
SLU 83	5	-37100	2144	3378.99		56778	4.6673	10833	7079			3.3	Si
SLU 83	8.55	-22928	1130	-1677.56		35088	4.6673	10234	6687			5.92	Si
SLU 76	5	-35446	2061	3336.16		54247	4.6673	10833	7079			3.43	Si
SLU 76	8.55	-22050	1068	-1682.18		33745	4.6673	10055	6570			6.15	Si
SLU 84	5	-37022	2166	3432.69		56659	4.6673	10833	7079			3.27	Si
SLU 84	8.55	-22930	1139	-1723.14		35092	4.6673	10234	6687			5.87	Si
SLU 78	5	-36676	2136	3191.35		56129	4.6673	10833	7079			3.31	Si
SLU 78	8.55	-23189	1134	-1929.45		35489	4.6673	10287	6722			5.93	Si
SLU 79	5	-36357	2100	3118.53		55641	4.6673	10833	7079			3.37	Si
SLU 79	8.55	-22865	1115	-1858.87		34993	4.6673	10221	6679			5.99	Si
SLU 81	5	-36319	2068	3507.12		55583	4.6673	10833	7079			3.42	Si
SLU 81	8.55	-22109	1068	-1424.92		33835	4.6673	10067	6578			6.16	Si
SLU 75	5	-35895	2061	3319.48		54934	4.6673	10833	7079			3.43	Si
SLU 75	8.55	-22370	1072	-1676.8		34235	4.6673	10120	6613			6.17	Si
SLU 80	5	-36279	2122	3172.23		55521	4.6673	10833	7079			3.34	Si
SLU 80	8.55	-22867	1124	-1904.45		34996	4.6673	10222	6679			5.94	Si

Verifica a taglio nel piano secondo D.M. 17-01-18 (N.T.C.) §7.8.2.2.2 con rottura per scorrimento in combinazioni sismiche, γM = 2

Comb.	Quota	N	V par	M	σ0	σN	l'	fvd	Vt scorr.	Vt fess.diag.	Vt,lim	c.s.	Verifica
SLV 8	5	-27127	11486	5581.4		41515	4.6673	16250	10618			0.92	No, Vu<V
SLV 8	8.55	-16491	9779	-1871.64		25237	4.6673	13381	8743			0.89	No, Vu<V

Comb.	Quota	N	V par	M	σ0	σN	l'	fvd	Vt scorr.	Vt fess.diag.	Vt,lim	c.s.	Verifica
SLV 11	5	-30266	15190	5292.33		46319	4.6673	16250	10618			0.7	No, Vu<V
SLV 11	8.55	-18841	12613	-2084.56		28834	4.6673	14100	9213			0.73	No, Vu<V
SLV 12	5	-30266	15190	5292.33		46319	4.6673	16250	10618			0.7	No, Vu<V
SLV 12	8.55	-18841	12613	-2084.56		28834	4.6673	14100	9213			0.73	No, Vu<V
SLV 9	5	-21382	-8871	-788.98		32723	4.6673	14878	9722			1.1	Si
SLV 9	8.55	-13196	-8503	55.15		20194	4.6673	12372	8084			0.95	No, Vu<V
SLV 10	5	-21382	-8871	-788.98		32723	4.6673	14878	9722			1.1	Si
SLV 10	8.55	-13196	-8503	55.15		20194	4.6673	12372	8084			0.95	No, Vu<V
SLV 7	5	-27127	11486	5581.4		41515	4.6673	16250	10618			0.92	No, Vu<V
SLV 7	8.55	-16491	9779	-1871.64		25237	4.6673	13381	8743			0.89	No, Vu<V
SLV 16	5	-30819	11090	2826.62		47165	4.6673	16250	10618			0.96	No, Vu<V
SLV 16	8.55	-19607	8528	-1584.06		30007	4.6673	14335	9367			1.1	Si
SLV 6	5	-18243	-12575	-499.91		27919	4.6673	13917	9094			0.72	No, Vu<V
SLV 6	8.55	-10845	-11337	268.06		16598	4.6673	11653	7614			0.67	No, Vu<V
SLV 15	5	-30819	11090	2826.62		47165	4.6673	16250	10618			0.96	No, Vu<V
SLV 15	8.55	-19607	8528	-1584.06		30007	4.6673	14335	9367			1.1	Si
SLV 5	5	-18243	-12575	-499.91		27919	4.6673	13917	9094			0.72	No, Vu<V
SLV 5	8.55	-10845	-11337	268.06		16598	4.6673	11653	7614			0.67	No, Vu<V

Verifica a pressoflessione fuori piano D.M. 17-01-18 (N.T.C.)

quota 6.775 Wa 0.03 denominatore 8 γM = 2

Comb.	fd	Sa	σ0	N	M	Mc	Coeff.s.	Verifica
SLV 2	143750	0.39	21627	-14132	260.69	814.13	3.12	Si
SLV 1	143750	0.39	21627	-14132	260.69	814.13	3.12	Si
SLV 6	143750	0.39	22373	-14619	260.69	835.97	3.21	Si
SLV 5	143750	0.39	22373	-14619	260.69	835.97	3.21	Si
SLV 3	143750	0.39	24709	-16146	260.69	901.64	3.46	Si
SLV 4	143750	0.39	24709	-16146	260.69	901.64	3.46	Si
SLV 9	143750	0.39	26095	-17051	260.69	938.67	3.6	Si
SLV 10	143750	0.39	26095	-17051	260.69	938.67	3.6	Si
SLV 7	143750	0.39	32647	-21332	260.69	1094.28	4.2	Si
SLV 8	143750	0.39	32647	-21332	260.69	1094.28	4.2	Si

Verifica dei meccanismi locali di collasso con analisi cinematica lineare

forza di aggancio al piano = 0 quota mezzeria = 6.775 Wa = 0.03 Ta = 0.1503

Comb.	N top	N base	V orto	α0	M*	e*	a0*	aLim	Verifica
SLV 16	-19607	-30819	-11	0.021	2323.3	0.958	0.31978	16.59692	No
SLV 15	-19607	-30819	-11	0.021	2323.3	0.958	0.31978	16.59692	No
SLV 13	-17914	-28154	-12	0.021	2151.1	0.955	0.32189	16.59692	No
SLV 14	-17914	-28154	-12	0.021	2151.1	0.955	0.32189	16.59692	No
SLV 11	-18841	-30266	-3	0.022	2245.4	0.957	0.32738	16.55957	No
SLV 12	-18841	-30266	-3	0.022	2245.4	0.957	0.32738	16.55957	No
SLV 8	-16491	-27127	4	0.022	2006.6	0.952	0.33135	16.55957	No
SLV 7	-16491	-27127	4	0.022	2006.6	0.952	0.33135	16.55957	No
SLV 4	-11773	-20356	11	0.022	1528	0.94	0.33869	16.59692	No
SLV 3	-11773	-20356	11	0.022	1528	0.94	0.33869	16.59692	No

Tabella dei coefficienti di sicurezza minimi

Stato limite	Coeff.s.	Comb.	Verifica
PF_SLU	7.579	SLU 82	Si
V_SLU	3.269	SLU 84	Si
PF_SLV	7.488	SLV 7	Si
V_SLV	0.672	SLV 5	No
PFFP_SLV	3.123	SLV 1	Si
R_SLV	0.019	SLV 15	No

Maschio 151

Verifiche condotte secondo D.M. 17-01-18 (N.T.C.)

Dati geometrici

X ini.	Y ini.	X fin.	Y fin.	Quota i.	Quota.s	l	Sp.	h netta	h ini.	h fin.	a	a.s.,sx	a.s.,dx
-5.088	5.808	-5.088	5.94	L4	L5	0.132	0.28	3.55	3.55	3.55			

Caratteristiche del materiale

(Circolare 7 21-01-19 C8.5.I) Muratura in mattoni pieni e malta di calce LC2_Corti

fb	fk	fvk0	fmedio	τ0	fv0	μ	ϕ	fv,lim	E	G	FC
600000			345000	9000	20000	0.58	0.77	32500	320000000	128000000	1.2

Verifica a pressoflessione nel piano secondo D.M. 17-01-18 NTC §7.8.2.2.1 in combinazioni non sismiche, γM = 3

Comb.	Quota	N	M	σ0	Mu	c.s.	Verifica
SLU 81	7	-1532	-64.8	41555	49.38	0.762	No, M>Mu
SLU 81	7.8	-2296	94.72	62284	35.56	0.375	No, M>Mu
SLU 77	7	-1559	-64.8	42295	49.33	0.761	No, M>Mu
SLU 77	7.8	-2337	95.35	63398	34.1	0.358	No, M>Mu
SLU 75	7	-1530	-62.57	41522	49.38	0.789	No, M>Mu
SLU 75	7.8	-2274	92.02	61687	36.32	0.395	No, M>Mu
SLU 74	7	-1532	-62.55	41571	49.38	0.789	No, M>Mu
SLU 74	7.8	-2278	92.44	61800	36.18	0.391	No, M>Mu
SLU 82	7	-1530	-64.82	41506	49.38	0.762	No, M>Mu
SLU 82	7.8	-2291	94.3	62171	35.71	0.379	No, M>Mu
SLU 83	7	-1558	-67.06	42280	49.33	0.736	No, M>Mu
SLU 83	7.8	-2354	97.63	63882	33.44	0.342	No, M>Mu
SLU 84	7	-1557	-67.08	42231	49.33	0.735	No, M>Mu
SLU 84	7.8	-2350	97.21	63769	33.59	0.346	No, M>Mu
SLU 78	7	-1557	-64.82	42247	49.33	0.761	No, M>Mu

Comb.	Quota	N	M	σ0	Mu	c.s.	Verifica
SLU 78	7.8	-2332	94.93	63285	34.25	0.361	No, M>Mu
SLU 79	7	-1536	-64.28	41672	49.37	0.768	No, M>Mu
SLU 79	7.8	-2305	94.24	62549	35.22	0.374	No, M>Mu
SLU 80	7	-1534	-64.3	41623	49.38	0.768	No, M>Mu
SLU 80	7.8	-2301	93.82	62436	35.37	0.377	No, M>Mu

Verifica a pressoflessione nel piano secondo D.M. 17-01-18 NTC §7.8.2.2.1 in combinazioni sismiche, γM = 2

Comb.	Quota	N	M	σ0	Mu	c.s.	Verifica
SLV 10	7	317	-303.34	0	0	0	No, Trazione
SLV 10	7.8	-2424	233.67	0	0	0	No, e>l/2
SLV 2	7	-1382	91.85	0	0	0	No, e>l/2
SLV 2	7.8	-200	-87.11	0	0	0	No, e>l/2
SLV 7	7	-2431	227	0	0	0	No, e>l/2
SLV 7	7.8	-590	-117.42	0	0	0	No, e>l/2
SLV 1	7	-1382	91.85	0	0	0	No, e>l/2
SLV 1	7.8	-200	-87.11	0	0	0	No, e>l/2
SLV 4	7	-2085	216.35	0	0	0	No, e>l/2
SLV 4	7.8	89	-159.75	0	0	0	No, Trazione
SLV 5	7	-88	-187.98	0	0	0	No, e>l/2
SLV 5	7.8	-1553	124.73	0	0	0	No, e>l/2
SLV 9	7	317	-303.34	0	0	0	No, Trazione
SLV 9	7.8	-2424	233.67	0	0	0	No, e>l/2
SLV 3	7	-2085	216.35	0	0	0	No, e>l/2
SLV 3	7.8	89	-159.75	0	0	0	No, Trazione
SLV 8	7	-2431	227	0	0	0	No, e>l/2
SLV 8	7.8	-590	-117.42	0	0	0	No, e>l/2
SLV 6	7	-88	-187.98	0	0	0	No, e>l/2
SLV 6	7.8	-1553	124.73	0	0	0	No, e>l/2

Verifica a taglio nel piano secondo D.M. 17-01-18 (N.T.C.) §7.8.2.2.2 con rottura per scorrimento in combinazioni non sismiche, γM = 3

Comb.	Quota	N	V par	M	σ0	σN	I'	fvd	Vt scorr.	Vt fess.diag.	Vt,lim	c.s.	Verifica
SLU 84	7	-1557	-277	-67.08		81551	0.0682	10833	207			0.75	No, Vu<V
SLU 84	7.8	-2350	-350	97.21		114415	0.0734	10833	223			0.64	No, Vu<V
SLU 81	7	-1532	-268	-64.8		77576	0.0705	10833	214			0.8	No, Vu<V
SLU 81	7.8	-2296	-341	94.72		111299	0.0737	10833	223			0.66	No, Vu<V
SLU 80	7	-1534	-265	-64.3		76403	0.0717	10833	218			0.82	No, Vu<V
SLU 80	7.8	-2301	-337	93.82		109385	0.0751	10833	228			0.68	No, Vu<V
SLU 41	7	-1306	-249	-60.78		80651	0.0578	10833	175			0.7	No, Vu<V
SLU 41	7.8	-2029	-314	86.89		105052	0.069	10833	209			0.67	No, Vu<V
SLU 78	7	-1557	-267	-64.82		76640	0.0726	10833	220			0.82	No, Vu<V
SLU 78	7.8	-2332	-341	94.93		110558	0.0753	10833	229			0.67	No, Vu<V
SLU 79	7	-1536	-265	-64.28		76295	0.0719	10833	218			0.82	No, Vu<V
SLU 79	7.8	-2305	-338	94.24		110052	0.0748	10833	227			0.67	No, Vu<V
SLU 83	7	-1558	-276	-67.06		81422	0.0684	10833	207			0.75	No, Vu<V
SLU 83	7.8	-2354	-351	97.63		115104	0.0731	10833	222			0.63	No, Vu<V
SLU 77	7	-1559	-267	-64.8		76537	0.0727	10833	221			0.83	No, Vu<V
SLU 77	7.8	-2337	-343	95.35		111222	0.075	10833	228			0.66	No, Vu<V
SLU 42	7	-1304	-249	-60.8		80872	0.0576	10833	175			0.7	No, Vu<V
SLU 42	7.8	-2025	-312	86.48		104305	0.0693	10833	210			0.67	No, Vu<V
SLU 82	7	-1530	-268	-64.82		77692	0.0703	10833	213			0.8	No, Vu<V
SLU 82	7.8	-2291	-339	94.3		110617	0.074	10833	224			0.66	No, Vu<V

Verifica a taglio nel piano secondo D.M. 17-01-18 (N.T.C.) §7.8.2.2.2 con rottura per scorrimento in combinazioni sismiche, γM = 2

Comb.	Quota	N	V par	M	σ0	σN	I'	fvd	Vt scorr.	Vt fess.diag.	Vt,lim	c.s.	Verifica
SLV 5	7	-88	-822	-187.98		0	0	8333	0			0	No, Vu<V
SLV 5	7.8	-1553	-456	124.73		0	0	8333	0			0	No, Vu<V
SLV 8	7	-2431	929	227		0	0	8333	0			0	No, Vu<V
SLV 8	7.8	-590	425	-117.42		0	0	8333	0			0	No, Vu<V
SLV 3	7	-2085	812	216.35		0	0	8333	0			0	No, Vu<V
SLV 3	7.8	89	566	-159.75		0	0	8333	0			0	No, Vu<V
SLV 6	7	-88	-822	-187.98		0	0	8333	0			0	No, Vu<V
SLV 6	7.8	-1553	-456	124.73		0	0	8333	0			0	No, Vu<V
SLV 7	7	-2431	929	227		0	0	8333	0			0	No, Vu<V
SLV 7	7.8	-590	425	-117.42		0	0	8333	0			0	No, Vu<V
SLV 9	7	317	-1248	-303.34		0	0	8333	0			0	No, Vu<V
SLV 9	7.8	-2424	-841	233.67		0	0	8333	0			0	No, Vu<V
SLV 2	7	-1382	287	91.85		0	0	8333	0			0	No, Vu<V
SLV 2	7.8	-200	302	-87.11		0	0	8333	0			0	No, Vu<V
SLV 1	7	-1382	287	91.85		0	0	8333	0			0	No, Vu<V
SLV 1	7.8	-200	302	-87.11		0	0	8333	0			0	No, Vu<V
SLV 10	7	317	-1248	-303.34		0	0	8333	0			0	No, Vu<V
SLV 10	7.8	-2424	-841	233.67		0	0	8333	0			0	No, Vu<V
SLV 4	7	-2085	812	216.35		0	0	8333	0			0	No, Vu<V
SLV 4	7.8	89	566	-159.75		0	0	8333	0			0	No, Vu<V

Verifica a pressoflessione fuori piano D.M. 17-01-18 (N.T.C.)

quota 6.775 Wa 0.05 denominatore 8 γM = 2

Comb.	fd	Sa	σ0	N	M	Mc	Coeff.s.	Verifica
SLV 5	143750	0.39	0	-81	14.07	0	0	No, e>t/2
SLV 9	143750	0.39	0	60	14.07	0	0	No, Trazione
SLV 10	143750	0.39	0	60	14.07	0	0	No, Trazione
SLV 6	143750	0.39	0	-81	14.07	0	0	No, e>t/2
SLV 14	143750	0.39	4484	-165	14.07	22.29	1.58	Si
SLV 13	143750	0.39	4484	-165	14.07	22.29	1.58	Si
SLV 15	143750	0.39	13566	-500	14.07	62.23	4.42	Si
SLV 16	143750	0.39	13566	-500	14.07	62.23	4.42	Si
SLV 1	143750	0.39	17273	-637	14.07	76.53	5.44	Si
SLV 2	143750	0.39	17273	-637	14.07	76.53	5.44	Si

Verifica dei meccanismi locali di collasso con analisi cinematica lineare

forza di aggancio al piano = 0 quota mezzeria = 6.775 Wa = 0.05 Ta = 0.0752

Comb.	N top	N base	V orto	α0	M*	e*	a0*	aLim	Verifica
SLV 16	-1042	-1454	-63	0	124.5	0.956	0	9.20386	No
SLV 15	-1042	-1454	-63	0	124.5	0.956	0	9.20386	No
SLV 2	-266	-705	63	0	46.3	0.904	0	9.20386	No
SLV 4	-260	-760	66	0	45.6	0.903	0	9.20386	No
SLV 13	-1048	-1400	-66	0	125.2	0.957	0	9.20386	No
SLV 3	-260	-760	66	0	45.6	0.903	0	9.20386	No
SLV 1	-266	-705	63	0	46.3	0.904	0	9.20386	No
SLV 14	-1048	-1400	-66	0	125.2	0.957	0	9.20386	No
SLV 8	-526	-1067	23	0.01	72.3	0.93	0.16115	8.10374	No
SLV 7	-526	-1067	23	0.01	72.3	0.93	0.16115	8.10374	No

Tabella dei coefficienti di sicurezza minimi

Stato limite	Coeff.s.	Comb.	Verifica
PF_SLU	0.342	SLU 83	No
V_SLU	0.631	SLU 83	No
PF_SLV	0	SLV 10	No
V_SLV	0	SLV 1	No
PFFP_SLV	0	SLV 10	No
R_SLV	0	SLV 1	No

Maschio 152

Verifiche condotte secondo D.M. 17-01-18 (N.T.C.)

Dati geometrici

X ini.	Y ini.	X fin.	Y fin.	Quota i.	Quota.s	l	Sp.	h netta	h ini.	h fin.	a	a.s.,sx	a.s.,dx
-5.088	6.44	-5.088	6.5	L4	L5	0.06	0.28	3.55	3.55	3.55			

Caratteristiche del materiale

(Circolare 7 21-01-19 C8.5.I) Muratura in mattoni pieni e malta di calce LC2_Corti

fb	fk	fvk0	fmedio	τ0	fv0	μ	ϕ	fv,lim	E	G	FC
600000			345000	9000	20000	0.58	0.77	32500	320000000	128000000	1.2

Verifica a pressoflessione nel piano secondo D.M. 17-01-18 NTC §7.8.2.2.1 in combinazioni non sismiche, γM = 3

Comb.	Quota	N	M	σ0	Mu	c.s.	Verifica
SLU 75	7	-1393	-18.42	83021	0	0	No, Rottura per schiacciamento
SLU 75	7.8	-981	15.97	58458	8.29	0.519	No, M>Mu
SLU 79	7	-1406	-18.99	83837	0	0	No, Rottura per schiacciamento
SLU 79	7.8	-982	16.51	58526	8.28	0.502	No, M>Mu
SLU 80	7	-1405	-18.96	83781	0	0	No, Rottura per schiacciamento
SLU 80	7.8	-982	16.47	58520	8.28	0.503	No, M>Mu
SLU 84	7	-1436	-19.54	85585	0	0	No, Rottura per schiacciamento
SLU 84	7.8	-999	17.03	59572	8.04	0.472	No, M>Mu
SLU 82	7	-1403	-18.83	83660	0	0	No, Rottura per schiacciamento
SLU 82	7.8	-982	16.39	58553	8.27	0.505	No, M>Mu
SLU 83	7	-1437	-19.58	85641	0	0	No, Rottura per schiacciamento
SLU 83	7.8	-999	17.07	59578	8.04	0.471	No, M>Mu
SLU 74	7	-1394	-18.46	83077	0	0	No, Rottura per schiacciamento
SLU 74	7.8	-981	16.01	58464	8.29	0.518	No, M>Mu
SLU 77	7	-1426	-19.17	85002	0	0	No, Rottura per schiacciamento
SLU 77	7.8	-998	16.65	59483	8.06	0.484	No, M>Mu
SLU 81	7	-1404	-18.87	83716	0	0	No, Rottura per schiacciamento
SLU 81	7.8	-982	16.42	58559	8.27	0.504	No, M>Mu
SLU 76	7	-1372	-18.22	81819	0	0	No, Rottura per schiacciamento
SLU 76	7.8	-964	15.8	57497	8.5	0.538	No, M>Mu

Verifica a pressoflessione nel piano secondo D.M. 17-01-18 NTC §7.8.2.2.1 in combinazioni sismiche, γM = 2

Comb.	Quota	N	M	σ0	Mu	c.s.	Verifica
SLV 6	7	-1005	-30.31	0	0	0	No, e>l/2
SLV 6	7.8	-625	24.77	0	0	0	No, e>l/2
SLV 9	7	-1364	-59.9	0	0	0	No, e>l/2
SLV 9	7.8	-370	53.88	0	0	0	No, e>l/2
SLV 5	7	-1005	-30.31	0	0	0	No, e>l/2
SLV 5	7.8	-625	24.77	0	0	0	No, e>l/2
SLV 8	7	-496	36.95	0	0	0	No, e>l/2
SLV 8	7.8	-972	-34.24	0	0	0	No, e>l/2
SLV 3	7	-256	47.92	0	0	0	No, e>l/2
SLV 3	7.8	-1149	-47.56	0	0	0	No, e>l/2
SLV 2	7	-409	27.74	0	0	0	No, e>l/2
SLV 2	7.8	-1045	-29.86	62282	15.34	0.514	No, M>Mu
SLV 10	7	-1364	-59.9	0	0	0	No, e>l/2
SLV 10	7.8	-370	53.88	0	0	0	No, e>l/2
SLV 7	7	-496	36.95	0	0	0	No, e>l/2
SLV 7	7.8	-972	-34.24	0	0	0	No, e>l/2

Comb.	Quota	N	M	σ0	Mu	c.s.	Verifica
SLV 1	7	-409	27.74	0	0	0	No, e>l/2
SLV 1	7.8	-1045	-29.86	62282	15.34	0.514	No, M>Mu
SLV 4	7	-256	47.92	0	0	0	No, e>l/2
SLV 4	7.8	-1149	-47.56	0	0	0	No, e>l/2

Verifica a taglio nel piano secondo D.M. 17-01-18 (N.T.C.) §7.8.2.2.2 con rottura per scorrimento in combinazioni non sismiche, γM = 3

Comb.	Quota	N	V par	M	σ0	σN	l'	fvd	Vt scorr.	Vt fess.diag.	Vt,lim	c.s.	Verifica
SLU 77	7	-1426	-109	-19.17		102826	0.0495	10833	150			1.38	Si
SLU 77	7.8	-998	-103	16.65		89533	0.0398	10833	121			1.17	Si
SLU 83	7	-1437	-111	-19.58		104779	0.049	10833	149			1.34	Si
SLU 83	7.8	-999	-106	17.07		92396	0.0386	10833	117			1.11	Si
SLU 79	7	-1406	-108	-18.99		101792	0.0493	10833	150			1.39	Si
SLU 79	7.8	-982	-103	16.51		88944	0.0394	10833	120			1.17	Si
SLU 37	7	-1201	-96	-16.95		90249	0.0475	10833	144			1.5	Si
SLU 37	7.8	-825	-92	14.83		82041	0.0359	10833	109			1.18	Si
SLU 80	7	-1405	-108	-18.96		101609	0.0494	10833	150			1.39	Si
SLU 80	7.8	-982	-102	16.47		88696	0.0395	10833	120			1.17	Si
SLU 81	7	-1404	-107	-18.87		101231	0.0495	10833	150			1.4	Si
SLU 81	7.8	-982	-102	16.42		88370	0.0397	10833	120			1.18	Si
SLU 42	7	-1231	-100	-17.5		93101	0.0472	10833	143			1.44	Si
SLU 42	7.8	-842	-95	15.36		85553	0.0352	10833	107			1.12	Si
SLU 78	7	-1425	-109	-19.13		102643	0.0496	10833	150			1.39	Si
SLU 78	7.8	-998	-103	16.61		89290	0.0399	10833	121			1.17	Si
SLU 41	7	-1232	-100	-17.54		93295	0.0471	10833	143			1.43	Si
SLU 41	7.8	-842	-95	15.39		85864	0.035	10833	106			1.11	Si
SLU 84	7	-1436	-111	-19.54		104594	0.049	10833	149			1.34	Si
SLU 84	7.8	-999	-106	17.03		92138	0.0387	10833	117			1.11	Si

Verifica a taglio nel piano secondo D.M. 17-01-18 (N.T.C.) §7.8.2.2.2 con rottura per scorrimento in combinazioni sismiche, γM = 2

Comb.	Quota	N	V par	M	σ0	σN	l'	fvd	Vt scorr.	Vt fess.diag.	Vt,lim	c.s.	Verifica
SLV 5	7	-1005	-138	-30.31		0	0	8333	0			0	No, Vu<V
SLV 5	7.8	-625	-62	24.77		0	0	8333	0			0	No, Vu<V
SLV 3	7	-256	263	47.92		0	0	8333	0			0	No, Vu<V
SLV 3	7.8	-1149	246	-47.56		0	0	8333	0			0	No, Vu<V
SLV 8	7	-496	177	36.95		0	0	8333	0			0	No, Vu<V
SLV 8	7.8	-972	108	-34.24		0	0	8333	0			0	No, Vu<V
SLV 1	7	-409	168	27.74		0	0	8333	0			0	No, Vu<V
SLV 1	7.8	-1045	195	-29.86		903751	0.0041	16250	19			0.1	No, Vu<V
SLV 6	7	-1005	-138	-30.31		0	0	8333	0			0	No, Vu<V
SLV 6	7.8	-625	-62	24.77		0	0	8333	0			0	No, Vu<V
SLV 4	7	-256	263	47.92		0	0	8333	0			0	No, Vu<V
SLV 4	7.8	-1149	246	-47.56		0	0	8333	0			0	No, Vu<V
SLV 7	7	-496	177	36.95		0	0	8333	0			0	No, Vu<V
SLV 7	7.8	-972	108	-34.24		0	0	8333	0			0	No, Vu<V
SLV 9	7	-1364	-306	-59.9		0	0	8333	0			0	No, Vu<V
SLV 9	7.8	-370	-231	53.88		0	0	8333	0			0	No, Vu<V
SLV 10	7	-1364	-306	-59.9		0	0	8333	0			0	No, Vu<V
SLV 10	7.8	-370	-231	53.88		0	0	8333	0			0	No, Vu<V
SLV 2	7	-409	168	27.74		0	0	8333	0			0	No, Vu<V
SLV 2	7.8	-1045	195	-29.86		903751	0.0041	16250	19			0.1	No, Vu<V

Verifica a pressoflessione fuori piano D.M. 17-01-18 (N.T.C.)

quota 6.775 Wa 0.05 denominatore 8 γM = 2

Comb.	fd	Sa	σ0	N	M	Mc	Coeff.s.	Verifica
SLV 2	143750	0.39	0	-40	6.4	0	0	No, e>t/2
SLV 1	143750	0.39	0	-40	6.4	0	0	No, e>t/2
SLV 8	143750	0.39	0	-18	6.4	0	0	No, e>t/2
SLV 3	143750	0.39	0	5	6.4	0	0	No, Trazione
SLV 4	143750	0.39	0	5	6.4	0	0	No, Trazione
SLV 7	143750	0.39	0	-18	6.4	0	0	No, e>t/2
SLV 11	143750	0.39	4966	-83	6.4	11.19	1.75	Si
SLV 12	143750	0.39	4966	-83	6.4	11.19	1.75	Si
SLV 5	143750	0.39	10029	-168	6.4	21.62	3.38	Si
SLV 6	143750	0.39	10029	-168	6.4	21.62	3.38	Si

Verifica dei meccanismi locali di collasso con analisi cinematica lineare

forza di aggancio al piano = 0 quota mezzeria = 6.775 Wa = 0.05 Ta = 0.0752

Comb.	N top	N base	V orto	α0	M*	e*	a0*	aLim	Verifica
SLV 5	-176	-112	76	0	26.5	0.918	0	8.10374	No
SLV 7	-215	-564	-76	0	30.4	0.926	0	8.10374	No
SLV 2	-210	-186	24	0	29.9	0.925	0	9.20386	No
SLV 8	-215	-564	-76	0	30.4	0.926	0	8.10374	No
SLV 9	-159	-185	76	0	24.8	0.914	0	8.10374	No
SLV 10	-159	-185	76	0	24.8	0.914	0	8.10374	No
SLV 1	-210	-186	24	0	29.9	0.925	0	9.20386	No
SLV 3	-221	-321	-22	0	31.1	0.927	0	9.20386	No
SLV 6	-176	-112	76	0	26.5	0.918	0	8.10374	No
SLV 4	-221	-321	-22	0	31.1	0.927	0	9.20386	No

Tabella dei coefficienti di sicurezza minimi

Stato limite	Coeff.s.	Comb.	Verifica
PF_SLU	0	SLU 74	No
V_SLU	1.106	SLU 83	Si
PF_SLV	0	SLV 1	No
V_SLV	0	SLV 1	No
PFFP_SLV	0	SLV 4	No
R_SLV	0	SLV 1	No

Maschio 153

Verifiche condotte secondo D.M. 17-01-18 (N.T.C.)

Dati geometrici

X ini.	Y ini.	X fin.	Y fin.	Quota i.	Quota.s	l	Sp.	h netta	h ini.	h fin.	a	a.s.,sx	a.s.,dx
-5.937	-3.169	-6.467	-3.169	L4	L5	0.53	0.28	3.55	3.55	3.55			

Caratteristiche del materiale

(Circolare 7 21-01-19 C8.5.I) Muratura in mattoni pieni e malta di calce LC2_Corti

fb	fk	fvk0	fmedio	τ0	fv0	μ	ϕ	fv,lim	E	G	FC
600000			345000	9000	20000	0.58	0.77	32500	320000000	128000000	1.2

Verifica a pressoflessione nel piano secondo D.M. 17-01-18 NTC §7.8.2.2.1 in combinazioni non sismiche, γM = 3

Comb.	Quota	N	M	σ0	Mu	c.s.	Verifica
SLU 60	7	-5426	9.33	36553	792.92	84.947	Si
SLU 60	7.8	-5821	-152.36	39213	800.23	5.252	Si
SLU 43	7	-4562	8.53	30733	753.08	88.251	Si
SLU 43	7.8	-4801	-140.73	32344	767.38	5.453	Si
SLU 83	7	-6018	0.13	40540	801.33	1000	Si
SLU 83	7.8	-6495	-147.48	43756	796.92	5.403	Si
SLU 81	7	-5966	9.01	40189	801.2	88.901	Si
SLU 81	7.8	-6443	-161.83	43406	797.88	4.93	Si
SLU 74	7	-5845	1.55	39374	800.46	515.994	Si
SLU 74	7.8	-6283	-150.94	42324	800.12	5.301	Si
SLU 62	7	-5478	0.46	36904	794.28	1000	Si
SLU 62	7.8	-5873	-138.01	39564	800.69	5.802	Si
SLU 64	7	-5102	8.21	34369	781.8	95.21	Si
SLU 64	7.8	-5424	-150.2	36536	792.85	5.279	Si
SLU 53	7	-5305	1.87	35738	789.31	421.363	Si
SLU 53	7.8	-5660	-141.46	38131	798.08	5.642	Si
SLU 45	7	-4700	1.31	31664	761.65	580.27	Si
SLU 45	7.8	-4947	-133.32	33322	774.84	5.812	Si
SLU 66	7	-5240	0.99	35300	787.11	794.545	Si
SLU 66	7.8	-5569	-142.79	37515	796.35	5.577	Si

Verifica a pressoflessione nel piano secondo D.M. 17-01-18 NTC §7.8.2.2.1 in combinazioni sismiche, γM = 2

Comb.	Quota	N	M	σ0	Mu	c.s.	Verifica
SLV 7	7	-2134	366	14376	499.15	1.364	Si
SLV 7	7.8	-3935	-458.69	26507	816.77	1.781	Si
SLV 16	7	-6088	-679.46	41012	1072.14	1.578	Si
SLV 16	7.8	-6444	1003.23	43411	1101.32	1.098	Si
SLV 4	7	-1202	777.13	0	0	0	No, e>l/2
SLV 4	7.8	-2231	-1238.76	0	0	0	No, e>l/2
SLV 1	7	-1869	692.56	0	0	0	No, e>l/2
SLV 1	7.8	-2034	-1234.8	0	0	0	No, e>l/2
SLV 2	7	-1869	692.56	0	0	0	No, e>l/2
SLV 2	7.8	-2034	-1234.8	0	0	0	No, e>l/2
SLV 8	7	-2134	366	14376	499.15	1.364	Si
SLV 8	7.8	-3935	-458.69	26507	816.77	1.781	Si
SLV 13	7	-6755	-764.04	45505	1123.76	1.471	Si
SLV 13	7.8	-6248	1007.2	42087	1085.67	1.078	Si
SLV 15	7	-6088	-679.46	41012	1072.14	1.578	Si
SLV 15	7.8	-6444	1003.23	43411	1101.32	1.098	Si
SLV 3	7	-1202	777.13	0	0	0	No, e>l/2
SLV 3	7.8	-2231	-1238.76	0	0	0	No, e>l/2
SLV 14	7	-6755	-764.04	45505	1123.76	1.471	Si
SLV 14	7.8	-6248	1007.2	42087	1085.67	1.078	Si

Verifica a taglio nel piano secondo D.M. 17-01-18 (N.T.C.) §7.8.2.2.2 con rottura per scorrimento in combinazioni non sismiche, γM = 3

Comb.	Quota	N	V par	M	σ0	σN	l'	fvd	Vt scorr.	Vt fess.diag.	Vt,lim	c.s.	Verifica
SLU 60	7	-5426	257	9.33		36553	0.5302	10429	1548			6.01	Si
SLU 60	7.8	-5821	258	-152.36		39213	0.5302	10784	1601			6.22	Si
SLU 74	7	-5845	250	1.55		39374	0.5302	10805	1604			6.43	Si
SLU 74	7.8	-6283	250	-150.94		42324	0.5302	10833	1608			6.44	Si
SLU 39	7	-5055	228	6.96		34055	0.5302	10096	1499			6.58	Si
SLU 39	7.8	-5500	228	-131.86		37048	0.5302	10495	1558			6.84	Si
SLU 81	7	-5966	276	9.01		40189	0.5302	10833	1608			5.83	Si
SLU 81	7.8	-6443	276	-161.83		43406	0.5302	10833	1608			5.83	Si
SLU 66	7	-5240	230	0.99		35300	0.5302	10262	1523			6.63	Si
SLU 66	7.8	-5569	230	-142.79		37515	0.5302	10558	1567			6.82	Si
SLU 64	7	-5102	247	8.21		34369	0.5302	10138	1505			6.08	Si
SLU 64	7.8	-5424	248	-150.2		36536	0.5302	10427	1548			6.25	Si
SLU 83	7	-6018	247	0.13		40540	0.5302	10833	1608			6.52	Si
SLU 83	7.8	-6495	247	-147.48		43756	0.5302	10833	1608			6.52	Si
SLU 53	7	-5305	231	1.87		35738	0.5302	10321	1532			6.62	Si
SLU 53	7.8	-5660	231	-141.46		38131	0.5302	10640	1579			6.83	Si
SLU 43	7	-4562	229	8.53		30733	0.5302	9653	1433			6.25	Si
SLU 43	7.8	-4801	229	-140.73		32344	0.5302	9868	1465			6.39	Si
SLU 62	7	-5478	228	0.46		36904	0.5302	10476	1555			6.81	Si
SLU 62	7.8	-5873	229	-138.01		39564	0.5302	10831	1608			7.04	Si

Verifica a taglio nel piano secondo D.M. 17-01-18 (N.T.C.) §7.8.2.2.2 con rottura per scorrimento in combinazioni sismiche, γM = 2

Comb.	Quota	N	V par	M	σ0	σN	l'	fvd	Vt scorr.	Vt fess.diag.	Vt,lim	c.s.	Verifica
SLV 2	7	-1869	2443	692.56		0	0	8333	0			0	No, Vu<V
SLV 2	7.8	-2034	2508	-1234.8		0	0	8333	0			0	No, Vu<V
SLV 16	7	-6088	-2059	-679.46		47224	0.4604	16250	2095			1.02	Si
SLV 16	7.8	-6444	-2124	1003.23		70125	0.3282	16250	1493			0.7	No, Vu<V
SLV 13	7	-6755	-2256	-764.04		52915	0.4559	16250	2074			0.92	No, Vu<V

Comb.	Quota	N	V par	M	σ0	σN	l'	fvd	Vt scorr.	Vt fess.diag.	Vt,lim	c.s.	Verifica
SLV 13	7.8	-6248	-2221	1007.2		71607	0.3116	16250	1418			0.64	No, Vu<V
SLV 15	7	-6088	-2059	-679.46		47224	0.4604	16250	2095			1.02	Si
SLV 15	7.8	-6444	-2124	1003.23		70125	0.3282	16250	1493			0.7	No, Vu<V
SLV 7	7	-2134	1224	366		27149	0.2807	13763	1082			0.88	No, Vu<V
SLV 7	7.8	-3935	1064	-458.69		31542	0.4455	14642	1827			1.72	Si
SLV 8	7	-2134	1224	366		27149	0.2807	13763	1082			0.88	No, Vu<V
SLV 8	7.8	-3935	1064	-458.69		31542	0.4455	14642	1827			1.72	Si
SLV 1	7	-1869	2443	692.56		0	0	8333	0			0	No, Vu<V
SLV 1	7.8	-2034	2508	-1234.8		0	0	8333	0			0	No, Vu<V
SLV 4	7	-1202	2640	777.13		0	0	8333	0			0	No, Vu<V
SLV 4	7.8	-2231	2605	-1238.76		0	0	8333	0			0	No, Vu<V
SLV 14	7	-6755	-2256	-764.04		52915	0.4559	16250	2074			0.92	No, Vu<V
SLV 14	7.8	-6248	-2221	1007.2		71607	0.3116	16250	1418			0.64	No, Vu<V
SLV 3	7	-1202	2640	777.13		0	0	8333	0			0	No, Vu<V
SLV 3	7.8	-2231	2605	-1238.76		0	0	8333	0			0	No, Vu<V

Verifica a pressoflessione fuori piano D.M. 17-01-18 (N.T.C.)

quota 6.775 Wa 0.05 denominatore 8 γM = 2

Comb.	fd	Sa	σ0	N	M	Mc	Coeff.s.	Verifica
SLV 8	143750	0.39	11678	-1734	55.36	219.5	3.96	Si
SLV 7	143750	0.39	11678	-1734	55.36	219.5	3.96	Si
SLV 3	143750	0.39	11686	-1735	55.36	219.63	3.97	Si
SLV 4	143750	0.39	11686	-1735	55.36	219.63	3.97	Si
SLV 12	143750	0.39	15822	-2349	55.36	286.24	5.17	Si
SLV 11	143750	0.39	15822	-2349	55.36	286.24	5.17	Si
SLV 2	143750	0.39	15837	-2351	55.36	286.47	5.17	Si
SLV 1	143750	0.39	15837	-2351	55.36	286.47	5.17	Si
SLV 15	143750	0.39	25500	-3785	55.36	419.35	7.57	Si
SLV 16	143750	0.39	25500	-3785	55.36	419.35	7.57	Si

Verifica dei meccanismi locali di collasso con analisi cinematica lineare

forza di aggancio al piano = 0 quota mezzeria = 6.775 Wa = 0.05 Ta = 0.0752

Comb.	N top	N base	V orto	α0	M*	e*	a0*	aLim	Verifica
SLV 1	-1168	-3038	100	0	195.7	0.907	0	9.20386	No
SLV 2	-1168	-3038	100	0	195.7	0.907	0	9.20386	No
SLV 3	-1193	-2419	99	0	198.2	0.908	0	9.20386	No
SLV 4	-1193	-2419	99	0	198.2	0.908	0	9.20386	No
SLV 16	-2739	-2233	-105	0.013	353.6	0.941	0.19589	9.20386	No
SLV 15	-2739	-2233	-105	0.013	353.6	0.941	0.19589	9.20386	No
SLV 14	-2714	-2852	-103	0.013	351.1	0.94	0.20079	9.20386	No
SLV 13	-2714	-2852	-103	0.013	351.1	0.94	0.20079	9.20386	No
SLV 11	-2227	-1576	-35	0.033	301.9	0.933	0.51786	8.10374	No
SLV 12	-2227	-1576	-35	0.033	301.9	0.933	0.51786	8.10374	No

Tabella dei coefficienti di sicurezza minimi

Stato limite	Coeff.s.	Comb.	Verifica
PF_SLU	4.93	SLU 81	Si
V_SLU	5.831	SLU 81	Si
PF_SLV	0	SLV 1	No
V_SLV	0	SLV 1	No
PFFP_SLV	3.965	SLV 7	Si
R_SLV	0	SLV 1	No

Maschio 154

Verifiche condotte secondo D.M. 17-01-18 (N.T.C.)

Dati geometrici

X ini.	Y ini.	X fin.	Y fin.	Quota i.	Quota.s	l	Sp.	h netta	h ini.	h fin.	a	a.s.,sx	a.s.,dx
-2.952	-3.169	-5.437	-3.169	L4	L5	2.485	0.28	3.55	3.55	3.55			

Caratteristiche del materiale

(Circolare 7 21-01-19 C8.5.I) Muratura in mattoni pieni e malta di calce LC2_Corti

fb	fk	fvk0	fmedio	τ0	fv0	μ	ϕ	fv,lim	E	G	FC
600000			345000	9000	20000	0.58	0.77	32500	320000000	128000000	1.2

Verifica a pressoflessione nel piano secondo D.M. 17-01-18 NTC §7.8.2.2.1 in combinazioni non sismiche, γM = 3

Comb.	Quota	N	M	σ0	Mu	c.s.	Verifica
SLU 83	7	-19544	2366.7	28088	15909.98	6.722	Si
SLU 83	7.8	-18288	1259.8	26283	15391.09	12.217	Si
SLU 77	7	-19163	2277.43	27541	15759.83	6.92	Si
SLU 77	7.8	-17907	1237.17	25736	15219.95	12.302	Si
SLU 53	7	-17274	2124.12	24827	14921.91	7.025	Si
SLU 53	7.8	-16034	1102.99	23043	14286.14	12.952	Si
SLU 62	7	-17762	2181.63	25528	15153.44	6.946	Si
SLU 62	7.8	-16522	1141.49	23745	14544.22	12.741	Si
SLU 81	7	-19437	2398.46	27935	15868.5	6.616	Si
SLU 81	7.8	-18181	1243.92	26130	15343.72	12.335	Si
SLU 79	7	-18826	2238.99	27057	15621.8	6.977	Si
SLU 79	7.8	-17570	1218.22	25252	15063.37	12.365	Si
SLU 74	7	-19056	2309.19	27387	15716.57	6.806	Si
SLU 74	7.8	-17800	1221.29	25582	15170.8	12.422	Si
SLU 66	7	-17131	2085.32	24621	14851.93	7.122	Si
SLU 66	7.8	-15875	1087.21	22816	14200.17	13.061	Si
SLU 64	7	-16687	2078.65	23983	14629.53	7.038	Si
SLU 64	7.8	-15431	1052.38	22178	13953.33	13.259	Si

Comb.	Quota	N	M	σ0	Mu	c.s.	Verifica
SLU 60	7	-17656	2213.4	25375	15103.61	6.824	Si
SLU 60	7.8	-16415	1125.61	23591	14488.58	12.872	Si

Verifica a pressoflessione nel piano secondo D.M. 17-01-18 NTC §7.8.2.2.1 in combinazioni sismiche, γM = 2

Comb.	Quota	N	M	σ0	Mu	c.s.	Verifica
SLV 12	7	-6661	1679.85	9574	7628.31	4.541	Si
SLV 12	7.8	-5661	2923.55	8137	6565.96	2.246	Si
SLV 16	7	-9974	34.5	14335	10939	317.063	Si
SLV 16	7.8	-8992	7649.28	12924	9991.37	1.306	Si
SLV 13	7	-13553	-317.54	19478	14154.78	44.577	Si
SLV 13	7.8	-12592	7614.02	18097	13327.98	1.75	Si
SLV 14	7	-13553	-317.54	19478	14154.78	44.577	Si
SLV 14	7.8	-12592	7614.02	18097	13327.98	1.75	Si
SLV 1	7	-16016	3210	23017	16150.69	5.031	Si
SLV 1	7.8	-15072	-6005.63	21661	15406.7	2.565	Si
SLV 2	7	-16016	3210	23017	16150.69	5.031	Si
SLV 2	7.8	-15072	-6005.63	21661	15406.7	2.565	Si
SLV 15	7	-9974	34.5	14335	10939	317.063	Si
SLV 15	7.8	-8992	7649.28	12924	9991.37	1.306	Si
SLV 4	7	-12437	3562.03	17875	13192.52	3.704	Si
SLV 4	7.8	-11472	-5970.36	16488	12330.98	2.065	Si
SLV 3	7	-12437	3562.03	17875	13192.52	3.704	Si
SLV 3	7.8	-11472	-5970.36	16488	12330.98	2.065	Si
SLV 11	7	-6661	1679.85	9574	7628.31	4.541	Si
SLV 11	7.8	-5661	2923.55	8137	6565.96	2.246	Si

Verifica a taglio nel piano secondo D.M. 17-01-18 (N.T.C.) §7.8.2.2.2 con rottura per scorrimento in combinazioni non sismiche, γM = 3

Comb.	Quota	N	V par	M	σ0	σN	l'	fvd	Vt scorr.	Vt fess.diag.	Vt,lim	c.s.	Verifica
SLU 81	7	-19437	1436	2398.46		27935	2.485	9280	6457			4.5	Si
SLU 81	7.8	-18181	1436	1243.92		26130	2.485	9040	6290			4.38	Si
SLU 60	7	-17656	1351	2213.4		25375	2.485	8939	6220			4.6	Si
SLU 60	7.8	-16415	1351	1125.61		23591	2.485	8701	6054			4.48	Si
SLU 62	7	-17762	1292	2181.63		25528	2.485	8959	6234			4.83	Si
SLU 62	7.8	-16522	1292	1141.49		23745	2.485	8722	6068			4.7	Si
SLU 77	7	-19163	1293	2277.43		27541	2.485	9228	6421			4.97	Si
SLU 77	7.8	-17907	1293	1237.17		25736	2.485	8987	6253			4.84	Si
SLU 53	7	-17274	1268	2124.12		24827	2.485	8866	6169			4.87	Si
SLU 53	7.8	-16034	1268	1102.99		23043	2.485	8628	6003			4.73	Si
SLU 66	7	-17131	1240	2085.32		24621	2.485	8838	6150			4.96	Si
SLU 66	7.8	-15875	1240	1087.21		22816	2.485	8598	5982			4.82	Si
SLU 64	7	-16687	1275	2078.65		23983	2.485	8753	6091			4.78	Si
SLU 64	7.8	-15431	1275	1052.38		22178	2.485	8513	5923			4.64	Si
SLU 43	7	-14906	1191	1893.58		21423	2.485	8412	5853			4.91	Si
SLU 43	7.8	-13665	1191	934.07		19639	2.485	8174	5688			4.78	Si
SLU 83	7	-19544	1376	2366.7		28088	2.485	9301	6471			4.7	Si
SLU 83	7.8	-18288	1376	1259.8		26283	2.485	9060	6304			4.58	Si
SLU 74	7	-19056	1352	2309.19		27387	2.485	9207	6406			4.74	Si
SLU 74	7.8	-17800	1352	1221.29		25582	2.485	8966	6239			4.61	Si

Verifica a taglio nel piano secondo D.M. 17-01-18 (N.T.C.) §7.8.2.2.2 con rottura per scorrimento in combinazioni sismiche, γM = 2

Comb.	Quota	N	V par	M	σ0	σN	l'	fvd	Vt scorr.	Vt fess.diag.	Vt,lim	c.s.	Verifica
SLV 16	7	-9974	-9364	34.5		14335	2.485	11200	7793			0.83	No, Vu<V
SLV 16	7.8	-8992	-9392	7649.28		27319	1.1756	13797	4542			0.48	No, Vu<V
SLV 15	7	-9974	-9364	34.5		14335	2.485	11200	7793			0.83	No, Vu<V
SLV 15	7.8	-8992	-9392	7649.28		27319	1.1756	13797	4542			0.48	No, Vu<V
SLV 7	7	-7400	5989	2738.11		10636	2.485	10460	7278			1.22	Si
SLV 7	7.8	-6405	5094	-1162.35		9206	2.485	10175	7079			1.39	Si
SLV 13	7	-13553	-10403	-317.54		19478	2.485	12229	8509			0.82	No, Vu<V
SLV 13	7.8	-12592	-9934	7614.02		23502	1.9134	13034	6983			0.7	No, Vu<V
SLV 4	7	-12437	12392	3562.03		17875	2.485	11908	8286			0.67	No, Vu<V
SLV 4	7.8	-11472	11923	-5970.36		18914	2.1663	12116	7349			0.62	No, Vu<V
SLV 14	7	-13553	-10403	-317.54		19478	2.485	12229	8509			0.82	No, Vu<V
SLV 14	7.8	-12592	-9934	7614.02		23502	1.9134	13034	6983			0.7	No, Vu<V
SLV 3	7	-12437	12392	3562.03		17875	2.485	11908	8286			0.67	No, Vu<V
SLV 3	7.8	-11472	11923	-5970.36		18914	2.1663	12116	7349			0.62	No, Vu<V
SLV 8	7	-7400	5989	2738.11		10636	2.485	10460	7278			1.22	Si
SLV 8	7.8	-6405	5094	-1162.35		9206	2.485	10175	7079			1.39	Si
SLV 1	7	-16016	11353	3210		23017	2.485	12937	9001			0.79	No, Vu<V
SLV 1	7.8	-15072	11381	-6005.63		21661	2.485	12665	8813			0.77	No, Vu<V
SLV 2	7	-16016	11353	3210		23017	2.485	12937	9001			0.79	No, Vu<V
SLV 2	7.8	-15072	11381	-6005.63		21661	2.485	12665	8813			0.77	No, Vu<V

Verifica a pressoflessione fuori piano D.M. 17-01-18 (N.T.C.)

quota 6.775 Wa 0.05 denominatore 8 γM = 2

Comb.	fd	Sa	σ0	N	M	Mc	Coeff.s.	Verifica
SLV 7	143750	0.39	9120	-6345	259.49	822.06	3.17	Si
SLV 8	143750	0.39	9120	-6345	259.49	822.06	3.17	Si
SLV 12	143750	0.39	9315	-6481	259.49	838.23	3.23	Si
SLV 11	143750	0.39	9315	-6481	259.49	838.23	3.23	Si
SLV 3	143750	0.39	14699	-10227	259.49	1259.58	4.85	Si
SLV 4	143750	0.39	14699	-10227	259.49	1259.58	4.85	Si
SLV 16	143750	0.39	15350	-10681	259.49	1307.44	5.04	Si
SLV 15	143750	0.39	15350	-10681	259.49	1307.44	5.04	Si
SLV 1	143750	0.39	19676	-13691	259.49	1608.03	6.2	Si
SLV 2	143750	0.39	19676	-13691	259.49	1608.03	6.2	Si

Verifica dei meccanismi locali di collasso con analisi cinematica lineare

forza di aggancio al piano = 0 quota mezzeria = 6.775 Wa = 0.05 Ta = 0.0752

Comb.	N top	N base	V orto	α0	M*	e*	a0*	aLim	Verifica

Comb.	N top	N base	V orto	α0	M*	e*	a0*	aLim	Verifica
SLV 1	-11090	-10302	43	0.043	1480.7	0.935	0.66509	9.20386	No
SLV 2	-11090	-10302	43	0.043	1480.7	0.935	0.66509	9.20386	No
SLV 5	-13926	-15787	103	0.038	1767.9	0.944	0.59236	8.10374	No
SLV 6	-13926	-15787	103	0.038	1767.9	0.944	0.59236	8.10374	No
SLV 12	-5749	-3764	-105	0.037	944.3	0.909	0.59594	8.10374	No
SLV 11	-5749	-3764	-105	0.037	944.3	0.909	0.59594	8.10374	No
SLV 10	-13909	-16628	95	0.039	1766.2	0.944	0.60039	8.10374	No
SLV 9	-13909	-16628	95	0.039	1766.2	0.944	0.60039	8.10374	No
SLV 16	-8585	-9248	-45	0.043	1228.1	0.924	0.68218	9.20386	No
SLV 15	-8585	-9248	-45	0.043	1228.1	0.924	0.68218	9.20386	No

Tabella dei coefficienti di sicurezza minimi

Stato limite	Coeff.s.	Comb.	Verifica
PF_SLU	6.616	SLU 81	Si
V_SLU	4.381	SLU 81	Si
PF_SLV	1.306	SLV 15	Si
V_SLV	0.484	SLV 15	No
PFFP_SLV	3.168	SLV 7	Si
R_SLV	0.072	SLV 1	No

Maschio 155

Verifiche condotte secondo D.M. 17-01-18 (N.T.C.)

Dati geometrici

X ini.	Y ini.	X fin.	Y fin.	Quota i.	Quota.s	l	Sp.	h netta	h ini.	h fin.	a	a.s.,sx	a.s.,dx
-0.117	-3.169	-1.952	-3.169	L4	L5	1.835	0.28	3.55	3.55	3.55			

Caratteristiche del materiale

(Circolare 7 21-01-19 C8.5.I) Muratura in mattoni pieni e malta di calce LC2_Corti

fb	fk	fvk0	fmedio	τ0	fv0	μ	ϕ	fv,lim	E	G	FC
600000			345000	9000	20000	0.58	0.77	32500	320000000	128000000	1.2

Verifica a pressoflessione nel piano secondo D.M. 17-01-18 NTC §7.8.2.2.1 in combinazioni non sismiche, γM = 3

Comb.	Quota	N	M	σ0	Mu	c.s.	Verifica
SLU 75	5.9	-16558	-1640.58	32227	9181.77	5.597	Si
SLU 75	7.8	-17760	2151	34566	9380.25	4.361	Si
SLU 79	5.9	-16129	-1822.3	31391	9095.5	4.991	Si
SLU 79	7.8	-17624	2153.31	34301	9360.94	4.347	Si
SLU 77	5.9	-16338	-1832.27	31799	9138.58	4.988	Si
SLU 77	7.8	-17849	2177.21	34738	9392.41	4.314	Si
SLU 80	5.9	-16567	-1655.13	32244	9183.4	5.548	Si
SLU 80	7.8	-17815	2144.03	34674	9387.9	4.379	Si
SLU 81	5.9	-16264	-1877.33	31655	9123.58	4.86	Si
SLU 81	7.8	-17825	2251.38	34693	9389.27	4.17	Si
SLU 83	5.9	-16482	-1901.85	32079	9167.08	4.82	Si
SLU 83	7.8	-18106	2268.3	35239	9425.69	4.155	Si
SLU 74	5.9	-16120	-1807.75	31375	9093.71	5.03	Si
SLU 74	7.8	-17568	2160.28	34192	9352.82	4.329	Si
SLU 84	5.9	-16920	-1734.68	32931	9248.19	5.331	Si
SLU 84	7.8	-18298	2259.02	35612	9448.59	4.183	Si
SLU 82	5.9	-16702	-1710.16	32507	9208.88	5.385	Si
SLU 82	7.8	-18017	2242.1	35066	9414.53	4.199	Si
SLU 78	5.9	-16776	-1665.1	32651	9222.46	5.539	Si
SLU 78	7.8	-18040	2167.93	35111	9417.47	4.344	Si

Verifica a pressoflessione nel piano secondo D.M. 17-01-18 NTC §7.8.2.2.1 in combinazioni sismiche, γM = 2

Comb.	Quota	N	M	σ0	Mu	c.s.	Verifica
SLV 13	5.9	-14621	-4933.53	28457	10290.79	2.086	Si
SLV 13	7.8	-19121	5404.17	37215	12200.26	2.258	Si
SLV 12	5.9	-4227	-2781.06	8227	3617.14	1.301	Si
SLV 12	7.8	-8460	2506.6	16466	6716.3	2.679	Si
SLV 3	5.9	-7643	2536.81	14876	6158.97	2.428	Si
SLV 3	7.8	-4656	-2558.52	9061	3954.88	1.546	Si
SLV 11	5.9	-4227	-2781.06	8227	3617.14	1.301	Si
SLV 11	7.8	-8460	2506.6	16466	6716.3	2.679	Si
SLV 4	5.9	-7643	2536.81	14876	6158.97	2.428	Si
SLV 4	7.8	-4656	-2558.52	9061	3954.88	1.546	Si
SLV 2	5.9	-12021	2791.2	23396	8917.21	3.195	Si
SLV 2	7.8	-7737	-2497.63	15059	6223.95	2.492	Si
SLV 16	5.9	-10244	-5187.92	19938	7865.32	1.516	Si
SLV 16	7.8	-16040	5343.27	31218	10956.48	2.051	Si
SLV 15	5.9	-10244	-5187.92	19938	7865.32	1.516	Si
SLV 15	7.8	-16040	5343.27	31218	10956.48	2.051	Si
SLV 14	5.9	-14621	-4933.53	28457	10290.79	2.086	Si
SLV 14	7.8	-19121	5404.17	37215	12200.26	2.258	Si
SLV 1	5.9	-12021	2791.2	23396	8917.21	3.195	Si
SLV 1	7.8	-7737	-2497.63	15059	6223.95	2.492	Si

Verifica a taglio nel piano secondo D.M. 17-01-18 (N.T.C.) §7.8.2.2.2 con rottura per scorrimento in combinazioni non sismiche, γM = 3

Comb.	Quota	N	V par	M	σ0	σN	l'	fvd	Vt scorr.	Vt fess.diag.	Vt,lim	c.s.	Verifica
SLU 81	5.9	-16264	-4014	-1877.33		31655	1.835	9776	5023			1.25	Si
SLU 81	7.8	-17825	-4016	2251.38		34693	1.835	10181	5231			1.3	Si
SLU 77	5.9	-16338	-3927	-1832.27		31799	1.835	9795	5033			1.28	Si
SLU 77	7.8	-17849	-3929	2177.21		34738	1.835	10187	5234			1.33	Si
SLU 39	5.9	-13614	-3476	-1632.74		26496	1.835	9088	4670			1.34	Si

Comb.	Quota	N	V par	M	σ0	σN	l'	fvd	Vt scorr.	Vt fess.diag.	Vt,lim	c.s.	Verifica
SLU 39	7.8	-15145	-3477	1965.4		29476	1.835	9486	4874			1.4	Si
SLU 82	5.9	-16702	-3818	-1710.16		32507	1.835	9890	5081			1.33	Si
SLU 82	7.8	-18017	-3791	2242.1		35066	1.835	10231	5257			1.39	Si
SLU 74	5.9	-16120	-3875	-1807.75		31375	1.835	9739	5004			1.29	Si
SLU 74	7.8	-17568	-3877	2160.28		34192	1.835	10115	5197			1.34	Si
SLU 83	5.9	-16482	-4067	-1901.85		32079	1.835	9833	5052			1.24	Si
SLU 83	7.8	-18106	-4068	2268.3		35239	1.835	10254	5269			1.3	Si
SLU 62	5.9	-15141	-3619	-1682.26		29468	1.835	9485	4873			1.35	Si
SLU 62	7.8	-16395	-3620	2001.17		31909	1.835	9810	5040			1.39	Si
SLU 41	5.9	-13832	-3528	-1657.26		26920	1.835	9145	4699			1.33	Si
SLU 41	7.8	-15425	-3529	1982.32		30022	1.835	9559	4911			1.39	Si
SLU 79	5.9	-16129	-3902	-1822.3		31391	1.835	9741	5005			1.28	Si
SLU 79	7.8	-17624	-3903	2153.31		34301	1.835	10129	5204			1.33	Si
SLU 84	5.9	-16920	-3870	-1734.68		32931	1.835	9946	5110			1.32	Si
SLU 84	7.8	-18298	-3843	2259.02		35612	1.835	10304	5294			1.38	Si

Verifica a taglio nel piano secondo D.M. 17-01-18 (N.T.C.) §7.8.2.2.2 con rottura per scorrimento in combinazioni sismiche, γM = 2

Comb.	Quota	N	V par	M	σ0	σN	l'	fvd	Vt scorr.	Vt fess.diag.	Vt,lim	c.s.	Verifica
SLV 12	5.9	-4227	-6560	-2781.06		19386	0.7787	12211	2662			0.41	No, Vu<V
SLV 12	7.8	-8460	-6481	2506.6		16466	1.835	11627	5974			0.92	No, Vu<V
SLV 4	5.9	-7643	3434	2536.81		15538	1.7568	11441	5628			1.64	Si
SLV 4	7.8	-4656	2850	-2558.52		15063	1.1039	11346	3507			1.23	Si
SLV 15	5.9	-10244	-9790	-5187.92		29667	1.2332	14267	4926			0.5	No, Vu<V
SLV 15	7.8	-16040	-9260	5343.27		32676	1.7531	14868	7299			0.79	No, Vu<V
SLV 3	5.9	-7643	3434	2536.81		15538	1.7568	11441	5628			1.64	Si
SLV 3	7.8	-4656	2850	-2558.52		15063	1.1039	11346	3507			1.23	Si
SLV 1	5.9	-12021	4632	2791.2		23396	1.835	13012	6686			1.44	Si
SLV 1	7.8	-7737	4101	-2497.63		15489	1.7841	11431	5710			1.39	Si
SLV 16	5.9	-10244	-9790	-5187.92		29667	1.2332	14267	4926			0.5	No, Vu<V
SLV 16	7.8	-16040	-9260	5343.27		32676	1.7531	14868	7299			0.79	No, Vu<V
SLV 13	5.9	-14621	-8591	-4933.53		30007	1.7403	14335	6985			0.81	No, Vu<V
SLV 13	7.8	-19121	-8010	5404.17		37215	1.835	15776	8106			1.01	Si
SLV 11	5.9	-4227	-6560	-2781.06		19386	0.7787	12211	2662			0.41	No, Vu<V
SLV 11	7.8	-8460	-6481	2506.6		16466	1.835	11627	5974			0.92	No, Vu<V
SLV 14	5.9	-14621	-8591	-4933.53		30007	1.7403	14335	6985			0.81	No, Vu<V
SLV 14	7.8	-19121	-8010	5404.17		37215	1.835	15776	8106			1.01	Si
SLV 2	5.9	-12021	4632	2791.2		23396	1.835	13012	6686			1.44	Si
SLV 2	7.8	-7737	4101	-2497.63		15489	1.7841	11431	5710			1.39	Si

Verifica a pressoflessione fuori piano D.M. 17-01-18 (N.T.C.)

quota 6.775 Wa 0.05 denominatore 8 γM = 2

Comb.	fd	Sa	σ0	N	M	Mc	Coeff.s.	Verifica
SLV 7	143750	0.39	9544	-4904	191.62	632.87	3.3	Si
SLV 8	143750	0.39	9544	-4904	191.62	632.87	3.3	Si
SLV 3	143750	0.39	12347	-6344	191.62	798.41	4.17	Si
SLV 4	143750	0.39	12347	-6344	191.62	798.41	4.17	Si
SLV 12	143750	0.39	14065	-7227	191.62	895.26	4.67	Si
SLV 11	143750	0.39	14065	-7227	191.62	895.26	4.67	Si
SLV 1	143750	0.39	19272	-9902	191.62	1167.6	6.09	Si
SLV 2	143750	0.39	19272	-9902	191.62	1167.6	6.09	Si
SLV 16	143750	0.39	27418	-14087	191.62	1529.67	7.98	Si
SLV 15	143750	0.39	27418	-14087	191.62	1529.67	7.98	Si

Verifica dei meccanismi locali di collasso con analisi cinematica lineare

forza di aggancio al piano = 0 quota mezzeria = 6.775 Wa = 0.05 Ta = 0.0752

Comb.	N top	N base	V orto	α0	M*	e*	a0*	aLim	Verifica
SLV 15	-12110	-14071	-46	0.041	1490.8	0.95	0.62459	9.20386	No
SLV 16	-12110	-14071	-46	0.041	1490.8	0.95	0.62459	9.20386	No
SLV 14	-14433	-18261	-10	0.043	1726.8	0.956	0.65135	9.20386	No
SLV 13	-14433	-18261	-10	0.043	1726.8	0.956	0.65135	9.20386	No
SLV 2	-7452	-8663	44	0.042	1018.9	0.931	0.65181	9.20386	No
SLV 1	-7452	-8663	44	0.042	1018.9	0.931	0.65181	9.20386	No
SLV 6	-12606	-16910	67	0.039	1541.1	0.951	0.60034	8.10374	No
SLV 5	-12606	-16910	67	0.039	1541.1	0.951	0.60034	8.10374	No
SLV 11	-6956	-5824	-69	0.039	968.9	0.928	0.6104	8.10374	No
SLV 12	-6956	-5824	-69	0.039	968.9	0.928	0.6104	8.10374	No

Tabella dei coefficienti di sicurezza minimi

Stato limite	Coeff.s.	Comb.	Verifica
PF_SLU	4.155	SLU 83	Si
V_SLU	1.242	SLU 83	Si
PF_SLV	1.301	SLV 11	Si
V_SLV	0.406	SLV 11	No
PFFP_SLV	3.303	SLV 7	Si
R_SLV	0.068	SLV 15	No

Maschio 156

Verifiche condotte secondo D.M. 17-01-18 (N.T.C.)

Dati geometrici

X ini.	Y ini.	X fin.	Y fin.	Quota i.	Quota.s	l	Sp.	h netta	h ini.	h fin.	a	a.s.,sx	a.s.,dx
-2.958	5.948	-5.088	5.948	L4	L5	2.13	0.28	3.55	3.55	3.55			

Caratteristiche del materiale

(Circolare 7 21-01-19 C8.5.I) Muratura in mattoni pieni e malta di calce LC2_Corti

fb	fk	fvk0	fmedio	τ0	fv0	μ	ϕ	fv,lim	E	G	FC
600000			345000	9000	20000	0.58	0.77	32500	320000000	128000000	1.2

Verifica a pressoflessione nel piano secondo D.M. 17-01-18 NTC §7.8.2.2.1 in combinazioni non sismiche, γM = 3

Comb.	Quota	N	M	σ0	Mu	c.s.	Verifica
SLU 79	5.9	-22381	-1062.52	37527	12855.02	12.099	Si
SLU 79	7.8	-21097	213.26	35374	12711.31	59.605	Si
SLU 72	5.9	-20458	-1042.28	34302	12612.91	12.101	Si
SLU 72	7.8	-18928	262.43	31736	12304.36	46.887	Si
SLU 51	5.9	-18460	-978.17	30952	12189.63	12.462	Si
SLU 51	7.8	-16807	250.13	28181	11707.22	46.804	Si
SLU 77	5.9	-22644	-1056.82	37968	12875.52	12.183	Si
SLU 77	7.8	-21382	213.55	35852	12749.47	59.702	Si
SLU 80	5.9	-22354	-1059.29	37481	12852.69	12.133	Si
SLU 80	7.8	-21055	222.92	35304	12705.43	56.997	Si
SLU 71	5.9	-20486	-1045.5	34349	12617.55	12.068	Si
SLU 71	7.8	-18969	252.77	31806	12314.13	48.717	Si
SLU 50	5.9	-18488	-981.4	30999	12196.69	12.428	Si
SLU 50	7.8	-16849	240.48	28251	11720.87	48.74	Si
SLU 69	5.9	-20749	-1039.8	34790	12659.89	12.175	Si
SLU 69	7.8	-19254	253.06	32284	12378.89	48.916	Si
SLU 70	5.9	-20721	-1036.58	34743	12655.57	12.209	Si
SLU 70	7.8	-19213	262.72	32214	12369.65	47.084	Si
SLU 78	5.9	-22617	-1053.6	37922	12873.5	12.219	Si
SLU 78	7.8	-21340	223.21	35782	12744.11	57.096	Si

Verifica a pressoflessione nel piano secondo D.M. 17-01-18 NTC §7.8.2.2.1 in combinazioni sismiche, γM = 2

Comb.	Quota	N	M	σ0	Mu	c.s.	Verifica
SLV 6	5.9	-5361	2248.63	8988	5289.1	2.352	Si
SLV 6	7.8	-6947	-1675.14	11648	6693.02	3.996	Si
SLV 4	5.9	-9575	3319.2	16054	8857.43	2.669	Si
SLV 4	7.8	-14738	-5290.99	24712	12521.83	2.367	Si
SLV 13	5.9	-20503	-4484.18	34378	15692.2	3.499	Si
SLV 13	7.8	-13348	5343.15	22381	11612	2.173	Si
SLV 16	5.9	-24928	-5398.28	41798	17466.91	3.236	Si
SLV 16	7.8	-17369	5401.55	29124	14089.35	2.608	Si
SLV 1	5.9	-5150	4233.3	8635	5096.85	1.204	Si
SLV 1	7.8	-10717	-5349.39	17970	9735.23	1.82	Si
SLV 2	5.9	-5150	4233.3	8635	5096.85	1.204	Si
SLV 2	7.8	-10717	-5349.39	17970	9735.23	1.82	Si
SLV 5	5.9	-5361	2248.63	8988	5289.1	2.352	Si
SLV 5	7.8	-6947	-1675.14	11648	6693.02	3.996	Si
SLV 3	5.9	-9575	3319.2	16054	8857.43	2.669	Si
SLV 3	7.8	-14738	-5290.99	24712	12521.83	2.367	Si
SLV 15	5.9	-24928	-5398.28	41798	17466.91	3.236	Si
SLV 15	7.8	-17369	5401.55	29124	14089.35	2.608	Si
SLV 14	5.9	-20503	-4484.18	34378	15692.2	3.499	Si
SLV 14	7.8	-13348	5343.15	22381	11612	2.173	Si

Verifica a taglio nel piano secondo D.M. 17-01-18 (N.T.C.) §7.8.2.2.2 con rottura per scorrimento in combinazioni non sismiche, γM = 3

Comb.	Quota	N	V par	M	σ0	σN	I'	fvd	Vt scorr.	Vt fess.diag.	Vt,lim	c.s.	Verifica
SLU 19	5.9	-16607	416	-580.4		27845	2.13	9268	5528			13.3	Si
SLU 19	7.8	-15827	452	-12.93		26538	2.13	9094	5424			12.01	Si
SLU 31	5.9	-17774	395	-635.06		29802	2.13	9529	5683			14.38	Si
SLU 31	7.8	-17008	433	22.73		28518	2.13	9358	5581			12.89	Si
SLU 61	5.9	-20100	461	-726.22		33702	2.13	10049	5993			13	Si
SLU 61	7.8	-18949	505	-6.99		31773	2.13	9792	5840			11.57	Si
SLU 60	5.9	-20127	472	-729.44		33748	2.13	10055	5997			12.71	Si
SLU 60	7.8	-18991	517	-16.65		31843	2.13	9801	5845			11.31	Si
SLU 81	5.9	-22125	524	-793.55		37098	2.13	10502	6263			11.96	Si
SLU 81	7.8	-21111	573	-4.35		35398	2.13	10275	6128			10.69	Si
SLU 82	5.9	-22098	513	-790.32		37052	2.13	10496	6260			12.21	Si
SLU 82	7.8	-21070	561	5.3		35328	2.13	10266	6123			10.92	Si
SLU 73	5.9	-21267	441	-780.88		35659	2.13	10310	6149			13.95	Si
SLU 73	7.8	-20130	486	28.67		33752	2.13	10056	5997			12.35	Si
SLU 40	5.9	-18605	467	-644.5		31195	2.13	9715	5794			12.39	Si
SLU 40	7.8	-17948	508	-0.64		30093	2.13	9568	5706			11.23	Si
SLU 39	5.9	-18632	478	-647.73		31242	2.13	9721	5798			12.12	Si
SLU 39	7.8	-17989	520	-10.3		30163	2.13	9577	5712			10.98	Si
SLU 18	5.9	-16634	427	-583.63		27891	2.13	9274	5531			12.97	Si
SLU 18	7.8	-15869	464	-22.59		26608	2.13	9103	5429			11.7	Si

Verifica a taglio nel piano secondo D.M. 17-01-18 (N.T.C.) §7.8.2.2.2 con rottura per scorrimento in combinazioni sismiche, γM = 2

Comb.	Quota	N	V par	M	σ0	σN	I'	fvd	Vt scorr.	Vt fess.diag.	Vt,lim	c.s.	Verifica
SLV 4	5.9	-9575	8320	3319.2		16054	2.13	11544	6885			0.83	No, Vu<V
SLV 4	7.8	-14738	7825	-5290.99		24852	2.118	13304	7890			1.01	Si
SLV 14	5.9	-20503	-7784	-4484.18		34378	2.13	15209	9071			1.17	Si
SLV 14	7.8	-13348	-7222	5343.15		23906	1.9941	13115	7323			1.01	Si
SLV 5	5.9	-5361	6474	2248.63		9886	1.9366	10311	5591			0.86	No, Vu<V
SLV 5	7.8	-6947	6173	-1675.14		11648	2.13	10663	6359			1.03	Si
SLV 15	5.9	-24928	-9870	-5398.28		41798	2.13	16250	9692			0.98	No, Vu<V
SLV 15	7.8	-17369	-9212	5401.55		29124	2.13	14158	8444			0.92	No, Vu<V
SLV 16	5.9	-24928	-9870	-5398.28		41798	2.13	16250	9692			0.98	No, Vu<V
SLV 16	7.8	-17369	-9212	5401.55		29124	2.13	14158	8444			0.92	No, Vu<V
SLV 13	5.9	-20503	-7784	-4484.18		34378	2.13	15209	9071			1.17	Si
SLV 13	7.8	-13348	-7222	5343.15		23906	1.9941	13115	7323			1.01	Si
SLV 6	5.9	-5361	6474	2248.63		9886	1.9366	10311	5591			0.86	No, Vu<V
SLV 6	7.8	-6947	6173	-1675.14		11648	2.13	10663	6359			1.03	Si
SLV 3	5.9	-9575	8320	3319.2		16054	2.13	11544	6885			0.83	No, Vu<V
SLV 3	7.8	-14738	7825	-5290.99		24852	2.118	13304	7890			1.01	Si

Comb.	Quota	N	V par	M	σ0	σN	l'	fvd	Vt scorr.	Vt fess.diag.	Vt,lim	c.s.	Verifica
SLV 2	5.9	-5150	10407	4233.3		25234	0.7289	13380	2731			0.26	No, Vu<V
SLV 2	7.8	-10717	9815	-5349.39		22547	1.6976	12843	6104			0.62	No, Vu<V
SLV 1	5.9	-5150	10407	4233.3		25234	0.7289	13380	2731			0.26	No, Vu<V
SLV 1	7.8	-10717	9815	-5349.39		22547	1.6976	12843	6104			0.62	No, Vu<V

Verifica a pressoflessione fuori piano D.M. 17-01-18 (N.T.C.)

quota 6.775 Wa 0.05 denominatore 8 γM = 2

Comb.	fd	Sa	σ0	N	M	Mc	Coeff.s.	Verifica
SLV 5	143750	0.39	12132	-7236	222.42	912.4	4.1	Si
SLV 6	143750	0.39	12132	-7236	222.42	912.4	4.1	Si
SLV 2	143750	0.39	15692	-9359	222.42	1141.95	5.13	Si
SLV 1	143750	0.39	15692	-9359	222.42	1141.95	5.13	Si
SLV 10	143750	0.39	15715	-9372	222.42	1143.37	5.14	Si
SLV 9	143750	0.39	15715	-9372	222.42	1143.37	5.14	Si
SLV 3	143750	0.39	22326	-13315	222.42	1523.53	6.85	Si
SLV 4	143750	0.39	22326	-13315	222.42	1523.53	6.85	Si
SLV 14	143750	0.39	27635	-16481	222.42	1785.53	8.03	Si
SLV 13	143750	0.39	27635	-16481	222.42	1785.53	8.03	Si

Verifica dei meccanismi locali di collasso con analisi cinematica lineare

forza di aggancio al piano = 0 quota mezzeria = 6.775 Wa = 0.05 Ta = 0.0752

Comb.	N top	N base	V orto	α0	M*	e*	a0*	aLim	Verifica
SLV 16	-15791	-19437	-80	0.039	1906.6	0.954	0.59633	9.20386	No
SLV 15	-15791	-19437	-80	0.039	1906.6	0.954	0.59633	9.20386	No
SLV 6	-6158	-6560	121	0.034	932.1	0.917	0.53381	8.10374	No
SLV 5	-6158	-6560	121	0.034	932.1	0.917	0.53381	8.10374	No
SLV 2	-7583	-8894	70	0.04	1075.2	0.926	0.62732	9.20386	No
SLV 1	-7583	-8894	70	0.04	1075.2	0.926	0.62732	9.20386	No
SLV 11	-17216	-21771	-131	0.036	2051.4	0.957	0.55412	8.10374	No
SLV 12	-17216	-21771	-131	0.036	2051.4	0.957	0.55412	8.10374	No
SLV 8	-15604	-19799	-107	0.038	1887.6	0.954	0.57329	8.10374	No
SLV 7	-15604	-19799	-107	0.038	1887.6	0.954	0.57329	8.10374	No

Tabella dei coefficienti di sicurezza minimi

Stato limite	Coeff.s.	Comb.	Verifica
PF_SLU	12.068	SLU 71	Si
V_SLU	10.693	SLU 81	Si
PF_SLV	1.204	SLV 1	Si
V_SLV	0.262	SLV 1	No
PFFP_SLV	4.102	SLV 5	Si
R_SLV	0.065	SLV 15	No

Maschio 157

Verifiche condotte secondo D.M. 17-01-18 (N.T.C.)

Dati geometrici

X ini.	Y ini.	X fin.	Y fin.	Quota i.	Quota.s	l	Sp.	h netta	h ini.	h fin.	a	a.s.,sx	a.s.,dx
-0.117	5.948	-1.958	5.948	L4	L5	1.84	0.28	3.55	3.55	3.55			

Caratteristiche del materiale

(Circolare 7 21-01-19 C8.5.I) Muratura in mattoni pieni e malta di calce LC2_Corti

fb	fk	fvk0	fmedio	τ0	fv0	μ	ϕ	fv,lim	E	G	FC
600000			345000	9000	20000	0.58	0.77	32500	320000000	128000000	1.2

Verifica a pressoflessione nel piano secondo D.M. 17-01-18 NTC §7.8.2.2.1 in combinazioni non sismiche, γM = 3

Comb.	Quota	N	M	σ0	Mu	c.s.	Verifica
SLU 76	5.9	-16260	-101.72	31554	9166.54	90.113	Si
SLU 76	7.8	-17470	1874.87	33901	9385.2	5.006	Si
SLU 84	5.9	-16847	-118.54	32693	9280.63	78.288	Si
SLU 84	7.8	-18231	1974.57	35379	9489.95	4.806	Si
SLU 77	5.9	-16993	-161.03	32976	9306.62	57.796	Si
SLU 77	7.8	-18267	1982.64	35449	9494.29	4.789	Si
SLU 75	5.9	-16493	-80.88	32007	9213.69	113.913	Si
SLU 75	7.8	-17671	1875.84	34292	9415.39	5.019	Si
SLU 82	5.9	-16438	-36.86	31900	9202.74	249.647	Si
SLU 82	7.8	-17674	1860.92	34299	9415.86	5.06	Si
SLU 79	5.9	-16820	-180.84	32640	9275.68	51.292	Si
SLU 79	7.8	-18092	1977.12	35109	9472.7	4.791	Si
SLU 83	5.9	-16937	-117.01	32868	9296.88	79.456	Si
SLU 83	7.8	-18270	1967.73	35455	9494.67	4.825	Si
SLU 78	5.9	-16902	-162.56	32800	9290.58	57.15	Si
SLU 78	7.8	-18228	1989.48	35373	9489.56	4.77	Si
SLU 80	5.9	-16729	-182.38	32464	9258.96	50.768	Si
SLU 80	7.8	-18053	1983.96	35033	9467.67	4.772	Si
SLU 74	5.9	-16584	-79.35	32182	9231.34	116.344	Si
SLU 74	7.8	-17711	1869	34369	9421.08	5.041	Si

Verifica a pressoflessione nel piano secondo D.M. 17-01-18 NTC §7.8.2.2.1 in combinazioni sismiche, γM = 2

Comb.	Quota	N	M	σ0	Mu	c.s.	Verifica
SLV 1	5.9	-5629	3679.16	10923	4716.47	1.282	Si
SLV 1	7.8	-1949	-3264.33	0	0	0	No, e>l/2
SLV 16	5.9	-17221	-3643.08	33419	11512.5	3.16	Si
SLV 16	7.8	-21744	5611.95	42196	13098.87	2.334	Si
SLV 13	5.9	-12018	-3802	23322	8948.09	2.354	Si

Comb.	Quota	N	M	σ0	Mu	c.s.	Verifica
SLV 13	7.8	-17543	5276.82	34044	11645.25	2.207	Si
SLV 6	5.9	-1795	875.35	3483	1604.59	1.833	Si
SLV 6	7.8	-2506	-665.9	4863	2214.04	3.325	Si
SLV 15	5.9	-17221	-3643.08	33419	11512.5	3.16	Si
SLV 15	7.8	-21744	5611.95	42196	13098.87	2.334	Si
SLV 3	5.9	-10832	3838.08	21020	8252.54	2.15	Si
SLV 3	7.8	-6149	-2929.21	11933	5106.02	1.743	Si
SLV 14	5.9	-12018	-3802	23322	8948.09	2.354	Si
SLV 14	7.8	-17543	5276.82	34044	11645.25	2.207	Si
SLV 4	5.9	-10832	3838.08	21020	8252.54	2.15	Si
SLV 4	7.8	-6149	-2929.21	11933	5106.02	1.743	Si
SLV 2	5.9	-5629	3679.16	10923	4716.47	1.282	Si
SLV 2	7.8	-1949	-3264.33	0	0	0	No, e>l/2
SLV 5	5.9	-1795	875.35	3483	1604.59	1.833	Si
SLV 5	7.8	-2506	-665.9	4863	2214.04	3.325	Si

Verifica a taglio nel piano secondo D.M. 17-01-18 (N.T.C.) §7.8.2.2.2 con rottura per scorrimento in combinazioni non sismiche, γM = 3

Comb.	Quota	N	V par	M	σ0	σN	l'	fvd	Vt scorr.	Vt fess.diag.	Vt,lim	c.s.	Verifica
SLU 77	5.9	-16993	-2839	-161.03		32976	1.8404	9952	5129			1.81	Si
SLU 77	7.8	-18267	-2841	1982.64		35449	1.8404	10282	5298			1.87	Si
SLU 80	5.9	-16729	-2876	-182.38		32464	1.8404	9884	5093			1.77	Si
SLU 80	7.8	-18053	-2875	1983.96		35033	1.8404	10227	5270			1.83	Si
SLU 83	5.9	-16937	-2836	-117.01		32868	1.8404	9938	5121			1.81	Si
SLU 83	7.8	-18270	-2838	1967.73		35455	1.8404	10283	5299			1.87	Si
SLU 36	5.9	-14147	-2569	-193.68		27453	1.8404	9216	4749			1.85	Si
SLU 36	7.8	-15571	-2568	1764.64		30217	1.8404	9585	4939			1.92	Si
SLU 79	5.9	-16820	-2845	-180.84		32640	1.8404	9908	5105			1.79	Si
SLU 79	7.8	-18092	-2847	1977.12		35109	1.8404	10237	5275			1.85	Si
SLU 76	5.9	-16260	-2722	-101.72		31554	1.8404	9763	5031			1.85	Si
SLU 76	7.8	-17470	-2719	1874.87		33901	1.8404	10076	5192			1.91	Si
SLU 42	5.9	-14092	-2567	-149.66		27346	1.8404	9202	4742			1.85	Si
SLU 42	7.8	-15574	-2565	1749.72		30223	1.8404	9585	4939			1.93	Si
SLU 38	5.9	-13974	-2576	-213.49		27117	1.8404	9171	4726			1.83	Si
SLU 38	7.8	-15396	-2574	1759.11		29877	1.8404	9539	4916			1.91	Si
SLU 84	5.9	-16847	-2867	-118.54		32693	1.8404	9915	5109			1.78	Si
SLU 84	7.8	-18231	-2866	1974.57		35379	1.8404	10273	5294			1.85	Si
SLU 78	5.9	-16902	-2870	-162.56		32800	1.8404	9929	5116			1.78	Si
SLU 78	7.8	-18228	-2868	1989.48		35373	1.8404	10272	5293			1.85	Si

Verifica a taglio nel piano secondo D.M. 17-01-18 (N.T.C.) §7.8.2.2.2 con rottura per scorrimento in combinazioni sismiche, γM = 2

Comb.	Quota	N	V par	M	σ0	σN	l'	fvd	Vt scorr.	Vt fess.diag.	Vt,lim	c.s.	Verifica
SLV 6	5.9	-1795	2327	875.35		4940	1.2975	9321	3387			1.46	Si
SLV 6	7.8	-2506	508	-665.9		4863	1.8404	9306	4795			9.44	Si
SLV 5	5.9	-1795	2327	875.35		4940	1.2975	9321	3387			1.46	Si
SLV 5	7.8	-2506	508	-665.9		4863	1.8404	9306	4795			9.44	Si
SLV 1	5.9	-5629	5721	3679.16		25139	0.7997	13361	2992			0.52	No, Vu<V
SLV 1	7.8	-1949	4600	-3264.33		0	0	8333	0			0	No, Vu<V
SLV 14	5.9	-12018	-7859	-3802		23694	1.8115	13072	6630			0.84	No, Vu<V
SLV 14	7.8	-17543	-7717	5276.82		34044	1.8404	15142	7803			1.01	Si
SLV 4	5.9	-10832	4557	3838.08		22788	1.6976	12891	6127			1.34	Si
SLV 4	7.8	-6149	4413	-2929.21		16493	1.3316	11632	4337			0.98	No, Vu<V
SLV 16	5.9	-17221	-9023	-3643.08		33419	1.8404	15017	7738			0.86	No, Vu<V
SLV 16	7.8	-21744	-7904	5611.95		42196	1.8404	16250	8374			1.06	Si
SLV 13	5.9	-12018	-7859	-3802		23694	1.8115	13072	6630			0.84	No, Vu<V
SLV 13	7.8	-17543	-7717	5276.82		34044	1.8404	15142	7803			1.01	Si
SLV 15	5.9	-17221	-9023	-3643.08		33419	1.8404	15017	7738			0.86	No, Vu<V
SLV 15	7.8	-21744	-7904	5611.95		42196	1.8404	16250	8374			1.06	Si
SLV 2	5.9	-5629	5721	3679.16		25139	0.7997	13361	2992			0.52	No, Vu<V
SLV 2	7.8	-1949	4600	-3264.33		0	0	8333	0			0	No, Vu<V
SLV 3	5.9	-10832	4557	3838.08		22788	1.6976	12891	6127			1.34	Si
SLV 3	7.8	-6149	4413	-2929.21		16493	1.3316	11632	4337			0.98	No, Vu<V

Verifica a pressoflessione fuori piano D.M. 17-01-18 (N.T.C.)

quota 6.775 Wa 0.05 denominatore 8 γM = 2

Comb.	fd	Sa	σ0	N	M	Mc	Coeff.s.	Verifica
SLV 6	143750	0.39	5808	-2993	192.18	399.09	2.08	Si
SLV 5	143750	0.39	5808	-2993	192.18	399.09	2.08	Si
SLV 2	143750	0.39	7797	-4018	192.18	526.61	2.74	Si
SLV 1	143750	0.39	7797	-4018	192.18	526.61	2.74	Si
SLV 10	143750	0.39	12689	-6539	192.18	820.39	4.27	Si
SLV 9	143750	0.39	12689	-6539	192.18	820.39	4.27	Si
SLV 3	143750	0.39	16383	-8443	192.18	1023.48	5.33	Si
SLV 4	143750	0.39	16383	-8443	192.18	1023.48	5.33	Si
SLV 13	143750	0.39	30735	-15838	192.18	1659.59	8.64	Si
SLV 14	143750	0.39	30735	-15838	192.18	1659.59	8.64	Si

Verifica dei meccanismi locali di collasso con analisi cinematica lineare

forza di aggancio al piano = 0 quota mezzeria = 6.775 Wa = 0.05 Ta = 0.0752

Comb.	N top	N base	V orto	α0	M*	e*	a0*	aLim	Verifica
SLV 15	-16473	-19101	-41	0.041	1935	0.96	0.61663	9.20386	No
SLV 16	-16473	-19101	-41	0.041	1935	0.96	0.61663	9.20386	No
SLV 13	-13492	-14337	-7	0.043	1631.9	0.954	0.65954	9.20386	No
SLV 14	-13492	-14337	-7	0.043	1631.9	0.954	0.65954	9.20386	No
SLV 11	-16360	-20364	-64	0.039	1923.4	0.96	0.59766	8.10374	No
SLV 12	-16360	-20364	-64	0.039	1923.4	0.96	0.59766	8.10374	No
SLV 7	-13281	-16682	-49	0.04	1610.5	0.953	0.61736	8.10374	No
SLV 8	-13281	-16682	-49	0.04	1610.5	0.953	0.61736	8.10374	No
SLV 1	-3230	-2064	43	0.044	598	0.899	0.70984	9.20386	No
SLV 2	-3230	-2064	43	0.044	598	0.899	0.70984	9.20386	No

Tabella dei coefficienti di sicurezza minimi

Stato limite	Coeff.s.	Comb.	Verifica
PF_SLU	4.77	SLU 78	Si
V_SLU	1.771	SLU 80	Si
PF_SLV	0	SLV 1	No
V_SLV	0	SLV 1	No
PFFP_SLV	2.077	SLV 5	Si
R_SLV	0.067	SLV 15	No

Maschio 158

Verifiche condotte secondo D.M. 17-01-18 (N.T.C.)

Dati geometrici

X ini.	Y ini.	X fin.	Y fin.	Quota i.	Quota.s	l	Sp.	h netta	h ini.	h fin.	a	a.s.,sx	a.s.,dx
-0.117	-3.169	-0.117	0.001	L4	L5	3.17	0.28	3.55	3.55	3.55			

Caratteristiche del materiale

(Circolare 7 21-01-19 C8.5.I) Muratura in mattoni pieni e malta di calce LC2_Corti

fb	fk	fvk0	fmedio	τ0	fv0	μ	ϕ	fv,lim	E	G	FC
600000			345000	9000	20000	0.58	0.77	32500	320000000	128000000	1.2

Verifica a pressoflessione nel piano secondo D.M. 17-01-18 NTC §7.8.2.2.1 in combinazioni non sismiche, γM = 3

Comb.	Quota	N	M	σ0	Mu	c.s.	Verifica
SLU 80	5	-48028	2979.67	54110	25557.58	8.577	Si
SLU 80	7.8	-37004	7312.31	41690	28633.7	3.916	Si
SLU 76	5	-47183	2662.44	53158	25981.61	9.759	Si
SLU 76	7.8	-36483	7358.13	41104	28647.24	3.893	Si
SLU 81	5	-48703	2931.21	54871	25195.6	8.596	Si
SLU 81	7.8	-37222	7487.42	41935	28624.53	3.823	Si
SLU 75	5	-47832	2832.18	53889	25658.54	9.06	Si
SLU 75	7.8	-36871	7366.8	41541	28638.29	3.887	Si
SLU 83	5	-49378	3073.67	55631	24814.63	8.073	Si
SLU 83	7.8	-37810	7534.99	42598	28589.31	3.794	Si
SLU 78	5	-48506	2974.64	54649	25303.33	8.506	Si
SLU 78	7.8	-37460	7414.37	42204	28612.11	3.859	Si
SLU 82	5	-48448	2669.05	54583	25334.7	9.492	Si
SLU 82	7.8	-37323	7627.51	42050	28619.55	3.752	Si
SLU 84	5	-49122	2811.51	55343	24961.27	8.878	Si
SLU 84	7.8	-37912	7675.07	42713	28581.71	3.724	Si
SLU 77	5	-48762	3236.8	54937	25163.59	7.774	Si
SLU 77	7.8	-37359	7274.28	42090	28617.7	3.934	Si
SLU 73	5	-46509	2519.98	52399	26297.72	10.436	Si
SLU 73	7.8	-35895	7310.56	40440	28648.22	3.919	Si

Verifica a pressoflessione nel piano secondo D.M. 17-01-18 NTC §7.8.2.2.1 in combinazioni sismiche, γM = 2

Comb.	Quota	N	M	σ0	Mu	c.s.	Verifica
SLV 12	5	-30532	11319.78	34399	34769.4	3.072	Si
SLV 12	7.8	-16988	1545.8	19139	22707.91	14.69	Si
SLV 6	5	-35892	-6717.71	40437	38061.62	5.666	Si
SLV 6	7.8	-33086	8026.17	37276	36442.71	4.54	Si
SLV 13	5	-49575	1568.97	55853	42658.2	27.189	Si
SLV 13	7.8	-36570	8749.92	41202	38418.49	4.391	Si
SLV 14	5	-49575	1568.97	55853	42658.2	27.189	Si
SLV 14	7.8	-36570	8749.92	41202	38418.49	4.391	Si
SLV 5	5	-35892	-6717.71	40437	38061.62	5.666	Si
SLV 5	7.8	-33086	8026.17	37276	36442.71	4.54	Si
SLV 10	5	-44456	-5631.35	50086	41579.38	7.384	Si
SLV 10	7.8	-38105	9673.08	42931	39176.23	4.05	Si
SLV 8	5	-21968	10233.42	24750	27766.02	2.713	Si
SLV 8	7.8	-11968	-101.11	13484	16876.05	166.913	Si
SLV 7	5	-21968	10233.42	24750	27766.02	2.713	Si
SLV 7	7.8	-11968	-101.11	13484	16876.05	166.913	Si
SLV 11	5	-30532	11319.78	34399	34769.4	3.072	Si
SLV 11	7.8	-16988	1545.8	19139	22707.91	14.69	Si
SLV 9	5	-44456	-5631.35	50086	41579.38	7.384	Si
SLV 9	7.8	-38105	9673.08	42931	39176.23	4.05	Si

Verifica a taglio nel piano secondo D.M. 17-01-18 (N.T.C.) §7.8.2.2.2 con rottura per scorrimento in combinazioni non sismiche, γM = 3

Comb.	Quota	N	V par	M	σ0	σN	l'	fvd	Vt scorr.	Vt fess.diag.	Vt,lim	c.s.	Verifica
SLU 58	5	-44206	1630	3230.45		49805	3.17	10833	9616			5.9	Si
SLU 58	7.8	-33458	1630	6285.03		37695	3.17	10582	9392			5.76	Si
SLU 50	5	-40079	1633	3290.41		45155	3.17	10833	9616			5.89	Si
SLU 50	7.8	-29968	1632	5327.59		33763	3.17	10057	8927			5.47	Si
SLU 71	5	-44156	1640	3301.8		49747	3.17	10833	9616			5.86	Si
SLU 71	7.8	-33413	1640	6214.77		37644	3.17	10575	9386			5.72	Si
SLU 56	5	-44685	1605	3225.41		50344	3.17	10833	9616			5.99	Si
SLU 56	7.8	-33914	1604	6387.1		38208	3.17	10650	9453			5.89	Si
SLU 45	5	-39884	1525	3142.92		44934	3.17	10833	9616			6.3	Si
SLU 45	7.8	-29835	1525	5382.08		33613	3.17	10037	8909			5.84	Si
SLU 43	5	-38731	1468	3005.49		43636	3.17	10833	9616			6.55	Si
SLU 43	7.8	-28791	1468	5232.45		32437	3.17	9880	8770			5.98	Si
SLU 48	5	-40558	1608	3285.38		45694	3.17	10833	9616			5.98	Si
SLU 48	7.8	-30423	1607	5429.65		34276	3.17	10126	8988			5.59	Si
SLU 79	5	-48283	1637	3241.83		54397	3.17	10833	9616			5.87	Si
SLU 79	7.8	-36903	1637	7172.22		41576	3.17	10833	9616			5.87	Si
SLU 77	5	-48762	1612	3236.8		54937	3.17	10833	9616			5.96	Si

Comb.	Quota	N	V par	M	σ0	σN	l'	fvd	Vt scorr.	Vt fess.diag.	Vt,lim	c.s.	Verifica
SLU 77	7.8	-37359	1612	7274.28		42090	3.17	10833	9616			5.97	Si
SLU 69	5	-44634	1615	3296.76		50287	3.17	10833	9616			5.95	Si
SLU 69	7.8	-33868	1615	6316.84		38157	3.17	10643	9447			5.85	Si

Verifica a taglio nel piano secondo D.M. 17-01-18 (N.T.C.) §7.8.2.2.2 con rottura per scorrimento in combinazioni sismiche, γM = 2

Comb.	Quota	N	V par	M	σ0	σN	l'	fvd	Vt scorr.	Vt fess.diag.	Vt,lim	c.s.	Verifica
SLV 12	5	-30532	8294	11319.78		34399	3.17	15213	13503			1.63	Si
SLV 12	7.8	-16988	8201	1545.8		19139	3.17	12161	10794			1.32	Si
SLV 6	5	-35892	-6029	-6717.71		40437	3.17	16250	14423			2.39	Si
SLV 6	7.8	-33086	-5936	8026.17		37276	3.17	15788	14014			2.36	Si
SLV 2	5	-21027	-3364	-2052.23		23689	3.17	13071	11602			3.45	Si
SLV 2	7.8	-19838	-3728	3260.24		22351	3.17	12803	11364			3.05	Si
SLV 11	5	-30532	8294	11319.78		34399	3.17	15213	13503			1.63	Si
SLV 11	7.8	-16988	8201	1545.8		19139	3.17	12161	10794			1.32	Si
SLV 15	5	-45397	5629	6654.31		51146	3.17	16250	14423			2.56	Si
SLV 15	7.8	-30235	5992	6311.73		34064	3.17	15146	13444			2.24	Si
SLV 8	5	-21968	6746	10233.42		24750	3.17	13283	11790			1.75	Si
SLV 8	7.8	-11968	6394	-101.11		13484	3.17	11030	9790			1.53	Si
SLV 5	5	-35892	-6029	-6717.71		40437	3.17	16250	14423			2.39	Si
SLV 5	7.8	-33086	-5936	8026.17		37276	3.17	15788	14014			2.36	Si
SLV 1	5	-21027	-3364	-2052.23		23689	3.17	13071	11602			3.45	Si
SLV 1	7.8	-19838	-3728	3260.24		22351	3.17	12803	11364			3.05	Si
SLV 16	5	-45397	5629	6654.31		51146	3.17	16250	14423			2.56	Si
SLV 16	7.8	-30235	5992	6311.73		34064	3.17	15146	13444			2.24	Si
SLV 7	5	-21968	6746	10233.42		24750	3.17	13283	11790			1.75	Si
SLV 7	7.8	-11968	6394	-101.11		13484	3.17	11030	9790			1.53	Si

Verifica a pressoflessione fuori piano D.M. 17-01-18 (N.T.C.)

quota 6.775 Wa 0.05 denominatore 8 γM = 2

Comb.	fd	Sa	σ0	N	M	Mc	Coeff.s.	Verifica
SLV 3	143750	0.39	16143	-14328	331.02	1740.92	5.26	Si
SLV 4	143750	0.39	16143	-14328	331.02	1740.92	5.26	Si
SLV 7	143750	0.39	16525	-14668	331.02	1775.76	5.36	Si
SLV 8	143750	0.39	16525	-14668	331.02	1775.76	5.36	Si
SLV 2	143750	0.39	22837	-20270	331.02	2307.42	6.97	Si
SLV 1	143750	0.39	22837	-20270	331.02	2307.42	6.97	Si
SLV 12	143750	0.39	23548	-20901	331.02	2362.21	7.14	Si
SLV 11	143750	0.39	23548	-20901	331.02	2362.21	7.14	Si
SLV 5	143750	0.39	38840	-34474	331.02	3292.22	9.95	Si
SLV 6	143750	0.39	38840	-34474	331.02	3292.22	9.95	Si

Verifica dei meccanismi locali di collasso con analisi cinematica lineare

forza di aggancio al piano = 0 quota mezzeria = 6.775 Wa = 0.05 Ta = 0.0752

Comb.	N top	N base	V orto	α0	M*	e*	a0*	aLim	Verifica
SLV 14	-29557	-49575	5	0.043	3453.2	0.962	0.64609	9.20386	No
SLV 13	-29557	-49575	5	0.043	3453.2	0.962	0.64609	9.20386	No
SLV 16	-24388	-45397	-21	0.043	2927.6	0.955	0.65044	9.20386	No
SLV 15	-24388	-45397	-21	0.043	2927.6	0.955	0.65044	9.20386	No
SLV 2	-16829	-21027	20	0.044	2160.3	0.942	0.68037	9.20386	No
SLV 1	-16829	-21027	20	0.044	2160.3	0.942	0.68037	9.20386	No
SLV 10	-31132	-44456	40	0.042	3613.4	0.963	0.62685	8.10374	No
SLV 9	-31132	-44456	40	0.042	3613.4	0.963	0.62685	8.10374	No
SLV 5	-27314	-35892	45	0.042	3225	0.959	0.63115	8.10374	No
SLV 6	-27314	-35892	45	0.042	3225	0.959	0.63115	8.10374	No

Tabella dei coefficienti di sicurezza minimi

Stato limite	Coeff.s.	Comb.	Verifica
PF_SLU	3.724	SLU 84	Si
V_SLU	5.468	SLU 50	Si
PF_SLV	2.713	SLV 7	Si
V_SLV	1.316	SLV 11	Si
PFFP_SLV	5.259	SLV 3	Si
R_SLV	0.07	SLV 13	No

Maschio 159

Verifiche condotte secondo D.M. 17-01-18 (N.T.C.)

Dati geometrici

X ini.	Y ini.	X fin.	Y fin.	Quota i.	Quota.s	l	Sp.	h netta	h ini.	h fin.	a	a.s.,sx	a.s.,dx
-0.117	1.001	-0.117	5.948	L4	L5	4.947	0.28	3.55	3.55	3.55			

Caratteristiche del materiale

(Circolare 7 21-01-19 C8.5.I) Muratura in mattoni pieni e malta di calce LC2_Corti

fb	fk	fvk0	fmedio	τ0	fv0	μ	ϕ	fv,lim	E	G	FC
600000			345000	9000	20000	0.58	0.77	32500	320000000	128000000	1.2

Verifica a pressoflessione nel piano secondo D.M. 17-01-18 NTC §7.8.2.2.1 in combinazioni non sismiche, γM = 3

Comb.	Quota	N	M	σ0	Mu	c.s.	Verifica
SLU 77	5	-73238	-17935.76	52870	63581.4	3.545	Si
SLU 77	7.8	-48998	-3627.44	35371	68574.51	18.904	Si
SLU 82	5	-72062	-18907.33	52021	64418.34	3.407	Si
SLU 82	7.8	-47692	-3559.76	34428	68112.03	19.134	Si
SLU 81	5	-72385	-18627.17	52254	64194.7	3.446	Si
SLU 81	7.8	-47976	-3828.67	34633	68218.9	17.818	Si

Comb.	Quota	N	M	σ0	Mu	c.s.	Verifica
SLU 74	5	-71785	-17945.92	51821	64606.7	3.6	Si
SLU 74	7.8	-47898	-3742.94	34577	68190.12	18.218	Si
SLU 80	5	-72268	-17960.42	52169	64276.66	3.579	Si
SLU 80	7.8	-48184	-3277.03	34783	68295	20.84	Si
SLU 84	5	-73516	-18897.17	53070	63375.39	3.354	Si
SLU 84	7.8	-48791	-3444.26	35222	68506.38	19.89	Si
SLU 83	5	-73838	-18617	53303	63131.18	3.391	Si
SLU 83	7.8	-49075	-3713.17	35427	68599.56	18.475	Si
SLU 78	5	-72916	-18215.92	52637	63817.13	3.503	Si
SLU 78	7.8	-48714	-3358.54	35166	68480.36	20.39	Si
SLU 75	5	-71462	-18226.08	51588	64821.86	3.557	Si
SLU 75	7.8	-47614	-3474.03	34372	68082.29	19.597	Si
SLU 76	5	-70599	-18157.35	50965	65374.88	3.6	Si
SLU 76	7.8	-46895	-3213.26	33853	67793.09	21.098	Si

Verifica a pressoflessione nel piano secondo D.M. 17-01-18 NTC §7.8.2.2.1 in combinazioni sismiche, γM = 2

Comb.	Quota	N	M	σ0	Mu	c.s.	Verifica
SLV 10	5	-45300	-34445.73	32702	82066.37	2.382	Si
SLV 10	7.8	-26101	-4626.44	18842	54608	11.803	Si
SLV 5	5	-29946	-32927.79	21617	60969.8	1.852	Si
SLV 5	7.8	-18005	-4093.77	12998	39800.2	9.722	Si
SLV 9	5	-45300	-34445.73	32702	82066.37	2.382	Si
SLV 9	7.8	-26101	-4626.44	18842	54608	11.803	Si
SLV 8	5	-53023	10173.3	38276	90072.67	8.854	Si
SLV 8	7.8	-39421	-1016.79	28458	74803.07	73.568	Si
SLV 6	5	-29946	-32927.79	21617	60969.8	1.852	Si
SLV 6	7.8	-18005	-4093.77	12998	39800.2	9.722	Si
SLV 7	5	-53023	10173.3	38276	90072.67	8.854	Si
SLV 7	7.8	-39421	-1016.79	28458	74803.07	73.568	Si
SLV 13	5	-71290	-21131.27	51464	102072.48	4.83	Si
SLV 13	7.8	-43041	-4170.95	31071	79395.42	19.035	Si
SLV 2	5	-20109	-16071.48	14517	43833.44	2.727	Si
SLV 2	7.8	-16055	-2395.38	11590	35948.46	15.007	Si
SLV 14	5	-71290	-21131.27	51464	102072.48	4.83	Si
SLV 14	7.8	-43041	-4170.95	31071	79395.42	19.035	Si
SLV 1	5	-20109	-16071.48	14517	43833.44	2.727	Si
SLV 1	7.8	-16055	-2395.38	11590	35948.46	15.007	Si

Verifica a taglio nel piano secondo D.M. 17-01-18 (N.T.C.) §7.8.2.2.2 con rottura per scorrimento in combinazioni non sismiche, γM = 3

Comb.	Quota	N	V par	M	σ0	σN	I'	fvd	Vt scorr.	Vt fess.diag.	Vt,lim	c.s.	Verifica
SLU 55	5	-64255	-2128	-16181.63		46385	4.9473	10833	15007			7.05	Si
SLU 55	7.8	-42783	-2163	-3097.88		30885	4.9473	9674	13400			6.2	Si
SLU 52	5	-62802	-2047	-16191.8		45336	4.9473	10833	15007			7.33	Si
SLU 52	7.8	-41684	-2082	-3213.38		30091	4.9473	9568	13254			6.37	Si
SLU 51	5	-59621	-1977	-13822.64		43040	4.9473	10833	15007			7.59	Si
SLU 51	7.8	-40088	-2001	-3040.95		28939	4.9473	9414	13041			6.52	Si
SLU 47	5	-57953	-2122	-14019.58		41835	4.9473	10833	15007			7.07	Si
SLU 47	7.8	-38799	-2156	-2977.18		28009	4.9473	9290	12869			5.97	Si
SLU 68	5	-64296	-2136	-15995.3		46415	4.9473	10833	15007			7.03	Si
SLU 68	7.8	-42910	-2171	-3092.56		30977	4.9473	9686	13417			6.18	Si
SLU 76	5	-70599	-2142	-18157.35		50965	4.9473	10833	15007			7.01	Si
SLU 76	7.8	-46895	-2177	-3213.26		33853	4.9473	10069	13948			6.41	Si
SLU 44	5	-56499	-2042	-14029.74		40786	4.9473	10833	15007			7.35	Si
SLU 44	7.8	-37699	-2076	-3092.68		27215	4.9473	9184	12722			6.13	Si
SLU 5	5	-46463	-1785	-11410.78		33541	4.9473	10028	13891			7.78	Si
SLU 5	7.8	-31074	-1817	-2190.49		22432	4.9473	8547	11839			6.51	Si
SLU 65	5	-62843	-2056	-16005.46		45366	4.9473	10833	15007			7.3	Si
SLU 65	7.8	-41811	-2090	-3208.06		30183	4.9473	9580	13271			6.35	Si
SLU 73	5	-69146	-2061	-18167.52		49916	4.9473	10833	15007			7.28	Si
SLU 73	7.8	-45795	-2097	-3328.76		33059	4.9473	9963	13802			6.58	Si

Verifica a taglio nel piano secondo D.M. 17-01-18 (N.T.C.) §7.8.2.2.2 con rottura per scorrimento in combinazioni sismiche, γM = 2

Comb.	Quota	N	V par	M	σ0	σN	I'	fvd	Vt scorr.	Vt fess.diag.	Vt,lim	c.s.	Verifica
SLV 9	5	-45300	-14135	-34445.73		32702	4.9473	14874	20604			1.46	Si
SLV 9	7.8	-26101	-13874	-4626.44		18842	4.9473	12102	16764			1.21	Si
SLV 14	5	-71290	-6687	-21131.27		51464	4.9473	16250	22510			3.37	Si
SLV 14	7.8	-43041	-7086	-4170.95		31071	4.9473	14548	20152			2.84	Si
SLV 11	5	-68377	10759	8655.37		49361	4.9473	16250	22510			2.09	Si
SLV 11	7.8	-47517	10173	-1549.46		34302	4.9473	15194	21047			2.07	Si
SLV 8	5	-53023	11844	10173.3		38276	4.9473	15989	22148			1.87	Si
SLV 8	7.8	-39421	11570	-1016.79		28458	4.9473	14025	19428			1.68	Si
SLV 10	5	-45300	-14135	-34445.73		32702	4.9473	14874	20604			1.46	Si
SLV 10	7.8	-26101	-13874	-4626.44		18842	4.9473	12102	16764			1.21	Si
SLV 13	5	-71290	-6687	-21131.27		51464	4.9473	16250	22510			3.37	Si
SLV 13	7.8	-43041	-7086	-4170.95		31071	4.9473	14548	20152			2.84	Si
SLV 7	5	-53023	11844	10173.3		38276	4.9473	15989	22148			1.87	Si
SLV 7	7.8	-39421	11570	-1016.79		28458	4.9473	14025	19428			1.68	Si
SLV 5	5	-29946	-13051	-32927.79		25944	4.1222	13522	15608			1.2	Si
SLV 5	7.8	-18005	-12477	-4093.77		12998	4.9473	10933	15145			1.21	Si
SLV 6	5	-29946	-13051	-32927.79		25944	4.1222	13522	15608			1.2	Si
SLV 6	7.8	-18005	-12477	-4093.77		12998	4.9473	10933	15145			1.21	Si
SLV 12	5	-68377	10759	8655.37		49361	4.9473	16250	22510			2.09	Si
SLV 12	7.8	-47517	10173	-1549.46		34302	4.9473	15194	21047			2.07	Si

Verifica a pressoflessione fuori piano D.M. 17-01-18 (N.T.C.)

quota 6.775 Wa 0.05 denominatore 8 γM = 2

Comb.	fd	Sa	σ0	N	M	Mc	Coeff.s.	Verifica
SLV 1	143750	0.39	12610	-17468	516.62	2193.11	4.25	Si
SLV 2	143750	0.39	12610	-17468	516.62	2193.11	4.25	Si

Comb.	fd	Sa	σ0	N	M	Mc	Coeff.s.	Verifica
SLV 5	143750	0.39	15854	-21962	516.62	2675.7	5.18	Si
SLV 6	143750	0.39	15854	-21962	516.62	2675.7	5.18	Si
SLV 3	143750	0.39	17140	-23744	516.62	2857.81	5.53	Si
SLV 4	143750	0.39	17140	-23744	516.62	2857.81	5.53	Si
SLV 9	143750	0.39	23165	-32089	516.62	3640.8	7.05	Si
SLV 10	143750	0.39	23165	-32089	516.62	3640.8	7.05	Si
SLV 7	143750	0.39	30956	-42881	516.62	4482.45	8.68	Si
SLV 8	143750	0.39	30956	-42881	516.62	4482.45	8.68	Si

Verifica dei meccanismi locali di collasso con analisi cinematica lineare

forza di aggancio al piano = 0 quota mezzeria = 6.775 Wa = 0.05 Ta = 0.0752

Comb.	N top	N base	V orto	α0	M*	e*	a0*	aLim	Verifica
SLV 15	-42046	-78213	1	0.043	4974.1	0.959	0.65439	9.20386	No
SLV 16	-42046	-78213	1	0.043	4974.1	0.959	0.65439	9.20386	No
SLV 14	-36429	-71290	30	0.043	4403.1	0.954	0.6546	9.20386	No
SLV 13	-36429	-71290	30	0.043	4403.1	0.954	0.6546	9.20386	No
SLV 3	-20224	-27032	-36	0.045	2760.6	0.931	0.70332	9.20386	No
SLV 4	-20224	-27032	-36	0.045	2760.6	0.931	0.70332	9.20386	No
SLV 11	-40961	-68377	-46	0.042	4863.7	0.958	0.64144	8.10374	No
SLV 12	-40961	-68377	-46	0.042	4863.7	0.958	0.64144	8.10374	No
SLV 8	-34415	-53023	-57	0.042	4198.5	0.952	0.64839	8.10374	No
SLV 7	-34415	-53023	-57	0.042	4198.5	0.952	0.64839	8.10374	No

Tabella dei coefficienti di sicurezza minimi

Stato limite	Coeff.s.	Comb.	Verifica
PF_SLU	3.354	SLU 84	Si
V_SLU	5.968	SLU 47	Si
PF_SLV	1.852	SLV 5	Si
V_SLV	1.196	SLV 5	Si
PFFP_SLV	4.245	SLV 1	Si
R_SLV	0.071	SLV 15	No

Maschio 160

Verifiche condotte secondo D.M. 17-01-18 (N.T.C.)

Dati geometrici

X ini.	Y ini.	X fin.	Y fin.	Quota i.	Quota.s	l	Sp.	h netta	h ini.	h fin.	a	a.s.,sx	a.s.,dx
-24.613	-3.183	-24.613	5.937	L5	L6	9.12	0.28	3.5	3.5	3.5			

Caratteristiche del materiale

(Circolare 7 21-01-19 C8.5.I) Muratura in mattoni pieni e malta di calce LC2_Corti

fb	fk	fvk0	fmedio	τ0	fv0	μ	ϕ	fv,lim	E	G	FC
600000			345000	9000	20000	0.58	0.77	32500	320000000	128000000	1.2

Verifica a pressoflessione nel piano secondo D.M. 17-01-18 NTC §7.8.2.2.1 in combinazioni non sismiche, γM = 3

Comb.	Quota	N	M	σ0	Mu	c.s.	Verifica
SLU 31	8.55	-68346	-3735.99	26764	209256.53	56.011	Si
SLU 31	12.05	-37394	-930.43	14644	139863.32	150.322	Si
SLU 82	8.55	-85529	-4564.49	33493	229649.27	50.312	Si
SLU 82	12.05	-46722	-1252.39	18297	165198.48	131.907	Si
SLU 81	8.55	-85791	-4453.35	33596	229860.42	51.615	Si
SLU 81	12.05	-46804	-1312.87	18329	165404.32	125.987	Si
SLU 61	8.55	-78577	-4122.66	30771	222958.35	54.081	Si
SLU 61	12.05	-42987	-1122.99	16834	155512.91	138.481	Si
SLU 73	8.55	-82547	-4233.97	32326	227038.98	53.623	Si
SLU 73	12.05	-45284	-1027.2	17733	161541.41	157.263	Si
SLU 39	8.55	-71590	-3955.37	28035	214097.87	54.128	Si
SLU 39	12.05	-38914	-1216.09	15239	144252.06	118.619	Si
SLU 19	8.55	-64376	-3624.68	25210	202703.99	55.923	Si
SLU 19	12.05	-35097	-1026.21	13744	133040.36	129.642	Si
SLU 40	8.55	-71327	-4066.51	27932	213723.28	52.557	Si
SLU 40	12.05	-38832	-1155.61	15207	144017.85	124.625	Si
SLU 18	8.55	-64638	-3513.55	25313	203158.59	57.821	Si
SLU 18	12.05	-35179	-1086.69	13776	133287.99	122.655	Si
SLU 60	8.55	-78840	-4011.53	30874	223249.5	55.652	Si
SLU 60	12.05	-43069	-1183.47	16866	155732.18	131.589	Si

Verifica a pressoflessione nel piano secondo D.M. 17-01-18 NTC §7.8.2.2.1 in combinazioni sismiche, γM = 2

Comb.	Quota	N	M	σ0	Mu	c.s.	Verifica
SLV 9	8.55	-52192	-43841.34	20439	198184.67	4.52	Si
SLV 9	12.05	-30975	-11898.83	12130	127224.87	10.692	Si
SLV 6	8.55	-61877	-39263.25	24231	226203.69	5.761	Si
SLV 6	12.05	-33133	-10459.96	12975	135044.24	12.911	Si
SLV 12	8.55	-56403	34141.56	22088	210704.83	6.172	Si
SLV 12	12.05	-31982	9198.58	12524	130887.78	14.229	Si
SLV 5	8.55	-61877	-39263.25	24231	226203.69	5.761	Si
SLV 5	12.05	-33133	-10459.96	12975	135044.24	12.911	Si
SLV 11	8.55	-56403	34141.56	22088	210704.83	6.172	Si
SLV 11	12.05	-31982	9198.58	12524	130887.78	14.229	Si
SLV 13	8.55	-42366	-21888.44	16591	166958.27	7.628	Si
SLV 13	12.05	-28810	-6193.41	11282	119241.5	19.253	Si
SLV 14	8.55	-42366	-21888.44	16591	166958.27	7.628	Si
SLV 14	12.05	-28810	-6193.41	11282	119241.5	19.253	Si
SLV 10	8.55	-52192	-43841.34	20439	198184.67	4.52	Si
SLV 10	12.05	-30975	-11898.83	12130	127224.87	10.692	Si

Comb.	Quota	N	M	σ0	Mu	c.s.	Verifica
SLV 8	8.55	-66088	38719.65	25881	237531.63	6.135	Si
SLV 8	12.05	-34140	10637.45	13369	138643.68	13.034	Si
SLV 7	8.55	-66088	38719.65	25881	237531.63	6.135	Si
SLV 7	12.05	-34140	10637.45	13369	138643.68	13.034	Si

Verifica a taglio nel piano secondo D.M. 17-01-18 (N.T.C.) §7.8.2.2.2 con rottura per scorrimento in combinazioni non sismiche, γM = 3

Comb.	Quota	N	V par	M	σ0	σN	l'	fvd	Vt scorr.	Vt fess.diag.	Vt,lim	c.s.	Verifica
SLU 44	8.55	-69047	-880	-2848.08		27039	9.12	9161	23393			26.59	Si
SLU 44	12.05	-38321	-457	-466.45		15007	9.12	7556	19296			42.26	Si
SLU 10	8.55	-61394	-885	-3294.17		24042	9.12	8761	22373			25.29	Si
SLU 10	12.05	-33659	-462	-801.03		13181	9.12	7313	18675			40.46	Si
SLU 26	8.55	-63725	-882	-1529.9		24955	9.12	8883	22683			25.72	Si
SLU 26	12.05	-35689	-459	248.31		13976	9.12	7419	18945			41.3	Si
SLU 2	8.55	-54845	-873	-2350.1		21478	9.12	8419	21499			24.63	Si
SLU 2	12.05	-30431	-451	-369.67		11917	9.12	7145	18244			40.45	Si
SLU 13	8.55	-63322	-883	-2032.15		24797	9.12	8862	22630			25.61	Si
SLU 13	12.05	-35182	-460	-53.64		13777	9.12	7393	18878			41.02	Si
SLU 23	8.55	-61797	-883	-2791.92		24200	9.12	8782	22426			25.4	Si
SLU 23	12.05	-34166	-460	-499.07		13380	9.12	7340	18742			40.74	Si
SLU 34	8.55	-70274	-894	-2473.97		27520	9.12	9225	23557			26.36	Si
SLU 34	12.05	-38917	-469	-183.04		15240	9.12	7588	19376			41.3	Si
SLU 47	8.55	-70975	-879	-1586.06		27794	9.12	9261	23650			26.91	Si
SLU 47	12.05	-39844	-455	280.94		15603	9.12	7636	19499			42.83	Si
SLU 5	8.55	-56774	-872	-1088.08		22233	9.12	8520	21756			24.96	Si
SLU 5	12.05	-31954	-450	377.71		12513	9.12	7224	18447			41.02	Si
SLU 31	8.55	-68346	-895	-3735.99		26764	9.12	9124	23299			26.04	Si
SLU 31	12.05	-37394	-471	-930.43		14644	9.12	7508	19173			40.75	Si

Verifica a taglio nel piano secondo D.M. 17-01-18 (N.T.C.) §7.8.2.2.2 con rottura per scorrimento in combinazioni sismiche, γM = 2

Comb.	Quota	N	V par	M	σ0	σN	l'	fvd	Vt scorr.	Vt fess.diag.	Vt,lim	c.s.	Verifica
SLV 7	8.55	-66088	18341	38719.65		25881	9.12	13509	34498			1.88	Si
SLV 7	12.05	-34140	14319	10637.45		13369	9.12	11007	28108			1.96	Si
SLV 12	8.55	-56403	17599	34141.56		22088	9.12	12751	32561			1.85	Si
SLV 12	12.05	-31982	13935	9198.58		12524	9.12	10838	27676			1.99	Si
SLV 8	8.55	-66088	18341	38719.65		25881	9.12	13509	34498			1.88	Si
SLV 8	12.05	-34140	14319	10637.45		13369	9.12	11007	28108			1.96	Si
SLV 6	8.55	-61877	-17683	-39263.25		24231	9.12	13180	33655			1.9	Si
SLV 6	12.05	-33133	-14004	-10459.96		12975	9.12	10928	27907			1.99	Si
SLV 5	8.55	-61877	-17683	-39263.25		24231	9.12	13180	33655			1.9	Si
SLV 5	12.05	-33133	-14004	-10459.96		12975	9.12	10928	27907			1.99	Si
SLV 10	8.55	-52192	-18424	-43841.34		20439	9.12	12421	31718			1.72	Si
SLV 10	12.05	-30975	-14387	-11898.83		12130	9.12	10759	27475			1.91	Si
SLV 11	8.55	-56403	17599	34141.56		22088	9.12	12751	32561			1.85	Si
SLV 11	12.05	-31982	13935	9198.58		12524	9.12	10838	27676			1.99	Si
SLV 14	8.55	-42366	-6680	-21888.44		16591	9.12	11651	29753			4.45	Si
SLV 14	12.05	-28810	-4921	-6193.41		11282	9.12	10590	27042			5.49	Si
SLV 13	8.55	-42366	-6680	-21888.44		16591	9.12	11651	29753			4.45	Si
SLV 13	12.05	-28810	-4921	-6193.41		11282	9.12	10590	27042			5.49	Si
SLV 9	8.55	-52192	-18424	-43841.34		20439	9.12	12421	31718			1.72	Si
SLV 9	12.05	-30975	-14387	-11898.83		12130	9.12	10759	27475			1.91	Si

Verifica a pressoflessione fuori piano D.M. 17-01-18 (N.T.C.)

quota 10.3 Wa 0.05 denominatore 8 γM = 2

Comb.	fd	Sa	σ0	N	M	Mc	Coeff.s.	Verifica
SLV 14	143750	0.46	14031	-35829	1102.02	4440.07	4.03	Si
SLV 13	143750	0.46	14031	-35829	1102.02	4440.07	4.03	Si
SLV 16	143750	0.46	14428	-36844	1102.02	4549.02	4.13	Si
SLV 15	143750	0.46	14428	-36844	1102.02	4549.02	4.13	Si
SLV 9	143750	0.46	16150	-41240	1102.02	5010.47	4.55	Si
SLV 10	143750	0.46	16150	-41240	1102.02	5010.47	4.55	Si
SLV 11	143750	0.46	17474	-44622	1102.02	5353.64	4.86	Si
SLV 12	143750	0.46	17474	-44622	1102.02	5353.64	4.86	Si
SLV 5	143750	0.46	18363	-46892	1102.02	5578.28	5.06	Si
SLV 6	143750	0.46	18363	-46892	1102.02	5578.28	5.06	Si

Verifica dei meccanismi locali di collasso con analisi cinematica lineare

forza di aggancio al piano = 0 quota mezzeria = 10.3 Wa = 0.05 Ta = 0.0731

Comb.	N top	N base	V orto	α0	M*	e*	a0*	aLim	Verifica
SLV 1	-36004	-74651	394	0.038	4941.2	0.931	0.59918	10.21601	No
SLV 2	-36004	-74651	394	0.038	4941.2	0.931	0.59918	10.21601	No
SLV 3	-36305	-75914	385	0.039	4971.7	0.931	0.6024	10.21601	No
SLV 4	-36305	-75914	385	0.039	4971.7	0.931	0.6024	10.21601	No
SLV 15	-29111	-43630	-388	0.038	4247.2	0.922	0.60259	10.21601	No
SLV 16	-29111	-43630	-388	0.038	4247.2	0.922	0.60259	10.21601	No
SLV 13	-28810	-42366	-379	0.038	4216.9	0.921	0.60662	10.21601	No
SLV 14	-28810	-42366	-379	0.038	4216.9	0.921	0.60662	10.21601	No
SLV 6	-33133	-61877	134	0.045	4651.8	0.927	0.69838	9.02602	No
SLV 5	-33133	-61877	134	0.045	4651.8	0.927	0.69838	9.02602	No

Tabella dei coefficienti di sicurezza minimi

Stato limite	Coeff.s.	Comb.	Verifica
PF_SLU	50.312	SLU 82	Si
V_SLU	24.633	SLU 2	Si
PF_SLV	4.52	SLV 9	Si
V_SLV	1.722	SLV 9	Si
PFFP_SLV	4.029	SLV 13	Si
R_SLV	0.059	SLV 1	No

Maschio 161

Verifiche condotte secondo D.M. 17-01-18 (N.T.C.)

Dati geometrici

X ini.	Y ini.	X fin.	Y fin.	Quota i.	Quota.s	l	Sp.	h netta	h ini.	h fin.	a	a.s.,sx	a.s.,dx
-22.878	5.937	-24.613	5.937	L5	L6	1.735	0.28	3.5	3.5	3.5			

Caratteristiche del materiale

(Circolare 7 21-01-19 C8.5.I) Muratura in mattoni pieni e malta di calce LC2_Corti

fb	fk	fvk0	fmedio	τ0	fv0	μ	ϕ	fv,lim	E	G	FC
600000			345000	9000	20000	0.58	0.77	32500	320000000	128000000	1.2

Verifica a pressoflessione nel piano secondo D.M. 17-01-18 NTC §7.8.2.2.1 in combinazioni non sismiche, γM = 3

Comb.	Quota	N	M	σ0	Mu	c.s.	Verifica
SLU 79	9.45	-12795	143.01	26338	7510.82	52.519	Si
SLU 79	11.35	-11226	-978.44	23108	6975.97	7.13	Si
SLU 78	9.45	-12934	153.82	26624	7553.07	49.102	Si
SLU 78	11.35	-11427	-1002.4	23523	7050.67	7.034	Si
SLU 41	9.45	-10460	201.32	21532	6675.81	33.161	Si
SLU 41	11.35	-9535	-885.11	19627	6278.64	7.094	Si
SLU 36	9.45	-10772	165.36	22173	6800.95	41.127	Si
SLU 36	11.35	-9770	-898.33	20110	6382.82	7.105	Si
SLU 83	9.45	-12623	189.77	25983	7457.43	39.296	Si
SLU 83	11.35	-11193	-989.18	23040	6963.53	7.04	Si
SLU 84	9.45	-12592	206.62	25920	7447.75	36.046	Si
SLU 84	11.35	-11201	-997.17	23057	6966.59	6.986	Si
SLU 38	9.45	-10602	171.4	21823	6733.14	39.284	Si
SLU 38	11.35	-9576	-882.36	19712	6297.1	7.137	Si
SLU 77	9.45	-12965	136.98	26687	7562.29	55.207	Si
SLU 77	11.35	-11419	-994.41	23506	7047.7	7.087	Si
SLU 80	9.45	-12764	159.85	26274	7501.37	46.926	Si
SLU 80	11.35	-11234	-986.42	23125	6979.01	7.075	Si
SLU 42	9.45	-10430	218.16	21469	6663.2	30.543	Si
SLU 42	11.35	-9543	-893.1	19644	6282.28	7.034	Si

Verifica a pressoflessione nel piano secondo D.M. 17-01-18 NTC §7.8.2.2.1 in combinazioni sismiche, γM = 2

Comb.	Quota	N	M	σ0	Mu	c.s.	Verifica
SLV 3	9.45	-11032	2212.21	22708	7791.47	3.522	Si
SLV 3	11.35	-12361	-3131.91	25445	8490.31	2.711	Si
SLV 15	9.45	-9003	-2364.86	18531	6625.31	2.802	Si
SLV 15	11.35	-4183	1574.42	8610	3372.99	2.142	Si
SLV 6	9.45	-4276	1250.92	8801	3442.02	2.752	Si
SLV 6	11.35	-5164	-628.3	10629	4089.85	6.509	Si
SLV 2	9.45	-8241	2507.91	16964	6156.78	2.455	Si
SLV 2	11.35	-10360	-2736.65	21326	7418.99	2.711	Si
SLV 16	9.45	-9003	-2364.86	18531	6625.31	2.802	Si
SLV 16	11.35	-4183	1574.42	8610	3372.99	2.142	Si
SLV 13	9.45	-6212	-2069.16	12787	4825.11	2.332	Si
SLV 13	11.35	-2182	1969.68	0	0	0	No, e>l/2
SLV 4	9.45	-11032	2212.21	22708	7791.47	3.522	Si
SLV 4	11.35	-12361	-3131.91	25445	8490.31	2.711	Si
SLV 5	9.45	-4276	1250.92	8801	3442.02	2.752	Si
SLV 5	11.35	-5164	-628.3	10629	4089.85	6.509	Si
SLV 14	9.45	-6212	-2069.16	12787	4825.11	2.332	Si
SLV 14	11.35	-2182	1969.68	0	0	0	No, e>l/2
SLV 1	9.45	-8241	2507.91	16964	6156.78	2.455	Si
SLV 1	11.35	-10360	-2736.65	21326	7418.99	2.711	Si

Verifica a taglio nel piano secondo D.M. 17-01-18 (N.T.C.) §7.8.2.2.2 con rottura per scorrimento in combinazioni non sismiche, γM = 3

Comb.	Quota	N	V par	M	σ0	σN	l'	fvd	Vt scorr.	Vt fess.diag.	Vt,lim	c.s.	Verifica
SLU 83	9.45	-12623	993	189.77		25983	1.735	9020	4382			4.41	Si
SLU 83	11.35	-11193	995	-989.18		23040	1.735	8628	4191			4.21	Si
SLU 73	9.45	-11824	932	191.67		24339	1.735	8801	4275			4.59	Si
SLU 73	11.35	-10359	926	-894.66		21323	1.735	8399	4080			4.41	Si
SLU 40	9.45	-9970	966	228.45		20522	1.735	8292	4028			4.17	Si
SLU 40	11.35	-9103	962	-844.55		18738	1.735	8054	3913			4.07	Si
SLU 31	9.45	-9662	883	203.22		19888	1.735	8207	3987			4.52	Si
SLU 31	11.35	-8701	876	-790.59		17910	1.735	7944	3859			4.4	Si
SLU 84	9.45	-12592	1026	206.62		25920	1.735	9012	4378			4.27	Si
SLU 84	11.35	-11201	1023	-997.17		23057	1.735	8630	4192			4.1	Si
SLU 41	9.45	-10460	944	201.32		21532	1.735	8427	4094			4.34	Si
SLU 41	11.35	-9535	945	-885.11		19627	1.735	8173	3970			4.2	Si
SLU 81	9.45	-12163	982	200.07		25037	1.735	8894	4321			4.4	Si
SLU 81	11.35	-10753	983	-940.63		22134	1.735	8507	4133			4.2	Si
SLU 82	9.45	-12132	1015	216.91		24973	1.735	8885	4317			4.25	Si
SLU 82	11.35	-10761	1012	-948.62		22150	1.735	8509	4134			4.09	Si
SLU 39	9.45	-10001	933	211.61		20586	1.735	8300	4032			4.32	Si
SLU 39	11.35	-9095	934	-836.57		18721	1.735	8052	3912			4.19	Si
SLU 42	9.45	-10430	977	218.16		21469	1.735	8418	4090			4.18	Si
SLU 42	11.35	-9543	974	-893.1		19644	1.735	8175	3971			4.08	Si

Verifica a taglio nel piano secondo D.M. 17-01-18 (N.T.C.) §7.8.2.2.2 con rottura per scorrimento in combinazioni sismiche, γM = 2

Comb.	Quota	N	V par	M	σ0	σN	l'	fvd	Vt scorr.	Vt fess.diag.	Vt,lim	c.s.	Verifica
SLV 15	9.45	-9003	-3350	-2364.86		18531	1.735	12040	5849			1.75	Si
SLV 15	11.35	-4183	-2579	1574.42		10140	1.4733	10361	4274			1.66	Si
SLV 3	9.45	-11032	4998	2212.21		22708	1.735	12875	6255			1.25	Si
SLV 3	11.35	-12361	4020	-3131.91		25445	1.735	13422	6521			1.62	Si
SLV 1	9.45	-8241	4377	2507.91		17420	1.6896	11817	5591			1.28	Si

Comb.	Quota	N	V par	M	σ0	σN	l'	fvd	Vt scorr.	Vt fess.diag.	Vt,lim	c.s.	Verifica
SLV 1	11.35	-10360	3607	-2736.65		21326	1.735	12599	6120			1.7	Si
SLV 16	9.45	-9003	-3350	-2364.86		18531	1.735	12040	5849			1.75	Si
SLV 16	11.35	-4183	-2579	1574.42		10140	1.4733	10361	4274			1.66	Si
SLV 2	9.45	-8241	4377	2507.91		17420	1.6896	11817	5591			1.28	Si
SLV 2	11.35	-10360	3607	-2736.65		21326	1.735	12599	6120			1.7	Si
SLV 7	9.45	-13577	2801	265.26		27947	1.735	13923	6764			2.41	Si
SLV 7	11.35	-11833	2192	-1945.83		24358	1.735	13205	6415			2.93	Si
SLV 14	9.45	-6212	-3971	-2069.16		13838	1.6033	11101	4983			1.25	Si
SLV 14	11.35	-2182	-2991	1969.68		0	0	8333	0			0	No, Vu<V
SLV 8	9.45	-13577	2801	265.26		27947	1.735	13923	6764			2.41	Si
SLV 8	11.35	-11833	2192	-1945.83		24358	1.735	13205	6415			2.93	Si
SLV 13	9.45	-6212	-3971	-2069.16		13838	1.6033	11101	4983			1.25	Si
SLV 13	11.35	-2182	-2991	1969.68		0	0	8333	0			0	No, Vu<V
SLV 4	9.45	-11032	4998	2212.21		22708	1.735	12875	6255			1.25	Si
SLV 4	11.35	-12361	4020	-3131.91		25445	1.735	13422	6521			1.62	Si

Verifica a pressoflessione fuori piano D.M. 17-01-18 (N.T.C.)

quota 10.3 Wa 0.05 denominatore 8 γM = 2

Comb.	fd	Sa	σ0	N	M	Mc	Coeff.s.	Verifica
SLV 9	143750	0.46	7210	-3503	209.65	461.44	2.2	Si
SLV 10	143750	0.46	7210	-3503	209.65	461.44	2.2	Si
SLV 13	143750	0.46	9457	-4594	209.65	593.43	2.83	Si
SLV 14	143750	0.46	9457	-4594	209.65	593.43	2.83	Si
SLV 5	143750	0.46	10139	-4925	209.65	632.33	3.02	Si
SLV 6	143750	0.46	10139	-4925	209.65	632.33	3.02	Si
SLV 16	143750	0.46	14312	-6953	209.65	859.38	4.1	Si
SLV 15	143750	0.46	14312	-6953	209.65	859.38	4.1	Si
SLV 1	143750	0.46	19219	-9337	209.65	1101.52	5.25	Si
SLV 2	143750	0.46	19219	-9337	209.65	1101.52	5.25	Si

Verifica dei meccanismi locali di collasso con analisi cinematica lineare

forza di aggancio al piano = 0 quota mezzeria = 10.3 Wa = 0.05 Ta = 0.0731

Comb.	N top	N base	V orto	α0	M*	e*	a0*	aLim	Verifica
SLV 10	-3068	-3235	359	0	562.3	0.9	0	9.02602	No
SLV 5	-4261	-5283	363	0	680.2	0.911	0	9.02602	No
SLV 6	-4261	-5283	363	0	680.2	0.911	0	9.02602	No
SLV 9	-3068	-3235	359	0	562.3	0.9	0	9.02602	No
SLV 11	-7021	-11764	-363	0.005	957.4	0.932	0.073	9.02602	No
SLV 12	-7021	-11764	-363	0.005	957.4	0.932	0.073	9.02602	No
SLV 8	-8213	-13813	-359	0.009	1077.9	0.938	0.14593	9.02602	No
SLV 7	-8213	-13813	-359	0.009	1077.9	0.938	0.14593	9.02602	No
SLV 16	-4247	-6389	-115	0.031	678.8	0.911	0.4889	10.21601	No
SLV 15	-4247	-6389	-115	0.031	678.8	0.911	0.4889	10.21601	No

Tabella dei coefficienti di sicurezza minimi

Stato limite	Coeff.s.	Comb.	Verifica
PF_SLU	6.986	SLU 84	Si
V_SLU	4.065	SLU 40	Si
PF_SLV	0	SLV 13	No
V_SLV	0	SLV 13	No
PFFP_SLV	2.201	SLV 9	Si
R_SLV	0	SLV 5	No

Maschio 162

Verifiche condotte secondo D.M. 17-01-18 (N.T.C.)

Dati geometrici

X ini.	Y ini.	X fin.	Y fin.	Quota i.	Quota.s	l	Sp.	h netta	h ini.	h fin.	a	a.s.,sx	a.s.,dx
-19.663	5.937	-21.878	5.937	L5	L6	2.215	0.28	3.5	3.5	3.5			

Caratteristiche del materiale

(Circolare 7 21-01-19 C8.5.I) Muratura in mattoni pieni e malta di calce LC2_Corti

fb	fk	fvk0	fmedio	τ0	fv0	μ	ϕ	fv,lim	E	G	FC
600000			345000	9000	20000	0.58	0.77	32500	320000000	128000000	1.2

Verifica a pressoflessione nel piano secondo D.M. 17-01-18 NTC §7.8.2.2.1 in combinazioni non sismiche, γM = 3

Comb.	Quota	N	M	σ0	Mu	c.s.	Verifica
SLU 73	9.45	-14639	661.52	23606	11512.84	17.404	Si
SLU 73	11.35	-11926	695.7	19232	10088.6	14.501	Si
SLU 81	9.45	-15116	635.4	24376	11729.96	18.461	Si
SLU 81	11.35	-12464	744.55	20099	10396.5	13.964	Si
SLU 60	9.45	-13882	609.22	22385	11147.79	18.298	Si
SLU 60	11.35	-11206	673.27	18070	9656.07	14.342	Si
SLU 39	9.45	-12569	502.16	20269	10455.46	20.821	Si
SLU 39	11.35	-10578	633.56	17058	9260.89	14.617	Si
SLU 82	9.45	-15088	651.41	24331	11717.56	17.988	Si
SLU 82	11.35	-12429	735.19	20042	10376.74	14.114	Si
SLU 61	9.45	-13854	625.23	22340	11133.88	17.808	Si
SLU 61	11.35	-11170	663.92	18013	9634.37	14.511	Si
SLU 83	9.45	-15741	678.97	25383	11999.15	17.672	Si
SLU 83	11.35	-13073	746.83	21081	10730.1	14.367	Si
SLU 74	9.45	-15582	687.66	25128	11932.56	17.352	Si
SLU 74	11.35	-12870	726.55	20754	10620.69	14.618	Si
SLU 84	9.45	-15713	694.99	25338	11987.52	17.249	Si
SLU 84	11.35	-13038	737.48	21024	10711.28	14.524	Si

Comb.	Quota	N	M	σ0	Mu	c.s.	Verifica
SLU 75	9.45	-15555	703.67	25083	11920.73	16.941	Si
SLU 75	11.35	-12835	717.2	20697	10601.56	14.782	Si

Verifica a pressoflessione nel piano secondo D.M. 17-01-18 NTC §7.8.2.2.1 in combinazioni sismiche, γM = 2

Comb.	Quota	N	M	σ0	Mu	c.s.	Verifica
SLV 2	9.45	-13052	3679.45	21047	11963.74	3.252	Si
SLV 2	11.35	-6322	-2655.16	10195	6416.92	2.417	Si
SLV 4	9.45	-16639	3823.03	26831	14379.11	3.761	Si
SLV 4	11.35	-9136	-2670.75	14732	8896.82	3.331	Si
SLV 16	9.45	-8026	-2715.59	12943	7946.62	2.926	Si
SLV 16	11.35	-10482	3643.07	16903	10001.61	2.745	Si
SLV 1	9.45	-13052	3679.45	21047	11963.74	3.252	Si
SLV 1	11.35	-6322	-2655.16	10195	6416.92	2.417	Si
SLV 14	9.45	-4440	-2859.17	7160	4628.41	1.619	Si
SLV 14	11.35	-7668	3658.66	12366	7632.42	2.086	Si
SLV 9	9.45	-3270	-738.17	5273	3464.6	4.693	Si
SLV 9	11.35	-3915	1467.02	6313	4111.35	2.803	Si
SLV 15	9.45	-8026	-2715.59	12943	7946.62	2.926	Si
SLV 15	11.35	-10482	3643.07	16903	10001.61	2.745	Si
SLV 13	9.45	-4440	-2859.17	7160	4628.41	1.619	Si
SLV 13	11.35	-7668	3658.66	12366	7632.42	2.086	Si
SLV 10	9.45	-3270	-738.17	5273	3464.6	4.693	Si
SLV 10	11.35	-3915	1467.02	6313	4111.35	2.803	Si
SLV 3	9.45	-16639	3823.03	26831	14379.11	3.761	Si
SLV 3	11.35	-9136	-2670.75	14732	8896.82	3.331	Si

Verifica a taglio nel piano secondo D.M. 17-01-18 (N.T.C.) §7.8.2.2.2 con rottura per scorrimento in combinazioni non sismiche, γM = 3

Comb.	Quota	N	V par	M	σ0	σN	l'	fvd	Vt scorr.	Vt fess.diag.	Vt,lim	c.s.	Verifica
SLU 41	9.45	-13194	-192	545.73		21276	2.2147	8392	5204			27.12	Si
SLU 41	11.35	-11187	-221	635.85		18041	2.2147	7961	4937			22.35	Si
SLU 84	9.45	-15713	-153	694.99		25338	2.2147	8934	5540			36.23	Si
SLU 84	11.35	-13038	-182	737.48		21024	2.2147	8359	5184			28.42	Si
SLU 82	9.45	-15088	-185	651.41		24331	2.2147	8800	5457			29.54	Si
SLU 82	11.35	-12429	-212	735.19		20042	2.2147	8228	5102			24.1	Si
SLU 18	9.45	-11335	-161	475.98		18279	2.2147	7993	4956			30.79	Si
SLU 18	11.35	-9320	-183	562.28		15029	2.2147	7559	4688			25.61	Si
SLU 32	9.45	-13036	-148	554.41		21021	2.2147	8358	5183			34.94	Si
SLU 32	11.35	-10984	-175	615.57		17713	2.2147	7917	4910			28.09	Si
SLU 39	9.45	-12569	-224	502.16		20269	2.2147	8258	5121			22.9	Si
SLU 39	11.35	-10578	-250	633.56		17058	2.2147	7830	4856			19.41	Si
SLU 40	9.45	-12541	-207	518.17		20224	2.2147	8252	5117			24.69	Si
SLU 40	11.35	-10543	-231	624.21		17001	2.2147	7822	4851			21.01	Si
SLU 42	9.45	-13166	-175	561.75		21231	2.2147	8386	5201			29.64	Si
SLU 42	11.35	-11152	-202	626.49		17984	2.2147	7953	4932			24.46	Si
SLU 83	9.45	-15741	-169	678.97		25383	2.2147	8940	5544			32.73	Si
SLU 83	11.35	-13073	-202	746.83		21081	2.2147	8366	5188			25.73	Si
SLU 81	9.45	-15116	-201	635.4		24376	2.2147	8806	5461			27.15	Si
SLU 81	11.35	-12464	-231	744.55		20099	2.2147	8235	5107			22.11	Si

Verifica a taglio nel piano secondo D.M. 17-01-18 (N.T.C.) §7.8.2.2.2 con rottura per scorrimento in combinazioni sismiche, γM = 2

Comb.	Quota	N	V par	M	σ0	σN	l'	fvd	Vt scorr.	Vt fess.diag.	Vt,lim	c.s.	Verifica
SLV 1	9.45	-13052	5720	3679.45		21047	2.2147	12543	7778			1.36	Si
SLV 1	11.35	-6322	4821	-2655.16		10949	2.0622	10523	6076			1.26	Si
SLV 4	9.45	-16639	7792	3823.03		26831	2.2147	13700	8495			1.09	Si
SLV 4	11.35	-9136	6686	-2670.75		14732	2.2147	11280	6995			1.05	Si
SLV 15	9.45	-8026	-5815	-2715.59		12943	2.2147	10922	6773			1.16	Si
SLV 15	11.35	-10482	-4953	3643.07		16903	2.2147	11714	7264			1.47	Si
SLV 13	9.45	-4440	-7887	-2859.17		11406	1.3901	10615	4132			0.52	No, Vu<V
SLV 13	11.35	-7668	-6818	3658.66		14485	1.8908	11230	5946			0.87	No, Vu<V
SLV 3	9.45	-16639	7792	3823.03		26831	2.2147	13700	8495			1.09	Si
SLV 3	11.35	-9136	6686	-2670.75		14732	2.2147	11280	6995			1.05	Si
SLV 10	9.45	-3270	-5541	-738.17		5273	2.2147	9388	5822			1.05	Si
SLV 10	11.35	-3915	-4920	1467.02		6361	2.198	9606	5912			1.2	Si
SLV 2	9.45	-13052	5720	3679.45		21047	2.2147	12543	7778			1.36	Si
SLV 2	11.35	-6322	4821	-2655.16		10949	2.0622	10523	6076			1.26	Si
SLV 16	9.45	-8026	-5815	-2715.59		12943	2.2147	10922	6773			1.16	Si
SLV 16	11.35	-10482	-4953	3643.07		16903	2.2147	11714	7264			1.47	Si
SLV 14	9.45	-4440	-7887	-2859.17		11406	1.3901	10615	4132			0.52	No, Vu<V
SLV 14	11.35	-7668	-6818	3658.66		14485	1.8908	11230	5946			0.87	No, Vu<V
SLV 9	9.45	-3270	-5541	-738.17		5273	2.2147	9388	5822			1.05	Si
SLV 9	11.35	-3915	-4920	1467.02		6361	2.198	9606	5912			1.2	Si

Verifica a pressoflessione fuori piano D.M. 17-01-18 (N.T.C.)

quota 10.3 Wa 0.05 denominatore 8 γM = 2

Comb.	fd	Sa	σ0	N	M	Mc	Coeff.s.	Verifica
SLV 10	143750	0.46	6270	-3888	267.62	516.41	1.93	Si
SLV 9	143750	0.46	6270	-3888	267.62	516.41	1.93	Si
SLV 6	143750	0.46	8170	-5066	267.62	661.84	2.47	Si
SLV 5	143750	0.46	8170	-5066	267.62	661.84	2.47	Si
SLV 13	143750	0.46	9945	-6167	267.62	793.13	2.96	Si
SLV 14	143750	0.46	9945	-6167	267.62	793.13	2.96	Si
SLV 15	143750	0.46	14995	-9299	267.62	1142.06	4.27	Si
SLV 16	143750	0.46	14995	-9299	267.62	1142.06	4.27	Si
SLV 2	143750	0.46	16277	-10094	267.62	1224.89	4.58	Si
SLV 1	143750	0.46	16277	-10094	267.62	1224.89	4.58	Si

Verifica dei meccanismi locali di collasso con analisi cinematica lineare

forza di aggancio al piano = 0 quota mezzeria = 10.3 Wa = 0.05 Ta = 0.0731

Comb.	N top	N base	V orto	α0	M*	e*	a0*	aLim	Verifica

Comb.	N top	N base	V orto	α0	M*	e*	a0*	aLim	Verifica
SLV 10	-2919	-3944	159	0.023	621.2	0.893	0.38117	9.02602	No
SLV 9	-2919	-3944	159	0.023	621.2	0.893	0.38117	9.02602	No
SLV 6	-3453	-5558	160	0.025	672.6	0.897	0.40213	9.02602	No
SLV 5	-3453	-5558	160	0.025	672.6	0.897	0.40213	9.02602	No
SLV 12	-10352	-15429	-161	0.033	1362.5	0.937	0.51547	9.02602	No
SLV 11	-10352	-15429	-161	0.033	1362.5	0.937	0.51547	9.02602	No
SLV 7	-10886	-17043	-160	0.034	1416.5	0.939	0.52032	9.02602	No
SLV 8	-10886	-17043	-160	0.034	1416.5	0.939	0.52032	9.02602	No
SLV 3	-8907	-14906	-46	0.043	1216.5	0.931	0.66998	10.21601	No
SLV 4	-8907	-14906	-46	0.043	1216.5	0.931	0.66998	10.21601	No

Tabella dei coefficienti di sicurezza minimi

Stato limite	Coeff.s.	Comb.	Verifica
PF_SLU	13.964	SLU 81	Si
V_SLU	19.412	SLU 39	Si
PF_SLV	1.619	SLV 13	Si
V_SLV	0.524	SLV 13	No
PFFP_SLV	1.93	SLV 9	Si
R_SLV	0.042	SLV 9	No

Maschio 163

Verifiche condotte secondo D.M. 17-01-18 (N.T.C.)

Dati geometrici

X ini.	Y ini.	X fin.	Y fin.	Quota i.	Quota.s	l	Sp.	h netta	h ini.	h fin.	a	a.s.,sx	a.s.,dx
-22.517	-3.183	-24.613	-3.183	L5	L6	2.095	0.28	3.5	3.5	3.5			

Caratteristiche del materiale

(Circolare 7 21-01-19 C8.5.I) Muratura in mattoni pieni e malta di calce LC2_Corti

fb	fk	fvk0	fmedio	τ0	fv0	μ	ϕ	fv,lim	E	G	FC
600000			345000	9000	20000	0.58	0.77	32500	320000000	128000000	1.2

Verifica a pressoflessione nel piano secondo D.M. 17-01-18 NTC §7.8.2.2.1 in combinazioni non sismiche, γM = 3

Comb.	Quota	N	M	σ0	Mu	c.s.	Verifica
SLU 32	9.45	-11919	611.09	20316	9372.95	15.338	Si
SLU 32	11.35	-10344	-1006.03	17632	8491.49	8.441	Si
SLU 84	9.45	-14696	698.84	25049	10661.95	15.257	Si
SLU 84	11.35	-12467	-1153.1	21250	9653.95	8.372	Si
SLU 82	9.45	-14548	737.79	24798	10601.87	14.37	Si
SLU 82	11.35	-12436	-1191.06	21196	9638.21	8.092	Si
SLU 74	9.45	-14440	667.86	24613	10557.33	15.808	Si
SLU 74	11.35	-12254	-1137.01	20887	9546.2	8.396	Si
SLU 81	9.45	-14417	777.61	24574	10547.63	13.564	Si
SLU 81	11.35	-12415	-1206.81	21160	9627.6	7.978	Si
SLU 42	9.45	-12175	642.07	20752	9505.84	14.805	Si
SLU 42	11.35	-10557	-1022.12	17995	8617.09	8.431	Si
SLU 83	9.45	-14565	738.66	24825	10608.56	14.362	Si
SLU 83	11.35	-12446	-1168.85	21214	9643.37	8.25	Si
SLU 41	9.45	-12044	681.9	20528	9437.93	13.841	Si
SLU 41	11.35	-10536	-1037.87	17959	8604.74	8.291	Si
SLU 39	9.45	-11896	720.85	20277	9360.66	12.986	Si
SLU 39	11.35	-10505	-1075.82	17905	8586.34	7.981	Si
SLU 40	9.45	-12027	681.02	20501	9429.43	13.846	Si
SLU 40	11.35	-10526	-1060.08	17941	8598.72	8.111	Si

Verifica a pressoflessione nel piano secondo D.M. 17-01-18 NTC §7.8.2.2.1 in combinazioni sismiche, γM = 2

Comb.	Quota	N	M	σ0	Mu	c.s.	Verifica
SLV 15	9.45	-7949	-1775.7	13549	7404.51	4.17	Si
SLV 15	11.35	-4898	1701.05	8349	4780.79	2.81	Si
SLV 1	9.45	-12259	2629.47	20896	10647.12	4.049	Si
SLV 1	11.35	-11748	-3156.59	20024	10290.77	3.26	Si
SLV 3	9.45	-9762	2855.08	16639	8834.29	3.094	Si
SLV 3	11.35	-10893	-3489.39	18568	9678.3	2.774	Si
SLV 8	9.45	-6213	1497.53	10591	5945.35	3.97	Si
SLV 8	11.35	-7798	-2061.01	13292	7281.02	3.533	Si
SLV 4	9.45	-9762	2855.08	16639	8834.29	3.094	Si
SLV 4	11.35	-10893	-3489.39	18568	9678.3	2.774	Si
SLV 2	9.45	-12259	2629.47	20896	10647.12	4.049	Si
SLV 2	11.35	-11748	-3156.59	20024	10290.77	3.26	Si
SLV 16	9.45	-7949	-1775.7	13549	7404.51	4.17	Si
SLV 16	11.35	-4898	1701.05	8349	4780.79	2.81	Si
SLV 7	9.45	-6213	1497.53	10591	5945.35	3.97	Si
SLV 7	11.35	-7798	-2061.01	13292	7281.02	3.533	Si
SLV 13	9.45	-10447	-2001.32	17806	9349.66	4.672	Si
SLV 13	11.35	-5752	2033.85	9805	5543.01	2.725	Si
SLV 14	9.45	-10447	-2001.32	17806	9349.66	4.672	Si
SLV 14	11.35	-5752	2033.85	9805	5543.01	2.725	Si

Verifica a taglio nel piano secondo D.M. 17-01-18 (N.T.C.) §7.8.2.2.2 con rottura per scorrimento in combinazioni non sismiche, γM = 3

Comb.	Quota	N	V par	M	σ0	σN	l'	fvd	Vt scorr.	Vt fess.diag.	Vt,lim	c.s.	Verifica
SLU 39	9.45	-11896	1338	720.85		20277	2.0953	8259	4846			3.62	Si
SLU 39	11.35	-10505	1338	-1075.82		17905	2.0953	7943	4660			3.48	Si
SLU 32	9.45	-11919	1142	611.09		20316	2.0953	8264	4849			4.24	Si
SLU 32	11.35	-10344	1142	-1006.03		17632	2.0953	7906	4639			4.06	Si
SLU 81	9.45	-14417	1437	777.61		24574	2.0953	8832	5182			3.61	Si

Comb.	Quota	N	V par	M	σ0	σN	l'	fvd	Vt scorr.	Vt fess.diag.	Vt,lim	c.s.	Verifica
SLU 81	11.35	-12415	1436	-1206.81		21160	2.0953	8377	4915			3.42	Si
SLU 74	9.45	-14440	1241	667.86		24613	2.0953	8837	5185			4.18	Si
SLU 74	11.35	-12254	1240	-1137.01		20887	2.0953	8340	4893			3.95	Si
SLU 82	9.45	-14548	1363	737.79		24798	2.0953	8862	5199			3.82	Si
SLU 82	11.35	-12436	1326	-1191.06		21196	2.0953	8382	4917			3.71	Si
SLU 41	9.45	-12044	1234	681.9		20528	2.0953	8293	4865			3.94	Si
SLU 41	11.35	-10536	1233	-1037.87		17959	2.0953	7950	4664			3.78	Si
SLU 40	9.45	-12027	1264	681.02		20501	2.0953	8289	4863			3.85	Si
SLU 40	11.35	-10526	1228	-1060.08		17941	2.0953	7948	4663			3.8	Si
SLU 84	9.45	-14696	1258	698.84		25049	2.0953	8895	5219			4.15	Si
SLU 84	11.35	-12467	1221	-1153.1		21250	2.0953	8389	4922			4.03	Si
SLU 60	9.45	-13415	1194	646.27		22865	2.0953	8604	5048			4.23	Si
SLU 60	11.35	-11285	1193	-1043.49		19236	2.0953	8120	4764			3.99	Si
SLU 83	9.45	-14565	1332	738.66		24825	2.0953	8866	5201			3.91	Si
SLU 83	11.35	-12446	1331	-1168.85		21214	2.0953	8384	4919			3.7	Si

Verifica a taglio nel piano secondo D.M. 17-01-18 (N.T.C.) §7.8.2.2.2 con rottura per scorrimento in combinazioni sismiche, γM = 2

Comb.	Quota	N	V par	M	σ0	σN	l'	fvd	Vt scorr.	Vt fess.diag.	Vt,lim	c.s.	Verifica
SLV 3	9.45	-9762	5728	2855.08		16639	2.0953	11661	6841			1.19	Si
SLV 3	11.35	-10893	4776	-3489.39		18568	2.0953	12047	7068			1.48	Si
SLV 8	9.45	-6213	4001	1497.53		10591	2.0953	10451	6132			1.53	Si
SLV 8	11.35	-7798	3733	-2061.01		13292	2.0953	10992	6449			1.73	Si
SLV 14	9.45	-10447	-4182	-2001.32		17806	2.0953	11895	6978			1.67	Si
SLV 14	11.35	-5752	-3232	2033.85		9866	2.0823	10307	6009			1.86	Si
SLV 16	9.45	-7949	-3034	-1775.7		13549	2.0953	11043	6479			2.14	Si
SLV 16	11.35	-4898	-2072	1701.05		8349	2.0953	10003	5869			2.83	Si
SLV 4	9.45	-9762	5728	2855.08		16639	2.0953	11661	6841			1.19	Si
SLV 4	11.35	-10893	4776	-3489.39		18568	2.0953	12047	7068			1.48	Si
SLV 1	9.45	-12259	4579	2629.47		20896	2.0953	12512	7341			1.6	Si
SLV 1	11.35	-11748	3616	-3156.59		20024	2.0953	12338	7239			2	Si
SLV 7	9.45	-6213	4001	1497.53		10591	2.0953	10451	6132			1.53	Si
SLV 7	11.35	-7798	3733	-2061.01		13292	2.0953	10992	6449			1.73	Si
SLV 13	9.45	-10447	-4182	-2001.32		17806	2.0953	11895	6978			1.67	Si
SLV 13	11.35	-5752	-3232	2033.85		9866	2.0823	10307	6009			1.86	Si
SLV 15	9.45	-7949	-3034	-1775.7		13549	2.0953	11043	6479			2.14	Si
SLV 15	11.35	-4898	-2072	1701.05		8349	2.0953	10003	5869			2.83	Si
SLV 2	9.45	-12259	4579	2629.47		20896	2.0953	12512	7341			1.6	Si
SLV 2	11.35	-11748	3616	-3156.59		20024	2.0953	12338	7239			2	Si

Verifica a pressoflessione fuori piano D.M. 17-01-18 (N.T.C.)

quota 10.3 Wa 0.05 denominatore 8 γM = 2

Comb.	fd	Sa	σ0	N	M	Mc	Coeff.s.	Verifica
SLV 12	143750	0.46	9625	-5647	253.19	728.29	2.88	Si
SLV 11	143750	0.46	9625	-5647	253.19	728.29	2.88	Si
SLV 7	143750	0.46	11138	-6534	253.19	831.44	3.28	Si
SLV 8	143750	0.46	11138	-6534	253.19	831.44	3.28	Si
SLV 15	143750	0.46	11876	-6967	253.19	880.62	3.48	Si
SLV 16	143750	0.46	11876	-6967	253.19	880.62	3.48	Si
SLV 13	143750	0.46	15318	-8987	253.19	1100.41	4.35	Si
SLV 14	143750	0.46	15318	-8987	253.19	1100.41	4.35	Si
SLV 3	143750	0.46	16919	-9926	253.19	1197.21	4.73	Si
SLV 4	143750	0.46	16919	-9926	253.19	1197.21	4.73	Si

Verifica dei meccanismi locali di collasso con analisi cinematica lineare

forza di aggancio al piano = 0 quota mezzeria = 10.3 Wa = 0.05 Ta = 0.0731

Comb.	N top	N base	V orto	α0	M*	e*	a0*	aLim	Verifica
SLV 12	-4409	-5396	-212	0.018	748.3	0.906	0.28666	9.02602	No
SLV 11	-4409	-5396	-212	0.018	748.3	0.906	0.28666	9.02602	No
SLV 7	-5323	-6962	-189	0.024	839.1	0.913	0.38121	9.02602	No
SLV 8	-5323	-6962	-189	0.024	839.1	0.913	0.38121	9.02602	No
SLV 5	-8563	-15603	212	0.027	1164.7	0.932	0.41639	9.02602	No
SLV 6	-8563	-15603	212	0.027	1164.7	0.932	0.41639	9.02602	No
SLV 10	-7649	-14037	189	0.028	1072.5	0.927	0.43692	9.02602	No
SLV 9	-7649	-14037	189	0.028	1072.5	0.927	0.43692	9.02602	No
SLV 15	-4477	-6593	-99	0.036	755	0.906	0.57752	10.21601	No
SLV 16	-4477	-6593	-99	0.036	755	0.906	0.57752	10.21601	No

Tabella dei coefficienti di sicurezza minimi

Stato limite	Coeff.s.	Comb.	Verifica
PF_SLU	7.978	SLU 81	Si
V_SLU	3.423	SLU 81	Si
PF_SLV	2.725	SLV 13	Si
V_SLV	1.194	SLV 3	Si
PFFP_SLV	2.876	SLV 11	Si
R_SLV	0.032	SLV 11	No

Maschio 164

Verifiche condotte secondo D.M. 17-01-18 (N.T.C.)

Dati geometrici

X ini.	Y ini.	X fin.	Y fin.	Quota i.	Quota.s	l	Sp.	h netta	h ini.	h fin.	a	a.s.,sx	a.s.,dx
-19.287	-3.183	-21.517	-3.183	L5	L6	2.23	0.28	3.5	3.5	3.5			

Caratteristiche del materiale

(Circolare 7 21-01-19 C8.5.I) Muratura in mattoni pieni e malta di calce LC2_Corti

fb	fk	fvk0	fmedio	τ0	fv0	μ	ϕ	fv,lim	E	G	FC
600000			345000	9000	20000	0.58	0.77	32500	320000000	128000000	1.2

Verifica a pressoflessione nel piano secondo D.M. 17-01-18 NTC §7.8.2.2.1 in combinazioni non sismiche, γM = 3

Comb.	Quota	N	M	σ0	Mu	c.s.	Verifica
SLU 83	10.55	-12018	-571.34	19247	10233.7	17.912	Si
SLU 83	11.35	-10870	-48.28	17408	9529.59	197.386	Si
SLU 74	10.55	-11987	-568.86	19198	10215.77	17.958	Si
SLU 74	11.35	-10839	-58.43	17359	9510.12	162.755	Si
SLU 41	10.55	-10083	-486.87	16148	9013.62	18.513	Si
SLU 41	11.35	-9192	-43.62	14722	8397.02	192.518	Si
SLU 35	10.55	-10098	-482.43	16172	9023.96	18.705	Si
SLU 35	11.35	-9208	-1.76	14746	8407.97	1000	Si
SLU 79	10.55	-11627	-543.98	18620	10000.32	18.384	Si
SLU 79	11.35	-10478	18.23	16782	9276.52	508.874	Si
SLU 39	10.55	-10037	-488.83	16074	8982.73	18.376	Si
SLU 39	11.35	-9146	-95.62	14648	8364.34	87.472	Si
SLU 81	10.55	-11972	-573.3	19173	10206.7	17.803	Si
SLU 81	11.35	-10824	-100.29	17335	9500.27	94.732	Si
SLU 77	10.55	-12033	-566.9	19271	10242.74	18.068	Si
SLU 77	11.35	-10885	-6.43	17433	9539.4	1000	Si
SLU 32	10.55	-10052	-484.39	16099	8993.1	18.566	Si
SLU 32	11.35	-9162	-53.77	14673	8375.32	155.762	Si
SLU 60	10.55	-10978	-516.08	17581	9598.43	18.599	Si
SLU 60	11.35	-9844	-85.47	15766	8852.01	103.566	Si

Verifica a pressoflessione nel piano secondo D.M. 17-01-18 NTC §7.8.2.2.1 in combinazioni sismiche, γM = 2

Comb.	Quota	N	M	σ0	Mu	c.s.	Verifica
SLV 14	10.55	-9855	-1212.13	15784	9569.36	7.895	Si
SLV 14	11.35	-8941	4001.19	14319	8800.48	2.199	Si
SLV 13	10.55	-9855	-1212.13	15784	9569.36	7.895	Si
SLV 13	11.35	-8941	4001.19	14319	8800.48	2.199	Si
SLV 15	10.55	-8154	-1210.64	13060	8120.42	6.708	Si
SLV 15	11.35	-7293	3924.54	11680	7354.44	1.874	Si
SLV 4	10.55	-6468	451.66	10358	6600.04	14.613	Si
SLV 4	11.35	-5623	-4093.93	9005	5807.27	1.419	Si
SLV 16	10.55	-8154	-1210.64	13060	8120.42	6.708	Si
SLV 16	11.35	-7293	3924.54	11680	7354.44	1.874	Si
SLV 8	10.55	-5073	-128.41	8125	5280.71	41.125	Si
SLV 8	11.35	-4285	-1376.9	6863	4509.75	3.275	Si
SLV 1	10.55	-8169	450.18	13082	8132.86	18.066	Si
SLV 1	11.35	-7270	-4017.28	11643	7333.74	1.826	Si
SLV 7	10.55	-5073	-128.41	8125	5280.71	41.125	Si
SLV 7	11.35	-4285	-1376.9	6863	4509.75	3.275	Si
SLV 2	10.55	-8169	450.18	13082	8132.86	18.066	Si
SLV 2	11.35	-7270	-4017.28	11643	7333.74	1.826	Si
SLV 3	10.55	-6468	451.66	10358	6600.04	14.613	Si
SLV 3	11.35	-5623	-4093.93	9005	5807.27	1.419	Si

Verifica a taglio nel piano secondo D.M. 17-01-18 (N.T.C.) §7.8.2.2.2 con rottura per scorrimento in combinazioni non sismiche, γM = 3

Comb.	Quota	N	V par	M	σ0	σN	l'	fvd	Vt scorr.	Vt fess.diag.	Vt,lim	c.s.	Verifica
SLU 56	10.55	-11039	-638	-509.68		17679	2.23	7913	4941			7.75	Si
SLU 56	11.35	-9906	-638	8.39		15864	2.23	7671	4790			7.51	Si
SLU 48	10.55	-10019	-606	-450.42		16047	2.23	7695	4805			7.93	Si
SLU 48	11.35	-8886	-606	42.23		14231	2.23	7453	4654			7.68	Si
SLU 80	10.55	-11696	-640	-482.08		18732	2.23	8053	5028			7.86	Si
SLU 80	11.35	-10548	-640	36.6		16893	2.23	7808	4875			7.62	Si
SLU 83	10.55	-12018	-646	-571.34		19247	2.23	8122	5071			7.86	Si
SLU 83	11.35	-10870	-646	-48.28		17408	2.23	7877	4918			7.62	Si
SLU 71	10.55	-10607	-663	-484.72		16987	2.23	7821	4883			7.37	Si
SLU 71	11.35	-9459	-663	52.07		15149	2.23	7575	4730			7.14	Si
SLU 58	10.55	-10633	-640	-486.76		17028	2.23	7826	4887			7.64	Si
SLU 58	11.35	-9499	-640	33.04		15213	2.23	7584	4735			7.4	Si
SLU 50	10.55	-9613	-608	-427.5		15395	2.23	7608	4751			7.81	Si
SLU 50	11.35	-8479	-608	66.88		13580	2.23	7366	4599			7.57	Si
SLU 69	10.55	-11014	-661	-507.64		17639	2.23	7907	4937			7.48	Si
SLU 69	11.35	-9865	-661	27.41		15800	2.23	7662	4784			7.24	Si
SLU 77	10.55	-12033	-692	-566.9		19271	2.23	8125	5073			7.33	Si
SLU 77	11.35	-10885	-692	-6.43		17433	2.23	7880	4920			7.11	Si
SLU 79	10.55	-11627	-694	-543.98		18620	2.23	8038	5019			7.23	Si
SLU 79	11.35	-10478	-694	18.23		16782	2.23	7793	4866			7.01	Si

Verifica a taglio nel piano secondo D.M. 17-01-18 (N.T.C.) §7.8.2.2.2 con rottura per scorrimento in combinazioni sismiche, γM = 2

Comb.	Quota	N	V par	M	σ0	σN	l'	fvd	Vt scorr.	Vt fess.diag.	Vt,lim	c.s.	Verifica
SLV 1	10.55	-8169	5442	450.18		13082	2.23	10950	6837			1.26	Si
SLV 1	11.35	-7270	5166	-4017.28		15389	1.6873	11411	5391			1.04	Si
SLV 9	10.55	-11250	-3308	-632.06		18017	2.23	11937	7453			2.25	Si
SLV 9	11.35	-10278	-3088	1284.16		16460	2.23	11625	7259			2.35	Si
SLV 4	10.55	-6468	6070	451.66		10358	2.23	10405	6497			1.07	Si
SLV 4	11.35	-5623	5719	-4093.93		17301	1.1607	11794	3833			0.67	No, Vu<V
SLV 10	10.55	-11250	-3308	-632.06		18017	2.23	11937	7453			2.25	Si
SLV 10	11.35	-10278	-3088	1284.16		16460	2.23	11625	7259			2.35	Si
SLV 14	10.55	-9855	-6892	-1212.13		15784	2.23	11490	7174			1.04	Si
SLV 14	11.35	-8941	-6540	4001.19		15946	2.0024	11523	6460			0.99	No, Vu<V
SLV 3	10.55	-6468	6070	451.66		10358	2.23	10405	6497			1.07	Si
SLV 3	11.35	-5623	5719	-4093.93		17301	1.1607	11794	3833			0.67	No, Vu<V
SLV 16	10.55	-8154	-6263	-1210.64		13060	2.23	10945	6834			1.09	Si
SLV 16	11.35	-7293	-5988	3924.54		15050	1.7306	11343	5497			0.92	No, Vu<V
SLV 15	10.55	-8154	-6263	-1210.64		13060	2.23	10945	6834			1.09	Si
SLV 15	11.35	-7293	-5988	3924.54		15050	1.7306	11343	5497			0.92	No, Vu<V

Comb.	Quota	N	V par	M	σ0	σN	l'	fvd	Vt scorr.	Vt fess.diag.	Vt,lim	c.s.	Verifica
SLV 13	10.55	-9855	-6892	-1212.13		15784	2.23	11490	7174			1.04	Si
SLV 13	11.35	-8941	-6540	4001.19		15946	2.0024	11523	6460			0.99	No, Vu<V
SLV 2	10.55	-8169	5442	450.18		13082	2.23	10950	6837			1.26	Si
SLV 2	11.35	-7270	5166	-4017.28		15389	1.6873	11411	5391			1.04	Si

Verifica a pressoflessione fuori piano D.M. 17-01-18 (N.T.C.)

quota 10.3 Wa 0.05 denominatore 8 γM = 2

Comb.	fd	Sa	σ0	N	M	Mc	Coeff.s.	Verifica
SLV 12	143750	0.46	8260	-5157	269.46	673.21	2.5	Si
SLV 11	143750	0.46	8260	-5157	269.46	673.21	2.5	Si
SLV 7	143750	0.46	8460	-5283	269.46	688.35	2.55	Si
SLV 8	143750	0.46	8460	-5283	269.46	688.35	2.55	Si
SLV 15	143750	0.46	10999	-6868	269.46	874.93	3.25	Si
SLV 16	143750	0.46	10999	-6868	269.46	874.93	3.25	Si
SLV 4	143750	0.46	11668	-7285	269.46	922.55	3.42	Si
SLV 3	143750	0.46	11668	-7285	269.46	922.55	3.42	Si
SLV 13	143750	0.46	13548	-8459	269.46	1052.97	3.91	Si
SLV 14	143750	0.46	13548	-8459	269.46	1052.97	3.91	Si

Verifica dei meccanismi locali di collasso con analisi cinematica lineare

forza di aggancio al piano = 0 quota mezzeria = 10.3 Wa = 0.05 Ta = 0.0731

Comb.	N top	N base	V orto	α0	M*	e*	a0*	aLim	Verifica
SLV 14	-6060	-7520	18	0.048	932.4	0.915	0.75474	10.21601	No
SLV 13	-6060	-7520	18	0.048	932.4	0.915	0.75474	10.21601	No
SLV 10	-6929	-10335	56	0.043	1019.5	0.921	0.6717	9.02602	No
SLV 9	-6929	-10335	56	0.043	1019.5	0.921	0.6717	9.02602	No
SLV 5	-6775	-11018	55	0.043	1004.1	0.92	0.67492	9.02602	No
SLV 6	-6775	-11018	55	0.043	1004.1	0.92	0.67492	9.02602	No
SLV 2	-5547	-9798	15	0.048	881.3	0.912	0.77297	10.21601	No
SLV 1	-5547	-9798	15	0.048	881.3	0.912	0.77297	10.21601	No
SLV 16	-5161	-5791	-15	0.049	842.9	0.909	0.78181	10.21601	No
SLV 15	-5161	-5791	-15	0.049	842.9	0.909	0.78181	10.21601	No

Tabella dei coefficienti di sicurezza minimi

Stato limite	Coeff.s.	Comb.	Verifica
PF_SLU	17.803	SLU 81	Si
V_SLU	7.007	SLU 79	Si
PF_SLV	1.419	SLV 3	Si
V_SLV	0.67	SLV 3	No
PFFP_SLV	2.498	SLV 11	Si
R_SLV	0.074	SLV 13	No

Maschio 165

Verifiche condotte secondo D.M. 17-01-18 (N.T.C.)

Dati geometrici

X ini.	Y ini.	X fin.	Y fin.	Quota i.	Quota.s	l	Sp.	h netta	h ini.	h fin.	a	a.s.,sx	a.s.,dx
-18.277	-3.183	-18.787	-3.183	L5	L6	0.51	0.28	3.5	3.5	3.5			

Caratteristiche del materiale

(Circolare 7 21-01-19 C8.5.I) Muratura in mattoni pieni e malta di calce LC2_Corti

fb	fk	fvk0	fmedio	τ0	fv0	μ	ϕ	fv,lim	E	G	FC
600000			345000	9000	20000	0.58	0.77	32500	320000000	128000000	1.2

Verifica a pressoflessione nel piano secondo D.M. 17-01-18 NTC §7.8.2.2.1 in combinazioni non sismiche, γM = 3

Comb.	Quota	N	M	σ0	Mu	c.s.	Verifica
SLU 67	10.55	-2554	22.32	17886	508.28	22.775	Si
SLU 67	11.35	-2392	137.27	16753	484.58	3.53	Si
SLU 65	10.55	-2429	26.18	17009	490.04	18.72	Si
SLU 65	11.35	-2226	131.28	15587	458.98	3.496	Si
SLU 76	10.55	-2687	24.28	18814	526.87	21.698	Si
SLU 76	11.35	-2539	142.8	17779	506.1	3.544	Si
SLU 70	10.55	-2554	20.96	17882	508.21	24.243	Si
SLU 70	11.35	-2397	138.51	16784	485.25	3.503	Si
SLU 71	10.55	-2481	14.67	17375	497.74	33.937	Si
SLU 71	11.35	-2360	135.02	16524	479.65	3.553	Si
SLU 68	10.55	-2428	24.82	17005	489.96	19.739	Si
SLU 68	11.35	-2230	132.52	15618	459.68	3.469	Si
SLU 78	10.55	-2812	20.42	19691	543.69	26.623	Si
SLU 78	11.35	-2705	148.8	18945	529.41	3.558	Si
SLU 80	10.55	-2707	19.41	18960	529.71	27.296	Si
SLU 80	11.35	-2593	144.55	18160	513.86	3.555	Si
SLU 26	10.55	-1969	19.9	13790	417.13	20.958	Si
SLU 26	11.35	-1816	109.78	12720	390.85	3.56	Si
SLU 72	10.55	-2449	19.95	17151	493.04	24.717	Si
SLU 72	11.35	-2285	134.26	16000	468.18	3.487	Si

Verifica a pressoflessione nel piano secondo D.M. 17-01-18 NTC §7.8.2.2.1 in combinazioni sismiche, γM = 2

Comb.	Quota	N	M	σ0	Mu	c.s.	Verifica
SLV 2	10.55	-4150	516.88	29059	806.49	1.56	Si
SLV 2	11.35	-3216	-602.57	22523	668.97	1.11	Si
SLV 1	10.55	-4150	516.88	29059	806.49	1.56	Si
SLV 1	11.35	-3216	-602.57	22523	668.97	1.11	Si
SLV 12	10.55	-711	-212.03	0	0	0	No, e>l/2

Comb.	Quota	N	M	σ0	Mu	c.s.	Verifica
SLV 12	11.35	-2264	249.04	15857	502.48	2.018	Si
SLV 9	10.55	-1934	-47.94	13545	438.54	9.148	Si
SLV 9	11.35	-422	388.71	0	0	0	No, e>l/2
SLV 16	10.55	284	-489.65	0	0	0	No, Trazione
SLV 16	11.35	-462	805.37	0	0	0	No, e>l/2
SLV 10	10.55	-1934	-47.94	13545	438.54	9.148	Si
SLV 10	11.35	-422	388.71	0	0	0	No, e>l/2
SLV 11	10.55	-711	-212.03	0	0	0	No, e>l/2
SLV 11	11.35	-2264	249.04	15857	502.48	2.018	Si
SLV 13	10.55	-83	-440.43	0	0	0	No, e>l/2
SLV 13	11.35	90	847.27	0	0	0	No, Trazione
SLV 14	10.55	-83	-440.43	0	0	0	No, e>l/2
SLV 14	11.35	90	847.27	0	0	0	No, Trazione
SLV 15	10.55	284	-489.65	0	0	0	No, Trazione
SLV 15	11.35	-462	805.37	0	0	0	No, e>l/2

Verifica a taglio nel piano secondo D.M. 17-01-18 (N.T.C.) §7.8.2.2.2 con rottura per scorrimento in combinazioni non sismiche, γM = 3

Comb.	Quota	N	V par	M	σ0	σN	l'	fvd	Vt scorr.	Vt fess.diag.	Vt,lim	c.s.	Verifica
SLU 71	10.55	-2481	-166	14.67		17375	0.51	7872	1124			6.75	Si
SLU 71	11.35	-2360	-166	135.02		16524	0.51	7759	1108			6.66	Si
SLU 77	10.55	-2844	-190	15.14		19915	0.51	8211	1173			6.17	Si
SLU 77	11.35	-2780	-190	149.55		19469	0.51	8151	1164			6.12	Si
SLU 74	10.55	-2844	-186	16.5		19918	0.51	8211	1173			6.29	Si
SLU 74	11.35	-2776	-186	148.31		19438	0.51	8147	1163			6.24	Si
SLU 84	10.55	-2819	-179	20.53		19739	0.51	8187	1169			6.55	Si
SLU 84	11.35	-2721	-176	147.71		19054	0.51	8096	1156			6.55	Si
SLU 83	10.55	-2851	-190	15.25		19963	0.51	8217	1173			6.19	Si
SLU 83	11.35	-2796	-190	148.47		19579	0.51	8166	1166			6.15	Si
SLU 81	10.55	-2851	-186	16.6		19967	0.51	8218	1173			6.31	Si
SLU 81	11.35	-2791	-186	147.23		19548	0.51	8162	1166			6.27	Si
SLU 69	10.55	-2585	-171	15.68		18106	0.51	7970	1138			6.64	Si
SLU 69	11.35	-2472	-171	139.27		17309	0.51	7863	1123			6.56	Si
SLU 80	10.55	-2707	-174	19.41		18960	0.51	8084	1154			6.62	Si
SLU 80	11.35	-2593	-172	144.55		18160	0.51	7977	1139			6.62	Si
SLU 78	10.55	-2812	-179	20.42		19691	0.51	8181	1168			6.52	Si
SLU 78	11.35	-2705	-177	148.8		18945	0.51	8082	1154			6.52	Si
SLU 79	10.55	-2739	-185	14.13		19184	0.51	8113	1159			6.25	Si
SLU 79	11.35	-2668	-185	145.3		18685	0.51	8047	1149			6.2	Si

Verifica a taglio nel piano secondo D.M. 17-01-18 (N.T.C.) §7.8.2.2.2 con rottura per scorrimento in combinazioni sismiche, γM = 2

Comb.	Quota	N	V par	M	σ0	σN	l'	fvd	Vt scorr.	Vt fess.diag.	Vt,lim	c.s.	Verifica
SLV 15	10.55	284	-1616	-489.65		0	0	8333	0			0	No, Vu<V
SLV 15	11.35	-462	-1680	805.37		0	0	8333	0			0	No, Vu<V
SLV 9	10.55	-1934	-846	-47.94		13545	0.51	11042	1577			1.86	Si
SLV 9	11.35	-422	-654	388.71		0	0	8333	0			0	No, Vu<V
SLV 14	10.55	-83	-1768	-440.43		0	0	8333	0			0	No, Vu<V
SLV 14	11.35	90	-1715	847.27		0	0	8333	0			0	No, Vu<V
SLV 11	10.55	-711	-339	-212.03		0	0	8333	0			0	No, Vu<V
SLV 11	11.35	-2264	-536	249.04		18589	0.435	12051	1468			2.74	Si
SLV 1	10.55	-4150	1371	516.88		37872	0.3913	15908	1743			1.27	Si
SLV 1	11.35	-3216	1436	-602.57		56599	0.2029	16250	923			0.64	No, Vu<V
SLV 10	10.55	-1934	-846	-47.94		13545	0.51	11042	1577			1.86	Si
SLV 10	11.35	-422	-654	388.71		0	0	8333	0			0	No, Vu<V
SLV 13	10.55	-83	-1768	-440.43		0	0	8333	0			0	No, Vu<V
SLV 13	11.35	90	-1715	847.27		0	0	8333	0			0	No, Vu<V
SLV 2	10.55	-4150	1371	516.88		37872	0.3913	15908	1743			1.27	Si
SLV 2	11.35	-3216	1436	-602.57		56599	0.2029	16250	923			0.64	No, Vu<V
SLV 16	10.55	284	-1616	-489.65		0	0	8333	0			0	No, Vu<V
SLV 16	11.35	-462	-1680	805.37		0	0	8333	0			0	No, Vu<V
SLV 12	10.55	-711	-339	-212.03		0	0	8333	0			0	No, Vu<V
SLV 12	11.35	-2264	-536	249.04		18589	0.435	12051	1468			2.74	Si

Verifica a pressoflessione fuori piano D.M. 17-01-18 (N.T.C.)

quota 10.3 Wa 0.05 denominatore 8 γM = 2

Comb.	fd	Sa	σ0	N	M	Mc	Coeff.s.	Verifica
SLV 16	143750	0.46	3803	-543	61.63	73.67	1.2	Si
SLV 15	143750	0.46	3803	-543	61.63	73.67	1.2	Si
SLV 11	143750	0.46	4858	-694	61.63	93.25	1.51	Si
SLV 12	143750	0.46	4858	-694	61.63	93.25	1.51	Si
SLV 13	143750	0.46	6454	-922	61.63	122.22	1.98	Si
SLV 14	143750	0.46	6454	-922	61.63	122.22	1.98	Si
SLV 7	143750	0.46	8412	-1201	61.63	156.6	2.54	Si
SLV 8	143750	0.46	8412	-1201	61.63	156.6	2.54	Si
SLV 10	143750	0.46	13694	-1956	61.63	243.1	3.94	Si
SLV 9	143750	0.46	13694	-1956	61.63	243.1	3.94	Si

Verifica dei meccanismi locali di collasso con analisi cinematica lineare

forza di aggancio al piano = 0 quota mezzeria = 10.3 Wa = 0.05 Ta = 0.0731

Comb.	N top	N base	V orto	α0	M*	e*	a0*	aLim	Verifica
SLV 13	13	-1456	1	0	0	0	0	10.21601	No, Trazione
SLV 14	13	-1456	1	0	0	0	0	10.21601	No, Trazione
SLV 3	-1699	-1372	-2	0.047	244.6	0.924	0.74453	10.21601	No
SLV 4	-1699	-1372	-2	0.047	244.6	0.924	0.74453	10.21601	No
SLV 1	-1474	-1520	-1	0.049	222.1	0.918	0.77715	10.21601	No
SLV 2	-1474	-1520	-1	0.049	222.1	0.918	0.77715	10.21601	No
SLV 8	-1441	-1177	-4	0.048	218.8	0.917	0.75369	9.02602	No
SLV 7	-1441	-1177	-4	0.048	218.8	0.917	0.75369	9.02602	No
SLV 11	-995	-1158	-3	0.05	174.4	0.903	0.80835	9.02602	No
SLV 12	-995	-1158	-3	0.05	174.4	0.903	0.80835	9.02602	No

Tabella dei coefficienti di sicurezza minimi

Stato limite	Coeff.s.	Comb.	Verifica
PF_SLU	3.469	SLU 68	Si
V_SLU	6.123	SLU 77	Si
PF_SLV	0	SLV 16	No
V_SLV	0	SLV 9	No
PFFP_SLV	1.195	SLV 15	Si
R_SLV	0	SLV 14	No

Maschio 166

Verifiche condotte secondo D.M. 17-01-18 (N.T.C.)

Dati geometrici

X ini.	Y ini.	X fin.	Y fin.	Quota i.	Quota.s	l	Sp.	h netta	h ini.	h fin.	a	a.s.,sx	a.s.,dx
-19.663	5.937	-19.663	6.64	L5	L6	0.703	0.28	3.5	3.5	3.5			

Caratteristiche del materiale

(Circolare 7 21-01-19 C8.5.I) Muratura in mattoni pieni e malta di calce LC2_Corti

fb	fk	fvk0	fmedio	τ0	fv0	μ	ϕ	fv,lim	E	G	FC
600000			345000	9000	20000	0.58	0.77	32500	320000000	128000000	1.2

Verifica a pressoflessione nel piano secondo D.M. 17-01-18 NTC §7.8.2.2.1 in combinazioni non sismiche, γM = 3

Comb.	Quota	N	M	σ0	Mu	c.s.	Verifica
SLU 33	8.55	-4771	-29.63	24243	1177.63	39.747	Si
SLU 33	12.05	-2659	30.18	13514	779.54	25.826	Si
SLU 42	8.55	-4874	-34.57	24768	1192.09	34.487	Si
SLU 42	12.05	-2670	30.3	13567	781.99	25.812	Si
SLU 41	8.55	-4886	-35.14	24829	1193.73	33.971	Si
SLU 41	12.05	-2681	29.92	13625	784.67	26.23	Si
SLU 39	8.55	-4685	-35.09	23806	1165.24	33.204	Si
SLU 39	12.05	-2486	33.47	12634	738.25	22.057	Si
SLU 40	8.55	-4673	-34.52	23746	1163.5	33.706	Si
SLU 40	12.05	-2475	33.85	12576	735.47	21.727	Si
SLU 81	8.55	-5574	-33.41	28326	1277.76	38.24	Si
SLU 81	12.05	-2956	33.36	15018	847.15	25.391	Si
SLU 31	8.55	-4473	-28.02	22728	1133.26	40.449	Si
SLU 31	12.05	-2374	28.73	12061	710.61	24.738	Si
SLU 19	8.55	-4169	-25.05	21187	1084.14	43.279	Si
SLU 19	12.05	-2190	26.44	11130	664.57	25.14	Si
SLU 82	8.55	-5562	-32.84	28265	1276.48	38.869	Si
SLU 82	12.05	-2944	33.75	14960	844.61	25.029	Si
SLU 18	8.55	-4181	-25.62	21247	1086.14	42.388	Si
SLU 18	12.05	-2202	26.05	11188	667.49	25.619	Si

Verifica a pressoflessione nel piano secondo D.M. 17-01-18 NTC §7.8.2.2.1 in combinazioni sismiche, γM = 2

Comb.	Quota	N	M	σ0	Mu	c.s.	Verifica
SLV 6	8.55	-2302	-184.85	11700	731.65	3.958	Si
SLV 6	12.05	-1382	335.49	7023	457.79	1.365	Si
SLV 14	8.55	-2468	396.22	12540	778.21	1.964	Si
SLV 14	12.05	-1097	116.51	5575	367.94	3.158	Si
SLV 13	8.55	-2468	396.22	12540	778.21	1.964	Si
SLV 13	12.05	-1097	116.51	5575	367.94	3.158	Si
SLV 1	8.55	-4104	-447.97	20852	1196	2.67	Si
SLV 1	12.05	-2456	105.16	12480	774.94	7.369	Si
SLV 10	8.55	-1812	68.4	9206	588.69	8.606	Si
SLV 10	12.05	-974	338.89	4952	328.56	0.97	No, M>Mu
SLV 9	8.55	-1812	68.4	9206	588.69	8.606	Si
SLV 9	12.05	-974	338.89	4952	328.56	0.97	No, M>Mu
SLV 15	8.55	-3521	423.94	17891	1056.13	2.491	Si
SLV 15	12.05	-1610	-77.51	8180	527.85	6.81	Si
SLV 16	8.55	-3521	423.94	17891	1056.13	2.491	Si
SLV 16	12.05	-1610	-77.51	8180	527.85	6.81	Si
SLV 5	8.55	-2302	-184.85	11700	731.65	3.958	Si
SLV 5	12.05	-1382	335.49	7023	457.79	1.365	Si
SLV 2	8.55	-4104	-447.97	20852	1196	2.67	Si
SLV 2	12.05	-2456	105.16	12480	774.94	7.369	Si

Verifica a taglio nel piano secondo D.M. 17-01-18 (N.T.C.) §7.8.2.2.2 con rottura per scorrimento in combinazioni non sismiche, γM = 3

Comb.	Quota	N	V par	M	σ0	σN	l'	fvd	Vt scorr.	Vt fess.diag.	Vt,lim	c.s.	Verifica
SLU 39	8.55	-4685	-297	-35.09		23806	0.7028	8730	1718			5.78	Si
SLU 39	12.05	-2486	-150	33.47		12634	0.7028	7240	1425			9.5	Si
SLU 42	8.55	-4874	-305	-34.57		24768	0.7028	8858	1743			5.71	Si
SLU 42	12.05	-2670	-134	30.3		13567	0.7028	7364	1449			10.86	Si
SLU 40	8.55	-4673	-296	-34.52		23746	0.7028	8722	1716			5.8	Si
SLU 40	12.05	-2475	-152	33.85		12576	0.7028	7232	1423			9.37	Si
SLU 84	8.55	-5764	-318	-32.89		29287	0.7028	9461	1862			5.85	Si
SLU 84	12.05	-3139	-127	30.19		15951	0.7028	7682	1512			11.91	Si
SLU 35	8.55	-4984	-286	-30.25		25326	0.7028	8932	1758			6.16	Si
SLU 35	12.05	-2866	-106	26.25		14562	0.7028	7497	1475			13.9	Si
SLU 36	8.55	-4972	-285	-29.68		25266	0.7028	8924	1756			6.17	Si
SLU 36	12.05	-2854	-108	26.63		14504	0.7028	7489	1474			13.66	Si
SLU 83	8.55	-5776	-319	-33.46		29348	0.7028	9469	1863			5.83	Si
SLU 83	12.05	-3150	-125	29.81		16009	0.7028	7690	1513			12.09	Si
SLU 81	8.55	-5574	-310	-33.41		28326	0.7028	9332	1837			5.92	Si
SLU 81	12.05	-2956	-144	33.36		15018	0.7028	7558	1487			10.36	Si
SLU 82	8.55	-5562	-309	-32.84		28265	0.7028	9324	1835			5.93	Si

Comb.	Quota	N	V par	M	σ0	σN	l'	fvd	Vt scorr.	Vt fess.diag.	Vt,lim	c.s.	Verifica
SLU 82	12.05	-2944	-145	33.75		14960	0.7028	7550	1486			10.22	Si
SLU 41	8.55	-4886	-306	-35.14		24829	0.7028	8866	1745			5.7	Si
SLU 41	12.05	-2681	-132	29.92		13625	0.7028	7372	1451			11.02	Si

Verifica a taglio nel piano secondo D.M. 17-01-18 (N.T.C.) §7.8.2.2.2 con rottura per scorrimento in combinazioni sismiche, γM = 2

Comb.	Quota	N	V par	M	σ0	σN	l'	fvd	Vt scorr.	Vt fess.diag.	Vt,lim	c.s.	Verifica
SLV 1	8.55	-4104	-2429	-447.97		20852	0.7028	12504	2461			1.01	Si
SLV 1	12.05	-2456	-1697	105.16		12480	0.7028	10829	2131			1.26	Si
SLV 9	8.55	-1812	-601	68.4		9206	0.7028	10175	2002			3.33	Si
SLV 9	12.05	-974	-1007	338.89		318576	0.0109	16250	50			0.05	No, Vu<V
SLV 10	8.55	-1812	-601	68.4		9206	0.7028	10175	2002			3.33	Si
SLV 10	12.05	-974	-1007	338.89		318576	0.0109	16250	50			0.05	No, Vu<V
SLV 13	8.55	-2468	1497	396.22		15392	0.5726	11412	1830			1.22	Si
SLV 13	12.05	-1097	798	116.51		5575	0.7028	9448	1859			2.33	Si
SLV 6	8.55	-2302	-1778	-184.85		11700	0.7028	10673	2100			1.18	Si
SLV 6	12.05	-1382	-1755	335.49		15139	0.3261	11361	1037			0.59	No, Vu<V
SLV 15	8.55	-3521	2117	423.94		18144	0.693	11962	2321			1.1	Si
SLV 15	12.05	-1610	1596	-77.51		8180	0.7028	9969	1962			1.23	Si
SLV 2	8.55	-4104	-2429	-447.97		20852	0.7028	12504	2461			1.01	Si
SLV 2	12.05	-2456	-1697	105.16		12480	0.7028	10829	2131			1.26	Si
SLV 16	8.55	-3521	2117	423.94		18144	0.693	11962	2321			1.1	Si
SLV 16	12.05	-1610	1596	-77.51		8180	0.7028	9969	1962			1.23	Si
SLV 5	8.55	-2302	-1778	-184.85		11700	0.7028	10673	2100			1.18	Si
SLV 5	12.05	-1382	-1755	335.49		15139	0.3261	11361	1037			0.59	No, Vu<V
SLV 14	8.55	-2468	1497	396.22		15392	0.5726	11412	1830			1.22	Si
SLV 14	12.05	-1097	798	116.51		5575	0.7028	9448	1859			2.33	Si

Verifica a pressoflessione fuori piano D.M. 17-01-18 (N.T.C.)

quota 10.3 Wa 0.05 denominatore 8 γM = 2

Comb.	fd	Sa	σ0	N	M	Mc	Coeff.s.	Verifica
SLV 10	143750	0.46	8596	-1692	86.9	220.16	2.53	Si
SLV 9	143750	0.46	8596	-1692	86.9	220.16	2.53	Si
SLV 13	143750	0.46	9908	-1950	86.9	250.85	2.89	Si
SLV 14	143750	0.46	9908	-1950	86.9	250.85	2.89	Si
SLV 5	143750	0.46	10529	-2072	86.9	265.1	3.05	Si
SLV 6	143750	0.46	10529	-2072	86.9	265.1	3.05	Si
SLV 16	143750	0.46	12967	-2552	86.9	319.34	3.67	Si
SLV 15	143750	0.46	12967	-2552	86.9	319.34	3.67	Si
SLV 2	143750	0.46	16353	-3218	86.9	390.25	4.49	Si
SLV 1	143750	0.46	16353	-3218	86.9	390.25	4.49	Si

Verifica dei meccanismi locali di collasso con analisi cinematica lineare

forza di aggancio al piano = 0 quota mezzeria = 10.3 Wa = 0.05 Ta = 0.0731

Comb.	N top	N base	V orto	α0	M*	e*	a0*	aLim	Verifica
SLV 3	-2969	-5157	1	0.047	400.4	0.933	0.72479	10.21601	No
SLV 4	-2969	-5157	1	0.047	400.4	0.933	0.72479	10.21601	No
SLV 2	-2456	-4104	0	0.048	348.7	0.926	0.75365	10.21601	No
SLV 1	-2456	-4104	0	0.048	348.7	0.926	0.75365	10.21601	No
SLV 7	-3091	-5813	2	0.046	412.8	0.935	0.71535	9.02602	No
SLV 8	-3091	-5813	2	0.046	412.8	0.935	0.71535	9.02602	No
SLV 16	-1610	-3521	0	0.051	264	0.909	0.81423	10.21601	No
SLV 15	-1610	-3521	0	0.051	264	0.909	0.81423	10.21601	No
SLV 11	-2684	-5322	2	0.047	371.6	0.929	0.73393	9.02602	No
SLV 12	-2684	-5322	2	0.047	371.6	0.929	0.73393	9.02602	No

Tabella dei coefficienti di sicurezza minimi

Stato limite	Coeff.s.	Comb.	Verifica
PF_SLU	21.727	SLU 40	Si
V_SLU	5.698	SLU 41	Si
PF_SLV	0.97	SLV 9	No
V_SLV	0.049	SLV 9	No
PFFP_SLV	2.533	SLV 9	Si
R_SLV	0.071	SLV 3	No

Maschio 167

Verifiche condotte secondo D.M. 17-01-18 (N.T.C.)

Dati geometrici

X ini.	Y ini.	X fin.	Y fin.	Quota i.	Quota.s	l	Sp.	h netta	h ini.	h fin.	a	a.s.,sx	a.s.,dx
-19.57	1.141	-19.57	5.797	L5	L6	4.656	0.14	3.5	3.5	3.5			

Caratteristiche del materiale

(Circolare 7 21-01-19 C8.5.I) Muratura in mattoni pieni e malta di calce LC2_Corti

fb	fk	fvk0	fmedio	τ0	fv0	μ	ϕ	fv,lim	E	G	FC
600000			345000	9000	20000	0.58	0.77	32500	320000000	128000000	1.2

Verifica a pressoflessione nel piano secondo D.M. 17-01-18 NTC §7.8.2.2.1 in combinazioni non sismiche, γM = 3

Comb.	Quota	N	M	σ0	Mu	c.s.	Verifica
SLU 70	8.55	-17358	-329.61	26629	27198.72	82.517	Si
SLU 70	12.05	-9978	-782.49	15307	18863.21	24.107	Si
SLU 47	8.55	-14780	-325.3	22674	24829.71	76.328	Si
SLU 47	12.05	-8363	-705.82	12830	16402.37	23.239	Si
SLU 51	8.55	-15451	-375.06	23703	25502.26	67.995	Si
SLU 51	12.05	-8996	-723.57	13801	17393.84	24.039	Si

Comb.	Quota	N	M	σ0	Mu	c.s.	Verifica
SLU 4	8.55	-12236	-260.56	18772	21920.99	84.132	Si
SLU 4	12.05	-6979	-618.49	10707	14111.25	22.816	Si
SLU 44	8.55	-14094	-232.45	21622	24101.2	103.685	Si
SLU 44	12.05	-7707	-641.22	11823	15336.81	23.918	Si
SLU 7	8.55	-12922	-353.41	19824	22761.24	64.404	Si
SLU 7	12.05	-7635	-683.09	11713	15218.69	22.279	Si
SLU 49	8.55	-15739	-401.02	24145	25779.03	64.283	Si
SLU 49	12.05	-9193	-811.76	14103	17695.94	21.8	Si
SLU 5	8.55	-11963	-277.69	18353	21575.07	77.695	Si
SLU 5	12.05	-6805	-577.15	10440	13811.72	23.931	Si
SLU 48	8.55	-15716	-336.38	24111	25757.51	76.573	Si
SLU 48	12.05	-9158	-741.49	14049	17642	23.793	Si
SLU 46	8.55	-15053	-308.17	23093	25108.2	81.476	Si
SLU 46	12.05	-8537	-747.16	13096	16678.16	22.322	Si

Verifica a pressoflessione nel piano secondo D.M. 17-01-18 NTC §7.8.2.2.1 in combinazioni sismiche, γM = 2

Comb.	Quota	N	M	σ0	Mu	c.s.	Verifica
SLV 14	8.55	-7417	-2309.15	11379	15659.43	6.781	Si
SLV 14	12.05	-4097	-1344.15	6285	9046.94	6.731	Si
SLV 7	8.55	-15840	3723.24	24301	29541.42	7.934	Si
SLV 7	12.05	-8704	700.06	13353	18047.86	25.78	Si
SLV 5	8.55	-10731	-2980.56	16463	21615.38	7.252	Si
SLV 5	12.05	-5334	-989.21	8183	11585.17	11.712	Si
SLV 10	8.55	-8376	-3753.6	12850	17448.92	4.649	Si
SLV 10	12.05	-4218	-1425.91	6472	9300.36	6.522	Si
SLV 6	8.55	-10731	-2980.56	16463	21615.38	7.252	Si
SLV 6	12.05	-5334	-989.21	8183	11585.17	11.712	Si
SLV 8	8.55	-15840	3723.24	24301	29541.42	7.934	Si
SLV 8	12.05	-8704	700.06	13353	18047.86	25.78	Si
SLV 11	8.55	-13485	2950.2	20688	26078.22	8.839	Si
SLV 11	12.05	-7589	263.36	11642	15982.76	60.687	Si
SLV 13	8.55	-7417	-2309.15	11379	15659.43	6.781	Si
SLV 13	12.05	-4097	-1344.15	6285	9046.94	6.731	Si
SLV 12	8.55	-13485	2950.2	20688	26078.22	8.839	Si
SLV 12	12.05	-7589	263.36	11642	15982.76	60.687	Si
SLV 9	8.55	-8376	-3753.6	12850	17448.92	4.649	Si
SLV 9	12.05	-4218	-1425.91	6472	9300.36	6.522	Si

Verifica a taglio nel piano secondo D.M. 17-01-18 (N.T.C.) §7.8.2.2.2 con rottura per scorrimento in combinazioni non sismiche, γM = 3

Comb.	Quota	N	V par	M	σ0	σN	I'	fvd	Vt scorr.	Vt fess.diag.	Vt,lim	c.s.	Verifica
SLU 77	8.55	-18757	716	-119.68		28776	4.656	9392	6122			8.55	Si
SLU 77	12.05	-10458	431	-627.69		16043	4.656	7695	5016			11.63	Si
SLU 41	8.55	-15575	667	109.01		23895	4.656	8742	5698			8.55	Si
SLU 41	12.05	-8267	416	-310		12682	4.656	7247	4724			11.37	Si
SLU 81	8.55	-17706	700	154.26		27164	4.656	9177	5982			8.54	Si
SLU 81	12.05	-9168	450	-374.07		14065	4.656	7431	4844			10.76	Si
SLU 42	8.55	-15598	670	44.37		23929	4.656	8746	5701			8.51	Si
SLU 42	12.05	-8302	409	-380.27		12737	4.656	7254	4728			11.56	Si
SLU 79	8.55	-18469	708	-93.72		28333	4.656	9333	6084			8.6	Si
SLU 79	12.05	-10260	410	-539.49		15740	4.656	7654	4989			12.17	Si
SLU 82	8.55	-17729	703	89.61		27198	4.656	9182	5985			8.51	Si
SLU 82	12.05	-9204	444	-444.34		14120	4.656	7438	4848			10.93	Si
SLU 84	8.55	-18415	735	-3.24		28251	4.656	9322	6077			8.27	Si
SLU 84	12.05	-9860	444	-508.94		15127	4.656	7572	4936			11.11	Si
SLU 80	8.55	-18491	711	-158.37		28368	4.656	9338	6087			8.57	Si
SLU 80	12.05	-10296	403	-609.76		15795	4.656	7662	4994			12.38	Si
SLU 78	8.55	-18780	719	-184.33		28810	4.656	9397	6125			8.52	Si
SLU 78	12.05	-10493	425	-697.95		16098	4.656	7702	5020			11.82	Si
SLU 83	8.55	-18392	732	61.4		28216	4.656	9318	6074			8.3	Si
SLU 83	12.05	-9825	451	-438.67		15072	4.656	7565	4931			10.94	Si

Verifica a taglio nel piano secondo D.M. 17-01-18 (N.T.C.) §7.8.2.2.2 con rottura per scorrimento in combinazioni sismiche, γM = 2

Comb.	Quota	N	V par	M	σ0	σN	I'	fvd	Vt scorr.	Vt fess.diag.	Vt,lim	c.s.	Verifica
SLV 14	8.55	-7417	-6131	-2309.15		11379	4.656	10609	6915			1.13	Si
SLV 14	12.05	-4097	-3267	-1344.15		6285	4.656	9590	6251			1.91	Si
SLV 13	8.55	-7417	-6131	-2309.15		11379	4.656	10609	6915			1.13	Si
SLV 13	12.05	-4097	-3267	-1344.15		6285	4.656	9590	6251			1.91	Si
SLV 7	8.55	-15840	11556	3723.24		24301	4.656	13193	8600			0.74	No, Vu<V
SLV 7	12.05	-8704	7991	700.06		13353	4.656	11004	7173			0.9	No, Vu<V
SLV 11	8.55	-13485	9448	2950.2		20688	4.656	12471	8129			0.86	No, Vu<V
SLV 11	12.05	-7589	7202	263.36		11642	4.656	10662	6950			0.96	No, Vu<V
SLV 8	8.55	-15840	11556	3723.24		24301	4.656	13193	8600			0.74	No, Vu<V
SLV 8	12.05	-8704	7991	700.06		13353	4.656	11004	7173			0.9	No, Vu<V
SLV 9	8.55	-8376	-10736	-3753.6		12850	4.656	10903	7107			0.66	No, Vu<V
SLV 9	12.05	-4218	-7488	-1425.91		6472	4.656	9628	6276			0.84	No, Vu<V
SLV 6	8.55	-10731	-8628	-2980.56		16463	4.656	11626	7578			0.88	No, Vu<V
SLV 6	12.05	-5334	-6699	-989.21		8183	4.656	9970	6499			0.97	No, Vu<V
SLV 5	8.55	-10731	-8628	-2980.56		16463	4.656	11626	7578			0.88	No, Vu<V
SLV 5	12.05	-5334	-6699	-989.21		8183	4.656	9970	6499			0.97	No, Vu<V
SLV 12	8.55	-13485	9448	2950.2		20688	4.656	12471	8129			0.86	No, Vu<V
SLV 12	12.05	-7589	7202	263.36		11642	4.656	10662	6950			0.96	No, Vu<V
SLV 10	8.55	-8376	-10736	-3753.6		12850	4.656	10903	7107			0.66	No, Vu<V
SLV 10	12.05	-4218	-7488	-1425.91		6472	4.656	9628	6276			0.84	No, Vu<V

Verifica a pressoflessione fuori piano D.M. 17-01-18 (N.T.C.)

quota 10.3 Wa 0.03 denominatore 8 γM = 2

Comb.	fd	Sa	σ0	N	M	Mc	Coeff.s.	Verifica
SLV 13	143750	0.46	10005	-6521	300.93	419.12	1.39	Si
SLV 14	143750	0.46	10005	-6521	300.93	419.12	1.39	Si

Comb.	fd	Sa	σ0	N	M	Mc	Coeff.s.	Verifica
SLV 9	143750	0.46	10767	-7018	300.93	447.97	1.49	Si
SLV 10	143750	0.46	10767	-7018	300.93	447.97	1.49	Si
SLV 15	143750	0.46	11462	-7471	300.93	473.93	1.57	Si
SLV 16	143750	0.46	11462	-7471	300.93	473.93	1.57	Si
SLV 5	143750	0.46	12877	-8393	300.93	525.63	1.75	Si
SLV 6	143750	0.46	12877	-8393	300.93	525.63	1.75	Si
SLV 11	143750	0.46	15624	-10184	300.93	621.73	2.07	Si
SLV 12	143750	0.46	15624	-10184	300.93	621.73	2.07	Si

Verifica dei meccanismi locali di collasso con analisi cinematica lineare

forza di aggancio al piano = 0 quota mezzeria = 10.3 Wa = 0.03 Ta = 0.1461

Comb.	N top	N base	V orto	α0	M*	e*	a0*	aLim	Verifica
SLV 10	-4218	-8376	-58	0.017	764.5	0.901	0.27813	18.80115	No
SLV 9	-4218	-8376	-58	0.017	764.5	0.901	0.27813	18.80115	No
SLV 7	-8704	-15840	59	0.018	1212.2	0.928	0.28672	18.80115	No
SLV 8	-8704	-15840	59	0.018	1212.2	0.928	0.28672	18.80115	No
SLV 11	-7589	-13485	46	0.02	1100	0.923	0.30735	18.80115	No
SLV 12	-7589	-13485	46	0.02	1100	0.923	0.30735	18.80115	No
SLV 6	-5334	-10731	-45	0.019	874.5	0.909	0.31144	18.80115	No
SLV 5	-5334	-10731	-45	0.019	874.5	0.909	0.31144	18.80115	No
SLV 4	-8825	-16799	38	0.02	1224.5	0.929	0.31671	18.99716	No
SLV 3	-8825	-16799	38	0.02	1224.5	0.929	0.31671	18.99716	No

Tabella dei coefficienti di sicurezza minimi

Stato limite	Coeff.s.	Comb.	Verifica
PF_SLU	21.8	SLU 49	Si
V_SLU	8.272	SLU 84	Si
PF_SLV	4.649	SLV 9	Si
V_SLV	0.662	SLV 9	No
PFFP_SLV	1.393	SLV 13	Si
R_SLV	0.015	SLV 9	No

Maschio 168

Verifiche condotte secondo D.M. 17-01-18 (N.T.C.)

Dati geometrici

X ini.	Y ini.	X fin.	Y fin.	Quota i.	Quota.s	l	Sp.	h netta	h ini.	h fin.	a	a.s.,sx	a.s.,dx
-16.187	-3.183	-17.277	-3.183	L5	L6	1.09	0.28	3.5	3.5	3.5			

Caratteristiche del materiale

(Circolare 7 21-01-19 C8.5.I) Muratura in mattoni pieni e malta di calce LC2_Corti

fb	fk	fvk0	fmedio	τ0	fv0	μ	ϕ	fv,lim	E	G	FC
600000			345000	9000	20000	0.58	0.77	32500	320000000	128000000	1.2

Verifica a pressoflessione nel piano secondo D.M. 17-01-18 NTC §7.8.2.2.1 in combinazioni non sismiche, γM = 3

Comb.	Quota	N	M	σ0	Mu	c.s.	Verifica
SLU 34	9.45	-4182	-686.84	13704	1895.66	2.76	Si
SLU 34	11.35	-4291	464.84	14062	1934.9	4.163	Si
SLU 81	9.45	-5676	-844.89	18599	2386.96	2.825	Si
SLU 81	11.35	-5762	588	18881	2412.22	4.102	Si
SLU 76	9.45	-5234	-813.1	17151	2251.79	2.769	Si
SLU 76	11.35	-5202	573.95	17045	2241.59	3.906	Si
SLU 82	9.45	-5456	-846.8	17878	2320.74	2.741	Si
SLU 82	11.35	-5540	584.73	18152	2346.15	4.012	Si
SLU 42	9.45	-4466	-715.8	14635	1996.68	2.789	Si
SLU 42	11.35	-4657	477.1	15259	2062.3	4.323	Si
SLU 40	9.45	-4404	-720.54	14431	1974.84	2.741	Si
SLU 40	11.35	-4629	475.62	15169	2052.94	4.316	Si
SLU 73	9.45	-5172	-817.84	16947	2232.06	2.729	Si
SLU 73	11.35	-5174	572.47	16955	2232.89	3.9	Si
SLU 23	9.45	-3799	-621.04	12448	1753.86	2.824	Si
SLU 23	11.35	-3757	439.84	12312	1738.17	3.952	Si
SLU 84	9.45	-5518	-842.05	18082	2339.7	2.779	Si
SLU 84	11.35	-5567	586.21	18242	2354.41	4.016	Si
SLU 31	9.45	-4120	-691.58	13500	1873.05	2.708	Si
SLU 31	11.35	-4264	463.36	13972	1925.1	4.155	Si

Verifica a pressoflessione nel piano secondo D.M. 17-01-18 NTC §7.8.2.2.1 in combinazioni sismiche, γM = 2

Comb.	Quota	N	M	σ0	Mu	c.s.	Verifica
SLV 3	9.45	-6424	2167.66	21050	2897.68	1.337	Si
SLV 3	11.35	-1012	-727.51	0	0	0	No, e>l/2
SLV 8	9.45	-3858	1019.35	12642	1884.96	1.849	Si
SLV 8	11.35	105	-190.98	0	0	0	No, Trazione
SLV 10	9.45	-4217	-2164.05	13819	2038.27	0.942	No, M>Mu
SLV 10	11.35	-7922	1040.6	25957	3399.85	3.267	Si
SLV 7	9.45	-3858	1019.35	12642	1884.96	1.849	Si
SLV 7	11.35	105	-190.98	0	0	0	No, Trazione
SLV 4	9.45	-6424	2167.66	21050	2897.68	1.337	Si
SLV 4	11.35	-1012	-727.51	0	0	0	No, e>l/2
SLV 14	9.45	-1651	-3312.36	0	0	0	No, e>l/2
SLV 14	11.35	-6805	1577.12	22297	3031.55	1.922	Si
SLV 9	9.45	-4217	-2164.05	13819	2038.27	0.942	No, M>Mu
SLV 9	11.35	-7922	1040.6	25957	3399.85	3.267	Si
SLV 13	9.45	-1651	-3312.36	0	0	0	No, e>l/2
SLV 13	11.35	-6805	1577.12	22297	3031.55	1.922	Si

Comb.	Quota	N	M	σ0	Mu	c.s.	Verifica
SLV 15	9.45	-1061	-2804.86	0	0	0	No, e>l/2
SLV 15	11.35	-4731	1399.04	15504	2251.28	1.609	Si
SLV 16	9.45	-1061	-2804.86	0	0	0	No, e>l/2
SLV 16	11.35	-4731	1399.04	15504	2251.28	1.609	Si

Verifica a taglio nel piano secondo D.M. 17-01-18 (N.T.C.) §7.8.2.2.2 con rottura per scorrimento in combinazioni non sismiche, γM = 3

Comb.	Quota	N	V par	M	σ0	σN	l'	fvd	Vt scorr.	Vt fess.diag.	Vt,lim	c.s.	Verifica
SLU 77	9.45	-5834	-1632	-823.29		19117	1.0899	8105	2473			1.52	Si
SLU 77	11.35	-5806	-556	598.06		19023	1.0899	8092	2469			4.44	Si
SLU 76	9.45	-5234	-1587	-813.1		17151	1.0899	7842	2393			1.51	Si
SLU 76	11.35	-5202	-608	573.95		17045	1.0899	7828	2389			3.93	Si
SLU 78	9.45	-5614	-1620	-825.2		18396	1.0899	8008	2444			1.51	Si
SLU 78	11.35	-5583	-588	594.79		18295	1.0899	7995	2440			4.15	Si
SLU 84	9.45	-5518	-1672	-842.05		18082	1.0899	7967	2431			1.45	Si
SLU 84	11.35	-5567	-585	586.21		18242	1.0899	7988	2438			4.17	Si
SLU 83	9.45	-5738	-1684	-840.15		18803	1.0899	8063	2461			1.46	Si
SLU 83	11.35	-5789	-554	589.47		18970	1.0899	8085	2467			4.46	Si
SLU 75	9.45	-5552	-1638	-829.94		18192	1.0899	7981	2436			1.49	Si
SLU 75	11.35	-5556	-590	593.31		18205	1.0899	7983	2436			4.13	Si
SLU 73	9.45	-5172	-1604	-817.84		16947	1.0899	7815	2385			1.49	Si
SLU 73	11.35	-5174	-610	572.47		16955	1.0899	7816	2385			3.91	Si
SLU 81	9.45	-5676	-1702	-844.89		18599	1.0899	8035	2452			1.44	Si
SLU 81	11.35	-5762	-556	588		18881	1.0899	8073	2464			4.43	Si
SLU 74	9.45	-5772	-1650	-828.04		18913	1.0899	8077	2465			1.49	Si
SLU 74	11.35	-5778	-559	596.58		18934	1.0899	8080	2466			4.41	Si
SLU 82	9.45	-5456	-1689	-846.8		17878	1.0899	7939	2423			1.43	Si
SLU 82	11.35	-5540	-587	584.73		18152	1.0899	7976	2434			4.15	Si

Verifica a taglio nel piano secondo D.M. 17-01-18 (N.T.C.) §7.8.2.2.2 con rottura per scorrimento in combinazioni sismiche, γM = 2

Comb.	Quota	N	V par	M	σ0	σN	l'	fvd	Vt scorr.	Vt fess.diag.	Vt,lim	c.s.	Verifica
SLV 7	9.45	-3858	1351	1019.35		16360	0.8422	11605	2737			2.03	Si
SLV 7	11.35	105	1142	-190.98		0	0	8333	0			0	No, Vu<V
SLV 3	9.45	-6424	3482	2167.66		36851	0.6226	15704	2737			0.79	No, Vu<V
SLV 3	11.35	-1012	1407	-727.51		0	0	8333	0			0	No, Vu<V
SLV 15	9.45	-1061	-5002	-2804.86		0	0	8333	0			0	No, Vu<V
SLV 15	11.35	-4731	-1581	1399.04		22597	0.7478	12853	2691			1.7	Si
SLV 10	9.45	-4217	-3589	-2164.05		157852	0.0954	16250	434			0.12	No, Vu<V
SLV 10	11.35	-7922	-1987	1040.6		25957	1.0899	13525	4127			2.08	Si
SLV 13	9.45	-1651	-5720	-3312.36		0	0	8333	0			0	No, Vu<V
SLV 13	11.35	-6805	-2251	1577.12		25865	0.9396	13506	3553			1.58	Si
SLV 4	9.45	-6424	3482	2167.66		36851	0.6226	15704	2737			0.79	No, Vu<V
SLV 4	11.35	-1012	1407	-727.51		0	0	8333	0			0	No, Vu<V
SLV 9	9.45	-4217	-3589	-2164.05		157852	0.0954	16250	434			0.12	No, Vu<V
SLV 9	11.35	-7922	-1987	1040.6		25957	1.0899	13525	4127			2.08	Si
SLV 14	9.45	-1651	-5720	-3312.36		0	0	8333	0			0	No, Vu<V
SLV 14	11.35	-6805	-2251	1577.12		25865	0.9396	13506	3553			1.58	Si
SLV 8	9.45	-3858	1351	1019.35		16360	0.8422	11605	2737			2.03	Si
SLV 8	11.35	105	1142	-190.98		0	0	8333	0			0	No, Vu<V
SLV 16	9.45	-1061	-5002	-2804.86		0	0	8333	0			0	No, Vu<V
SLV 16	11.35	-4731	-1581	1399.04		22597	0.7478	12853	2691			1.7	Si

Verifica a pressoflessione fuori piano D.M. 17-01-18 (N.T.C.)

quota 10.3 Wa 0.05 denominatore 8 γM = 2

Comb.	fd	Sa	σ0	N	M	Mc	Coeff.s.	Verifica
SLV 15	143750	0.46	0	-519	131.7	0	0	No, e>t/2
SLV 16	143750	0.46	0	-519	131.7	0	0	No, e>t/2
SLV 13	143750	0.46	3863	-1179	131.7	159.84	1.21	Si
SLV 14	143750	0.46	3863	-1179	131.7	159.84	1.21	Si
SLV 11	143750	0.46	5460	-1666	131.7	222.85	1.69	Si
SLV 12	143750	0.46	5460	-1666	131.7	222.85	1.69	Si
SLV 7	143750	0.46	10847	-3310	131.7	422.31	3.21	Si
SLV 8	143750	0.46	10847	-3310	131.7	422.31	3.21	Si
SLV 10	143750	0.46	12673	-3868	131.7	485.31	3.68	Si
SLV 9	143750	0.46	12673	-3868	131.7	485.31	3.68	Si

Verifica dei meccanismi locali di collasso con analisi cinematica lineare

forza di aggancio al piano = 0 quota mezzeria = 10.3 Wa = 0.05 Ta = 0.0731

Comb.	N top	N base	V orto	α0	M*	e*	a0*	aLim	Verifica
SLV 7	120	-2027	-97	0	0	0	0	9.02602	No, Trazione
SLV 12	-558	-2943	-166	0	226.6	0.896	0	9.02602	No
SLV 8	120	-2027	-97	0	0	0	0	9.02602	No, Trazione
SLV 11	-558	-2943	-166	0	226.6	0.896	0	9.02602	No
SLV 1	-2681	-4190	150	0.009	427.7	0.911	0.15003	10.21601	No
SLV 2	-2681	-4190	150	0.009	427.7	0.911	0.15003	10.21601	No
SLV 16	-3283	-5751	-157	0.012	487.9	0.919	0.19032	10.21601	No
SLV 15	-3283	-5751	-157	0.012	487.9	0.919	0.19032	10.21601	No
SLV 4	-1023	-2699	73	0.022	266.9	0.889	0.36755	10.21601	No
SLV 3	-1023	-2699	73	0.022	266.9	0.889	0.36755	10.21601	No

Tabella dei coefficienti di sicurezza minimi

Stato limite	Coeff.s.	Comb.	Verifica
PF_SLU	2.708	SLU 31	Si
V_SLU	1.434	SLU 82	Si
PF_SLV	0	SLV 8	No
V_SLV	0	SLV 3	No
PFFP_SLV	0	SLV 15	No
R_SLV	0	SLV 8	No

Maschio 169

Verifiche condotte secondo D.M. 17-01-18 (N.T.C.)

Dati geometrici

X ini.	Y ini.	X fin.	Y fin.	Quota i.	Quota.s	l	Sp.	h netta	h ini.	h fin.	a	a.s.,sx	a.s.,dx
-18.448	-3.183	-18.448	1.141	L5	L6	4.324	0.14	3.5	3.5	3.5			

Caratteristiche del materiale

(Circolare 7 21-01-19 C8.5.I) Muratura in mattoni pieni e malta di calce LC2_Corti

fb	fk	fvk0	fmedio	τ0	fv0	μ	ϕ	fv,lim	E	G	FC
600000			345000	9000	20000	0.58	0.77	32500	320000000	128000000	1.2

Verifica a pressoflessione nel piano secondo D.M. 17-01-18 NTC §7.8.2.2.1 in combinazioni non sismiche, γM = 3

Comb.	Quota	N	M	σ0	Mu	c.s.	Verifica
SLU 72	8.55	-14298	1785	23618	21949.09	12.296	Si
SLU 72	12.05	-7715	2204.3	12744	14070.17	6.383	Si
SLU 28	8.55	-12165	1594.18	20096	19813.13	12.428	Si
SLU 28	12.05	-6676	1963.6	11027	12479.08	6.355	Si
SLU 49	8.55	-13274	1644.44	21928	20973.83	12.754	Si
SLU 49	12.05	-7363	2130.11	12163	13542.41	6.358	Si
SLU 17	8.55	-11796	1475.41	19486	19402.52	13.151	Si
SLU 17	12.05	-6257	1799.66	10337	11811.96	6.563	Si
SLU 9	8.55	-10536	1420.84	17405	17912.38	12.607	Si
SLU 9	12.05	-5782	1841.32	9552	11035.88	5.993	Si
SLU 51	8.55	-12971	1628.05	21427	20667.4	12.695	Si
SLU 51	12.05	-7092	2106.06	11716	13128.6	6.234	Si
SLU 5	8.55	-10232	1207.41	16902	17531.73	14.52	Si
SLU 5	12.05	-5481	1659.66	9054	10532.92	6.346	Si
SLU 30	8.55	-11862	1577.79	19595	19477.25	12.345	Si
SLU 30	12.05	-6405	1939.56	10580	12048.94	6.212	Si
SLU 70	8.55	-14601	1801.39	24118	22220.28	12.335	Si
SLU 70	12.05	-7986	2228.35	13191	14469.2	6.493	Si
SLU 7	8.55	-10839	1437.23	17905	18283.5	12.721	Si
SLU 7	12.05	-6053	1865.37	9999	11480.79	6.155	Si

Verifica a pressoflessione nel piano secondo D.M. 17-01-18 NTC §7.8.2.2.1 in combinazioni sismiche, γM = 2

Comb.	Quota	N	M	σ0	Mu	c.s.	Verifica
SLV 14	8.55	-8137	876.38	13441	15656.61	17.865	Si
SLV 14	12.05	-3699	2109.63	6111	7597.92	3.602	Si
SLV 9	8.55	-11598	-474.97	19159	21144.13	44.516	Si
SLV 9	12.05	-5334	2827.85	8812	10701.52	3.784	Si
SLV 11	8.55	-7428	2578.32	12271	14447.57	5.603	Si
SLV 11	12.05	-4344	-441	7176	8839.97	20.045	Si
SLV 12	8.55	-7428	2578.32	12271	14447.57	5.603	Si
SLV 12	12.05	-4344	-441	7176	8839.97	20.045	Si
SLV 6	8.55	-13315	-717.29	21994	23604.9	32.908	Si
SLV 6	12.05	-6439	2462.82	10636	12709.25	5.16	Si
SLV 5	8.55	-13315	-717.29	21994	23604.9	32.908	Si
SLV 5	12.05	-6439	2462.82	10636	12709.25	5.16	Si
SLV 13	8.55	-8137	876.38	13441	15656.61	17.865	Si
SLV 13	12.05	-3699	2109.63	6111	7597.92	3.602	Si
SLV 15	8.55	-6886	1792.37	11374	13501.21	7.533	Si
SLV 15	12.05	-3402	1128.97	5620	7017.06	6.215	Si
SLV 16	8.55	-6886	1792.37	11374	13501.21	7.533	Si
SLV 16	12.05	-3402	1128.97	5620	7017.06	6.215	Si
SLV 10	8.55	-11598	-474.97	19159	21144.13	44.516	Si
SLV 10	12.05	-5334	2827.85	8812	10701.52	3.784	Si

Verifica a taglio nel piano secondo D.M. 17-01-18 (N.T.C.) §7.8.2.2.2 con rottura per scorrimento in combinazioni non sismiche, γM = 3

Comb.	Quota	N	V par	M	σ0	σN	l'	fvd	Vt scorr.	Vt fess.diag.	Vt,lim	c.s.	Verifica
SLU 47	8.55	-12667	-1143	1414.62		20925	4.324	8346	5052			4.42	Si
SLU 47	12.05	-6791	-473	1924.4		11218	4.324	7051	4269			9.03	Si
SLU 34	8.55	-12818	-1175	1418.94		21174	4.324	8379	5072			4.32	Si
SLU 34	12.05	-6578	-488	1716.24		10867	4.324	7004	4240			8.69	Si
SLU 5	8.55	-10232	-1128	1207.41		16902	4.324	7809	4727			4.19	Si
SLU 5	12.05	-5481	-469	1659.66		9054	4.324	6763	4094			8.72	Si
SLU 23	8.55	-11170	-1130	1115.53		18451	4.324	8016	4852			4.3	Si
SLU 23	12.05	-5773	-460	1438.16		9536	4.324	6827	4133			8.99	Si
SLU 13	8.55	-11492	-1144	1261.99		18983	4.324	8087	4895			4.28	Si
SLU 13	12.05	-5956	-471	1618		9839	4.324	6867	4157			8.82	Si
SLU 10	8.55	-11103	-1115	1013.16		18341	4.324	8001	4844			4.35	Si
SLU 10	12.05	-5625	-445	1298.26		9293	4.324	6795	4113			9.25	Si
SLU 26	8.55	-11558	-1159	1364.36		19093	4.324	8101	4904			4.23	Si
SLU 26	12.05	-6103	-486	1757.9		10082	4.324	6900	4177			8.59	Si
SLU 68	8.55	-13993	-1174	1571.57		23116	4.324	8638	5229			4.45	Si
SLU 68	12.05	-7413	-490	2022.64		12246	4.324	7188	4352			8.89	Si
SLU 31	8.55	-12429	-1146	1170.11		20532	4.324	8293	5020			4.38	Si
SLU 31	12.05	-6248	-461	1396.5		10321	4.324	6932	4196			9.09	Si
SLU 2	8.55	-9844	-1099	958.58		16261	4.324	7724	4676			4.26	Si
SLU 2	12.05	-5150	-443	1339.93		8508	4.324	6690	4050			9.14	Si

Verifica a taglio nel piano secondo D.M. 17-01-18 (N.T.C.) §7.8.2.2.2 con rottura per scorrimento in combinazioni sismiche, γM = 2

Comb.	Quota	N	V par	M	σ0	σN	l'	fvd	Vt scorr.	Vt fess.diag.	Vt,lim	c.s.	Verifica
SLV 12	8.55	-7428	8851	2578.32		12271	4.324	10788	6530			0.74	No, Vu<V
SLV 12	12.05	-4344	6647	-441		7176	4.324	9768	5913			0.89	No, Vu<V
SLV 7	8.55	-9145	8366	2336		15106	4.324	11355	6874			0.82	No, Vu<V
SLV 7	12.05	-5448	5752	-806.04		9000	4.324	10133	6134			1.07	Si
SLV 8	8.55	-9145	8366	2336		15106	4.324	11355	6874			0.82	No, Vu<V

Comb.	Quota	N	V par	M	σ0	σN	l'	fvd	Vt scorr.	Vt fess.diag.	Vt,lim	c.s.	Verifica
SLV 8	12.05	-5448	5752	-806.04		9000	4.324	10133	6134			1.07	Si
SLV 6	8.55	-13315	-9053	-717.29		21994	4.324	12732	7708			0.85	No, Vu<V
SLV 6	12.05	-6439	-6718	2462.82		10636	4.324	10461	6333			0.94	No, Vu<V
SLV 15	8.55	-6886	3321	1792.37		11374	4.324	10608	6422			1.93	Si
SLV 15	12.05	-3402	3326	1128.97		5620	4.324	9457	5725			1.72	Si
SLV 11	8.55	-7428	8851	2578.32		12271	4.324	10788	6530			0.74	No, Vu<V
SLV 11	12.05	-4344	6647	-441		7176	4.324	9768	5913			0.89	No, Vu<V
SLV 9	8.55	-11598	-8567	-474.97		19159	4.324	12165	7364			0.86	No, Vu<V
SLV 9	12.05	-5334	-5824	2827.85		8812	4.324	10096	6112			1.05	Si
SLV 10	8.55	-11598	-8567	-474.97		19159	4.324	12165	7364			0.86	No, Vu<V
SLV 10	12.05	-5334	-5824	2827.85		8812	4.324	10096	6112			1.05	Si
SLV 5	8.55	-13315	-9053	-717.29		21994	4.324	12732	7708			0.85	No, Vu<V
SLV 5	12.05	-6439	-6718	2462.82		10636	4.324	10461	6333			0.94	No, Vu<V
SLV 16	8.55	-6886	3321	1792.37		11374	4.324	10608	6422			1.93	Si
SLV 16	12.05	-3402	3326	1128.97		5620	4.324	9457	5725			1.72	Si

Verifica a pressoflessione fuori piano D.M. 17-01-18 (N.T.C.)

quota 10.3 Wa 0.03 denominatore 8 γM = 2

Comb.	fd	Sa	σ0	N	M	Mc	Coeff.s.	Verifica
SLV 15	143750	0.46	8294	-5021	279.47	327.6	1.17	Si
SLV 16	143750	0.46	8294	-5021	279.47	327.6	1.17	Si
SLV 14	143750	0.46	9676	-5858	279.47	377.56	1.35	Si
SLV 13	143750	0.46	9676	-5858	279.47	377.56	1.35	Si
SLV 12	143750	0.46	10013	-6062	279.47	389.54	1.39	Si
SLV 11	143750	0.46	10013	-6062	279.47	389.54	1.39	Si
SLV 8	143750	0.46	12869	-7791	279.47	487.9	1.75	Si
SLV 7	143750	0.46	12869	-7791	279.47	487.9	1.75	Si
SLV 9	143750	0.46	14621	-8851	279.47	545.44	1.95	Si
SLV 10	143750	0.46	14621	-8851	279.47	545.44	1.95	Si

Verifica dei meccanismi locali di collasso con analisi cinematica lineare

forza di aggancio al piano = 0 quota mezzeria = 10.3 Wa = 0.03 Ta = 0.1461

Comb.	N top	N base	V orto	α0	M*	e*	a0*	aLim	Verifica
SLV 4	-7083	-12606	18	0.022	1025.2	0.923	0.34981	18.99716	No
SLV 3	-7083	-12606	18	0.022	1025.2	0.923	0.34981	18.99716	No
SLV 1	-7381	-13857	10	0.023	1055.1	0.925	0.36219	18.99716	No
SLV 2	-7381	-13857	10	0.023	1055.1	0.925	0.36219	18.99716	No
SLV 8	-5448	-9145	18	0.023	861.4	0.912	0.36178	18.80115	No
SLV 7	-5448	-9145	18	0.023	861.4	0.912	0.36178	18.80115	No
SLV 9	-5334	-11598	-18	0.023	850.1	0.912	0.36312	18.80115	No
SLV 10	-5334	-11598	-18	0.023	850.1	0.912	0.36312	18.80115	No
SLV 6	-6439	-13315	-10	0.023	960.5	0.919	0.37028	18.80115	No
SLV 5	-6439	-13315	-10	0.023	960.5	0.919	0.37028	18.80115	No

Tabella dei coefficienti di sicurezza minimi

Stato limite	Coeff.s.	Comb.	Verifica
PF_SLU	5.993	SLU 9	Si
V_SLU	4.193	SLU 5	Si
PF_SLV	3.602	SLV 13	Si
V_SLV	0.738	SLV 11	No
PFFP_SLV	1.172	SLV 15	Si
R_SLV	0.018	SLV 3	No

Maschio 170

Verifiche condotte secondo D.M. 17-01-18 (N.T.C.)

Dati geometrici

X ini.	Y ini.	X fin.	Y fin.	Quota i.	Quota.s	l	Sp.	h netta	h ini.	h fin.	a	a.s.,sx	a.s.,dx
-16.968	-4.546	-16.968	-4.413	L5	L6	0.133	0.28	3.5	3.5	3.5			

Caratteristiche del materiale

(Circolare 7 21-01-19 C8.5.I) Muratura in mattoni pieni e malta di calce LC2_Corti

fb	fk	fvk0	fmedio	τ0	fv0	μ	ϕ	fv,lim	E	G	FC
600000			345000	9000	20000	0.58	0.77	32500	320000000	128000000	1.2

Verifica a pressoflessione nel piano secondo D.M. 17-01-18 NTC §7.8.2.2.1 in combinazioni non sismiche, γM = 3

Comb.	Quota	N	M	σ0	Mu	c.s.	Verifica
SLU 34	8.55	-155	-47.92	0	0	0	No, e>l/2
SLU 34	11.66	-504	76.46	0	0	0	No, e>l/2
SLU 42	8.55	-452	-35.22	0	0	0	No, e>l/2
SLU 42	11.66	-542	54.89	0	0	0	No, e>l/2
SLU 40	8.55	-360	-37.2	0	0	0	No, e>l/2
SLU 40	11.66	-499	57.39	0	0	0	No, e>l/2
SLU 46	8.55	-520	-34	13932	28.71	0.844	No, M>Mu
SLU 46	11.66	-577	48.49	0	0	0	No, e>l/2
SLU 44	8.55	-165	-48.75	0	0	0	No, e>l/2
SLU 44	11.66	-512	73.36	0	0	0	No, e>l/2
SLU 36	8.55	-510	-33.17	13660	28.26	0.852	No, M>Mu
SLU 36	11.66	-570	51.6	0	0	0	No, e>l/2
SLU 47	8.55	-256	-46.77	0	0	0	No, e>l/2
SLU 47	11.66	-554	70.86	0	0	0	No, e>l/2
SLU 49	8.55	-611	-32.02	16374	32.52	1.016	Si
SLU 49	11.66	-620	45.99	0	0	0	No, e>l/2
SLU 38	8.55	-529	-32.2	14170	29.1	0.904	No, M>Mu
SLU 38	11.66	-572	50.37	0	0	0	No, e>l/2

Comb.	Quota	N	M	σ0	Mu	c.s.	Verifica
SLU 51	8.55	-630	-31.05	16885	33.27	1.072	Si
SLU 51	11.66	-622	44.76	0	0	0	No, e>l/2

Verifica a pressoflessione nel piano secondo D.M. 17-01-18 NTC §7.8.2.2.1 in combinazioni sismiche, γM = 2

Comb.	Quota	N	M	σ0	Mu	c.s.	Verifica
SLV 1	8.55	-4698	144.93	125924	0	0	No, Rottura per schiacciamento
SLV 1	11.66	-527	-264.84	0	0	0	No, e>l/2
SLV 11	8.55	6280	-239.9	0	0	0	No, Trazione
SLV 11	11.66	-309	510.7	0	0	0	No, e>l/2
SLV 7	8.55	5032	-180.96	0	0	0	No, Trazione
SLV 7	11.66	-313	424.9	0	0	0	No, e>l/2
SLV 5	8.55	-7698	214.61	206310	0	0	No, Rottura per schiacciamento
SLV 5	11.66	-636	-482.25	0	0	0	No, e>l/2
SLV 8	8.55	5032	-180.96	0	0	0	No, Trazione
SLV 8	11.66	-313	424.9	0	0	0	No, e>l/2
SLV 10	8.55	-6450	155.66	172862	0	0	No, Rottura per schiacciamento
SLV 10	11.66	-632	-396.45	0	0	0	No, e>l/2
SLV 12	8.55	6280	-239.9	0	0	0	No, Trazione
SLV 12	11.66	-309	510.7	0	0	0	No, e>l/2
SLV 6	8.55	-7698	214.61	206310	0	0	No, Rottura per schiacciamento
SLV 6	11.66	-636	-482.25	0	0	0	No, e>l/2
SLV 2	8.55	-4698	144.93	125924	0	0	No, Rottura per schiacciamento
SLV 2	11.66	-527	-264.84	0	0	0	No, e>l/2
SLV 9	8.55	-6450	155.66	172862	0	0	No, Rottura per schiacciamento
SLV 9	11.66	-632	-396.45	0	0	0	No, e>l/2

Verifica a taglio nel piano secondo D.M. 17-01-18 (N.T.C.) §7.8.2.2.2 con rottura per scorrimento in combinazioni non sismiche, γM = 3

Comb.	Quota	N	V par	M	σ0	σN	I'	fvd	Vt scorr.	Vt fess.diag.	Vt,lim	c.s.	Verifica
SLU 40	8.55	-360	-110	-37.2		0	0	5556	0			0	No, Vu<V
SLU 40	11.66	-499	581	57.39		0	0	5556	0			0	No, Vu<V
SLU 34	8.55	-155	-142	-47.92		0	0	5556	0			0	No, Vu<V
SLU 34	11.66	-504	772	76.46		0	0	5556	0			0	No, Vu<V
SLU 42	8.55	-452	-105	-35.22		0	0	5556	0			0	No, Vu<V
SLU 42	11.66	-542	561	54.89		0	0	5556	0			0	No, Vu<V
SLU 38	8.55	-529	-97	-32.2		109841	0.0172	10833	52			0.54	No, Vu<V
SLU 38	11.66	-572	521	50.37		0	0	5556	0			0	No, Vu<V
SLU 49	8.55	-611	-98	-32.02		51154	0.0427	10833	129			1.32	Si
SLU 49	11.66	-620	482	45.99		0	0	5556	0			0	No, Vu<V
SLU 51	8.55	-630	-95	-31.05		43230	0.052	10833	158			1.66	Si
SLU 51	11.66	-622	471	44.76		0	0	5556	0			0	No, Vu<V
SLU 46	8.55	-520	-103	-34		506341	0.0037	10833	11			0.11	No, Vu<V
SLU 46	11.66	-577	502	48.49		0	0	5556	0			0	No, Vu<V
SLU 36	8.55	-510	-100	-33.17		393299	0.0046	10833	14			0.14	No, Vu<V
SLU 36	11.66	-570	532	51.6		0	0	5556	0			0	No, Vu<V
SLU 44	8.55	-165	-145	-48.75		0	0	5556	0			0	No, Vu<V
SLU 44	11.66	-512	742	73.36		0	0	5556	0			0	No, Vu<V
SLU 47	8.55	-256	-140	-46.77		0	0	5556	0			0	No, Vu<V
SLU 47	11.66	-554	722	70.86		0	0	5556	0			0	No, Vu<V

Verifica a taglio nel piano secondo D.M. 17-01-18 (N.T.C.) §7.8.2.2.2 con rottura per scorrimento in combinazioni sismiche, γM = 2

Comb.	Quota	N	V par	M	σ0	σN	I'	fvd	Vt scorr.	Vt fess.diag.	Vt,lim	c.s.	Verifica
SLV 5	8.55	-7698	-946	214.61		236496	0.1162	16250	529			0.56	No, Vu<V
SLV 5	11.66	-636	-4704	-482.25		0	0	8333	0			0	No, Vu<V
SLV 12	8.55	6280	866	-239.9		0	0	8333	0			0	No, Vu<V
SLV 12	11.66	-309	5022	510.7		0	0	8333	0			0	No, Vu<V
SLV 10	8.55	-6450	-1137	155.66		180692	0.1275	16250	580			0.51	No, Vu<V
SLV 10	11.66	-632	-3822	-396.45		0	0	8333	0			0	No, Vu<V
SLV 2	8.55	-4698	-23	144.93		156319	0.1073	16250	488			21.46	Si
SLV 2	11.66	-527	-2636	-264.84		0	0	8333	0			0	No, Vu<V
SLV 11	8.55	6280	866	-239.9		0	0	8333	0			0	No, Vu<V
SLV 11	11.66	-309	5022	510.7		0	0	8333	0			0	No, Vu<V
SLV 8	8.55	5032	1057	-180.96		0	0	8333	0			0	No, Vu<V
SLV 8	11.66	-313	4141	424.9		0	0	8333	0			0	No, Vu<V
SLV 9	8.55	-6450	-1137	155.66		180692	0.1275	16250	580			0.51	No, Vu<V
SLV 9	11.66	-632	-3822	-396.45		0	0	8333	0			0	No, Vu<V
SLV 7	8.55	5032	1057	-180.96		0	0	8333	0			0	No, Vu<V
SLV 7	11.66	-313	4141	424.9		0	0	8333	0			0	No, Vu<V
SLV 6	8.55	-7698	-946	214.61		236496	0.1162	16250	529			0.56	No, Vu<V
SLV 6	11.66	-636	-4704	-482.25		0	0	8333	0			0	No, Vu<V
SLV 1	8.55	-4698	-23	144.93		156319	0.1073	16250	488			21.46	Si
SLV 1	11.66	-527	-2636	-264.84		0	0	8333	0			0	No, Vu<V

Verifica a pressoflessione fuori piano D.M. 17-01-18 (N.T.C.)

quota 10.3 Wa 0.05 denominatore 8 γM = 2

Comb.	fd	Sa	σ0	N	M	Mc	Coeff.s.	Verifica
SLV 11	143750	0.46	0	169	15.73	0	0	No, Trazione
SLV 7	143750	0.46	0	235	15.73	0	0	No, Trazione
SLV 12	143750	0.46	0	169	15.73	0	0	No, Trazione
SLV 8	143750	0.46	0	235	15.73	0	0	No, Trazione
SLV 4	143750	0.46	11498	-429	15.73	54.41	3.46	Si
SLV 3	143750	0.46	11498	-429	15.73	54.41	3.46	Si
SLV 16	143750	0.46	17310	-646	15.73	77.61	4.93	Si
SLV 15	143750	0.46	17310	-646	15.73	77.61	4.93	Si
SLV 1	143750	0.46	28484	-1063	15.73	114.11	7.26	Si

Comb.	fd	Sa	σ0	N	M	Mc	Coeff.s.	Verifica
SLV 2	143750	0.46	28484	-1063	15.73	114.11	7.26	Si

Verifica dei meccanismi locali di collasso con analisi cinematica lineare

forza di aggancio al piano = 0 quota mezzeria = 10.3 Wa = 0.05 Ta = 0.0731

Comb.	N top	N base	V orto	α0	M*	e*	a0*	aLim	Verifica
SLV 8	-236	5032	6	0	0	0	0	9.02602	No, Trazione
SLV 15	-361	3281	3	0	0	0	0	10.21601	No, Trazione
SLV 16	-361	3281	3	0	0	0	0	10.21601	No, Trazione
SLV 7	-236	5032	6	0	0	0	0	9.02602	No, Trazione
SLV 12	-228	6280	6	0	0	0	0	9.02602	No, Trazione
SLV 11	-228	6280	6	0	0	0	0	9.02602	No, Trazione
SLV 6	-641	-7698	-6	0.038	83.8	0.939	0.59168	9.02602	No
SLV 5	-641	-7698	-6	0.038	83.8	0.939	0.59168	9.02602	No
SLV 1	-508	-4698	-3	0.043	70.4	0.929	0.67963	10.21601	No
SLV 2	-508	-4698	-3	0.043	70.4	0.929	0.67963	10.21601	No

Tabella dei coefficienti di sicurezza minimi

Stato limite	Coeff.s.	Comb.	Verifica
PF_SLU	0	SLU 2	No
V_SLU	0	SLU 2	No
PF_SLV	0	SLV 16	No
V_SLV	0	SLV 1	No
PFFP_SLV	0	SLV 12	No
R_SLV	0	SLV 16	No

Maschio 171

Verifiche condotte secondo D.M. 17-01-18 (N.T.C.)

Dati geometrici

X ini.	Y ini.	X fin.	Y fin.	Quota i.	Quota.s	l	Sp.	h netta	h ini.	h fin.	a	a.s.,sx	a.s.,dx
-13.727	-3.183	-15.287	-3.183	L5	L6	1.56	0.28	3.5	3.5	3.5			

Caratteristiche del materiale

(Circolare 7 21-01-19 C8.5.I) Muratura in mattoni pieni e malta di calce LC2_Corti

fb	fk	fvk0	fmedio	τ0	fv0	μ	ϕ	fv,lim	E	G	FC
600000			345000	9000	20000	0.58	0.77	32500	320000000	128000000	1.2

Verifica a pressoflessione nel piano secondo D.M. 17-01-18 NTC §7.8.2.2.1 in combinazioni non sismiche, γM = 3

Comb.	Quota	N	M	σ0	Mu	c.s.	Verifica
SLU 83	8.55	-9375	-1879.3	21459	5386.94	2.866	Si
SLU 83	10.65	-11337	2156.92	25949	6026.7	2.794	Si
SLU 41	8.55	-7536	-1676.06	17250	4634.07	2.765	Si
SLU 41	10.65	-9573	1898.12	21912	5459.18	2.876	Si
SLU 81	8.55	-9156	-1891.55	20957	5304.96	2.805	Si
SLU 81	10.65	-11197	2175.41	25629	5986.67	2.752	Si
SLU 74	8.55	-9369	-1784.42	21445	5384.78	3.018	Si
SLU 74	10.65	-11124	2062.09	25463	5965.59	2.893	Si
SLU 84	8.55	-9288	-1878.75	21260	5354.76	2.85	Si
SLU 84	10.65	-11239	2118.55	25727	5998.94	2.832	Si
SLU 31	8.55	-7044	-1565.52	16123	4407.39	2.815	Si
SLU 31	10.65	-8841	1708.91	20238	5183.82	3.033	Si
SLU 39	8.55	-7317	-1688.31	16748	4534.4	2.686	Si
SLU 39	10.65	-9433	1916.62	21592	5408.34	2.822	Si
SLU 40	8.55	-7230	-1687.75	16549	4494.39	2.663	Si
SLU 40	10.65	-9336	1878.25	21369	5372.46	2.86	Si
SLU 82	8.55	-9069	-1890.99	20758	5271.94	2.788	Si
SLU 82	10.65	-11099	2137.04	25407	5958.31	2.788	Si
SLU 42	8.55	-7449	-1675.5	17051	4594.89	2.742	Si
SLU 42	10.65	-9476	1859.75	21689	5423.89	2.916	Si

Verifica a pressoflessione nel piano secondo D.M. 17-01-18 NTC §7.8.2.2.1 in combinazioni sismiche, γM = 2

Comb.	Quota	N	M	σ0	Mu	c.s.	Verifica
SLV 3	8.55	-8722	1680.45	19965	5692.7	3.388	Si
SLV 3	10.65	-3851	-1212.25	8815	2787.7	2.3	Si
SLV 12	8.55	-4189	-1373.15	9589	3011.51	2.193	Si
SLV 12	10.65	-5444	1358.3	12460	3813.65	2.808	Si
SLV 9	8.55	-7734	-2549.92	17703	5159.29	2.023	Si
SLV 9	10.65	-11417	2733.6	26134	7001.97	2.561	Si
SLV 10	8.55	-7734	-2549.92	17703	5159.29	2.023	Si
SLV 10	10.65	-11417	2733.6	26134	7001.97	2.561	Si
SLV 14	8.55	-4720	-4004.07	0	0	0	No, e>l/2
SLV 14	10.65	-11310	3895.58	25888	6953.78	1.785	Si
SLV 11	8.55	-4189	-1373.15	9589	3011.51	2.193	Si
SLV 11	10.65	-5444	1358.3	12460	3813.65	2.808	Si
SLV 13	8.55	-4720	-4004.07	0	0	0	No, e>l/2
SLV 13	10.65	-11310	3895.58	25888	6953.78	1.785	Si
SLV 4	8.55	-8722	1680.45	19965	5692.7	3.388	Si
SLV 4	10.65	-3851	-1212.25	8815	2787.7	2.3	Si
SLV 15	8.55	-3657	-3651.04	0	0	0	No, e>l/2
SLV 15	10.65	-9518	3482.99	21786	6101.17	1.752	Si
SLV 16	8.55	-3657	-3651.04	0	0	0	No, e>l/2
SLV 16	10.65	-9518	3482.99	21786	6101.17	1.752	Si

Verifica a taglio nel piano secondo D.M. 17-01-18 (N.T.C.) §7.8.2.2.2 con rottura per scorrimento in combinazioni non sismiche, γM = 3

Comb.	Quota	N	V par	M	σ0	σN	l'	fvd	Vt scorr.	Vt fess.diag.	Vt,lim	c.s.	Verifica

Comb.	Quota	N	V par	M	σ0	σN	l'	fvd	Vt scorr.	Vt fess.diag.	Vt,lim	c.s.	Verifica
SLU 74	8.55	-9369	-3054	-1784.42		21445	1.5603	8415	3676			1.2	Si
SLU 74	10.65	-11124	-3090	2062.09		25463	1.5603	8951	3910			1.27	Si
SLU 40	8.55	-7230	-2836	-1687.75		16549	1.5603	7762	3391			1.2	Si
SLU 40	10.65	-9336	-2895	1878.25		21369	1.5603	8405	3672			1.27	Si
SLU 39	8.55	-7317	-2857	-1688.31		16748	1.5603	7789	3403			1.19	Si
SLU 39	10.65	-9433	-2902	1916.62		21592	1.5603	8434	3685			1.27	Si
SLU 73	8.55	-8883	-2989	-1768.77		20332	1.5603	8267	3611			1.21	Si
SLU 73	10.65	-10605	-3057	1967.7		24275	1.5603	8792	3841			1.26	Si
SLU 41	8.55	-7536	-2816	-1676.06		17250	1.5603	7856	3432			1.22	Si
SLU 41	10.65	-9573	-2847	1898.12		21912	1.5603	8477	3703			1.3	Si
SLU 81	8.55	-9156	-3216	-1891.55		20957	1.5603	8350	3648			1.13	Si
SLU 81	10.65	-11197	-3265	2175.41		25629	1.5603	8973	3920			1.2	Si
SLU 82	8.55	-9069	-3195	-1890.99		20758	1.5603	8323	3636			1.14	Si
SLU 82	10.65	-11099	-3258	2137.04		25407	1.5603	8943	3907			1.2	Si
SLU 83	8.55	-9375	-3175	-1879.3		21459	1.5603	8417	3677			1.16	Si
SLU 83	10.65	-11337	-3211	2156.92		25949	1.5603	9015	3939			1.23	Si
SLU 84	8.55	-9288	-3153	-1878.75		21260	1.5603	8390	3665			1.16	Si
SLU 84	10.65	-11239	-3203	2118.55		25727	1.5603	8986	3926			1.23	Si
SLU 75	8.55	-9282	-3032	-1783.86		21247	1.5603	8388	3665			1.21	Si
SLU 75	10.65	-11027	-3083	2023.72		25241	1.5603	8921	3897			1.26	Si

Verifica a taglio nel piano secondo D.M. 17-01-18 (N.T.C.) §7.8.2.2.2 con rottura per scorrimento in combinazioni sismiche, γM = 2

Comb.	Quota	N	V par	M	σ0	σN	l'	fvd	Vt scorr.	Vt fess.diag.	Vt,lim	c.s.	Verifica
SLV 15	8.55	-3657	-6676	-3651.04		0	0	8333	0			0	No, Vu<V
SLV 15	10.65	-9518	-4943	3482.99		27356	1.2425	13805	4803			0.97	No, Vu<V
SLV 6	8.55	-9254	-1273	-950.48		21181	1.5603	12570	5491			4.31	Si
SLV 6	10.65	-9717	-3243	1325.02		22243	1.5603	12782	5584			1.72	Si
SLV 5	8.55	-9254	-1273	-950.48		21181	1.5603	12570	5491			4.31	Si
SLV 5	10.65	-9717	-3243	1325.02		22243	1.5603	12782	5584			1.72	Si
SLV 11	8.55	-4189	-2741	-1373.15		11025	1.357	10538	4004			1.46	Si
SLV 11	10.65	-5444	-823	1358.3		12460	1.5603	10825	4729			5.75	Si
SLV 10	8.55	-7734	-4206	-2549.92		20441	1.3513	12421	4700			1.12	Si
SLV 10	10.65	-11417	-5401	2733.6		26134	1.5603	13560	5924			1.1	Si
SLV 16	8.55	-3657	-6676	-3651.04		0	0	8333	0			0	No, Vu<V
SLV 16	10.65	-9518	-4943	3482.99		27356	1.2425	13805	4803			0.97	No, Vu<V
SLV 13	8.55	-4720	-7116	-4004.07		0	0	8333	0			0	No, Vu<V
SLV 13	10.65	-11310	-6316	3895.58		30903	1.3071	14514	5312			0.84	No, Vu<V
SLV 12	8.55	-4189	-2741	-1373.15		11025	1.357	10538	4004			1.46	Si
SLV 12	10.65	-5444	-823	1358.3		12460	1.5603	10825	4729			5.75	Si
SLV 9	8.55	-7734	-4206	-2549.92		20441	1.3513	12421	4700			1.12	Si
SLV 9	10.65	-11417	-5401	2733.6		26134	1.5603	13560	5924			1.1	Si
SLV 14	8.55	-4720	-7116	-4004.07		0	0	8333	0			0	No, Vu<V
SLV 14	10.65	-11310	-6316	3895.58		30903	1.3071	14514	5312			0.84	No, Vu<V

Verifica a pressoflessione fuori piano D.M. 17-01-18 (N.T.C.)

quota 10.3 Wa 0.05 denominatore 8 γM = 2

Comb.	fd	Sa	σ0	N	M	Mc	Coeff.s.	Verifica
SLV 7	143750	0.46	8853	-3867	188.53	502.22	2.66	Si
SLV 8	143750	0.46	8853	-3867	188.53	502.22	2.66	Si
SLV 4	143750	0.46	10123	-4422	188.53	567.83	3.01	Si
SLV 3	143750	0.46	10123	-4422	188.53	567.83	3.01	Si
SLV 11	143750	0.46	11937	-5215	188.53	658.76	3.49	Si
SLV 12	143750	0.46	11937	-5215	188.53	658.76	3.49	Si
SLV 2	143750	0.46	14296	-6245	188.53	772.06	4.1	Si
SLV 1	143750	0.46	14296	-6245	188.53	772.06	4.1	Si
SLV 16	143750	0.46	20404	-8914	188.53	1039.55	5.51	Si
SLV 15	143750	0.46	20404	-8914	188.53	1039.55	5.51	Si

Verifica dei meccanismi locali di collasso con analisi cinematica lineare

forza di aggancio al piano = 0 quota mezzeria = 10.3 Wa = 0.05 Ta = 0.0731

Comb.	N top	N base	V orto	α0	M*	e*	a0*	aLim	Verifica
SLV 12	-3362	-4189	-176	0.015	565	0.907	0.23356	9.02602	No
SLV 11	-3362	-4189	-176	0.015	565	0.907	0.23356	9.02602	No
SLV 6	-4379	-9254	176	0.019	666.4	0.917	0.30025	9.02602	No
SLV 5	-4379	-9254	176	0.019	666.4	0.917	0.30025	9.02602	No
SLV 7	-3686	-5709	-142	0.023	597.1	0.91	0.36306	9.02602	No
SLV 8	-3686	-5709	-142	0.023	597.1	0.91	0.36306	9.02602	No
SLV 9	-4056	-7734	143	0.024	634	0.914	0.37816	9.02602	No
SLV 10	-4056	-7734	143	0.024	634	0.914	0.37816	9.02602	No
SLV 16	-3227	-3657	-103	0.03	551.7	0.905	0.47646	10.21601	No
SLV 15	-3227	-3657	-103	0.03	551.7	0.905	0.47646	10.21601	No

Tabella dei coefficienti di sicurezza minimi

Stato limite	Coeff.s.	Comb.	Verifica
PF_SLU	2.663	SLU 40	Si
V_SLU	1.134	SLU 81	Si
PF_SLV	0	SLV 13	No
V_SLV	0	SLV 13	No
PFFP_SLV	2.664	SLV 7	Si
R_SLV	0.026	SLV 11	No

Maschio 172

Verifiche condotte secondo D.M. 17-01-18 (N.T.C.)

Dati geometrici

X ini.	Y ini.	X fin.	Y fin.	Quota i.	Quota.s	l	Sp.	h netta	h ini.	h fin.	a	a.s.,sx	a.s.,dx
-16.968	-4.696	-16.697	-4.696	L5	L6	0.271	0.3	3.5	3.5	3.5			

Caratteristiche del materiale

(Circolare 7 21-01-19 C8.5.I) Muratura in mattoni pieni e malta di calce LC2_Corti

fb	fk	fvk0	fmedio	τ0	fv0	μ	ϕ	fv,lim	E	G	FC
600000			345000	9000	20000	0.58	0.77	32500	320000000	128000000	1.2

Verifica a pressoflessione nel piano secondo D.M. 17-01-18 NTC §7.8.2.2.1 in combinazioni non sismiche, γM = 3

Comb.	Quota	N	M	σ0	Mu	c.s.	Verifica
SLU 70	8.55	-3828	40.14	47048	219.3	5.463	Si
SLU 70	11.66	-1611	-148.76	19793	165.34	1.111	Si
SLU 9	8.55	-3047	52.04	37453	223.26	4.29	Si
SLU 9	11.66	-1297	-127.61	15936	141.44	1.108	Si
SLU 5	8.55	-3351	55.25	41187	224.68	4.067	Si
SLU 5	11.66	-1277	-128.28	15700	139.85	1.09	Si
SLU 26	8.55	-3551	45.1	43643	223.56	4.957	Si
SLU 26	11.66	-1370	-132.23	16841	147.41	1.115	Si
SLU 72	8.55	-3828	44.05	47047	219.3	4.978	Si
SLU 72	11.66	-1629	-151.51	20015	166.59	1.099	Si
SLU 49	8.55	-3628	50.29	44592	222.69	4.428	Si
SLU 49	11.66	-1518	-144.81	18652	158.69	1.096	Si
SLU 7	8.55	-3047	48.13	37454	223.26	4.639	Si
SLU 7	11.66	-1279	-124.85	15715	139.95	1.121	Si
SLU 68	8.55	-4132	47.26	50781	211.02	4.465	Si
SLU 68	11.66	-1609	-152.18	19779	165.25	1.086	Si
SLU 51	8.55	-3628	54.2	44591	222.69	4.109	Si
SLU 51	11.66	-1536	-147.56	18874	160.01	1.084	Si
SLU 47	8.55	-3932	57.41	48325	216.89	3.778	Si
SLU 47	11.66	-1517	-148.23	18638	158.6	1.07	Si

Verifica a pressoflessione nel piano secondo D.M. 17-01-18 NTC §7.8.2.2.1 in combinazioni sismiche, γM = 2

Comb.	Quota	N	M	σ0	Mu	c.s.	Verifica
SLV 6	8.55	-274	-1415.41	0	0	0	No, e>l/2
SLV 6	11.66	1082	330.83	0	0	0	No, Trazione
SLV 9	8.55	-679	-1094.61	0	0	0	No, e>l/2
SLV 9	11.66	1250	314.59	0	0	0	No, Trazione
SLV 1	8.55	-1059	-920.63	0	0	0	No, e>l/2
SLV 1	11.66	-594	73.88	7298	75.71	1.025	Si
SLV 8	8.55	-3868	1067.59	0	0	0	No, e>l/2
SLV 8	11.66	-3146	-457.44	0	0	0	No, e>l/2
SLV 12	8.55	-4274	1388.4	0	0	0	No, e>l/2
SLV 12	11.66	-2978	-473.67	0	0	0	No, e>l/2
SLV 5	8.55	-274	-1415.41	0	0	0	No, e>l/2
SLV 5	11.66	1082	330.83	0	0	0	No, Trazione
SLV 11	8.55	-4274	1388.4	0	0	0	No, e>l/2
SLV 11	11.66	-2978	-473.67	0	0	0	No, e>l/2
SLV 10	8.55	-679	-1094.61	0	0	0	No, e>l/2
SLV 10	11.66	1250	314.59	0	0	0	No, Trazione
SLV 2	8.55	-1059	-920.63	0	0	0	No, e>l/2
SLV 2	11.66	-594	73.88	7298	75.71	1.025	Si
SLV 7	8.55	-3868	1067.59	0	0	0	No, e>l/2
SLV 7	11.66	-3146	-457.44	0	0	0	No, e>l/2

Verifica a taglio nel piano secondo D.M. 17-01-18 (N.T.C.) §7.8.2.2.2 con rottura per scorrimento in combinazioni non sismiche, γM = 3

Comb.	Quota	N	V par	M	σ0	σN	l'	fvd	Vt scorr.	Vt fess.diag.	Vt,lim	c.s.	Verifica
SLU 55	8.55	-4115	110	35.65		50572	0.2712	10833	881			7.99	Si
SLU 55	11.66	-1581	-370	-145.62		40372	0.1305	10833	424			1.15	Si
SLU 26	8.55	-3551	111	45.1		43643	0.2712	10833	881			7.96	Si
SLU 26	11.66	-1370	-355	-132.23		38922	0.1174	10745	378			1.07	Si
SLU 34	8.55	-3734	100	23.34		45890	0.2712	10833	881			8.84	Si
SLU 34	11.66	-1435	-362	-129.61		35205	0.1359	10250	418			1.15	Si
SLU 44	8.55	-3810	113	42.66		46825	0.2712	10833	881			7.81	Si
SLU 44	11.66	-1396	-341	-132.36		38026	0.1224	10626	390			1.14	Si
SLU 47	8.55	-3932	121	57.41		48325	0.2712	10833	881			7.26	Si
SLU 47	11.66	-1517	-363	-148.23		44500	0.1136	10833	369			1.02	Si
SLU 5	8.55	-3351	114	55.25		41187	0.2712	10833	881			7.7	Si
SLU 5	11.66	-1277	-334	-128.28		40326	0.1056	10833	343			1.03	Si
SLU 68	8.55	-4132	118	47.26		50781	0.2712	10833	881			7.49	Si
SLU 68	11.66	-1609	-383	-152.18		43561	0.1232	10833	400			1.04	Si
SLU 13	8.55	-3534	103	33.49		43434	0.2712	10833	881			8.52	Si
SLU 13	11.66	-1342	-342	-125.66		35519	0.126	10291	389			1.14	Si
SLU 2	8.55	-3229	106	40.5		39687	0.2712	10833	881			8.32	Si
SLU 2	11.66	-1157	-312	-112.4		33434	0.1153	10013	346			1.11	Si
SLU 23	8.55	-3429	102	30.35		42143	0.2712	10833	881			8.62	Si
SLU 23	11.66	-1250	-332	-116.35		32669	0.1275	9911	379			1.14	Si

Verifica a taglio nel piano secondo D.M. 17-01-18 (N.T.C.) §7.8.2.2.2 con rottura per scorrimento in combinazioni sismiche, γM = 2

Comb.	Quota	N	V par	M	σ0	σN	l'	fvd	Vt scorr.	Vt fess.diag.	Vt,lim	c.s.	Verifica
SLV 8	8.55	-3868	94	1067.59		0	0	8333	0			0	No, Vu<V
SLV 8	11.66	-3146	-1348	-457.44		0	0	8333	0			0	No, Vu<V
SLV 11	8.55	-4274	237	1388.4		0	0	8333	0			0	No, Vu<V
SLV 11	11.66	-2978	-1677	-473.67		0	0	8333	0			0	No, Vu<V
SLV 9	8.55	-679	-65	-1094.61		0	0	8333	0			0	No, Vu<V
SLV 9	11.66	1250	1096	314.59		0	0	8333	0			0	No, Vu<V
SLV 2	8.55	-1059	-269	-920.63		0	0	8333	0			0	No, Vu<V
SLV 2	11.66	-594	838	73.88		58956	0.0336	16250	164			0.2	No, Vu<V
SLV 12	8.55	-4274	237	1388.4		0	0	8333	0			0	No, Vu<V

Comb.	Quota	N	V par	M	σ0	σN	l'	fvd	Vt scorr.	Vt fess.diag.	Vt,lim	c.s.	Verifica
SLV 12	11.66	-2978	-1677	-473.67		0	0	8333	0			0	No, Vu<V
SLV 1	8.55	-1059	-269	-920.63		0	0	8333	0			0	No, Vu<V
SLV 1	11.66	-594	838	73.88		58956	0.0336	16250	164			0.2	No, Vu<V
SLV 10	8.55	-679	-65	-1094.61		0	0	8333	0			0	No, Vu<V
SLV 10	11.66	1250	1096	314.59		0	0	8333	0			0	No, Vu<V
SLV 5	8.55	-274	-208	-1415.41		0	0	8333	0			0	No, Vu<V
SLV 5	11.66	1082	1425	330.83		0	0	8333	0			0	No, Vu<V
SLV 6	8.55	-274	-208	-1415.41		0	0	8333	0			0	No, Vu<V
SLV 6	11.66	1082	1425	330.83		0	0	8333	0			0	No, Vu<V
SLV 7	8.55	-3868	94	1067.59		0	0	8333	0			0	No, Vu<V
SLV 7	11.66	-3146	-1348	-457.44		0	0	8333	0			0	No, Vu<V

Verifica a pressoflessione fuori piano D.M. 17-01-18 (N.T.C.)

quota 10.3 Wa 0.05 denominatore 8 γM = 2

Comb.	fd	Sa	σ0	N	M	Mc	Coeff.s.	Verifica
SLV 6	143750	0.46	0	1046	35.06	0	0	No, Trazione
SLV 9	143750	0.46	0	1682	35.06	0	0	No, Trazione
SLV 5	143750	0.46	0	1046	35.06	0	0	No, Trazione
SLV 10	143750	0.46	0	1682	35.06	0	0	No, Trazione
SLV 14	143750	0.46	0	249	35.06	0	0	No, Trazione
SLV 13	143750	0.46	0	249	35.06	0	0	No, Trazione
SLV 16	143750	0.46	19863	-1616	35.06	203.02	5.79	Si
SLV 15	143750	0.46	19863	-1616	35.06	203.02	5.79	Si
SLV 1	143750	0.46	22994	-1871	35.06	227.83	6.5	Si
SLV 2	143750	0.46	22994	-1871	35.06	227.83	6.5	Si

Verifica dei meccanismi locali di collasso con analisi cinematica lineare

forza di aggancio al piano = 0 quota mezzeria = 10.3 Wa = 0.05 Ta = 0.0682

Comb.	N top	N base	V orto	α0	M*	e*	a0*	aLim	Verifica
SLV 6	3010	-274	26	0	0	0	0	8.47445	No, Trazione
SLV 13	453	-2411	-14	0	0	0	0	9.51147	No, Trazione
SLV 1	169	-1059	32	0	0	0	0	9.51147	No, Trazione
SLV 10	3095	-679	12	0	0	0	0	8.47445	No, Trazione
SLV 2	169	-1059	32	0	0	0	0	9.51147	No, Trazione
SLV 5	3010	-274	26	0	0	0	0	8.47445	No, Trazione
SLV 9	3095	-679	12	0	0	0	0	8.47445	No, Trazione
SLV 14	453	-2411	-14	0	0	0	0	9.51147	No, Trazione
SLV 15	-1898	-3489	-23	0.037	233.5	0.95	0.56892	9.51147	No
SLV 16	-1898	-3489	-23	0.037	233.5	0.95	0.56892	9.51147	No

Tabella dei coefficienti di sicurezza minimi

Stato limite	Coeff.s.	Comb.	Verifica
PF_SLU	1.07	SLU 47	Si
V_SLU	1.017	SLU 47	Si
PF_SLV	0	SLV 10	No
V_SLV	0	SLV 1	No
PFFP_SLV	0	SLV 14	No
R_SLV	0	SLV 14	No

Maschio 173

Verifiche condotte secondo D.M. 17-01-18 (N.T.C.)

Dati geometrici

X ini.	Y ini.	X fin.	Y fin.	Quota i.	Quota.s	l	Sp.	h netta	h ini.	h fin.	a	a.s.,sx	a.s.,dx
-14.857	-4.696	-13.727	-4.696	L5	L6	1.129	0.3	3.5	3.5	3.5			

Caratteristiche del materiale

(Circolare 7 21-01-19 C8.5.I) Muratura in mattoni pieni e malta di calce LC2_Corti

fb	fk	fvk0	fmedio	τ0	fv0	μ	ϕ	fv,lim	E	G	FC
600000			345000	9000	20000	0.58	0.77	32500	320000000	128000000	1.2

Verifica a pressoflessione nel piano secondo D.M. 17-01-18 NTC §7.8.2.2.1 in combinazioni non sismiche, γM = 3

Comb.	Quota	N	M	σ0	Mu	c.s.	Verifica
SLU 82	8.55	-8135	400.9	24010	3239.93	8.082	Si
SLU 82	11.66	-4963	127.62	14647	2298.59	18.011	Si
SLU 38	8.55	-6851	361.99	20219	2908.39	8.034	Si
SLU 38	11.66	-4580	100.96	13518	2157.29	21.367	Si
SLU 34	8.55	-6648	362.87	19621	2849.92	7.854	Si
SLU 34	11.66	-4317	94.89	12741	2056.56	21.672	Si
SLU 42	8.55	-6813	380.93	20108	2897.64	7.607	Si
SLU 42	11.66	-4406	99.56	13004	2090.98	21.001	Si
SLU 36	8.55	-6881	358.98	20309	2917.03	8.126	Si
SLU 36	11.66	-4577	104.99	13508	2155.97	20.534	Si
SLU 31	8.55	-6433	351.32	18988	2786.18	7.931	Si
SLU 31	11.66	-4016	93.66	11853	1937.94	20.69	Si
SLU 84	8.55	-8350	412.45	24644	3288.72	7.974	Si
SLU 84	11.66	-5264	128.85	15535	2405.55	18.669	Si
SLU 41	8.55	-6795	362.3	20055	2892.54	7.984	Si
SLU 41	11.66	-4350	106.82	12838	2069.21	19.371	Si
SLU 40	8.55	-6598	369.39	19475	2835.36	7.676	Si
SLU 40	11.66	-4105	98.33	12116	1973.47	20.069	Si
SLU 39	8.55	-6581	350.75	19422	2830.09	8.069	Si
SLU 39	11.66	-4049	105.59	11950	1951	18.477	Si

Verifica a pressoflessione nel piano secondo D.M. 17-01-18 NTC §7.8.2.2.1 in combinazioni sismiche, γM = 2

Comb.	Quota	N	M	σ0	Mu	c.s.	Verifica
SLV 2	8.55	-6312	-255.89	18628	3020.88	11.805	Si
SLV 2	11.66	-2464	537.56	7273	1308.69	2.434	Si
SLV 12	8.55	-2974	653.58	8776	1558.61	2.385	Si
SLV 12	11.66	-3439	-286.35	10149	1780.58	6.218	Si
SLV 6	8.55	-8666	-210.73	25575	3869.22	18.361	Si
SLV 6	11.66	-3471	492.75	10243	1795.64	3.644	Si
SLV 8	8.55	-2735	424.35	8073	1442.53	3.399	Si
SLV 8	11.66	-2782	-77.01	8212	1465.65	19.033	Si
SLV 3	8.55	-4533	-65.36	13378	2279.37	34.871	Si
SLV 3	11.66	-2258	366.64	6663	1205.38	3.288	Si
SLV 4	8.55	-4533	-65.36	13378	2279.37	34.871	Si
SLV 4	11.66	-2258	366.64	6663	1205.38	3.288	Si
SLV 5	8.55	-8666	-210.73	25575	3869.22	18.361	Si
SLV 5	11.66	-3471	492.75	10243	1795.64	3.644	Si
SLV 11	8.55	-2974	653.58	8776	1558.61	2.385	Si
SLV 11	11.66	-3439	-286.35	10149	1780.58	6.218	Si
SLV 7	8.55	-2735	424.35	8073	1442.53	3.399	Si
SLV 7	11.66	-2782	-77.01	8212	1465.65	19.033	Si
SLV 1	8.55	-6312	-255.89	18628	3020.88	11.805	Si
SLV 1	11.66	-2464	537.56	7273	1308.69	2.434	Si

Verifica a taglio nel piano secondo D.M. 17-01-18 (N.T.C.) §7.8.2.2.2 con rottura per scorrimento in combinazioni non sismiche, γM = 3

Comb.	Quota	N	V par	M	σ0	σN	I'	fvd	Vt scorr.	Vt fess.diag.	Vt,lim	c.s.	Verifica
SLU 36	8.55	-6881	446	358.98		20309	1.1294	8263	2800			6.27	Si
SLU 36	11.66	-4577	-273	104.99		13508	1.1294	7357	2493			9.12	Si
SLU 42	8.55	-6813	456	380.93		20108	1.1294	8237	2791			6.13	Si
SLU 42	11.66	-4406	-303	99.56		13004	1.1294	7289	2470			8.15	Si
SLU 84	8.55	-8350	484	412.45		24644	1.1294	8841	2996			6.19	Si
SLU 84	11.66	-5264	-348	128.85		15535	1.1294	7627	2584			7.43	Si
SLU 76	8.55	-8185	465	394.39		24157	1.1294	8776	2974			6.39	Si
SLU 76	11.66	-5175	-388	124.18		15272	1.1294	7592	2572			6.63	Si
SLU 52	8.55	-7565	341	315.62		22328	1.1294	8533	2891			8.48	Si
SLU 52	11.66	-4515	-388	118.97		13326	1.1294	7332	2484			6.4	Si
SLU 73	8.55	-7970	435	382.84		23524	1.1294	8692	2945			6.77	Si
SLU 73	11.66	-4874	-410	122.95		14384	1.1294	7473	2532			6.17	Si
SLU 80	8.55	-8388	481	393.51		24755	1.1294	8856	3001			6.23	Si
SLU 80	11.66	-5438	-311	130.25		16049	1.1294	7695	2607			8.38	Si
SLU 78	8.55	-8418	475	390.49		24845	1.1294	8868	3005			6.33	Si
SLU 78	11.66	-5434	-318	134.28		16039	1.1294	7694	2607			8.19	Si
SLU 38	8.55	-6851	453	361.99		20219	1.1294	8251	2796			6.17	Si
SLU 38	11.66	-4580	-266	100.96		13518	1.1294	7358	2493			9.36	Si
SLU 34	8.55	-6648	437	362.87		19621	1.1294	8172	2769			6.34	Si
SLU 34	11.66	-4317	-343	94.89		12741	1.1294	7254	2458			7.17	Si

Verifica a taglio nel piano secondo D.M. 17-01-18 (N.T.C.) §7.8.2.2.2 con rottura per scorrimento in combinazioni sismiche, γM = 2

Comb.	Quota	N	V par	M	σ0	σN	I'	fvd	Vt scorr.	Vt fess.diag.	Vt,lim	c.s.	Verifica
SLV 3	8.55	-4533	-1930	-65.36		13378	1.1294	11009	3730			1.93	Si
SLV 3	11.66	-2258	-112	366.64		6663	1.1294	9666	3275			29.31	Si
SLV 15	8.55	-5327	2995	698.74		15723	1.1294	11478	3889			1.3	Si
SLV 15	11.66	-4445	-732	-331.16		13120	1.1294	10957	3713			5.08	Si
SLV 4	8.55	-4533	-1930	-65.36		13378	1.1294	11009	3730			1.93	Si
SLV 4	11.66	-2258	-112	366.64		6663	1.1294	9666	3275			29.31	Si
SLV 14	8.55	-7107	2430	508.21		20974	1.1294	12528	4245			1.75	Si
SLV 14	11.66	-4652	-270	-160.24		13729	1.1294	11079	3754			13.92	Si
SLV 1	8.55	-6312	-2495	-255.89		18628	1.1294	12059	4086			1.64	Si
SLV 1	11.66	-2464	350	537.56		7900	1.0397	9913	3092			8.83	Si
SLV 12	8.55	-2974	1931	653.58		9579	1.0347	10249	3182			1.65	Si
SLV 12	11.66	-3439	-1053	-286.35		10149	1.1294	10363	3511			3.33	Si
SLV 2	8.55	-6312	-2495	-255.89		18628	1.1294	12059	4086			1.64	Si
SLV 2	11.66	-2464	350	537.56		7900	1.0397	9913	3092			8.83	Si
SLV 13	8.55	-7107	2430	508.21		20974	1.1294	12528	4245			1.75	Si
SLV 13	11.66	-4652	-270	-160.24		13729	1.1294	11079	3754			13.92	Si
SLV 16	8.55	-5327	2995	698.74		15723	1.1294	11478	3889			1.3	Si
SLV 16	11.66	-4445	-732	-331.16		13120	1.1294	10957	3713			5.08	Si
SLV 11	8.55	-2974	1931	653.58		9579	1.0347	10249	3182			1.65	Si
SLV 11	11.66	-3439	-1053	-286.35		10149	1.1294	10363	3511			3.33	Si

Verifica a pressoflessione fuori piano D.M. 17-01-18 (N.T.C.)

quota 10.3 Wa 0.05 denominatore 8 γM = 2

Comb.	fd	Sa	σ0	N	M	Mc	Coeff.s.	Verifica
SLV 4	143750	0.46	6772	-2295	145.99	325.11	2.23	Si
SLV 3	143750	0.46	6772	-2295	145.99	325.11	2.23	Si
SLV 7	143750	0.46	7800	-2643	145.99	371.12	2.54	Si
SLV 8	143750	0.46	7800	-2643	145.99	371.12	2.54	Si
SLV 2	143750	0.46	9915	-3359	145.99	463.01	3.17	Si
SLV 1	143750	0.46	9915	-3359	145.99	463.01	3.17	Si
SLV 11	143750	0.46	11824	-4006	145.99	542.77	3.72	Si
SLV 12	143750	0.46	11824	-4006	145.99	542.77	3.72	Si
SLV 6	143750	0.46	18275	-6192	145.99	789.89	5.41	Si
SLV 5	143750	0.46	18275	-6192	145.99	789.89	5.41	Si

Verifica dei meccanismi locali di collasso con analisi cinematica lineare

forza di aggancio al piano = 0 quota mezzeria = 10.3 Wa = 0.05 Ta = 0.0682

Comb.	N top	N base	V orto	α0	M*	e*	a0*	aLim	Verifica
SLV 8	-2022	-2735	121	0.019	380.7	0.898	0.30011	8.47445	No
SLV 7	-2022	-2735	121	0.019	380.7	0.898	0.30011	8.47445	No
SLV 11	-3161	-2974	131	0.023	493.3	0.914	0.36141	8.47445	No

Comb.	N top	N base	V orto	α0	M*	e*	a0*	aLim	Verifica
SLV 12	-3161	-2974	131	0.023	493.3	0.914	0.36141	8.47445	No
SLV 6	-3247	-8666	-131	0.023	501.8	0.915	0.36612	8.47445	No
SLV 5	-3247	-8666	-131	0.023	501.8	0.915	0.36612	8.47445	No
SLV 10	-4386	-8904	-121	0.029	616.1	0.927	0.45505	8.47445	No
SLV 9	-4386	-8904	-121	0.029	616.1	0.927	0.45505	8.47445	No
SLV 2	-1489	-6312	-55	0.039	329.4	0.892	0.64142	9.51147	No
SLV 1	-1489	-6312	-55	0.039	329.4	0.892	0.64142	9.51147	No

Tabella dei coefficienti di sicurezza minimi

Stato limite	Coeff.s.	Comb.	Verifica
PF_SLU	7.607	SLU 42	Si
V_SLU	6.126	SLU 42	Si
PF_SLV	2.385	SLV 11	Si
V_SLV	1.299	SLV 15	Si
PFFP_SLV	2.227	SLV 3	Si
R_SLV	0.035	SLV 7	No

Maschio 174

Verifiche condotte secondo D.M. 17-01-18 (N.T.C.)

Dati geometrici

X ini.	Y ini.	X fin.	Y fin.	Quota i.	Quota.s	l	Sp.	h netta	h ini.	h fin.	a	a.s.,sx	a.s.,dx
-15.01	1.141	-15.01	1.423	L5	L6	0.282	0.14	3.5	3.5	3.5			

Caratteristiche del materiale

(Circolare 7 21-01-19 C8.5.I) Muratura in mattoni pieni e malta di calce LC2_Corti

fb	fk	fvk0	fmedio	τ0	fv0	μ	ϕ	fv,lim	E	G	FC
600000			345000	9000	20000	0.58	0.77	32500	320000000	128000000	1.2

Verifica a pressoflessione nel piano secondo D.M. 17-01-18 NTC §7.8.2.2.1 in combinazioni non sismiche, γM = 3

Comb.	Quota	N	M	σ0	Mu	c.s.	Verifica
SLU 53	8.55	-2461	125.41	62427	80.95	0.646	No, M>Mu
SLU 53	10.65	-98	-95.82	0	0	0	No, e>l/2
SLU 58	8.55	-2554	131.64	64790	73.59	0.559	No, M>Mu
SLU 58	10.65	-69	-101.96	0	0	0	No, e>l/2
SLU 55	8.55	-2418	124	61343	84.08	0.678	No, M>Mu
SLU 55	10.65	-69	-95.7	0	0	0	No, e>l/2
SLU 56	8.55	-2587	132.12	65610	70.85	0.536	No, M>Mu
SLU 56	10.65	-98	-101.88	0	0	0	No, e>l/2
SLU 60	8.55	-2411	125.44	61147	84.63	0.675	No, M>Mu
SLU 60	10.65	-51	-95.22	0	0	0	No, e>l/2
SLU 61	8.55	-2404	124.88	60988	85.07	0.681	No, M>Mu
SLU 61	10.65	-51	-95.1	0	0	0	No, e>l/2
SLU 59	8.55	-2548	131.08	64631	74.11	0.565	No, M>Mu
SLU 59	10.65	-69	-101.84	0	0	0	No, e>l/2
SLU 1	8.55	-1649	82.16	41837	112.95	1.375	Si
SLU 1	10.65	-83	-62.56	0	0	0	No, e>l/2
SLU 57	8.55	-2580	131.57	65451	71.39	0.543	No, M>Mu
SLU 57	10.65	-98	-101.76	0	0	0	No, e>l/2
SLU 54	8.55	-2455	124.85	62268	81.42	0.652	No, M>Mu
SLU 54	10.65	-98	-95.7	0	0	0	No, e>l/2

Verifica a pressoflessione nel piano secondo D.M. 17-01-18 NTC §7.8.2.2.1 in combinazioni sismiche, γM = 2

Comb.	Quota	N	M	σ0	Mu	c.s.	Verifica
SLV 7	8.55	-4030	360.29	102226	92.7	0.257	No, M>Mu
SLV 7	10.65	1411	-180.62	0	0	0	No, Trazione
SLV 6	8.55	855	-227.66	0	0	0	No, Trazione
SLV 6	10.65	-2101	92.63	53282	166.78	1.8	Si
SLV 10	8.55	436	-177.25	0	0	0	No, Trazione
SLV 10	10.65	-1546	41.62	39205	147.79	3.551	Si
SLV 8	8.55	-4030	360.29	102226	92.7	0.257	No, M>Mu
SLV 8	10.65	1411	-180.62	0	0	0	No, Trazione
SLV 2	8.55	-366	-80.7	0	0	0	No, e>l/2
SLV 2	10.65	-1519	56.51	38531	146.43	2.591	Si
SLV 1	8.55	-366	-80.7	0	0	0	No, e>l/2
SLV 1	10.65	-1519	56.51	38531	146.43	2.591	Si
SLV 12	8.55	-4449	410.7	112858	47.83	0.116	No, M>Mu
SLV 12	10.65	1966	-231.64	0	0	0	No, Trazione
SLV 5	8.55	855	-227.66	0	0	0	No, Trazione
SLV 5	10.65	-2101	92.63	53282	166.78	1.8	Si
SLV 9	8.55	436	-177.25	0	0	0	No, Trazione
SLV 9	10.65	-1546	41.62	39205	147.79	3.551	Si
SLV 11	8.55	-4449	410.7	112858	47.83	0.116	No, M>Mu
SLV 11	10.65	1966	-231.64	0	0	0	No, Trazione

Verifica a taglio nel piano secondo D.M. 17-01-18 (N.T.C.) §7.8.2.2.2 con rottura per scorrimento in combinazioni non sismiche, γM = 3

Comb.	Quota	N	V par	M	σ0	σN	l'	fvd	Vt scorr.	Vt fess.diag.	Vt,lim	c.s.	Verifica
SLU 55	8.55	-2418	273	124		64318	0.2686	10833	407			1.49	Si
SLU 55	10.65	-69	234	-95.7		0	0	5556	0			0	No, Vu<V
SLU 54	8.55	-2455	275	124.85		64989	0.2698	10833	409			1.49	Si
SLU 54	10.65	-98	234	-95.7		0	0	5556	0			0	No, Vu<V
SLU 1	8.55	-1649	181	82.16		43161	0.273	10833	414			2.29	Si
SLU 1	10.65	-83	153	-62.56		0	0	5556	0			0	No, Vu<V
SLU 60	8.55	-2411	277	125.44		64665	0.2663	10833	404			1.46	Si
SLU 60	10.65	-51	233	-95.22		0	0	5556	0			0	No, Vu<V

Comb.	Quota	N	V par	M	σ0	σN	I'	fvd	Vt scorr.	Vt fess.diag.	Vt,lim	c.s.	Verifica
SLU 59	8.55	-2548	290	131.08		67896	0.2681	10833	407			1.4	Si
SLU 59	10.65	-69	248	-101.84		0	0	5556	0			0	No, Vu<V
SLU 58	8.55	-2554	292	131.64		68133	0.2678	10833	406			1.39	Si
SLU 58	10.65	-69	249	-101.96		0	0	5556	0			0	No, Vu<V
SLU 61	8.55	-2404	275	124.88		64427	0.2666	10833	404			1.47	Si
SLU 61	10.65	-51	233	-95.1		0	0	5556	0			0	No, Vu<V
SLU 57	8.55	-2580	291	131.57		68408	0.2694	10833	409			1.41	Si
SLU 57	10.65	-98	249	-101.76		0	0	5556	0			0	No, Vu<V
SLU 56	8.55	-2587	292	132.12		68644	0.2691	10833	408			1.4	Si
SLU 56	10.65	-98	249	-101.88		0	0	5556	0			0	No, Vu<V
SLU 53	8.55	-2461	277	125.41		65225	0.2695	10833	409			1.48	Si
SLU 53	10.65	-98	234	-95.82		0	0	5556	0			0	No, Vu<V

Verifica a taglio nel piano secondo D.M. 17-01-18 (N.T.C.) §7.8.2.2.2 con rottura per scorrimento in combinazioni sismiche, γM = 2

Comb.	Quota	N	V par	M	σ0	σN	I'	fvd	Vt scorr.	Vt fess.diag.	Vt,lim	c.s.	Verifica
SLV 8	8.55	-4030	1023	360.29		186697	0.1542	16250	351			0.34	No, Vu<V
SLV 8	10.65	1411	468	-180.62		0	0	8333	0			0	No, Vu<V
SLV 11	8.55	-4449	1159	410.7		218477	0.1455	16250	331			0.29	No, Vu<V
SLV 11	10.65	1966	583	-231.64		0	0	8333	0			0	No, Vu<V
SLV 9	8.55	436	-620	-177.25		0	0	8333	0			0	No, Vu<V
SLV 9	10.65	-1546	-128	41.62		39205	0.2816	16174	638			4.99	Si
SLV 10	8.55	436	-620	-177.25		0	0	8333	0			0	No, Vu<V
SLV 10	10.65	-1546	-128	41.62		39205	0.2816	16174	638			4.99	Si
SLV 7	8.55	-4030	1023	360.29		186697	0.1542	16250	351			0.34	No, Vu<V
SLV 7	10.65	1411	468	-180.62		0	0	8333	0			0	No, Vu<V
SLV 6	8.55	855	-756	-227.66		0	0	8333	0			0	No, Vu<V
SLV 6	10.65	-2101	-243	92.63		53282	0.2816	16250	641			2.64	Si
SLV 2	8.55	-366	-292	-80.7		0	0	8333	0			0	No, Vu<V
SLV 2	10.65	-1519	-128	56.51		38531	0.2816	16039	632			4.92	Si
SLV 1	8.55	-366	-292	-80.7		0	0	8333	0			0	No, Vu<V
SLV 1	10.65	-1519	-128	56.51		38531	0.2816	16039	632			4.92	Si
SLV 12	8.55	-4449	1159	410.7		218477	0.1455	16250	331			0.29	No, Vu<V
SLV 12	10.65	1966	583	-231.64		0	0	8333	0			0	No, Vu<V
SLV 5	8.55	855	-756	-227.66		0	0	8333	0			0	No, Vu<V
SLV 5	10.65	-2101	-243	92.63		53282	0.2816	16250	641			2.64	Si

Verifica a pressoflessione fuori piano D.M. 17-01-18 (N.T.C.)

quota 10.3 Wa 0.03 denominatore 8 γM = 2

Comb.	fd	Sa	σ0	N	M	Mc	Coeff.s.	Verifica
SLV 14	143750	0.46	0	301	18.2	0	0	No, Trazione
SLV 8	143750	0.46	0	1378	18.2	0	0	No, Trazione
SLV 7	143750	0.46	0	1378	18.2	0	0	No, Trazione
SLV 15	143750	0.46	0	1353	18.2	0	0	No, Trazione
SLV 16	143750	0.46	0	1353	18.2	0	0	No, Trazione
SLV 11	143750	0.46	0	1933	18.2	0	0	No, Trazione
SLV 12	143750	0.46	0	1933	18.2	0	0	No, Trazione
SLV 13	143750	0.46	0	301	18.2	0	0	No, Trazione
SLV 4	143750	0.46	12567	-495	18.2	31.11	1.71	Si
SLV 3	143750	0.46	12567	-495	18.2	31.11	1.71	Si

Verifica dei meccanismi locali di collasso con analisi cinematica lineare

forza di aggancio al piano = 0 quota mezzeria = 10.3 Wa = 0.03 Ta = 0.1461

Comb.	N top	N base	V orto	α0	M*	e*	a0*	aLim	Verifica
SLV 9	120	436	0	0	0	0	0	18.80115	No, Trazione
SLV 10	120	436	0	0	0	0	0	18.80115	No, Trazione
SLV 5	225	855	2	0	0	0	0	18.80115	No, Trazione
SLV 6	225	855	2	0	0	0	0	18.80115	No, Trazione
SLV 16	-1286	-3228	-3	0.02	150.3	0.961	0.29936	18.99716	No
SLV 15	-1286	-3228	-3	0.02	150.3	0.961	0.29936	18.99716	No
SLV 11	-1856	-4449	-2	0.02	208.3	0.971	0.30322	18.80115	No
SLV 12	-1856	-4449	-2	0.02	208.3	0.971	0.30322	18.80115	No
SLV 2	-345	-366	3	0.02	55.1	0.911	0.31237	18.99716	No
SLV 1	-345	-366	3	0.02	55.1	0.911	0.31237	18.99716	No

Tabella dei coefficienti di sicurezza minimi

Stato limite	Coeff.s.	Comb.	Verifica
PF_SLU	0	SLU 1	No
V_SLU	0	SLU 1	No
PF_SLV	0	SLV 16	No
V_SLV	0	SLV 1	No
PFFP_SLV	0	SLV 16	No
R_SLV	0	SLV 10	No

Maschio 175

Verifiche condotte secondo D.M. 17-01-18 (N.T.C.)

Dati geometrici

X ini.	Y ini.	X fin.	Y fin.	Quota i.	Quota.s	l	Sp.	h netta	h ini.	h fin.	a	a.s.,sx	a.s.,dx
-15.01	2.223	-15.01	6.64	L5	L6	4.417	0.14	3.5	3.5	3.5			

Caratteristiche del materiale

(Circolare 7 21-01-19 C8.5.I) Muratura in mattoni pieni e malta di calce LC2_Corti

fb	fk	fvk0	fmedio	τ0	fv0	μ	ϕ	fv,lim	E	G	FC
600000			345000	9000	20000	0.58	0.77	32500	320000000	128000000	1.2

Verifica a pressoflessione nel piano secondo D.M. 17-01-18 NTC §7.8.2.2.1 in combinazioni non sismiche, γM = 3

Comb.	Quota	N	M	σ0	Mu	c.s.	Verifica
SLU 83	8.55	-20090	-850.55	32486	26675.4	31.363	Si
SLU 83	10.65	-15956	-5565.64	25802	24078.29	4.326	Si
SLU 82	8.55	-19586	-989.96	31671	26438.91	26.707	Si
SLU 82	10.65	-15425	-5444.34	24943	23635.92	4.341	Si
SLU 81	8.55	-19597	-998.99	31690	26444.5	26.471	Si
SLU 81	10.65	-15438	-5464.64	24964	23647.03	4.327	Si
SLU 77	8.55	-20161	-715.77	32601	26706.76	37.312	Si
SLU 77	10.65	-16217	-5493.45	26224	24286.63	4.421	Si
SLU 79	8.55	-19810	-640.19	32034	26546.77	41.467	Si
SLU 79	10.65	-15897	-5417.6	25707	24030.58	4.436	Si
SLU 75	8.55	-19656	-855.19	31785	26473.39	30.956	Si
SLU 75	10.65	-15686	-5372.15	25365	23856.42	4.441	Si
SLU 74	8.55	-19668	-864.22	31804	26478.91	30.639	Si
SLU 74	10.65	-15699	-5392.45	25386	23867.24	4.426	Si
SLU 80	8.55	-19799	-631.16	32015	26541.39	42.052	Si
SLU 80	10.65	-15884	-5397.3	25686	24020	4.45	Si
SLU 78	8.55	-20149	-706.74	32582	26701.73	37.782	Si
SLU 78	10.65	-16204	-5473.15	26203	24276.41	4.436	Si
SLU 84	8.55	-20079	-841.52	32468	26670.3	31.693	Si
SLU 84	10.65	-15943	-5545.34	25781	24067.77	4.34	Si

Verifica a pressoflessione nel piano secondo D.M. 17-01-18 NTC §7.8.2.2.1 in combinazioni sismiche, γM = 2

Comb.	Quota	N	M	σ0	Mu	c.s.	Verifica
SLV 12	8.55	-13831	4587.2	22366	24956.46	5.44	Si
SLV 12	10.65	-14649	-11622.41	23689	26082.11	2.244	Si
SLV 9	8.55	-12505	-5516.68	20222	23048.69	4.178	Si
SLV 9	10.65	-7339	2560.85	11868	14634.71	5.715	Si
SLV 15	8.55	-13312	1424.06	21527	24221.73	17.009	Si
SLV 15	10.65	-13346	-8811.01	21580	24269.38	2.754	Si
SLV 16	8.55	-13312	1424.06	21527	24221.73	17.009	Si
SLV 16	10.65	-13346	-8811.01	21580	24269.38	2.754	Si
SLV 5	8.55	-12553	-5836.58	20298	23118.39	3.961	Si
SLV 5	10.65	-6263	4406.06	10128	12686.83	2.879	Si
SLV 7	8.55	-13879	4267.29	22442	25022.5	5.864	Si
SLV 7	10.65	-13574	-9777.21	21949	24593.87	2.515	Si
SLV 10	8.55	-12505	-5516.68	20222	23048.69	4.178	Si
SLV 10	10.65	-7339	2560.85	11868	14634.71	5.715	Si
SLV 6	8.55	-12553	-5836.58	20298	23118.39	3.961	Si
SLV 6	10.65	-6263	4406.06	10128	12686.83	2.879	Si
SLV 8	8.55	-13879	4267.29	22442	25022.5	5.864	Si
SLV 8	10.65	-13574	-9777.21	21949	24593.87	2.515	Si
SLV 11	8.55	-13831	4587.2	22366	24956.46	5.44	Si
SLV 11	10.65	-14649	-11622.41	23689	26082.11	2.244	Si

Verifica a taglio nel piano secondo D.M. 17-01-18 (N.T.C.) §7.8.2.2.2 con rottura per scorrimento in combinazioni non sismiche, γM = 3

Comb.	Quota	N	V par	M	σ0	σN	I'	fvd	Vt scorr.	Vt fess.diag.	Vt,lim	c.s.	Verifica
SLU 39	8.55	-16606	26	-875.23		26853	4.4172	9136	5650			218.26	Si
SLU 39	10.65	-13048	26	-4671.54		21099	4.4172	8369	5175			201.07	Si
SLU 48	8.55	-16463	-32	-451.69		26622	4.4172	9105	5631			174.74	Si
SLU 48	10.65	-13396	-32	-4353.4		21663	4.4172	8444	5222			163.6	Si
SLU 9	8.55	-13110	-30	-243.32		21199	4.4172	8382	5184			173.3	Si
SLU 9	10.65	-10674	-30	-3464.15		17260	4.4172	7857	4859			163.44	Si
SLU 51	8.55	-16101	-38	-367.07		26036	4.4172	9027	5582			147.84	Si
SLU 51	10.65	-13064	-37	-4257.25		21124	4.4172	8372	5177			138.11	Si
SLU 8	8.55	-13121	-30	-252.35		21217	4.4172	8385	5185			173.11	Si
SLU 8	10.65	-10687	-30	-3484.45		17281	4.4172	7860	4861			163.38	Si
SLU 50	8.55	-16112	-38	-376.1		26054	4.4172	9029	5584			147.72	Si
SLU 50	10.65	-13077	-38	-4277.55		21145	4.4172	8375	5179			138.08	Si
SLU 49	8.55	-16452	-32	-442.66		26603	4.4172	9103	5629			174.92	Si
SLU 49	10.65	-13383	-32	-4333.1		21642	4.4172	8441	5220			163.66	Si
SLU 40	8.55	-16595	26	-866.2		26834	4.4172	9133	5648			217.85	Si
SLU 40	10.65	-13035	26	-4651.24		21078	4.4172	8366	5174			200.83	Si
SLU 47	8.55	-15601	-28	-509.5		25227	4.4172	8919	5516			200.47	Si
SLU 47	10.65	-12537	-27	-4142.71		20272	4.4172	8259	5107			187.28	Si
SLU 6	8.55	-13472	-24	-327.93		21785	4.4172	8460	5232			214.65	Si
SLU 6	10.65	-11007	-24	-3560.3		17798	4.4172	7929	4903			202.96	Si

Verifica a taglio nel piano secondo D.M. 17-01-18 (N.T.C.) §7.8.2.2.2 con rottura per scorrimento in combinazioni sismiche, γM = 2

Comb.	Quota	N	V par	M	σ0	σN	I'	fvd	Vt scorr.	Vt fess.diag.	Vt,lim	c.s.	Verifica
SLV 14	8.55	-12914	-4097	-1607.1		20883	4.4172	12510	7736			1.89	Si
SLV 14	10.65	-11152	-3621	-4556.03		18034	4.4172	11940	7384			2.04	Si
SLV 13	8.55	-12914	-4097	-1607.1		20883	4.4172	12510	7736			1.89	Si
SLV 13	10.65	-11152	-3621	-4556.03		18034	4.4172	11940	7384			2.04	Si
SLV 9	8.55	-12505	-9340	-5516.68		20222	4.4172	12378	7655			0.82	No, Vu<V
SLV 9	10.65	-7339	-8065	2560.85		11868	4.4172	10707	6621			0.82	No, Vu<V
SLV 11	8.55	-13831	8484	4587.2		22366	4.4172	12807	7920			0.93	No, Vu<V
SLV 11	10.65	-14649	7271	-11622.41		24646	4.2457	13262	7883			1.08	Si
SLV 12	8.55	-13831	8484	4587.2		22366	4.4172	12807	7920			0.93	No, Vu<V
SLV 12	10.65	-14649	7271	-11622.41		24646	4.2457	13262	7883			1.08	Si
SLV 8	8.55	-13879	9338	4267.29		22442	4.4172	12822	7929			0.85	No, Vu<V
SLV 8	10.65	-13574	8063	-9777.21		21949	4.4172	12723	7868			0.98	No, Vu<V
SLV 5	8.55	-12553	-8487	-5836.58		20298	4.4172	12393	7664			0.9	No, Vu<V
SLV 5	10.65	-6263	-7273	4406.06		10128	4.4172	10359	6406			0.88	No, Vu<V
SLV 10	8.55	-12505	-9340	-5516.68		20222	4.4172	12378	7655			0.82	No, Vu<V
SLV 10	10.65	-7339	-8065	2560.85		11868	4.4172	10707	6621			0.82	No, Vu<V
SLV 6	8.55	-12553	-8487	-5836.58		20298	4.4172	12393	7664			0.9	No, Vu<V
SLV 6	10.65	-6263	-7273	4406.06		10128	4.4172	10359	6406			0.88	No, Vu<V
SLV 7	8.55	-13879	9338	4267.29		22442	4.4172	12822	7929			0.85	No, Vu<V

Comb.	Quota	N	V par	M	σ0	σN	l'	fvd	Vt scorr.	Vt fess.diag.	Vt,lim	c.s.	Verifica
SLV 7	10.65	-13574	8063	-9777.21		21949	4.4172	12723	7868			0.98	No, Vu<V

Verifica a pressoflessione fuori piano D.M. 17-01-18 (N.T.C.)

quota 10.3 Wa 0.03 denominatore 8 γM = 2

Comb.	fd	Sa	σ0	N	M	Mc	Coeff.s.	Verifica
SLV 6	143750	0.46	11328	-7005	285.5	444.92	1.56	Si
SLV 5	143750	0.46	11328	-7005	285.5	444.92	1.56	Si
SLV 9	143750	0.46	12864	-7955	285.5	498.24	1.75	Si
SLV 10	143750	0.46	12864	-7955	285.5	498.24	1.75	Si
SLV 1	143750	0.46	13173	-8146	285.5	508.76	1.78	Si
SLV 2	143750	0.46	13173	-8146	285.5	508.76	1.78	Si
SLV 4	143750	0.46	16290	-10074	285.5	611.16	2.14	Si
SLV 3	143750	0.46	16290	-10074	285.5	611.16	2.14	Si
SLV 14	143750	0.46	18293	-11312	285.5	673.32	2.36	Si
SLV 13	143750	0.46	18293	-11312	285.5	673.32	2.36	Si

Verifica dei meccanismi locali di collasso con analisi cinematica lineare

forza di aggancio al piano = 0 quota mezzeria = 10.3 Wa = 0.03 Ta = 0.1461

Comb.	N top	N base	V orto	α0	M*	e*	a0*	aLim	Verifica
SLV 15	-7255	-13312	6	0.024	1049.2	0.923	0.37047	18.99716	No
SLV 16	-7255	-13312	6	0.024	1049.2	0.923	0.37047	18.99716	No
SLV 12	-6897	-13831	7	0.024	1013.2	0.921	0.37353	18.80115	No
SLV 11	-6897	-13831	7	0.024	1013.2	0.921	0.37353	18.80115	No
SLV 14	-7022	-12914	3	0.024	1025.8	0.922	0.3778	18.99716	No
SLV 13	-7022	-12914	3	0.024	1025.8	0.922	0.3778	18.99716	No
SLV 7	-6357	-13879	3	0.024	959.1	0.918	0.38442	18.80115	No
SLV 8	-6357	-13879	3	0.024	959.1	0.918	0.38442	18.80115	No
SLV 9	-6121	-12505	-4	0.024	935.4	0.916	0.38673	18.80115	No
SLV 10	-6121	-12505	-4	0.024	935.4	0.916	0.38673	18.80115	No

Tabella dei coefficienti di sicurezza minimi

Stato limite	Coeff.s.	Comb.	Verifica
PF_SLU	4.326	SLU 83	Si
V_SLU	138.075	SLU 50	Si
PF_SLV	2.244	SLV 11	Si
V_SLV	0.82	SLV 9	No
PFFP_SLV	1.558	SLV 5	Si
R_SLV	0.02	SLV 15	No

Maschio 176

Verifiche condotte secondo D.M. 17-01-18 (N.T.C.)

Dati geometrici

X ini.	Y ini.	X fin.	Y fin.	Quota i.	Quota.s	l	Sp.	h netta	h ini.	h fin.	a	a.s.,sx	a.s.,dx
-13.727	-4.696	-13.727	-3.323	L5	Z medio 1024 cm	1.373	0.28	1.69	1.69	1.69			

Caratteristiche del materiale

(Circolare 7 21-01-19 C8.5.I) Muratura in mattoni pieni e malta di calce LC2_Corti

fb	fk	fvk0	fmedio	τ0	fv0	μ	ϕ	fv,lim	E	G	FC
600000			345000	9000	20000	0.58	0.77	32500	320000000	128000000	1.2

Verifica a pressoflessione nel piano secondo D.M. 17-01-18 NTC §7.8.2.2.1 in combinazioni non sismiche, γM = 3

Comb.	Quota	N	M	σ0	Mu	c.s.	Verifica
SLU 83	8.55	-11097	36.38	28856	4921.01	135.264	Si
SLU 83	10.24	-8536	362.15	22197	4264.57	11.776	Si
SLU 40	8.55	-9003	36.61	23411	4405.73	120.326	Si
SLU 40	10.24	-6927	348.39	18012	3704.89	10.634	Si
SLU 19	8.55	-8252	24.47	21459	4174.13	170.554	Si
SLU 19	10.24	-6345	298.37	16499	3474.59	11.645	Si
SLU 60	8.55	-10109	18.44	26288	4701.93	254.916	Si
SLU 60	10.24	-7710	336.49	20048	3991.43	11.862	Si
SLU 39	8.55	-8990	30.61	23376	4401.79	143.79	Si
SLU 39	10.24	-6890	369.92	17917	3690.94	9.978	Si
SLU 42	8.55	-9240	42.41	24027	4473.63	105.486	Si
SLU 42	10.24	-7171	324.03	18647	3797.19	11.719	Si
SLU 18	8.55	-8239	18.47	21424	4169.74	225.735	Si
SLU 18	10.24	-6308	319.89	16404	3459.71	10.815	Si
SLU 82	8.55	-10874	36.59	28276	4875.22	133.246	Si
SLU 82	10.24	-8328	365	21656	4198.62	11.503	Si
SLU 41	8.55	-9226	36.41	23992	4469.83	122.772	Si
SLU 41	10.24	-7135	345.55	18553	3783.63	10.95	Si
SLU 81	8.55	-10860	30.59	28241	4872.39	159.302	Si
SLU 81	10.24	-8292	386.52	21561	4186.9	10.832	Si

Verifica a pressoflessione nel piano secondo D.M. 17-01-18 NTC §7.8.2.2.1 in combinazioni sismiche, γM = 2

Comb.	Quota	N	M	σ0	Mu	c.s.	Verifica
SLV 4	8.55	-7102	661.26	18469	4140.09	6.261	Si
SLV 4	10.24	-5704	-265.27	14831	3441.35	12.973	Si
SLV 9	8.55	-9790	-738.98	25457	5322.14	7.202	Si
SLV 9	10.24	-6797	740.33	17675	3992.53	5.393	Si
SLV 13	8.55	-7972	-624.88	20730	4545.77	7.275	Si
SLV 13	10.24	-5690	601.82	14797	3434.48	5.707	Si
SLV 12	8.55	-5126	501.14	13329	3136.05	6.258	Si

Comb.	Quota	N	M	σ0	Mu	c.s.	Verifica
SLV 12	10.24	-4375	-231.08	11376	2724.6	11.791	Si
SLV 7	8.55	-5285	775.37	13742	3220.94	4.154	Si
SLV 7	10.24	-4597	-403.78	11953	2847.92	7.053	Si
SLV 14	8.55	-7972	-624.88	20730	4545.77	7.275	Si
SLV 14	10.24	-5690	601.82	14797	3434.48	5.707	Si
SLV 11	8.55	-5126	501.14	13329	3136.05	6.258	Si
SLV 11	10.24	-4375	-231.08	11376	2724.6	11.791	Si
SLV 3	8.55	-7102	661.26	18469	4140.09	6.261	Si
SLV 3	10.24	-5704	-265.27	14831	3441.35	12.973	Si
SLV 8	8.55	-5285	775.37	13742	3220.94	4.154	Si
SLV 8	10.24	-4597	-403.78	11953	2847.92	7.053	Si
SLV 10	8.55	-9790	-738.98	25457	5322.14	7.202	Si
SLV 10	10.24	-6797	740.33	17675	3992.53	5.393	Si

Verifica a taglio nel piano secondo D.M. 17-01-18 (N.T.C.) §7.8.2.2.2 con rottura per scorrimento in combinazioni non sismiche, γM = 3

Comb.	Quota	N	V par	M	σ0	σN	l'	fvd	Vt scorr.	Vt fess.diag.	Vt,lim	c.s.	Verifica
SLU 60	8.55	-10109	-650	18.44		26288	1.3734	9061	3484			5.36	Si
SLU 60	10.24	-7710	-761	336.49		20048	1.3734	8229	3164			4.16	Si
SLU 41	8.55	-9226	-623	36.41		23992	1.3734	8754	3367			5.41	Si
SLU 41	10.24	-7135	-727	345.55		18553	1.3734	8029	3088			4.25	Si
SLU 32	8.55	-8952	-577	39.83		23279	1.3734	8659	3330			5.77	Si
SLU 32	10.24	-6900	-654	295.66		17941	1.3734	7948	3056			4.68	Si
SLU 74	8.55	-10823	-646	39.8		28143	1.3734	9308	3579			5.54	Si
SLU 74	10.24	-8301	-715	312.26		21586	1.3734	8434	3243			4.53	Si
SLU 40	8.55	-9003	-583	36.61		23411	1.3734	8677	3337			5.73	Si
SLU 40	10.24	-6927	-729	348.39		18012	1.3734	7957	3060			4.2	Si
SLU 83	8.55	-11097	-691	36.38		28856	1.3734	9403	3616			5.23	Si
SLU 83	10.24	-8536	-789	362.15		22197	1.3734	8515	3275			4.15	Si
SLU 39	8.55	-8990	-685	30.61		23376	1.3734	8672	3335			4.87	Si
SLU 39	10.24	-6890	-819	369.92		17917	1.3734	7945	3055			3.73	Si
SLU 82	8.55	-10874	-651	36.59		28276	1.3734	9326	3586			5.51	Si
SLU 82	10.24	-8328	-790	365		21656	1.3734	8443	3247			4.11	Si
SLU 18	8.55	-8239	-581	18.47		21424	1.3734	8412	3235			5.56	Si
SLU 18	10.24	-6308	-699	319.89		16404	1.3734	7743	2978			4.26	Si
SLU 81	8.55	-10860	-753	30.59		28241	1.3734	9321	3585			4.76	Si
SLU 81	10.24	-8292	-881	386.52		21561	1.3734	8430	3242			3.68	Si

Verifica a taglio nel piano secondo D.M. 17-01-18 (N.T.C.) §7.8.2.2.2 con rottura per scorrimento in combinazioni sismiche, γM = 2

Comb.	Quota	N	V par	M	σ0	σN	l'	fvd	Vt scorr.	Vt fess.diag.	Vt,lim	c.s.	Verifica
SLV 9	8.55	-9790	-4034	-738.98		25457	1.3734	13425	5163			1.28	Si
SLV 9	10.24	-6797	-3683	740.33		17675	1.3734	11868	4564			1.24	Si
SLV 15	8.55	-6573	-2506	-252.84		17092	1.3734	11752	4519			1.8	Si
SLV 15	10.24	-4964	-2413	310.4		12907	1.3734	10915	4197			1.74	Si
SLV 16	8.55	-6573	-2506	-252.84		17092	1.3734	11752	4519			1.8	Si
SLV 16	10.24	-4964	-2413	310.4		12907	1.3734	10915	4197			1.74	Si
SLV 14	8.55	-7972	-4149	-624.88		20730	1.3734	12479	4799			1.16	Si
SLV 14	10.24	-5690	-3869	601.82		14797	1.3734	11293	4343			1.12	Si
SLV 4	8.55	-7102	3303	661.26		18469	1.3734	12027	4625			1.4	Si
SLV 4	10.24	-5704	2973	-265.27		14831	1.3734	11300	4345			1.46	Si
SLV 7	8.55	-5285	3188	775.37		13742	1.3734	11082	4262			1.34	Si
SLV 7	10.24	-4597	2787	-403.78		11953	1.3734	10724	4124			1.48	Si
SLV 8	8.55	-5285	3188	775.37		13742	1.3734	11082	4262			1.34	Si
SLV 8	10.24	-4597	2787	-403.78		11953	1.3734	10724	4124			1.48	Si
SLV 10	8.55	-9790	-4034	-738.98		25457	1.3734	13425	5163			1.28	Si
SLV 10	10.24	-6797	-3683	740.33		17675	1.3734	11868	4564			1.24	Si
SLV 3	8.55	-7102	3303	661.26		18469	1.3734	12027	4625			1.4	Si
SLV 3	10.24	-5704	2973	-265.27		14831	1.3734	11300	4345			1.46	Si
SLV 13	8.55	-7972	-4149	-624.88		20730	1.3734	12479	4799			1.16	Si
SLV 13	10.24	-5690	-3869	601.82		14797	1.3734	11293	4343			1.12	Si

Verifica a pressoflessione fuori piano D.M. 17-01-18 (N.T.C.)

quota 9.395 Wa 0.05 denominatore 8 γM = 2

Comb.	fd	Sa	σ0	N	M	Mc	Coeff.s.	Verifica
SLV 11	143750	0.44	13198	-5075	37.97	633.8	16.69	Si
SLV 12	143750	0.44	13198	-5075	37.97	633.8	16.69	Si
SLV 7	143750	0.44	13415	-5159	37.97	642.96	16.93	Si
SLV 8	143750	0.44	13415	-5159	37.97	642.96	16.93	Si
SLV 16	143750	0.44	15878	-6106	37.97	743.78	19.59	Si
SLV 15	143750	0.44	15878	-6106	37.97	743.78	19.59	Si
SLV 3	143750	0.44	16603	-6385	37.97	772.43	20.34	Si
SLV 4	143750	0.44	16603	-6385	37.97	772.43	20.34	Si
SLV 13	143750	0.44	18393	-7073	37.97	841.21	22.16	Si
SLV 14	143750	0.44	18393	-7073	37.97	841.21	22.16	Si

Verifica dei meccanismi locali di collasso con analisi cinematica lineare

forza di aggancio al piano = 0 quota mezzeria = 9.395 Wa = 0.05 Ta = 0.017

Comb.	N top	N base	V orto	α0	M*	e*	a0*	aLim	Verifica
SLV 12	-4375	-5126	-366	0.019	537.3	0.951	0.28742	4.41429	No
SLV 11	-4375	-5126	-366	0.019	537.3	0.951	0.28742	4.41429	No
SLV 7	-4597	-5285	-293	0.036	559.8	0.952	0.54384	4.41429	No
SLV 8	-4597	-5285	-293	0.036	559.8	0.952	0.54384	4.41429	No
SLV 5	-7019	-9949	380	0.039	806.1	0.966	0.5909	4.41429	No
SLV 6	-7019	-9949	380	0.039	806.1	0.966	0.5909	4.41429	No
SLV 9	-6797	-9790	307	0.048	783.5	0.965	0.72074	4.41429	No
SLV 10	-6797	-9790	307	0.048	783.5	0.965	0.72074	4.41429	No
SLV 16	-4964	-6573	-216	0.053	597.1	0.955	0.80176	4.5251	No
SLV 15	-4964	-6573	-216	0.053	597.1	0.955	0.80176	4.5251	No

Tabella dei coefficienti di sicurezza minimi

Stato limite	Coeff.s.	Comb.	Verifica
PF_SLU	9.978	SLU 39	Si
V_SLU	3.681	SLU 81	Si
PF_SLV	4.154	SLV 7	Si
V_SLV	1.122	SLV 13	Si
PFFP_SLV	16.693	SLV 11	Si
R_SLV	0.065	SLV 11	No

Maschio 177

Verifiche condotte secondo D.M. 17-01-18 (N.T.C.)

Dati geometrici

X ini.	Y ini.	X fin.	Y fin.	Quota i.	Quota.s	l	Sp.	h netta	h ini.	h fin.	a	a.s.,sx	a.s.,dx
-13.727	-4.696	-13.727	-3.323	Z medio 1024 cm	L6	1.373	0.28	1.81	1.81	1.81			

Caratteristiche del materiale

(Circolare 7 21-01-19 C8.5.I) Muratura in mattoni pieni e malta di calce LC2_Corti

fb	fk	fvk0	fmedio	τ0	fv0	μ	ϕ	fv,lim	E	G	FC
600000			345000	9000	20000	0.58	0.77	32500	320000000	128000000	1.2

Verifica a pressoflessione nel piano secondo D.M. 17-01-18 NTC §7.8.2.2.1 in combinazioni non sismiche, γM = 3

Comb.	Quota	N	M	σ0	Mu	c.s.	Verifica
SLU 78	10.24	-7080	-693.16	18412	3763.3	5.429	Si
SLU 78	12.05	-5724	23.19	14883	3212.37	138.507	Si
SLU 79	10.24	-7008	-691.04	18224	3735.94	5.406	Si
SLU 79	12.05	-5631	18.84	14643	3171.94	168.354	Si
SLU 83	10.24	-6981	-690.4	18154	3725.77	5.397	Si
SLU 83	12.05	-5481	83.78	14251	3105.13	37.064	Si
SLU 82	10.24	-6797	-671.04	17674	3654.72	5.446	Si
SLU 82	12.05	-5259	113.8	13675	3005.14	26.408	Si
SLU 81	10.24	-6775	-671.9	17616	3646.12	5.427	Si
SLU 81	12.05	-5225	132.91	13587	2989.56	22.493	Si
SLU 80	10.24	-7030	-690.18	18281	3744.31	5.425	Si
SLU 80	12.05	-5665	-0.27	14732	3186.9	1000	Si
SLU 75	10.24	-6874	-674.67	17874	3684.54	5.461	Si
SLU 75	12.05	-5468	72.33	14219	3099.53	42.854	Si
SLU 84	10.24	-7003	-689.54	18211	3734.17	5.415	Si
SLU 84	12.05	-5515	64.66	14340	3120.32	48.255	Si
SLU 77	10.24	-7058	-694.03	18354	3754.97	5.41	Si
SLU 77	12.05	-5690	42.31	14795	3197.49	75.578	Si
SLU 74	10.24	-6852	-675.53	17817	3676.02	5.442	Si
SLU 74	12.05	-5434	91.44	14130	3084.27	33.73	Si

Verifica a pressoflessione nel piano secondo D.M. 17-01-18 NTC §7.8.2.2.1 in combinazioni sismiche, γM = 2

Comb.	Quota	N	M	σ0	Mu	c.s.	Verifica
SLV 16	10.24	-4402	-670.24	11446	2739.58	4.087	Si
SLV 16	12.05	-3446	291.93	8961	2193.01	7.512	Si
SLV 9	10.24	-6067	-843	15776	3628.33	4.304	Si
SLV 9	12.05	-4279	596.53	11127	2670.92	4.477	Si
SLV 10	10.24	-6067	-843	15776	3628.33	4.304	Si
SLV 10	12.05	-4279	596.53	11127	2670.92	4.477	Si
SLV 6	10.24	-6055	-673.77	15746	3622.37	5.376	Si
SLV 6	12.05	-4349	385.23	11310	2710.34	7.036	Si
SLV 5	10.24	-6055	-673.77	15746	3622.37	5.376	Si
SLV 5	12.05	-4349	385.23	11310	2710.34	7.036	Si
SLV 8	10.24	-3472	-104.23	9029	2208.33	21.188	Si
SLV 8	12.05	-3194	-462.64	8306	2044.45	4.419	Si
SLV 14	10.24	-5177	-841.1	13461	3163.22	3.761	Si
SLV 14	12.05	-3793	546.29	9862	2394.32	4.383	Si
SLV 13	10.24	-5177	-841.1	13461	3163.22	3.761	Si
SLV 13	12.05	-3793	546.29	9862	2394.32	4.383	Si
SLV 15	10.24	-4402	-670.24	11446	2739.58	4.087	Si
SLV 15	12.05	-3446	291.93	8961	2193.01	7.512	Si
SLV 7	10.24	-3472	-104.23	9029	2208.33	21.188	Si
SLV 7	12.05	-3194	-462.64	8306	2044.45	4.419	Si

Verifica a taglio nel piano secondo D.M. 17-01-18 (N.T.C.) §7.8.2.2.2 con rottura per scorrimento in combinazioni non sismiche, γM = 3

Comb.	Quota	N	V par	M	σ0	σN	l'	fvd	Vt scorr.	Vt fess.diag.	Vt,lim	c.s.	Verifica
SLU 40	10.24	-5597	-392	-550.76		14553	1.3734	7496	2883			7.36	Si
SLU 40	12.05	-4322	-350	107.23		11238	1.3734	7054	2713			7.74	Si
SLU 18	10.24	-5120	-388	-509.08		13313	1.3734	7331	2819			7.27	Si
SLU 18	12.05	-3908	-340	102.18		10162	1.3734	6910	2658			7.81	Si
SLU 61	10.24	-6342	-353	-628.49		16491	1.3734	7754	2982			8.45	Si
SLU 61	12.05	-4879	-300	89.63		12688	1.3734	7247	2787			9.28	Si
SLU 41	10.24	-5781	-373	-570.12		15033	1.3734	7560	2907			7.79	Si
SLU 41	12.05	-4543	-261	77.21		11814	1.3734	7131	2742			10.51	Si
SLU 39	10.24	-5575	-456	-551.63		14496	1.3734	7488	2880			6.31	Si
SLU 39	12.05	-4288	-407	126.35		11149	1.3734	7042	2708			6.66	Si
SLU 83	10.24	-6981	-403	-690.4		18154	1.3734	7976	3067			7.62	Si
SLU 83	12.05	-5481	-278	83.78		14251	1.3734	7456	2867			10.33	Si
SLU 81	10.24	-6775	-485	-671.9		17616	1.3734	7904	3040			6.26	Si
SLU 81	12.05	-5225	-423	132.91		13587	1.3734	7367	2833			6.69	Si
SLU 82	10.24	-6797	-421	-671.04		17674	1.3734	7912	3043			7.23	Si
SLU 82	12.05	-5259	-367	113.8		13675	1.3734	7379	2838			7.73	Si

Comb.	Quota	N	V par	M	σ0	σN	l'	fvd	Vt scorr.	Vt fess.diag.	Vt,lim	c.s.	Verifica
SLU 60	10.24	-6320	-417	-629.35		16434	1.3734	7747	2979			7.14	Si
SLU 60	12.05	-4845	-357	108.75		12599	1.3734	7235	2782			7.8	Si
SLU 74	10.24	-6852	-367	-675.53		17817	1.3734	7931	3050			8.3	Si
SLU 74	12.05	-5434	-271	91.44		14130	1.3734	7440	2861			10.56	Si

Verifica a taglio nel piano secondo D.M. 17-01-18 (N.T.C.) §7.8.2.2.2 con rottura per scorrimento in combinazioni sismiche, γM = 2

Comb.	Quota	N	V par	M	σ0	σN	l'	fvd	Vt scorr.	Vt fess.diag.	Vt,lim	c.s.	Verifica
SLV 7	10.24	-3472	2393	-104.23		9029	1.3734	10139	3899			1.63	Si
SLV 7	12.05	-3194	2081	-462.64		8306	1.3734	9995	3844			1.85	Si
SLV 4	10.24	-4363	2519	-106.13		11345	1.3734	10602	4077			1.62	Si
SLV 4	12.05	-3681	2496	-412.4		9571	1.3734	10248	3941			1.58	Si
SLV 13	10.24	-5177	-2995	-841.1		13461	1.3734	11026	4240			1.42	Si
SLV 13	12.05	-3793	-2880	546.29		9862	1.3734	10306	3963			1.38	Si
SLV 3	10.24	-4363	2519	-106.13		11345	1.3734	10602	4077			1.62	Si
SLV 3	12.05	-3681	2496	-412.4		9571	1.3734	10248	3941			1.58	Si
SLV 9	10.24	-6067	-2869	-843		15776	1.3734	11489	4418			1.54	Si
SLV 9	12.05	-4279	-2465	596.53		11127	1.3734	10559	4061			1.65	Si
SLV 16	10.24	-4402	-1805	-670.24		11446	1.3734	10623	4085			2.26	Si
SLV 16	12.05	-3446	-1913	291.93		8961	1.3734	10126	3894			2.03	Si
SLV 8	10.24	-3472	2393	-104.23		9029	1.3734	10139	3899			1.63	Si
SLV 8	12.05	-3194	2081	-462.64		8306	1.3734	9995	3844			1.85	Si
SLV 15	10.24	-4402	-1805	-670.24		11446	1.3734	10623	4085			2.26	Si
SLV 15	12.05	-3446	-1913	291.93		8961	1.3734	10126	3894			2.03	Si
SLV 14	10.24	-5177	-2995	-841.1		13461	1.3734	11026	4240			1.42	Si
SLV 14	12.05	-3793	-2880	546.29		9862	1.3734	10306	3963			1.38	Si
SLV 10	10.24	-6067	-2869	-843		15776	1.3734	11489	4418			1.54	Si
SLV 10	12.05	-4279	-2465	596.53		11127	1.3734	10559	4061			1.65	Si

Verifica a pressoflessione fuori piano D.M. 17-01-18 (N.T.C.)

quota 11.145 Wa 0.05 denominatore 8 γM = 2

Comb.	fd	Sa	σ0	N	M	Mc	Coeff.s.	Verifica
SLV 12	143750	0.48	9224	-3547	47.16	459.1	9.74	Si
SLV 11	143750	0.48	9224	-3547	47.16	459.1	9.74	Si
SLV 7	143750	0.48	9908	-3810	47.16	490.2	10.39	Si
SLV 8	143750	0.48	9908	-3810	47.16	490.2	10.39	Si
SLV 16	143750	0.48	9958	-3829	47.16	492.42	10.44	Si
SLV 15	143750	0.48	9958	-3829	47.16	492.42	10.44	Si
SLV 13	143750	0.48	11272	-4335	47.16	550.88	11.68	Si
SLV 14	143750	0.48	11272	-4335	47.16	550.88	11.68	Si
SLV 3	143750	0.48	12241	-4707	47.16	593.01	12.57	Si
SLV 4	143750	0.48	12241	-4707	47.16	593.01	12.57	Si

Verifica dei meccanismi locali di collasso con analisi cinematica lineare

forza di aggancio al piano = 0 quota mezzeria = 11.145 Wa = 0.05 Ta = 0.0195

Comb.	N top	N base	V orto	α0	M*	e*	a0*	aLim	Verifica
SLV 2	-4027	-5138	12	0.085	508.6	0.945	1.31026	4.97445	No
SLV 1	-4027	-5138	12	0.085	508.6	0.945	1.31026	4.97445	No
SLV 14	-3793	-5177	-9	0.086	484.8	0.943	1.33146	4.97445	No
SLV 13	-3793	-5177	-9	0.086	484.8	0.943	1.33146	4.97445	No
SLV 4	-3681	-4363	9	0.087	473.5	0.941	1.33629	4.97445	No
SLV 3	-3681	-4363	9	0.087	473.5	0.941	1.33629	4.97445	No
SLV 15	-3446	-4402	-12	0.086	449.7	0.939	1.33652	4.97445	No
SLV 16	-3446	-4402	-12	0.086	449.7	0.939	1.33652	4.97445	No
SLV 6	-4349	-6055	8	0.085	541.3	0.948	1.30917	4.83359	No
SLV 5	-4349	-6055	8	0.085	541.3	0.948	1.30917	4.83359	No

Tabella dei coefficienti di sicurezza minimi

Stato limite	Coeff.s.	Comb.	Verifica
PF_SLU	5.397	SLU 83	Si
V_SLU	6.262	SLU 81	Si
PF_SLV	3.761	SLV 13	Si
V_SLV	1.376	SLV 13	Si
PFFP_SLV	9.735	SLV 11	Si
R_SLV	0.263	SLV 1	No

Maschio 179

Verifiche condotte secondo D.M. 17-01-18 (N.T.C.)

Dati geometrici

X ini.	Y ini.	X fin.	Y fin.	Quota i.	Quota.s	l	Sp.	h netta	h ini.	h fin.	a	a.s.,sx	a.s.,dx
-13.727	-3.323	-13.727	-0.354	Z medio 940 cm	L6	2.969	0.28	2.655	1.81	3.5			

Caratteristiche del materiale

(Circolare 7 21-01-19 C8.5.I) Muratura in mattoni pieni e malta di calce LC2_Corti

fb	fk	fvk0	fmedio	τ0	fv0	μ	ϕ	fv,lim	E	G	FC
600000			345000	9000	20000	0.58	0.77	32500	320000000	128000000	1.2

Verifica a pressoflessione nel piano secondo D.M. 17-01-18 NTC §7.8.2.2.1 in combinazioni non sismiche, γM = 3

Comb.	Quota	N	M	σ0	Mu	c.s.	Verifica
SLU 39	10.24	-14643	1392.29	17613	17038.78	12.238	Si
SLU 39	12.05	-10807	649.89	12999	13483.67	20.748	Si
SLU 41	10.24	-15037	1396.18	18087	17366.95	12.439	Si
SLU 41	12.05	-11137	652.69	13396	13814.76	21.166	Si

Comb.	Quota	N	M	σ0	Mu	c.s.	Verifica
SLU 32	10.24	-14825	1267.33	17832	17191.35	13.565	Si
SLU 32	12.05	-11011	540.62	13244	13689.03	25.321	Si
SLU 35	10.24	-15219	1271.22	18305	17516.38	13.779	Si
SLU 35	12.05	-11341	543.42	13641	14017.16	25.794	Si
SLU 83	10.24	-18049	1483.82	21709	19653.8	13.245	Si
SLU 83	12.05	-13269	670.01	15961	15839.82	23.641	Si
SLU 40	10.24	-14572	1352.68	17528	16978.84	12.552	Si
SLU 40	12.05	-10690	567.38	12858	13364.91	23.555	Si
SLU 81	10.24	-17655	1479.93	21236	19377.6	13.094	Si
SLU 81	12.05	-12940	667.21	15564	15539.58	23.29	Si
SLU 84	10.24	-17978	1444.2	21624	19604.47	13.575	Si
SLU 84	12.05	-13152	587.5	15820	15733.72	26.781	Si
SLU 82	10.24	-17584	1440.31	21151	19327.04	13.419	Si
SLU 82	12.05	-12822	584.71	15423	15431.78	26.392	Si
SLU 42	10.24	-14966	1356.57	18001	17308.24	12.759	Si
SLU 42	12.05	-11020	570.18	13255	13697.69	24.023	Si

Verifica a pressoflessione nel piano secondo D.M. 17-01-18 NTC §7.8.2.2.1 in combinazioni sismiche, γM = 2

Comb.	Quota	N	M	σ0	Mu	c.s.	Verifica
SLV 12	10.24	-9717	1373.36	11688	13046.26	9.5	Si
SLV 12	12.05	-4442	-549.6	5343	6306.56	11.475	Si
SLV 14	10.24	-11524	1155.85	13861	15167.57	13.122	Si
SLV 14	12.05	-8909	285.79	10715	12065.81	42.219	Si
SLV 8	10.24	-10618	1059.42	12772	14115.91	13.324	Si
SLV 8	12.05	-5223	-404.91	6283	7355.65	18.166	Si
SLV 13	10.24	-11524	1155.85	13861	15167.57	13.122	Si
SLV 13	12.05	-8909	285.79	10715	12065.81	42.219	Si
SLV 11	10.24	-9717	1373.36	11688	13046.26	9.5	Si
SLV 11	12.05	-4442	-549.6	5343	6306.56	11.475	Si
SLV 16	10.24	-10205	1425.28	12275	13628.36	9.562	Si
SLV 16	12.05	-6427	-177.68	7730	8937.43	50.3	Si
SLV 7	10.24	-10618	1059.42	12772	14115.91	13.324	Si
SLV 7	12.05	-5223	-404.91	6283	7355.65	18.166	Si
SLV 5	10.24	-15014	161.3	18060	18995.79	117.766	Si
SLV 5	12.05	-13496	1140	16234	17374.43	15.241	Si
SLV 15	10.24	-10205	1425.28	12275	13628.36	9.562	Si
SLV 15	12.05	-6427	-177.68	7730	8937.43	50.3	Si
SLV 6	10.24	-15014	161.3	18060	18995.79	117.766	Si
SLV 6	12.05	-13496	1140	16234	17374.43	15.241	Si

Verifica a taglio nel piano secondo D.M. 17-01-18 (N.T.C.) §7.8.2.2.2 con rottura per scorrimento in combinazioni non sismiche, γM = 3

Comb.	Quota	N	V par	M	σ0	σN	l'	fvd	Vt scorr.	Vt fess.diag.	Vt,lim	c.s.	Verifica
SLU 34	10.24	-14441	1063	1164.15		17370	2.9692	7872	6544			6.16	Si
SLU 34	12.05	-10553	928	414.05		12693	2.9692	7248	6026			6.5	Si
SLU 73	10.24	-17059	1164	1247.89		20519	2.9692	8291	6893			5.92	Si
SLU 73	12.05	-12355	984	428.57		14861	2.9692	7537	6266			6.37	Si
SLU 76	10.24	-17453	1115	1251.78		20993	2.9692	8355	6946			6.23	Si
SLU 76	12.05	-12685	1004	431.37		15258	2.9692	7590	6310			6.29	Si
SLU 78	10.24	-18159	924	1319.24		21843	2.9692	8468	7040			7.62	Si
SLU 78	12.05	-13356	1029	478.23		16065	2.9692	7698	6400			6.22	Si
SLU 84	10.24	-17978	1035	1444.2		21624	2.9692	8439	7016			6.78	Si
SLU 84	12.05	-13152	996	587.5		15820	2.9692	7665	6372			6.4	Si
SLU 31	10.24	-14047	1112	1160.26		16897	2.9692	7808	6492			5.84	Si
SLU 31	12.05	-10223	908	411.25		12296	2.9692	7195	5982			6.59	Si
SLU 36	10.24	-15148	871	1231.61		18220	2.9692	7985	6638			7.62	Si
SLU 36	12.05	-11224	953	460.91		13500	2.9692	7356	6115			6.41	Si
SLU 10	10.24	-12642	984	905.08		15206	2.9692	7583	6304			6.41	Si
SLU 10	12.05	-9102	715	292.22		10948	2.9692	7015	5832			8.16	Si
SLU 40	10.24	-14572	1032	1352.68		17528	2.9692	7893	6562			6.36	Si
SLU 40	12.05	-10690	900	567.38		12858	2.9692	7270	6044			6.71	Si
SLU 75	10.24	-17766	973	1315.35		21369	2.9692	8405	6988			7.18	Si
SLU 75	12.05	-13026	1010	475.43		15668	2.9692	7645	6356			6.29	Si

Verifica a taglio nel piano secondo D.M. 17-01-18 (N.T.C.) §7.8.2.2.2 con rottura per scorrimento in combinazioni sismiche, γM = 2

Comb.	Quota	N	V par	M	σ0	σN	l'	fvd	Vt scorr.	Vt fess.diag.	Vt,lim	c.s.	Verifica
SLV 11	10.24	-9717	9048	1373.36		11688	2.9692	10671	8872			0.98	No, Vu<V
SLV 11	12.05	-4442	3290	-549.6		5343	2.9692	9402	7817			2.38	Si
SLV 10	10.24	-14114	-7381	475.24		16976	2.9692	11729	9751			1.32	Si
SLV 10	12.05	-12715	-2017	995.32		15294	2.9692	11392	9471			4.69	Si
SLV 16	10.24	-10205	4261	1425.28		12275	2.9692	10788	8969			2.1	Si
SLV 16	12.05	-6427	1610	-177.68		7730	2.9692	9879	8213			5.1	Si
SLV 6	10.24	-15014	-8207	161.3		18060	2.9692	11945	9931			1.21	Si
SLV 6	12.05	-13496	-2170	1140		16234	2.9692	11580	9627			4.44	Si
SLV 9	10.24	-14114	-7381	475.24		16976	2.9692	11729	9751			1.32	Si
SLV 9	12.05	-12715	-2017	995.32		15294	2.9692	11392	9471			4.69	Si
SLV 8	10.24	-10618	8223	1059.42		12772	2.9692	10888	9052			1.1	Si
SLV 8	12.05	-5223	3138	-404.91		6283	2.9692	9590	7973			2.54	Si
SLV 12	10.24	-9717	9048	1373.36		11688	2.9692	10671	8872			0.98	No, Vu<V
SLV 12	12.05	-4442	3290	-549.6		5343	2.9692	9402	7817			2.38	Si
SLV 15	10.24	-10205	4261	1425.28		12275	2.9692	10788	8969			2.1	Si
SLV 15	12.05	-6427	1610	-177.68		7730	2.9692	9879	8213			5.1	Si
SLV 7	10.24	-10618	8223	1059.42		12772	2.9692	10888	9052			1.1	Si
SLV 7	12.05	-5223	3138	-404.91		6283	2.9692	9590	7973			2.54	Si
SLV 5	10.24	-15014	-8207	161.3		18060	2.9692	11945	9931			1.21	Si
SLV 5	12.05	-13496	-2170	1140		16234	2.9692	11580	9627			4.44	Si

Verifica a pressoflessione fuori piano D.M. 17-01-18 (N.T.C.)

quota 11.145 Wa 0.05 denominatore 8 γM = 2

Comb.	fd	Sa	σ0	N	M	Mc	Coeff.s.	Verifica

Comb.	fd	Sa	σ0	N	M	Mc	Coeff.s.	Verifica
SLV 12	143750	0.48	8445	-7021	219.36	915.04	4.17	Si
SLV 11	143750	0.48	8445	-7021	219.36	915.04	4.17	Si
SLV 8	143750	0.48	9517	-7912	219.36	1021.46	4.66	Si
SLV 7	143750	0.48	9517	-7912	219.36	1021.46	4.66	Si
SLV 15	143750	0.48	10237	-8511	219.36	1091.66	4.98	Si
SLV 16	143750	0.48	10237	-8511	219.36	1091.66	4.98	Si
SLV 14	143750	0.48	12844	-10678	219.36	1337.81	6.1	Si
SLV 13	143750	0.48	12844	-10678	219.36	1337.81	6.1	Si
SLV 3	143750	0.48	13810	-11481	219.36	1425.69	6.5	Si
SLV 4	143750	0.48	13810	-11481	219.36	1425.69	6.5	Si

Verifica dei meccanismi locali di collasso con analisi cinematica lineare

forza di aggancio al piano = 0 quota mezzeria = 11.145 Wa = 0.05 Ta = 0.042

Comb.	N top	N base	V orto	α0	M*	e*	a0*	aLim	Verifica
SLV 8	-5223	-10618	126	0.05	852.4	0.909	0.79642	6.28542	No
SLV 7	-5223	-10618	126	0.05	852.4	0.909	0.79642	6.28542	No
SLV 3	-9030	-13208	74	0.056	1234.3	0.931	0.86687	6.7221	No
SLV 4	-9030	-13208	74	0.056	1234.3	0.931	0.86687	6.7221	No
SLV 12	-4442	-9717	112	0.052	775.1	0.904	0.82906	6.28542	No
SLV 11	-4442	-9717	112	0.052	775.1	0.904	0.82906	6.28542	No
SLV 9	-12715	-14114	-80	0.054	1607.2	0.945	0.83675	6.28542	No
SLV 10	-12715	-14114	-80	0.054	1607.2	0.945	0.83675	6.28542	No
SLV 6	-13496	-15014	-67	0.055	1686.5	0.947	0.84666	6.28542	No
SLV 5	-13496	-15014	-67	0.055	1686.5	0.947	0.84666	6.28542	No

Tabella dei coefficienti di sicurezza minimi

Stato limite	Coeff.s.	Comb.	Verifica
PF_SLU	12.238	SLU 39	Si
V_SLU	5.839	SLU 31	Si
PF_SLV	9.5	SLV 11	Si
V_SLV	0.98	SLV 11	No
PFFP_SLV	4.171	SLV 11	Si
R_SLV	0.127	SLV 7	No

Maschio 180

Verifiche condotte secondo D.M. 17-01-18 (N.T.C.)

Dati geometrici

X ini.	Y ini.	X fin.	Y fin.	Quota i.	Quota.s	l	Sp.	h netta	h ini.	h fin.	a	a.s.,sx	a.s.,dx
-13.727	-0.354	-13.727	0	L5	L6	0.354	0.28	3.5	3.5	3.5			

Caratteristiche del materiale

(Circolare 7 21-01-19 C8.5.I) Muratura in mattoni pieni e malta di calce LC2_Corti

fb	fk	fvk0	fmedio	τ0	fv0	μ	ϕ	fv,lim	E	G	FC
600000			345000	9000	20000	0.58	0.77	32500	320000000	128000000	1.2

Verifica a pressoflessione nel piano secondo D.M. 17-01-18 NTC §7.8.2.2.1 in combinazioni non sismiche, γM = 3

Comb.	Quota	N	M	σ0	Mu	c.s.	Verifica
SLU 69	8.55	-3010	-25.55	30376	333.9	13.068	Si
SLU 69	10.65	-3827	193.9	38630	356.02	1.836	Si
SLU 77	8.55	-3148	6.14	31775	339.71	55.372	Si
SLU 77	10.65	-4130	207.76	41686	356.77	1.717	Si
SLU 78	8.55	-3234	29.62	32643	342.89	11.578	Si
SLU 78	10.65	-3960	191.14	39971	356.84	1.867	Si
SLU 79	8.55	-3089	5.99	31179	337.34	56.285	Si
SLU 79	10.65	-4067	204.85	41054	356.94	1.742	Si
SLU 71	8.55	-2950	-25.69	29780	331.17	12.89	Si
SLU 71	10.65	-3765	190.99	37998	355.36	1.861	Si
SLU 37	8.55	-2528	7.19	25520	307.19	42.751	Si
SLU 37	10.65	-3488	180.47	35201	350.39	1.942	Si
SLU 74	8.55	-3109	13.59	31378	338.15	24.888	Si
SLU 74	10.65	-3962	193.22	39991	356.85	1.847	Si
SLU 83	8.55	-3109	27.02	31382	338.16	12.513	Si
SLU 83	10.65	-4029	196.25	40668	356.96	1.819	Si
SLU 35	8.55	-2587	7.33	26116	311.01	42.447	Si
SLU 35	10.65	-3550	183.38	35833	351.81	1.919	Si
SLU 80	8.55	-3175	29.47	32047	340.74	11.561	Si
SLU 80	10.65	-3898	188.23	39339	356.55	1.894	Si

Verifica a pressoflessione nel piano secondo D.M. 17-01-18 NTC §7.8.2.2.1 in combinazioni sismiche, γM = 2

Comb.	Quota	N	M	σ0	Mu	c.s.	Verifica
SLV 2	8.55	-1192	-294.67	0	0	0	No, e>l/2
SLV 2	10.65	-4813	333.83	48576	512.97	1.537	Si
SLV 1	8.55	-1192	-294.67	0	0	0	No, e>l/2
SLV 1	10.65	-4813	333.83	48576	512.97	1.537	Si
SLV 12	8.55	-4692	630.11	47356	508.37	0.807	No, M>Mu
SLV 12	10.65	1703	-315.02	0	0	0	No, Trazione
SLV 9	8.55	110	-556.66	0	0	0	No, Trazione
SLV 9	10.65	-6381	507.89	64410	533.87	1.051	Si
SLV 7	8.55	-4517	559.32	45593	500.98	0.896	No, M>Mu
SLV 7	10.65	1121	-262.43	0	0	0	No, Trazione
SLV 11	8.55	-4692	630.11	47356	508.37	0.807	No, M>Mu
SLV 11	10.65	1703	-315.02	0	0	0	No, Trazione
SLV 5	8.55	285	-627.45	0	0	0	No, Trazione
SLV 5	10.65	-6963	560.49	70284	523.33	0.934	No, M>Mu

Comb.	Quota	N	M	σ0	Mu	c.s.	Verifica
SLV 10	8.55	110	-556.66	0	0	0	No, Trazione
SLV 10	10.65	-6381	507.89	64410	533.87	1.051	Si
SLV 8	8.55	-4517	559.32	45593	500.98	0.896	No, M>Mu
SLV 8	10.65	1121	-262.43	0	0	0	No, Trazione
SLV 6	8.55	285	-627.45	0	0	0	No, Trazione
SLV 6	10.65	-6963	560.49	70284	523.33	0.934	No, M>Mu

Verifica a taglio nel piano secondo D.M. 17-01-18 (N.T.C.) §7.8.2.2.2 con rottura per scorrimento in combinazioni non sismiche, γM = 3

Comb.	Quota	N	V par	M	σ0	σN	I'	fvd	Vt scorr.	Vt fess.diag.	Vt,lim	c.s.	Verifica
SLU 37	8.55	-2528	-59	7.19		25520	0.3538	8958	888			15.01	Si
SLU 37	10.65	-3488	-1456	180.47		35201	0.3538	10249	1015			0.7	No, Vu<V
SLU 80	8.55	-3175	28	29.47		32047	0.3538	9828	974			34.51	Si
SLU 80	10.65	-3898	-1499	188.23		39339	0.3538	10801	1070			0.71	No, Vu<V
SLU 77	8.55	-3148	-59	6.14		31775	0.3538	9792	970			16.48	Si
SLU 77	10.65	-4130	-1665	207.76		41686	0.3538	10833	1073			0.64	No, Vu<V
SLU 78	8.55	-3234	29	29.62		32643	0.3538	9908	982			33.3	Si
SLU 78	10.65	-3960	-1519	191.14		39971	0.3538	10833	1073			0.71	No, Vu<V
SLU 74	8.55	-3109	-33	13.59		31378	0.3538	9739	965			29.27	Si
SLU 74	10.65	-3962	-1537	193.22		39991	0.3538	10833	1073			0.7	No, Vu<V
SLU 83	8.55	-3109	-9	27.02		31382	0.3538	9740	965			103.2	Si
SLU 83	10.65	-4029	-1565	196.25		40668	0.3538	10833	1073			0.69	No, Vu<V
SLU 35	8.55	-2587	-58	7.33		26116	0.3538	9038	895			15.47	Si
SLU 35	10.65	-3550	-1476	183.38		35833	0.3538	10333	1024			0.69	No, Vu<V
SLU 71	8.55	-2950	-118	-25.69		29780	0.3538	9526	944			7.99	Si
SLU 71	10.65	-3765	-1533	190.99		37998	0.3538	10622	1052			0.69	No, Vu<V
SLU 69	8.55	-3010	-117	-25.55		30376	0.3538	9606	952			8.14	Si
SLU 69	10.65	-3827	-1552	193.9		38630	0.3538	10706	1061			0.68	No, Vu<V
SLU 79	8.55	-3089	-60	5.99		31179	0.3538	9713	962			16.01	Si
SLU 79	10.65	-4067	-1645	204.85		41054	0.3538	10833	1073			0.65	No, Vu<V

Verifica a taglio nel piano secondo D.M. 17-01-18 (N.T.C.) §7.8.2.2.2 con rottura per scorrimento in combinazioni sismiche, γM = 2

Comb.	Quota	N	V par	M	σ0	σN	I'	fvd	Vt scorr.	Vt fess.diag.	Vt,lim	c.s.	Verifica
SLV 1	8.55	-1192	-1065	-294.67		0	0	8333	0			0	No, Vu<V
SLV 1	10.65	-4813	-2901	333.83		53268	0.3227	16250	1468			0.51	No, Vu<V
SLV 5	8.55	285	-2210	-627.45		0	0	8333	0			0	No, Vu<V
SLV 5	10.65	-6963	-5043	560.49		85966	0.2893	16250	1316			0.26	No, Vu<V
SLV 6	8.55	285	-2210	-627.45		0	0	8333	0			0	No, Vu<V
SLV 6	10.65	-6963	-5043	560.49		85966	0.2893	16250	1316			0.26	No, Vu<V
SLV 10	8.55	110	-1958	-556.66		0	0	8333	0			0	No, Vu<V
SLV 10	10.65	-6381	-4574	507.89		78052	0.292	16250	1329			0.29	No, Vu<V
SLV 7	8.55	-4517	1902	559.32		101271	0.1593	16250	725			0.38	No, Vu<V
SLV 7	10.65	1121	2640	-262.43		0	0	8333	0			0	No, Vu<V
SLV 2	8.55	-1192	-1065	-294.67		0	0	8333	0			0	No, Vu<V
SLV 2	10.65	-4813	-2901	333.83		53268	0.3227	16250	1468			0.51	No, Vu<V
SLV 12	8.55	-4692	2154	630.11		131048	0.1279	16250	582			0.27	No, Vu<V
SLV 12	10.65	1703	3109	-315.02		0	0	8333	0			0	No, Vu<V
SLV 11	8.55	-4692	2154	630.11		131048	0.1279	16250	582			0.27	No, Vu<V
SLV 11	10.65	1703	3109	-315.02		0	0	8333	0			0	No, Vu<V
SLV 9	8.55	110	-1958	-556.66		0	0	8333	0			0	No, Vu<V
SLV 9	10.65	-6381	-4574	507.89		78052	0.292	16250	1329			0.29	No, Vu<V
SLV 8	8.55	-4517	1902	559.32		101271	0.1593	16250	725			0.38	No, Vu<V
SLV 8	10.65	1121	2640	-262.43		0	0	8333	0			0	No, Vu<V

Verifica a pressoflessione fuori piano D.M. 17-01-18 (N.T.C.)

quota 10.3 Wa 0.05 denominatore 8 γM = 2

Comb.	fd	Sa	σ0	N	M	Mc	Coeff.s.	Verifica
SLV 12	143750	0.46	0	512	43.75	0	0	No, Trazione
SLV 11	143750	0.46	0	512	43.75	0	0	No, Trazione
SLV 7	143750	0.46	0	64	43.75	0	0	No, Trazione
SLV 8	143750	0.46	0	64	43.75	0	0	No, Trazione
SLV 15	143750	0.46	9690	-960	43.75	123.75	2.83	Si
SLV 16	143750	0.46	9690	-960	43.75	123.75	2.83	Si
SLV 4	143750	0.46	24761	-2453	43.75	273.85	6.26	Si
SLV 3	143750	0.46	24761	-2453	43.75	273.85	6.26	Si
SLV 14	143750	0.46	26946	-2670	43.75	291.33	6.66	Si
SLV 13	143750	0.46	26946	-2670	43.75	291.33	6.66	Si

Verifica dei meccanismi locali di collasso con analisi cinematica lineare

forza di aggancio al piano = 0 quota mezzeria = 10.3 Wa = 0.05 Ta = 0.0731

Comb.	N top	N base	V orto	α0	M*	e*	a0*	aLim	Verifica
SLV 3	-986	-2633	191	0	150.4	0.916	0	10.21601	No
SLV 2	-457	-1192	155	0	98.3	0.892	0	10.21601	No
SLV 1	-457	-1192	155	0	98.3	0.892	0	10.21601	No
SLV 5	92	285	16	0	0	0	0	9.02602	No, Trazione
SLV 4	-986	-2633	191	0	150.4	0.916	0	10.21601	No
SLV 6	92	285	16	0	0	0	0	9.02602	No, Trazione
SLV 10	33	110	-66	0	0	0	0	9.02602	No, Trazione
SLV 9	33	110	-66	0	0	0	0	9.02602	No, Trazione
SLV 8	-1674	-4517	137	0	219.7	0.938	0	9.02602	No
SLV 7	-1674	-4517	137	0	219.7	0.938	0	9.02602	No

Tabella dei coefficienti di sicurezza minimi

Stato limite	Coeff.s.	Comb.	Verifica
PF_SLU	1.717	SLU 77	Si
V_SLU	0.645	SLU 77	No
PF_SLV	0	SLV 12	No
V_SLV	0	SLV 1	No
PFFP_SLV	0	SLV 12	No
R_SLV	0	SLV 10	No

Maschio 181

Verifiche condotte secondo D.M. 17-01-18 (N.T.C.)

Dati geometrici

X ini.	Y ini.	X fin.	Y fin.	Quota i.	Quota.s	l	Sp.	h netta	h ini.	h fin.	a	a.s.,sx	a.s.,dx
-19.663	6.64	-17.793	6.64	L5	L6	1.87	0.28	3.5	3.5	3.5			

Caratteristiche del materiale

(Circolare 7 21-01-19 C8.5.I) Muratura in mattoni pieni e malta di calce LC2_Corti

fb	fk	fvk0	fmedio	τ0	fv0	μ	ϕ	fv,lim	E	G	FC
600000			345000	9000	20000	0.58	0.77	32500	320000000	128000000	1.2

Verifica a pressoflessione nel piano secondo D.M. 17-01-18 NTC §7.8.2.2.1 in combinazioni non sismiche, γM = 3

Comb.	Quota	N	M	σ0	Mu	c.s.	Verifica
SLU 78	9.45	-13803	-24.22	26365	8728.36	360.34	Si
SLU 78	11.35	-12181	960.91	23266	8135.69	8.467	Si
SLU 84	9.45	-13365	-58.53	25528	8579.64	146.573	Si
SLU 84	11.35	-11801	953.84	22539	7980.08	8.366	Si
SLU 82	9.45	-12817	-55.37	24481	8381.85	151.376	Si
SLU 82	11.35	-11239	907.59	21466	7738.61	8.527	Si
SLU 80	9.45	-13548	-35.1	25876	8642.63	246.255	Si
SLU 80	11.35	-11896	946.13	22721	8019.56	8.476	Si
SLU 77	9.45	-13822	-26.05	26399	8734.32	335.264	Si
SLU 77	11.35	-12196	957.11	23295	8141.86	8.507	Si
SLU 41	9.45	-11225	-89.22	21439	7732.28	86.669	Si
SLU 41	11.35	-10172	845.24	19428	7241.69	8.568	Si
SLU 42	9.45	-11207	-87.39	21405	7724.26	88.391	Si
SLU 42	11.35	-10156	849.04	19398	7234.16	8.52	Si
SLU 83	9.45	-13383	-60.36	25562	8585.95	142.236	Si
SLU 83	11.35	-11816	950.05	22569	7986.5	8.406	Si
SLU 79	9.45	-13566	-36.93	25911	8648.79	234.221	Si
SLU 79	11.35	-11911	942.33	22750	8025.92	8.517	Si
SLU 81	9.45	-12835	-57.2	24515	8388.59	146.652	Si
SLU 81	11.35	-11254	903.8	21496	7745.41	8.57	Si

Verifica a pressoflessione nel piano secondo D.M. 17-01-18 NTC §7.8.2.2.1 in combinazioni sismiche, γM = 2

Comb.	Quota	N	M	σ0	Mu	c.s.	Verifica
SLV 16	9.45	-10020	4017.57	19138	7900.45	1.966	Si
SLV 16	11.35	-2433	-2177.96	4648	2188.39	1.005	Si
SLV 4	9.45	-8748	-3191.69	16709	7060.34	2.212	Si
SLV 4	11.35	-11476	4048.42	21919	8804.52	2.175	Si
SLV 1	9.45	-7876	-3985.43	15044	6457.07	1.62	Si
SLV 1	11.35	-12582	3308.28	24032	9449.93	2.856	Si
SLV 2	9.45	-7876	-3985.43	15044	6457.07	1.62	Si
SLV 2	11.35	-12582	3308.28	24032	9449.93	2.856	Si
SLV 7	9.45	-10210	257.59	19501	8022.26	31.143	Si
SLV 7	11.35	-7020	2732.67	13409	5843.15	2.138	Si
SLV 8	9.45	-10210	257.59	19501	8022.26	31.143	Si
SLV 8	11.35	-7020	2732.67	13409	5843.15	2.138	Si
SLV 15	9.45	-10020	4017.57	19138	7900.45	1.966	Si
SLV 15	11.35	-2433	-2177.96	4648	2188.39	1.005	Si
SLV 3	9.45	-8748	-3191.69	16709	7060.34	2.212	Si
SLV 3	11.35	-11476	4048.42	21919	8804.52	2.175	Si
SLV 14	9.45	-9148	3223.83	17472	7329.58	2.274	Si
SLV 14	11.35	-3540	-2918.09	6761	3126.24	1.071	Si
SLV 13	9.45	-9148	3223.83	17472	7329.58	2.274	Si
SLV 13	11.35	-3540	-2918.09	6761	3126.24	1.071	Si

Verifica a taglio nel piano secondo D.M. 17-01-18 (N.T.C.) §7.8.2.2.2 con rottura per scorrimento in combinazioni non sismiche, γM = 3

Comb.	Quota	N	V par	M	σ0	σN	l'	fvd	Vt scorr.	Vt fess.diag.	Vt,lim	c.s.	Verifica
SLU 41	9.45	-11225	-887	-89.22		21439	1.8699	8414	4405			4.97	Si
SLU 41	11.35	-10172	-915	845.24		19428	1.8699	8146	4265			4.66	Si
SLU 83	9.45	-13383	-941	-60.36		25562	1.8699	8964	4693			4.99	Si
SLU 83	11.35	-11816	-972	950.05		22569	1.8699	8565	4484			4.61	Si
SLU 42	9.45	-11207	-891	-87.39		21405	1.8699	8410	4403			4.94	Si
SLU 42	11.35	-10156	-916	849.04		19398	1.8699	8142	4263			4.65	Si
SLU 78	9.45	-13803	-902	-24.22		26365	1.8699	9071	4749			5.27	Si
SLU 78	11.35	-12181	-930	960.91		23266	1.8699	8658	4533			4.87	Si
SLU 77	9.45	-13822	-898	-26.05		26399	1.8699	9075	4752			5.29	Si
SLU 77	11.35	-12196	-929	957.11		23295	1.8699	8662	4535			4.88	Si
SLU 39	9.45	-10677	-855	-86.05		20393	1.8699	8275	4332			5.07	Si
SLU 39	11.35	-9610	-881	798.99		18355	1.8699	8003	4190			4.76	Si
SLU 84	9.45	-13365	-945	-58.53		25528	1.8699	8959	4691			4.97	Si
SLU 84	11.35	-11801	-973	953.84		22539	1.8699	8561	4482			4.61	Si
SLU 40	9.45	-10659	-859	-84.22		20358	1.8699	8270	4330			5.04	Si
SLU 40	11.35	-9595	-881	802.79		18326	1.8699	7999	4188			4.75	Si
SLU 82	9.45	-12817	-913	-55.37		24481	1.8699	8820	4618			5.06	Si
SLU 82	11.35	-11239	-939	907.59		21466	1.8699	8418	4407			4.7	Si
SLU 81	9.45	-12835	-909	-57.2		24515	1.8699	8824	4620			5.08	Si
SLU 81	11.35	-11254	-938	903.8		21496	1.8699	8422	4409			4.7	Si

Verifica a taglio nel piano secondo D.M. 17-01-18 (N.T.C.) §7.8.2.2.2 con rottura per scorrimento in combinazioni sismiche, γM = 2

Comb.	Quota	N	V par	M	σ0	σN	l'	fvd	Vt scorr.	Vt fess.diag.	Vt,lim	c.s.	Verifica
SLV 15	9.45	-10020	6664	4017.57		22339	1.6019	12801	5742			0.86	No, Vu<V
SLV 15	11.35	-2433	5650	-2177.96		72693	0.1195	16250	544			0.1	No, Vu<V

Comb.	Quota	N	V par	M	σ0	σN	l'	fvd	Vt scorr.	Vt fess.diag.	Vt,lim	c.s.	Verifica
SLV 16	9.45	-10020	6664	4017.57		22339	1.6019	12801	5742			0.86	No, Vu<V
SLV 16	11.35	-2433	5650	-2177.96		72693	0.1195	16250	544			0.1	No, Vu<V
SLV 14	9.45	-9148	5998	3223.83		18695	1.7475	12072	5907			0.98	No, Vu<V
SLV 14	11.35	-3540	4622	-2918.09		38123	0.3316	15958	1482			0.32	No, Vu<V
SLV 6	9.45	-7304	-3644	-2388.23		14303	1.8239	11194	5717			1.57	Si
SLV 6	11.35	-10708	-3912	265.56		20453	1.8699	12424	6505			1.66	Si
SLV 5	9.45	-7304	-3644	-2388.23		14303	1.8239	11194	5717			1.57	Si
SLV 5	11.35	-10708	-3912	265.56		20453	1.8699	12424	6505			1.66	Si
SLV 1	9.45	-7876	-7640	-3985.43		21861	1.2868	12705	4578			0.6	No, Vu<V
SLV 1	11.35	-12582	-6661	3308.28		24032	1.8699	13140	6879			1.03	Si
SLV 3	9.45	-8748	-6973	-3191.69		18268	1.7102	11987	5740			0.82	No, Vu<V
SLV 3	11.35	-11476	-5632	4048.42		23468	1.7465	13027	6370			1.13	Si
SLV 2	9.45	-7876	-7640	-3985.43		21861	1.2868	12705	4578			0.6	No, Vu<V
SLV 2	11.35	-12582	-6661	3308.28		24032	1.8699	13140	6879			1.03	Si
SLV 13	9.45	-9148	5998	3223.83		18695	1.7475	12072	5907			0.98	No, Vu<V
SLV 13	11.35	-3540	4622	-2918.09		38123	0.3316	15958	1482			0.32	No, Vu<V
SLV 4	9.45	-8748	-6973	-3191.69		18268	1.7102	11987	5740			0.82	No, Vu<V
SLV 4	11.35	-11476	-5632	4048.42		23468	1.7465	13027	6370			1.13	Si

Verifica a pressoflessione fuori piano D.M. 17-01-18 (N.T.C.)

quota 10.3 Wa 0.05 denominatore 8 γM = 2

Comb.	fd	Sa	σ0	N	M	Mc	Coeff.s.	Verifica
SLV 14	143750	0.46	12538	-6564	225.94	824.69	3.65	Si
SLV 13	143750	0.46	12538	-6564	225.94	824.69	3.65	Si
SLV 16	143750	0.46	13347	-6988	225.94	871.46	3.86	Si
SLV 15	143750	0.46	13347	-6988	225.94	871.46	3.86	Si
SLV 9	143750	0.46	13786	-7218	225.94	896.51	3.97	Si
SLV 10	143750	0.46	13786	-7218	225.94	896.51	3.97	Si
SLV 6	143750	0.46	15666	-8202	225.94	1001.09	4.43	Si
SLV 5	143750	0.46	15666	-8202	225.94	1001.09	4.43	Si
SLV 11	143750	0.46	16485	-8631	225.94	1045.29	4.63	Si
SLV 12	143750	0.46	16485	-8631	225.94	1045.29	4.63	Si

Verifica dei meccanismi locali di collasso con analisi cinematica lineare

forza di aggancio al piano = 0 quota mezzeria = 10.3 Wa = 0.05 Ta = 0.0731

Comb.	N top	N base	V orto	α0	M*	e*	a0*	aLim	Verifica
SLV 8	-3312	-11173	286	0	606.6	0.9	0	9.02602	No
SLV 12	-2709	-10366	308	0	547.9	0.895	0	9.02602	No
SLV 11	-2709	-10366	308	0	547.9	0.895	0	9.02602	No
SLV 7	-3312	-11173	286	0	606.6	0.9	0	9.02602	No
SLV 6	-9020	-7355	-308	0.017	1178.7	0.939	0.26756	9.02602	No
SLV 5	-9020	-7355	-308	0.017	1178.7	0.939	0.26756	9.02602	No
SLV 10	-8416	-6548	-287	0.018	1117.6	0.936	0.28083	9.02602	No
SLV 9	-8416	-6548	-287	0.018	1117.6	0.936	0.28083	9.02602	No
SLV 15	-4002	-8087	125	0.029	674.5	0.906	0.47253	10.21601	No
SLV 16	-4002	-8087	125	0.029	674.5	0.906	0.47253	10.21601	No

Tabella dei coefficienti di sicurezza minimi

Stato limite	Coeff.s.	Comb.	Verifica
PF_SLU	8.366	SLU 84	Si
V_SLU	4.606	SLU 84	Si
PF_SLV	1.005	SLV 15	Si
V_SLV	0.096	SLV 15	No
PFFP_SLV	3.65	SLV 13	Si
R_SLV	0	SLV 7	No

Maschio 182

Verifiche condotte secondo D.M. 17-01-18 (N.T.C.)

Dati geometrici

X ini.	Y ini.	X fin.	Y fin.	Quota i.	Quota.s	l	Sp.	h netta	h ini.	h fin.	a	a.s.,sx	a.s.,dx
-16.793	6.64	-12.868	6.64	L5	L6	3.925	0.28	3.5	3.5	3.5			

Caratteristiche del materiale

(Circolare 7 21-01-19 C8.5.I) Muratura in mattoni pieni e malta di calce LC2_Corti

fb	fk	fvk0	fmedio	τ0	fv0	μ	ϕ	fv,lim	E	G	FC
600000			345000	9000	20000	0.58	0.77	32500	320000000	128000000	1.2

Verifica a pressoflessione nel piano secondo D.M. 17-01-18 NTC §7.8.2.2.1 in combinazioni non sismiche, γM = 3

Comb.	Quota	N	M	σ0	Mu	c.s.	Verifica
SLU 41	9.45	-22098	390.77	20107	32662.15	83.584	Si
SLU 41	11.35	-19656	-890.57	17885	30105.38	33.805	Si
SLU 81	9.45	-25028	393.5	22774	35385.95	89.926	Si
SLU 81	11.35	-21542	-992.41	19602	32103.61	32.349	Si
SLU 40	9.45	-20886	429.76	19005	31426.32	73.125	Si
SLU 40	11.35	-18357	-918.53	16703	28638.44	31.178	Si
SLU 39	9.45	-20876	418.17	18996	31415.91	75.126	Si
SLU 39	11.35	-18350	-924.76	16697	28630.64	30.96	Si
SLU 18	9.45	-18736	296.96	17048	29073.84	97.906	Si
SLU 18	11.35	-16067	-748.33	14620	25873.01	34.574	Si
SLU 83	9.45	-26250	366.1	23885	36409.87	99.453	Si
SLU 83	11.35	-22848	-958.21	20790	33395.59	34.852	Si
SLU 19	9.45	-18746	308.55	17057	29085.19	94.265	Si
SLU 19	11.35	-16074	-742.1	14626	25881.48	34.876	Si
SLU 42	9.45	-22108	402.36	20116	32672.03	81.2	Si

Comb.	Quota	N	M	σ0	Mu	c.s.	Verifica
SLU 42	11.35	-19663	-884.34	17892	30112.79	34.051	Si
SLU 82	9.45	-25038	405.09	22783	35394.55	87.374	Si
SLU 82	11.35	-21549	-986.17	19608	32110.47	32.561	Si
SLU 31	9.45	-20158	365.29	18342	30652.4	83.912	Si
SLU 31	11.35	-17516	-818.01	15938	27649.4	33.801	Si

Verifica a pressoflessione nel piano secondo D.M. 17-01-18 NTC §7.8.2.2.1 in combinazioni sismiche, γM = 2

Comb.	Quota	N	M	σ0	Mu	c.s.	Verifica
SLV 9	9.45	-12321	4512.4	11211	21961.27	4.867	Si
SLV 9	11.35	-13235	-6277.21	12043	23414.21	3.73	Si
SLV 15	9.45	-16842	11589.18	15325	28907.26	2.494	Si
SLV 15	11.35	-14263	-13420.95	12978	25017.28	1.864	Si
SLV 1	9.45	-17933	-11311.06	16318	30494.13	2.696	Si
SLV 1	11.35	-14668	12337.43	13347	25641.55	2.078	Si
SLV 4	9.45	-20632	-11827.56	18774	34269.7	2.897	Si
SLV 4	11.35	-15311	13367.72	13932	26622.54	1.992	Si
SLV 3	9.45	-20632	-11827.56	18774	34269.7	2.897	Si
SLV 3	11.35	-15311	13367.72	13932	26622.54	1.992	Si
SLV 13	9.45	-14143	12105.68	12869	24832.69	2.051	Si
SLV 13	11.35	-13619	-14451.24	12392	24016.56	1.662	Si
SLV 16	9.45	-16842	11589.18	15325	28907.26	2.494	Si
SLV 16	11.35	-14263	-13420.95	12978	25017.28	1.864	Si
SLV 10	9.45	-12321	4512.4	11211	21961.27	4.867	Si
SLV 10	11.35	-13235	-6277.21	12043	23414.21	3.73	Si
SLV 2	9.45	-17933	-11311.06	16318	30494.13	2.696	Si
SLV 2	11.35	-14668	12337.43	13347	25641.55	2.078	Si
SLV 14	9.45	-14143	12105.68	12869	24832.69	2.051	Si
SLV 14	11.35	-13619	-14451.24	12392	24016.56	1.662	Si

Verifica a taglio nel piano secondo D.M. 17-01-18 (N.T.C.) §7.8.2.2.2 con rottura per scorrimento in combinazioni non sismiche, γM = 3

Comb.	Quota	N	V par	M	σ0	σN	l'	fvd	Vt scorr.	Vt fess.diag.	Vt,lim	c.s.	Verifica
SLU 84	9.45	-26260	543	377.69		23894	3.925	8741	9607			17.68	Si
SLU 84	11.35	-22855	543	-951.98		20796	3.925	8328	9153			16.84	Si
SLU 31	9.45	-20158	502	365.29		18342	3.925	8001	8793			17.52	Si
SLU 31	11.35	-17516	502	-818.01		15938	3.925	7681	8441			16.82	Si
SLU 42	9.45	-22108	538	402.36		20116	3.925	8238	9053			16.84	Si
SLU 42	11.35	-19663	538	-884.34		17892	3.925	7941	8727			16.23	Si
SLU 40	9.45	-20886	578	429.76		19005	3.925	8090	8890			15.38	Si
SLU 40	11.35	-18357	578	-918.53		16703	3.925	7783	8553			14.79	Si
SLU 73	9.45	-24310	508	340.62		22120	3.925	8505	9347			18.41	Si
SLU 73	11.35	-20708	508	-885.65		18843	3.925	8068	8867			17.46	Si
SLU 41	9.45	-22098	535	390.77		20107	3.925	8237	9052			16.93	Si
SLU 41	11.35	-19656	535	-890.57		17885	3.925	7940	8726			16.32	Si
SLU 83	9.45	-26250	540	366.1		23885	3.925	8740	9606			17.78	Si
SLU 83	11.35	-22848	540	-958.21		20790	3.925	8328	9152			16.94	Si
SLU 81	9.45	-25028	581	393.5		22774	3.925	8592	9443			16.26	Si
SLU 81	11.35	-21542	581	-992.41		19602	3.925	8169	8978			15.46	Si
SLU 82	9.45	-25038	584	405.09		22783	3.925	8593	9444			16.18	Si
SLU 82	11.35	-21549	584	-986.17		19608	3.925	8170	8979			15.38	Si
SLU 39	9.45	-20876	575	418.17		18996	3.925	8088	8889			15.46	Si
SLU 39	11.35	-18350	575	-924.76		16697	3.925	7782	8552			14.87	Si

Verifica a taglio nel piano secondo D.M. 17-01-18 (N.T.C.) §7.8.2.2.2 con rottura per scorrimento in combinazioni sismiche, γM = 2

Comb.	Quota	N	V par	M	σ0	σN	l'	fvd	Vt scorr.	Vt fess.diag.	Vt,lim	c.s.	Verifica
SLV 1	9.45	-17933	-13125	-11311.06		16318	3.925	11597	12745			0.97	No, Vu<V
SLV 1	11.35	-14668	-11443	12337.43		15572	3.3642	11448	10783			0.94	No, Vu<V
SLV 15	9.45	-16842	13660	11589.18		15733	3.8232	11480	12289			0.9	No, Vu<V
SLV 15	11.35	-14263	11979	-13420.95		16622	3.0645	11658	10003			0.84	No, Vu<V
SLV 14	9.45	-14143	14658	12105.68		15216	3.3197	11376	10575			0.72	No, Vu<V
SLV 14	11.35	-13619	12170	-14451.24		17987	2.7042	11931	9034			0.74	No, Vu<V
SLV 4	9.45	-20632	-14123	-11827.56		18774	3.925	12088	13285			0.94	No, Vu<V
SLV 4	11.35	-15311	-11634	13367.72		16731	3.2683	11680	10688			0.92	No, Vu<V
SLV 3	9.45	-20632	-14123	-11827.56		18774	3.925	12088	13285			0.94	No, Vu<V
SLV 3	11.35	-15311	-11634	13367.72		16731	3.2683	11680	10688			0.92	No, Vu<V
SLV 16	9.45	-16842	13660	11589.18		15733	3.8232	11480	12289			0.9	No, Vu<V
SLV 16	11.35	-14263	11979	-13420.95		16622	3.0645	11658	10003			0.84	No, Vu<V
SLV 2	9.45	-17933	-13125	-11311.06		16318	3.925	11597	12745			0.97	No, Vu<V
SLV 2	11.35	-14668	-11443	12337.43		15572	3.3642	11448	10783			0.94	No, Vu<V
SLV 13	9.45	-14143	14658	12105.68		15216	3.3197	11376	10575			0.72	No, Vu<V
SLV 13	11.35	-13619	12170	-14451.24		17987	2.7042	11931	9034			0.74	No, Vu<V
SLV 9	9.45	-12321	6098	4512.4		11211	3.925	10576	11623			1.91	Si
SLV 9	11.35	-13235	4129	-6277.21		12043	3.925	10742	11805			2.86	Si
SLV 10	9.45	-12321	6098	4512.4		11211	3.925	10576	11623			1.91	Si
SLV 10	11.35	-13235	4129	-6277.21		12043	3.925	10742	11805			2.86	Si

Verifica a pressoflessione fuori piano D.M. 17-01-18 (N.T.C.)

quota 10.3 Wa 0.05 denominatore 8 γM = 2

Comb.	fd	Sa	σ0	N	M	Mc	Coeff.s.	Verifica
SLV 10	143750	0.46	11614	-12764	474.28	1617.07	3.41	Si
SLV 9	143750	0.46	11614	-12764	474.28	1617.07	3.41	Si
SLV 6	143750	0.46	12361	-13585	474.28	1709.45	3.6	Si
SLV 5	143750	0.46	12361	-13585	474.28	1709.45	3.6	Si
SLV 14	143750	0.46	12674	-13929	474.28	1747.76	3.69	Si
SLV 13	143750	0.46	12674	-13929	474.28	1747.76	3.69	Si
SLV 16	143750	0.46	14330	-15748	474.28	1946.2	4.1	Si
SLV 15	143750	0.46	14330	-15748	474.28	1946.2	4.1	Si
SLV 1	143750	0.46	15164	-16665	474.28	2043.58	4.31	Si
SLV 2	143750	0.46	15164	-16665	474.28	2043.58	4.31	Si

Verifica dei meccanismi locali di collasso con analisi cinematica lineare

forza di aggancio al piano = 0 quota mezzeria = 10.3 Wa = 0.05 Ta = 0.0731

Comb.	N top	N base	V orto	α0	M*	e*	a0*	aLim	Verifica
SLV 9	-9982	-11942	-396	0.021	1572.9	0.913	0.332	9.02602	No
SLV 10	-9982	-11942	-396	0.021	1572.9	0.913	0.332	9.02602	No
SLV 6	-10375	-12987	-392	0.022	1612.2	0.914	0.34426	9.02602	No
SLV 5	-10375	-12987	-392	0.022	1612.2	0.914	0.34426	9.02602	No
SLV 11	-12640	-20502	389	0.024	1839.1	0.922	0.38495	9.02602	No
SLV 12	-12640	-20502	389	0.024	1839.1	0.922	0.38495	9.02602	No
SLV 8	-13034	-21547	393	0.025	1878.7	0.923	0.38685	9.02602	No
SLV 7	-13034	-21547	393	0.025	1878.7	0.923	0.38685	9.02602	No
SLV 4	-12563	-19771	122	0.041	1831.3	0.922	0.64653	10.21601	No
SLV 3	-12563	-19771	122	0.041	1831.3	0.922	0.64653	10.21601	No

Tabella dei coefficienti di sicurezza minimi

Stato limite	Coeff.s.	Comb.	Verifica
PF_SLU	30.96	SLU 39	Si
V_SLU	14.794	SLU 40	Si
PF_SLV	1.662	SLV 13	Si
V_SLV	0.721	SLV 13	No
PFFP_SLV	3.41	SLV 9	Si
R_SLV	0.037	SLV 9	No

Maschio 183

Verifiche condotte secondo D.M. 17-01-18 (N.T.C.)

Dati geometrici

X ini.	Y ini.	X fin.	Y fin.	Quota i.	Quota.s	l	Sp.	h netta	h ini.	h fin.	a	a.s.,sx	a.s.,dx
-11.868	6.64	-7.943	6.64	L5	L6	3.925	0.28	3.5	3.5	3.5			

Caratteristiche del materiale

(Circolare 7 21-01-19 C8.5.I) Muratura in mattoni pieni e malta di calce LC2_Corti

fb	fk	fvk0	fmedio	τ0	fv0	μ	ϕ	fv,lim	E	G	FC
600000			345000	9000	20000	0.58	0.77	32500	320000000	128000000	1.2

Verifica a pressoflessione nel piano secondo D.M. 17-01-18 NTC §7.8.2.2.1 in combinazioni non sismiche, γM = 3

Comb.	Quota	N	M	σ0	Mu	c.s.	Verifica
SLU 42	9.45	-22495	-453.71	20468	33053.04	72.851	Si
SLU 42	11.35	-20316	141.78	18486	30822.07	217.399	Si
SLU 83	9.45	-26714	-469.1	24308	36782.12	78.41	Si
SLU 83	11.35	-23622	130.18	21494	34125.77	262.137	Si
SLU 82	9.45	-25571	-487.46	23267	35848.55	73.541	Si
SLU 82	11.35	-22390	278.57	20373	32950.56	118.284	Si
SLU 84	9.45	-26729	-469.56	24321	36793.69	78.359	Si
SLU 84	11.35	-23635	123.18	21506	34137.8	277.129	Si
SLU 40	9.45	-21336	-471.62	19414	31892.88	67.625	Si
SLU 40	11.35	-19071	297.16	17353	29453.65	99.116	Si
SLU 81	9.45	-25556	-487.01	23254	35836.24	73.584	Si
SLU 81	11.35	-22377	285.57	20361	32937.82	115.341	Si
SLU 19	9.45	-19157	-369.41	17432	29550.78	79.994	Si
SLU 19	11.35	-16720	224.91	15214	26684.19	118.644	Si
SLU 41	9.45	-22480	-453.26	20455	33038.76	72.892	Si
SLU 41	11.35	-20303	148.78	18474	30808.14	207.078	Si
SLU 31	9.45	-20585	-412.12	18730	31108.46	75.485	Si
SLU 31	11.35	-18193	229.1	16554	28447.53	124.168	Si
SLU 39	9.45	-21322	-471.16	19401	31877.86	67.658	Si
SLU 39	11.35	-19058	304.16	17341	29439.02	96.787	Si

Verifica a pressoflessione nel piano secondo D.M. 17-01-18 NTC §7.8.2.2.1 in combinazioni sismiche, γM = 2

Comb.	Quota	N	M	σ0	Mu	c.s.	Verifica
SLV 6	9.45	-12592	-4062.4	11458	22395.33	5.513	Si
SLV 6	11.35	-13571	5589.87	12349	23942.04	4.283	Si
SLV 1	9.45	-14568	-11151.49	13255	25487.48	2.286	Si
SLV 1	11.35	-13794	13550.89	12552	24290.69	1.793	Si
SLV 2	9.45	-14568	-11151.49	13255	25487.48	2.286	Si
SLV 2	11.35	-13794	13550.89	12552	24290.69	1.793	Si
SLV 3	9.45	-17332	-10788.95	15770	29623.25	2.746	Si
SLV 3	11.35	-14504	12584.2	13198	25389.96	2.018	Si
SLV 4	9.45	-17332	-10788.95	15770	29623.25	2.746	Si
SLV 4	11.35	-14504	12584.2	13198	25389.96	2.018	Si
SLV 14	9.45	-18138	10311.57	16504	30787.46	2.986	Si
SLV 14	11.35	-15523	-12417.19	14124	26941.78	2.17	Si
SLV 5	9.45	-12592	-4062.4	11458	22395.33	5.513	Si
SLV 5	11.35	-13571	5589.87	12349	23942.04	4.283	Si
SLV 13	9.45	-18138	10311.57	16504	30787.46	2.986	Si
SLV 13	11.35	-15523	-12417.19	14124	26941.78	2.17	Si
SLV 16	9.45	-20902	10674.12	19019	34634.8	3.245	Si
SLV 16	11.35	-16232	-13383.88	14770	28005.2	2.092	Si
SLV 15	9.45	-20902	10674.12	19019	34634.8	3.245	Si
SLV 15	11.35	-16232	-13383.88	14770	28005.2	2.092	Si

Verifica a taglio nel piano secondo D.M. 17-01-18 (N.T.C.) §7.8.2.2.2 con rottura per scorrimento in combinazioni non sismiche, γM = 3

Comb.	Quota	N	V par	M	σ0	σN	l'	fvd	Vt scorr.	Vt fess.diag.	Vt,lim	c.s.	Verifica
SLU 49	9.45	-23682	208	-132.14		21549	3.925	8429	9263			44.6	Si
SLU 49	11.35	-20097	208	-258.93		18287	3.925	7994	8785			42.24	Si

Comb.	Quota	N	V par	M	σ0	σN	l'	fvd	Vt scorr.	Vt fess.diag.	Vt,lim	c.s.	Verifica
SLU 81	9.45	-25556	-220	-487.01		23254	3.925	8656	9513			43.27	Si
SLU 81	11.35	-22377	-220	285.57		20361	3.925	8270	9089			41.4	Si
SLU 40	9.45	-21336	-240	-471.62		19414	3.925	8144	8950			37.23	Si
SLU 40	11.35	-19071	-240	297.16		17353	3.925	7869	8648			36.02	Si
SLU 51	9.45	-23170	227	-150.1		21083	3.925	8367	9195			40.5	Si
SLU 51	11.35	-19573	227	-315.77		17809	3.925	7930	8715			38.34	Si
SLU 48	9.45	-23668	204	-131.68		21536	3.925	8427	9261			45.3	Si
SLU 48	11.35	-20084	205	-251.94		18275	3.925	7992	8783			42.91	Si
SLU 39	9.45	-21322	-244	-471.16		19401	3.925	8142	8948			36.72	Si
SLU 39	11.35	-19058	-243	304.16		17341	3.925	7868	8647			35.53	Si
SLU 8	9.45	-18921	200	-133.81		17217	3.925	7851	8628			43.15	Si
SLU 8	11.35	-16241	200	-290.17		14778	3.925	7526	8271			41.33	Si
SLU 50	9.45	-23155	224	-149.65		21069	3.925	8365	9193			41.09	Si
SLU 50	11.35	-19560	224	-308.77		17798	3.925	7929	8713			38.9	Si
SLU 82	9.45	-25571	-217	-487.46		23267	3.925	8658	9515			43.93	Si
SLU 82	11.35	-22390	-216	278.57		20373	3.925	8272	9091			42.04	Si
SLU 9	9.45	-18936	203	-134.26		17230	3.925	7853	8630			42.47	Si
SLU 9	11.35	-16254	203	-297.17		14789	3.925	7527	8273			40.66	Si

Verifica a taglio nel piano secondo D.M. 17-01-18 (N.T.C.) §7.8.2.2.2 con rottura per scorrimento in combinazioni sismiche, γM = 2

Comb.	Quota	N	V par	M	σ0	σN	l'	fvd	Vt scorr.	Vt fess.diag.	Vt,lim	c.s.	Verifica
SLV 4	9.45	-17332	-13329	-10788.95		15770	3.925	11487	12625			0.95	No, Vu<V
SLV 4	11.35	-14504	-11214	12584.2		15771	3.2846	11487	10565			0.94	No, Vu<V
SLV 2	9.45	-14568	-13105	-11151.49		14488	3.591	11231	11293			0.86	No, Vu<V
SLV 2	11.35	-13794	-11110	13550.89		16754	2.9405	11684	9620			0.87	No, Vu<V
SLV 14	9.45	-18138	13221	10311.57		16504	3.925	11634	12786			0.97	No, Vu<V
SLV 14	11.35	-15523	11106	-12417.19		15895	3.4877	11512	11242			1.01	Si
SLV 3	9.45	-17332	-13329	-10788.95		15770	3.925	11487	12625			0.95	No, Vu<V
SLV 3	11.35	-14504	-11214	12584.2		15771	3.2846	11487	10565			0.94	No, Vu<V
SLV 16	9.45	-20902	12997	10674.12		19019	3.925	12137	13339			1.03	Si
SLV 16	11.35	-16232	11002	-13383.88		16981	3.4139	11730	11212			1.02	Si
SLV 9	9.45	-13664	4268	2376.52		12433	3.925	10820	11891			2.79	Si
SLV 9	11.35	-14090	3452	-2200.56		12821	3.925	10897	11976			3.47	Si
SLV 1	9.45	-14568	-13105	-11151.49		14488	3.591	11231	11293			0.86	No, Vu<V
SLV 1	11.35	-13794	-11110	13550.89		16754	2.9405	11684	9620			0.87	No, Vu<V
SLV 15	9.45	-20902	12997	10674.12		19019	3.925	12137	13339			1.03	Si
SLV 15	11.35	-16232	11002	-13383.88		16981	3.4139	11730	11212			1.02	Si
SLV 13	9.45	-18138	13221	10311.57		16504	3.925	11634	12786			0.97	No, Vu<V
SLV 13	11.35	-15523	11106	-12417.19		15895	3.4877	11512	11242			1.01	Si
SLV 10	9.45	-13664	4268	2376.52		12433	3.925	10820	11891			2.79	Si
SLV 10	11.35	-14090	3452	-2200.56		12821	3.925	10897	11976			3.47	Si

Verifica a pressoflessione fuori piano D.M. 17-01-18 (N.T.C.)

quota 10.3 Wa 0.05 denominatore 8 γM = 2

Comb.	fd	Sa	σ0	N	M	Mc	Coeff.s.	Verifica
SLV 5	143750	0.46	11846	-13019	474.28	1645.91	3.47	Si
SLV 6	143750	0.46	11846	-13019	474.28	1645.91	3.47	Si
SLV 10	143750	0.46	12616	-13865	474.28	1740.7	3.67	Si
SLV 9	143750	0.46	12616	-13865	474.28	1740.7	3.67	Si
SLV 2	143750	0.46	12985	-14270	474.28	1785.53	3.76	Si
SLV 1	143750	0.46	12985	-14270	474.28	1785.53	3.76	Si
SLV 3	143750	0.46	14731	-16190	474.28	1993.28	4.2	Si
SLV 4	143750	0.46	14731	-16190	474.28	1993.28	4.2	Si
SLV 14	143750	0.46	15552	-17092	474.28	2088.3	4.4	Si
SLV 13	143750	0.46	15552	-17092	474.28	2088.3	4.4	Si

Verifica dei meccanismi locali di collasso con analisi cinematica lineare

forza di aggancio al piano = 0 quota mezzeria = 10.3 Wa = 0.05 Ta = 0.0731

Comb.	N top	N base	V orto	α0	M*	e*	a0*	aLim	Verifica
SLV 5	-10017	-12131	-163	0.038	1576.4	0.913	0.60794	9.02602	No
SLV 6	-10017	-12131	-163	0.038	1576.4	0.913	0.60794	9.02602	No
SLV 11	-13372	-22646	159	0.039	1912.6	0.924	0.60921	9.02602	No
SLV 12	-13372	-22646	159	0.039	1912.6	0.924	0.60921	9.02602	No
SLV 10	-10463	-13445	-159	0.039	1620.9	0.915	0.61194	9.02602	No
SLV 9	-10463	-13445	-159	0.039	1620.9	0.915	0.61194	9.02602	No
SLV 8	-12926	-21333	156	0.039	1867.8	0.923	0.61314	9.02602	No
SLV 7	-12926	-21333	156	0.039	1867.8	0.923	0.61314	9.02602	No
SLV 16	-12874	-20958	52	0.045	1862.6	0.923	0.71302	10.21601	No
SLV 15	-12874	-20958	52	0.045	1862.6	0.923	0.71302	10.21601	No

Tabella dei coefficienti di sicurezza minimi

Stato limite	Coeff.s.	Comb.	Verifica
PF_SLU	67.625	SLU 40	Si
V_SLU	35.527	SLU 39	Si
PF_SLV	1.793	SLV 1	Si
V_SLV	0.862	SLV 1	No
PFFP_SLV	3.47	SLV 5	Si
R_SLV	0.067	SLV 5	No

Maschio 184

Verifiche condotte secondo D.M. 17-01-18 (N.T.C.)

Dati geometrici

X ini.	Y ini.	X fin.	Y fin.	Quota i.	Quota.s	l	Sp.	h netta	h ini.	h fin.	a	a.s.,sx	a.s.,dx
-6.943	6.64	-5.088	6.64	L5	L6	1.855	0.28	3.5	3.5	3.5			

Caratteristiche del materiale

(Circolare 7 21-01-19 C8.5.I) Muratura in mattoni pieni e malta di calce LC2_Corti

fb	fk	fvk0	fmedio	τ0	fv0	μ	ϕ	fv,lim	E	G	FC
600000			345000	9000	20000	0.58	0.77	32500	320000000	128000000	1.2

Verifica a pressoflessione nel piano secondo D.M. 17-01-18 NTC §7.8.2.2.1 in combinazioni non sismiche, γM = 3

Comb.	Quota	N	M	σ0	Mu	c.s.	Verifica
SLU 80	9.45	-11550	-278.89	22233	7790.59	27.934	Si
SLU 80	11.35	-10467	-855.13	20148	7308.54	8.547	Si
SLU 42	9.45	-9616	-184.68	18509	6893.5	37.326	Si
SLU 42	11.35	-8974	-791.27	17274	6559.73	8.29	Si
SLU 37	9.45	-9658	-180.83	18591	6914.9	38.239	Si
SLU 37	11.35	-8989	-796.68	17302	6567.57	8.244	Si
SLU 78	9.45	-11841	-297.05	22793	7911.21	26.633	Si
SLU 78	11.35	-10788	-862.6	20765	7456.57	8.644	Si
SLU 38	9.45	-9655	-182.16	18584	6913.23	37.95	Si
SLU 38	11.35	-8985	-799.11	17295	6565.51	8.216	Si
SLU 36	9.45	-9945	-200.32	19144	7058.01	35.234	Si
SLU 36	11.35	-9305	-806.58	17912	6734.38	8.349	Si
SLU 35	9.45	-9949	-198.99	19150	7059.64	35.478	Si
SLU 35	11.35	-9309	-804.15	17919	6736.38	8.377	Si
SLU 41	9.45	-9619	-183.35	18515	6895.18	37.607	Si
SLU 41	11.35	-8978	-788.84	17281	6561.79	8.318	Si
SLU 84	9.45	-11511	-281.41	22158	7774.1	27.626	Si
SLU 84	11.35	-10456	-847.29	20127	7303.46	8.62	Si
SLU 79	9.45	-11554	-277.56	22239	7791.99	28.073	Si
SLU 79	11.35	-10471	-852.7	20155	7310.34	8.573	Si

Verifica a pressoflessione nel piano secondo D.M. 17-01-18 NTC §7.8.2.2.1 in combinazioni sismiche, γM = 2

Comb.	Quota	N	M	σ0	Mu	c.s.	Verifica
SLV 16	9.45	-7258	2892.28	13970	5963.08	2.062	Si
SLV 16	11.35	-7703	-4379.54	14828	6278.97	1.434	Si
SLV 12	9.45	-8915	-510.91	17161	7109.18	13.915	Si
SLV 12	11.35	-3469	-1982.47	6678	3042.4	1.535	Si
SLV 13	9.45	-6411	3675.84	12340	5346.43	1.454	Si
SLV 13	11.35	-10038	-4140.99	19322	7839.76	1.893	Si
SLV 15	9.45	-7258	2892.28	13970	5963.08	2.062	Si
SLV 15	11.35	-7703	-4379.54	14828	6278.97	1.434	Si
SLV 2	9.45	-8323	-3435.68	16022	6709.09	1.953	Si
SLV 2	11.35	-5724	3502.9	11019	4831.66	1.379	Si
SLV 1	9.45	-8323	-3435.68	16022	6709.09	1.953	Si
SLV 1	11.35	-5724	3502.9	11019	4831.66	1.379	Si
SLV 11	9.45	-8915	-510.91	17161	7109.18	13.915	Si
SLV 11	11.35	-3469	-1982.47	6678	3042.4	1.535	Si
SLV 3	9.45	-9170	-4219.24	17652	7278.38	1.725	Si
SLV 3	11.35	-3389	3264.35	0	0	0	No, e>l/2
SLV 4	9.45	-9170	-4219.24	17652	7278.38	1.725	Si
SLV 4	11.35	-3389	3264.35	0	0	0	No, e>l/2
SLV 14	9.45	-6411	3675.84	12340	5346.43	1.454	Si
SLV 14	11.35	-10038	-4140.99	19322	7839.76	1.893	Si

Verifica a taglio nel piano secondo D.M. 17-01-18 (N.T.C.) §7.8.2.2.2 con rottura per scorrimento in combinazioni non sismiche, γM = 3

Comb.	Quota	N	V par	M	σ0	σN	l'	fvd	Vt scorr.	Vt fess.diag.	Vt,lim	c.s.	Verifica
SLU 35	9.45	-9949	909	-198.99		19150	1.8554	8109	4213			4.63	Si
SLU 35	11.35	-9309	931	-804.15		17919	1.8554	7945	4127			4.43	Si
SLU 84	9.45	-11511	950	-281.41		22158	1.8554	8510	4421			4.66	Si
SLU 84	11.35	-10456	974	-847.29		20127	1.8554	8239	4280			4.39	Si
SLU 42	9.45	-9616	909	-184.68		18509	1.8554	8023	4168			4.59	Si
SLU 42	11.35	-8974	931	-791.27		17274	1.8554	7859	4083			4.39	Si
SLU 38	9.45	-9655	901	-182.16		18584	1.8554	8033	4173			4.63	Si
SLU 38	11.35	-8985	922	-799.11		17295	1.8554	7862	4084			4.43	Si
SLU 37	9.45	-9658	900	-180.83		18591	1.8554	8034	4174			4.64	Si
SLU 37	11.35	-8989	922	-796.68		17302	1.8554	7863	4085			4.43	Si
SLU 79	9.45	-11554	941	-277.56		22239	1.8554	8521	4427			4.7	Si
SLU 79	11.35	-10471	965	-852.7		20155	1.8554	8243	4282			4.44	Si
SLU 36	9.45	-9945	910	-200.32		19144	1.8554	8108	4212			4.63	Si
SLU 36	11.35	-9305	931	-806.58		17912	1.8554	7944	4127			4.43	Si
SLU 41	9.45	-9619	907	-183.35		18515	1.8554	8024	4169			4.59	Si
SLU 41	11.35	-8978	931	-788.84		17281	1.8554	7860	4083			4.39	Si
SLU 83	9.45	-11515	948	-280.08		22164	1.8554	8511	4421			4.66	Si
SLU 83	11.35	-10460	974	-844.87		20135	1.8554	8240	4281			4.39	Si
SLU 80	9.45	-11550	942	-278.89		22233	1.8554	8520	4426			4.7	Si
SLU 80	11.35	-10467	965	-855.13		20148	1.8554	8242	4282			4.44	Si

Verifica a taglio nel piano secondo D.M. 17-01-18 (N.T.C.) §7.8.2.2.2 con rottura per scorrimento in combinazioni sismiche, γM = 2

Comb.	Quota	N	V par	M	σ0	σN	l'	fvd	Vt scorr.	Vt fess.diag.	Vt,lim	c.s.	Verifica
SLV 3	9.45	-9170	-5776	-4219.24		23347	1.4028	13003	5107			0.88	No, Vu<V
SLV 3	11.35	-3389	-4768	3264.35		0	0	8333	0			0	No, Vu<V
SLV 9	9.45	-6092	2932	2100.96		12443	1.7484	10822	5298			1.81	Si
SLV 9	11.35	-11253	2755	-1187.33		21660	1.8554	12665	6580			2.39	Si
SLV 13	9.45	-6411	6693	3675.84		21540	1.0629	12641	3762			0.56	No, Vu<V
SLV 13	11.35	-10038	5716	-4140.99		23196	1.5455	12973	5614			0.98	No, Vu<V
SLV 16	9.45	-7258	6296	2892.28		16327	1.5875	11599	5156			0.82	No, Vu<V
SLV 16	11.35	-7703	5249	-4379.54		25533	1.0775	13440	4055			0.77	No, Vu<V
SLV 14	9.45	-6411	6693	3675.84		21540	1.0629	12641	3762			0.56	No, Vu<V
SLV 14	11.35	-10038	5716	-4140.99		23196	1.5455	12973	5614			0.98	No, Vu<V
SLV 2	9.45	-8323	-5379	-3435.68		19243	1.5448	12182	5269			0.98	No, Vu<V
SLV 2	11.35	-5724	-4301	3502.9		21581	0.9473	12650	3355			0.78	No, Vu<V
SLV 1	9.45	-8323	-5379	-3435.68		19243	1.5448	12182	5269			0.98	No, Vu<V

Comb.	Quota	N	V par	M	σ0	σN	l'	fvd	Vt scorr.	Vt fess.diag.	Vt,lim	c.s.	Verifica
SLV 1	11.35	-5724	-4301	3502.9		21581	0.9473	12650	3355			0.78	No, Vu<V
SLV 10	9.45	-6092	2932	2100.96		12443	1.7484	10822	5298			1.81	Si
SLV 10	11.35	-11253	2755	-1187.33		21660	1.8554	12665	6580			2.39	Si
SLV 4	9.45	-9170	-5776	-4219.24		23347	1.4028	13003	5107			0.88	No, Vu<V
SLV 4	11.35	-3389	-4768	3264.35		0	0	8333	0			0	No, Vu<V
SLV 15	9.45	-7258	6296	2892.28		16327	1.5875	11599	5156			0.82	No, Vu<V
SLV 15	11.35	-7703	5249	-4379.54		25533	1.0775	13440	4055			0.77	No, Vu<V

Verifica a pressoflessione fuori piano D.M. 17-01-18 (N.T.C.)

quota 10.3 Wa 0.05 denominatore 8 γM = 2

Comb.	fd	Sa	σ0	N	M	Mc	Coeff.s.	Verifica
SLV 7	143750	0.46	9946	-5167	224.2	664.53	2.96	Si
SLV 8	143750	0.46	9946	-5167	224.2	664.53	2.96	Si
SLV 3	143750	0.46	10694	-5556	224.2	709.75	3.17	Si
SLV 4	143750	0.46	10694	-5556	224.2	709.75	3.17	Si
SLV 12	143750	0.46	11662	-6058	224.2	767.23	3.42	Si
SLV 11	143750	0.46	11662	-6058	224.2	767.23	3.42	Si
SLV 1	143750	0.46	13051	-6780	224.2	847.83	3.78	Si
SLV 2	143750	0.46	13051	-6780	224.2	847.83	3.78	Si
SLV 16	143750	0.46	16412	-8526	224.2	1033.36	4.61	Si
SLV 15	143750	0.46	16412	-8526	224.2	1033.36	4.61	Si

Verifica dei meccanismi locali di collasso con analisi cinematica lineare

forza di aggancio al piano = 0 quota mezzeria = 10.3 Wa = 0.05 Ta = 0.0731

Comb.	N top	N base	V orto	α0	M*	e*	a0*	aLim	Verifica
SLV 12	-2086	-8770	250	0	486.4	0.89	0	9.02602	No
SLV 8	-2264	-8619	304	0	503.1	0.891	0	9.02602	No
SLV 11	-2086	-8770	250	0	486.4	0.89	0	9.02602	No
SLV 7	-2264	-8619	304	0	503.1	0.891	0	9.02602	No
SLV 10	-7977	-6246	-301	0.015	1071.1	0.934	0.24082	9.02602	No
SLV 9	-7977	-6246	-301	0.015	1071.1	0.934	0.24082	9.02602	No
SLV 4	-4532	-7560	174	0.022	725	0.911	0.35763	10.21601	No
SLV 3	-4532	-7560	174	0.022	725	0.911	0.35763	10.21601	No
SLV 5	-8154	-6095	-247	0.021	1089	0.935	0.33302	9.02602	No
SLV 6	-8154	-6095	-247	0.021	1089	0.935	0.33302	9.02602	No

Tabella dei coefficienti di sicurezza minimi

Stato limite	Coeff.s.	Comb.	Verifica
PF_SLU	8.216	SLU 38	Si
V_SLU	4.387	SLU 41	Si
PF_SLV	0	SLV 3	No
V_SLV	0	SLV 3	No
PFFP_SLV	2.964	SLV 7	Si
R_SLV	0	SLV 7	No

Maschio 185

Verifiche condotte secondo D.M. 17-01-18 (N.T.C.)

Dati geometrici

X ini.	Y ini.	X fin.	Y fin.	Quota i.	Quota.s	l	Sp.	h netta	h ini.	h fin.	a	a.s.,sx	a.s.,dx
-20.6	1.141	-24.613	1.141	L5	L6	4.013	0.28	3.5	3.5	3.5			

Caratteristiche del materiale

(Circolare 7 21-01-19 C8.5.I) Muratura in mattoni pieni e malta di calce LC2_Corti

fb	fk	fvk0	fmedio	τ0	fv0	μ	ϕ	fv,lim	E	G	FC
600000			345000	9000	20000	0.58	0.77	32500	320000000	128000000	1.2

Verifica a pressoflessione nel piano secondo D.M. 17-01-18 NTC §7.8.2.2.1 in combinazioni non sismiche, γM = 3

Comb.	Quota	N	M	σ0	Mu	c.s.	Verifica
SLU 41	8.55	-23143	7923.13	20598	34692.55	4.379	Si
SLU 41	10.65	-27834	-4348.77	24773	38861.81	8.936	Si
SLU 82	8.55	-27255	8778.71	24258	38399.83	4.374	Si
SLU 82	10.65	-31283	-4364.98	27843	41312.4	9.465	Si
SLU 83	8.55	-28515	9027.39	25379	39386.97	4.363	Si
SLU 83	10.65	-32945	-4903.01	29322	42306.66	8.629	Si
SLU 81	8.55	-27288	8940.85	24287	38426.31	4.298	Si
SLU 81	10.65	-31349	-4409.63	27901	41353.8	9.378	Si
SLU 39	8.55	-21916	7836.59	19506	33442.98	4.268	Si
SLU 39	10.65	-26238	-3855.39	23352	37551.25	9.74	Si
SLU 40	8.55	-21884	7674.45	19477	33408.8	4.353	Si
SLU 40	10.65	-26172	-3810.74	23294	37495.21	9.839	Si
SLU 74	8.55	-28732	8513.26	25572	39550.24	4.646	Si
SLU 74	10.65	-32592	-4898.54	29007	42105.52	8.596	Si
SLU 84	8.55	-28482	8865.26	25350	39362.24	4.44	Si
SLU 84	10.65	-32880	-4858.36	29263	42269.84	8.7	Si
SLU 79	8.55	-29445	8592.71	26207	40071.41	4.663	Si
SLU 79	10.65	-33576	-5204.42	29883	42652.51	8.195	Si
SLU 42	8.55	-23111	7761	20569	34660.13	4.466	Si
SLU 42	10.65	-27768	-4304.11	24714	38810.34	9.017	Si

Verifica a pressoflessione nel piano secondo D.M. 17-01-18 NTC §7.8.2.2.1 in combinazioni sismiche, γM = 2

Comb.	Quota	N	M	σ0	Mu	c.s.	Verifica
SLV 4	8.55	-25583	11000.13	22769	41763.48	3.797	Si
SLV 4	10.65	-29995	-10499.41	26696	47032.47	4.48	Si

Comb.	Quota	N	M	σ0	Mu	c.s.	Verifica
SLV 5	8.55	-21506	9440.37	19141	36390.34	3.855	Si
SLV 5	10.65	-26051	-7862.33	23186	42350.18	5.386	Si
SLV 16	8.55	-14792	-925.64	13165	26480.31	28.608	Si
SLV 16	10.65	-12306	6205.9	10953	22477.55	3.622	Si
SLV 6	8.55	-21506	9440.37	19141	36390.34	3.855	Si
SLV 6	10.65	-26051	-7862.33	23186	42350.18	5.386	Si
SLV 3	8.55	-25583	11000.13	22769	41763.48	3.797	Si
SLV 3	10.65	-29995	-10499.41	26696	47032.47	4.48	Si
SLV 2	8.55	-25444	12206.71	22646	41589.29	3.407	Si
SLV 2	10.65	-31032	-11980.85	27619	48188.48	4.022	Si
SLV 1	8.55	-25444	12206.71	22646	41589.29	3.407	Si
SLV 1	10.65	-31032	-11980.85	27619	48188.48	4.022	Si
SLV 13	8.55	-14654	280.95	13042	26262.54	93.479	Si
SLV 13	10.65	-13343	4724.47	11876	24169.84	5.116	Si
SLV 14	8.55	-14654	280.95	13042	26262.54	93.479	Si
SLV 14	10.65	-13343	4724.47	11876	24169.84	5.116	Si
SLV 15	8.55	-14792	-925.64	13165	26480.31	28.608	Si
SLV 15	10.65	-12306	6205.9	10953	22477.55	3.622	Si

Verifica a taglio nel piano secondo D.M. 17-01-18 (N.T.C.) §7.8.2.2.2 con rottura per scorrimento in combinazioni non sismiche, γM = 3

Comb.	Quota	N	V par	M	σ0	σN	l'	fvd	Vt scorr.	Vt fess.diag.	Vt,lim	c.s.	Verifica
SLU 80	8.55	-29412	15674	8430.57		26178	4.0128	9046	10164			0.65	No, Vu<V
SLU 80	10.65	-33510	15716	-5159.77		29825	4.0128	9532	10710			0.68	No, Vu<V
SLU 79	8.55	-29445	15823	8592.71		26207	4.0128	9050	10168			0.64	No, Vu<V
SLU 79	10.65	-33576	15822	-5204.42		29883	4.0128	9540	10719			0.68	No, Vu<V
SLU 41	8.55	-23143	14468	7923.13		20598	4.0128	8302	9328			0.64	No, Vu<V
SLU 41	10.65	-27834	14467	-4348.77		24773	4.0128	8859	9953			0.69	No, Vu<V
SLU 83	8.55	-28515	16172	9027.39		25379	4.0128	8939	10044			0.62	No, Vu<V
SLU 83	10.65	-32945	16171	-4903.01		29322	4.0128	9465	10635			0.66	No, Vu<V
SLU 78	8.55	-29926	15861	8437.67		26635	4.0128	9107	10232			0.65	No, Vu<V
SLU 78	10.65	-34123	15902	-5347.27		30370	4.0128	9605	10792			0.68	No, Vu<V
SLU 82	8.55	-27255	15395	8778.71		24258	4.0128	8790	9876			0.64	No, Vu<V
SLU 82	10.65	-31283	15436	-4364.98		27843	4.0128	9268	10413			0.67	No, Vu<V
SLU 84	8.55	-28482	16024	8865.26		25350	4.0128	8936	10040			0.63	No, Vu<V
SLU 84	10.65	-32880	16065	-4858.36		29263	4.0128	9457	10626			0.66	No, Vu<V
SLU 81	8.55	-27288	15543	8940.85		24287	4.0128	8794	9880			0.64	No, Vu<V
SLU 81	10.65	-31349	15542	-4409.63		27901	4.0128	9276	10422			0.67	No, Vu<V
SLU 42	8.55	-23111	14320	7761		20569	4.0128	8298	9323			0.65	No, Vu<V
SLU 42	10.65	-27768	14361	-4304.11		24714	4.0128	8851	9945			0.69	No, Vu<V
SLU 77	8.55	-29959	16010	8599.81		26664	4.0128	9111	10237			0.64	No, Vu<V
SLU 77	10.65	-34188	16008	-5391.92		30428	4.0128	9613	10800			0.67	No, Vu<V

Verifica a taglio nel piano secondo D.M. 17-01-18 (N.T.C.) §7.8.2.2.2 con rottura per scorrimento in combinazioni sismiche, γM = 2

Comb.	Quota	N	V par	M	σ0	σN	l'	fvd	Vt scorr.	Vt fess.diag.	Vt,lim	c.s.	Verifica
SLV 1	8.55	-25444	21689	12206.71		22646	4.0128	12863	14452			0.67	No, Vu<V
SLV 1	10.65	-31032	19617	-11980.85		27619	4.0128	13857	15570			0.79	No, Vu<V
SLV 7	8.55	-21967	8600	5418.44		19551	4.0128	12244	13756			1.6	Si
SLV 7	10.65	-22594	8544	-2924.21		20109	4.0128	12355	13882			1.62	Si
SLV 5	8.55	-21506	17087	9440.37		19141	4.0128	12162	13664			0.8	No, Vu<V
SLV 5	10.65	-26051	15992	-7862.33		23186	4.0128	12971	14573			0.91	No, Vu<V
SLV 6	8.55	-21506	17087	9440.37		19141	4.0128	12162	13664			0.8	No, Vu<V
SLV 6	10.65	-26051	15992	-7862.33		23186	4.0128	12971	14573			0.91	No, Vu<V
SLV 4	8.55	-25583	19143	11000.13		22769	4.0128	12887	14480			0.76	No, Vu<V
SLV 4	10.65	-29995	17383	-10499.41		26696	4.0128	13673	15362			0.88	No, Vu<V
SLV 10	8.55	-18269	10596	5862.64		16260	4.0128	11585	13017			1.23	Si
SLV 10	10.65	-20745	10651	-2850.74		18463	4.0128	12026	13512			1.27	Si
SLV 8	8.55	-21967	8600	5418.44		19551	4.0128	12244	13756			1.6	Si
SLV 8	10.65	-22594	8544	-2924.21		20109	4.0128	12355	13882			1.62	Si
SLV 9	8.55	-18269	10596	5862.64		16260	4.0128	11585	13017			1.23	Si
SLV 9	10.65	-20745	10651	-2850.74		18463	4.0128	12026	13512			1.27	Si
SLV 2	8.55	-25444	21689	12206.71		22646	4.0128	12863	14452			0.67	No, Vu<V
SLV 2	10.65	-31032	19617	-11980.85		27619	4.0128	13857	15570			0.79	No, Vu<V
SLV 3	8.55	-25583	19143	11000.13		22769	4.0128	12887	14480			0.76	No, Vu<V
SLV 3	10.65	-29995	17383	-10499.41		26696	4.0128	13673	15362			0.88	No, Vu<V

Verifica a pressoflessione fuori piano D.M. 17-01-18 (N.T.C.)

quota 10.3 Wa 0.05 denominatore 8 γM = 2

Comb.	fd	Sa	σ0	N	M	Mc	Coeff.s.	Verifica
SLV 15	143750	0.46	11414	-12824	496.16	1627.66	3.28	Si
SLV 16	143750	0.46	11414	-12824	496.16	1627.66	3.28	Si
SLV 14	143750	0.46	12041	-13529	496.16	1707.39	3.44	Si
SLV 13	143750	0.46	12041	-13529	496.16	1707.39	3.44	Si
SLV 11	143750	0.46	15813	-17767	496.16	2165.52	4.36	Si
SLV 12	143750	0.46	15813	-17767	496.16	2165.52	4.36	Si
SLV 9	143750	0.46	17904	-20117	496.16	2403.65	4.84	Si
SLV 10	143750	0.46	17904	-20117	496.16	2403.65	4.84	Si
SLV 7	143750	0.46	20212	-22709	496.16	2653.41	5.35	Si
SLV 8	143750	0.46	20212	-22709	496.16	2653.41	5.35	Si

Verifica dei meccanismi locali di collasso con analisi cinematica lineare

forza di aggancio al piano = 0 quota mezzeria = 10.3 Wa = 0.05 Ta = 0.0731

Comb.	N top	N base	V orto	α0	M*	e*	a0*	aLim	Verifica
SLV 11	-15009	-18730	-674	0.011	2090.1	0.928	0.17687	9.02602	No
SLV 12	-15009	-18730	-674	0.011	2090.1	0.928	0.17687	9.02602	No
SLV 8	-17700	-21967	-638	0.017	2361.9	0.935	0.25808	9.02602	No
SLV 7	-17700	-21967	-638	0.017	2361.9	0.935	0.25808	9.02602	No
SLV 10	-18343	-18269	634	0.017	2426.8	0.937	0.27126	9.02602	No
SLV 9	-18343	-18269	634	0.017	2426.8	0.937	0.27126	9.02602	No
SLV 5	-21034	-21506	670	0.019	2699.3	0.942	0.28548	9.02602	No

Comb.	N top	N base	V orto	α0	M*	e*	a0*	aLim	Verifica
SLV 6	-21034	-21506	670	0.019	2699.3	0.942	0.28548	9.02602	No
SLV 16	-13035	-14792	-257	0.033	1891.5	0.923	0.52004	10.21601	No
SLV 15	-13035	-14792	-257	0.033	1891.5	0.923	0.52004	10.21601	No

Tabella dei coefficienti di sicurezza minimi

Stato limite	Coeff.s.	Comb.	Verifica
PF_SLU	4.268	SLU 39	Si
V_SLU	0.621	SLU 83	No
PF_SLV	3.407	SLV 1	Si
V_SLV	0.666	SLV 1	No
PFFP_SLV	3.281	SLV 15	Si
R_SLV	0.02	SLV 11	No

Maschio 186

Verifiche condotte secondo D.M. 17-01-18 (N.T.C.)

Dati geometrici

X ini.	Y ini.	X fin.	Y fin.	Quota i.	Quota.s	l	Sp.	h netta	h ini.	h fin.	a	a.s.,sx	a.s.,dx
-12.865	1.141	-19.8	1.141	L5	L6	6.935	0.28	3.5	3.5	3.5			

Caratteristiche del materiale

(Circolare 7 21-01-19 C8.5.I) Muratura in mattoni pieni e malta di calce LC2_Corti

fb	fk	fvk0	fmedio	τ0	fv0	μ	ϕ	fv,lim	E	G	FC
600000			345000	9000	20000	0.58	0.77	32500	320000000	128000000	1.2

Verifica a pressoflessione nel piano secondo D.M. 17-01-18 NTC §7.8.2.2.1 in combinazioni non sismiche, γM = 3

Comb.	Quota	N	M	σ0	Mu	c.s.	Verifica
SLU 74	8.55	-58009	-12676.9	29874	127378.26	10.048	Si
SLU 74	11.05	-50903	-9448.2	26214	119703.77	12.669	Si
SLU 77	8.55	-60784	-12718.41	31303	129773.84	10.204	Si
SLU 77	11.05	-53903	-10162.03	27759	123214.16	12.125	Si
SLU 41	8.55	-48136	-12083.05	24789	116116.82	9.61	Si
SLU 41	11.05	-43665	-8272.52	22487	109612.26	13.25	Si
SLU 32	8.55	-48223	-11371.55	24834	116234.85	10.222	Si
SLU 32	11.05	-43329	-8110.76	22314	109087.67	13.45	Si
SLU 82	8.55	-55230	-12508.23	28443	124640.7	9.965	Si
SLU 82	11.05	-48515	-8441.57	24985	116628.33	13.816	Si
SLU 84	8.55	-58005	-12549.74	29872	127374.36	10.15	Si
SLU 84	11.05	-51515	-9155.4	26530	120452.82	13.156	Si
SLU 40	8.55	-45444	-11202.88	23403	112304.95	10.025	Si
SLU 40	11.05	-40942	-7104.14	21084	105219.45	14.811	Si
SLU 39	8.55	-45361	-12041.54	23360	112182.55	9.316	Si
SLU 39	11.05	-40665	-7558.69	20942	104755.11	13.859	Si
SLU 83	8.55	-57922	-13388.4	29829	127297.6	9.508	Si
SLU 83	11.05	-51239	-9609.96	26387	120116.73	12.499	Si
SLU 81	8.55	-55147	-13346.89	28400	124553.86	9.332	Si
SLU 81	11.05	-48238	-8896.13	24842	116255.85	13.068	Si

Verifica a pressoflessione nel piano secondo D.M. 17-01-18 NTC §7.8.2.2.1 in combinazioni sismiche, γM = 2

Comb.	Quota	N	M	σ0	Mu	c.s.	Verifica
SLV 3	8.55	-40951	18834.72	21089	117488.36	6.238	Si
SLV 3	11.05	-41397	-28599.47	21319	118499.15	4.143	Si
SLV 10	8.55	-44163	-19388.81	22743	124631.3	6.428	Si
SLV 10	11.05	-31198	2811.15	16066	93954.25	33.422	Si
SLV 16	8.55	-34178	-32787.11	17601	101439.53	3.094	Si
SLV 16	11.05	-24225	15137.55	12475	75422.65	4.982	Si
SLV 14	8.55	-37692	-34942.19	19411	109934.64	3.146	Si
SLV 14	11.05	-24669	16513.65	12704	76646.11	4.641	Si
SLV 1	8.55	-44465	16679.64	22899	125287.71	7.511	Si
SLV 1	11.05	-41842	-27223.37	21548	119499.54	4.39	Si
SLV 4	8.55	-40951	18834.72	21089	117488.36	6.238	Si
SLV 4	11.05	-41397	-28599.47	21319	118499.15	4.143	Si
SLV 2	8.55	-44465	16679.64	22899	125287.71	7.511	Si
SLV 2	11.05	-41842	-27223.37	21548	119499.54	4.39	Si
SLV 9	8.55	-44163	-19388.81	22743	124631.3	6.428	Si
SLV 9	11.05	-31198	2811.15	16066	93954.25	33.422	Si
SLV 15	8.55	-34178	-32787.11	17601	101439.53	3.094	Si
SLV 15	11.05	-24225	15137.55	12475	75422.65	4.982	Si
SLV 13	8.55	-37692	-34942.19	19411	109934.64	3.146	Si
SLV 13	11.05	-24669	16513.65	12704	76646.11	4.641	Si

Verifica a taglio nel piano secondo D.M. 17-01-18 (N.T.C.) §7.8.2.2.2 con rottura per scorrimento in combinazioni non sismiche, γM = 3

Comb.	Quota	N	V par	M	σ0	σN	l'	fvd	Vt scorr.	Vt fess.diag.	Vt,lim	c.s.	Verifica
SLU 7	8.55	-44238	803	-6273.39		22782	6.935	8593	16686			20.77	Si
SLU 7	11.05	-38164	689	-6681.97		19654	6.935	8176	15876			23.06	Si
SLU 34	8.55	-47121	851	-9769.63		24267	6.935	8791	17071			20.05	Si
SLU 34	11.05	-42525	796	-7204.91		21900	6.935	8476	16458			20.67	Si
SLU 17	8.55	-45688	914	-8205.75		23529	6.935	8693	16880			18.46	Si
SLU 17	11.05	-40636	814	-7257.1		20927	6.935	8346	16206			19.91	Si
SLU 15	8.55	-46927	936	-8409.9		24167	6.935	8778	17045			18.21	Si
SLU 15	11.05	-41902	819	-7405.36		21579	6.935	8433	16375			20	Si
SLU 36	8.55	-51081	919	-10574.4		26306	6.935	9063	17599			19.15	Si
SLU 36	11.05	-46606	761	-8370.04		24002	6.935	8756	17002			22.34	Si
SLU 13	8.55	-42968	869	-7605.14		22128	6.935	8506	16517			19.01	Si
SLU 13	11.05	-37820	854	-6240.23		19477	6.935	8152	15830			18.54	Si

Comb.	Quota	N	V par	M	σ0	σN	l'	fvd	Vt scorr.	Vt fess.diag.	Vt,lim	c.s.	Verifica
SLU 59	8.55	-55474	881	-9511.1		28568	6.935	9365	18184			20.64	Si
SLU 59	11.05	-48210	795	-8594.54		24827	6.935	8866	17216			21.67	Si
SLU 38	8.55	-49841	897	-10370.25		25667	6.935	8978	17433			19.43	Si
SLU 38	11.05	-45341	757	-8221.77		23350	6.935	8669	16833			22.25	Si
SLU 55	8.55	-52754	835	-8910.49		27168	6.935	9178	17822			21.34	Si
SLU 55	11.05	-45394	834	-7577.67		23377	6.935	8673	16840			20.19	Si
SLU 57	8.55	-56714	903	-9715.25		29207	6.935	9450	18350			20.33	Si
SLU 57	11.05	-49475	799	-8742.8		25479	6.935	8953	17384			21.76	Si

Verifica a taglio nel piano secondo D.M. 17-01-18 (N.T.C.) §7.8.2.2.2 con rottura per scorrimento in combinazioni sismiche, γM = 2

Comb.	Quota	N	V par	M	σ0	σN	l'	fvd	Vt scorr.	Vt fess.diag.	Vt,lim	c.s.	Verifica
SLV 16	8.55	-34178	-29878	-32787.11		17601	6.935	11854	23017			0.77	No, Vu<V
SLV 16	11.05	-24225	-23483	15137.55		12475	6.935	10828	21027			0.9	No, Vu<V
SLV 7	8.55	-34480	9608	3281.34		17757	6.935	11885	23078			2.4	Si
SLV 7	11.05	-34868	8473	-14896.96		17957	6.935	11925	23155			2.73	Si
SLV 13	8.55	-37692	-30303	-34942.19		19411	6.935	12216	23720			0.78	No, Vu<V
SLV 13	11.05	-24669	-24348	16513.65		12704	6.935	10874	21115			0.87	No, Vu<V
SLV 2	8.55	-44465	29681	16679.64		22899	6.935	12913	25075			0.84	No, Vu<V
SLV 2	11.05	-41842	23262	-27223.37		21548	6.935	12643	24550			1.06	Si
SLV 15	8.55	-34178	-29878	-32787.11		17601	6.935	11854	23017			0.77	No, Vu<V
SLV 15	11.05	-24225	-23483	15137.55		12475	6.935	10828	21027			0.9	No, Vu<V
SLV 1	8.55	-44465	29681	16679.64		22899	6.935	12913	25075			0.84	No, Vu<V
SLV 1	11.05	-41842	23262	-27223.37		21548	6.935	12643	24550			1.06	Si
SLV 3	8.55	-40951	30106	18834.72		21089	6.935	12551	24372			0.81	No, Vu<V
SLV 3	11.05	-41397	24127	-28599.47		21319	6.935	12597	24461			1.01	Si
SLV 8	8.55	-34480	9608	3281.34		17757	6.935	11885	23078			2.4	Si
SLV 8	11.05	-34868	8473	-14896.96		17957	6.935	11925	23155			2.73	Si
SLV 4	8.55	-40951	30106	18834.72		21089	6.935	12551	24372			0.81	No, Vu<V
SLV 4	11.05	-41397	24127	-28599.47		21319	6.935	12597	24461			1.01	Si
SLV 14	8.55	-37692	-30303	-34942.19		19411	6.935	12216	23720			0.78	No, Vu<V
SLV 14	11.05	-24669	-24348	16513.65		12704	6.935	10874	21115			0.87	No, Vu<V

Verifica a pressoflessione fuori piano D.M. 17-01-18 (N.T.C.)

quota 10.3 Wa 0.05 denominatore 8 γM = 2

Comb.	fd	Sa	σ0	N	M	Mc	Coeff.s.	Verifica
SLV 13	143750	0.46	15840	-30759	857.48	3747.96	4.37	Si
SLV 14	143750	0.46	15840	-30759	857.48	3747.96	4.37	Si
SLV 15	143750	0.46	15973	-31016	857.48	3774.57	4.4	Si
SLV 16	143750	0.46	15973	-31016	857.48	3774.57	4.4	Si
SLV 9	143750	0.46	17375	-33739	857.48	4051.74	4.73	Si
SLV 10	143750	0.46	17375	-33739	857.48	4051.74	4.73	Si
SLV 11	143750	0.46	17816	-34595	857.48	4137.13	4.82	Si
SLV 12	143750	0.46	17816	-34595	857.48	4137.13	4.82	Si
SLV 5	143750	0.46	18823	-36550	857.48	4328.71	5.05	Si
SLV 6	143750	0.46	18823	-36550	857.48	4328.71	5.05	Si

Verifica dei meccanismi locali di collasso con analisi cinematica lineare

forza di aggancio al piano = 0 quota mezzeria = 10.3 Wa = 0.05 Ta = 0.0731

Comb.	N top	N base	V orto	α0	M*	e*	a0*	aLim	Verifica
SLV 12	-24600	-32448	-1167	0.01	3477.4	0.926	0.15644	9.02602	No
SLV 11	-24600	-32448	-1167	0.01	3477.4	0.926	0.15644	9.02602	No
SLV 8	-27918	-34480	-1203	0.012	3812	0.931	0.18464	9.02602	No
SLV 7	-27918	-34480	-1203	0.012	3812	0.931	0.18464	9.02602	No
SLV 10	-34231	-44163	1201	0.016	4450.3	0.94	0.25201	9.02602	No
SLV 9	-34231	-44163	1201	0.016	4450.3	0.94	0.25201	9.02602	No
SLV 6	-37550	-46195	1165	0.019	4786.4	0.943	0.29159	9.02602	No
SLV 5	-37550	-46195	1165	0.019	4786.4	0.943	0.29159	9.02602	No
SLV 14	-26989	-37692	415	0.035	3718.2	0.93	0.54491	10.21601	No
SLV 13	-26989	-37692	415	0.035	3718.2	0.93	0.54491	10.21601	No

Tabella dei coefficienti di sicurezza minimi

Stato limite	Coeff.s.	Comb.	Verifica
PF_SLU	9.316	SLU 39	Si
V_SLU	18.206	SLU 15	Si
PF_SLV	3.094	SLV 15	Si
V_SLV	0.77	SLV 15	No
PFFP_SLV	4.371	SLV 13	Si
R_SLV	0.017	SLV 11	No

Maschio 187

Verifiche condotte secondo D.M. 17-01-18 (N.T.C.)

Dati geometrici

X ini.	Y ini.	X fin.	Y fin.	Quota i.	Quota.s	l	Sp.	h netta	h ini.	h fin.	a	a.s.,sx	a.s.,dx
-4.93	1.141	-11.865	1.141	L5	L6	6.935	0.28	3.5	3.5	3.5			

Caratteristiche del materiale

(Circolare 7 21-01-19 C8.5.I) Muratura in mattoni pieni e malta di calce LC2_Corti

fb	fk	fvk0	fmedio	τ0	fv0	μ	ϕ	fv,lim	E	G	FC
600000			345000	9000	20000	0.58	0.77	32500	320000000	128000000	1.2

Verifica a pressoflessione nel piano secondo D.M. 17-01-18 NTC §7.8.2.2.1 in combinazioni non sismiche, γM = 3

Comb.	Quota	N	M	σ0	Mu	c.s.	Verifica
SLU 40	8.55	-52496	3572.47	27035	121616.84	34.043	Si

Comb.	Quota	N	M	σ0	Mu	c.s.	Verifica
SLU 40	11.05	-48690	1609.93	25075	116862.69	72.589	Si
SLU 74	8.55	-66383	3967.34	34186	133580.09	33.67	Si
SLU 74	11.05	-60141	2248.73	30972	129249.47	57.477	Si
SLU 83	8.55	-66741	4338.98	34371	133776.7	30.831	Si
SLU 83	11.05	-60942	1927.85	31384	129900.68	67.381	Si
SLU 32	8.55	-55630	3804.44	28649	125056.26	32.871	Si
SLU 32	11.05	-51424	1409.87	26482	120341.83	85.357	Si
SLU 35	8.55	-59157	3736.57	30465	128410.24	34.366	Si
SLU 35	11.05	-55162	501.19	28408	124570.1	248.551	Si
SLU 43	8.55	-52624	1895.75	27101	121766.02	64.231	Si
SLU 43	11.05	-44482	3291.81	22908	110866.03	33.679	Si
SLU 39	8.55	-52462	4243.95	27017	121577.83	28.647	Si
SLU 39	11.05	-48486	1997.68	24970	116589.3	58.362	Si
SLU 81	8.55	-63215	4406.86	32555	131595.22	29.861	Si
SLU 81	11.05	-57204	2836.54	29459	126619.83	44.639	Si
SLU 41	8.55	-55988	4176.08	28833	125421.63	30.033	Si
SLU 41	11.05	-52225	1088.99	26895	121299.14	111.387	Si
SLU 77	8.55	-69909	3899.47	36002	135271.76	34.69	Si
SLU 77	11.05	-63880	1340.05	32897	132048.75	98.54	Si

Verifica a pressoflessione nel piano secondo D.M. 17-01-18 NTC §7.8.2.2.1 in combinazioni sismiche, γM = 2

Comb.	Quota	N	M	σ0	Mu	c.s.	Verifica
SLV 6	8.55	-46959	15087.72	24183	130603.78	8.656	Si
SLV 6	11.05	-35551	-8628.79	18308	104802.82	12.146	Si
SLV 3	8.55	-39858	25846.34	20526	114990.26	4.449	Si
SLV 3	11.05	-29881	-18092.01	15388	90564.13	5.006	Si
SLV 13	8.55	-49026	-21197.72	25248	134871.57	6.363	Si
SLV 13	11.05	-47742	22764.3	24586	132234.66	5.809	Si
SLV 2	8.55	-42001	28987.7	21630	119856.42	4.135	Si
SLV 2	11.05	-29561	-20754.3	15224	89732.6	4.324	Si
SLV 1	8.55	-42001	28987.7	21630	119856.42	4.135	Si
SLV 1	11.05	-29561	-20754.3	15224	89732.6	4.324	Si
SLV 14	8.55	-49026	-21197.72	25248	134871.57	6.363	Si
SLV 14	11.05	-47742	22764.3	24586	132234.66	5.809	Si
SLV 16	8.55	-46884	-24339.08	24144	130445.4	5.36	Si
SLV 16	11.05	-48062	25426.59	24751	132896.16	5.227	Si
SLV 15	8.55	-46884	-24339.08	24144	130445.4	5.36	Si
SLV 15	11.05	-48062	25426.59	24751	132896.16	5.227	Si
SLV 4	8.55	-39858	25846.34	20526	114990.26	4.449	Si
SLV 4	11.05	-29881	-18092.01	15388	90564.13	5.006	Si
SLV 5	8.55	-46959	15087.72	24183	130603.78	8.656	Si
SLV 5	11.05	-35551	-8628.79	18308	104802.82	12.146	Si

Verifica a taglio nel piano secondo D.M. 17-01-18 (N.T.C.) §7.8.2.2.2 con rottura per scorrimento in combinazioni non sismiche, γM = 3

Comb.	Quota	N	V par	M	σ0	σN	I'	fvd	Vt scorr.	Vt fess.diag.	Vt,lim	c.s.	Verifica
SLU 52	8.55	-56399	-1706	1805.6		29045	6.935	9428	18308			10.73	Si
SLU 52	11.05	-49621	-2126	2537.12		25554	6.935	8963	17404			8.19	Si
SLU 10	8.55	-45647	-1414	1642.7		23507	6.935	8690	16874			11.93	Si
SLU 10	11.05	-40903	-1791	1698.26		21064	6.935	8364	16242			9.07	Si
SLU 73	8.55	-61676	-1528	2846.71		31762	6.935	9791	19011			12.44	Si
SLU 73	11.05	-55488	-2005	2236.76		28576	6.935	9366	18186			9.07	Si
SLU 2	8.55	-41927	-1277	613.7		21592	6.935	8434	16378			12.82	Si
SLU 2	11.05	-36105	-1530	1806.7		18594	6.935	8035	15602			10.2	Si
SLU 44	8.55	-52680	-1569	776.61		27129	6.935	9173	17812			11.36	Si
SLU 44	11.05	-44823	-1866	2645.56		23083	6.935	8633	16764			8.99	Si
SLU 65	8.55	-57957	-1391	1817.72		29847	6.935	9535	18515			13.31	Si
SLU 65	11.05	-50690	-1744	2345.2		26105	6.935	9036	17546			10.06	Si
SLU 61	8.55	-57971	-1561	2694.26		29854	6.935	9536	18517			11.86	Si
SLU 61	11.05	-51541	-2018	2749.14		26543	6.935	9095	17660			8.75	Si
SLU 31	8.55	-50924	-1237	2683.81		26225	6.935	9052	17578			14.21	Si
SLU 31	11.05	-46770	-1669	1397.9		24086	6.935	8767	17024			10.2	Si
SLU 82	8.55	-63248	-1384	3735.37		32572	6.935	9898	19221			13.89	Si
SLU 82	11.05	-57408	-1897	2448.79		29564	6.935	9497	18442			9.72	Si
SLU 19	8.55	-47219	-1270	2531.36		24317	6.935	8798	17084			13.46	Si
SLU 19	11.05	-42823	-1682	1910.28		22053	6.935	8496	16498			9.81	Si

Verifica a taglio nel piano secondo D.M. 17-01-18 (N.T.C.) §7.8.2.2.2 con rottura per scorrimento in combinazioni sismiche, γM = 2

Comb.	Quota	N	V par	M	σ0	σN	I'	fvd	Vt scorr.	Vt fess.diag.	Vt,lim	c.s.	Verifica
SLV 11	8.55	-41925	-11131	-10439.11		21591	6.935	12651	24567			2.21	Si
SLV 11	11.05	-42072	-9939	13301.08		21667	6.935	12667	24596			2.47	Si
SLV 12	8.55	-41925	-11131	-10439.11		21591	6.935	12651	24567			2.21	Si
SLV 12	11.05	-42072	-9939	13301.08		21667	6.935	12667	24596			2.47	Si
SLV 2	8.55	-42001	29557	28987.7		21630	6.935	12659	24582			0.83	No, Vu<V
SLV 2	11.05	-29561	23177	-20754.3		15224	6.935	11378	22094			0.95	No, Vu<V
SLV 13	8.55	-49026	-30227	-21197.72		25248	6.935	13383	25987			0.86	No, Vu<V
SLV 13	11.05	-47742	-24123	22764.3		24586	6.935	13251	25730			1.07	Si
SLV 3	8.55	-39858	28713	25846.34		20526	6.935	12439	24153			0.84	No, Vu<V
SLV 3	11.05	-29881	22083	-18092.01		15388	6.935	11411	22158			1	Si
SLV 15	8.55	-46884	-31071	-24339.08		24144	6.935	13162	25558			0.82	No, Vu<V
SLV 15	11.05	-48062	-25217	25426.59		24751	6.935	13284	25794			1.02	Si
SLV 16	8.55	-46884	-31071	-24339.08		24144	6.935	13162	25558			0.82	No, Vu<V
SLV 16	11.05	-48062	-25217	25426.59		24751	6.935	13284	25794			1.02	Si
SLV 4	8.55	-39858	28713	25846.34		20526	6.935	12439	24153			0.84	No, Vu<V
SLV 4	11.05	-29881	22083	-18092.01		15388	6.935	11411	22158			1	Si
SLV 14	8.55	-49026	-30227	-21197.72		25248	6.935	13383	25987			0.86	No, Vu<V
SLV 14	11.05	-47742	-24123	22764.3		24586	6.935	13251	25730			1.07	Si
SLV 1	8.55	-42001	29557	28987.7		21630	6.935	12659	24582			0.83	No, Vu<V
SLV 1	11.05	-29561	23177	-20754.3		15224	6.935	11378	22094			0.95	No, Vu<V

Verifica a pressoflessione fuori piano D.M. 17-01-18 (N.T.C.)

quota 10.3 Wa 0.05 denominatore 8 γM = 2

Comb.	fd	Sa	σ0	N	M	Mc	Coeff.s.	Verifica
SLV 1	143750	0.46	18601	-36120	857.48	4287	5	Si
SLV 2	143750	0.46	18601	-36120	857.48	4287	5	Si
SLV 3	143750	0.46	19102	-37092	857.48	4381.11	5.11	Si
SLV 4	143750	0.46	19102	-37092	857.48	4381.11	5.11	Si
SLV 5	143750	0.46	19841	-38527	857.48	4517.92	5.27	Si
SLV 6	143750	0.46	19841	-38527	857.48	4517.92	5.27	Si
SLV 10	143750	0.46	21404	-41562	857.48	4799.39	5.6	Si
SLV 9	143750	0.46	21404	-41562	857.48	4799.39	5.6	Si
SLV 7	143750	0.46	21510	-41768	857.48	4818.08	5.62	Si
SLV 8	143750	0.46	21510	-41768	857.48	4818.08	5.62	Si

Verifica dei meccanismi locali di collasso con analisi cinematica lineare

forza di aggancio al piano = 0 quota mezzeria = 10.3 Wa = 0.05 Ta = 0.0731

Comb.	N top	N base	V orto	α0	M*	e*	a0*	aLim	Verifica
SLV 7	-30668	-39817	-954	0.021	4089.8	0.935	0.32208	9.02602	No
SLV 8	-30668	-39817	-954	0.021	4089.8	0.935	0.32208	9.02602	No
SLV 12	-34472	-41925	-989	0.022	4474.6	0.94	0.33487	9.02602	No
SLV 11	-34472	-41925	-989	0.022	4474.6	0.94	0.33487	9.02602	No
SLV 5	-37462	-46959	993	0.023	4777.6	0.943	0.35184	9.02602	No
SLV 6	-37462	-46959	993	0.023	4777.6	0.943	0.35184	9.02602	No
SLV 10	-41265	-49067	957	0.025	5163.2	0.947	0.38313	9.02602	No
SLV 9	-41265	-49067	957	0.025	5163.2	0.947	0.38313	9.02602	No
SLV 2	-30647	-42001	353	0.037	4087.6	0.935	0.57586	10.21601	No
SLV 1	-30647	-42001	353	0.037	4087.6	0.935	0.57586	10.21601	No

Tabella dei coefficienti di sicurezza minimi

Stato limite	Coeff.s.	Comb.	Verifica
PF_SLU	28.647	SLU 39	Si
V_SLU	8.185	SLU 52	Si
PF_SLV	4.135	SLV 1	Si
V_SLV	0.823	SLV 15	No
PFFP_SLV	5	SLV 1	Si
R_SLV	0.036	SLV 7	No

Maschio 188

Verifiche condotte secondo D.M. 17-01-18 (N.T.C.)

Dati geometrici

X ini.	Y ini.	X fin.	Y fin.	Quota i.	Quota.s	l	Sp.	h netta	h ini.	h fin.	a	a.s.,sx	a.s.,dx
-0.117	1.141	-4.13	1.141	L5	L6	4.013	0.28	3.5	3.5	3.5			

Caratteristiche del materiale

(Circolare 7 21-01-19 C8.5.I) Muratura in mattoni pieni e malta di calce LC2_Corti

fb	fk	fvk0	fmedio	τ0	fv0	μ	ϕ	fv,lim	E	G	FC
600000			345000	9000	20000	0.58	0.77	32500	320000000	128000000	1.2

Verifica a pressoflessione nel piano secondo D.M. 17-01-18 NTC §7.8.2.2.1 in combinazioni non sismiche, γM = 3

Comb.	Quota	N	M	σ0	Mu	c.s.	Verifica
SLU 69	8.55	-24280	-654.49	21610	35789.76	54.684	Si
SLU 69	10.65	-24335	7298.89	21659	35841.45	4.911	Si
SLU 37	8.55	-19793	-778.59	17616	31122.33	39.973	Si
SLU 37	10.65	-21928	7084.51	19517	33454.23	4.722	Si
SLU 80	8.55	-24210	-782.43	21548	35723.65	45.657	Si
SLU 80	10.65	-25674	7866.22	22851	37060.63	4.711	Si
SLU 79	8.55	-24284	-948.75	21614	35794.14	37.728	Si
SLU 79	10.65	-25735	7889.18	22905	37113.97	4.704	Si
SLU 77	8.55	-24910	-842.97	22171	36374.29	43.15	Si
SLU 77	10.65	-26503	8125.71	23589	37775.48	4.649	Si
SLU 36	8.55	-20343	-506.49	18106	31742.45	62.671	Si
SLU 36	10.65	-22636	7298.09	20147	34182.53	4.684	Si
SLU 83	8.55	-23727	-1145.05	21118	35262.16	30.795	Si
SLU 83	10.65	-25734	7569.11	22905	37113.5	4.903	Si
SLU 38	8.55	-19718	-612.27	17550	31037.13	50.692	Si
SLU 38	10.65	-21868	7061.56	19463	33390.77	4.729	Si
SLU 35	8.55	-20418	-672.81	18173	31825.61	47.302	Si
SLU 35	10.65	-22697	7321.05	20201	34243.94	4.677	Si
SLU 78	8.55	-24835	-676.65	22104	36305.85	53.655	Si
SLU 78	10.65	-26442	8102.76	23535	37724.19	4.656	Si

Verifica a pressoflessione nel piano secondo D.M. 17-01-18 NTC §7.8.2.2.1 in combinazioni sismiche, γM = 2

Comb.	Quota	N	M	σ0	Mu	c.s.	Verifica
SLV 4	8.55	-13209	4653.88	11756	23950.76	5.146	Si
SLV 4	10.65	-9123	-5276.7	8120	17086.63	3.238	Si
SLV 9	8.55	-15835	-1215	14094	28105.33	23.132	Si
SLV 9	10.65	-19039	10636.04	16946	32900.78	3.093	Si
SLV 16	8.55	-21859	-7031.46	19456	36873.39	5.244	Si
SLV 16	10.65	-24470	11887.32	21779	40343.11	3.394	Si
SLV 10	8.55	-15835	-1215	14094	28105.33	23.132	Si
SLV 10	10.65	-19039	10636.04	16946	32900.78	3.093	Si
SLV 1	8.55	-11825	5450.77	10525	21681.93	3.978	Si
SLV 1	10.65	-9095	-3081.57	8095	17039.16	5.529	Si
SLV 14	8.55	-20476	-6234.57	18225	34954.27	5.607	Si

Comb.	Quota	N	M	σ0	Mu	c.s.	Verifica
SLV 14	10.65	-24442	14082.46	21755	40307.87	2.862	Si
SLV 2	8.55	-11825	5450.77	10525	21681.93	3.978	Si
SLV 2	10.65	-9095	-3081.57	8095	17039.16	5.529	Si
SLV 13	8.55	-20476	-6234.57	18225	34954.27	5.607	Si
SLV 13	10.65	-24442	14082.46	21755	40307.87	2.862	Si
SLV 3	8.55	-13209	4653.88	11756	23950.76	5.146	Si
SLV 3	10.65	-9123	-5276.7	8120	17086.63	3.238	Si
SLV 15	8.55	-21859	-7031.46	19456	36873.39	5.244	Si
SLV 15	10.65	-24470	11887.32	21779	40343.11	3.394	Si

Verifica a taglio nel piano secondo D.M. 17-01-18 (N.T.C.) §7.8.2.2.2 con rottura per scorrimento in combinazioni non sismiche, γM = 3

Comb.	Quota	N	V par	M	σ0	σN	I'	fvd	Vt scorr.	Vt fess.diag.	Vt,lim	c.s.	Verifica
SLU 42	8.55	-19160	-10307	-808.57		17053	4.0126	7829	8797			0.85	No, Vu<V
SLU 42	10.65	-21867	-10347	6741.5		19463	4.0126	8151	9158			0.89	No, Vu<V
SLU 79	8.55	-24284	-10901	-948.75		21614	4.0126	8437	9480			0.87	No, Vu<V
SLU 79	10.65	-25735	-10901	7889.18		22905	4.0126	8610	9673			0.89	No, Vu<V
SLU 77	8.55	-24910	-11100	-842.97		22171	4.0126	8512	9563			0.86	No, Vu<V
SLU 77	10.65	-26503	-11100	8125.71		23589	4.0126	8701	9776			0.88	No, Vu<V
SLU 39	8.55	-18407	-10038	-1090.41		16383	4.0126	7740	8696			0.87	No, Vu<V
SLU 39	10.65	-20998	-10038	6090.03		18689	4.0126	8047	9042			0.9	No, Vu<V
SLU 78	8.55	-24835	-11005	-676.65		22104	4.0126	8503	9553			0.87	No, Vu<V
SLU 78	10.65	-26442	-11046	8102.76		23535	4.0126	8694	9768			0.88	No, Vu<V
SLU 82	8.55	-22824	-10916	-1094.25		20315	4.0126	8264	9285			0.85	No, Vu<V
SLU 82	10.65	-24744	-10956	6871.75		22023	4.0126	8492	9541			0.87	No, Vu<V
SLU 81	8.55	-22899	-11011	-1260.57		20381	4.0126	8273	9295			0.84	No, Vu<V
SLU 81	10.65	-24805	-11011	6894.7		22077	4.0126	8499	9549			0.87	No, Vu<V
SLU 41	8.55	-19235	-10402	-974.89		17120	4.0126	7838	8807			0.85	No, Vu<V
SLU 41	10.65	-21928	-10402	6764.45		19517	4.0126	8158	9166			0.88	No, Vu<V
SLU 83	8.55	-23727	-11374	-1145.05		21118	4.0126	8371	9405			0.83	No, Vu<V
SLU 83	10.65	-25734	-11374	7569.11		22905	4.0126	8610	9673			0.85	No, Vu<V
SLU 84	8.55	-23652	-11279	-978.73		21051	4.0126	8362	9395			0.83	No, Vu<V
SLU 84	10.65	-25674	-11320	7546.16		22851	4.0126	8602	9665			0.85	No, Vu<V

Verifica a taglio nel piano secondo D.M. 17-01-18 (N.T.C.) §7.8.2.2.2 con rottura per scorrimento in combinazioni sismiche, γM = 2

Comb.	Quota	N	V par	M	σ0	σN	I'	fvd	Vt scorr.	Vt fess.diag.	Vt,lim	c.s.	Verifica
SLV 12	8.55	-20445	-8210	-3871.3		18197	4.0126	11973	13452			1.64	Si
SLV 12	10.65	-19130	-6132	3318.92		17027	4.0126	11739	13189			2.15	Si
SLV 11	8.55	-20445	-8210	-3871.3		18197	4.0126	11973	13452			1.64	Si
SLV 11	10.65	-19130	-6132	3318.92		17027	4.0126	11739	13189			2.15	Si
SLV 16	8.55	-21859	-16859	-7031.46		19456	4.0126	12224	13735			0.81	No, Vu<V
SLV 16	10.65	-24470	-14482	11887.32		21779	4.0126	12689	14257			0.98	No, Vu<V
SLV 6	8.55	-13240	-4732	2290.6		11784	4.0126	10690	12011			2.54	Si
SLV 6	10.65	-14435	-6810	5486.84		12848	4.0126	10903	12250			1.8	Si
SLV 14	8.55	-20476	-17767	-6234.57		18225	4.0126	11978	13458			0.76	No, Vu<V
SLV 14	10.65	-24442	-16290	14082.46		21755	4.0126	12684	14251			0.87	No, Vu<V
SLV 10	8.55	-15835	-11237	-1215		14094	4.0126	11152	12530			1.12	Si
SLV 10	10.65	-19039	-12158	10636.04		16946	4.0126	11722	13171			1.08	Si
SLV 15	8.55	-21859	-16859	-7031.46		19456	4.0126	12224	13735			0.81	No, Vu<V
SLV 15	10.65	-24470	-14482	11887.32		21779	4.0126	12689	14257			0.98	No, Vu<V
SLV 5	8.55	-13240	-4732	2290.6		11784	4.0126	10690	12011			2.54	Si
SLV 5	10.65	-14435	-6810	5486.84		12848	4.0126	10903	12250			1.8	Si
SLV 13	8.55	-20476	-17767	-6234.57		18225	4.0126	11978	13458			0.76	No, Vu<V
SLV 13	10.65	-24442	-16290	14082.46		21755	4.0126	12684	14251			0.87	No, Vu<V
SLV 9	8.55	-15835	-11237	-1215		14094	4.0126	11152	12530			1.12	Si
SLV 9	10.65	-19039	-12158	10636.04		16946	4.0126	11722	13171			1.08	Si

Verifica a pressoflessione fuori piano D.M. 17-01-18 (N.T.C.)

quota 10.3 Wa 0.05 denominatore 8 γM = 2

Comb.	fd	Sa	σ0	N	M	Mc	Coeff.s.	Verifica
SLV 1	143750	0.46	8529	-9583	496.14	1247.97	2.52	Si
SLV 2	143750	0.46	8529	-9583	496.14	1247.97	2.52	Si
SLV 3	143750	0.46	8845	-9937	496.14	1290.5	2.6	Si
SLV 4	143750	0.46	8845	-9937	496.14	1290.5	2.6	Si
SLV 5	143750	0.46	12574	-14128	496.14	1774.36	3.58	Si
SLV 6	143750	0.46	12574	-14128	496.14	1774.36	3.58	Si
SLV 7	143750	0.46	13625	-15309	496.14	1904.2	3.84	Si
SLV 8	143750	0.46	13625	-15309	496.14	1904.2	3.84	Si
SLV 10	143750	0.46	16357	-18378	496.14	2228.45	4.49	Si
SLV 9	143750	0.46	16357	-18378	496.14	2228.45	4.49	Si

Verifica dei meccanismi locali di collasso con analisi cinematica lineare

forza di aggancio al piano = 0 quota mezzeria = 10.3 Wa = 0.05 Ta = 0.0731

Comb.	N top	N base	V orto	α0	M*	e*	a0*	aLim	Verifica
SLV 8	-12490	-17850	-643	0.009	1836.8	0.921	0.13733	9.02602	No
SLV 7	-12490	-17850	-643	0.009	1836.8	0.921	0.13733	9.02602	No
SLV 6	-12305	-13240	605	0.011	1818.2	0.92	0.17009	9.02602	No
SLV 5	-12305	-13240	605	0.011	1818.2	0.92	0.17009	9.02602	No
SLV 10	-14012	-15835	639	0.012	1989.7	0.926	0.18288	9.02602	No
SLV 9	-14012	-15835	639	0.012	1989.7	0.926	0.18288	9.02602	No
SLV 11	-14198	-20445	-609	0.014	2008.4	0.926	0.21436	9.02602	No
SLV 12	-14198	-20445	-609	0.014	2008.4	0.926	0.21436	9.02602	No
SLV 4	-10434	-13209	-247	0.032	1630.9	0.914	0.51657	10.21601	No
SLV 3	-10434	-13209	-247	0.032	1630.9	0.914	0.51657	10.21601	No

Tabella dei coefficienti di sicurezza minimi

Stato limite	Coeff.s.	Comb.	Verifica
PF_SLU	4.649	SLU 77	Si
V_SLU	0.827	SLU 83	No
PF_SLV	2.862	SLV 13	Si

Stato limite	Coeff.s.	Comb.	Verifica
V_SLV	0.757	SLV 13	No
PFFP_SLV	2.515	SLV 1	Si
R_SLV	0.015	SLV 7	No

Maschio 189

Verifiche condotte secondo D.M. 17-01-18 (N.T.C.)

Dati geometrici

X ini.	Y ini.	X fin.	Y fin.	Quota i.	Quota.s	l	Sp.	h netta	h ini.	h fin.	a	a.s.,sx	a.s.,dx
-10.74	3.3	-15.01	3.3	L5	L6	4.27	0.14	3.5	3.5	3.5			

Caratteristiche del materiale

(Circolare 7 21-01-19 C8.5.I) Muratura in mattoni pieni e malta di calce LC2_Corti

fb	fk	fvk0	fmedio	τ0	fv0	μ	ϕ	fv,lim	E	G	FC
600000			345000	9000	20000	0.58	0.77	32500	320000000	128000000	1.2

Verifica a pressoflessione nel piano secondo D.M. 17-01-18 NTC §7.8.2.2.1 in combinazioni non sismiche, γM = 3

Comb.	Quota	N	M	σ0	Mu	c.s.	Verifica
SLU 49	8.55	-18906	-759.2	31626	24692.63	32.525	Si
SLU 49	10.45	-15236	-2688.82	25487	22350.89	8.313	Si
SLU 48	8.55	-18924	-754.26	31656	24701.41	32.749	Si
SLU 48	10.45	-15251	-2691.1	25511	22362.72	8.31	Si
SLU 70	8.55	-20640	-991.38	34527	25388.44	25.609	Si
SLU 70	10.45	-17016	-2841.28	28464	23634.22	8.318	Si
SLU 50	8.55	-18364	-619.59	30719	24421.1	39.415	Si
SLU 50	10.45	-14673	-2588.03	24546	21887.49	8.457	Si
SLU 71	8.55	-20098	-851.78	33621	25199.35	29.585	Si
SLU 71	10.45	-16453	-2740.49	27523	23258.64	8.487	Si
SLU 69	8.55	-20659	-986.44	34558	25394.42	25.743	Si
SLU 69	10.45	-17031	-2843.57	28489	23643.74	8.315	Si
SLU 78	8.55	-22190	-1314.26	37119	25786.9	19.621	Si
SLU 78	10.45	-18707	-2896.74	31294	24596.3	8.491	Si
SLU 72	8.55	-20080	-856.71	33590	25192.47	29.406	Si
SLU 72	10.45	-16438	-2738.21	27498	23248.37	8.49	Si
SLU 51	8.55	-18345	-624.53	30688	24411.4	39.088	Si
SLU 51	10.45	-14658	-2585.74	24521	21874.9	8.46	Si
SLU 77	8.55	-22208	-1309.33	37150	25790.38	19.697	Si
SLU 77	10.45	-18722	-2899.02	31319	24603.62	8.487	Si

Verifica a pressoflessione nel piano secondo D.M. 17-01-18 NTC §7.8.2.2.1 in combinazioni sismiche, γM = 2

Comb.	Quota	N	M	σ0	Mu	c.s.	Verifica
SLV 13	8.55	-15324	-3855.28	25635	25853.33	6.706	Si
SLV 13	10.45	-10178	4340.81	17025	18701.59	4.308	Si
SLV 16	8.55	-16390	-2937.47	27417	27140.37	9.239	Si
SLV 16	10.45	-11090	4328.59	18551	20082.1	4.639	Si
SLV 1	8.55	-13332	1358.44	22303	23269.01	17.129	Si
SLV 1	10.45	-13330	-8213.07	22299	23265.95	2.833	Si
SLV 3	8.55	-14398	2276.26	24085	24680.12	10.842	Si
SLV 3	10.45	-14242	-8225.29	23825	24478.35	2.976	Si
SLV 6	8.55	-12787	-1537.15	21390	22520.4	14.651	Si
SLV 6	10.45	-11163	-3804.95	18673	20189.92	5.306	Si
SLV 5	8.55	-12787	-1537.15	21390	22520.4	14.651	Si
SLV 5	10.45	-11163	-3804.95	18673	20189.92	5.306	Si
SLV 4	8.55	-14398	2276.26	24085	24680.12	10.842	Si
SLV 4	10.45	-14242	-8225.29	23825	24478.35	2.976	Si
SLV 2	8.55	-13332	1358.44	22303	23269.01	17.129	Si
SLV 2	10.45	-13330	-8213.07	22299	23265.95	2.833	Si
SLV 14	8.55	-15324	-3855.28	25635	25853.33	6.706	Si
SLV 14	10.45	-10178	4340.81	17025	18701.59	4.308	Si
SLV 15	8.55	-16390	-2937.47	27417	27140.37	9.239	Si
SLV 15	10.45	-11090	4328.59	18551	20082.1	4.639	Si

Verifica a taglio nel piano secondo D.M. 17-01-18 (N.T.C.) §7.8.2.2.2 con rottura per scorrimento in combinazioni non sismiche, γM = 3

Comb.	Quota	N	V par	M	σ0	σN	l'	fvd	Vt scorr.	Vt fess.diag.	Vt,lim	c.s.	Verifica
SLU 43	8.55	-17505	-68	-740.6		29283	4.27	9460	5655			83.04	Si
SLU 43	10.45	-13973	-68	-2395.41		23375	4.27	8672	5184			76.19	Si
SLU 45	8.55	-18495	-72	-814.76		30938	4.27	9681	5787			80.02	Si
SLU 45	10.45	-14901	-72	-2594.79		24926	4.27	8879	5308			73.44	Si
SLU 72	8.55	-20080	-72	-856.71		33590	4.27	10034	5998			83.35	Si
SLU 72	10.45	-16438	-72	-2738.21		27498	4.27	9222	5513			76.58	Si
SLU 46	8.55	-18476	-72	-819.7		30907	4.27	9677	5785			80.3	Si
SLU 46	10.45	-14886	-72	-2592.51		24901	4.27	8876	5306			73.67	Si
SLU 50	8.55	-18364	-81	-619.59		30719	4.27	9651	5770			70.85	Si
SLU 50	10.45	-14673	-81	-2588.03		24546	4.27	8828	5278			64.85	Si
SLU 49	8.55	-18906	-79	-759.2		31626	4.27	9772	5842			74.23	Si
SLU 49	10.45	-15236	-79	-2688.82		25487	4.27	8954	5353			68.02	Si
SLU 71	8.55	-20098	-72	-851.78		33621	4.27	10038	6001			83.05	Si
SLU 71	10.45	-16453	-72	-2740.49		27523	4.27	9225	5515			76.34	Si
SLU 48	8.55	-18924	-79	-754.26		31656	4.27	9776	5844			73.99	Si
SLU 48	10.45	-15251	-79	-2691.1		25511	4.27	8957	5355			67.83	Si
SLU 51	8.55	-18345	-81	-624.53		30688	4.27	9647	5767			71.08	Si
SLU 51	10.45	-14658	-81	-2585.74		24521	4.27	8825	5276			65.03	Si
SLU 47	8.55	-17904	-74	-688.31		29949	4.27	9549	5708			76.84	Si
SLU 47	10.45	-14299	-74	-2487.91		23919	4.27	8745	5228			70.36	Si

Verifica a taglio nel piano secondo D.M. 17-01-18 (N.T.C.) §7.8.2.2.2 con rottura per scorrimento in combinazioni sismiche, γM = 2

Comb.	Quota	N	V par	M	σ0	σN	l'	fvd	Vt scorr.	Vt fess.diag.	Vt,lim	c.s.	Verifica
SLV 9	8.55	-13384	-2236	-3101.27		22389	4.27	12811	7658			3.42	Si
SLV 9	10.45	-10217	-2416	-38.78		17091	4.27	11751	7025			2.91	Si
SLV 1	8.55	-13332	8025	1358.44		22303	4.27	12794	7648			0.95	No, Vu<V
SLV 1	10.45	-13330	7024	-8213.07		22299	4.27	12793	7648			1.09	Si
SLV 3	8.55	-14398	7901	2276.26		24085	4.27	13150	7861			1	No, Vu<V
SLV 3	10.45	-14242	7165	-8225.29		23825	4.27	13098	7830			1.09	Si
SLV 4	8.55	-14398	7901	2276.26		24085	4.27	13150	7861			1	No, Vu<V
SLV 4	10.45	-14242	7165	-8225.29		23825	4.27	13098	7830			1.09	Si
SLV 16	8.55	-16390	-8109	-2937.47		27417	4.27	13817	8260			1.02	Si
SLV 16	10.45	-11090	-7108	4328.59		18551	4.27	12044	7200			1.01	Si
SLV 10	8.55	-13384	-2236	-3101.27		22389	4.27	12811	7658			3.42	Si
SLV 10	10.45	-10217	-2416	-38.78		17091	4.27	11751	7025			2.91	Si
SLV 14	8.55	-15324	-7985	-3855.28		25635	4.27	13460	8047			1.01	Si
SLV 14	10.45	-10178	-7248	4340.81		17025	4.27	11738	7017			0.97	No, Vu<V
SLV 15	8.55	-16390	-8109	-2937.47		27417	4.27	13817	8260			1.02	Si
SLV 15	10.45	-11090	-7108	4328.59		18551	4.27	12044	7200			1.01	Si
SLV 2	8.55	-13332	8025	1358.44		22303	4.27	12794	7648			0.95	No, Vu<V
SLV 2	10.45	-13330	7024	-8213.07		22299	4.27	12793	7648			1.09	Si
SLV 13	8.55	-15324	-7985	-3855.28		25635	4.27	13460	8047			1.01	Si
SLV 13	10.45	-10178	-7248	4340.81		17025	4.27	11738	7017			0.97	No, Vu<V

Verifica a pressoflessione fuori piano D.M. 17-01-18 (N.T.C.)

quota 10.3 Wa 0.03 denominatore 8 γM = 2

Comb.	fd	Sa	σ0	N	M	Mc	Coeff.s.	Verifica
SLV 13	143750	0.46	17025	-10178	251.98	613.17	2.43	Si
SLV 14	143750	0.46	17025	-10178	251.98	613.17	2.43	Si
SLV 10	143750	0.46	17091	-10217	251.98	615.14	2.44	Si
SLV 9	143750	0.46	17091	-10217	251.98	615.14	2.44	Si
SLV 16	143750	0.46	18551	-11090	251.98	658.43	2.61	Si
SLV 15	143750	0.46	18551	-11090	251.98	658.43	2.61	Si
SLV 6	143750	0.46	18673	-11163	251.98	661.97	2.63	Si
SLV 5	143750	0.46	18673	-11163	251.98	661.97	2.63	Si
SLV 11	143750	0.46	22177	-13258	251.98	759.59	3.01	Si
SLV 12	143750	0.46	22177	-13258	251.98	759.59	3.01	Si

Verifica dei meccanismi locali di collasso con analisi cinematica lineare

forza di aggancio al piano = 0 quota mezzeria = 10.3 Wa = 0.03 Ta = 0.1461

Comb.	N top	N base	V orto	α0	M*	e*	a0*	aLim	Verifica
SLV 5	-8193	-12787	234	0	1133	0.929	0.00769	18.80115	No
SLV 6	-8193	-12787	234	0	1133	0.929	0.00769	18.80115	No
SLV 9	-8193	-13384	223	0.002	1133	0.929	0.02524	18.80115	No
SLV 10	-8193	-13384	223	0.002	1133	0.929	0.02524	18.80115	No
SLV 11	-10369	-16936	-234	0.004	1352.9	0.939	0.06126	18.80115	No
SLV 12	-10369	-16936	-234	0.004	1352.9	0.939	0.06126	18.80115	No
SLV 7	-10370	-16338	-223	0.005	1353	0.939	0.07557	18.80115	No
SLV 8	-10370	-16338	-223	0.005	1353	0.939	0.07557	18.80115	No
SLV 1	-8956	-13332	87	0.015	1210	0.933	0.23999	18.99716	No
SLV 2	-8956	-13332	87	0.015	1210	0.933	0.23999	18.99716	No

Tabella dei coefficienti di sicurezza minimi

Stato limite	Coeff.s.	Comb.	Verifica
PF_SLU	8.31	SLU 48	Si
V_SLU	64.855	SLU 50	Si
PF_SLV	2.833	SLV 1	Si
V_SLV	0.953	SLV 1	No
PFFP_SLV	2.433	SLV 13	Si
R_SLV	0	SLV 5	No

Maschio 190

Verifiche condotte secondo D.M. 17-01-18 (N.T.C.)

Dati geometrici

X ini.	Y ini.	X fin.	Y fin.	Quota i.	Quota.s	l	Sp.	h netta	h ini.	h fin.	a	a.s.,sx	a.s.,dx
-9.72	3.3	-9.94	3.3	L5	L6	0.22	0.14	3.5	3.5	3.5			

Caratteristiche del materiale

(Circolare 7 21-01-19 C8.5.I) Muratura in mattoni pieni e malta di calce LC2_Corti

fb	fk	fvk0	fmedio	τ0	fv0	μ	ϕ	fv,lim	E	G	FC
600000			345000	9000	20000	0.58	0.77	32500	320000000	128000000	1.2

Verifica a pressoflessione nel piano secondo D.M. 17-01-18 NTC §7.8.2.2.1 in combinazioni non sismiche, γM = 3

Comb.	Quota	N	M	σ0	Mu	c.s.	Verifica
SLU 49	8.55	-1556	32.02	50533	65	2.03	Si
SLU 49	10.45	-590	-20.49	19141	49.61	2.421	Si
SLU 47	8.55	-1474	30.15	47859	66.88	2.218	Si
SLU 47	10.45	-557	-19.37	18077	47.65	2.46	Si
SLU 45	8.55	-1494	29.55	48506	66.48	2.25	Si
SLU 45	10.45	-596	-18.3	19360	50	2.732	Si
SLU 70	8.55	-1633	28.33	53015	62.72	2.214	Si
SLU 70	10.45	-750	-15.94	24339	57.82	3.628	Si
SLU 69	8.55	-1635	28.43	53090	62.64	2.203	Si
SLU 69	10.45	-749	-16.02	24327	57.81	3.607	Si
SLU 72	8.55	-1617	29.1	52493	63.24	2.173	Si

Comb.	Quota	N	M	σ0	Mu	c.s.	Verifica
SLU 72	10.45	-709	-17.15	23036	55.97	3.264	Si
SLU 50	8.55	-1543	32.89	50086	65.35	1.987	Si
SLU 50	10.45	-549	-21.78	17824	47.17	2.166	Si
SLU 48	8.55	-1559	32.12	50608	64.94	2.021	Si
SLU 48	10.45	-589	-20.57	19128	49.59	2.41	Si
SLU 71	8.55	-1619	29.2	52568	63.17	2.163	Si
SLU 71	10.45	-709	-17.23	23023	55.96	3.247	Si
SLU 51	8.55	-1540	32.79	50011	65.41	1.995	Si
SLU 51	10.45	-549	-21.7	17837	47.2	2.175	Si

Verifica a pressoflessione nel piano secondo D.M. 17-01-18 NTC §7.8.2.2.1 in combinazioni sismiche, γM = 2

Comb.	Quota	N	M	σ0	Mu	c.s.	Verifica
SLV 7	8.55	-1893	59.08	61451	103.49	1.752	Si
SLV 7	10.45	-215	-42.34	0	0	0	No, e>l/2
SLV 2	8.55	-2335	127.1	75802	97.49	0.767	No, M>Mu
SLV 2	10.45	421	-68.17	0	0	0	No, Trazione
SLV 1	8.55	-2335	127.1	75802	97.49	0.767	No, M>Mu
SLV 1	10.45	421	-68.17	0	0	0	No, Trazione
SLV 13	8.55	284	-97.72	0	0	0	No, Trazione
SLV 13	10.45	-1614	60.17	52413	101.4	1.685	Si
SLV 3	8.55	-2554	132.02	82915	90.29	0.684	No, M>Mu
SLV 3	10.45	456	-76.98	0	0	0	No, Trazione
SLV 15	8.55	65	-92.8	0	0	0	No, Trazione
SLV 15	10.45	-1579	51.36	51275	100.82	1.963	Si
SLV 16	8.55	65	-92.8	0	0	0	No, Trazione
SLV 16	10.45	-1579	51.36	51275	100.82	1.963	Si
SLV 4	8.55	-2554	132.02	82915	90.29	0.684	No, M>Mu
SLV 4	10.45	456	-76.98	0	0	0	No, Trazione
SLV 8	8.55	-1893	59.08	61451	103.49	1.752	Si
SLV 8	10.45	-215	-42.34	0	0	0	No, e>l/2
SLV 14	8.55	284	-97.72	0	0	0	No, Trazione
SLV 14	10.45	-1614	60.17	52413	101.4	1.685	Si

Verifica a taglio nel piano secondo D.M. 17-01-18 (N.T.C.) §7.8.2.2.2 con rottura per scorrimento in combinazioni non sismiche, γM = 3

Comb.	Quota	N	V par	M	σ0	σN	I'	fvd	Vt scorr.	Vt fess.diag.	Vt,lim	c.s.	Verifica
SLU 46	8.55	-1492	70	29.45		48431	0.22	10833	334			4.8	Si
SLU 46	10.45	-597	69	-18.22		19372	0.22	8139	251			3.64	Si
SLU 48	8.55	-1559	77	32.12		50608	0.22	10833	334			4.36	Si
SLU 48	10.45	-589	76	-20.57		19128	0.22	8106	250			3.29	Si
SLU 43	8.55	-1413	65	27.75		45882	0.22	10833	334			5.1	Si
SLU 43	10.45	-563	65	-17.24		18288	0.22	7994	246			3.79	Si
SLU 50	8.55	-1543	79	32.89		50086	0.22	10833	334			4.23	Si
SLU 50	10.45	-549	78	-21.78		18587	0.211	8034	237			3.03	Si
SLU 44	8.55	-1409	65	27.58		45757	0.22	10833	334			5.13	Si
SLU 44	10.45	-564	64	-17.09		18309	0.22	7997	246			3.82	Si
SLU 49	8.55	-1556	76	32.02		50533	0.22	10833	334			4.38	Si
SLU 49	10.45	-590	76	-20.49		19141	0.22	8108	250			3.3	Si
SLU 45	8.55	-1494	70	29.55		48506	0.22	10833	334			4.78	Si
SLU 45	10.45	-596	69	-18.3		19360	0.22	8137	251			3.62	Si
SLU 8	8.55	-1237	61	25.52		40152	0.22	10833	334			5.43	Si
SLU 8	10.45	-461	61	-16.6		14975	0.22	7552	233			3.82	Si
SLU 47	8.55	-1474	72	30.15		47859	0.22	10833	334			4.65	Si
SLU 47	10.45	-557	71	-19.37		18077	0.22	7966	245			3.44	Si
SLU 51	8.55	-1540	79	32.79		50011	0.22	10833	334			4.24	Si
SLU 51	10.45	-549	78	-21.7		18552	0.2115	8029	238			3.04	Si

Verifica a taglio nel piano secondo D.M. 17-01-18 (N.T.C.) §7.8.2.2.2 con rottura per scorrimento in combinazioni sismiche, γM = 2

Comb.	Quota	N	V par	M	σ0	σN	I'	fvd	Vt scorr.	Vt fess.diag.	Vt,lim	c.s.	Verifica
SLV 16	8.55	65	-263	-92.8		0	0	8333	0			0	No, Vu<V
SLV 16	10.45	-1579	-95	51.36		51275	0.22	16250	501			5.26	Si
SLV 2	8.55	-2335	343	127.1		100046	0.1667	16250	379			1.11	Si
SLV 2	10.45	421	174	-68.17		0	0	8333	0			0	No, Vu<V
SLV 15	8.55	65	-263	-92.8		0	0	8333	0			0	No, Vu<V
SLV 15	10.45	-1579	-95	51.36		51275	0.22	16250	501			5.26	Si
SLV 8	8.55	-1893	214	59.08		61451	0.22	16250	501			2.34	Si
SLV 8	10.45	-215	149	-42.34		0	0	8333	0			0	No, Vu<V
SLV 3	8.55	-2554	389	132.02		104289	0.1749	16250	398			1.02	Si
SLV 3	10.45	456	212	-76.98		0	0	8333	0			0	No, Vu<V
SLV 13	8.55	284	-309	-97.72		0	0	8333	0			0	No, Vu<V
SLV 13	10.45	-1614	-133	60.17		52849	0.2182	16250	496			3.73	Si
SLV 1	8.55	-2335	343	127.1		100046	0.1667	16250	379			1.11	Si
SLV 1	10.45	421	174	-68.17		0	0	8333	0			0	No, Vu<V
SLV 7	8.55	-1893	214	59.08		61451	0.22	16250	501			2.34	Si
SLV 7	10.45	-215	149	-42.34		0	0	8333	0			0	No, Vu<V
SLV 4	8.55	-2554	389	132.02		104289	0.1749	16250	398			1.02	Si
SLV 4	10.45	456	212	-76.98		0	0	8333	0			0	No, Vu<V
SLV 14	8.55	284	-309	-97.72		0	0	8333	0			0	No, Vu<V
SLV 14	10.45	-1614	-133	60.17		52849	0.2182	16250	496			3.73	Si

Verifica a pressoflessione fuori piano D.M. 17-01-18 (N.T.C.)

quota 10.3 Wa 0.03 denominatore 8 γM = 2

Comb.	fd	Sa	σ0	N	M	Mc	Coeff.s.	Verifica
SLV 1	143750	0.46	0	421	12.98	0	0	No, Trazione
SLV 4	143750	0.46	0	456	12.98	0	0	No, Trazione
SLV 2	143750	0.46	0	421	12.98	0	0	No, Trazione
SLV 3	143750	0.46	0	456	12.98	0	0	No, Trazione
SLV 8	143750	0.46	6989	-215	12.98	14.21	1.09	Si
SLV 7	143750	0.46	6989	-215	12.98	14.21	1.09	Si
SLV 6	143750	0.46	10783	-332	12.98	21.2	1.63	Si

Comb.	fd	Sa	σ0	N	M	Mc	Coeff.s.	Verifica
SLV 5	143750	0.46	10783	-332	12.98	21.2	1.63	Si
SLV 11	143750	0.46	26816	-826	12.98	45.13	3.48	Si
SLV 12	143750	0.46	26816	-826	12.98	45.13	3.48	Si

Verifica dei meccanismi locali di collasso con analisi cinematica lineare

forza di aggancio al piano = 0 quota mezzeria = 10.3 Wa = 0.03 Ta = 0.1461

Comb.	N top	N base	V orto	α0	M*	e*	a0*	aLim	Verifica
SLV 15	-66	65	-4	0	0	0	0	18.99716	No, Trazione
SLV 13	28	284	-2	0	0	0	0	18.99716	No, Trazione
SLV 14	28	284	-2	0	0	0	0	18.99716	No, Trazione
SLV 16	-66	65	-4	0	0	0	0	18.99716	No, Trazione
SLV 5	-332	-1162	5	0.012	49.3	0.919	0.19734	18.80115	No
SLV 6	-332	-1162	5	0.012	49.3	0.919	0.19734	18.80115	No
SLV 12	-428	-1107	-5	0.014	59	0.93	0.21693	18.80115	No
SLV 11	-428	-1107	-5	0.014	59	0.93	0.21693	18.80115	No
SLV 9	-115	-377	3	0.014	28	0.89	0.2218	18.80115	No
SLV 10	-115	-377	3	0.014	28	0.89	0.2218	18.80115	No

Tabella dei coefficienti di sicurezza minimi

Stato limite	Coeff.s.	Comb.	Verifica
PF_SLU	1.987	SLU 50	Si
V_SLU	3.029	SLU 50	Si
PF_SLV	0	SLV 16	No
V_SLV	0	SLV 1	No
PFFP_SLV	0	SLV 4	No
R_SLV	0	SLV 16	No

Maschio 191

Verifiche condotte secondo D.M. 17-01-18 (N.T.C.)

Dati geometrici

X ini.	Y ini.	X fin.	Y fin.	Quota i.	Quota.s	l	Sp.	h netta	h ini.	h fin.	a	a.s.,sx	a.s.,dx
-11.003	-4.697	-11.003	-3.309	L5	Z medio 1024 cm	1.388	0.28	1.69	1.69	1.69			

Caratteristiche del materiale

(Circolare 7 21-01-19 C8.5.I) Muratura in mattoni pieni e malta di calce LC2_Corti

fb	fk	fvk0	fmedio	τ0	fv0	μ	ϕ	fv,lim	E	G	FC
600000			345000	9000	20000	0.58	0.77	32500	320000000	128000000	1.2

Verifica a pressoflessione nel piano secondo D.M. 17-01-18 NTC §7.8.2.2.1 in combinazioni non sismiche, γM = 3

Comb.	Quota	N	M	σ0	Mu	c.s.	Verifica
SLU 18	8.55	-7965	157.99	20499	4135.62	26.177	Si
SLU 18	10.24	-6181	314.25	15908	3451.12	10.982	Si
SLU 81	8.55	-10490	216.04	26997	4866.03	22.524	Si
SLU 81	10.24	-8117	374.95	20890	4187.5	11.168	Si
SLU 42	8.55	-8899	211	22904	4438.54	21.036	Si
SLU 42	10.24	-7009	314.27	18040	3786.34	12.048	Si
SLU 39	8.55	-8672	191.39	22318	4368.22	22.824	Si
SLU 39	10.24	-6742	360	17352	3681.43	10.226	Si
SLU 82	8.55	-10494	221.94	27007	4866.95	21.929	Si
SLU 82	10.24	-8142	358.06	20955	4196.06	11.719	Si
SLU 40	8.55	-8675	197.3	22328	4369.46	22.147	Si
SLU 40	10.24	-6767	343.11	17417	3691.53	10.759	Si
SLU 41	8.55	-8895	205.1	22894	4437.34	21.635	Si
SLU 41	10.24	-6984	331.16	17975	3776.52	11.404	Si
SLU 19	8.55	-7969	163.89	20509	4136.98	25.242	Si
SLU 19	10.24	-6206	297.36	15973	3461.84	11.642	Si
SLU 60	8.55	-9783	182.63	25178	4689.77	25.678	Si
SLU 60	10.24	-7556	329.21	19446	3991	12.123	Si
SLU 83	8.55	-10714	229.75	27573	4917.3	21.403	Si
SLU 83	10.24	-8359	346.12	21513	4267.99	12.331	Si

Verifica a pressoflessione nel piano secondo D.M. 17-01-18 NTC §7.8.2.2.1 in combinazioni sismiche, γM = 2

Comb.	Quota	N	M	σ0	Mu	c.s.	Verifica
SLV 5	8.55	-9860	-663.66	25376	5420.35	8.167	Si
SLV 5	10.24	-6848	693.32	17625	4066.09	5.865	Si
SLV 6	8.55	-9860	-663.66	25376	5420.35	8.167	Si
SLV 6	10.24	-6848	693.32	17625	4066.09	5.865	Si
SLV 15	8.55	-6751	784.95	17374	4017.84	5.119	Si
SLV 15	10.24	-5452	-233.96	14032	3348.55	14.312	Si
SLV 2	8.55	-7829	-510.12	20148	4536.11	8.892	Si
SLV 2	10.24	-5699	549.2	14666	3479.35	6.335	Si
SLV 12	8.55	-4719	938.49	12146	2949.01	3.142	Si
SLV 12	10.24	-4303	-378.09	11074	2714.91	7.181	Si
SLV 8	8.55	-4566	670	11752	2863.61	4.274	Si
SLV 8	10.24	-4132	-225.86	10635	2617.63	11.589	Si
SLV 7	8.55	-4566	670	11752	2863.61	4.274	Si
SLV 7	10.24	-4132	-225.86	10635	2617.63	11.589	Si
SLV 16	8.55	-6751	784.95	17374	4017.84	5.119	Si
SLV 16	10.24	-5452	-233.96	14032	3348.55	14.312	Si
SLV 1	8.55	-7829	-510.12	20148	4536.11	8.892	Si
SLV 1	10.24	-5699	549.2	14666	3479.35	6.335	Si
SLV 11	8.55	-4719	938.49	12146	2949.01	3.142	Si
SLV 11	10.24	-4303	-378.09	11074	2714.91	7.181	Si

Verifica a taglio nel piano secondo D.M. 17-01-18 (N.T.C.) §7.8.2.2.2 con rottura per scorrimento in combinazioni non sismiche, γM = 3

Comb.	Quota	N	V par	M	σ0	σN	l'	fvd	Vt scorr.	Vt fess.diag.	Vt,lim	c.s.	Verifica
SLU 30	8.55	-8027	308	187.06		20658	1.3877	8310	3229			10.49	Si
SLU 30	10.24	-6294	346	73.31		16199	1.3877	7715	2998			8.66	Si
SLU 9	8.55	-7320	322	153.65		18840	1.3877	8068	3135			9.74	Si
SLU 9	10.24	-5733	374	27.56		14755	1.3877	7523	2923			7.81	Si
SLU 50	8.55	-9134	251	172.4		23509	1.3877	8690	3377			13.45	Si
SLU 50	10.24	-7082	328	59.41		18228	1.3877	7986	3103			9.47	Si
SLU 49	8.55	-9206	310	184.12		23692	1.3877	8715	3386			10.92	Si
SLU 49	10.24	-7163	361	55.02		18435	1.3877	8014	3114			8.63	Si
SLU 72	8.55	-9845	319	211.71		25338	1.3877	8934	3471			10.88	Si
SLU 72	10.24	-7669	365	88.26		19737	1.3877	8187	3181			8.72	Si
SLU 70	8.55	-9912	296	217.53		25511	1.3877	8957	3480			11.75	Si
SLU 70	10.24	-7724	333	100.77		19879	1.3877	8206	3188			9.59	Si
SLU 7	8.55	-7387	299	159.47		19013	1.3877	8091	3144			10.52	Si
SLU 7	10.24	-5788	342	40.07		14897	1.3877	7542	2930			8.56	Si
SLU 51	8.55	-9138	333	178.3		23519	1.3877	8691	3377			10.14	Si
SLU 51	10.24	-7108	393	42.51		18293	1.3877	7995	3106			7.91	Si
SLU 28	8.55	-8094	285	192.88		20832	1.3877	8333	3238			11.36	Si
SLU 28	10.24	-6349	314	85.81		16341	1.3877	7734	3005			9.57	Si
SLU 8	8.55	-7316	240	147.75		18829	1.3877	8066	3134			13.07	Si
SLU 8	10.24	-5708	309	44.45		14690	1.3877	7514	2920			9.44	Si

Verifica a taglio nel piano secondo D.M. 17-01-18 (N.T.C.) §7.8.2.2.2 con rottura per scorrimento in combinazioni sismiche, γM = 2

Comb.	Quota	N	V par	M	σ0	σN	l'	fvd	Vt scorr.	Vt fess.diag.	Vt,lim	c.s.	Verifica
SLV 16	8.55	-6751	3860	784.95		17374	1.3877	11808	4588			1.19	Si
SLV 16	10.24	-5452	3519	-233.96		14032	1.3877	11140	4328			1.23	Si
SLV 15	8.55	-6751	3860	784.95		17374	1.3877	11808	4588			1.19	Si
SLV 15	10.24	-5452	3519	-233.96		14032	1.3877	11140	4328			1.23	Si
SLV 7	8.55	-4566	2163	670		11752	1.3877	10684	4151			1.92	Si
SLV 7	10.24	-4132	1871	-225.86		10635	1.3877	10460	4064			2.17	Si
SLV 2	8.55	-7829	-3875	-510.12		20148	1.3877	12363	4804			1.24	Si
SLV 2	10.24	-5699	-3573	549.2		14666	1.3877	11267	4378			1.23	Si
SLV 11	8.55	-4719	3933	938.49		12146	1.3877	10763	4182			1.06	Si
SLV 11	10.24	-4303	3509	-378.09		11074	1.3877	10548	4098			1.17	Si
SLV 12	8.55	-4719	3933	938.49		12146	1.3877	10763	4182			1.06	Si
SLV 12	10.24	-4303	3509	-378.09		11074	1.3877	10548	4098			1.17	Si
SLV 8	8.55	-4566	2163	670		11752	1.3877	10684	4151			1.92	Si
SLV 8	10.24	-4132	1871	-225.86		10635	1.3877	10460	4064			2.17	Si
SLV 1	8.55	-7829	-3875	-510.12		20148	1.3877	12363	4804			1.24	Si
SLV 1	10.24	-5699	-3573	549.2		14666	1.3877	11267	4378			1.23	Si
SLV 5	8.55	-9860	-3949	-663.66		25376	1.3877	13409	5210			1.32	Si
SLV 5	10.24	-6848	-3564	693.32		17625	1.3877	11858	4608			1.29	Si
SLV 6	8.55	-9860	-3949	-663.66		25376	1.3877	13409	5210			1.32	Si
SLV 6	10.24	-6848	-3564	693.32		17625	1.3877	11858	4608			1.29	Si

Verifica a pressoflessione fuori piano D.M. 17-01-18 (N.T.C.)

quota 9.395 Wa 0.05 denominatore 8 γM = 2

Comb.	fd	Sa	σ0	N	M	Mc	Coeff.s.	Verifica
SLV 7	143750	0.44	12229	-4751	38.36	598.63	15.61	Si
SLV 8	143750	0.44	12229	-4751	38.36	598.63	15.61	Si
SLV 11	143750	0.44	12244	-4758	38.36	599.31	15.62	Si
SLV 12	143750	0.44	12244	-4758	38.36	599.31	15.62	Si
SLV 3	143750	0.44	15404	-5985	38.36	732.28	19.09	Si
SLV 4	143750	0.44	15404	-5985	38.36	732.28	19.09	Si
SLV 16	143750	0.44	15456	-6005	38.36	734.41	19.14	Si
SLV 15	143750	0.44	15456	-6005	38.36	734.41	19.14	Si
SLV 2	143750	0.44	18141	-7049	38.36	840.29	21.9	Si
SLV 1	143750	0.44	18141	-7049	38.36	840.29	21.9	Si

Verifica dei meccanismi locali di collasso con analisi cinematica lineare

forza di aggancio al piano = 0 quota mezzeria = 9.395 Wa = 0.05 Ta = 0.017

Comb.	N top	N base	V orto	α0	M*	e*	a0*	aLim	Verifica
SLV 8	-4132	-4566	420	0.004	513.6	0.948	0.06523	4.41429	No
SLV 7	-4132	-4566	420	0.004	513.6	0.948	0.06523	4.41429	No
SLV 12	-4303	-4719	335	0.024	530.9	0.95	0.3724	4.41429	No
SLV 11	-4303	-4719	335	0.024	530.9	0.95	0.3724	4.41429	No
SLV 9	-7019	-10013	-431	0.033	807	0.965	0.49141	4.41429	No
SLV 10	-7019	-10013	-431	0.033	807	0.965	0.49141	4.41429	No
SLV 6	-6848	-9860	-346	0.043	789.7	0.965	0.64627	4.41429	No
SLV 5	-6848	-9860	-346	0.043	789.7	0.965	0.64627	4.41429	No
SLV 3	-4884	-6241	251	0.046	589.9	0.954	0.69987	4.5251	No
SLV 4	-4884	-6241	251	0.046	589.9	0.954	0.69987	4.5251	No

Tabella dei coefficienti di sicurezza minimi

Stato limite	Coeff.s.	Comb.	Verifica
PF_SLU	10.226	SLU 39	Si
V_SLU	7.806	SLU 9	Si
PF_SLV	3.142	SLV 11	Si
V_SLV	1.063	SLV 11	Si
PFFP_SLV	15.605	SLV 7	Si
R_SLV	0.015	SLV 7	No

Maschio 192

Verifiche condotte secondo D.M. 17-01-18 (N.T.C.)

Dati geometrici

X ini.	Y ini.	X fin.	Y fin.	Quota i.	Quota.s	l	Sp.	h netta	h ini.	h fin.	a	a.s.,sx	a.s.,dx
-11.003	-4.697	-11.003	-3.309	Z medio 1024 cm	L6	1.388	0.28	1.81	1.81	1.81			

Caratteristiche del materiale

(Circolare 7 21-01-19 C8.5.I) Muratura in mattoni pieni e malta di calce LC2_Corti

fb	fk	fvk0	fmedio	τ0	fv0	μ	ϕ	fv,lim	E	G	FC
600000			345000	9000	20000	0.58	0.77	32500	320000000	128000000	1.2

Verifica a pressoflessione nel piano secondo D.M. 17-01-18 NTC §7.8.2.2.1 in combinazioni non sismiche, γM = 3

Comb.	Quota	N	M	σ0	Mu	c.s.	Verifica
SLU 41	10.24	-5898	-223.84	15179	3329.59	14.875	Si
SLU 41	12.05	-4400	-31.11	11325	2628.63	84.506	Si
SLU 81	10.24	-6958	-251.76	17907	3766.25	14.96	Si
SLU 81	12.05	-5065	22.32	13035	2951.78	132.254	Si
SLU 18	10.24	-5216	-222.85	13425	3022.75	13.564	Si
SLU 18	12.05	-3787	20.68	9746	2313.17	111.832	Si
SLU 82	10.24	-6982	-245.87	17969	3775.65	15.356	Si
SLU 82	12.05	-5090	8.47	13099	2963.55	349.708	Si
SLU 42	10.24	-5922	-217.95	15241	3340.13	15.325	Si
SLU 42	12.05	-4425	-44.95	11389	2641.13	58.757	Si
SLU 20	10.24	-5463	-202.7	14061	3136.34	15.473	Si
SLU 20	12.05	-4040	-36.17	10399	2445.49	67.62	Si
SLU 39	10.24	-5651	-243.99	14543	3220.71	13.2	Si
SLU 39	12.05	-4147	25.74	10673	2500.31	97.123	Si
SLU 19	10.24	-5240	-216.96	13487	3034	13.984	Si
SLU 19	12.05	-3812	6.84	9811	2326.34	340.125	Si
SLU 40	10.24	-5675	-238.1	14605	3231.51	13.572	Si
SLU 40	12.05	-4172	11.9	10737	2513.08	211.201	Si
SLU 60	10.24	-6523	-230.61	16788	3593.18	15.581	Si
SLU 60	12.05	-4705	17.26	12109	2779.13	161.019	Si

Verifica a pressoflessione nel piano secondo D.M. 17-01-18 NTC §7.8.2.2.1 in combinazioni sismiche, γM = 2

Comb.	Quota	N	M	σ0	Mu	c.s.	Verifica
SLV 1	10.24	-4989	-884.39	12839	3097.59	3.503	Si
SLV 1	12.05	-3686	494.07	9487	2359.04	4.775	Si
SLV 3	10.24	-4288	-592.31	11035	2706.34	4.569	Si
SLV 3	12.05	-3311	233.05	8521	2137.02	9.17	Si
SLV 16	10.24	-5111	703.08	13153	3164.19	4.5	Si
SLV 16	12.05	-3587	-491.92	9233	2301.02	4.678	Si
SLV 12	10.24	-4005	590.45	10307	2544.36	4.309	Si
SLV 12	12.05	-3053	-542.71	7857	1981.95	3.652	Si
SLV 4	10.24	-4288	-592.31	11035	2706.34	4.569	Si
SLV 4	12.05	-3311	233.05	8521	2137.02	9.17	Si
SLV 2	10.24	-4989	-884.39	12839	3097.59	3.503	Si
SLV 2	12.05	-3686	494.07	9487	2359.04	4.775	Si
SLV 5	10.24	-6094	-771.75	15685	3685.64	4.776	Si
SLV 5	12.05	-4221	544.86	10863	2668.21	4.897	Si
SLV 11	10.24	-4005	590.45	10307	2544.36	4.309	Si
SLV 11	12.05	-3053	-542.71	7857	1981.95	3.652	Si
SLV 15	10.24	-5111	703.08	13153	3164.19	4.5	Si
SLV 15	12.05	-3587	-491.92	9233	2301.02	4.678	Si
SLV 6	10.24	-6094	-771.75	15685	3685.64	4.776	Si
SLV 6	12.05	-4221	544.86	10863	2668.21	4.897	Si

Verifica a taglio nel piano secondo D.M. 17-01-18 (N.T.C.) §7.8.2.2.2 con rottura per scorrimento in combinazioni non sismiche, γM = 3

Comb.	Quota	N	V par	M	σ0	σN	l'	fvd	Vt scorr.	Vt fess.diag.	Vt,lim	c.s.	Verifica
SLU 30	10.24	-5806	417	-25.01		14942	1.3877	7548	2933			7.03	Si
SLU 30	12.05	-4362	675	-128.12		11227	1.3877	7053	2740			4.06	Si
SLU 51	10.24	-6678	466	-11.63		17187	1.3877	7847	3049			6.55	Si
SLU 51	12.05	-4920	712	-136.6		12663	1.3877	7244	2815			3.95	Si
SLU 70	10.24	-7167	413	-31.74		18444	1.3877	8015	3114			7.54	Si
SLU 70	12.05	-5338	683	-108.14		13738	1.3877	7387	2870			4.2	Si
SLU 29	10.24	-5781	359	-30.9		14879	1.3877	7539	2929			8.15	Si
SLU 29	12.05	-4337	642	-114.27		11163	1.3877	7044	2737			4.26	Si
SLU 50	10.24	-6654	408	-17.52		17125	1.3877	7839	3046			7.47	Si
SLU 50	12.05	-4895	680	-122.76		12599	1.3877	7235	2811			4.14	Si
SLU 49	10.24	-6732	431	-10.59		17326	1.3877	7866	3056			7.09	Si
SLU 49	12.05	-4978	658	-113.2		12811	1.3877	7264	2822			4.29	Si
SLU 72	10.24	-7112	448	-32.77		18305	1.3877	7996	3107			6.94	Si
SLU 72	12.05	-5280	738	-131.54		13590	1.3877	7367	2863			3.88	Si
SLU 71	10.24	-7088	390	-38.66		18243	1.3877	7988	3104			7.97	Si
SLU 71	12.05	-5255	705	-117.7		13525	1.3877	7359	2859			4.05	Si
SLU 9	10.24	-5371	435	-3.86		13824	1.3877	7399	2875			6.6	Si
SLU 9	12.05	-4002	649	-133.18		10301	1.3877	6929	2692			4.15	Si
SLU 80	10.24	-7367	284	-153.73		18960	1.3877	8084	3141			11.06	Si
SLU 80	12.05	-5502	676	-113.12		14159	1.3877	7443	2892			4.28	Si

Verifica a taglio nel piano secondo D.M. 17-01-18 (N.T.C.) §7.8.2.2.2 con rottura per scorrimento in combinazioni sismiche, γM = 2

Comb.	Quota	N	V par	M	σ0	σN	l'	fvd	Vt scorr.	Vt fess.diag.	Vt,lim	c.s.	Verifica
SLV 14	10.24	-5811	1854	411.01		14957	1.3877	11325	4400			2.37	Si
SLV 14	12.05	-3963	1858	-230.89		10199	1.3877	10373	4030			2.17	Si
SLV 16	10.24	-5111	3337	703.08		13153	1.3877	10964	4260			1.28	Si
SLV 16	12.05	-3587	2953	-491.92		9233	1.3877	10180	3955			1.34	Si
SLV 13	10.24	-5811	1854	411.01		14957	1.3877	11325	4400			2.37	Si
SLV 13	12.05	-3963	1858	-230.89		10199	1.3877	10373	4030			2.17	Si
SLV 5	10.24	-6094	-3214	-771.75		15685	1.3877	11470	4457			1.39	Si
SLV 5	12.05	-4221	-2248	544.86		10863	1.3877	10506	4082			1.82	Si

Comb.	Quota	N	V par	M	σ0	σN	l'	fvd	Vt scorr.	Vt fess.diag.	Vt,lim	c.s.	Verifica
SLV 1	10.24	-4989	-3281	-884.39		12839	1.3877	10901	4236			1.29	Si
SLV 1	12.05	-3686	-2494	494.07		9487	1.3877	10231	3975			1.59	Si
SLV 15	10.24	-5111	3337	703.08		13153	1.3877	10964	4260			1.28	Si
SLV 15	12.05	-3587	2953	-491.92		9233	1.3877	10180	3955			1.34	Si
SLV 6	10.24	-6094	-3214	-771.75		15685	1.3877	11470	4457			1.39	Si
SLV 6	12.05	-4221	-2248	544.86		10863	1.3877	10506	4082			1.82	Si
SLV 11	10.24	-4005	3270	590.45		10307	1.3877	10395	4039			1.24	Si
SLV 11	12.05	-3053	2707	-542.71		7857	1.3877	9905	3848			1.42	Si
SLV 12	10.24	-4005	3270	590.45		10307	1.3877	10395	4039			1.24	Si
SLV 12	12.05	-3053	2707	-542.71		7857	1.3877	9905	3848			1.42	Si
SLV 2	10.24	-4989	-3281	-884.39		12839	1.3877	10901	4236			1.29	Si
SLV 2	12.05	-3686	-2494	494.07		9487	1.3877	10231	3975			1.59	Si

Verifica a pressoflessione fuori piano D.M. 17-01-18 (N.T.C.)

quota 11.145 Wa 0.05 denominatore 8 γM = 2

Comb.	fd	Sa	σ0	N	M	Mc	Coeff.s.	Verifica
SLV 7	143750	0.48	8903	-3459	47.65	449.03	9.42	Si
SLV 8	143750	0.48	8903	-3459	47.65	449.03	9.42	Si
SLV 3	143750	0.48	9600	-3730	47.65	481.17	10.1	Si
SLV 4	143750	0.48	9600	-3730	47.65	481.17	10.1	Si
SLV 12	143750	0.48	9617	-3737	47.65	481.97	10.12	Si
SLV 11	143750	0.48	9617	-3737	47.65	481.97	10.12	Si
SLV 2	143750	0.48	10910	-4239	47.65	540.49	11.34	Si
SLV 1	143750	0.48	10910	-4239	47.65	540.49	11.34	Si
SLV 16	143750	0.48	11979	-4654	47.65	587.74	12.34	Si
SLV 15	143750	0.48	11979	-4654	47.65	587.74	12.34	Si

Verifica dei meccanismi locali di collasso con analisi cinematica lineare

forza di aggancio al piano = 0 quota mezzeria = 11.145 Wa = 0.05 Ta = 0.0195

Comb.	N top	N base	V orto	α0	M*	e*	a0*	aLim	Verifica
SLV 14	-3963	-5811	-7	0.086	503.1	0.944	1.33103	4.97445	No
SLV 13	-3963	-5811	-7	0.086	503.1	0.944	1.33103	4.97445	No
SLV 1	-3686	-4989	4	0.088	475.1	0.941	1.3551	4.97445	No
SLV 2	-3686	-4989	4	0.088	475.1	0.941	1.3551	4.97445	No
SLV 9	-4304	-6341	-6	0.086	537.7	0.947	1.31979	4.83359	No
SLV 10	-4304	-6341	-6	0.086	537.7	0.947	1.31979	4.83359	No
SLV 16	-3587	-5111	-5	0.088	465.1	0.94	1.35844	4.97445	No
SLV 15	-3587	-5111	-5	0.088	465.1	0.94	1.35844	4.97445	No
SLV 4	-3311	-4288	7	0.088	437.1	0.937	1.36651	4.97445	No
SLV 3	-3311	-4288	7	0.088	437.1	0.937	1.36651	4.97445	No

Tabella dei coefficienti di sicurezza minimi

Stato limite	Coeff.s.	Comb.	Verifica
PF_SLU	13.2	SLU 39	Si
V_SLU	3.881	SLU 72	Si
PF_SLV	3.503	SLV 1	Si
V_SLV	1.235	SLV 11	Si
PFFP_SLV	9.424	SLV 7	Si
R_SLV	0.268	SLV 13	No

Maschio 193

Verifiche condotte secondo D.M. 17-01-18 (N.T.C.)

Dati geometrici

X ini.	Y ini.	X fin.	Y fin.	Quota i.	Quota.s	l	Sp.	h netta	h ini.	h fin.	a	a.s.,sx	a.s.,dx
-11.003	-3.309	-11.003	-0.354	L5	Z medio 1114 cm	2.955	0.28	2.595	1.69	3.5			

Caratteristiche del materiale

(Circolare 7 21-01-19 C8.5.I) Muratura in mattoni pieni e malta di calce LC2_Corti

fb	fk	fvk0	fmedio	τ0	fv0	μ	ϕ	fv,lim	E	G	FC
600000			345000	9000	20000	0.58	0.77	32500	320000000	128000000	1.2

Verifica a pressoflessione nel piano secondo D.M. 17-01-18 NTC §7.8.2.2.1 in combinazioni non sismiche, γM = 3

Comb.	Quota	N	M	σ0	Mu	c.s.	Verifica
SLU 66	8.55	-25746	880.77	31115	23509.89	26.692	Si
SLU 66	10.24	-19262	1364.17	23279	20326.83	14.901	Si
SLU 71	8.55	-25988	862.87	31408	23593.13	27.342	Si
SLU 71	10.24	-19402	1334.27	23449	20415.3	15.301	Si
SLU 77	8.55	-28708	881.55	34696	24350.83	27.623	Si
SLU 77	10.24	-21577	1356.5	26077	21675.02	15.979	Si
SLU 27	8.55	-21766	798.16	26306	21774.75	27.281	Si
SLU 27	10.24	-16299	1171.07	19698	18258.58	15.591	Si
SLU 70	8.55	-26175	948.47	31634	23655.53	24.941	Si
SLU 70	10.24	-19649	1309.95	23747	20568.92	15.702	Si
SLU 22	8.55	-20303	697.05	24537	20962.32	30.073	Si
SLU 22	10.24	-15145	1086.48	18303	17349.05	15.968	Si
SLU 69	8.55	-26314	908.51	31802	23701.06	26.088	Si
SLU 69	10.24	-19693	1382.4	23800	20595.87	14.899	Si
SLU 67	8.55	-25606	920.73	30947	23460.88	25.481	Si
SLU 67	10.24	-19218	1291.72	23226	20299.06	15.715	Si
SLU 64	8.55	-24851	807.4	30034	23180.35	28.71	Si
SLU 64	10.24	-18539	1297.81	22406	19858.06	15.301	Si
SLU 24	8.55	-21198	770.42	25619	21470.23	27.868	Si
SLU 24	10.24	-15867	1152.84	19176	17925.34	15.549	Si

Verifica a pressoflessione nel piano secondo D.M. 17-01-18 NTC §7.8.2.2.1 in combinazioni sismiche, γM = 2

Comb.	Quota	N	M	σ0	Mu	c.s.	Verifica
SLV 5	8.55	-23866	-1776.65	28843	26938.72	15.163	Si
SLV 5	10.24	-15141	1658.05	18299	19021.14	11.472	Si
SLV 12	8.55	-14680	2935.86	17742	18540.99	6.315	Si
SLV 12	10.24	-13672	245.41	16523	17469.1	71.184	Si
SLV 2	8.55	-20328	62.26	24567	23996.27	385.399	Si
SLV 2	10.24	-13793	1562.72	16670	17599.87	11.262	Si
SLV 6	8.55	-23866	-1776.65	28843	26938.72	15.163	Si
SLV 6	10.24	-15141	1658.05	18299	19021.14	11.472	Si
SLV 3	8.55	-17508	1513.51	21160	21389.3	14.132	Si
SLV 3	10.24	-13188	1217.88	15938	16943.9	13.913	Si
SLV 11	8.55	-14680	2935.86	17742	18540.99	6.315	Si
SLV 11	10.24	-13672	245.41	16523	17469.1	71.184	Si
SLV 7	8.55	-14467	3060.83	17484	18317.07	5.984	Si
SLV 7	10.24	-13122	508.55	15859	16872.38	33.177	Si
SLV 1	8.55	-20328	62.26	24567	23996.27	385.399	Si
SLV 1	10.24	-13793	1562.72	16670	17599.87	11.262	Si
SLV 8	8.55	-14467	3060.83	17484	18317.07	5.984	Si
SLV 8	10.24	-13122	508.55	15859	16872.38	33.177	Si
SLV 4	8.55	-17508	1513.51	21160	21389.3	14.132	Si
SLV 4	10.24	-13188	1217.88	15938	16943.9	13.913	Si

Verifica a taglio nel piano secondo D.M. 17-01-18 (N.T.C.) §7.8.2.2.2 con rottura per scorrimento in combinazioni non sismiche, γM = 3

Comb.	Quota	N	V par	M	σ0	σN	I'	fvd	Vt scorr.	Vt fess.diag.	Vt,lim	c.s.	Verifica
SLU 10	8.55	-20065	826	583.06		24250	2.9551	8789	7272			8.8	Si
SLU 10	10.24	-15168	1186	761.53		18332	2.9551	8000	6619			5.58	Si
SLU 40	8.55	-23584	711	698.51		28503	2.9551	9356	7741			10.89	Si
SLU 40	10.24	-17792	1227	977.03		21503	2.9551	8423	6969			5.68	Si
SLU 55	8.55	-25182	795	721.15		30434	2.9551	9613	7954			10	Si
SLU 55	10.24	-18994	1197	991.09		22956	2.9551	8616	7129			5.96	Si
SLU 76	8.55	-27582	879	874.79		33334	2.9551	10000	8274			9.41	Si
SLU 76	10.24	-20781	1334	1169.38		25116	2.9551	8904	7368			5.52	Si
SLU 52	8.55	-24613	862	693.41		29747	2.9551	9522	7879			9.14	Si
SLU 52	10.24	-18563	1279	972.86		22434	2.9551	8547	7072			5.53	Si
SLU 73	8.55	-27013	946	847.05		32647	2.9551	9909	8199			8.67	Si
SLU 73	10.24	-20350	1416	1151.15		24594	2.9551	8835	7310			5.16	Si
SLU 82	8.55	-28132	747	808.86		34000	2.9551	10089	8348			11.17	Si
SLU 82	10.24	-21187	1320	1188.35		25605	2.9551	8970	7422			5.62	Si
SLU 65	8.55	-24619	892	874.01		29753	2.9551	9523	7879			8.84	Si
SLU 65	10.24	-18466	1186	1177.06		22318	2.9551	8531	7059			5.95	Si
SLU 31	8.55	-22465	910	736.71		27151	2.9551	9176	7592			8.34	Si
SLU 31	10.24	-16956	1323	939.83		20492	2.9551	8288	6858			5.18	Si
SLU 34	8.55	-23034	843	764.44		27838	2.9551	9267	7668			9.1	Si
SLU 34	10.24	-17387	1241	958.06		21013	2.9551	8357	6915			5.57	Si

Verifica a taglio nel piano secondo D.M. 17-01-18 (N.T.C.) §7.8.2.2.2 con rottura per scorrimento in combinazioni sismiche, γM = 2

Comb.	Quota	N	V par	M	σ0	σN	I'	fvd	Vt scorr.	Vt fess.diag.	Vt,lim	c.s.	Verifica
SLV 4	8.55	-17508	5045	1513.51		21160	2.9551	12565	10397			2.06	Si
SLV 4	10.24	-13188	4872	1217.88		15938	2.9551	11521	9533			1.96	Si
SLV 7	8.55	-14467	9342	3060.83		17484	2.9551	11830	9789			1.05	Si
SLV 7	10.24	-13122	9441	508.55		15859	2.9551	11505	9520			1.01	Si
SLV 8	8.55	-14467	9342	3060.83		17484	2.9551	11830	9789			1.05	Si
SLV 8	10.24	-13122	9441	508.55		15859	2.9551	11505	9520			1.01	Si
SLV 12	8.55	-14680	7981	2935.86		17742	2.9551	11882	9831			1.23	Si
SLV 12	10.24	-13672	8361	245.41		16523	2.9551	11638	9630			1.15	Si
SLV 6	8.55	-23866	-7469	-1776.65		28843	2.9551	14102	11668			1.56	Si
SLV 6	10.24	-15141	-7215	1658.05		18299	2.9551	11993	9923			1.38	Si
SLV 11	8.55	-14680	7981	2935.86		17742	2.9551	11882	9831			1.23	Si
SLV 11	10.24	-13672	8361	245.41		16523	2.9551	11638	9630			1.15	Si
SLV 3	8.55	-17508	5045	1513.51		21160	2.9551	12565	10397			2.06	Si
SLV 3	10.24	-13188	4872	1217.88		15938	2.9551	11521	9533			1.96	Si
SLV 10	8.55	-24079	-8830	-1901.61		29100	2.9551	14153	11711			1.33	Si
SLV 10	10.24	-15690	-8295	1394.9		18963	2.9551	12126	10033			1.21	Si
SLV 5	8.55	-23866	-7469	-1776.65		28843	2.9551	14102	11668			1.56	Si
SLV 5	10.24	-15141	-7215	1658.05		18299	2.9551	11993	9923			1.38	Si
SLV 9	8.55	-24079	-8830	-1901.61		29100	2.9551	14153	11711			1.33	Si
SLV 9	10.24	-15690	-8295	1394.9		18963	2.9551	12126	10033			1.21	Si

Verifica a pressoflessione fuori piano D.M. 17-01-18 (N.T.C.)

quota 9.395 Wa 0.05 denominatore 8 γM = 2

Comb.	fd	Sa	σ0	N	M	Mc	Coeff.s.	Verifica
SLV 7	143750	0.44	17159	-14198	183.85	1708.54	9.29	Si
SLV 8	143750	0.44	17159	-14198	183.85	1708.54	9.29	Si
SLV 12	143750	0.44	17619	-14579	183.85	1746.71	9.5	Si
SLV 11	143750	0.44	17619	-14579	183.85	1746.71	9.5	Si
SLV 4	143750	0.44	18908	-15645	183.85	1851.4	10.07	Si
SLV 3	143750	0.44	18908	-15645	183.85	1851.4	10.07	Si
SLV 15	143750	0.44	20444	-16916	183.85	1971.97	10.73	Si
SLV 16	143750	0.44	20444	-16916	183.85	1971.97	10.73	Si
SLV 1	143750	0.44	20869	-17268	183.85	2004.57	10.9	Si
SLV 2	143750	0.44	20869	-17268	183.85	2004.57	10.9	Si

Verifica dei meccanismi locali di collasso con analisi cinematica lineare

forza di aggancio al piano = 0 quota mezzeria = 9.395 Wa = 0.05 Ta = 0.0402

Comb.	N top	N base	V orto	α0	M*	e*	a0*	aLim	Verifica
SLV 5	-15141	-23866	-217	0.047	1844.8	0.952	0.72306	5.77016	No
SLV 6	-15141	-23866	-217	0.047	1844.8	0.952	0.72306	5.77016	No
SLV 11	-13672	-14680	191	0.048	1695.6	0.949	0.74165	5.77016	No

Comb.	N top	N base	V orto	α0	M*	e*	a0*	aLim	Verifica
SLV 12	-13672	-14680	191	0.048	1695.6	0.949	0.74165	5.77016	No
SLV 2	-13793	-20328	-138	0.052	1708	0.949	0.79299	6.1501	No
SLV 1	-13793	-20328	-138	0.052	1708	0.949	0.79299	6.1501	No
SLV 10	-15690	-24079	-174	0.05	1900.6	0.953	0.76203	5.77016	No
SLV 9	-15690	-24079	-174	0.05	1900.6	0.953	0.76203	5.77016	No
SLV 16	-15019	-18218	113	0.053	1832.5	0.952	0.81603	6.1501	No
SLV 15	-15019	-18218	113	0.053	1832.5	0.952	0.81603	6.1501	No

Tabella dei coefficienti di sicurezza minimi

Stato limite	Coeff.s.	Comb.	Verifica
PF_SLU	14.899	SLU 69	Si
V_SLU	5.161	SLU 73	Si
PF_SLV	5.984	SLV 7	Si
V_SLV	1.008	SLV 7	Si
PFFP_SLV	9.293	SLV 7	Si
R_SLV	0.125	SLV 5	No

Maschio 195

Verifiche condotte secondo D.M. 17-01-18 (N.T.C.)

Dati geometrici

X ini.	Y ini.	X fin.	Y fin.	Quota i.	Quota.s	l	Sp.	h netta	h ini.	h fin.	a	a.s.,sx	a.s.,dx
-11.003	-0.354	-11.003	0	L5	L6	0.354	0.28	3.5	3.5	3.5			

Caratteristiche del materiale

(Circolare 7 21-01-19 C8.5.I) Muratura in mattoni pieni e malta di calce LC2_Corti

fb	fk	fvk0	fmedio	τ0	fv0	μ	ϕ	fv,lim	E	G	FC
600000			345000	9000	20000	0.58	0.77	32500	320000000	128000000	1.2

Verifica a pressoflessione nel piano secondo D.M. 17-01-18 NTC §7.8.2.2.1 in combinazioni non sismiche, γM = 3

Comb.	Quota	N	M	σ0	Mu	c.s.	Verifica
SLU 79	8.55	-3284	-81.62	33144	344.59	4.222	Si
SLU 79	10.65	-5039	283.41	50860	334.89	1.182	Si
SLU 80	8.55	-3372	-58.3	34033	347.32	5.958	Si
SLU 80	10.65	-4871	263.56	49167	341.65	1.296	Si
SLU 84	8.55	-3432	-35.84	34636	348.99	9.738	Si
SLU 84	10.65	-4846	250.21	48911	342.57	1.369	Si
SLU 69	8.55	-3147	-104.89	31767	339.69	3.239	Si
SLU 69	10.65	-4680	266.97	47238	347.86	1.303	Si
SLU 77	8.55	-3346	-81.56	33773	346.56	4.249	Si
SLU 77	10.65	-5105	286.2	51522	331.91	1.16	Si
SLU 81	8.55	-3318	-46.7	33491	345.7	7.402	Si
SLU 81	10.65	-4806	248.48	48512	343.94	1.384	Si
SLU 71	8.55	-3085	-104.96	31139	337.18	3.213	Si
SLU 71	10.65	-4615	264.17	46576	349.62	1.323	Si
SLU 78	8.55	-3434	-58.23	34662	349.05	5.994	Si
SLU 78	10.65	-4937	266.35	49829	339.15	1.273	Si
SLU 83	8.55	-3344	-59.16	33748	346.48	5.856	Si
SLU 83	10.65	-5014	270.07	50604	335.99	1.244	Si
SLU 74	8.55	-3321	-69.1	33517	345.78	5.004	Si
SLU 74	10.65	-4897	264.61	49430	340.68	1.287	Si

Verifica a pressoflessione nel piano secondo D.M. 17-01-18 NTC §7.8.2.2.1 in combinazioni sismiche, γM = 2

Comb.	Quota	N	M	σ0	Mu	c.s.	Verifica
SLV 12	8.55	-4466	495.58	45072	498.63	1.006	Si
SLV 12	10.65	367	-280.96	0	0	0	No, Trazione
SLV 9	8.55	158	-660.68	0	0	0	No, Trazione
SLV 9	10.65	-7426	684.35	74952	507.91	0.742	No, M>Mu
SLV 11	8.55	-4466	495.58	45072	498.63	1.006	Si
SLV 11	10.65	367	-280.96	0	0	0	No, Trazione
SLV 5	8.55	-224	-599.1	0	0	0	No, e>l/2
SLV 5	10.65	-6832	615.2	68956	526.59	0.856	No, M>Mu
SLV 14	8.55	-1016	-327.84	0	0	0	No, e>l/2
SLV 14	10.65	-5391	427.17	54416	529.06	1.239	Si
SLV 13	8.55	-1016	-327.84	0	0	0	No, e>l/2
SLV 13	10.65	-5391	427.17	54416	529.06	1.239	Si
SLV 8	8.55	-4847	557.15	48918	514.19	0.923	No, M>Mu
SLV 8	10.65	962	-350.11	0	0	0	No, Trazione
SLV 7	8.55	-4847	557.15	48918	514.19	0.923	No, M>Mu
SLV 7	10.65	962	-350.11	0	0	0	No, Trazione
SLV 6	8.55	-224	-599.1	0	0	0	No, e>l/2
SLV 6	10.65	-6832	615.2	68956	526.59	0.856	No, M>Mu
SLV 10	8.55	158	-660.68	0	0	0	No, Trazione
SLV 10	10.65	-7426	684.35	74952	507.91	0.742	No, M>Mu

Verifica a taglio nel piano secondo D.M. 17-01-18 (N.T.C.) §7.8.2.2.2 con rottura per scorrimento in combinazioni non sismiche, γM = 3

Comb.	Quota	N	V par	M	σ0	σN	l'	fvd	Vt scorr.	Vt fess.diag.	Vt,lim	c.s.	Verifica
SLU 69	8.55	-3147	-382	-104.89		31767	0.3538	9791	970			2.54	Si
SLU 69	10.65	-4680	-1956	266.97		47238	0.3538	10833	1073			0.55	No, Vu<V
SLU 37	8.55	-2688	-319	-70.21		27129	0.3538	9173	909			2.85	Si
SLU 37	10.65	-4340	-1843	251.25		43799	0.3538	10833	1073			0.58	No, Vu<V
SLU 71	8.55	-3085	-383	-104.96		31139	0.3538	9707	962			2.51	Si
SLU 71	10.65	-4615	-1937	264.17		46576	0.3538	10833	1073			0.55	No, Vu<V
SLU 78	8.55	-3434	-267	-58.23		34662	0.3538	10177	1008			3.78	Si
SLU 78	10.65	-4937	-1955	266.35		49829	0.3538	10833	1073			0.55	No, Vu<V

Comb.	Quota	N	V par	M	σ0	σN	l'	fvd	Vt scorr.	Vt fess.diag.	Vt,lim	c.s.	Verifica
SLU 74	8.55	-3321	-309	-69.1		33517	0.3538	10024	993			3.21	Si
SLU 74	10.65	-4897	-1941	264.61		49430	0.3538	10833	1073			0.55	No, Vu<V
SLU 80	8.55	-3372	-268	-58.3		34033	0.3538	10093	1000			3.73	Si
SLU 80	10.65	-4871	-1937	263.56		49167	0.3538	10833	1073			0.55	No, Vu<V
SLU 83	8.55	-3344	-298	-59.16		33748	0.3538	10055	996			3.34	Si
SLU 83	10.65	-5014	-1984	270.07		50604	0.3538	10833	1073			0.54	No, Vu<V
SLU 79	8.55	-3284	-354	-81.62		33144	0.3538	9975	988			2.8	Si
SLU 79	10.65	-5039	-2081	283.41		50860	0.3538	10833	1073			0.52	No, Vu<V
SLU 35	8.55	-2750	-318	-70.14		27758	0.3538	9257	917			2.89	Si
SLU 35	10.65	-4405	-1862	254.04		44462	0.3538	10833	1073			0.58	No, Vu<V
SLU 77	8.55	-3346	-352	-81.56		33773	0.3538	10059	997			2.83	Si
SLU 77	10.65	-5105	-2100	286.2		51522	0.3538	10833	1073			0.51	No, Vu<V

Verifica a taglio nel piano secondo D.M. 17-01-18 (N.T.C.) §7.8.2.2.2 con rottura per scorrimento in combinazioni sismiche, γM = 2

Comb.	Quota	N	V par	M	σ0	σN	l'	fvd	Vt scorr.	Vt fess.diag.	Vt,lim	c.s.	Verifica
SLV 8	8.55	-4847	1868	557.15		93111	0.1859	16250	846			0.45	No, Vu<V
SLV 8	10.65	962	2689	-350.11		0	0	8333	0			0	No, Vu<V
SLV 5	8.55	-224	-2006	-599.1		0	0	8333	0			0	No, Vu<V
SLV 5	10.65	-6832	-4629	615.2		93619	0.2606	16250	1186			0.26	No, Vu<V
SLV 13	8.55	-1016	-1239	-327.84		0	0	8333	0			0	No, Vu<V
SLV 13	10.65	-5391	-3181	427.17		65699	0.2931	16250	1333			0.42	No, Vu<V
SLV 7	8.55	-4847	1868	557.15		93111	0.1859	16250	846			0.45	No, Vu<V
SLV 7	10.65	962	2689	-350.11		0	0	8333	0			0	No, Vu<V
SLV 6	8.55	-224	-2006	-599.1		0	0	8333	0			0	No, Vu<V
SLV 6	10.65	-6832	-4629	615.2		93619	0.2606	16250	1186			0.26	No, Vu<V
SLV 14	8.55	-1016	-1239	-327.84		0	0	8333	0			0	No, Vu<V
SLV 14	10.65	-5391	-3181	427.17		65699	0.2931	16250	1333			0.42	No, Vu<V
SLV 11	8.55	-4466	1596	495.58		80613	0.1978	16250	900			0.56	No, Vu<V
SLV 11	10.65	367	2175	-280.96		0	0	8333	0			0	No, Vu<V
SLV 10	8.55	158	-2278	-660.68		0	0	8333	0			0	No, Vu<V
SLV 10	10.65	-7426	-5143	684.35		104291	0.2543	16250	1157			0.22	No, Vu<V
SLV 9	8.55	158	-2278	-660.68		0	0	8333	0			0	No, Vu<V
SLV 9	10.65	-7426	-5143	684.35		104291	0.2543	16250	1157			0.22	No, Vu<V
SLV 12	8.55	-4466	1596	495.58		80613	0.1978	16250	900			0.56	No, Vu<V
SLV 12	10.65	367	2175	-280.96		0	0	8333	0			0	No, Vu<V

Verifica a pressoflessione fuori piano D.M. 17-01-18 (N.T.C.)

quota 10.3 Wa 0.05 denominatore 8 γM = 2

Comb.	fd	Sa	σ0	N	M	Mc	Coeff.s.	Verifica
SLV 8	143750	0.46	0	-102	41.76	0	0	No, e>t/2
SLV 7	143750	0.46	0	-102	41.76	0	0	No, e>t/2
SLV 12	143750	0.46	5333	-528	41.76	70.74	1.69	Si
SLV 11	143750	0.46	5333	-528	41.76	70.74	1.69	Si
SLV 4	143750	0.46	14815	-1468	41.76	180.58	4.32	Si
SLV 3	143750	0.46	14815	-1468	41.76	180.58	4.32	Si
SLV 16	143750	0.46	29146	-2888	41.76	307.85	7.37	Si
SLV 15	143750	0.46	29146	-2888	41.76	307.85	7.37	Si
SLV 1	143750	0.46	30928	-3064	41.76	320.41	7.67	Si
SLV 2	143750	0.46	30928	-3064	41.76	320.41	7.67	Si

Verifica dei meccanismi locali di collasso con analisi cinematica lineare

forza di aggancio al piano = 0 quota mezzeria = 10.3 Wa = 0.05 Ta = 0.0731

Comb.	N top	N base	V orto	α0	M*	e*	a0*	aLim	Verifica
SLV 6	-13	-224	67	0	63.7	0.981	0	9.02602	No
SLV 9	83	158	-21	0	0	0	0	9.02602	No, Trazione
SLV 3	-1320	-3673	82	0	183.9	0.928	0	10.21601	No
SLV 2	-768	-2286	123	0	128.7	0.907	0	10.21601	No
SLV 4	-1320	-3673	82	0	183.9	0.928	0	10.21601	No
SLV 11	-1755	-4466	-156	0	228	0.94	0	9.02602	No
SLV 10	83	158	-21	0	0	0	0	9.02602	No, Trazione
SLV 1	-768	-2286	123	0	128.7	0.907	0	10.21601	No
SLV 5	-13	-224	67	0	63.7	0.981	0	9.02602	No
SLV 12	-1755	-4466	-156	0	228	0.94	0	9.02602	No

Tabella dei coefficienti di sicurezza minimi

Stato limite	Coeff.s.	Comb.	Verifica
PF_SLU	1.16	SLU 77	Si
V_SLU	0.511	SLU 77	No
PF_SLV	0	SLV 12	No
V_SLV	0	SLV 5	No
PFFP_SLV	0	SLV 7	No
R_SLV	0	SLV 10	No

Maschio 196

Verifiche condotte secondo D.M. 17-01-18 (N.T.C.)

Dati geometrici

X ini.	Y ini.	X fin.	Y fin.	Quota i.	Quota.s	l	Sp.	h netta	h ini.	h fin.	a	a.s.,sx	a.s.,dx
-9.72	1.141	-9.72	1.426	L5	L6	0.285	0.14	3.5	3.5	3.5			

Caratteristiche del materiale

(Circolare 7 21-01-19 C8.5.I) Muratura in mattoni pieni e malta di calce LC2_Corti

fb	fk	fvk0	fmedio	τ0	fv0	μ	ϕ	fv,lim	E	G	FC
600000			345000	9000	20000	0.58	0.77	32500	320000000	128000000	1.2

Verifica a pressoflessione nel piano secondo D.M. 17-01-18 NTC §7.8.2.2.1 in combinazioni non sismiche, γM = 3

Comb.	Quota	N	M	σ0	Mu	c.s.	Verifica
SLU 58	8.55	-2788	140.34	69975	55.94	0.399	No, M>Mu
SLU 58	10.65	-158	-109.14	0	0	0	No, e>l/2
SLU 60	8.55	-2638	134.29	66202	70.31	0.524	No, M>Mu
SLU 60	10.65	-121	-102.84	0	0	0	No, e>l/2
SLU 55	8.55	-2645	132.74	66368	69.72	0.525	No, M>Mu
SLU 55	10.65	-144	-103.09	0	0	0	No, e>l/2
SLU 54	8.55	-2681	133.51	67284	66.39	0.497	No, M>Mu
SLU 54	10.65	-175	-102.98	0	0	0	No, e>l/2
SLU 57	8.55	-2816	140.37	70669	53.08	0.378	No, M>Mu
SLU 57	10.65	-186	-108.99	0	0	0	No, e>l/2
SLU 59	8.55	-2783	139.9	69842	56.48	0.404	No, M>Mu
SLU 59	10.65	-157	-109.12	0	0	0	No, e>l/2
SLU 61	8.55	-2633	133.85	66069	70.78	0.529	No, M>Mu
SLU 61	10.65	-120	-102.81	0	0	0	No, e>l/2
SLU 1	8.55	-1800	88.02	45170	114.11	1.296	Si
SLU 1	10.65	-129	-67.67	0	0	0	No, e>l/2
SLU 56	8.55	-2821	140.81	70803	52.52	0.373	No, M>Mu
SLU 56	10.65	-188	-109.02	0	0	0	No, e>l/2
SLU 53	8.55	-2686	133.95	67418	65.9	0.492	No, M>Mu
SLU 53	10.65	-176	-103.01	0	0	0	No, e>l/2

Verifica a pressoflessione nel piano secondo D.M. 17-01-18 NTC §7.8.2.2.1 in combinazioni sismiche, γM = 2

Comb.	Quota	N	M	σ0	Mu	c.s.	Verifica
SLV 4	8.55	-3300	265	82804	151.35	0.571	No, M>Mu
SLV 4	10.65	1222	-187.05	0	0	0	No, Trazione
SLV 2	8.55	-1812	85	45485	161.92	1.905	Si
SLV 2	10.65	220	-108.7	0	0	0	No, Trazione
SLV 7	8.55	-4619	421.02	115922	33.71	0.08	No, M>Mu
SLV 7	10.65	1802	-227.43	0	0	0	No, Trazione
SLV 3	8.55	-3300	265	82804	151.35	0.571	No, M>Mu
SLV 3	10.65	1222	-187.05	0	0	0	No, Trazione
SLV 5	8.55	338	-178.98	0	0	0	No, Trazione
SLV 5	10.65	-1539	33.74	38628	149.8	4.44	Si
SLV 9	8.55	694	-225.25	0	0	0	No, Trazione
SLV 9	10.65	-2044	77.48	51305	168.78	2.178	Si
SLV 6	8.55	338	-178.98	0	0	0	No, Trazione
SLV 6	10.65	-1539	33.74	38628	149.8	4.44	Si
SLV 1	8.55	-1812	85	45485	161.92	1.905	Si
SLV 1	10.65	220	-108.7	0	0	0	No, Trazione
SLV 10	8.55	694	-225.25	0	0	0	No, Trazione
SLV 10	10.65	-2044	77.48	51305	168.78	2.178	Si
SLV 8	8.55	-4619	421.02	115922	33.71	0.08	No, M>Mu
SLV 8	10.65	1802	-227.43	0	0	0	No, Trazione

Verifica a taglio nel piano secondo D.M. 17-01-18 (N.T.C.) §7.8.2.2.2 con rottura per scorrimento in combinazioni non sismiche, γM = 3

Comb.	Quota	N	V par	M	σ0	σN	l'	fvd	Vt scorr.	Vt fess.diag.	Vt,lim	c.s.	Verifica
SLU 53	8.55	-2686	293	133.95		69185	0.2774	10833	421			1.44	Si
SLU 53	10.65	-176	258	-103.01		0	0	5556	0			0	No, Vu<V
SLU 58	8.55	-2788	307	140.34		72176	0.2759	10833	419			1.36	Si
SLU 58	10.65	-158	272	-109.14		0	0	5556	0			0	No, Vu<V
SLU 61	8.55	-2633	292	133.85		68526	0.2744	10833	416			1.43	Si
SLU 61	10.65	-120	258	-102.81		0	0	5556	0			0	No, Vu<V
SLU 55	8.55	-2645	290	132.74		68353	0.2764	10833	419			1.45	Si
SLU 55	10.65	-144	258	-103.09		0	0	5556	0			0	No, Vu<V
SLU 60	8.55	-2638	293	134.29		68714	0.2742	10833	416			1.42	Si
SLU 60	10.65	-121	258	-102.84		0	0	5556	0			0	No, Vu<V
SLU 59	8.55	-2783	306	139.9		71990	0.2761	10833	419			1.37	Si
SLU 59	10.65	-157	272	-109.12		0	0	5556	0			0	No, Vu<V
SLU 1	8.55	-1800	191	88.02		45878	0.2802	10833	425			2.22	Si
SLU 1	10.65	-129	170	-67.67		0	0	5556	0			0	No, Vu<V
SLU 57	8.55	-2816	307	140.37		72510	0.2774	10833	421			1.37	Si
SLU 57	10.65	-186	272	-108.99		0	0	5556	0			0	No, Vu<V
SLU 56	8.55	-2821	308	140.81		72696	0.2772	10833	420			1.36	Si
SLU 56	10.65	-188	272	-109.02		0	0	5556	0			0	No, Vu<V
SLU 54	8.55	-2681	291	133.51		68999	0.2776	10833	421			1.45	Si
SLU 54	10.65	-175	258	-102.98		0	0	5556	0			0	No, Vu<V

Verifica a taglio nel piano secondo D.M. 17-01-18 (N.T.C.) §7.8.2.2.2 con rottura per scorrimento in combinazioni sismiche, γM = 2

Comb.	Quota	N	V par	M	σ0	σN	l'	fvd	Vt scorr.	Vt fess.diag.	Vt,lim	c.s.	Verifica
SLV 4	8.55	-3300	701	265		126711	0.186	16250	423			0.6	No, Vu<V
SLV 4	10.65	1222	452	-187.05		0	0	8333	0			0	No, Vu<V
SLV 3	8.55	-3300	701	265		126711	0.186	16250	423			0.6	No, Vu<V
SLV 3	10.65	1222	452	-187.05		0	0	8333	0			0	No, Vu<V
SLV 7	8.55	-4619	1189	421.02		214934	0.1535	16250	349			0.29	No, Vu<V
SLV 7	10.65	1802	601	-227.43		0	0	8333	0			0	No, Vu<V
SLV 8	8.55	-4619	1189	421.02		214934	0.1535	16250	349			0.29	No, Vu<V
SLV 8	10.65	1802	601	-227.43		0	0	8333	0			0	No, Vu<V
SLV 5	8.55	338	-634	-178.98		0	0	8333	0			0	No, Vu<V
SLV 5	10.65	-1539	-132	33.74		38628	0.2846	16059	640			4.85	Si
SLV 9	8.55	694	-762	-225.25		0	0	8333	0			0	No, Vu<V
SLV 9	10.65	-2044	-224	77.48		51305	0.2846	16250	648			2.88	Si
SLV 1	8.55	-1812	155	85		45485	0.2846	16250	648			4.19	Si
SLV 1	10.65	220	232	-108.7		0	0	8333	0			0	No, Vu<V
SLV 6	8.55	338	-634	-178.98		0	0	8333	0			0	No, Vu<V
SLV 6	10.65	-1539	-132	33.74		38628	0.2846	16059	640			4.85	Si
SLV 2	8.55	-1812	155	85		45485	0.2846	16250	648			4.19	Si
SLV 2	10.65	220	232	-108.7		0	0	8333	0			0	No, Vu<V
SLV 10	8.55	694	-762	-225.25		0	0	8333	0			0	No, Vu<V

Comb.	Quota	N	V par	M	σ0	σN	l'	fvd	Vt scorr.	Vt fess.diag.	Vt,lim	c.s.	Verifica
SLV 10	10.65	-2044	-224	77.48		51305	0.2846	16250	648			2.88	Si

Verifica a pressoflessione fuori piano D.M. 17-01-18 (N.T.C.)

quota 10.3 Wa 0.03 denominatore 8 γM = 2

Comb.	fd	Sa	σ0	N	M	Mc	Coeff.s.	Verifica
SLV 7	143750	0.46	0	1771	18.4	0	0	No, Trazione
SLV 12	143750	0.46	0	1266	18.4	0	0	No, Trazione
SLV 4	143750	0.46	0	1191	18.4	0	0	No, Trazione
SLV 1	143750	0.46	0	189	18.4	0	0	No, Trazione
SLV 3	143750	0.46	0	1191	18.4	0	0	No, Trazione
SLV 11	143750	0.46	0	1266	18.4	0	0	No, Trazione
SLV 8	143750	0.46	0	1771	18.4	0	0	No, Trazione
SLV 2	143750	0.46	0	189	18.4	0	0	No, Trazione
SLV 16	143750	0.46	12337	-492	18.4	30.94	1.68	Si
SLV 15	143750	0.46	12337	-492	18.4	30.94	1.68	Si

Verifica dei meccanismi locali di collasso con analisi cinematica lineare

forza di aggancio al piano = 0 quota mezzeria = 10.3 Wa = 0.03 Ta = 0.1461

Comb.	N top	N base	V orto	α0	M*	e*	a0*	aLim	Verifica
SLV 10	204	694	-1	0	0	0	0	18.80115	No, Trazione
SLV 9	204	694	-1	0	0	0	0	18.80115	No, Trazione
SLV 5	110	338	0	0	0	0	0	18.80115	No, Trazione
SLV 6	110	338	0	0	0	0	0	18.80115	No, Trazione
SLV 3	-1349	-3300	3	0.02	157	0.963	0.2971	18.99716	No
SLV 4	-1349	-3300	3	0.02	157	0.963	0.2971	18.99716	No
SLV 15	-1036	-2113	-2	0.02	125.2	0.954	0.30499	18.99716	No
SLV 16	-1036	-2113	-2	0.02	125.2	0.954	0.30499	18.99716	No
SLV 14	-413	-626	-3	0.019	62.2	0.918	0.30549	18.99716	No
SLV 13	-413	-626	-3	0.019	62.2	0.918	0.30549	18.99716	No

Tabella dei coefficienti di sicurezza minimi

Stato limite	Coeff.s.	Comb.	Verifica
PF_SLU	0	SLU 1	No
V_SLU	0	SLU 1	No
PF_SLV	0	SLV 12	No
V_SLV	0	SLV 1	No
PFFP_SLV	0	SLV 12	No
R_SLV	0	SLV 10	No

Maschio 197

Verifiche condotte secondo D.M. 17-01-18 (N.T.C.)

Dati geometrici

X ini.	Y ini.	X fin.	Y fin.	Quota i.	Quota.s	l	Sp.	h netta	h ini.	h fin.	a	a.s.,sx	a.s.,dx
-9.72	2.226	-9.72	6.64	L5	L6	4.414	0.14	3.5	3.5	3.5			

Caratteristiche del materiale

(Circolare 7 21-01-19 C8.5.I) Muratura in mattoni pieni e malta di calce LC2_Corti

fb	fk	fvk0	fmedio	τ0	fv0	μ	ϕ	fv,lim	E	G	FC
600000			345000	9000	20000	0.58	0.77	32500	320000000	128000000	1.2

Verifica a pressoflessione nel piano secondo D.M. 17-01-18 NTC §7.8.2.2.1 in combinazioni non sismiche, γM = 3

Comb.	Quota	N	M	σ0	Mu	c.s.	Verifica
SLU 82	8.55	-21790	-1621.51	35259	27275.72	16.821	Si
SLU 82	10.65	-16994	-6261.41	27499	24845.89	3.968	Si
SLU 83	8.55	-22340	-1547.95	36149	27425.49	17.717	Si
SLU 83	10.65	-17548	-6410.62	28395	25229.17	3.936	Si
SLU 75	8.55	-21843	-1525.89	35345	27291.26	17.886	Si
SLU 75	10.65	-17232	-6181.73	27883	25013.55	4.046	Si
SLU 79	8.55	-22005	-1365.99	35608	27337.47	20.013	Si
SLU 79	10.65	-17434	-6243.27	28211	25152.66	4.029	Si
SLU 74	8.55	-21850	-1536.83	35357	27293.41	17.76	Si
SLU 74	10.65	-17241	-6199.42	27898	25019.84	4.036	Si
SLU 78	8.55	-22385	-1441.39	36223	27436.68	19.035	Si
SLU 78	10.65	-17776	-6313.25	28764	25379.46	4.02	Si
SLU 81	8.55	-21797	-1632.45	35271	27277.9	16.71	Si
SLU 81	10.65	-17003	-6279.1	27514	24852.37	3.958	Si
SLU 77	8.55	-22393	-1452.33	36235	27438.48	18.893	Si
SLU 77	10.65	-17785	-6330.94	28779	25385.32	4.01	Si
SLU 84	8.55	-22333	-1537.01	36138	27423.66	17.842	Si
SLU 84	10.65	-17539	-6392.93	28380	25223.13	3.945	Si
SLU 80	8.55	-21998	-1355.05	35596	27335.42	20.173	Si
SLU 80	10.65	-17425	-6225.58	28196	25146.53	4.039	Si

Verifica a pressoflessione nel piano secondo D.M. 17-01-18 NTC §7.8.2.2.1 in combinazioni sismiche, γM = 2

Comb.	Quota	N	M	σ0	Mu	c.s.	Verifica
SLV 10	8.55	-14388	-6631.4	23281	25704.52	3.876	Si
SLV 10	10.65	-7908	3169.13	12797	15626.63	4.931	Si
SLV 6	8.55	-13462	-5812.6	21783	24414.56	4.2	Si
SLV 6	10.65	-7899	2135.95	12782	15610.66	7.309	Si
SLV 5	8.55	-13462	-5812.6	21783	24414.56	4.2	Si
SLV 5	10.65	-7899	2135.95	12782	15610.66	7.309	Si
SLV 7	8.55	-14878	4584.57	24075	26367.74	5.751	Si
SLV 7	10.65	-15029	-11404.33	24318	26568	2.33	Si

Comb.	Quota	N	M	σ0	Mu	c.s.	Verifica
SLV 4	8.55	-13302	1900.82	21525	24187.32	12.725	Si
SLV 4	10.65	-12523	-7870.61	20263	23055.16	2.929	Si
SLV 3	8.55	-13302	1900.82	21525	24187.32	12.725	Si
SLV 3	10.65	-12523	-7870.61	20263	23055.16	2.929	Si
SLV 9	8.55	-14388	-6631.4	23281	25704.52	3.876	Si
SLV 9	10.65	-7908	3169.13	12797	15626.63	4.931	Si
SLV 12	8.55	-15804	3765.77	25574	27581.02	7.324	Si
SLV 12	10.65	-15038	-10371.14	24333	26580.15	2.563	Si
SLV 8	8.55	-14878	4584.57	24075	26367.74	5.751	Si
SLV 8	10.65	-15029	-11404.33	24318	26568	2.33	Si
SLV 11	8.55	-15804	3765.77	25574	27581.02	7.324	Si
SLV 11	10.65	-15038	-10371.14	24333	26580.15	2.563	Si

Verifica a taglio nel piano secondo D.M. 17-01-18 (N.T.C.) §7.8.2.2.2 con rottura per scorrimento in combinazioni non sismiche, γM = 3

Comb.	Quota	N	V par	M	σ0	σN	l'	fvd	Vt scorr.	Vt fess.diag.	Vt,lim	c.s.	Verifica
SLU 50	8.55	-17823	-139	-922.97		28840	4.4142	9401	5810			41.75	Si
SLU 50	10.65	-14249	-138	-4884.39		23057	4.4142	8630	5333			38.53	Si
SLU 49	8.55	-18203	-134	-998.37		29456	4.4142	9483	5860			43.85	Si
SLU 49	10.65	-14591	-133	-4954.37		23610	4.4142	8704	5379			40.47	Si
SLU 71	8.55	-19958	-140	-1138.58		32294	4.4142	9861	6094			43.55	Si
SLU 71	10.65	-15899	-139	-5545.89		25727	4.4142	8986	5553			39.9	Si
SLU 72	8.55	-19950	-140	-1127.64		32282	4.4142	9860	6093			43.44	Si
SLU 72	10.65	-15890	-140	-5528.2		25712	4.4142	8984	5552			39.79	Si
SLU 79	8.55	-22005	-140	-1365.99		35608	4.4142	10303	6367			45.61	Si
SLU 79	10.65	-17434	-139	-6243.27		28211	4.4142	9317	5758			41.45	Si
SLU 58	8.55	-19871	-139	-1150.39		32154	4.4142	9843	6083			43.81	Si
SLU 58	10.65	-15784	-138	-5581.76		25541	4.4142	8961	5538			40.09	Si
SLU 59	8.55	-19863	-139	-1139.45		32142	4.4142	9841	6082			43.7	Si
SLU 59	10.65	-15775	-139	-5564.07		25526	4.4142	8959	5537			39.97	Si
SLU 80	8.55	-21998	-140	-1355.05		35596	4.4142	10302	6366			45.49	Si
SLU 80	10.65	-17425	-139	-6225.58		28196	4.4142	9315	5757			41.33	Si
SLU 48	8.55	-18211	-133	-1009.31		29468	4.4142	9485	5861			43.97	Si
SLU 48	10.65	-14600	-133	-4972.06		23625	4.4142	8706	5380			40.58	Si
SLU 51	8.55	-17816	-140	-912.03		28828	4.4142	9399	5809			41.64	Si
SLU 51	10.65	-14240	-139	-4866.7		23042	4.4142	8628	5332			38.42	Si

Verifica a taglio nel piano secondo D.M. 17-01-18 (N.T.C.) §7.8.2.2.2 con rottura per scorrimento in combinazioni sismiche, γM = 2

Comb.	Quota	N	V par	M	σ0	σN	l'	fvd	Vt scorr.	Vt fess.diag.	Vt,lim	c.s.	Verifica
SLV 2	8.55	-12877	-3600	-1218.33		20837	4.4142	12501	7725			2.15	Si
SLV 2	10.65	-10384	-3161	-3808.53		16803	4.4142	11694	7227			2.29	Si
SLV 5	8.55	-13462	-9348	-5812.6		21783	4.4142	12690	7842			0.84	No, Vu<V
SLV 5	10.65	-7899	-8172	2135.95		12782	4.4142	10890	6730			0.82	No, Vu<V
SLV 9	8.55	-14388	-8859	-6631.4		23281	4.4142	12990	8027			0.91	No, Vu<V
SLV 9	10.65	-7908	-7740	3169.13		12797	4.4142	10893	6732			0.87	No, Vu<V
SLV 7	8.55	-14878	8703	4584.57		24075	4.4142	13148	8126			0.93	No, Vu<V
SLV 7	10.65	-15029	7585	-11404.33		24707	4.3448	13275	8075			1.06	Si
SLV 12	8.55	-15804	9192	3765.77		25574	4.4142	13448	8311			0.9	No, Vu<V
SLV 12	10.65	-15038	8017	-10371.14		24333	4.4142	13200	8157			1.02	Si
SLV 1	8.55	-12877	-3600	-1218.33		20837	4.4142	12501	7725			2.15	Si
SLV 1	10.65	-10384	-3161	-3808.53		16803	4.4142	11694	7227			2.29	Si
SLV 10	8.55	-14388	-8859	-6631.4		23281	4.4142	12990	8027			0.91	No, Vu<V
SLV 10	10.65	-7908	-7740	3169.13		12797	4.4142	10893	6732			0.87	No, Vu<V
SLV 11	8.55	-15804	9192	3765.77		25574	4.4142	13448	8311			0.9	No, Vu<V
SLV 11	10.65	-15038	8017	-10371.14		24333	4.4142	13200	8157			1.02	Si
SLV 8	8.55	-14878	8703	4584.57		24075	4.4142	13148	8126			0.93	No, Vu<V
SLV 8	10.65	-15029	7585	-11404.33		24707	4.3448	13275	8075			1.06	Si
SLV 6	8.55	-13462	-9348	-5812.6		21783	4.4142	12690	7842			0.84	No, Vu<V
SLV 6	10.65	-7899	-8172	2135.95		12782	4.4142	10890	6730			0.82	No, Vu<V

Verifica a pressoflessione fuori piano D.M. 17-01-18 (N.T.C.)

quota 10.3 Wa 0.03 denominatore 8 γM = 2

Comb.	fd	Sa	σ0	N	M	Mc	Coeff.s.	Verifica
SLV 9	143750	0.46	14048	-8682	285.3	537.85	1.89	Si
SLV 10	143750	0.46	14048	-8682	285.3	537.85	1.89	Si
SLV 5	143750	0.46	14093	-8709	285.3	539.34	1.89	Si
SLV 6	143750	0.46	14093	-8709	285.3	539.34	1.89	Si
SLV 13	143750	0.46	17526	-10831	285.3	649.42	2.28	Si
SLV 14	143750	0.46	17526	-10831	285.3	649.42	2.28	Si
SLV 1	143750	0.46	17675	-10923	285.3	654.01	2.29	Si
SLV 2	143750	0.46	17675	-10923	285.3	654.01	2.29	Si
SLV 16	143750	0.46	20552	-12701	285.3	739.52	2.59	Si
SLV 15	143750	0.46	20552	-12701	285.3	739.52	2.59	Si

Verifica dei meccanismi locali di collasso con analisi cinematica lineare

forza di aggancio al piano = 0 quota mezzeria = 10.3 Wa = 0.03 Ta = 0.1461

Comb.	N top	N base	V orto	α0	M*	e*	a0*	aLim	Verifica
SLV 7	-7147	-14878	-24	0.022	1038.1	0.922	0.34168	18.80115	No
SLV 8	-7147	-14878	-24	0.022	1038.1	0.922	0.34168	18.80115	No
SLV 12	-7252	-15804	-22	0.022	1048.6	0.923	0.34326	18.80115	No
SLV 11	-7252	-15804	-22	0.022	1048.6	0.923	0.34326	18.80115	No
SLV 9	-6302	-14388	23	0.022	953.4	0.917	0.34698	18.80115	No
SLV 10	-6302	-14388	23	0.022	953.4	0.917	0.34698	18.80115	No
SLV 6	-6198	-13462	22	0.022	942.9	0.917	0.35001	18.80115	No
SLV 5	-6198	-13462	22	0.022	942.9	0.917	0.35001	18.80115	No
SLV 4	-6693	-13302	-9	0.023	992.5	0.92	0.37067	18.99716	No
SLV 3	-6693	-13302	-9	0.023	992.5	0.92	0.37067	18.99716	No

Tabella dei coefficienti di sicurezza minimi

Stato limite	Coeff.s.	Comb.	Verifica

Stato limite	Coeff.s.	Comb.	Verifica
PF_SLU	3.936	SLU 83	Si
V_SLU	38.425	SLU 51	Si
PF_SLV	2.33	SLV 7	Si
V_SLV	0.824	SLV 5	No
PFFP_SLV	1.885	SLV 9	Si
R_SLV	0.018	SLV 7	No

Maschio 198

Verifiche condotte secondo D.M. 17-01-18 (N.T.C.)

Dati geometrici

X ini.	Y ini.	X fin.	Y fin.	Quota i.	Quota.s	l	Sp.	h netta	h ini.	h fin.	a	a.s.,sx	a.s.,dx
-11.003	-4.697	-9.867	-4.697	L5	L6	1.136	0.3	3.5	3.5	3.5			

Caratteristiche del materiale

(Circolare 7 21-01-19 C8.5.I) Muratura in mattoni pieni e malta di calce LC2_Corti

fb	fk	fvk0	fmedio	τ0	fv0	μ	ϕ	fv,lim	E	G	FC
600000			345000	9000	20000	0.58	0.77	32500	320000000	128000000	1.2

Verifica a pressoflessione nel piano secondo D.M. 17-01-18 NTC §7.8.2.2.1 in combinazioni non sismiche, γM = 3

Comb.	Quota	N	M	σ0	Mu	c.s.	Verifica
SLU 82	8.55	-7036	-472.04	20647	2983.43	6.32	Si
SLU 82	11.66	-5365	218.4	15742	2458.17	11.255	Si
SLU 31	8.55	-5511	-409	16171	2508.66	6.134	Si
SLU 31	11.66	-4360	194.25	12795	2087.59	10.747	Si
SLU 42	8.55	-5844	-433.51	17149	2620.53	6.045	Si
SLU 42	11.66	-4790	212.12	14056	2251.11	10.613	Si
SLU 84	8.55	-7227	-479.58	21208	3036.16	6.331	Si
SLU 84	11.66	-5704	235.17	16737	2573.91	10.945	Si
SLU 33	8.55	-5741	-401.53	16846	2586.31	6.441	Si
SLU 33	11.66	-4641	195.13	13617	2195.11	11.249	Si
SLU 40	8.55	-5653	-425.97	16589	2557	6.003	Si
SLU 40	11.66	-4451	195.35	13061	2122.69	10.866	Si
SLU 38	8.55	-5907	-410.36	17333	2641.03	6.436	Si
SLU 38	11.66	-4988	216.33	14638	2324.14	10.743	Si
SLU 39	8.55	-5674	-405.38	16651	2564.08	6.325	Si
SLU 39	11.66	-4376	178.16	12842	2093.73	11.752	Si
SLU 34	8.55	-5702	-416.54	16732	2573.3	6.178	Si
SLU 34	11.66	-4699	211.02	13790	2217.26	10.507	Si
SLU 41	8.55	-5865	-412.92	17211	2627.44	6.363	Si
SLU 41	11.66	-4715	194.93	13836	2223.18	11.405	Si

Verifica a pressoflessione nel piano secondo D.M. 17-01-18 NTC §7.8.2.2.1 in combinazioni sismiche, γM = 2

Comb.	Quota	N	M	σ0	Mu	c.s.	Verifica
SLV 4	8.55	-4935	-809.87	14481	2470.76	3.051	Si
SLV 4	11.66	-5498	729.22	16132	2710.19	3.717	Si
SLV 3	8.55	-4935	-809.87	14481	2470.76	3.051	Si
SLV 3	11.66	-5498	729.22	16132	2710.19	3.717	Si
SLV 15	8.55	-3414	59.6	10017	1779.95	29.864	Si
SLV 15	11.66	-1629	-369.72	4779	888.87	2.404	Si
SLV 8	8.55	-2196	-742.23	6445	1181.63	1.592	Si
SLV 8	11.66	-3790	472.65	11123	1956.9	4.14	Si
SLV 12	8.55	-1740	-481.38	5106	946.92	1.967	Si
SLV 12	11.66	-2630	142.97	7717	1399.32	9.788	Si
SLV 16	8.55	-3414	59.6	10017	1779.95	29.864	Si
SLV 16	11.66	-1629	-369.72	4779	888.87	2.404	Si
SLV 11	8.55	-1740	-481.38	5106	946.92	1.967	Si
SLV 11	11.66	-2630	142.97	7717	1399.32	9.788	Si
SLV 14	8.55	-5305	262.46	15567	2629.15	10.017	Si
SLV 14	11.66	-1931	-479.49	5667	1046.01	2.181	Si
SLV 7	8.55	-2196	-742.23	6445	1181.63	1.592	Si
SLV 7	11.66	-3790	472.65	11123	1956.9	4.14	Si
SLV 13	8.55	-5305	262.46	15567	2629.15	10.017	Si
SLV 13	11.66	-1931	-479.49	5667	1046.01	2.181	Si

Verifica a taglio nel piano secondo D.M. 17-01-18 (N.T.C.) §7.8.2.2.2 con rottura per scorrimento in combinazioni non sismiche, γM = 3

Comb.	Quota	N	V par	M	σ0	σN	l'	fvd	Vt scorr.	Vt fess.diag.	Vt,lim	c.s.	Verifica
SLU 76	8.55	-7085	-554	-462.62		20790	1.1359	8328	2838			5.13	Si
SLU 76	11.66	-5613	-95	234.07		16471	1.1359	7752	2642			27.81	Si
SLU 82	8.55	-7036	-556	-472.04		20647	1.1359	8309	2831			5.09	Si
SLU 82	11.66	-5365	-40	218.4		15742	1.1359	7655	2609			65.82	Si
SLU 34	8.55	-5702	-503	-416.54		16732	1.1359	7786	2653			5.28	Si
SLU 34	11.66	-4699	-97	211.02		13790	1.1359	7394	2520			26.09	Si
SLU 73	8.55	-6894	-543	-455.08		20230	1.1359	8253	2812			5.18	Si
SLU 73	11.66	-5274	-48	217.3		15477	1.1359	7619	2596			53.94	Si
SLU 84	8.55	-7227	-567	-479.58		21208	1.1359	8383	2857			5.04	Si
SLU 84	11.66	-5704	-86	235.17		16737	1.1359	7787	2654			30.68	Si
SLU 80	8.55	-7290	-544	-456.43		21391	1.1359	8408	2865			5.27	Si
SLU 80	11.66	-5902	-134	239.39		17319	1.1359	7865	2680			20.04	Si
SLU 42	8.55	-5844	-516	-433.51		17149	1.1359	7842	2672			5.18	Si
SLU 42	11.66	-4790	-88	212.12		14056	1.1359	7430	2532			28.74	Si
SLU 40	8.55	-5653	-505	-425.97		16589	1.1359	7767	2647			5.24	Si
SLU 40	11.66	-4451	-41	195.35		13061	1.1359	7297	2487			60.33	Si
SLU 78	8.55	-7315	-541	-455.14		21464	1.1359	8417	2869			5.3	Si
SLU 78	11.66	-5893	-120	234.96		17293	1.1359	7861	2679			22.39	Si
SLU 83	8.55	-7248	-537	-458.99		21269	1.1359	8391	2860			5.33	Si

Comb.	Quota	N	V par	M	σ0	σN	I'	fvd	Vt scorr.	Vt fess.diag.	Vt,lim	c.s.	Verifica
SLU 83	11.66	-5629	-74	217.99		16517	1.1359	7758	2644			35.56	Si

Verifica a taglio nel piano secondo D.M. 17-01-18 (N.T.C.) §7.8.2.2.2 con rottura per scorrimento in combinazioni sismiche, γM = 2

Comb.	Quota	N	V par	M	σ0	σN	I'	fvd	Vt scorr.	Vt fess.diag.	Vt,lim	c.s.	Verifica
SLV 4	8.55	-4935	-2897	-809.87		14481	1.1359	11230	3827			1.32	Si
SLV 4	11.66	-5498	-330	729.22		16132	1.1359	11560	3939			11.94	Si
SLV 7	8.55	-2196	-1845	-742.23		10609	0.6901	10455	2164			1.17	Si
SLV 7	11.66	-3790	-435	472.65		11123	1.1359	10558	3598			8.27	Si
SLV 1	8.55	-6826	-2402	-607.02		20031	1.1359	12339	4205			1.75	Si
SLV 1	11.66	-5800	-117	619.45		17020	1.1359	11737	4000			34.26	Si
SLV 16	8.55	-3414	1757	59.6		10017	1.1359	10337	3523			2.01	Si
SLV 16	11.66	-1629	80	-369.72		5307	1.0229	9395	2883			35.92	Si
SLV 15	8.55	-3414	1757	59.6		10017	1.1359	10337	3523			2.01	Si
SLV 15	11.66	-1629	80	-369.72		5307	1.0229	9395	2883			35.92	Si
SLV 13	8.55	-5305	2251	262.46		15567	1.1359	11447	3901			1.73	Si
SLV 13	11.66	-1931	293	-479.49		6712	0.9591	9676	2784			9.49	Si
SLV 14	8.55	-5305	2251	262.46		15567	1.1359	11447	3901			1.73	Si
SLV 14	11.66	-1931	293	-479.49		6712	0.9591	9676	2784			9.49	Si
SLV 3	8.55	-4935	-2897	-809.87		14481	1.1359	11230	3827			1.32	Si
SLV 3	11.66	-5498	-330	729.22		16132	1.1359	11560	3939			11.94	Si
SLV 8	8.55	-2196	-1845	-742.23		10609	0.6901	10455	2164			1.17	Si
SLV 8	11.66	-3790	-435	472.65		11123	1.1359	10558	3598			8.27	Si
SLV 2	8.55	-6826	-2402	-607.02		20031	1.1359	12339	4205			1.75	Si
SLV 2	11.66	-5800	-117	619.45		17020	1.1359	11737	4000			34.26	Si

Verifica a pressoflessione fuori piano D.M. 17-01-18 (N.T.C.)

quota 10.3 Wa 0.05 denominatore 8 γM = 2

Comb.	fd	Sa	σ0	N	M	Mc	Coeff.s.	Verifica
SLV 16	143750	0.46	5686	-1938	146.84	277.13	1.89	Si
SLV 15	143750	0.46	5686	-1938	146.84	277.13	1.89	Si
SLV 11	143750	0.46	7782	-2652	146.84	372.45	2.54	Si
SLV 12	143750	0.46	7782	-2652	146.84	372.45	2.54	Si
SLV 14	143750	0.46	8052	-2744	146.84	384.46	2.62	Si
SLV 13	143750	0.46	8052	-2744	146.84	384.46	2.62	Si
SLV 8	143750	0.46	11944	-4070	146.84	550.85	3.75	Si
SLV 7	143750	0.46	11944	-4070	146.84	550.85	3.75	Si
SLV 9	143750	0.46	15667	-5339	146.84	698.17	4.75	Si
SLV 10	143750	0.46	15667	-5339	146.84	698.17	4.75	Si

Verifica dei meccanismi locali di collasso con analisi cinematica lineare

forza di aggancio al piano = 0 quota mezzeria = 10.3 Wa = 0.05 Ta = 0.0682

Comb.	N top	N base	V orto	α0	M*	e*	a0*	aLim	Verifica
SLV 3	-5059	-4935	31	0.045	685.1	0.933	0.70678	9.51147	No
SLV 4	-5059	-4935	31	0.045	685.1	0.933	0.70678	9.51147	No
SLV 8	-3821	-2196	51	0.042	560.4	0.921	0.65912	8.47445	No
SLV 7	-3821	-2196	51	0.042	560.4	0.921	0.65912	8.47445	No
SLV 9	-2548	-8044	-51	0.041	433.4	0.906	0.66529	8.47445	No
SLV 10	-2548	-8044	-51	0.041	433.4	0.906	0.66529	8.47445	No
SLV 2	-5010	-6826	3	0.05	680.2	0.932	0.77839	9.51147	No
SLV 1	-5010	-6826	3	0.05	680.2	0.932	0.77839	9.51147	No
SLV 6	-3658	-8500	-41	0.044	544.1	0.919	0.69401	8.47445	No
SLV 5	-3658	-8500	-41	0.044	544.1	0.919	0.69401	8.47445	No

Tabella dei coefficienti di sicurezza minimi

Stato limite	Coeff.s.	Comb.	Verifica
PF_SLU	6.003	SLU 40	Si
V_SLU	5.042	SLU 84	Si
PF_SLV	1.592	SLV 7	Si
V_SLV	1.173	SLV 7	Si
PFFP_SLV	1.887	SLV 15	Si
R_SLV	0.074	SLV 3	No

Maschio 199

Verifiche condotte secondo D.M. 17-01-18 (N.T.C.)

Dati geometrici

X ini.	Y ini.	X fin.	Y fin.	Quota i.	Quota.s	l	Sp.	h netta	h ini.	h fin.	a	a.s.,sx	a.s.,dx
-8.027	-4.697	-7.763	-4.697	L5	L6	0.264	0.3	3.5	3.5	3.5			

Caratteristiche del materiale

(Circolare 7 21-01-19 C8.5.I) Muratura in mattoni pieni e malta di calce LC2_Corti

fb	fk	fvk0	fmedio	τ0	fv0	μ	ϕ	fv,lim	E	G	FC
600000			345000	9000	20000	0.58	0.77	32500	320000000	128000000	1.2

Verifica a pressoflessione nel piano secondo D.M. 17-01-18 NTC §7.8.2.2.1 in combinazioni non sismiche, γM = 3

Comb.	Quota	N	M	σ0	Mu	c.s.	Verifica
SLU 47	8.55	-3263	-25.22	41188	212.98	8.444	Si
SLU 47	11.66	-1224	55.75	15454	130.98	2.35	Si
SLU 26	8.55	-2919	-18.37	36845	211.07	11.49	Si
SLU 26	11.66	-1120	48.22	14137	122.21	2.534	Si
SLU 5	8.55	-2764	-23.22	34895	208.64	8.985	Si
SLU 5	11.66	-1042	49.67	13157	115.39	2.323	Si
SLU 55	8.55	-3389	-14.13	42780	212.47	15.038	Si
SLU 55	11.66	-1290	51.16	16281	136.26	2.663	Si

Comb.	Quota	N	M	σ0	Mu	c.s.	Verifica
SLU 2	8.55	-2667	-18.2	33670	206.61	11.354	Si
SLU 2	11.66	-948	46.27	11972	106.82	2.309	Si
SLU 44	8.55	-3166	-20.2	39963	212.94	10.542	Si
SLU 44	11.66	-1130	52.35	14269	123.11	2.352	Si
SLU 13	8.55	-2890	-12.13	36487	210.7	17.373	Si
SLU 13	11.66	-1108	45.09	13983	121.16	2.687	Si
SLU 23	8.55	-2822	-13.35	35620	209.66	15.71	Si
SLU 23	11.66	-1026	44.82	12952	113.94	2.542	Si
SLU 68	8.55	-3417	-20.37	43138	212.27	10.419	Si
SLU 68	11.66	-1302	54.3	16435	137.22	2.527	Si
SLU 65	8.55	-3320	-15.35	41914	212.83	13.868	Si
SLU 65	11.66	-1208	50.9	15250	129.65	2.547	Si

Verifica a pressoflessione nel piano secondo D.M. 17-01-18 NTC §7.8.2.2.1 in combinazioni sismiche, γM = 2

Comb.	Quota	N	M	σ0	Mu	c.s.	Verifica
SLV 2	8.55	-2333	11.8	29447	233.78	19.808	Si
SLV 2	11.66	272	4.59	0	0	0	No, Trazione
SLV 4	8.55	-2778	-518.06	0	0	0	No, e>l/2
SLV 4	11.66	-1664	142.22	21001	181.91	1.279	Si
SLV 7	8.55	-2851	-956.65	0	0	0	No, e>l/2
SLV 7	11.66	-3950	263.23	49862	308.72	1.173	Si
SLV 3	8.55	-2778	-518.06	0	0	0	No, e>l/2
SLV 3	11.66	-1664	142.22	21001	181.91	1.279	Si
SLV 8	8.55	-2851	-956.65	0	0	0	No, e>l/2
SLV 8	11.66	-3950	263.23	49862	308.72	1.173	Si
SLV 9	8.55	-986	963.5	0	0	0	No, e>l/2
SLV 9	11.66	2478	-229.45	0	0	0	No, Trazione
SLV 5	8.55	-1368	809.57	0	0	0	No, e>l/2
SLV 5	11.66	2502	-195.54	0	0	0	No, Trazione
SLV 6	8.55	-1368	809.57	0	0	0	No, e>l/2
SLV 6	11.66	2502	-195.54	0	0	0	No, Trazione
SLV 1	8.55	-2333	11.8	29447	233.78	19.808	Si
SLV 1	11.66	272	4.59	0	0	0	No, Trazione
SLV 10	8.55	-986	963.5	0	0	0	No, e>l/2
SLV 10	11.66	2478	-229.45	0	0	0	No, Trazione

Verifica a taglio nel piano secondo D.M. 17-01-18 (N.T.C.) §7.8.2.2.2 con rottura per scorrimento in combinazioni non sismiche, γM = 3

Comb.	Quota	N	V par	M	σ0	σN	I'	fvd	Vt scorr.	Vt fess.diag.	Vt,lim	c.s.	Verifica
SLU 68	8.55	-3417	-79	-20.37		43138	0.2641	10833	858			10.87	Si
SLU 68	11.66	-1302	475	54.3		16435	0.2641	7747	614			1.29	Si
SLU 47	8.55	-3263	-81	-25.22		41188	0.2641	10833	858			10.61	Si
SLU 47	11.66	-1224	445	55.75		15727	0.2595	7652	596			1.34	Si
SLU 44	8.55	-3166	-79	-20.2		39963	0.2641	10833	858			10.82	Si
SLU 44	11.66	-1130	429	52.35		14652	0.2572	7509	579			1.35	Si
SLU 76	8.55	-3544	-72	-9.28		44730	0.2641	10833	858			11.89	Si
SLU 76	11.66	-1367	493	49.72		17261	0.2641	7857	622			1.26	Si
SLU 73	8.55	-3447	-71	-4.25		43505	0.2641	10833	858			12.17	Si
SLU 73	11.66	-1274	476	46.32		16076	0.2641	7699	610			1.28	Si
SLU 52	8.55	-3292	-72	-9.1		41555	0.2641	10833	858			11.84	Si
SLU 52	11.66	-1196	447	47.76		15096	0.2641	7568	600			1.34	Si
SLU 55	8.55	-3389	-74	-14.13		42780	0.2641	10833	858			11.58	Si
SLU 55	11.66	-1290	463	51.16		16281	0.2641	7726	612			1.32	Si
SLU 65	8.55	-3320	-77	-15.35		41914	0.2641	10833	858			11.1	Si
SLU 65	11.66	-1208	458	50.9		15250	0.2641	7589	601			1.31	Si
SLU 34	8.55	-3045	-64	-7.28		38437	0.2641	10681	846			13.12	Si
SLU 34	11.66	-1185	442	43.64		14964	0.2641	7551	598			1.35	Si
SLU 31	8.55	-2948	-63	-2.25		37212	0.2641	10517	833			13.25	Si
SLU 31	11.66	-1092	426	40.24		13779	0.2641	7393	586			1.37	Si

Verifica a taglio nel piano secondo D.M. 17-01-18 (N.T.C.) §7.8.2.2.2 con rottura per scorrimento in combinazioni sismiche, γM = 2

Comb.	Quota	N	V par	M	σ0	σN	I'	fvd	Vt scorr.	Vt fess.diag.	Vt,lim	c.s.	Verifica
SLV 2	8.55	-2333	-138	11.8		29447	0.2641	14223	1127			8.19	Si
SLV 2	11.66	272	183	4.59		0	0	8333	0			0	No, Vu<V
SLV 10	8.55	-986	680	963.5		0	0	8333	0			0	No, Vu<V
SLV 10	11.66	2478	-1331	-229.45		0	0	8333	0			0	No, Vu<V
SLV 9	8.55	-986	680	963.5		0	0	8333	0			0	No, Vu<V
SLV 9	11.66	2478	-1331	-229.45		0	0	8333	0			0	No, Vu<V
SLV 3	8.55	-2778	-504	-518.06		0	0	8333	0			0	No, Vu<V
SLV 3	11.66	-1664	1039	142.22		39712	0.1396	16250	681			0.66	No, Vu<V
SLV 1	8.55	-2333	-138	11.8		29447	0.2641	14223	1127			8.19	Si
SLV 1	11.66	272	183	4.59		0	0	8333	0			0	No, Vu<V
SLV 5	8.55	-1368	500	809.57		0	0	8333	0			0	No, Vu<V
SLV 5	11.66	2502	-1093	-195.54		0	0	8333	0			0	No, Vu<V
SLV 6	8.55	-1368	500	809.57		0	0	8333	0			0	No, Vu<V
SLV 6	11.66	2502	-1093	-195.54		0	0	8333	0			0	No, Vu<V
SLV 8	8.55	-2851	-722	-956.65		0	0	8333	0			0	No, Vu<V
SLV 8	11.66	-3950	1761	263.23		67114	0.1962	16250	956			0.54	No, Vu<V
SLV 4	8.55	-2778	-504	-518.06		0	0	8333	0			0	No, Vu<V
SLV 4	11.66	-1664	1039	142.22		39712	0.1396	16250	681			0.66	No, Vu<V
SLV 7	8.55	-2851	-722	-956.65		0	0	8333	0			0	No, Vu<V
SLV 7	11.66	-3950	1761	263.23		67114	0.1962	16250	956			0.54	No, Vu<V

Verifica a pressoflessione fuori piano D.M. 17-01-18 (N.T.C.)

quota 10.3 Wa 0.05 denominatore 8 γM = 2

Comb.	fd	Sa	σ0	N	M	Mc	Coeff.s.	Verifica
SLV 6	143750	0.46	0	1999	34.13	0	0	No, Trazione
SLV 10	143750	0.46	0	1609	34.13	0	0	No, Trazione
SLV 5	143750	0.46	0	1999	34.13	0	0	No, Trazione
SLV 9	143750	0.46	0	1609	34.13	0	0	No, Trazione

Comb.	fd	Sa	σ0	N	M	Mc	Coeff.s.	Verifica
SLV 1	143750	0.46	0	285	34.13	0	0	No, Trazione
SLV 2	143750	0.46	0	285	34.13	0	0	No, Trazione
SLV 14	143750	0.46	12782	-1013	34.13	136	3.98	Si
SLV 13	143750	0.46	12782	-1013	34.13	136	3.98	Si
SLV 4	143750	0.46	19854	-1573	34.13	197.59	5.79	Si
SLV 3	143750	0.46	19854	-1573	34.13	197.59	5.79	Si

Verifica dei meccanismi locali di collasso con analisi cinematica lineare

forza di aggancio al piano = 0 quota mezzeria = 10.3 Wa = 0.05 Ta = 0.0682

Comb.	N top	N base	V orto	α0	M*	e*	a0*	aLim	Verifica
SLV 10	2650	-986	-13	0	0	0	0	8.47445	No, Trazione
SLV 13	334	-1059	-4	0	0	0	0	9.51147	No, Trazione
SLV 14	334	-1059	-4	0	0	0	0	9.51147	No, Trazione
SLV 6	2669	-1368	-13	0	0	0	0	8.47445	No, Trazione
SLV 9	2650	-986	-13	0	0	0	0	8.47445	No, Trazione
SLV 5	2669	-1368	-13	0	0	0	0	8.47445	No, Trazione
SLV 2	398	-2333	-3	0	0	0	0	9.51147	No, Trazione
SLV 1	398	-2333	-3	0	0	0	0	9.51147	No, Trazione
SLV 7	-3884	-2851	14	0.042	434.4	0.972	0.62904	8.47445	No
SLV 8	-3884	-2851	14	0.042	434.4	0.972	0.62904	8.47445	No

Tabella dei coefficienti di sicurezza minimi

Stato limite	Coeff.s.	Comb.	Verifica
PF_SLU	2.309	SLU 2	Si
V_SLU	1.263	SLU 76	Si
PF_SLV	0	SLV 14	No
V_SLV	0	SLV 1	No
PFFP_SLV	0	SLV 10	No
R_SLV	0	SLV 14	No

Maschio 200

Verifiche condotte secondo D.M. 17-01-18 (N.T.C.)

Dati geometrici

X ini.	Y ini.	X fin.	Y fin.	Quota i.	Quota.s	l	Sp.	h netta	h ini.	h fin.	a	a.s.,sx	a.s.,dx
-9.448	-3.169	-11.003	-3.169	L5	L6	1.555	0.28	3.5	3.5	3.5			

Caratteristiche del materiale

(Circolare 7 21-01-19 C8.5.I) Muratura in mattoni pieni e malta di calce LC2_Corti

fb	fk	fvk0	fmedio	τ0	fv0	μ	ϕ	fv,lim	E	G	FC
600000			345000	9000	20000	0.58	0.77	32500	320000000	128000000	1.2

Verifica a pressoflessione nel piano secondo D.M. 17-01-18 NTC §7.8.2.2.1 in combinazioni non sismiche, γM = 3

Comb.	Quota	N	M	σ0	Mu	c.s.	Verifica
SLU 82	8.55	-9094	1596.44	20888	5256.98	3.293	Si
SLU 82	10.65	-10590	-1770.03	24324	5774.56	3.262	Si
SLU 41	8.55	-7645	1331.91	17559	4662.21	3.5	Si
SLU 41	10.65	-9051	-1511.63	20788	5240.58	3.467	Si
SLU 42	8.55	-7517	1365.48	17266	4605.27	3.373	Si
SLU 42	10.65	-8972	-1492.19	20609	5210.69	3.492	Si
SLU 73	8.55	-8864	1515.73	20360	5168.87	3.41	Si
SLU 73	10.65	-10126	-1633.68	23258	5624.44	3.443	Si
SLU 84	8.55	-9351	1533.08	21478	5352.97	3.492	Si
SLU 84	10.65	-10662	-1704.75	24490	5797.07	3.401	Si
SLU 31	8.55	-7030	1348.12	16147	4382.03	3.25	Si
SLU 31	10.65	-8436	-1421.11	19376	4998.3	3.517	Si
SLU 81	8.55	-9222	1562.87	21181	5305.07	3.394	Si
SLU 81	10.65	-10668	-1789.47	24504	5798.91	3.241	Si
SLU 83	8.55	-9479	1499.51	21772	5399.61	3.601	Si
SLU 83	10.65	-10740	-1724.19	24670	5821.17	3.376	Si
SLU 40	8.55	-7260	1428.83	16675	4488.6	3.141	Si
SLU 40	10.65	-8900	-1557.47	20443	5182.83	3.328	Si
SLU 39	8.55	-7388	1395.26	16969	4546.98	3.259	Si
SLU 39	10.65	-8978	-1576.91	20622	5212.96	3.306	Si

Verifica a pressoflessione nel piano secondo D.M. 17-01-18 NTC §7.8.2.2.1 in combinazioni sismiche, γM = 2

Comb.	Quota	N	M	σ0	Mu	c.s.	Verifica
SLV 16	8.55	-8578	-1803.82	19703	5593.53	3.101	Si
SLV 16	10.65	-3416	1537.84	7847	2485.34	1.616	Si
SLV 8	8.55	-3429	1848.45	7876	2494.03	1.349	Si
SLV 8	10.65	-5239	-1158.71	12033	3671.86	3.169	Si
SLV 4	8.55	-3381	3751.39	0	0	0	No, e>l/2
SLV 4	10.65	-9308	-3328.79	21379	5969.99	1.793	Si
SLV 1	8.55	-4899	3715.91	11252	3457.8	0.931	No, M>Mu
SLV 1	10.65	-11027	-3728.87	25329	6796	1.823	Si
SLV 2	8.55	-4899	3715.91	11252	3457.8	0.931	No, M>Mu
SLV 2	10.65	-11027	-3728.87	25329	6796	1.823	Si
SLV 6	8.55	-8489	1730.2	19498	5546.34	3.206	Si
SLV 6	10.65	-10972	-2492.31	25202	6770.76	2.717	Si
SLV 3	8.55	-3381	3751.39	0	0	0	No, e>l/2
SLV 3	10.65	-9308	-3328.79	21379	5969.99	1.793	Si
SLV 5	8.55	-8489	1730.2	19498	5546.34	3.206	Si
SLV 5	10.65	-10972	-2492.31	25202	6770.76	2.717	Si
SLV 15	8.55	-8578	-1803.82	19703	5593.53	3.101	Si
SLV 15	10.65	-3416	1537.84	7847	2485.34	1.616	Si

Comb.	Quota	N	M	σ0	Mu	c.s.	Verifica
SLV 7	8.55	-3429	1848.45	7876	2494.03	1.349	Si
SLV 7	10.65	-5239	-1158.71	12033	3671.86	3.169	Si

Verifica a taglio nel piano secondo D.M. 17-01-18 (N.T.C.) §7.8.2.2.2 con rottura per scorrimento in combinazioni non sismiche, γM = 3

Comb.	Quota	N	V par	M	σ0	σN	l'	fvd	Vt scorr.	Vt fess.diag.	Vt,lim	c.s.	Verifica
SLU 75	8.55	-9325	2453	1458.91		21419	1.5549	8411	3662			1.49	Si
SLU 75	10.65	-10466	2506	-1630.01		24039	1.5549	8761	3814			1.52	Si
SLU 81	8.55	-9222	2644	1562.87		21181	1.5549	8380	3648			1.38	Si
SLU 81	10.65	-10668	2691	-1789.47		24504	1.5549	8823	3841			1.43	Si
SLU 82	8.55	-9094	2668	1596.44		20888	1.5549	8341	3631			1.36	Si
SLU 82	10.65	-10590	2733	-1770.03		24324	1.5549	8799	3831			1.4	Si
SLU 40	8.55	-7260	2375	1428.83		16675	1.5549	7779	3387			1.43	Si
SLU 40	10.65	-8900	2436	-1557.47		20443	1.5549	8281	3605			1.48	Si
SLU 84	8.55	-9351	2541	1533.08		21478	1.5549	8419	3666			1.44	Si
SLU 84	10.65	-10662	2593	-1704.75		24490	1.5549	8821	3840			1.48	Si
SLU 39	8.55	-7388	2351	1395.26		16969	1.5549	7818	3404			1.45	Si
SLU 39	10.65	-8978	2394	-1576.91		20622	1.5549	8305	3616			1.51	Si
SLU 74	8.55	-9453	2429	1425.34		21713	1.5549	8451	3679			1.51	Si
SLU 74	10.65	-10544	2464	-1649.46		24219	1.5549	8785	3825			1.55	Si
SLU 83	8.55	-9479	2517	1499.51		21772	1.5549	8459	3683			1.46	Si
SLU 83	10.65	-10740	2551	-1724.19		24670	1.5549	8845	3851			1.51	Si
SLU 31	8.55	-7030	2232	1348.12		16147	1.5549	7709	3356			1.5	Si
SLU 31	10.65	-8436	2300	-1421.11		19376	1.5549	8139	3543			1.54	Si
SLU 73	8.55	-8864	2525	1515.73		20360	1.5549	8270	3601			1.43	Si
SLU 73	10.65	-10126	2597	-1633.68		23258	1.5549	8657	3769			1.45	Si

Verifica a taglio nel piano secondo D.M. 17-01-18 (N.T.C.) §7.8.2.2.2 con rottura per scorrimento in combinazioni sismiche, γM = 2

Comb.	Quota	N	V par	M	σ0	σN	l'	fvd	Vt scorr.	Vt fess.diag.	Vt,lim	c.s.	Verifica
SLV 15	8.55	-8578	-3494	-1803.82		19703	1.5549	12274	5344			1.53	Si
SLV 15	10.65	-3416	-2624	1537.84		12426	0.9818	10819	2974			1.13	Si
SLV 1	8.55	-4899	6784	3715.91		308481	0.0567	16250	258			0.04	No, Vu<V
SLV 1	10.65	-11027	5963	-3728.87		29884	1.3179	14310	5281			0.89	No, Vu<V
SLV 7	8.55	-3429	2919	1848.45		17125	0.7151	11758	2354			0.81	No, Vu<V
SLV 7	10.65	-5239	554	-1158.71		12033	1.5549	10740	4676			8.43	Si
SLV 8	8.55	-3429	2919	1848.45		17125	0.7151	11758	2354			0.81	No, Vu<V
SLV 8	10.65	-5239	554	-1158.71		12033	1.5549	10740	4676			8.43	Si
SLV 16	8.55	-8578	-3494	-1803.82		19703	1.5549	12274	5344			1.53	Si
SLV 16	10.65	-3416	-2624	1537.84		12426	0.9818	10819	2974			1.13	Si
SLV 4	8.55	-3381	6637	3751.39		0	0	8333	0			0	No, Vu<V
SLV 4	10.65	-9308	4640	-3328.79		26395	1.2594	13612	4800			1.03	Si
SLV 5	8.55	-8489	3409	1730.2		19498	1.5549	12233	5326			1.56	Si
SLV 5	10.65	-10972	4964	-2492.31		25202	1.5549	13374	5822			1.17	Si
SLV 3	8.55	-3381	6637	3751.39		0	0	8333	0			0	No, Vu<V
SLV 3	10.65	-9308	4640	-3328.79		26395	1.2594	13612	4800			1.03	Si
SLV 6	8.55	-8489	3409	1730.2		19498	1.5549	12233	5326			1.56	Si
SLV 6	10.65	-10972	4964	-2492.31		25202	1.5549	13374	5822			1.17	Si
SLV 2	8.55	-4899	6784	3715.91		308481	0.0567	16250	258			0.04	No, Vu<V
SLV 2	10.65	-11027	5963	-3728.87		29884	1.3179	14310	5281			0.89	No, Vu<V

Verifica a pressoflessione fuori piano D.M. 17-01-18 (N.T.C.)

quota 10.3 Wa 0.05 denominatore 8 γM = 2

Comb.	fd	Sa	σ0	N	M	Mc	Coeff.s.	Verifica
SLV 12	143750	0.46	8467	-3686	187.88	480.31	2.56	Si
SLV 11	143750	0.46	8467	-3686	187.88	480.31	2.56	Si
SLV 16	143750	0.46	9265	-4034	187.88	521.91	2.78	Si
SLV 15	143750	0.46	9265	-4034	187.88	521.91	2.78	Si
SLV 7	143750	0.46	11733	-5108	187.88	646.48	3.44	Si
SLV 8	143750	0.46	11733	-5108	187.88	646.48	3.44	Si
SLV 13	143750	0.46	13216	-5754	187.88	718.4	3.82	Si
SLV 14	143750	0.46	13216	-5754	187.88	718.4	3.82	Si
SLV 3	143750	0.46	20153	-8774	187.88	1025.76	5.46	Si
SLV 4	143750	0.46	20153	-8774	187.88	1025.76	5.46	Si

Verifica dei meccanismi locali di collasso con analisi cinematica lineare

forza di aggancio al piano = 0 quota mezzeria = 10.3 Wa = 0.05 Ta = 0.0731

Comb.	N top	N base	V orto	α0	M*	e*	a0*	aLim	Verifica
SLV 8	-3392	-3429	-229	0.003	567.2	0.907	0.05535	9.02602	No
SLV 7	-3392	-3429	-229	0.003	567.2	0.907	0.05535	9.02602	No
SLV 10	-4573	-10048	230	0.011	685	0.918	0.16755	9.02602	No
SLV 9	-4573	-10048	230	0.011	685	0.918	0.16755	9.02602	No
SLV 4	-3340	-3381	-157	0.018	562.1	0.906	0.2952	10.21601	No
SLV 3	-3340	-3381	-157	0.018	562.1	0.906	0.2952	10.21601	No
SLV 11	-3699	-4988	-171	0.017	597.7	0.91	0.27349	9.02602	No
SLV 12	-3699	-4988	-171	0.017	597.7	0.91	0.27349	9.02602	No
SLV 5	-4266	-8489	172	0.019	654.3	0.916	0.30626	9.02602	No
SLV 6	-4266	-8489	172	0.019	654.3	0.916	0.30626	9.02602	No

Tabella dei coefficienti di sicurezza minimi

Stato limite	Coeff.s.	Comb.	Verifica
PF_SLU	3.141	SLU 40	Si
V_SLU	1.361	SLU 82	Si
PF_SLV	0	SLV 3	No
V_SLV	0	SLV 3	No
PFFP_SLV	2.556	SLV 11	Si
R_SLV	0.006	SLV 7	No

Maschio 201

Verifiche condotte secondo D.M. 17-01-18 (N.T.C.)

Dati geometrici

X ini.	Y ini.	X fin.	Y fin.	Quota i.	Quota.s	l	Sp.	h netta	h ini.	h fin.	a	a.s.,sx	a.s.,dx
-7.763	-4.697	-7.763	-4.403	L5	L6	0.293	0.28	3.5	3.5	3.5			

Caratteristiche del materiale

(Circolare 7 21-01-19 C8.5.I) Muratura in mattoni pieni e malta di calce LC2_Corti

fb	fk	fvk0	fmedio	τ0	fv0	μ	ϕ	fv,lim	E	G	FC
600000			345000	9000	20000	0.58	0.77	32500	320000000	128000000	1.2

Verifica a pressoflessione nel piano secondo D.M. 17-01-18 NTC §7.8.2.2.1 in combinazioni non sismiche, γM = 3

Comb.	Quota	N	M	σ0	Mu	c.s.	Verifica
SLU 73	8.55	-1494	-135.79	18183	170.28	1.254	Si
SLU 73	11.66	-1100	29.55	13384	134.84	4.563	Si
SLU 31	8.55	-1148	-125.75	13972	139.56	1.11	Si
SLU 31	11.66	-882	28.75	10736	112.37	3.908	Si
SLU 10	8.55	-1030	-118.43	12538	127.89	1.08	Si
SLU 10	11.66	-813	26.63	9899	104.84	3.938	Si
SLU 44	8.55	-1278	-116.09	15557	151.73	1.307	Si
SLU 44	11.66	-986	23.4	12001	123.37	5.273	Si
SLU 2	8.55	-932	-106.06	11346	117.73	1.11	Si
SLU 2	11.66	-769	22.59	9353	99.82	4.418	Si
SLU 65	8.55	-1396	-123.41	16991	162.12	1.314	Si
SLU 65	11.66	-1055	25.52	12838	130.38	5.109	Si
SLU 13	8.55	-1166	-111.1	14193	141.3	1.272	Si
SLU 13	11.66	-916	22.23	11148	116.01	5.219	Si
SLU 52	8.55	-1376	-128.47	16749	160.41	1.249	Si
SLU 52	11.66	-1031	27.43	12547	127.97	4.666	Si
SLU 23	8.55	-1050	-113.38	12780	129.91	1.146	Si
SLU 23	11.66	-837	24.72	10190	107.48	4.348	Si
SLU 34	8.55	-1284	-118.42	15628	152.26	1.286	Si
SLU 34	11.66	-985	24.35	11985	123.23	5.06	Si

Verifica a pressoflessione nel piano secondo D.M. 17-01-18 NTC §7.8.2.2.1 in combinazioni sismiche, γM = 2

Comb.	Quota	N	M	σ0	Mu	c.s.	Verifica
SLV 9	8.55	1077	-700.05	0	0	0	No, Trazione
SLV 9	11.66	-5273	562.93	64176	367.34	0.653	No, M>Mu
SLV 3	8.55	-785	100.87	9548	106.12	1.052	Si
SLV 3	11.66	554	-121.38	0	0	0	No, Trazione
SLV 6	8.55	1930	-731.35	0	0	0	No, Trazione
SLV 6	11.66	-5234	588.37	63704	367.6	0.625	No, M>Mu
SLV 1	8.55	927	-300.09	0	0	0	No, Trazione
SLV 1	11.66	-2097	219.89	25518	243.4	1.107	Si
SLV 7	8.55	-3776	605.17	0	0	0	No, e>l/2
SLV 7	11.66	3601	-549.2	0	0	0	No, Trazione
SLV 4	8.55	-785	100.87	9548	106.12	1.052	Si
SLV 4	11.66	554	-121.38	0	0	0	No, Trazione
SLV 10	8.55	1077	-700.05	0	0	0	No, Trazione
SLV 10	11.66	-5273	562.93	64176	367.34	0.653	No, M>Mu
SLV 8	8.55	-3776	605.17	0	0	0	No, e>l/2
SLV 8	11.66	3601	-549.2	0	0	0	No, Trazione
SLV 2	8.55	927	-300.09	0	0	0	No, Trazione
SLV 2	11.66	-2097	219.89	25518	243.4	1.107	Si
SLV 5	8.55	1930	-731.35	0	0	0	No, Trazione
SLV 5	11.66	-5234	588.37	63704	367.6	0.625	No, M>Mu

Verifica a taglio nel piano secondo D.M. 17-01-18 (N.T.C.) §7.8.2.2.2 con rottura per scorrimento in combinazioni non sismiche, γM = 3

Comb.	Quota	N	V par	M	σ0	σN	l'	fvd	Vt scorr.	Vt fess.diag.	Vt,lim	c.s.	Verifica
SLU 73	8.55	-1494	-164	-135.79		31852	0.1675	9802	460			2.8	Si
SLU 73	11.66	-1100	621	29.55		13384	0.2935	7340	603			0.97	No, Vu<V
SLU 23	8.55	-1050	-139	-113.38		32255	0.1163	9856	321			2.31	Si
SLU 23	11.66	-837	553	24.72		10190	0.2935	6914	568			1.03	Si
SLU 31	8.55	-1148	-149	-125.75		36749	0.1116	10455	327			2.19	Si
SLU 31	11.66	-882	592	28.75		10736	0.2935	6987	574			0.97	No, Vu<V
SLU 34	8.55	-1284	-142	-118.42		28045	0.1635	9295	426			3	Si
SLU 34	11.66	-985	570	24.35		11985	0.2935	7154	588			1.03	Si
SLU 65	8.55	-1396	-154	-123.41		28495	0.175	9355	458			2.97	Si
SLU 65	11.66	-1055	582	25.52		12838	0.2935	7267	597			1.03	Si
SLU 52	8.55	-1376	-157	-128.47		30693	0.1601	9648	433			2.75	Si
SLU 52	11.66	-1031	596	27.43		12547	0.2935	7228	594			1	No, Vu<V
SLU 10	8.55	-1030	-142	-118.43		38609	0.0953	10703	286			2.01	Si
SLU 10	11.66	-813	567	26.63		9899	0.2935	6875	565			1	No, Vu<V
SLU 55	8.55	-1512	-150	-121.13		27021	0.1999	9158	513			3.42	Si
SLU 55	11.66	-1134	574	23.03		13796	0.2935	7395	608			1.06	Si
SLU 76	8.55	-1630	-157	-128.45		28569	0.2038	9365	534			3.4	Si
SLU 76	11.66	-1202	599	25.16		14633	0.2935	7507	617			1.03	Si
SLU 44	8.55	-1278	-147	-116.09		27220	0.1677	9185	431			2.94	Si
SLU 44	11.66	-986	557	23.4		12001	0.2935	7156	588			1.06	Si

Verifica a taglio nel piano secondo D.M. 17-01-18 (N.T.C.) §7.8.2.2.2 con rottura per scorrimento in combinazioni sismiche, γM = 2

Comb.	Quota	N	V par	M	σ0	σN	l'	fvd	Vt scorr.	Vt fess.diag.	Vt,lim	c.s.	Verifica
SLV 2	8.55	927	-419	-300.09		0	0	8333	0			0	No, Vu<V
SLV 2	11.66	-2097	-198	219.89		59636	0.1256	16250	571			2.89	Si
SLV 10	8.55	1077	-704	-700.05		0	0	8333	0			0	No, Vu<V
SLV 10	11.66	-5273	-3267	562.93		157047	0.1199	16250	546			0.17	No, Vu<V
SLV 9	8.55	1077	-704	-700.05		0	0	8333	0			0	No, Vu<V

Comb.	Quota	N	V par	M	σ0	σN	l'	fvd	Vt scorr.	Vt fess.diag.	Vt,lim	c.s.	Verifica
SLV 9	11.66	-5273	-3267	562.93		157047	0.1199	16250	546			0.17	No, Vu<V
SLV 6	8.55	1930	-794	-731.35		0	0	8333	0			0	No, Vu<V
SLV 6	11.66	-5234	-2892	588.37		181557	0.103	16250	468			0.16	No, Vu<V
SLV 8	8.55	-3776	575	605.17		0	0	8333	0			0	No, Vu<V
SLV 8	11.66	3601	3554	-549.2		0	0	8333	0			0	No, Vu<V
SLV 1	8.55	927	-419	-300.09		0	0	8333	0			0	No, Vu<V
SLV 1	11.66	-2097	-198	219.89		59636	0.1256	16250	571			2.89	Si
SLV 3	8.55	-785	-8	100.87		51453	0.0545	16250	248			29.29	Si
SLV 3	11.66	554	1736	-121.38		0	0	8333	0			0	No, Vu<V
SLV 5	8.55	1930	-794	-731.35		0	0	8333	0			0	No, Vu<V
SLV 5	11.66	-5234	-2892	588.37		181557	0.103	16250	468			0.16	No, Vu<V
SLV 7	8.55	-3776	575	605.17		0	0	8333	0			0	No, Vu<V
SLV 7	11.66	3601	3554	-549.2		0	0	8333	0			0	No, Vu<V
SLV 4	8.55	-785	-8	100.87		51453	0.0545	16250	248			29.29	Si
SLV 4	11.66	554	1736	-121.38		0	0	8333	0			0	No, Vu<V

Verifica a pressoflessione fuori piano D.M. 17-01-18 (N.T.C.)

quota 10.3 Wa 0.05 denominatore 8 γM = 2

Comb.	fd	Sa	σ0	N	M	Mc	Coeff.s.	Verifica
SLV 12	143750	0.46	11088	-911	36.28	115.98	3.2	Si
SLV 11	143750	0.46	11088	-911	36.28	115.98	3.2	Si
SLV 8	143750	0.46	12003	-986	36.28	124.51	3.43	Si
SLV 7	143750	0.46	12003	-986	36.28	124.51	3.43	Si
SLV 15	143750	0.46	13947	-1146	36.28	142.12	3.92	Si
SLV 16	143750	0.46	13947	-1146	36.28	142.12	3.92	Si
SLV 4	143750	0.46	16995	-1396	36.28	168.31	4.64	Si
SLV 3	143750	0.46	16995	-1396	36.28	168.31	4.64	Si
SLV 13	143750	0.46	17311	-1422	36.28	170.93	4.71	Si
SLV 14	143750	0.46	17311	-1422	36.28	170.93	4.71	Si

Verifica dei meccanismi locali di collasso con analisi cinematica lineare

forza di aggancio al piano = 0 quota mezzeria = 10.3 Wa = 0.05 Ta = 0.0731

Comb.	N top	N base	V orto	α0	M*	e*	a0*	aLim	Verifica
SLV 2	-741	927	1	0	0	0	0	10.21601	No, Trazione
SLV 10	-978	1077	1	0	0	0	0	9.02602	No, Trazione
SLV 5	-938	1930	2	0	0	0	0	9.02602	No, Trazione
SLV 9	-978	1077	1	0	0	0	0	9.02602	No, Trazione
SLV 6	-938	1930	2	0	0	0	0	9.02602	No, Trazione
SLV 1	-741	927	1	0	0	0	0	10.21601	No, Trazione
SLV 14	-875	-1915	-1	0.048	130.5	0.919	0.76095	10.21601	No
SLV 13	-875	-1915	-1	0.048	130.5	0.919	0.76095	10.21601	No
SLV 15	-747	-3627	-2	0.048	117.7	0.913	0.76736	10.21601	No
SLV 16	-747	-3627	-2	0.048	117.7	0.913	0.76736	10.21601	No

Tabella dei coefficienti di sicurezza minimi

Stato limite	Coeff.s.	Comb.	Verifica
PF_SLU	1.08	SLU 10	Si
V_SLU	0.97	SLU 31	No
PF_SLV	0	SLV 16	No
V_SLV	0	SLV 1	No
PFFP_SLV	3.196	SLV 11	Si
R_SLV	0	SLV 10	No

Maschio 202

Verifiche condotte secondo D.M. 17-01-18 (N.T.C.)

Dati geometrici

X ini.	Y ini.	X fin.	Y fin.	Quota i.	Quota.s	l	Sp.	h netta	h ini.	h fin.	a	a.s.,sx	a.s.,dx
-7.763	-3.313	-7.763	-3.169	L5	L6	0.144	0.28	3.5	3.5	3.5			

Caratteristiche del materiale

(Circolare 7 21-01-19 C8.5.I) Muratura in mattoni pieni e malta di calce LC2_Corti

fb	fk	fvk0	fmedio	τ0	fv0	μ	ϕ	fv,lim	E	G	FC
600000			345000	9000	20000	0.58	0.77	32500	320000000	128000000	1.2

Verifica a pressoflessione nel piano secondo D.M. 17-01-18 NTC §7.8.2.2.1 in combinazioni non sismiche, γM = 3

Comb.	Quota	N	M	σ0	Mu	c.s.	Verifica
SLU 46	8.55	-1010	-15.07	24984	50.54	3.354	Si
SLU 46	11.66	-113	8.75	0	0	0	No, e>l/2
SLU 51	8.55	-948	-12.54	23466	48.74	3.886	Si
SLU 51	11.66	-111	8.91	0	0	0	No, e>l/2
SLU 1	8.55	-713	-13.09	17639	40.32	3.081	Si
SLU 1	11.66	-114	10.8	0	0	0	No, e>l/2
SLU 58	8.55	-968	-16.74	23945	49.32	2.946	Si
SLU 58	11.66	-158	15.15	0	0	0	No, e>l/2
SLU 49	8.55	-984	-13.43	24346	49.8	3.709	Si
SLU 49	11.66	-118	9.44	0	0	0	No, e>l/2
SLU 53	8.55	-1029	-19.27	25464	51.07	2.651	Si
SLU 53	11.66	-160	14.99	0	0	0	No, e>l/2
SLU 56	8.55	-1003	-17.63	24825	50.36	2.857	Si
SLU 56	11.66	-165	15.68	0	0	0	No, e>l/2
SLU 54	8.55	-1133	-19	28028	53.64	2.822	Si
SLU 54	11.66	-118	8.79	0	0	0	No, e>l/2
SLU 50	8.55	-845	-12.81	20902	45.33	3.54	Si
SLU 50	11.66	-154	15.1	0	0	0	No, e>l/2

Comb.	Quota	N	M	σ0	Mu	c.s.	Verifica
SLU 57	8.55	-1107	-17.37	27389	53.04	3.054	Si
SLU 57	11.66	-122	9.48	0	0	0	No, e>l/2

Verifica a pressoflessione nel piano secondo D.M. 17-01-18 NTC §7.8.2.2.1 in combinazioni sismiche, γM = 2

Comb.	Quota	N	M	σ0	Mu	c.s.	Verifica
SLV 8	8.55	1501	-25.52	0	0	0	No, Trazione
SLV 8	11.66	508	-97.77	0	0	0	No, Trazione
SLV 1	8.55	-1481	-45.58	36642	74.85	1.642	Si
SLV 1	11.66	-212	31.26	0	0	0	No, e>l/2
SLV 3	8.55	-112	-46.32	0	0	0	No, e>l/2
SLV 3	11.66	149	-31.99	0	0	0	No, Trazione
SLV 7	8.55	1501	-25.52	0	0	0	No, Trazione
SLV 7	11.66	508	-97.77	0	0	0	No, Trazione
SLV 5	8.55	-3062	-23.04	75752	83.99	3.646	Si
SLV 5	11.66	-692	113.07	0	0	0	No, e>l/2
SLV 4	8.55	-112	-46.32	0	0	0	No, e>l/2
SLV 4	11.66	149	-31.99	0	0	0	No, Trazione
SLV 9	8.55	-3048	-4.46	75408	84.23	18.879	Si
SLV 9	11.66	-744	119.93	0	0	0	No, e>l/2
SLV 10	8.55	-3048	-4.46	75408	84.23	18.879	Si
SLV 10	11.66	-744	119.93	0	0	0	No, e>l/2
SLV 2	8.55	-1481	-45.58	36642	74.85	1.642	Si
SLV 2	11.66	-212	31.26	0	0	0	No, e>l/2
SLV 6	8.55	-3062	-23.04	75752	83.99	3.646	Si
SLV 6	11.66	-692	113.07	0	0	0	No, e>l/2

Verifica a taglio nel piano secondo D.M. 17-01-18 (N.T.C.) §7.8.2.2.2 con rottura per scorrimento in combinazioni non sismiche, γM = 3

Comb.	Quota	N	V par	M	σ0	σN	l'	fvd	Vt scorr.	Vt fess.diag.	Vt,lim	c.s.	Verifica
SLU 51	8.55	-948	2	-12.54		23466	0.1444	8684	351			201	Si
SLU 51	11.66	-111	10	8.91		0	0	5556	0			0	No, Vu<V
SLU 53	8.55	-1029	-32	-19.27		25464	0.1444	8951	362			11.28	Si
SLU 53	11.66	-160	17	14.99		0	0	5556	0			0	No, Vu<V
SLU 48	8.55	-880	-21	-13.69		21782	0.1444	8460	342			15.98	Si
SLU 48	11.66	-161	18	15.64		0	0	5556	0			0	No, Vu<V
SLU 1	8.55	-713	-21	-13.09		17639	0.1444	7907	320			15.05	Si
SLU 1	11.66	-114	13	10.8		0	0	5556	0			0	No, Vu<V
SLU 50	8.55	-845	-20	-12.81		20902	0.1444	8342	337			16.93	Si
SLU 50	11.66	-154	18	15.1		0	0	5556	0			0	No, Vu<V
SLU 59	8.55	-1072	-6	-16.48		26509	0.1444	9090	367			62.34	Si
SLU 59	11.66	-116	10	8.95		0	0	5556	0			0	No, Vu<V
SLU 57	8.55	-1107	-7	-17.37		27389	0.1444	9207	372			50.49	Si
SLU 57	11.66	-122	10	9.48		0	0	5556	0			0	No, Vu<V
SLU 54	8.55	-1133	-10	-19		28028	0.1444	9293	376			36.08	Si
SLU 54	11.66	-118	9	8.79		0	0	5556	0			0	No, Vu<V
SLU 58	8.55	-968	-28	-16.74		23945	0.1444	8748	354			12.83	Si
SLU 58	11.66	-158	18	15.15		0	0	5556	0			0	No, Vu<V
SLU 56	8.55	-1003	-29	-17.63		24825	0.1444	8866	358			12.34	Si
SLU 56	11.66	-165	18	15.68		0	0	5556	0			0	No, Vu<V

Verifica a taglio nel piano secondo D.M. 17-01-18 (N.T.C.) §7.8.2.2.2 con rottura per scorrimento in combinazioni sismiche, γM = 2

Comb.	Quota	N	V par	M	σ0	σN	l'	fvd	Vt scorr.	Vt fess.diag.	Vt,lim	c.s.	Verifica
SLV 3	8.55	-112	-178	-46.32		0	0	8333	0			0	No, Vu<V
SLV 3	11.66	149	-130	-31.99		0	0	8333	0			0	No, Vu<V
SLV 1	8.55	-1481	-207	-45.58		42583	0.1242	16250	565			2.73	Si
SLV 1	11.66	-212	-66	31.26		0	0	8333	0			0	No, Vu<V
SLV 5	8.55	-3062	-124	-23.04		75752	0.1444	16250	657			5.31	Si
SLV 5	11.66	-692	86	113.07		0	0	8333	0			0	No, Vu<V
SLV 8	8.55	1501	-26	-25.52		0	0	8333	0			0	No, Vu<V
SLV 8	11.66	508	-126	-97.77		0	0	8333	0			0	No, Vu<V
SLV 6	8.55	-3062	-124	-23.04		75752	0.1444	16250	657			5.31	Si
SLV 6	11.66	-692	86	113.07		0	0	8333	0			0	No, Vu<V
SLV 9	8.55	-3048	-23	-4.46		75408	0.1444	16250	657			28.29	Si
SLV 9	11.66	-744	153	119.93		0	0	8333	0			0	No, Vu<V
SLV 7	8.55	1501	-26	-25.52		0	0	8333	0			0	No, Vu<V
SLV 7	11.66	508	-126	-97.77		0	0	8333	0			0	No, Vu<V
SLV 4	8.55	-112	-178	-46.32		0	0	8333	0			0	No, Vu<V
SLV 4	11.66	149	-130	-31.99		0	0	8333	0			0	No, Vu<V
SLV 10	8.55	-3048	-23	-4.46		75408	0.1444	16250	657			28.29	Si
SLV 10	11.66	-744	153	119.93		0	0	8333	0			0	No, Vu<V
SLV 2	8.55	-1481	-207	-45.58		42583	0.1242	16250	565			2.73	Si
SLV 2	11.66	-212	-66	31.26		0	0	8333	0			0	No, Vu<V

Verifica a pressoflessione fuori piano D.M. 17-01-18 (N.T.C.)

quota 10.3 Wa 0.05 denominatore 8 γM = 2

Comb.	fd	Sa	σ0	N	M	Mc	Coeff.s.	Verifica
SLV 6	143750	0.46	0	69	17.85	0	0	No, Trazione
SLV 10	143750	0.46	0	-76	17.85	0	0	No, e>t/2
SLV 1	143750	0.46	0	-89	17.85	0	0	No, e>t/2
SLV 5	143750	0.46	0	69	17.85	0	0	No, Trazione
SLV 2	143750	0.46	0	-89	17.85	0	0	No, e>t/2
SLV 9	143750	0.46	0	-76	17.85	0	0	No, e>t/2
SLV 4	143750	0.46	9137	-369	17.85	47.84	2.68	Si
SLV 3	143750	0.46	9137	-369	17.85	47.84	2.68	Si
SLV 13	143750	0.46	14170	-573	17.85	70.89	3.97	Si
SLV 14	143750	0.46	14170	-573	17.85	70.89	3.97	Si

Verifica dei meccanismi locali di collasso con analisi cinematica lineare

forza di aggancio al piano = 0 quota mezzeria = 10.3 Wa = 0.05 Ta = 0.0731

Comb.	N top	N base	V orto	α0	M*	e*	a0*	aLim	Verifica

Comb.	N top	N base	V orto	α0	M*	e*	a0*	aLim	Verifica
SLV 4	142	-112	4	0	0	0	0	10.21601	No, Trazione
SLV 12	308	1515	0	0	0	0	0	9.02602	No, Trazione
SLV 8	339	1501	2	0	0	0	0	9.02602	No, Trazione
SLV 3	142	-112	4	0	0	0	0	10.21601	No, Trazione
SLV 11	308	1515	0	0	0	0	0	9.02602	No, Trazione
SLV 7	339	1501	2	0	0	0	0	9.02602	No, Trazione
SLV 16	37	-66	-3	0	0	0	0	10.21601	No, Trazione
SLV 15	37	-66	-3	0	0	0	0	10.21601	No, Trazione
SLV 13	-164	-1435	-4	0.043	38	0.89	0.70308	10.21601	No
SLV 14	-164	-1435	-4	0.043	38	0.89	0.70308	10.21601	No

Tabella dei coefficienti di sicurezza minimi

Stato limite	Coeff.s.	Comb.	Verifica
PF_SLU	0	SLU 1	No
V_SLU	0	SLU 1	No
PF_SLV	0	SLV 12	No
V_SLV	0	SLV 1	No
PFFP_SLV	0	SLV 6	No
R_SLV	0	SLV 16	No

Maschio 203

Verifiche condotte secondo D.M. 17-01-18 (N.T.C.)

Dati geometrici

X ini.	Y ini.	X fin.	Y fin.	Quota i.	Quota.s	l	Sp.	h netta	h ini.	h fin.	a	a.s.,sx	a.s.,dx
-6.268	-3.169	-6.268	1.141	L5	L6	4.31	0.14	3.5	3.5	3.5			

Caratteristiche del materiale

(Circolare 7 21-01-19 C8.5.I) Muratura in mattoni pieni e malta di calce LC2_Corti

fb	fk	fvk0	fmedio	τ0	fv0	μ	ϕ	fv,lim	E	G	FC
600000			345000	9000	20000	0.58	0.77	32500	320000000	128000000	1.2

Verifica a pressoflessione nel piano secondo D.M. 17-01-18 NTC §7.8.2.2.1 in combinazioni non sismiche, γM = 3

Comb.	Quota	N	M	σ0	Mu	c.s.	Verifica
SLU 28	8.55	-15888	3186.61	26330	23170.93	7.271	Si
SLU 28	12.05	-8465	3414.78	14029	15100.54	4.422	Si
SLU 9	8.55	-13671	2755.46	22657	21267.13	7.718	Si
SLU 9	12.05	-7312	3097.1	12119	13413.77	4.331	Si
SLU 38	8.55	-17362	3439.33	28774	24198.95	7.036	Si
SLU 38	12.05	-8913	3521.27	14771	15724.11	4.465	Si
SLU 17	8.55	-15476	3032.98	25649	22850.19	7.534	Si
SLU 17	12.05	-8021	3210.11	13294	14465.03	4.506	Si
SLU 51	8.55	-16782	3190.29	27812	23817.1	7.465	Si
SLU 51	12.05	-8892	3520.76	14737	15696.25	4.458	Si
SLU 70	8.55	-18998	3621.44	31485	25116.43	6.935	Si
SLU 70	12.05	-10045	3838.45	16648	17223.3	4.487	Si
SLU 80	8.55	-20473	3874.15	33929	25742.29	6.645	Si
SLU 80	12.05	-10493	3944.94	17390	17784.85	4.508	Si
SLU 72	8.55	-18668	3596.64	30937	24950	6.937	Si
SLU 72	12.05	-9784	3831.93	16215	16887.25	4.407	Si
SLU 30	8.55	-15557	3161.81	25783	22914.36	7.247	Si
SLU 30	12.05	-8204	3408.26	13596	14728.27	4.321	Si
SLU 7	8.55	-14002	2780.26	23205	21578.36	7.761	Si
SLU 7	12.05	-7574	3103.61	12552	13806.47	4.449	Si

Verifica a pressoflessione nel piano secondo D.M. 17-01-18 NTC §7.8.2.2.1 in combinazioni sismiche, γM = 2

Comb.	Quota	N	M	σ0	Mu	c.s.	Verifica
SLV 2	8.55	-11308	2037.73	18740	20630.44	10.124	Si
SLV 2	12.05	-5106	3020.11	8462	10240.91	3.391	Si
SLV 7	8.55	-11233	4310.55	18616	20518.9	4.76	Si
SLV 7	12.05	-6120	466.17	10143	12093.98	25.943	Si
SLV 3	8.55	-10392	3261.28	17222	19237.76	5.899	Si
SLV 3	12.05	-5033	2050.1	8342	10106.17	4.93	Si
SLV 5	8.55	-14286	232.04	23675	24820.39	106.964	Si
SLV 5	12.05	-6362	3699.53	10543	12526.56	3.386	Si
SLV 6	8.55	-14286	232.04	23675	24820.39	106.964	Si
SLV 6	12.05	-6362	3699.53	10543	12526.56	3.386	Si
SLV 4	8.55	-10392	3261.28	17222	19237.76	5.899	Si
SLV 4	12.05	-5033	2050.1	8342	10106.17	4.93	Si
SLV 1	8.55	-11308	2037.73	18740	20630.44	10.124	Si
SLV 1	12.05	-5106	3020.11	8462	10240.91	3.391	Si
SLV 8	8.55	-11233	4310.55	18616	20518.9	4.76	Si
SLV 8	12.05	-6120	466.17	10143	12093.98	25.943	Si
SLV 9	8.55	-15922	-92.13	26388	26902.53	292.002	Si
SLV 9	12.05	-7366	3311.89	12207	14287.44	4.314	Si
SLV 10	8.55	-15922	-92.13	26388	26902.53	292.002	Si
SLV 10	12.05	-7366	3311.89	12207	14287.44	4.314	Si

Verifica a taglio nel piano secondo D.M. 17-01-18 (N.T.C.) §7.8.2.2.2 con rottura per scorrimento in combinazioni non sismiche, γM = 3

Comb.	Quota	N	V par	M	σ0	σN	l'	fvd	Vt scorr.	Vt fess.diag.	Vt,lim	c.s.	Verifica
SLU 68	8.55	-18065	-1220	3249.53		29938	4.31	9547	5761			4.72	Si
SLU 68	12.05	-9235	-546	3442.29		15304	4.31	7596	4584			8.4	Si
SLU 10	8.55	-14287	-1138	2296.63		23677	4.31	8713	5257			4.62	Si
SLU 10	12.05	-6944	-472	2273.69		11507	4.31	7090	4278			9.05	Si
SLU 34	8.55	-16759	-1236	3092.21		27775	4.31	9259	5587			4.52	Si

Comb.	Quota	N	V par	M	σ0	σN	l'	fvd	Vt scorr.	Vt fess.diag.	Vt,lim	c.s.	Verifica
SLU 34	12.05	-8364	-555	3131.63		13861	4.31	7404	4467			8.04	Si
SLU 47	8.55	-16179	-1173	2843.18		26813	4.31	9131	5509			4.7	Si
SLU 47	12.05	-8343	-511	3131.12		13827	4.31	7399	4465			8.74	Si
SLU 13	8.55	-14873	-1189	2685.86		24649	4.31	8842	5335			4.49	Si
SLU 13	12.05	-7472	-520	2820.47		12384	4.31	7207	4349			8.36	Si
SLU 26	8.55	-14954	-1209	2814.7		24783	4.31	8860	5346			4.42	Si
SLU 26	12.05	-7655	-540	3018.62		12686	4.31	7247	4373			8.09	Si
SLU 23	8.55	-14368	-1158	2425.47		23811	4.31	8730	5268			4.55	Si
SLU 23	12.05	-7126	-493	2471.84		11810	4.31	7130	4302			8.74	Si
SLU 5	8.55	-13068	-1162	2408.35		21658	4.31	8443	5095			4.38	Si
SLU 5	12.05	-6763	-505	2707.46		11209	4.31	7050	4254			8.42	Si
SLU 2	8.55	-12482	-1111	2019.12		20686	4.31	8314	5016			4.51	Si
SLU 2	12.05	-6235	-457	2160.68		10332	4.31	6933	4183			9.15	Si
SLU 31	8.55	-16173	-1185	2702.98		26803	4.31	9129	5509			4.65	Si
SLU 31	12.05	-7835	-508	2584.86		12985	4.31	7287	4397			8.66	Si

Verifica a taglio nel piano secondo D.M. 17-01-18 (N.T.C.) §7.8.2.2.2 con rottura per scorrimento in combinazioni sismiche, γM = 2

Comb.	Quota	N	V par	M	σ0	σN	l'	fvd	Vt scorr.	Vt fess.diag.	Vt,lim	c.s.	Verifica
SLV 9	8.55	-15922	-9377	-92.13		26388	4.31	13611	8213			0.88	No, Vu<V
SLV 9	12.05	-7366	-7205	3311.89		12207	4.31	10775	6501			0.9	No, Vu<V
SLV 11	8.55	-12870	9143	3986.38		21329	4.31	12599	7602			0.83	No, Vu<V
SLV 11	12.05	-7124	6273	78.53		11807	4.31	10695	6453			1.03	Si
SLV 10	8.55	-15922	-9377	-92.13		26388	4.31	13611	8213			0.88	No, Vu<V
SLV 10	12.05	-7366	-7205	3311.89		12207	4.31	10775	6501			0.9	No, Vu<V
SLV 7	8.55	-11233	9152	4310.55		18616	4.31	12057	7275			0.79	No, Vu<V
SLV 7	12.05	-6120	7061	466.17		10143	4.31	10362	6252			0.89	No, Vu<V
SLV 5	8.55	-14286	-9369	232.04		23675	4.31	13068	7885			0.84	No, Vu<V
SLV 5	12.05	-6362	-6417	3699.53		10543	4.31	10442	6301			0.98	No, Vu<V
SLV 6	8.55	-14286	-9369	232.04		23675	4.31	13068	7885			0.84	No, Vu<V
SLV 6	12.05	-6362	-6417	3699.53		10543	4.31	10442	6301			0.98	No, Vu<V
SLV 12	8.55	-12870	9143	3986.38		21329	4.31	12599	7602			0.83	No, Vu<V
SLV 12	12.05	-7124	6273	78.53		11807	4.31	10695	6453			1.03	Si
SLV 3	8.55	-10392	2679	3261.28		17222	4.31	11778	7107			2.65	Si
SLV 3	12.05	-5033	3263	2050.1		8342	4.31	10002	6035			1.85	Si
SLV 4	8.55	-10392	2679	3261.28		17222	4.31	11778	7107			2.65	Si
SLV 4	12.05	-5033	3263	2050.1		8342	4.31	10002	6035			1.85	Si
SLV 8	8.55	-11233	9152	4310.55		18616	4.31	12057	7275			0.79	No, Vu<V
SLV 8	12.05	-6120	7061	466.17		10143	4.31	10362	6252			0.89	No, Vu<V

Verifica a pressoflessione fuori piano D.M. 17-01-18 (N.T.C.)

quota 10.3 Wa 0.03 denominatore 8 γM = 2

Comb.	fd	Sa	σ0	N	M	Mc	Coeff.s.	Verifica
SLV 3	143750	0.46	11982	-7230	278.57	456.45	1.64	Si
SLV 4	143750	0.46	11982	-7230	278.57	456.45	1.64	Si
SLV 1	143750	0.46	12918	-7795	278.57	487.94	1.75	Si
SLV 2	143750	0.46	12918	-7795	278.57	487.94	1.75	Si
SLV 7	143750	0.46	14146	-8536	278.57	528.31	1.9	Si
SLV 8	143750	0.46	14146	-8536	278.57	528.31	1.9	Si
SLV 12	143750	0.46	16937	-10220	278.57	616.22	2.21	Si
SLV 11	143750	0.46	16937	-10220	278.57	616.22	2.21	Si
SLV 5	143750	0.46	17267	-10419	278.57	626.26	2.25	Si
SLV 6	143750	0.46	17267	-10419	278.57	626.26	2.25	Si

Verifica dei meccanismi locali di collasso con analisi cinematica lineare

forza di aggancio al piano = 0 quota mezzeria = 10.3 Wa = 0.03 Ta = 0.1461

Comb.	N top	N base	V orto	α0	M*	e*	a0*	aLim	Verifica
SLV 16	-8380	-15848	-15	0.022	1154.7	0.93	0.34705	18.99716	No
SLV 15	-8380	-15848	-15	0.022	1154.7	0.93	0.34705	18.99716	No
SLV 11	-7124	-12870	-18	0.022	1028.2	0.923	0.35028	18.80115	No
SLV 12	-7124	-12870	-18	0.022	1028.2	0.923	0.35028	18.80115	No
SLV 5	-6362	-14286	18	0.022	951.7	0.919	0.35547	18.80115	No
SLV 6	-6362	-14286	18	0.022	951.7	0.919	0.35547	18.80115	No
SLV 14	-8453	-16764	-7	0.023	1162.1	0.93	0.35967	18.99716	No
SLV 13	-8453	-16764	-7	0.023	1162.1	0.93	0.35967	18.99716	No
SLV 10	-7366	-15922	11	0.023	1052.5	0.925	0.36015	18.80115	No
SLV 9	-7366	-15922	11	0.023	1052.5	0.925	0.36015	18.80115	No

Tabella dei coefficienti di sicurezza minimi

Stato limite	Coeff.s.	Comb.	Verifica
PF_SLU	4.321	SLU 30	Si
V_SLU	4.384	SLU 5	Si
PF_SLV	3.386	SLV 5	Si
V_SLV	0.795	SLV 7	No
PFFP_SLV	1.639	SLV 3	Si
R_SLV	0.018	SLV 15	No

Maschio 204

Verifiche condotte secondo D.M. 17-01-18 (N.T.C.)

Dati geometrici

X ini.	Y ini.	X fin.	Y fin.	Quota i.	Quota.s	l	Sp.	h netta	h ini.	h fin.	a	a.s.,sx	a.s.,dx
-7.467	-3.169	-8.548	-3.169	L5	L6	1.08	0.28	3.5	3.5	3.5			

Caratteristiche del materiale

(Circolare 7 21-01-19 C8.5.I) Muratura in mattoni pieni e malta di calce LC2_Corti

fb	fk	fvk0	fmedio	τ0	fv0	μ	ϕ	fv,lim	E	G	FC
600000			345000	9000	20000	0.58	0.77	32500	320000000	128000000	1.2

Verifica a pressoflessione nel piano secondo D.M. 17-01-18 NTC §7.8.2.2.1 in combinazioni non sismiche, γM = 3

Comb.	Quota	N	M	σ0	Mu	c.s.	Verifica
SLU 44	9.45	-4020	469.85	13290	1817.34	3.868	Si
SLU 44	11.35	-4102	-499.72	13561	1846.96	3.696	Si
SLU 52	9.45	-4325	500.32	14296	1926.02	3.85	Si
SLU 52	11.35	-4591	-517.42	15175	2017.71	3.9	Si
SLU 65	9.45	-4327	508.59	14303	1926.78	3.788	Si
SLU 65	11.35	-4555	-520.5	15058	2005.66	3.853	Si
SLU 23	9.45	-3305	432.29	10925	1545.72	3.576	Si
SLU 23	11.35	-3754	-432.02	12412	1719.05	3.979	Si
SLU 47	9.45	-4133	416.32	13662	1858	4.463	Si
SLU 47	11.35	-4043	-469.45	13365	1825.48	3.889	Si
SLU 2	9.45	-2998	393.55	9912	1422.55	3.615	Si
SLU 2	11.35	-3302	-411.24	10914	1544.45	3.756	Si
SLU 73	9.45	-4631	539.06	15309	2031.38	3.768	Si
SLU 73	11.35	-5043	-538.21	16673	2166.72	4.026	Si
SLU 31	9.45	-3609	462.76	11931	1663.96	3.596	Si
SLU 31	11.35	-4243	-449.73	14026	1897.25	4.219	Si
SLU 5	9.45	-3111	340.02	10284	1468.26	4.318	Si
SLU 5	11.35	-3242	-380.97	10718	1520.89	3.992	Si
SLU 10	9.45	-3303	424.02	10918	1544.87	3.643	Si
SLU 10	11.35	-3790	-428.94	12529	1732.35	4.039	Si

Verifica a pressoflessione nel piano secondo D.M. 17-01-18 NTC §7.8.2.2.1 in combinazioni sismiche, γM = 2

Comb.	Quota	N	M	σ0	Mu	c.s.	Verifica
SLV 1	9.45	-1555	3195.85	0	0	0	No, e>l/2
SLV 1	11.35	-6294	-1501.19	20806	2820.8	1.879	Si
SLV 11	9.45	-3623	-1681.42	11977	1765.25	1.05	Si
SLV 11	11.35	355	350.13	0	0	0	No, Trazione
SLV 4	9.45	-882	2446.45	0	0	0	No, e>l/2
SLV 4	11.35	-4343	-1284.69	14358	2070.37	1.612	Si
SLV 16	9.45	-6307	-2559.05	20849	2825.46	1.104	Si
SLV 16	11.35	-616	841.82	0	0	0	No, e>l/2
SLV 5	9.45	-4239	2318.22	0	0	0	No, e>l/2
SLV 5	11.35	-7265	-1009.49	24017	3153.03	3.123	Si
SLV 2	9.45	-1555	3195.85	0	0	0	No, e>l/2
SLV 2	11.35	-6294	-1501.19	20806	2820.8	1.879	Si
SLV 6	9.45	-4239	2318.22	0	0	0	No, e>l/2
SLV 6	11.35	-7265	-1009.49	24017	3153.03	3.123	Si
SLV 15	9.45	-6307	-2559.05	20849	2825.46	1.104	Si
SLV 15	11.35	-616	841.82	0	0	0	No, e>l/2
SLV 3	9.45	-882	2446.45	0	0	0	No, e>l/2
SLV 3	11.35	-4343	-1284.69	14358	2070.37	1.612	Si
SLV 12	9.45	-3623	-1681.42	11977	1765.25	1.05	Si
SLV 12	11.35	355	350.13	0	0	0	No, Trazione

Verifica a taglio nel piano secondo D.M. 17-01-18 (N.T.C.) §7.8.2.2.2 con rottura per scorrimento in combinazioni non sismiche, γM = 3

Comb.	Quota	N	V par	M	σ0	σN	l'	fvd	Vt scorr.	Vt fess.diag.	Vt,lim	c.s.	Verifica
SLU 65	9.45	-4327	873	508.59		14303	1.0803	7463	2257			2.58	Si
SLU 65	11.35	-4555	331	-520.5		15058	1.0803	7563	2288			6.9	Si
SLU 52	9.45	-4325	865	500.32		14296	1.0803	7462	2257			2.61	Si
SLU 52	11.35	-4591	299	-517.42		15175	1.0803	7579	2293			7.68	Si
SLU 40	9.45	-4043	863	437.85		13365	1.0803	7338	2220			2.57	Si
SLU 40	11.35	-4406	177	-420.29		14566	1.0803	7498	2268			12.8	Si
SLU 82	9.45	-5065	1014	514.15		16743	1.0803	7788	2356			2.32	Si
SLU 82	11.35	-5207	240	-508.77		17212	1.0803	7851	2375			9.89	Si
SLU 60	9.45	-5213	913	418.46		17234	1.0803	7853	2376			2.6	Si
SLU 60	11.35	-4684	202	-432.46		15486	1.0803	7620	2305			11.39	Si
SLU 61	9.45	-4758	909	475.41		15730	1.0803	7653	2315			2.55	Si
SLU 61	11.35	-4754	249	-487.99		15715	1.0803	7651	2314			9.28	Si
SLU 75	9.45	-5197	923	468.77		17182	1.0803	7846	2374			2.57	Si
SLU 75	11.35	-5145	210	-492.79		17009	1.0803	7823	2367			11.25	Si
SLU 73	9.45	-4631	970	539.06		15309	1.0803	7597	2298			2.37	Si
SLU 73	11.35	-5043	289	-538.21		16673	1.0803	7779	2353			8.13	Si
SLU 84	9.45	-5177	921	460.63		17115	1.0803	7838	2371			2.58	Si
SLU 84	11.35	-5147	186	-478.51		17016	1.0803	7824	2367			12.71	Si
SLU 81	9.45	-5520	1018	457.2		18247	1.0803	7989	2416			2.37	Si
SLU 81	11.35	-5137	193	-453.24		16983	1.0803	7820	2366			12.24	Si

Verifica a taglio nel piano secondo D.M. 17-01-18 (N.T.C.) §7.8.2.2.2 con rottura per scorrimento in combinazioni sismiche, γM = 2

Comb.	Quota	N	V par	M	σ0	σN	l'	fvd	Vt scorr.	Vt fess.diag.	Vt,lim	c.s.	Verifica
SLV 3	9.45	-882	4649	2446.45		0	0	8333	0			0	No, Vu<V
SLV 3	11.35	-4343	1292	-1284.69		21158	0.7331	12565	2579			2	Si
SLV 5	9.45	-4239	3112	2318.22		0	0	8333	0			0	No, Vu<V
SLV 5	11.35	-7265	1762	-1009.49		24017	1.0803	13137	3974			2.26	Si
SLV 4	9.45	-882	4649	2446.45		0	0	8333	0			0	No, Vu<V
SLV 4	11.35	-4343	1292	-1284.69		21158	0.7331	12565	2579			2	Si
SLV 2	9.45	-1555	5331	3195.85		0	0	8333	0			0	No, Vu<V
SLV 2	11.35	-6294	1978	-1501.19		24838	0.905	13301	3370			1.7	Si
SLV 12	9.45	-3623	-1749	-1681.42		56687	0.2283	16250	1039			0.59	No, Vu<V
SLV 12	11.35	355	-1392	350.13		0	0	8333	0			0	No, Vu<V
SLV 15	9.45	-6307	-3969	-2559.05		55859	0.4032	16250	1835			0.46	No, Vu<V
SLV 15	11.35	-616	-1608	841.82		0	0	8333	0			0	No, Vu<V
SLV 16	9.45	-6307	-3969	-2559.05		55859	0.4032	16250	1835			0.46	No, Vu<V
SLV 16	11.35	-616	-1608	841.82		0	0	8333	0			0	No, Vu<V
SLV 1	9.45	-1555	5331	3195.85		0	0	8333	0			0	No, Vu<V
SLV 1	11.35	-6294	1978	-1501.19		24838	0.905	13301	3370			1.7	Si

Comb.	Quota	N	V par	M	σ0	σN	l'	fvd	Vt scorr.	Vt fess.diag.	Vt,lim	c.s.	Verifica
SLV 6	9.45	-4239	3112	2318.22		0	0	8333	0			0	No, Vu<V
SLV 6	11.35	-7265	1762	-1009.49		24017	1.0803	13137	3974			2.26	Si
SLV 11	9.45	-3623	-1749	-1681.42		56687	0.2283	16250	1039			0.59	No, Vu<V
SLV 11	11.35	355	-1392	350.13		0	0	8333	0			0	No, Vu<V

Verifica a pressoflessione fuori piano D.M. 17-01-18 (N.T.C.)

quota 10.3 Wa 0.05 denominatore 8 γM = 2

Comb.	fd	Sa	σ0	N	M	Mc	Coeff.s.	Verifica
SLV 4	143750	0.46	0	-326	130.54	0	0	No, e>t/2
SLV 3	143750	0.46	0	-326	130.54	0	0	No, e>t/2
SLV 2	143750	0.46	3837	-1161	130.54	157.37	1.21	Si
SLV 1	143750	0.46	3837	-1161	130.54	157.37	1.21	Si
SLV 7	143750	0.46	4140	-1252	130.54	169.38	1.3	Si
SLV 8	143750	0.46	4140	-1252	130.54	169.38	1.3	Si
SLV 11	143750	0.46	9526	-2881	130.54	371.96	2.85	Si
SLV 12	143750	0.46	9526	-2881	130.54	371.96	2.85	Si
SLV 5	143750	0.46	13340	-4035	130.54	503.27	3.86	Si
SLV 6	143750	0.46	13340	-4035	130.54	503.27	3.86	Si

Verifica dei meccanismi locali di collasso con analisi cinematica lineare

forza di aggancio al piano = 0 quota mezzeria = 10.3 Wa = 0.05 Ta = 0.0731

Comb.	N top	N base	V orto	α0	M*	e*	a0*	aLim	Verifica
SLV 8	-864	-716	-204	0	251	0.889	0	9.02602	No
SLV 12	-327	157	-144	0	0	0	0	9.02602	No, Trazione
SLV 7	-864	-716	-204	0	251	0.889	0	9.02602	No
SLV 11	-327	157	-144	0	0	0	0	9.02602	No, Trazione
SLV 14	-2370	-4069	146	0.007	395.4	0.907	0.11902	10.21601	No
SLV 13	-2370	-4069	146	0.007	395.4	0.907	0.11902	10.21601	No
SLV 4	-2927	-4558	-153	0.01	450.9	0.915	0.16384	10.21601	No
SLV 3	-2927	-4558	-153	0.01	450.9	0.915	0.16384	10.21601	No
SLV 9	-4433	-7911	197	0.011	602.3	0.932	0.16465	9.02602	No
SLV 10	-4433	-7911	197	0.011	602.3	0.932	0.16465	9.02602	No

Tabella dei coefficienti di sicurezza minimi

Stato limite	Coeff.s.	Comb.	Verifica
PF_SLU	3.576	SLU 23	Si
V_SLU	2.323	SLU 82	Si
PF_SLV	0	SLV 12	No
V_SLV	0	SLV 1	No
PFFP_SLV	0	SLV 3	No
R_SLV	0	SLV 12	No

Maschio 205

Verifiche condotte secondo D.M. 17-01-18 (N.T.C.)

Dati geometrici

X ini.	Y ini.	X fin.	Y fin.	Quota i.	Quota.s	l	Sp.	h netta	h ini.	h fin.	a	a.s.,sx	a.s.,dx
-5.158	1.141	-5.158	5.808	L5	L6	4.667	0.14	3.5	3.5	3.5			

Caratteristiche del materiale

(Circolare 7 21-01-19 C8.5.I) Muratura in mattoni pieni e malta di calce LC2_Corti

fb	fk	fvk0	fmedio	τ0	fv0	μ	ϕ	fv,lim	E	G	FC
600000			345000	9000	20000	0.58	0.77	32500	320000000	128000000	1.2

Verifica a pressoflessione nel piano secondo D.M. 17-01-18 NTC §7.8.2.2.1 in combinazioni non sismiche, γM = 3

Comb.	Quota	N	M	σ0	Mu	c.s.	Verifica
SLU 80	8.55	-21999	-1848.98	33667	30119.64	16.29	Si
SLU 80	12.05	-12542	-2510.76	19194	22371.89	8.91	Si
SLU 70	8.55	-20496	-1824.96	31366	29412.36	16.117	Si
SLU 70	12.05	-11990	-2479.65	18350	21677.87	8.742	Si
SLU 36	8.55	-19045	-1675.39	29146	28541.67	17.036	Si
SLU 36	12.05	-10933	-2299.86	16732	20273.33	8.815	Si
SLU 72	8.55	-20182	-1792.37	30887	29239.86	16.314	Si
SLU 72	12.05	-11808	-2411.72	18071	21442.56	8.891	Si
SLU 7	8.55	-15198	-1458.2	23259	25339.94	17.378	Si
SLU 7	12.05	-9147	-1981.74	13999	17677.83	8.92	Si
SLU 28	8.55	-17228	-1618.78	26366	27191.33	16.797	Si
SLU 28	12.05	-10199	-2200.81	15609	19240.46	8.742	Si
SLU 78	8.55	-22312	-1881.57	34147	30242.2	16.073	Si
SLU 78	12.05	-12724	-2578.7	19473	22595.46	8.762	Si
SLU 30	8.55	-16914	-1586.19	25886	26929	16.977	Si
SLU 30	12.05	-10017	-2132.87	15329	18976.5	8.897	Si
SLU 77	8.55	-22304	-1833.87	34135	30239.24	16.489	Si
SLU 77	12.05	-12702	-2520.58	19439	22567.9	8.953	Si
SLU 69	8.55	-20488	-1777.26	31354	29408.15	16.547	Si
SLU 69	12.05	-11968	-2421.54	18315	21648.85	8.94	Si

Verifica a pressoflessione nel piano secondo D.M. 17-01-18 NTC §7.8.2.2.1 in combinazioni sismiche, γM = 2

Comb.	Quota	N	M	σ0	Mu	c.s.	Verifica
SLV 11	8.55	-18049	2255.84	27622	32597.93	14.45	Si
SLV 11	12.05	-9973	-665.33	15263	20366.4	30.611	Si
SLV 2	8.55	-9702	-3076.52	14848	19889.96	6.465	Si
SLV 2	12.05	-5177	-2140.49	7923	11298.24	5.278	Si
SLV 4	8.55	-11255	-1398.13	17224	22562.41	16.138	Si

Comb.	Quota	N	M	σ0	Mu	c.s.	Verifica
SLV 4	12.05	-6191	-1913.37	9475	13327.97	6.966	Si
SLV 6	8.55	-10573	-4121.49	16181	21406.83	5.194	Si
SLV 6	12.05	-5393	-1876.13	8254	11735.55	6.255	Si
SLV 1	8.55	-9702	-3076.52	14848	19889.96	6.465	Si
SLV 1	12.05	-5177	-2140.49	7923	11298.24	5.278	Si
SLV 12	8.55	-18049	2255.84	27622	32597.93	14.45	Si
SLV 12	12.05	-9973	-665.33	15263	20366.4	30.611	Si
SLV 3	8.55	-11255	-1398.13	17224	22562.41	16.138	Si
SLV 3	12.05	-6191	-1913.37	9475	13327.97	6.966	Si
SLV 5	8.55	-10573	-4121.49	16181	21406.83	5.194	Si
SLV 5	12.05	-5393	-1876.13	8254	11735.55	6.255	Si
SLV 10	8.55	-12873	-3338.79	19701	25197.27	7.547	Si
SLV 10	12.05	-6592	-1422.4	10089	14114.16	9.923	Si
SLV 9	8.55	-12873	-3338.79	19701	25197.27	7.547	Si
SLV 9	12.05	-6592	-1422.4	10089	14114.16	9.923	Si

Verifica a taglio nel piano secondo D.M. 17-01-18 (N.T.C.) §7.8.2.2.2 con rottura per scorrimento in combinazioni non sismiche, γM = 3

Comb.	Quota	N	V par	M	σ0	σN	I'	fvd	Vt scorr.	Vt fess.diag.	Vt,lim	c.s.	Verifica
SLU 77	8.55	-22304	1104	-1833.87		34135	4.6673	10107	6604			5.98	Si
SLU 77	12.05	-12702	703	-2520.58		19439	4.6673	8147	5324			7.57	Si
SLU 78	8.55	-22312	1111	-1881.57		34147	4.6673	10108	6605			5.94	Si
SLU 78	12.05	-12724	698	-2578.7		19473	4.6673	8152	5327			7.63	Si
SLU 41	8.55	-18669	1010	-1365.79		28572	4.6673	9365	6119			6.06	Si
SLU 41	12.05	-10158	650	-1878.32		15546	4.6673	7628	4985			7.66	Si
SLU 84	8.55	-21945	1115	-1619.67		33584	4.6673	10033	6556			5.88	Si
SLU 84	12.05	-11972	693	-2215.28		18322	4.6673	7998	5226			7.54	Si
SLU 80	8.55	-21999	1100	-1848.98		33667	4.6673	10044	6563			5.97	Si
SLU 80	12.05	-12542	677	-2510.76		19194	4.6673	8115	5302			7.83	Si
SLU 42	8.55	-18677	1017	-1413.49		28584	4.6673	9367	6120			6.02	Si
SLU 42	12.05	-10181	645	-1936.44		15580	4.6673	7633	4988			7.73	Si
SLU 79	8.55	-21991	1093	-1801.27		33655	4.6673	10043	6562			6	Si
SLU 79	12.05	-12519	682	-2452.64		19159	4.6673	8110	5299			7.77	Si
SLU 83	8.55	-21937	1108	-1571.96		33572	4.6673	10032	6555			5.91	Si
SLU 83	12.05	-11949	698	-2157.17		18287	4.6673	7994	5223			7.48	Si
SLU 36	8.55	-19045	1013	-1675.39		29146	4.6673	9442	6169			6.09	Si
SLU 36	12.05	-10933	650	-2299.86		16732	4.6673	7786	5088			7.83	Si
SLU 38	8.55	-18731	1002	-1642.8		28666	4.6673	9378	6128			6.12	Si
SLU 38	12.05	-10751	629	-2231.92		16453	4.6673	7749	5064			8.05	Si

Verifica a taglio nel piano secondo D.M. 17-01-18 (N.T.C.) §7.8.2.2.2 con rottura per scorrimento in combinazioni sismiche, γM = 2

Comb.	Quota	N	V par	M	σ0	σN	I'	fvd	Vt scorr.	Vt fess.diag.	Vt,lim	c.s.	Verifica
SLV 1	8.55	-9702	-7169	-3076.52		14848	4.6673	11303	7386			1.03	Si
SLV 1	12.05	-5177	-4768	-2140.49		7923	4.6673	9918	6481			1.36	Si
SLV 7	8.55	-15749	9087	1473.14		24102	4.6673	13154	8595			0.95	No, Vu<V
SLV 7	12.05	-8774	6809	-1119.05		13427	4.6673	11019	7200			1.06	Si
SLV 10	8.55	-12873	-7851	-3338.79		19701	4.6673	12273	8020			1.02	Si
SLV 10	12.05	-6592	-6070	-1422.4		10089	4.6673	10351	6764			1.11	Si
SLV 9	8.55	-12873	-7851	-3338.79		19701	4.6673	12273	8020			1.02	Si
SLV 9	12.05	-6592	-6070	-1422.4		10089	4.6673	10351	6764			1.11	Si
SLV 5	8.55	-10573	-10739	-4121.49		16181	4.6673	11570	7560			0.7	No, Vu<V
SLV 5	12.05	-5393	-7834	-1876.13		8254	4.6673	9984	6524			0.83	No, Vu<V
SLV 12	8.55	-18049	11975	2255.84		27622	4.6673	13858	9055			0.76	No, Vu<V
SLV 12	12.05	-9973	8573	-665.33		15263	4.6673	11386	7440			0.87	No, Vu<V
SLV 11	8.55	-18049	11975	2255.84		27622	4.6673	13858	9055			0.76	No, Vu<V
SLV 11	12.05	-9973	8573	-665.33		15263	4.6673	11386	7440			0.87	No, Vu<V
SLV 2	8.55	-9702	-7169	-3076.52		14848	4.6673	11303	7386			1.03	Si
SLV 2	12.05	-5177	-4768	-2140.49		7923	4.6673	9918	6481			1.36	Si
SLV 8	8.55	-15749	9087	1473.14		24102	4.6673	13154	8595			0.95	No, Vu<V
SLV 8	12.05	-8774	6809	-1119.05		13427	4.6673	11019	7200			1.06	Si
SLV 6	8.55	-10573	-10739	-4121.49		16181	4.6673	11570	7560			0.7	No, Vu<V
SLV 6	12.05	-5393	-7834	-1876.13		8254	4.6673	9984	6524			0.83	No, Vu<V

Verifica a pressoflessione fuori piano D.M. 17-01-18 (N.T.C.)

quota 10.3 Wa 0.03 denominatore 8 γM = 2

Comb.	fd	Sa	σ0	N	M	Mc	Coeff.s.	Verifica
SLV 2	143750	0.46	12403	-8105	301.66	509.73	1.69	Si
SLV 1	143750	0.46	12403	-8105	301.66	509.73	1.69	Si
SLV 3	143750	0.46	13461	-8796	301.66	547.86	1.82	Si
SLV 4	143750	0.46	13461	-8796	301.66	547.86	1.82	Si
SLV 5	143750	0.46	14084	-9203	301.66	569.93	1.89	Si
SLV 6	143750	0.46	14084	-9203	301.66	569.93	1.89	Si
SLV 10	143750	0.46	16582	-10835	301.66	655.51	2.17	Si
SLV 9	143750	0.46	16582	-10835	301.66	655.51	2.17	Si
SLV 7	143750	0.46	17609	-11506	301.66	689.35	2.29	Si
SLV 8	143750	0.46	17609	-11506	301.66	689.35	2.29	Si

Verifica dei meccanismi locali di collasso con analisi cinematica lineare

forza di aggancio al piano = 0 quota mezzeria = 10.3 Wa = 0.03 Ta = 0.1461

Comb.	N top	N base	V orto	α0	M*	e*	a0*	aLim	Verifica
SLV 11	-9973	-18049	-28	0.021	1341.1	0.934	0.32837	18.80115	No
SLV 12	-9973	-18049	-28	0.021	1341.1	0.934	0.32837	18.80115	No
SLV 8	-8774	-15749	-23	0.022	1220.1	0.929	0.33898	18.80115	No
SLV 7	-8774	-15749	-23	0.022	1220.1	0.929	0.33898	18.80115	No
SLV 16	-10189	-18920	-16	0.022	1363	0.935	0.34279	18.99716	No
SLV 15	-10189	-18920	-16	0.022	1363	0.935	0.34279	18.99716	No
SLV 6	-5393	-10573	26	0.022	881.3	0.909	0.35138	18.80115	No
SLV 5	-5393	-10573	26	0.022	881.3	0.909	0.35138	18.80115	No
SLV 10	-6592	-12873	22	0.022	1000.9	0.917	0.35274	18.80115	No
SLV 9	-6592	-12873	22	0.022	1000.9	0.917	0.35274	18.80115	No

Tabella dei coefficienti di sicurezza minimi

Stato limite	Coeff.s.	Comb.	Verifica
PF_SLU	8.742	SLU 70	Si
V_SLU	5.878	SLU 84	Si
PF_SLV	5.194	SLV 5	Si
V_SLV	0.704	SLV 5	No
PFFP_SLV	1.69	SLV 1	Si
R_SLV	0.017	SLV 11	No

Maschio 206

Verifiche condotte secondo D.M. 17-01-18 (N.T.C.)

Dati geometrici

X ini.	Y ini.	X fin.	Y fin.	Quota i.	Quota.s	l	Sp.	h netta	h ini.	h fin.	a	a.s.,sx	a.s.,dx
-5.088	5.808	-5.088	5.94	L5	L6	0.132	0.28	3.5	3.5	3.5			

Caratteristiche del materiale

(Circolare 7 21-01-19 C8.5.I) Muratura in mattoni pieni e malta di calce LC2_Corti

fb	fk	fvk0	fmedio	τ0	fv0	μ	ϕ	fv,lim	E	G	FC
600000			345000	9000	20000	0.58	0.77	32500	320000000	128000000	1.2

Verifica a pressoflessione nel piano secondo D.M. 17-01-18 NTC §7.8.2.2.1 in combinazioni non sismiche, γM = 3

Comb.	Quota	N	M	σ0	Mu	c.s.	Verifica
SLU 81	10.55	-828	-34.1	22465	39.47	1.157	Si
SLU 81	11.35	-1212	52.3	32888	47.57	0.909	No, M>Mu
SLU 42	10.55	-707	-34.61	19182	35.57	1.028	Si
SLU 42	11.35	-1101	49.95	29880	45.89	0.919	No, M>Mu
SLU 79	10.55	-891	-33.46	24183	41.25	1.233	Si
SLU 79	11.35	-1281	52.21	34763	48.34	0.926	No, M>Mu
SLU 84	10.55	-862	-35.92	23392	40.45	1.126	Si
SLU 84	11.35	-1271	54.23	34475	48.23	0.889	No, M>Mu
SLU 74	10.55	-868	-32.97	23549	40.61	1.232	Si
SLU 74	11.35	-1249	51.92	33882	48	0.925	No, M>Mu
SLU 82	10.55	-824	-34.27	22367	39.36	1.149	Si
SLU 82	11.35	-1208	52.01	32780	47.52	0.914	No, M>Mu
SLU 78	10.55	-902	-34.79	24476	41.53	1.194	Si
SLU 78	11.35	-1307	53.84	35469	48.58	0.902	No, M>Mu
SLU 77	10.55	-906	-34.62	24574	41.63	1.202	Si
SLU 77	11.35	-1311	54.13	35577	48.61	0.898	No, M>Mu
SLU 83	10.55	-866	-35.75	23490	40.55	1.134	Si
SLU 83	11.35	-1275	54.52	34583	48.27	0.886	No, M>Mu
SLU 41	10.55	-711	-34.43	19280	35.7	1.037	Si
SLU 41	11.35	-1105	50.24	29988	45.96	0.915	No, M>Mu

Verifica a pressoflessione nel piano secondo D.M. 17-01-18 NTC §7.8.2.2.1 in combinazioni sismiche, γM = 2

Comb.	Quota	N	M	σ0	Mu	c.s.	Verifica
SLV 2	10.55	-1025	108.3	0	0	0	No, e>l/2
SLV 2	11.35	-14	-60.97	0	0	0	No, e>l/2
SLV 7	10.55	-1339	132.8	0	0	0	No, e>l/2
SLV 7	11.35	255	-152.9	0	0	0	No, Trazione
SLV 4	10.55	-1360	170.13	0	0	0	No, e>l/2
SLV 4	11.35	435	-146.53	0	0	0	No, Trazione
SLV 8	10.55	-1339	132.8	0	0	0	No, e>l/2
SLV 8	11.35	255	-152.9	0	0	0	No, Trazione
SLV 9	10.55	135	-167.17	0	0	0	No, Trazione
SLV 9	11.35	-1847	212.37	0	0	0	No, e>l/2
SLV 3	10.55	-1360	170.13	0	0	0	No, e>l/2
SLV 3	11.35	435	-146.53	0	0	0	No, Trazione
SLV 6	10.55	-220	-73.33	0	0	0	No, e>l/2
SLV 6	11.35	-1243	132.28	0	0	0	No, e>l/2
SLV 10	10.55	135	-167.17	0	0	0	No, Trazione
SLV 10	11.35	-1847	212.37	0	0	0	No, e>l/2
SLV 1	10.55	-1025	108.3	0	0	0	No, e>l/2
SLV 1	11.35	-14	-60.97	0	0	0	No, e>l/2
SLV 5	10.55	-220	-73.33	0	0	0	No, e>l/2
SLV 5	11.35	-1243	132.28	0	0	0	No, e>l/2

Verifica a taglio nel piano secondo D.M. 17-01-18 (N.T.C.) §7.8.2.2.2 con rottura per scorrimento in combinazioni non sismiche, γM = 3

Comb.	Quota	N	V par	M	σ0	σN	l'	fvd	Vt scorr.	Vt fess.diag.	Vt,lim	c.s.	Verifica
SLU 81	10.55	-828	-137	-34.1		40013	0.0739	10833	224			1.64	Si
SLU 81	11.35	-1212	-188	52.3		63663	0.068	10833	206			1.1	Si
SLU 84	10.55	-862	-144	-35.92		42498	0.0725	10833	220			1.52	Si
SLU 84	11.35	-1271	-194	54.23		65375	0.0694	10833	211			1.08	Si
SLU 41	10.55	-711	-137	-34.43		48734	0.0521	10833	158			1.15	Si
SLU 41	11.35	-1105	-181	50.24		64635	0.0611	10833	185			1.02	Si
SLU 83	10.55	-866	-143	-35.75		42028	0.0736	10833	223			1.56	Si
SLU 83	11.35	-1275	-196	54.52		65845	0.0691	10833	210			1.07	Si
SLU 40	10.55	-669	-132	-32.95		48067	0.0497	10833	151			1.15	Si
SLU 40	11.35	-1039	-172	47.74		62276	0.0596	10833	181			1.05	Si
SLU 35	10.55	-751	-133	-33.31		41679	0.0643	10833	195			1.47	Si
SLU 35	11.35	-1142	-179	49.86		61367	0.0665	10833	202			1.13	Si
SLU 82	10.55	-824	-138	-34.27		40477	0.0727	10833	221			1.6	Si
SLU 82	11.35	-1208	-187	52.01		63185	0.0683	10833	207			1.11	Si
SLU 39	10.55	-673	-131	-32.78		46858	0.0513	10833	156			1.19	Si
SLU 39	11.35	-1043	-174	48.03		62836	0.0593	10833	180			1.04	Si
SLU 42	10.55	-707	-138	-34.61		49896	0.0506	10833	154			1.11	Si

Comb.	Quota	N	V par	M	σ0	σN	l'	fvd	Vt scorr.	Vt fess.diag.	Vt,lim	c.s.	Verifica
SLU 42	11.35	-1101	-180	49.95		64094	0.0614	10833	186			1.04	Si
SLU 36	10.55	-747	-134	-33.48		42357	0.063	10833	191			1.43	Si
SLU 36	11.35	-1138	-177	49.57		60876	0.0668	10833	203			1.14	Si

Verifica a taglio nel piano secondo D.M. 17-01-18 (N.T.C.) §7.8.2.2.2 con rottura per scorrimento in combinazioni sismiche, γM = 2

Comb.	Quota	N	V par	M	σ0	σN	l'	fvd	Vt scorr.	Vt fess.diag.	Vt,lim	c.s.	Verifica
SLV 9	10.55	135	-661	-167.17		0	0	8333	0			0	No, Vu<V
SLV 9	11.35	-1847	-859	212.37		0	0	8333	0			0	No, Vu<V
SLV 5	10.55	-220	-308	-73.33		0	0	8333	0			0	No, Vu<V
SLV 5	11.35	-1243	-593	132.28		0	0	8333	0			0	No, Vu<V
SLV 10	10.55	135	-661	-167.17		0	0	8333	0			0	No, Vu<V
SLV 10	11.35	-1847	-859	212.37		0	0	8333	0			0	No, Vu<V
SLV 1	10.55	-1025	393	108.3		0	0	8333	0			0	No, Vu<V
SLV 1	11.35	-14	152	-60.97		0	0	8333	0			0	No, Vu<V
SLV 4	10.55	-1360	642	170.13		0	0	8333	0			0	No, Vu<V
SLV 4	11.35	435	524	-146.53		0	0	8333	0			0	No, Vu<V
SLV 7	10.55	-1339	520	132.8		0	0	8333	0			0	No, Vu<V
SLV 7	11.35	255	648	-152.9		0	0	8333	0			0	No, Vu<V
SLV 8	10.55	-1339	520	132.8		0	0	8333	0			0	No, Vu<V
SLV 8	11.35	255	648	-152.9		0	0	8333	0			0	No, Vu<V
SLV 6	10.55	-220	-308	-73.33		0	0	8333	0			0	No, Vu<V
SLV 6	11.35	-1243	-593	132.28		0	0	8333	0			0	No, Vu<V
SLV 3	10.55	-1360	642	170.13		0	0	8333	0			0	No, Vu<V
SLV 3	11.35	435	524	-146.53		0	0	8333	0			0	No, Vu<V
SLV 2	10.55	-1025	393	108.3		0	0	8333	0			0	No, Vu<V
SLV 2	11.35	-14	152	-60.97		0	0	8333	0			0	No, Vu<V

Verifica a pressoflessione fuori piano D.M. 17-01-18 (N.T.C.)

quota 10.3 Wa 0.05 denominatore 8 γM = 2

Comb.	fd	Sa	σ0	N	M	Mc	Coeff.s.	Verifica
SLV 10	143750	0.46	0	14	16.28	0	0	No, Trazione
SLV 5	143750	0.46	0	-98	16.28	0	0	No, e>t/2
SLV 9	143750	0.46	0	14	16.28	0	0	No, Trazione
SLV 13	143750	0.46	0	-71	16.28	0	0	No, e>t/2
SLV 14	143750	0.46	0	-71	16.28	0	0	No, e>t/2
SLV 6	143750	0.46	0	-98	16.28	0	0	No, e>t/2
SLV 16	143750	0.46	6931	-255	16.28	33.73	2.07	Si
SLV 15	143750	0.46	6931	-255	16.28	33.73	2.07	Si
SLV 1	143750	0.46	12026	-443	16.28	55.95	3.44	Si
SLV 2	143750	0.46	12026	-443	16.28	55.95	3.44	Si

Verifica dei meccanismi locali di collasso con analisi cinematica lineare

forza di aggancio al piano = 0 quota mezzeria = 10.3 Wa = 0.05 Ta = 0.0731

Comb.	N top	N base	V orto	α0	M*	e*	a0*	aLim	Verifica
SLV 6	63	-534	-16	0	0	0	0	9.02602	No, Trazione
SLV 5	63	-534	-16	0	0	0	0	9.02602	No, Trazione
SLV 1	85	-282	-9	0	0	0	0	10.21601	No, Trazione
SLV 2	85	-282	-9	0	0	0	0	10.21601	No, Trazione
SLV 10	-143	-728	-13	0.008	34	0.89	0.12265	9.02602	No
SLV 9	-143	-728	-13	0.008	34	0.89	0.12265	9.02602	No
SLV 12	-763	-657	14	0.029	96	0.946	0.44758	9.02602	No
SLV 11	-763	-657	14	0.029	96	0.946	0.44758	9.02602	No
SLV 7	-558	-463	12	0.03	75.2	0.933	0.4612	9.02602	No
SLV 8	-558	-463	12	0.03	75.2	0.933	0.4612	9.02602	No

Tabella dei coefficienti di sicurezza minimi

Stato limite	Coeff.s.	Comb.	Verifica
PF_SLU	0.886	SLU 83	No
V_SLU	1.023	SLU 41	Si
PF_SLV	0	SLV 14	No
V_SLV	0	SLV 1	No
PFFP_SLV	0	SLV 10	No
R_SLV	0	SLV 6	No

Maschio 207

Verifiche condotte secondo D.M. 17-01-18 (N.T.C.)

Dati geometrici

X ini.	Y ini.	X fin.	Y fin.	Quota i.	Quota.s	l	Sp.	h netta	h ini.	h fin.	a	a.s.,sx	a.s.,dx
-5.088	6.44	-5.088	6.5	L5	L6	0.06	0.28	3.5	3.5	3.5			

Caratteristiche del materiale

(Circolare 7 21-01-19 C8.5.I) Muratura in mattoni pieni e malta di calce LC2_Corti

fb	fk	fvk0	fmedio	τ0	fv0	μ	ϕ	fv,lim	E	G	FC
600000			345000	9000	20000	0.58	0.77	32500	320000000	128000000	1.2

Verifica a pressoflessione nel piano secondo D.M. 17-01-18 NTC §7.8.2.2.1 in combinazioni non sismiche, γM = 3

Comb.	Quota	N	M	σ0	Mu	c.s.	Verifica
SLU 81	10.55	-730	-10.52	43510	10.18	0.968	No, M>Mu
SLU 81	11.35	-588	9.36	35070	10.03	1.072	Si
SLU 84	10.55	-760	-11.07	45327	10.1	0.913	No, M>Mu
SLU 84	11.35	-613	9.82	36555	10.12	1.031	Si
SLU 82	10.55	-729	-10.52	43444	10.19	0.969	No, M>Mu
SLU 82	11.35	-587	9.36	35006	10.03	1.072	Si

Comb.	Quota	N	M	σ0	Mu	c.s.	Verifica
SLU 74	10.55	-753	-10.42	44905	10.12	0.971	No, M>Mu
SLU 74	11.35	-613	9.18	36556	10.12	1.103	Si
SLU 80	10.55	-764	-10.65	45573	10.09	0.948	No, M>Mu
SLU 80	11.35	-622	9.34	37091	10.15	1.086	Si
SLU 77	10.55	-785	-10.97	46788	10.01	0.912	No, M>Mu
SLU 77	11.35	-639	9.64	38105	10.19	1.057	Si
SLU 75	10.55	-752	-10.42	44839	10.13	0.972	No, M>Mu
SLU 75	11.35	-612	9.18	36491	10.12	1.103	Si
SLU 79	10.55	-766	-10.65	45639	10.08	0.947	No, M>Mu
SLU 79	11.35	-623	9.34	37155	10.15	1.087	Si
SLU 78	10.55	-784	-10.97	46722	10.01	0.913	No, M>Mu
SLU 78	11.35	-638	9.64	38041	10.19	1.057	Si
SLU 83	10.55	-761	-11.07	45394	10.1	0.912	No, M>Mu
SLU 83	11.35	-614	9.82	36619	10.13	1.031	Si

Verifica a pressoflessione nel piano secondo D.M. 17-01-18 NTC §7.8.2.2.1 in combinazioni sismiche, γM = 2

Comb.	Quota	N	M	σ0	Mu	c.s.	Verifica
SLV 9	10.55	-902	-29.68	0	0	0	No, e>l/2
SLV 9	11.35	-320	41.41	0	0	0	No, e>l/2
SLV 7	10.55	-85	17.99	0	0	0	No, e>l/2
SLV 7	11.35	-498	-31.36	0	0	0	No, e>l/2
SLV 1	10.55	-341	26.44	0	0	0	No, e>l/2
SLV 1	11.35	-497	-25.26	0	0	0	No, e>l/2
SLV 3	10.55	-141	34.23	0	0	0	No, e>l/2
SLV 3	11.35	-531	-40.29	0	0	0	No, e>l/2
SLV 6	10.55	-751	-7.97	44780	14.25	1.788	Si
SLV 6	11.35	-383	18.73	0	0	0	No, e>l/2
SLV 2	10.55	-341	26.44	0	0	0	No, e>l/2
SLV 2	11.35	-497	-25.26	0	0	0	No, e>l/2
SLV 8	10.55	-85	17.99	0	0	0	No, e>l/2
SLV 8	11.35	-498	-31.36	0	0	0	No, e>l/2
SLV 4	10.55	-141	34.23	0	0	0	No, e>l/2
SLV 4	11.35	-531	-40.29	0	0	0	No, e>l/2
SLV 5	10.55	-751	-7.97	44780	14.25	1.788	Si
SLV 5	11.35	-383	18.73	0	0	0	No, e>l/2
SLV 10	10.55	-902	-29.68	0	0	0	No, e>l/2
SLV 10	11.35	-320	41.41	0	0	0	No, e>l/2

Verifica a taglio nel piano secondo D.M. 17-01-18 (N.T.C.) §7.8.2.2.2 con rottura per scorrimento in combinazioni non sismiche, γM = 3

Comb.	Quota	N	V par	M	σ0	σN	l'	fvd	Vt scorr.	Vt fess.diag.	Vt,lim	c.s.	Verifica
SLU 84	10.55	-760	-43	-11.07		58777	0.0462	10833	140			3.26	Si
SLU 84	11.35	-613	-42	9.82		52371	0.0418	10833	127			3.03	Si
SLU 41	10.55	-649	-40	-10.32		55004	0.0422	10833	128			3.17	Si
SLU 41	11.35	-517	-39	9.26		51172	0.0361	10833	109			2.79	Si
SLU 36	10.55	-672	-40	-10.22		54243	0.0442	10833	134			3.37	Si
SLU 36	11.35	-540	-39	9.09		48957	0.0394	10833	120			3.1	Si
SLU 81	10.55	-730	-41	-10.52		55932	0.0466	10833	141			3.46	Si
SLU 81	11.35	-588	-40	9.36		49869	0.0421	10833	128			3.21	Si
SLU 83	10.55	-761	-43	-11.07		58816	0.0462	10833	140			3.26	Si
SLU 83	11.35	-614	-42	9.82		52357	0.0419	10833	127			3.04	Si
SLU 35	10.55	-673	-40	-10.22		54279	0.0443	10833	134			3.37	Si
SLU 35	11.35	-541	-39	9.09		48930	0.0395	10833	120			3.11	Si
SLU 40	10.55	-617	-38	-9.77		52019	0.0423	10833	128			3.37	Si
SLU 40	11.35	-489	-37	8.8		48698	0.0359	10833	109			2.92	Si
SLU 82	10.55	-729	-41	-10.52		55891	0.0466	10833	141			3.45	Si
SLU 82	11.35	-587	-40	9.36		49881	0.042	10833	128			3.2	Si
SLU 42	10.55	-648	-40	-10.32		54974	0.0421	10833	128			3.17	Si
SLU 42	11.35	-515	-39	9.27		51225	0.0359	10833	109			2.78	Si
SLU 39	10.55	-618	-38	-9.78		52049	0.0424	10833	129			3.37	Si
SLU 39	11.35	-491	-37	8.8		48644	0.036	10833	109			2.93	Si

Verifica a taglio nel piano secondo D.M. 17-01-18 (N.T.C.) §7.8.2.2.2 con rottura per scorrimento in combinazioni sismiche, γM = 2

Comb.	Quota	N	V par	M	σ0	σN	l'	fvd	Vt scorr.	Vt fess.diag.	Vt,lim	c.s.	Verifica
SLV 5	10.55	-751	-29	-7.97		46228	0.058	16250	264			9.2	Si
SLV 5	11.35	-383	-22	18.73		0	0	8333	0			0	No, Vu<V
SLV 8	10.55	-85	67	17.99		0	0	8333	0			0	No, Vu<V
SLV 8	11.35	-498	50	-31.36		0	0	8333	0			0	No, Vu<V
SLV 9	10.55	-902	-112	-29.68		0	0	8333	0			0	No, Vu<V
SLV 9	11.35	-320	-94	41.41		0	0	8333	0			0	No, Vu<V
SLV 1	10.55	-341	102	26.44		0	0	8333	0			0	No, Vu<V
SLV 1	11.35	-497	88	-25.26		0	0	8333	0			0	No, Vu<V
SLV 10	10.55	-902	-112	-29.68		0	0	8333	0			0	No, Vu<V
SLV 10	11.35	-320	-94	41.41		0	0	8333	0			0	No, Vu<V
SLV 7	10.55	-85	67	17.99		0	0	8333	0			0	No, Vu<V
SLV 7	11.35	-498	50	-31.36		0	0	8333	0			0	No, Vu<V
SLV 6	10.55	-751	-29	-7.97		46228	0.058	16250	264			9.2	Si
SLV 6	11.35	-383	-22	18.73		0	0	8333	0			0	No, Vu<V
SLV 2	10.55	-341	102	26.44		0	0	8333	0			0	No, Vu<V
SLV 2	11.35	-497	88	-25.26		0	0	8333	0			0	No, Vu<V
SLV 4	10.55	-141	131	34.23		0	0	8333	0			0	No, Vu<V
SLV 4	11.35	-531	109	-40.29		0	0	8333	0			0	No, Vu<V
SLV 3	10.55	-141	131	34.23		0	0	8333	0			0	No, Vu<V
SLV 3	11.35	-531	109	-40.29		0	0	8333	0			0	No, Vu<V

Verifica a pressoflessione fuori piano D.M. 17-01-18 (N.T.C.)

quota 10.3 Wa 0.05 denominatore 8 γM = 2

Comb.	fd	Sa	σ0	N	M	Mc	Coeff.s.	Verifica
SLV 2	143750	0.46	0	-41	7.41	0	0	No, e>t/2
SLV 4	143750	0.46	0	-23	7.41	0	0	No, e>t/2

Comb.	fd	Sa	σ0	N	M	Mc	Coeff.s.	Verifica
SLV 7	143750	0.46	0	-31	7.41	0	0	No, e>t/2
SLV 3	143750	0.46	0	-23	7.41	0	0	No, e>t/2
SLV 8	143750	0.46	0	-31	7.41	0	0	No, e>t/2
SLV 1	143750	0.46	0	-41	7.41	0	0	No, e>t/2
SLV 12	143750	0.46	3312	-56	7.41	7.57	1.02	Si
SLV 11	143750	0.46	3312	-56	7.41	7.57	1.02	Si
SLV 6	143750	0.46	5360	-90	7.41	12.03	1.62	Si
SLV 5	143750	0.46	5360	-90	7.41	12.03	1.62	Si

Verifica dei meccanismi locali di collasso con analisi cinematica lineare

forza di aggancio al piano = 0 quota mezzeria = 10.3 Wa = 0.05 Ta = 0.0731

Comb.	N top	N base	V orto	α0	M*	e*	a0*	aLim	Verifica
SLV 7	52	-235	-3	0	0	0	0	9.02602	No, Trazione
SLV 12	69	-244	-3	0	0	0	0	9.02602	No, Trazione
SLV 11	69	-244	-3	0	0	0	0	9.02602	No, Trazione
SLV 8	52	-235	-3	0	0	0	0	9.02602	No, Trazione
SLV 6	-264	-195	3	0.036	35.3	0.935	0.56442	9.02602	No
SLV 5	-264	-195	3	0.036	35.3	0.935	0.56442	9.02602	No
SLV 10	-247	-204	3	0.037	33.5	0.932	0.58298	9.02602	No
SLV 9	-247	-204	3	0.037	33.5	0.932	0.58298	9.02602	No
SLV 1	-174	-199	2	0.043	26.1	0.918	0.67414	10.21601	No
SLV 2	-174	-199	2	0.043	26.1	0.918	0.67414	10.21601	No

Tabella dei coefficienti di sicurezza minimi

Stato limite	Coeff.s.	Comb.	Verifica
PF_SLU	0.912	SLU 77	No
V_SLU	2.777	SLU 42	Si
PF_SLV	0	SLV 1	No
V_SLV	0	SLV 1	No
PFFP_SLV	0	SLV 1	No
R_SLV	0	SLV 12	No

Maschio 208

Verifiche condotte secondo D.M. 17-01-18 (N.T.C.)

Dati geometrici

X ini.	Y ini.	X fin.	Y fin.	Quota i.	Quota.s	l	Sp.	h netta	h ini.	h fin.	a	a.s.,sx	a.s.,dx
-5.937	-3.169	-6.467	-3.169	L5	L6	0.53	0.28	3.5	3.5	3.5			

Caratteristiche del materiale

(Circolare 7 21-01-19 C8.5.I) Muratura in mattoni pieni e malta di calce LC2_Corti

fb	fk	fvk0	fmedio	τ0	fv0	μ	ϕ	fv,lim	E	G	FC
600000			345000	9000	20000	0.58	0.77	32500	320000000	128000000	1.2

Verifica a pressoflessione nel piano secondo D.M. 17-01-18 NTC §7.8.2.2.1 in combinazioni non sismiche, γM = 3

Comb.	Quota	N	M	σ0	Mu	c.s.	Verifica
SLU 52	10.55	-2644	-19.14	17811	547.63	28.609	Si
SLU 52	11.35	-2542	-110.86	17127	532.24	4.801	Si
SLU 10	10.55	-2143	-16.54	14435	467.35	28.253	Si
SLU 10	11.35	-2071	-89.54	13952	454.97	5.081	Si
SLU 2	10.55	-1851	-16.75	12470	415.56	24.806	Si
SLU 2	11.35	-1719	-84.02	11579	390.87	4.652	Si
SLU 44	10.55	-2352	-19.35	15846	502.25	25.953	Si
SLU 44	11.35	-2190	-105.34	14754	475.42	4.513	Si
SLU 43	10.55	-2472	-12.36	16651	521.29	42.191	Si
SLU 43	11.35	-2388	-100.56	16085	507.96	5.051	Si
SLU 73	10.55	-2906	-20.09	19578	585.23	29.124	Si
SLU 73	11.35	-2845	-118.01	19163	576.66	4.887	Si
SLU 65	10.55	-2615	-20.3	17613	543.21	26.753	Si
SLU 65	11.35	-2492	-112.49	16790	524.51	4.663	Si
SLU 82	10.55	-3079	-17.21	20742	608.37	35.359	Si
SLU 82	11.35	-3075	-118.46	20712	607.78	5.131	Si
SLU 61	10.55	-2817	-16.25	18976	572.75	35.239	Si
SLU 61	11.35	-2772	-111.31	18676	566.41	5.088	Si
SLU 23	10.55	-2113	-17.7	14236	462.28	26.111	Si
SLU 23	11.35	-2021	-91.17	13615	446.2	4.894	Si

Verifica a pressoflessione nel piano secondo D.M. 17-01-18 NTC §7.8.2.2.1 in combinazioni sismiche, γM = 2

Comb.	Quota	N	M	σ0	Mu	c.s.	Verifica
SLV 2	10.55	-333	451.09	0	0	0	No, e>l/2
SLV 2	11.35	-168	-890.27	0	0	0	No, e>l/2
SLV 13	10.55	-4108	-546.31	27675	842.36	1.542	Si
SLV 13	11.35	-3625	673.72	24417	768.81	1.141	Si
SLV 14	10.55	-4108	-546.31	27675	842.36	1.542	Si
SLV 14	11.35	-3625	673.72	24417	768.81	1.141	Si
SLV 6	10.55	-1869	14.16	12591	444.41	31.375	Si
SLV 6	11.35	-894	-402.19	0	0	0	No, e>l/2
SLV 5	10.55	-1869	14.16	12591	444.41	31.375	Si
SLV 5	11.35	-894	-402.19	0	0	0	No, e>l/2
SLV 16	10.55	-3924	-471.02	26436	815.19	1.731	Si
SLV 16	11.35	-4039	724.56	27208	832.24	1.149	Si
SLV 1	10.55	-333	451.09	0	0	0	No, e>l/2
SLV 1	11.35	-168	-890.27	0	0	0	No, e>l/2
SLV 4	10.55	-149	526.37	0	0	0	No, e>l/2
SLV 4	11.35	-582	-839.43	0	0	0	No, e>l/2

Comb.	Quota	N	M	σ0	Mu	c.s.	Verifica
SLV 3	10.55	-149	526.37	0	0	0	No, e>l/2
SLV 3	11.35	-582	-839.43	0	0	0	No, e>l/2
SLV 15	10.55	-3924	-471.02	26436	815.19	1.731	Si
SLV 15	11.35	-4039	724.56	27208	832.24	1.149	Si

Verifica a taglio nel piano secondo D.M. 17-01-18 (N.T.C.) §7.8.2.2.2 con rottura per scorrimento in combinazioni non sismiche, γM = 3

Comb.	Quota	N	V par	M	σ0	σN	l'	fvd	Vt scorr.	Vt fess.diag.	Vt,lim	c.s.	Verifica
SLU 82	10.55	-3079	150	-17.21		20742	0.5302	8321	1235			8.22	Si
SLU 82	11.35	-3075	149	-118.46		20712	0.5302	8317	1235			8.31	Si
SLU 60	10.55	-2889	144	-12.05		19459	0.5302	8150	1210			8.41	Si
SLU 60	11.35	-2891	144	-108.44		19474	0.5302	8152	1210			8.41	Si
SLU 65	10.55	-2615	130	-20.3		17613	0.5302	7904	1173			9.02	Si
SLU 65	11.35	-2492	127	-112.49		16790	0.5302	7794	1157			9.11	Si
SLU 73	10.55	-2906	142	-20.09		19578	0.5302	8166	1212			8.53	Si
SLU 73	11.35	-2845	139	-118.01		19163	0.5302	8111	1204			8.66	Si
SLU 81	10.55	-3151	155	-13.01		21225	0.5302	8386	1245			8.04	Si
SLU 81	11.35	-3193	155	-115.6		21510	0.5302	8424	1250			8.07	Si
SLU 39	10.55	-2650	129	-10.41		17848	0.5302	7935	1178			9.16	Si
SLU 39	11.35	-2722	129	-94.28		18335	0.5302	8000	1188			9.23	Si
SLU 43	10.55	-2472	127	-12.36		16651	0.5302	7776	1154			9.12	Si
SLU 43	11.35	-2388	127	-100.56		16085	0.5302	7700	1143			9.03	Si
SLU 61	10.55	-2817	139	-16.25		18976	0.5302	8086	1200			8.62	Si
SLU 61	11.35	-2772	137	-111.31		18676	0.5302	8046	1194			8.69	Si
SLU 52	10.55	-2644	131	-19.14		17811	0.5302	7930	1177			8.98	Si
SLU 52	11.35	-2542	128	-110.86		17127	0.5302	7839	1164			9.09	Si
SLU 64	10.55	-2734	138	-13.31		18418	0.5302	8011	1189			8.64	Si
SLU 64	11.35	-2690	138	-107.71		18120	0.5302	7972	1183			8.6	Si

Verifica a taglio nel piano secondo D.M. 17-01-18 (N.T.C.) §7.8.2.2.2 con rottura per scorrimento in combinazioni sismiche, γM = 2

Comb.	Quota	N	V par	M	σ0	σN	l'	fvd	Vt scorr.	Vt fess.diag.	Vt,lim	c.s.	Verifica
SLV 1	10.55	-333	1818	451.09		0	0	8333	0			0	No, Vu<V
SLV 1	11.35	-168	1774	-890.27		0	0	8333	0			0	No, Vu<V
SLV 14	10.55	-4108	-1438	-546.31		37023	0.3963	15738	1746			1.21	Si
SLV 14	11.35	-3625	-1512	673.72		54478	0.2376	16250	1081			0.71	No, Vu<V
SLV 3	10.55	-149	1652	526.37		0	0	8333	0			0	No, Vu<V
SLV 3	11.35	-582	1726	-839.43		0	0	8333	0			0	No, Vu<V
SLV 13	10.55	-4108	-1438	-546.31		37023	0.3963	15738	1746			1.21	Si
SLV 13	11.35	-3625	-1512	673.72		54478	0.2376	16250	1081			0.71	No, Vu<V
SLV 15	10.55	-3924	-1604	-471.02		32207	0.4352	14775	1800			1.12	Si
SLV 15	11.35	-4039	-1560	724.56		56114	0.2571	16250	1170			0.75	No, Vu<V
SLV 5	10.55	-1869	872	14.16		12591	0.5302	10852	1611			1.85	Si
SLV 5	11.35	-894	680	-402.19		0	0	8333	0			0	No, Vu<V
SLV 16	10.55	-3924	-1604	-471.02		32207	0.4352	14775	1800			1.12	Si
SLV 16	11.35	-4039	-1560	724.56		56114	0.2571	16250	1170			0.75	No, Vu<V
SLV 2	10.55	-333	1818	451.09		0	0	8333	0			0	No, Vu<V
SLV 2	11.35	-168	1774	-890.27		0	0	8333	0			0	No, Vu<V
SLV 4	10.55	-149	1652	526.37		0	0	8333	0			0	No, Vu<V
SLV 4	11.35	-582	1726	-839.43		0	0	8333	0			0	No, Vu<V
SLV 6	10.55	-1869	872	14.16		12591	0.5302	10852	1611			1.85	Si
SLV 6	11.35	-894	680	-402.19		0	0	8333	0			0	No, Vu<V

Verifica a pressoflessione fuori piano D.M. 17-01-18 (N.T.C.)

quota 10.3 Wa 0.05 denominatore 8 γM = 2

Comb.	fd	Sa	σ0	N	M	Mc	Coeff.s.	Verifica
SLV 3	143750	0.46	4814	-715	64.06	96.1	1.5	Si
SLV 4	143750	0.46	4814	-715	64.06	96.1	1.5	Si
SLV 7	143750	0.46	5756	-854	64.06	113.98	1.78	Si
SLV 8	143750	0.46	5756	-854	64.06	113.98	1.78	Si
SLV 2	143750	0.46	7291	-1082	64.06	142.49	2.22	Si
SLV 1	143750	0.46	7291	-1082	64.06	142.49	2.22	Si
SLV 12	143750	0.46	9041	-1342	64.06	173.98	2.72	Si
SLV 11	143750	0.46	9041	-1342	64.06	173.98	2.72	Si
SLV 6	143750	0.46	14014	-2080	64.06	257.84	4.02	Si
SLV 5	143750	0.46	14014	-2080	64.06	257.84	4.02	Si

Verifica dei meccanismi locali di collasso con analisi cinematica lineare

forza di aggancio al piano = 0 quota mezzeria = 10.3 Wa = 0.05 Ta = 0.0731

Comb.	N top	N base	V orto	α0	M*	e*	a0*	aLim	Verifica
SLV 16	-1811	-1548	-3	0.047	258.8	0.925	0.73891	10.21601	No
SLV 15	-1811	-1548	-3	0.047	258.8	0.925	0.73891	10.21601	No
SLV 14	-1534	-1720	2	0.048	231	0.918	0.76464	10.21601	No
SLV 13	-1534	-1720	2	0.048	231	0.918	0.76464	10.21601	No
SLV 11	-1615	-1311	-9	0.045	239.1	0.92	0.70586	9.02602	No
SLV 12	-1615	-1311	-9	0.045	239.1	0.92	0.70586	9.02602	No
SLV 7	-1169	-1280	-9	0.046	194.6	0.907	0.73117	9.02602	No
SLV 8	-1169	-1280	-9	0.046	194.6	0.907	0.73117	9.02602	No
SLV 9	-690	-1885	7	0.05	147.9	0.893	0.8132	9.02602	No
SLV 10	-690	-1885	7	0.05	147.9	0.893	0.8132	9.02602	No

Tabella dei coefficienti di sicurezza minimi

Stato limite	Coeff.s.	Comb.	Verifica
PF_SLU	4.513	SLU 44	Si
V_SLU	8.035	SLU 81	Si
PF_SLV	0	SLV 1	No
V_SLV	0	SLV 1	No
PFFP_SLV	1.5	SLV 3	Si
R_SLV	0.072	SLV 15	No

Maschio 209

Verifiche condotte secondo D.M. 17-01-18 (N.T.C.)

Dati geometrici

X ini.	Y ini.	X fin.	Y fin.	Quota i.	Quota.s	l	Sp.	h netta	h ini.	h fin.	a	a.s.,sx	a.s.,dx
-2.952	-3.169	-5.437	-3.169	L5	L6	2.485	0.28	3.5	3.5	3.5			

Caratteristiche del materiale

(Circolare 7 21-01-19 C8.5.I) Muratura in mattoni pieni e malta di calce LC2_Corti

fb	fk	fvk0	fmedio	τ0	fv0	μ	ϕ	fv,lim	E	G	FC
600000			345000	9000	20000	0.58	0.77	32500	320000000	128000000	1.2

Verifica a pressoflessione nel piano secondo D.M. 17-01-18 NTC §7.8.2.2.1 in combinazioni non sismiche, γM = 3

Comb.	Quota	N	M	σ0	Mu	c.s.	Verifica
SLU 64	10.55	-11056	707.19	15890	11057.49	15.636	Si
SLU 64	11.35	-9777	220.91	14051	10052.11	45.502	Si
SLU 81	10.55	-12599	828.51	18107	12174.42	14.694	Si
SLU 81	11.35	-11319	284.35	16268	11255.58	39.584	Si
SLU 39	10.55	-10565	695	15184	10680.22	15.367	Si
SLU 39	11.35	-9573	252.8	13758	9885.36	39.103	Si
SLU 74	10.55	-12621	766.2	18139	12189.98	15.91	Si
SLU 74	11.35	-11342	267.23	16301	11272.41	42.183	Si
SLU 83	10.55	-12647	766.45	18177	12207.75	15.928	Si
SLU 83	11.35	-11368	263.13	16338	11291.62	42.912	Si
SLU 53	10.55	-11575	706.15	16635	11444.59	16.207	Si
SLU 53	11.35	-10312	227.93	14820	10481.27	45.985	Si
SLU 18	10.55	-9518	634.96	13680	9840.45	15.498	Si
SLU 18	11.35	-8542	213.5	12277	9014.3	42.221	Si
SLU 43	10.55	-10009	647.15	14385	10240.25	15.824	Si
SLU 43	11.35	-8746	181.61	12570	9190.25	50.604	Si
SLU 60	10.55	-11552	768.46	16603	11427.99	14.871	Si
SLU 60	11.35	-10289	245.05	14787	10463.42	42.7	Si
SLU 62	10.55	-11600	706.4	16672	11463.54	16.228	Si
SLU 62	11.35	-10337	223.83	14857	10501.64	46.918	Si

Verifica a pressoflessione nel piano secondo D.M. 17-01-18 NTC §7.8.2.2.1 in combinazioni sismiche, γM = 2

Comb.	Quota	N	M	σ0	Mu	c.s.	Verifica
SLV 1	10.55	-10487	1266.53	15071	11422.38	9.019	Si
SLV 1	11.35	-9492	-4357.26	13642	10477.03	2.405	Si
SLV 2	10.55	-10487	1266.53	15071	11422.38	9.019	Si
SLV 2	11.35	-9492	-4357.26	13642	10477.03	2.405	Si
SLV 4	10.55	-8660	1416.65	12446	9663.64	6.821	Si
SLV 4	11.35	-7689	-4225.38	11051	8689.73	2.057	Si
SLV 3	10.55	-8660	1416.65	12446	9663.64	6.821	Si
SLV 3	11.35	-7689	-4225.38	11051	8689.73	2.057	Si
SLV 11	10.55	-5241	569.31	7533	6110.86	10.734	Si
SLV 11	11.35	-4302	1733.37	6182	5074.25	2.927	Si
SLV 14	10.55	-8507	-306.53	12226	9512	31.031	Si
SLV 14	11.35	-7516	4573.35	10802	8513.05	1.861	Si
SLV 12	10.55	-5241	569.31	7533	6110.86	10.734	Si
SLV 12	11.35	-4302	1733.37	6182	5074.25	2.927	Si
SLV 13	10.55	-8507	-306.53	12226	9512	31.031	Si
SLV 13	11.35	-7516	4573.35	10802	8513.05	1.861	Si
SLV 16	10.55	-6680	-156.41	9600	7647.53	48.895	Si
SLV 16	11.35	-5713	4705.22	8211	6621.63	1.407	Si
SLV 15	10.55	-6680	-156.41	9600	7647.53	48.895	Si
SLV 15	11.35	-5713	4705.22	8211	6621.63	1.407	Si

Verifica a taglio nel piano secondo D.M. 17-01-18 (N.T.C.) §7.8.2.2.2 con rottura per scorrimento in combinazioni non sismiche, γM = 3

Comb.	Quota	N	V par	M	σ0	σN	l'	fvd	Vt scorr.	Vt fess.diag.	Vt,lim	c.s.	Verifica
SLU 61	10.55	-11664	595	664.58		16764	2.485	7791	5421			9.11	Si
SLU 61	11.35	-10401	595	179.67		14949	2.485	7549	5252			8.83	Si
SLU 83	10.55	-12647	620	766.45		18177	2.485	7979	5552			8.95	Si
SLU 83	11.35	-11368	620	263.13		16338	2.485	7734	5381			8.68	Si
SLU 43	10.55	-10009	571	647.15		14385	2.485	7474	5200			9.11	Si
SLU 43	11.35	-8746	571	181.61		12570	2.485	7232	5032			8.82	Si
SLU 62	10.55	-11600	592	706.4		16672	2.485	7779	5412			9.14	Si
SLU 62	11.35	-10337	592	223.83		14857	2.485	7536	5244			8.86	Si
SLU 74	10.55	-12621	615	766.2		18139	2.485	7974	5548			9.03	Si
SLU 74	11.35	-11342	615	267.23		16301	2.485	7729	5378			8.75	Si
SLU 60	10.55	-11552	643	768.46		16603	2.485	7769	5406			8.41	Si
SLU 60	11.35	-10289	643	245.05		14787	2.485	7527	5237			8.14	Si
SLU 81	10.55	-12599	671	828.51		18107	2.485	7970	5545			8.26	Si
SLU 81	11.35	-11319	671	284.35		16268	2.485	7725	5375			8.01	Si
SLU 53	10.55	-11575	587	706.15		16635	2.485	7774	5409			9.22	Si
SLU 53	11.35	-10312	587	227.93		14820	2.485	7532	5240			8.93	Si
SLU 82	10.55	-12711	623	724.62		18268	2.485	7991	5560			8.93	Si
SLU 82	11.35	-11432	623	218.97		16430	2.485	7746	5390			8.65	Si
SLU 64	10.55	-11056	599	707.19		15890	2.485	7674	5340			8.92	Si
SLU 64	11.35	-9777	599	220.91		14051	2.485	7429	5169			8.63	Si

Verifica a taglio nel piano secondo D.M. 17-01-18 (N.T.C.) §7.8.2.2.2 con rottura per scorrimento in combinazioni sismiche, γM = 2

Comb.	Quota	N	V par	M	σ0	σN	l'	fvd	Vt scorr.	Vt fess.diag.	Vt,lim	c.s.	Verifica
SLV 14	10.55	-8507	-5983	-306.53		12226	2.485	10778	7500			1.25	Si
SLV 14	11.35	-7516	-5573	4573.35		14113	1.9021	11156	5941			1.07	Si
SLV 3	10.55	-8660	6921	1416.65		12446	2.485	10822	7530			1.09	Si
SLV 3	11.35	-7689	6511	-4225.38		13209	2.0789	10975	6389			0.98	No, Vu<V
SLV 2	10.55	-10487	7400	1266.53		15071	2.485	11348	7896			1.07	Si

Comb.	Quota	N	V par	M	σ0	σN	l'	fvd	Vt scorr.	Vt fess.diag.	Vt,lim	c.s.	Verifica
SLV 2	11.35	-9492	7085	-4357.26		14423	2.3504	11218	7383			1.04	Si
SLV 13	10.55	-8507	-5983	-306.53		12226	2.485	10778	7500			1.25	Si
SLV 13	11.35	-7516	-5573	4573.35		14113	1.9021	11156	5941			1.07	Si
SLV 5	10.55	-11925	3275	540.81		17139	2.485	11761	8183			2.5	Si
SLV 5	11.35	-10904	3326	-1385.4		15671	2.485	11467	7979			2.4	Si
SLV 16	10.55	-6680	-6462	-156.41		9600	2.485	10253	7134			1.1	Si
SLV 16	11.35	-5713	-6148	4705.22		16235	1.2568	11580	4075			0.66	No, Vu<V
SLV 15	10.55	-6680	-6462	-156.41		9600	2.485	10253	7134			1.1	Si
SLV 15	11.35	-5713	-6148	4705.22		16235	1.2568	11580	4075			0.66	No, Vu<V
SLV 4	10.55	-8660	6921	1416.65		12446	2.485	10822	7530			1.09	Si
SLV 4	11.35	-7689	6511	-4225.38		13209	2.0789	10975	6389			0.98	No, Vu<V
SLV 1	10.55	-10487	7400	1266.53		15071	2.485	11348	7896			1.07	Si
SLV 1	11.35	-9492	7085	-4357.26		14423	2.3504	11218	7383			1.04	Si
SLV 6	10.55	-11925	3275	540.81		17139	2.485	11761	8183			2.5	Si
SLV 6	11.35	-10904	3326	-1385.4		15671	2.485	11467	7979			2.4	Si

Verifica a pressoflessione fuori piano D.M. 17-01-18 (N.T.C.)

quota 10.3 Wa 0.05 denominatore 8 γM = 2

Comb.	fd	Sa	σ0	N	M	Mc	Coeff.s.	Verifica
SLV 8	143750	0.46	7736	-5383	300.28	705.84	2.35	Si
SLV 7	143750	0.46	7736	-5383	300.28	705.84	2.35	Si
SLV 12	143750	0.46	7777	-5411	300.28	709.35	2.36	Si
SLV 11	143750	0.46	7777	-5411	300.28	709.35	2.36	Si
SLV 3	143750	0.46	10645	-7407	300.28	946.63	3.15	Si
SLV 4	143750	0.46	10645	-7407	300.28	946.63	3.15	Si
SLV 16	143750	0.46	10783	-7503	300.28	957.68	3.19	Si
SLV 15	143750	0.46	10783	-7503	300.28	957.68	3.19	Si
SLV 2	143750	0.46	13180	-9171	300.28	1145.43	3.81	Si
SLV 1	143750	0.46	13180	-9171	300.28	1145.43	3.81	Si

Verifica dei meccanismi locali di collasso con analisi cinematica lineare

forza di aggancio al piano = 0 quota mezzeria = 10.3 Wa = 0.05 Ta = 0.0731

Comb.	N top	N base	V orto	α0	M*	e*	a0*	aLim	Verifica
SLV 10	-7419	-11923	75	0.041	1105.7	0.919	0.65263	9.02602	No
SLV 9	-7419	-11923	75	0.041	1105.7	0.919	0.65263	9.02602	No
SLV 6	-7687	-11249	72	0.042	1132.7	0.921	0.65586	9.02602	No
SLV 5	-7687	-11249	72	0.042	1132.7	0.921	0.65586	9.02602	No
SLV 13	-5850	-10306	27	0.048	949	0.91	0.75982	10.21601	No
SLV 14	-5850	-10306	27	0.048	949	0.91	0.75982	10.21601	No
SLV 1	-6744	-8059	17	0.048	1038.2	0.915	0.76104	10.21601	No
SLV 2	-6744	-8059	17	0.048	1038.2	0.915	0.76104	10.21601	No
SLV 4	-5668	-5999	-28	0.048	931	0.909	0.76152	10.21601	No
SLV 3	-5668	-5999	-28	0.048	931	0.909	0.76152	10.21601	No

Tabella dei coefficienti di sicurezza minimi

Stato limite	Coeff.s.	Comb.	Verifica
PF_SLU	14.694	SLU 81	Si
V_SLU	8.009	SLU 81	Si
PF_SLV	1.407	SLV 15	Si
V_SLV	0.663	SLV 15	No
PFFP_SLV	2.351	SLV 7	Si
R_SLV	0.072	SLV 9	No

Maschio 210

Verifiche condotte secondo D.M. 17-01-18 (N.T.C.)

Dati geometrici

X ini.	Y ini.	X fin.	Y fin.	Quota i.	Quota.s	l	Sp.	h netta	h ini.	h fin.	a	a.s.,sx	a.s.,dx
-0.117	-3.169	-1.952	-3.169	L5	L6	1.835	0.28	3.5	3.5	3.5			

Caratteristiche del materiale

(Circolare 7 21-01-19 C8.5.I) Muratura in mattoni pieni e malta di calce LC2_Corti

fb	fk	fvk0	fmedio	τ0	fv0	μ	ϕ	fv,lim	E	G	FC
600000			345000	9000	20000	0.58	0.77	32500	320000000	128000000	1.2

Verifica a pressoflessione nel piano secondo D.M. 17-01-18 NTC §7.8.2.2.1 in combinazioni non sismiche, γM = 3

Comb.	Quota	N	M	σ0	Mu	c.s.	Verifica
SLU 73	9.45	-11542	-740.81	22465	7669.61	10.353	Si
SLU 73	11.35	-10998	974.89	21406	7439.19	7.631	Si
SLU 40	9.45	-9748	-749.33	18973	6860.94	9.156	Si
SLU 40	11.35	-9730	918.03	18938	6852	7.464	Si
SLU 61	9.45	-10940	-681.85	21292	7413.61	10.873	Si
SLU 61	11.35	-10297	901.07	20041	7123.16	7.905	Si
SLU 75	9.45	-11981	-769.75	23318	7845.66	10.192	Si
SLU 75	11.35	-11565	961.83	22508	7678.68	7.983	Si
SLU 39	9.45	-9634	-767.53	18750	6804.38	8.865	Si
SLU 39	11.35	-9669	897.69	18819	6822.03	7.6	Si
SLU 19	9.45	-8906	-609.77	17335	6432.75	10.55	Si
SLU 19	11.35	-8597	786.91	16732	6267.6	7.965	Si
SLU 31	9.45	-9509	-668.73	18508	6742.48	10.083	Si
SLU 31	11.35	-9298	860.73	18097	6635.89	7.71	Si
SLU 81	9.45	-11667	-839.62	22707	7720.42	9.195	Si
SLU 81	11.35	-11369	1011.85	22128	7597.68	7.509	Si
SLU 82	9.45	-11782	-821.41	22930	7766.74	9.455	Si
SLU 82	11.35	-11430	1032.19	22246	7623.11	7.385	Si

Comb.	Quota	N	M	σ0	Mu	c.s.	Verifica
SLU 84	9.45	-12093	-837.74	23536	7889.45	9.418	Si
SLU 84	11.35	-11804	989.52	22973	7775.6	7.858	Si

Verifica a pressoflessione nel piano secondo D.M. 17-01-18 NTC §7.8.2.2.1 in combinazioni sismiche, γM = 2

Comb.	Quota	N	M	σ0	Mu	c.s.	Verifica
SLV 3	9.45	-6517	1600.5	12684	5358.76	3.348	Si
SLV 3	11.35	-4176	-1247.9	8128	3576.74	2.866	Si
SLV 4	9.45	-6517	1600.5	12684	5358.76	3.348	Si
SLV 4	11.35	-4176	-1247.9	8128	3576.74	2.866	Si
SLV 14	9.45	-9864	-2571.08	19198	7628.05	2.967	Si
SLV 14	11.35	-11024	2478.06	21456	8338.39	3.365	Si
SLV 15	9.45	-7521	-2841.52	14639	6074.08	2.138	Si
SLV 15	11.35	-10137	3024.49	19730	7798.94	2.579	Si
SLV 11	9.45	-4437	-1602.33	8636	3783.35	2.361	Si
SLV 11	11.35	-7016	2166.65	13655	5717.79	2.639	Si
SLV 1	9.45	-8859	1870.94	17243	6981.48	3.732	Si
SLV 1	11.35	-5063	-1794.33	9854	4270.71	2.38	Si
SLV 12	9.45	-4437	-1602.33	8636	3783.35	2.361	Si
SLV 12	11.35	-7016	2166.65	13655	5717.79	2.639	Si
SLV 13	9.45	-9864	-2571.08	19198	7628.05	2.967	Si
SLV 13	11.35	-11024	2478.06	21456	8338.39	3.365	Si
SLV 2	9.45	-8859	1870.94	17243	6981.48	3.732	Si
SLV 2	11.35	-5063	-1794.33	9854	4270.71	2.38	Si
SLV 16	9.45	-7521	-2841.52	14639	6074.08	2.138	Si
SLV 16	11.35	-10137	3024.49	19730	7798.94	2.579	Si

Verifica a taglio nel piano secondo D.M. 17-01-18 (N.T.C.) §7.8.2.2.2 con rottura per scorrimento in combinazioni non sismiche, γM = 3

Comb.	Quota	N	V par	M	σ0	σN	l'	fvd	Vt scorr.	Vt fess.diag.	Vt,lim	c.s.	Verifica
SLU 41	9.45	-9945	-1799	-783.86		19356	1.835	8136	4180			2.32	Si
SLU 41	11.35	-10043	-1799	855.02		19546	1.835	8162	4194			2.33	Si
SLU 42	9.45	-10060	-1791	-765.65		19579	1.835	8166	4196			2.34	Si
SLU 42	11.35	-10104	-1755	875.36		19665	1.835	8178	4202			2.39	Si
SLU 77	9.45	-12177	-1899	-804.29		23700	1.835	8716	4478			2.36	Si
SLU 77	11.35	-11877	-1899	898.81		23116	1.835	8638	4438			2.34	Si
SLU 74	9.45	-11866	-1883	-787.96		23094	1.835	8635	4437			2.36	Si
SLU 74	11.35	-11504	-1883	941.49		22389	1.835	8541	4388			2.33	Si
SLU 81	9.45	-11667	-1978	-839.62		22707	1.835	8583	4410			2.23	Si
SLU 81	11.35	-11369	-1978	1011.85		22128	1.835	8506	4370			2.21	Si
SLU 84	9.45	-12093	-1986	-837.74		23536	1.835	8694	4467			2.25	Si
SLU 84	11.35	-11804	-1950	989.52		22973	1.835	8619	4428			2.27	Si
SLU 82	9.45	-11782	-1970	-821.41		22930	1.835	8613	4425			2.25	Si
SLU 82	11.35	-11430	-1934	1032.19		22246	1.835	8522	4378			2.26	Si
SLU 40	9.45	-9748	-1775	-749.33		18973	1.835	8085	4154			2.34	Si
SLU 40	11.35	-9730	-1738	918.03		18938	1.835	8081	4152			2.39	Si
SLU 39	9.45	-9634	-1783	-767.53		18750	1.835	8056	4139			2.32	Si
SLU 39	11.35	-9669	-1783	897.69		18819	1.835	8065	4144			2.32	Si
SLU 83	9.45	-11978	-1995	-855.94		23313	1.835	8664	4452			2.23	Si
SLU 83	11.35	-11743	-1995	969.18		22855	1.835	8603	4420			2.22	Si

Verifica a taglio nel piano secondo D.M. 17-01-18 (N.T.C.) §7.8.2.2.2 con rottura per scorrimento in combinazioni sismiche, γM = 2

Comb.	Quota	N	V par	M	σ0	σN	l'	fvd	Vt scorr.	Vt fess.diag.	Vt,lim	c.s.	Verifica
SLV 13	9.45	-9864	-4640	-2571.08		19198	1.835	12173	6254			1.35	Si
SLV 13	11.35	-11024	-3819	2478.06		21456	1.835	12624	6486			1.7	Si
SLV 16	9.45	-7521	-5634	-2841.52		16590	1.6191	11651	5282			0.94	No, Vu<V
SLV 16	11.35	-10137	-4825	3024.49		19730	1.835	12279	6309			1.31	Si
SLV 15	9.45	-7521	-5634	-2841.52		16590	1.6191	11651	5282			0.94	No, Vu<V
SLV 15	11.35	-10137	-4825	3024.49		19730	1.835	12279	6309			1.31	Si
SLV 3	9.45	-6517	2293	1600.5		12684	1.835	10870	5585			2.44	Si
SLV 3	11.35	-4176	1471	-1247.9		8128	1.835	9959	5117			3.48	Si
SLV 2	9.45	-8859	3287	1870.94		17243	1.835	11782	6054			1.84	Si
SLV 2	11.35	-5063	2477	-1794.33		10704	1.6893	10474	4954			2	Si
SLV 4	9.45	-6517	2293	1600.5		12684	1.835	10870	5585			2.44	Si
SLV 4	11.35	-4176	1471	-1247.9		8128	1.835	9959	5117			3.48	Si
SLV 11	9.45	-4437	-4020	-1602.33		9494	1.6691	10232	4782			1.19	Si
SLV 11	11.35	-7016	-3796	2166.65		13722	1.8261	11078	5664			1.49	Si
SLV 1	9.45	-8859	3287	1870.94		17243	1.835	11782	6054			1.84	Si
SLV 1	11.35	-5063	2477	-1794.33		10704	1.6893	10474	4954			2	Si
SLV 14	9.45	-9864	-4640	-2571.08		19198	1.835	12173	6254			1.35	Si
SLV 14	11.35	-11024	-3819	2478.06		21456	1.835	12624	6486			1.7	Si
SLV 12	9.45	-4437	-4020	-1602.33		9494	1.6691	10232	4782			1.19	Si
SLV 12	11.35	-7016	-3796	2166.65		13722	1.8261	11078	5664			1.49	Si

Verifica a pressoflessione fuori piano D.M. 17-01-18 (N.T.C.)

quota 10.3 Wa 0.05 denominatore 8 γM = 2

Comb.	fd	Sa	σ0	N	M	Mc	Coeff.s.	Verifica
SLV 8	143750	0.46	8413	-4322	221.73	563.47	2.54	Si
SLV 7	143750	0.46	8413	-4322	221.73	563.47	2.54	Si
SLV 12	143750	0.46	10002	-5139	221.73	660.59	2.98	Si
SLV 11	143750	0.46	10002	-5139	221.73	660.59	2.98	Si
SLV 3	143750	0.46	11072	-5689	221.73	724.27	3.27	Si
SLV 4	143750	0.46	11072	-5689	221.73	724.27	3.27	Si
SLV 2	143750	0.46	14942	-7677	221.73	943.35	4.25	Si
SLV 1	143750	0.46	14942	-7677	221.73	943.35	4.25	Si
SLV 16	143750	0.46	16372	-8412	221.73	1019.85	4.6	Si
SLV 15	143750	0.46	16372	-8412	221.73	1019.85	4.6	Si

Verifica dei meccanismi locali di collasso con analisi cinematica lineare

forza di aggancio al piano = 0 quota mezzeria = 10.3 Wa = 0.05 Ta = 0.0731

Comb.	N top	N base	V orto	α0	M*	e*	a0*	aLim	Verifica

Comb.	N top	N base	V orto	α0	M*	e*	a0*	aLim	Verifica
SLV 7	-3513	-3776	-138	0.026	621	0.903	0.41395	9.02602	No
SLV 8	-3513	-3776	-138	0.026	621	0.903	0.41395	9.02602	No
SLV 12	-4496	-5219	-129	0.03	718.3	0.911	0.47085	9.02602	No
SLV 11	-4496	-5219	-129	0.03	718.3	0.911	0.47085	9.02602	No
SLV 9	-8128	-12558	138	0.033	1083.5	0.935	0.50555	9.02602	No
SLV 10	-8128	-12558	138	0.033	1083.5	0.935	0.50555	9.02602	No
SLV 5	-7146	-11115	128	0.033	984.3	0.93	0.51189	9.02602	No
SLV 6	-7146	-11115	128	0.033	984.3	0.93	0.51189	9.02602	No
SLV 14	-8004	-11673	55	0.041	1070.9	0.935	0.63749	10.21601	No
SLV 13	-8004	-11673	55	0.041	1070.9	0.935	0.63749	10.21601	No

Tabella dei coefficienti di sicurezza minimi

Stato limite	Coeff.s.	Comb.	Verifica
PF_SLU	7.385	SLU 82	Si
V_SLU	2.209	SLU 81	Si
PF_SLV	2.138	SLV 15	Si
V_SLV	0.937	SLV 15	No
PFFP_SLV	2.541	SLV 7	Si
R_SLV	0.046	SLV 7	No

Maschio 211

Verifiche condotte secondo D.M. 17-01-18 (N.T.C.)

Dati geometrici

X ini.	Y ini.	X fin.	Y fin.	Quota i.	Quota.s	l	Sp.	h netta	h ini.	h fin.	a	a.s.,sx	a.s.,dx
-2.958	5.948	-5.088	5.948	L5	L6	2.13	0.28	3.5	3.5	3.5			

Caratteristiche del materiale

(Circolare 7 21-01-19 C8.5.I) Muratura in mattoni pieni e malta di calce LC2_Corti

fb	fk	fvk0	fmedio	τ0	fv0	μ	ϕ	fv,lim	E	G	FC
600000			345000	9000	20000	0.58	0.77	32500	320000000	128000000	1.2

Verifica a pressoflessione nel piano secondo D.M. 17-01-18 NTC §7.8.2.2.1 in combinazioni non sismiche, γM = 3

Comb.	Quota	N	M	σ0	Mu	c.s.	Verifica
SLU 72	9.45	-14013	-1315.65	23496	10619.26	8.072	Si
SLU 72	11.35	-11476	295.18	19242	9334.73	31.624	Si
SLU 77	9.45	-15275	-1359.44	25612	11152.95	8.204	Si
SLU 77	11.35	-12887	206.15	21607	10083.89	48.915	Si
SLU 70	9.45	-14275	-1321.48	23936	10735.93	8.124	Si
SLU 70	11.35	-11765	271.51	19726	9495.22	34.972	Si
SLU 69	9.45	-14300	-1310.15	23977	10746.84	8.203	Si
SLU 69	11.35	-11796	266.9	19779	9512.57	35.641	Si
SLU 51	9.45	-12833	-1214.1	21518	10057.18	8.284	Si
SLU 51	11.35	-10272	295.92	17224	8626.9	29.153	Si
SLU 80	9.45	-14988	-1364.94	25130	11037.63	8.087	Si
SLU 80	11.35	-12566	234.43	21070	9921.37	42.321	Si
SLU 79	9.45	-15013	-1353.61	25172	11047.77	8.162	Si
SLU 79	11.35	-12598	229.82	21123	9937.61	43.241	Si
SLU 78	9.45	-15250	-1370.77	25570	11143.1	8.129	Si
SLU 78	11.35	-12855	210.76	21554	10068.05	47.77	Si
SLU 30	9.45	-11622	-1132.04	19487	9416.59	8.318	Si
SLU 30	11.35	-9649	288.09	16179	8235.41	28.587	Si
SLU 71	9.45	-14038	-1304.32	23538	10630.46	8.15	Si
SLU 71	11.35	-11507	290.56	19295	9352.48	32.187	Si

Verifica a pressoflessione nel piano secondo D.M. 17-01-18 NTC §7.8.2.2.1 in combinazioni sismiche, γM = 2

Comb.	Quota	N	M	σ0	Mu	c.s.	Verifica
SLV 1	9.45	-3715	2908.9	6228	3754.48	1.291	Si
SLV 1	11.35	-6012	-4106.91	10081	5874.91	1.43	Si
SLV 16	9.45	-16152	-4451.27	27082	13388.98	3.008	Si
SLV 16	11.35	-10225	4117.34	17144	9361.52	2.274	Si
SLV 5	9.45	-3700	927.83	6205	3740.89	4.032	Si
SLV 5	11.35	-3826	-1625.83	6415	3860.85	2.375	Si
SLV 3	9.45	-6594	2516.6	11057	6387.28	2.538	Si
SLV 3	11.35	-8426	-3844.89	14128	7936.11	2.064	Si
SLV 2	9.45	-3715	2908.9	6228	3754.48	1.291	Si
SLV 2	11.35	-6012	-4106.91	10081	5874.91	1.43	Si
SLV 13	9.45	-13272	-4058.97	22254	11560.58	2.848	Si
SLV 13	11.35	-7811	3855.31	13097	7427.22	1.926	Si
SLV 14	9.45	-13272	-4058.97	22254	11560.58	2.848	Si
SLV 14	11.35	-7811	3855.31	13097	7427.22	1.926	Si
SLV 6	9.45	-3700	927.83	6205	3740.89	4.032	Si
SLV 6	11.35	-3826	-1625.83	6415	3860.85	2.375	Si
SLV 15	9.45	-16152	-4451.27	27082	13388.98	3.008	Si
SLV 15	11.35	-10225	4117.34	17144	9361.52	2.274	Si
SLV 4	9.45	-6594	2516.6	11057	6387.28	2.538	Si
SLV 4	11.35	-8426	-3844.89	14128	7936.11	2.064	Si

Verifica a taglio nel piano secondo D.M. 17-01-18 (N.T.C.) §7.8.2.2.2 con rottura per scorrimento in combinazioni non sismiche, γM = 3

Comb.	Quota	N	V par	M	σ0	σN	l'	fvd	Vt scorr.	Vt fess.diag.	Vt,lim	c.s.	Verifica
SLU 51	9.45	-12833	-700	-1214.1		21518	2.13	8425	5024			7.18	Si
SLU 51	11.35	-10272	-688	295.92		17224	2.13	7852	4683			6.8	Si
SLU 72	9.45	-14013	-718	-1315.65		23496	2.13	8688	5182			7.22	Si
SLU 72	11.35	-11476	-704	295.18		19242	2.13	8121	4843			6.88	Si
SLU 8	9.45	-10467	-620	-1019.17		17551	2.13	7896	4709			7.6	Si

Comb.	Quota	N	V par	M	σ0	σN	l'	fvd	Vt scorr.	Vt fess.diag.	Vt,lim	c.s.	Verifica
SLU 8	11.35	-8478	-609	284.22		14215	2.13	7451	4444			7.3	Si
SLU 49	9.45	-13096	-675	-1219.93		21958	2.13	8483	5059			7.5	Si
SLU 49	11.35	-10561	-663	272.25		17708	2.13	7917	4722			7.12	Si
SLU 70	9.45	-14275	-693	-1321.48		23936	2.13	8747	5217			7.53	Si
SLU 70	11.35	-11765	-679	271.51		19726	2.13	8186	4882			7.19	Si
SLU 30	9.45	-11622	-649	-1132.04		19487	2.13	8154	4863			7.5	Si
SLU 30	11.35	-9649	-638	288.09		16179	2.13	7713	4600			7.22	Si
SLU 48	9.45	-13121	-663	-1208.61		22000	2.13	8489	5063			7.63	Si
SLU 48	11.35	-10593	-650	267.64		17761	2.13	7924	4726			7.27	Si
SLU 9	9.45	-10443	-631	-1030.49		17509	2.13	7890	4706			7.46	Si
SLU 9	11.35	-8446	-622	288.83		14162	2.13	7444	4439			7.14	Si
SLU 50	9.45	-12858	-689	-1202.78		21560	2.13	8430	5028			7.3	Si
SLU 50	11.35	-10304	-676	291.31		17277	2.13	7859	4687			6.94	Si
SLU 71	9.45	-14038	-707	-1304.32		23538	2.13	8694	5185			7.34	Si
SLU 71	11.35	-11507	-692	290.56		19295	2.13	8128	4848			7.01	Si

Verifica a taglio nel piano secondo D.M. 17-01-18 (N.T.C.) §7.8.2.2.2 con rottura per scorrimento in combinazioni sismiche, γM = 2

Comb.	Quota	N	V par	M	σ0	σN	l'	fvd	Vt scorr.	Vt fess.diag.	Vt,lim	c.s.	Verifica
SLV 5	9.45	-3700	4853	927.83		6205	2.13	9574	5710			1.18	Si
SLV 5	11.35	-3826	4198	-1625.83		7116	1.9202	9757	5246			1.25	Si
SLV 15	9.45	-16152	-7696	-4451.27		27082	2.13	13750	8200			1.07	Si
SLV 15	11.35	-10225	-6722	4117.34		18378	1.987	12009	6681			0.99	No, Vu<V
SLV 14	9.45	-13272	-5817	-4058.97		22254	2.13	12784	7624			1.31	Si
SLV 14	11.35	-7811	-5093	3855.31		16273	1.7143	11588	5562			1.09	Si
SLV 6	9.45	-3700	4853	927.83		6205	2.13	9574	5710			1.18	Si
SLV 6	11.35	-3826	4198	-1625.83		7116	1.9202	9757	5246			1.25	Si
SLV 2	9.45	-3715	7228	2908.9		15686	0.8458	11471	2716			0.38	No, Vu<V
SLV 2	11.35	-6012	6278	-4106.91		18741	1.1458	12081	3876			0.62	No, Vu<V
SLV 13	9.45	-13272	-5817	-4058.97		22254	2.13	12784	7624			1.31	Si
SLV 13	11.35	-7811	-5093	3855.31		16273	1.7143	11588	5562			1.09	Si
SLV 1	9.45	-3715	7228	2908.9		15686	0.8458	11471	2716			0.38	No, Vu<V
SLV 1	11.35	-6012	6278	-4106.91		18741	1.1458	12081	3876			0.62	No, Vu<V
SLV 3	9.45	-6594	5349	2516.6		11488	2.0501	10631	6102			1.14	Si
SLV 3	11.35	-8426	4650	-3844.89		16480	1.8261	11629	5946			1.28	Si
SLV 16	9.45	-16152	-7696	-4451.27		27082	2.13	13750	8200			1.07	Si
SLV 16	11.35	-10225	-6722	4117.34		18378	1.987	12009	6681			0.99	No, Vu<V
SLV 4	9.45	-6594	5349	2516.6		11488	2.0501	10631	6102			1.14	Si
SLV 4	11.35	-8426	4650	-3844.89		16480	1.8261	11629	5946			1.28	Si

Verifica a pressoflessione fuori piano D.M. 17-01-18 (N.T.C.)

quota 10.3 Wa 0.05 denominatore 8 γM = 2

Comb.	fd	Sa	σ0	N	M	Mc	Coeff.s.	Verifica
SLV 6	143750	0.46	7101	-4235	257.38	558.48	2.17	Si
SLV 5	143750	0.46	7101	-4235	257.38	558.48	2.17	Si
SLV 10	143750	0.46	9263	-5525	257.38	714.81	2.78	Si
SLV 9	143750	0.46	9263	-5525	257.38	714.81	2.78	Si
SLV 1	143750	0.46	9684	-5776	257.38	744.51	2.89	Si
SLV 2	143750	0.46	9684	-5776	257.38	744.51	2.89	Si
SLV 3	143750	0.46	14060	-8385	257.38	1038.88	4.04	Si
SLV 4	143750	0.46	14060	-8385	257.38	1038.88	4.04	Si
SLV 14	143750	0.46	16891	-10074	257.38	1215.36	4.72	Si
SLV 13	143750	0.46	16891	-10074	257.38	1215.36	4.72	Si

Verifica dei meccanismi locali di collasso con analisi cinematica lineare

forza di aggancio al piano = 0 quota mezzeria = 10.3 Wa = 0.05 Ta = 0.0731

Comb.	N top	N base	V orto	α0	M*	e*	a0*	aLim	Verifica
SLV 9	-4162	-6275	323	0	729.1	0.903	0	9.02602	No
SLV 10	-4162	-6275	323	0	729.1	0.903	0	9.02602	No
SLV 5	-3316	-4508	413	0	646.4	0.897	0	9.02602	No
SLV 6	-3316	-4508	413	0	646.4	0.897	0	9.02602	No
SLV 2	-4271	-5521	258	0.01	739.9	0.904	0.16444	10.21601	No
SLV 1	-4271	-5521	258	0.01	739.9	0.904	0.16444	10.21601	No
SLV 11	-9713	-15056	-421	0.01	1285.8	0.936	0.15832	9.02602	No
SLV 12	-9713	-15056	-421	0.01	1285.8	0.936	0.15832	9.02602	No
SLV 8	-8867	-13290	-330	0.016	1200.3	0.933	0.25315	9.02602	No
SLV 7	-8867	-13290	-330	0.016	1200.3	0.933	0.25315	9.02602	No

Tabella dei coefficienti di sicurezza minimi

Stato limite	Coeff.s.	Comb.	Verifica
PF_SLU	8.072	SLU 72	Si
V_SLU	6.803	SLU 51	Si
PF_SLV	1.291	SLV 1	Si
V_SLV	0.376	SLV 1	No
PFFP_SLV	2.17	SLV 5	Si
R_SLV	0	SLV 5	No

Maschio 212

Verifiche condotte secondo D.M. 17-01-18 (N.T.C.)

Dati geometrici

X ini.	Y ini.	X fin.	Y fin.	Quota i.	Quota.s	l	Sp.	h netta	h ini.	h fin.	a	a.s.,sx	a.s.,dx
-0.117	5.948	-1.958	5.948	L5	L6	1.84	0.28	3.5	3.5	3.5			

Caratteristiche del materiale

(Circolare 7 21-01-19 C8.5.I) Muratura in mattoni pieni e malta di calce LC2_Corti

fb	fk	fvk0	fmedio	τ0	fv0	μ	ϕ	fv,lim	E	G	FC
600000			345000	9000	20000	0.58	0.77	32500	320000000	128000000	1.2

Verifica a pressoflessione nel piano secondo D.M. 17-01-18 NTC §7.8.2.2.1 in combinazioni non sismiche, γM = 3

Comb.	Quota	N	M	σ0	Mu	c.s.	Verifica
SLU 84	9.45	-12345	-590.16	23957	8019.13	13.588	Si
SLU 84	11.35	-12152	1241.68	23583	7945.18	6.399	Si
SLU 83	9.45	-12365	-574.68	23996	8026.57	13.967	Si
SLU 83	11.35	-12142	1237.27	23562	7941.04	6.418	Si
SLU 35	9.45	-10583	-559.62	20537	7283.24	13.015	Si
SLU 35	11.35	-10736	1141.02	20834	7352.54	6.444	Si
SLU 36	9.45	-10563	-575.1	20499	7274.27	12.649	Si
SLU 36	11.35	-10747	1145.43	20855	7357.33	6.423	Si
SLU 78	9.45	-12636	-598.05	24521	8127.32	13.59	Si
SLU 78	11.35	-12469	1281.8	24198	8065.68	6.292	Si
SLU 37	9.45	-10387	-576.59	20156	7192.81	12.475	Si
SLU 37	11.35	-10531	1126.98	20436	7259.29	6.441	Si
SLU 80	9.45	-12440	-615.02	24140	8054.56	13.096	Si
SLU 80	11.35	-12264	1267.76	23799	7988.05	6.301	Si
SLU 38	9.45	-10367	-592.08	20118	7183.67	12.133	Si
SLU 38	11.35	-10541	1131.39	20457	7264.18	6.421	Si
SLU 79	9.45	-12459	-599.54	24178	8061.92	13.447	Si
SLU 79	11.35	-12253	1263.35	23778	7983.96	6.32	Si
SLU 77	9.45	-12656	-582.57	24559	8134.51	13.963	Si
SLU 77	11.35	-12459	1277.39	24177	8061.7	6.311	Si

Verifica a pressoflessione nel piano secondo D.M. 17-01-18 NTC §7.8.2.2.1 in combinazioni sismiche, γM = 2

Comb.	Quota	N	M	σ0	Mu	c.s.	Verifica
SLV 13	9.45	-8532	-2780.04	16558	6787.48	2.442	Si
SLV 13	11.35	-11265	3042.73	21861	8511.45	2.797	Si
SLV 14	9.45	-8532	-2780.04	16558	6787.48	2.442	Si
SLV 14	11.35	-11265	3042.73	21861	8511.45	2.797	Si
SLV 6	9.45	-3427	233.94	6651	2982.08	12.747	Si
SLV 6	11.35	-3349	-1056	6499	2917.73	2.763	Si
SLV 16	9.45	-11243	-2641.84	21818	8498.31	3.217	Si
SLV 16	11.35	-13108	3641.37	25436	9550.66	2.623	Si
SLV 1	9.45	-5543	2104.9	10757	4651.85	2.21	Si
SLV 1	11.35	-2394	-2188.52	4645	2118.79	0.968	No, M>Mu
SLV 2	9.45	-5543	2104.9	10757	4651.85	2.21	Si
SLV 2	11.35	-2394	-2188.52	4645	2118.79	0.968	No, M>Mu
SLV 15	9.45	-11243	-2641.84	21818	8498.31	3.217	Si
SLV 15	11.35	-13108	3641.37	25436	9550.66	2.623	Si
SLV 4	9.45	-8254	2243.11	16017	6599.48	2.942	Si
SLV 4	11.35	-4236	-1589.87	8221	3635.8	2.287	Si
SLV 3	9.45	-8254	2243.11	16017	6599.48	2.942	Si
SLV 3	11.35	-4236	-1589.87	8221	3635.8	2.287	Si
SLV 5	9.45	-3427	233.94	6651	2982.08	12.747	Si
SLV 5	11.35	-3349	-1056	6499	2917.73	2.763	Si

Verifica a taglio nel piano secondo D.M. 17-01-18 (N.T.C.) §7.8.2.2.2 con rottura per scorrimento in combinazioni non sismiche, γM = 3

Comb.	Quota	N	V par	M	σ0	σN	I'	fvd	Vt scorr.	Vt fess.diag.	Vt,lim	c.s.	Verifica
SLU 83	9.45	-12365	-2001	-574.68		23996	1.8404	8755	4512			2.26	Si
SLU 83	11.35	-12142	-2002	1237.27		23562	1.8404	8697	4482			2.24	Si
SLU 77	9.45	-12656	-2039	-582.57		24559	1.8404	8830	4550			2.23	Si
SLU 77	11.35	-12459	-2040	1277.39		24177	1.8404	8779	4524			2.22	Si
SLU 84	9.45	-12345	-2028	-590.16		23957	1.8404	8750	4509			2.22	Si
SLU 84	11.35	-12152	-2025	1241.68		23583	1.8404	8700	4483			2.21	Si
SLU 37	9.45	-10387	-1862	-576.59		20156	1.8404	8243	4248			2.28	Si
SLU 37	11.35	-10531	-1863	1126.98		20436	1.8404	8280	4267			2.29	Si
SLU 78	9.45	-12636	-2066	-598.05		24521	1.8404	8825	4548			2.2	Si
SLU 78	11.35	-12469	-2063	1281.8		24198	1.8404	8782	4525			2.19	Si
SLU 36	9.45	-10563	-1892	-575.1		20499	1.8404	8289	4271			2.26	Si
SLU 36	11.35	-10747	-1888	1145.43		20855	1.8404	8336	4296			2.27	Si
SLU 38	9.45	-10367	-1889	-592.08		20118	1.8404	8238	4245			2.25	Si
SLU 38	11.35	-10541	-1886	1131.39		20457	1.8404	8283	4268			2.26	Si
SLU 80	9.45	-12440	-2063	-615.02		24140	1.8404	8774	4521			2.19	Si
SLU 80	11.35	-12264	-2060	1267.76		23799	1.8404	8729	4498			2.18	Si
SLU 79	9.45	-12459	-2036	-599.54		24178	1.8404	8779	4524			2.22	Si
SLU 79	11.35	-12253	-2037	1263.35		23778	1.8404	8726	4497			2.21	Si
SLU 42	9.45	-10273	-1854	-567.22		19936	1.8404	8214	4233			2.28	Si
SLU 42	11.35	-10430	-1850	1105.31		20240	1.8404	8254	4254			2.3	Si

Verifica a taglio nel piano secondo D.M. 17-01-18 (N.T.C.) §7.8.2.2.2 con rottura per scorrimento in combinazioni sismiche, γM = 2

Comb.	Quota	N	V par	M	σ0	σN	I'	fvd	Vt scorr.	Vt fess.diag.	Vt,lim	c.s.	Verifica
SLV 1	9.45	-5543	3615	2104.9		12210	1.6214	10775	4892			1.35	Si
SLV 1	11.35	-2394	2536	-2188.52		487146	0.0175	16250	80			0.03	No, Vu<V
SLV 14	9.45	-8532	-5345	-2780.04		17090	1.7831	11751	5867			1.1	Si
SLV 14	11.35	-11265	-4632	3042.73		21861	1.8404	12705	6547			1.41	Si
SLV 15	9.45	-11243	-5812	-2641.84		21818	1.8404	12697	6543			1.13	Si
SLV 15	11.35	-13108	-4734	3641.37		25436	1.8404	13421	6916			1.46	Si
SLV 12	9.45	-13359	-3220	-770.88		25924	1.8404	13518	6966			2.16	Si
SLV 12	11.35	-12152	-2345	2508.85		23583	1.8404	13050	6725			2.87	Si
SLV 11	9.45	-13359	-3220	-770.88		25924	1.8404	13518	6966			2.16	Si
SLV 11	11.35	-12152	-2345	2508.85		23583	1.8404	13050	6725			2.87	Si
SLV 13	9.45	-8532	-5345	-2780.04		17090	1.7831	11751	5867			1.1	Si
SLV 13	11.35	-11265	-4632	3042.73		21861	1.8404	12705	6547			1.41	Si
SLV 4	9.45	-8254	3149	2243.11		16017	1.8404	11537	5945			1.89	Si
SLV 4	11.35	-4236	2433	-1589.87		9255	1.6346	10184	4661			1.92	Si
SLV 2	9.45	-5543	3615	2104.9		12210	1.6214	10775	4892			1.35	Si
SLV 2	11.35	-2394	2536	-2188.52		487146	0.0175	16250	80			0.03	No, Vu<V

Comb.	Quota	N	V par	M	σ0	σN	l'	fvd	Vt scorr.	Vt fess.diag.	Vt,lim	c.s.	Verifica
SLV 16	9.45	-11243	-5812	-2641.84		21818	1.8404	12697	6543			1.13	Si
SLV 16	11.35	-13108	-4734	3641.37		25436	1.8404	13421	6916			1.46	Si
SLV 3	9.45	-8254	3149	2243.11		16017	1.8404	11537	5945			1.89	Si
SLV 3	11.35	-4236	2433	-1589.87		9255	1.6346	10184	4661			1.92	Si

Verifica a pressoflessione fuori piano D.M. 17-01-18 (N.T.C.)

quota 10.3 Wa 0.05 denominatore 8 γM = 2

Comb.	fd	Sa	σ0	N	M	Mc	Coeff.s.	Verifica
SLV 6	143750	0.46	6848	-3529	222.38	466.35	2.1	Si
SLV 5	143750	0.46	6848	-3529	222.38	466.35	2.1	Si
SLV 2	143750	0.46	8377	-4317	222.38	562.9	2.53	Si
SLV 1	143750	0.46	8377	-4317	222.38	562.9	2.53	Si
SLV 9	143750	0.46	10034	-5171	222.38	664.47	2.99	Si
SLV 10	143750	0.46	10034	-5171	222.38	664.47	2.99	Si
SLV 4	143750	0.46	12874	-6634	222.38	830.9	3.74	Si
SLV 3	143750	0.46	12874	-6634	222.38	830.9	3.74	Si
SLV 13	143750	0.46	18999	-9790	222.38	1157.51	5.2	Si
SLV 14	143750	0.46	18999	-9790	222.38	1157.51	5.2	Si

Verifica dei meccanismi locali di collasso con analisi cinematica lineare

forza di aggancio al piano = 0 quota mezzeria = 10.3 Wa = 0.05 Ta = 0.0731

Comb.	N top	N base	V orto	α0	M*	e*	a0*	aLim	Verifica
SLV 5	-3269	-2571	166	0.019	597.9	0.9	0.31266	9.02602	No
SLV 6	-3269	-2571	166	0.019	597.9	0.9	0.31266	9.02602	No
SLV 9	-4643	-4726	175	0.022	733.8	0.912	0.35622	9.02602	No
SLV 10	-4643	-4726	175	0.022	733.8	0.912	0.35622	9.02602	No
SLV 7	-7321	-11462	-175	0.028	1002.7	0.931	0.43237	9.02602	No
SLV 8	-7321	-11462	-175	0.028	1002.7	0.931	0.43237	9.02602	No
SLV 11	-8695	-13616	-165	0.03	1141.6	0.938	0.46893	9.02602	No
SLV 12	-8695	-13616	-165	0.03	1141.6	0.938	0.46893	9.02602	No
SLV 13	-7665	-10351	67	0.04	1037.5	0.933	0.61926	10.21601	No
SLV 14	-7665	-10351	67	0.04	1037.5	0.933	0.61926	10.21601	No

Tabella dei coefficienti di sicurezza minimi

Stato limite	Coeff.s.	Comb.	Verifica
PF_SLU	6.292	SLU 78	Si
V_SLU	2.183	SLU 80	Si
PF_SLV	0.968	SLV 1	No
V_SLV	0.031	SLV 1	No
PFFP_SLV	2.097	SLV 5	Si
R_SLV	0.035	SLV 5	No

Maschio 213

Verifiche condotte secondo D.M. 17-01-18 (N.T.C.)

Dati geometrici

X ini.	Y ini.	X fin.	Y fin.	Quota i.	Quota.s	l	Sp.	h netta	h ini.	h fin.	a	a.s.,sx	a.s.,dx
-0.117	-3.169	-0.117	5.948	L5	L6	9.117	0.28	3.5	3.5	3.5			

Caratteristiche del materiale

(Circolare 7 21-01-19 C8.5.I) Muratura in mattoni pieni e malta di calce LC2_Corti

fb	fk	fvk0	fmedio	τ0	fv0	μ	ϕ	fv,lim	E	G	FC
600000			345000	9000	20000	0.58	0.77	32500	320000000	128000000	1.2

Verifica a pressoflessione nel piano secondo D.M. 17-01-18 NTC §7.8.2.2.1 in combinazioni non sismiche, γM = 3

Comb.	Quota	N	M	σ0	Mu	c.s.	Verifica
SLU 19	8.55	-55073	-4248.62	21573	184569.95	43.442	Si
SLU 19	12.05	-25305	-758.21	9913	101320.31	133.63	Si
SLU 73	8.55	-70479	-5359.51	27608	212398.08	39.63	Si
SLU 73	12.05	-32573	-884.05	12760	125231.23	141.656	Si
SLU 76	8.55	-72024	-4777.58	28213	214613.98	44.921	Si
SLU 76	12.05	-33628	-905.52	13173	128508.85	141.917	Si
SLU 40	8.55	-61252	-4994.05	23994	196981.18	39.443	Si
SLU 40	12.05	-28064	-1010.36	10993	110669.3	109.534	Si
SLU 10	8.55	-52434	-4225.09	20539	178757.84	42.309	Si
SLU 10	12.05	-24201	-603.11	9480	97483.97	161.634	Si
SLU 82	8.55	-73119	-5383.04	28642	216121.8	40.149	Si
SLU 82	12.05	-33678	-1039.15	13192	128662.13	123.814	Si
SLU 31	8.55	-58613	-4970.53	22960	191884.17	38.604	Si
SLU 31	12.05	-26960	-855.26	10561	106966.55	125.068	Si
SLU 52	8.55	-64300	-4614.08	25188	202486.55	43.884	Si
SLU 52	12.05	-29814	-631.9	11679	116427.67	184.249	Si
SLU 34	8.55	-60157	-4388.59	23565	194903.6	44.411	Si
SLU 34	12.05	-28014	-876.73	10974	110503.78	126.04	Si
SLU 61	8.55	-66940	-4637.61	26222	206925.36	44.619	Si
SLU 61	12.05	-30919	-787	12112	119992.17	152.467	Si

Verifica a pressoflessione nel piano secondo D.M. 17-01-18 NTC §7.8.2.2.1 in combinazioni sismiche, γM = 2

Comb.	Quota	N	M	σ0	Mu	c.s.	Verifica
SLV 11	8.55	-55265	46347.97	21648	207298.19	4.473	Si
SLV 11	12.05	-24061	13081.09	9425	101224.79	7.738	Si
SLV 7	8.55	-45252	44043.5	17726	176359.98	4.004	Si
SLV 7	12.05	-21655	12178.12	8483	91865.21	7.543	Si
SLV 8	8.55	-45252	44043.5	17726	176359.98	4.004	Si

Comb.	Quota	N	M	σ0	Mu	c.s.	Verifica
SLV 8	12.05	-21655	12178.12	8483	91865.21	7.543	Si
SLV 5	8.55	-44925	-51660.09	17598	175300.49	3.393	Si
SLV 5	12.05	-22652	-14160.82	8873	95764.7	6.763	Si
SLV 9	8.55	-54938	-49355.62	21520	206334.38	4.181	Si
SLV 9	12.05	-25058	-13257.85	9816	105054.16	7.924	Si
SLV 12	8.55	-55265	46347.97	21648	207298.19	4.473	Si
SLV 12	12.05	-24061	13081.09	9425	101224.79	7.738	Si
SLV 2	8.55	-33357	-20852.38	13066	135800.33	6.512	Si
SLV 2	12.05	-19497	-5995.65	7637	83323.04	13.897	Si
SLV 10	8.55	-54938	-49355.62	21520	206334.38	4.181	Si
SLV 10	12.05	-25058	-13257.85	9816	105054.16	7.924	Si
SLV 1	8.55	-33357	-20852.38	13066	135800.33	6.512	Si
SLV 1	12.05	-19497	-5995.65	7637	83323.04	13.897	Si
SLV 6	8.55	-44925	-51660.09	17598	175300.49	3.393	Si
SLV 6	12.05	-22652	-14160.82	8873	95764.7	6.763	Si

Verifica a taglio nel piano secondo D.M. 17-01-18 (N.T.C.) §7.8.2.2.2 con rottura per scorrimento in combinazioni non sismiche, γM = 3

Comb.	Quota	N	V par	M	σ0	σN	l'	fvd	Vt scorr.	Vt fess.diag.	Vt,lim	c.s.	Verifica
SLU 44	8.55	-58306	-863	-3583.21		22840	9.1173	8601	21957			25.44	Si
SLU 44	12.05	-27354	-448	-339		10715	9.1173	6984	17830			39.8	Si
SLU 13	8.55	-53978	-870	-3643.16		21144	9.1173	8375	21380			24.59	Si
SLU 13	12.05	-25256	-454	-624.58		9893	9.1173	6875	17550			38.63	Si
SLU 34	8.55	-60157	-878	-4388.59		23565	9.1173	8698	22203			25.29	Si
SLU 34	12.05	-28014	-462	-876.73		10974	9.1173	7019	17918			38.79	Si
SLU 23	8.55	-52619	-869	-3939.66		20612	9.1173	8304	21198			24.39	Si
SLU 23	12.05	-24499	-454	-562.36		9597	9.1173	6835	17449			38.42	Si
SLU 47	8.55	-59851	-861	-3001.28		23445	9.1173	8682	22163			25.73	Si
SLU 47	12.05	-28409	-446	-360.47		11128	9.1173	7039	17970			40.27	Si
SLU 26	8.55	-54163	-868	-3357.72		21217	9.1173	8384	21404			24.67	Si
SLU 26	12.05	-25554	-452	-583.83		10010	9.1173	6890	17590			38.88	Si
SLU 10	8.55	-52434	-871	-4225.09		20539	9.1173	8294	21174			24.3	Si
SLU 10	12.05	-24201	-456	-603.11		9480	9.1173	6820	17409			38.17	Si
SLU 2	8.55	-46440	-861	-3194.23		18191	9.1173	7981	20374			23.67	Si
SLU 2	12.05	-21740	-447	-310.21		8516	9.1173	6691	17081			38.26	Si
SLU 31	8.55	-58613	-880	-4970.53		22960	9.1173	8617	21998			25	Si
SLU 31	12.05	-26960	-464	-855.26		10561	9.1173	6964	17777			38.34	Si
SLU 5	8.55	-47984	-859	-2612.29		18796	9.1173	8062	20580			23.96	Si
SLU 5	12.05	-22795	-445	-331.68		8929	9.1173	6746	17222			38.72	Si

Verifica a taglio nel piano secondo D.M. 17-01-18 (N.T.C.) §7.8.2.2.2 con rottura per scorrimento in combinazioni sismiche, γM = 2

Comb.	Quota	N	V par	M	σ0	σN	l'	fvd	Vt scorr.	Vt fess.diag.	Vt,lim	c.s.	Verifica
SLV 7	8.55	-45252	17293	44043.5		17726	9.1173	11879	30324			1.75	Si
SLV 7	12.05	-21655	13101	12178.12		8483	9.1173	10030	25605			1.95	Si
SLV 6	8.55	-44925	-17717	-51660.09		17598	9.1173	11853	30259			1.71	Si
SLV 6	12.05	-22652	-13319	-14160.82		8873	9.1173	10108	25804			1.94	Si
SLV 8	8.55	-45252	17293	44043.5		17726	9.1173	11879	30324			1.75	Si
SLV 8	12.05	-21655	13101	12178.12		8483	9.1173	10030	25605			1.95	Si
SLV 11	8.55	-55265	17670	46347.97		21648	9.1173	12663	32327			1.83	Si
SLV 11	12.05	-24061	13282	13081.09		9425	9.1173	10218	26086			1.96	Si
SLV 5	8.55	-44925	-17717	-51660.09		17598	9.1173	11853	30259			1.71	Si
SLV 5	12.05	-22652	-13319	-14160.82		8873	9.1173	10108	25804			1.94	Si
SLV 2	8.55	-33357	-5903	-20852.38		13066	9.1173	10947	27945			4.73	Si
SLV 2	12.05	-19497	-4283	-5995.65		7637	9.1173	9861	25173			5.88	Si
SLV 9	8.55	-54938	-17340	-49355.62		21520	9.1173	12637	32261			1.86	Si
SLV 9	12.05	-25058	-13138	-13257.85		9816	9.1173	10296	26285			2	Si
SLV 12	8.55	-55265	17670	46347.97		21648	9.1173	12663	32327			1.83	Si
SLV 12	12.05	-24061	13282	13081.09		9425	9.1173	10218	26086			1.96	Si
SLV 1	8.55	-33357	-5903	-20852.38		13066	9.1173	10947	27945			4.73	Si
SLV 1	12.05	-19497	-4283	-5995.65		7637	9.1173	9861	25173			5.88	Si
SLV 10	8.55	-54938	-17340	-49355.62		21520	9.1173	12637	32261			1.86	Si
SLV 10	12.05	-25058	-13138	-13257.85		9816	9.1173	10296	26285			2	Si

Verifica a pressoflessione fuori piano D.M. 17-01-18 (N.T.C.)

quota 10.3 Wa 0.05 denominatore 8 γM = 2

Comb.	fd	Sa	σ0	N	M	Mc	Coeff.s.	Verifica
SLV 2	143750	0.46	9936	-25365	1101.69	3262.29	2.96	Si
SLV 1	143750	0.46	9936	-25365	1101.69	3262.29	2.96	Si
SLV 4	143750	0.46	10067	-25700	1101.69	3301.54	3	Si
SLV 3	143750	0.46	10067	-25700	1101.69	3301.54	3	Si
SLV 5	143750	0.46	12455	-31796	1101.69	3997.65	3.63	Si
SLV 6	143750	0.46	12455	-31796	1101.69	3997.65	3.63	Si
SLV 8	143750	0.46	12893	-32913	1101.69	4121.65	3.74	Si
SLV 7	143750	0.46	12893	-32913	1101.69	4121.65	3.74	Si
SLV 9	143750	0.46	14746	-37643	1101.69	4634.08	4.21	Si
SLV 10	143750	0.46	14746	-37643	1101.69	4634.08	4.21	Si

Verifica dei meccanismi locali di collasso con analisi cinematica lineare

forza di aggancio al piano = 0 quota mezzeria = 10.3 Wa = 0.05 Ta = 0.0731

Comb.	N top	N base	V orto	α0	M*	e*	a0*	aLim	Verifica
SLV 13	-27516	-66735	-237	0.042	4086.7	0.92	0.66997	10.21601	No
SLV 14	-27516	-66735	-237	0.042	4086.7	0.92	0.66997	10.21601	No
SLV 16	-27217	-66833	-234	0.042	4056.7	0.919	0.67163	10.21601	No
SLV 15	-27217	-66833	-234	0.042	4056.7	0.919	0.67163	10.21601	No
SLV 4	-19197	-33455	231	0.043	3257.5	0.906	0.69502	10.21601	No
SLV 3	-19197	-33455	231	0.043	3257.5	0.906	0.69502	10.21601	No
SLV 1	-19497	-33357	229	0.043	3287.1	0.906	0.69534	10.21601	No
SLV 2	-19497	-33357	229	0.043	3287.1	0.906	0.69534	10.21601	No
SLV 10	-25058	-54938	-76	0.047	3840.6	0.916	0.75242	9.02602	No
SLV 9	-25058	-54938	-76	0.047	3840.6	0.916	0.75242	9.02602	No

Tabella dei coefficienti di sicurezza minimi

Stato limite	Coeff.s.	Comb.	Verifica
PF_SLU	38.604	SLU 31	Si
V_SLU	23.674	SLU 2	Si
PF_SLV	3.393	SLV 5	Si
V_SLV	1.708	SLV 5	Si
PFFP_SLV	2.961	SLV 1	Si
R_SLV	0.066	SLV 13	No

Maschio 214

Verifiche condotte secondo D.M. 17-01-18 (N.T.C.)

Dati geometrici

X ini.	Y ini.	X fin.	Y fin.	Quota i.	Quota.s	l	Sp.	h netta	h ini.	h fin.	a	a.s.,sx	a.s.,dx
-24.613	-3.183	-24.613	5.937	L6	L7	9.12	0.28	3.1	3.1	3.1			

Caratteristiche del materiale

(Circolare 7 21-01-19 C8.5.I) Muratura in mattoni pieni e malta di calce LC2_Corti

fb	fk	fvk0	fmedio	τ0	fv0	μ	ϕ	fv,lim	E	G	FC
600000			345000	9000	20000	0.58	0.77	32500	320000000	128000000	1.2

Verifica a pressoflessione nel piano secondo D.M. 17-01-18 NTC §7.8.2.2.1 in combinazioni non sismiche, γM = 3

Comb.	Quota	N	M	σ0	Mu	c.s.	Verifica
SLU 31	12.05	-35363	-938.41	13848	133842.08	142.626	Si
SLU 31	15.15	-10998	-1304.86	4307	47499.95	36.402	Si
SLU 33	12.05	-37514	-362.51	14691	140214.25	386.791	Si
SLU 33	15.15	-11930	-1341.04	4672	51281.45	38.24	Si
SLU 40	12.05	-36570	-1090.31	14321	137441.98	126.057	Si
SLU 40	15.15	-11245	-1316.3	4404	48505.3	36.85	Si
SLU 34	12.05	-36818	-263.26	14418	138174.85	524.853	Si
SLU 34	15.15	-11762	-1335.26	4606	50601.94	37.897	Si
SLU 73	12.05	-43104	-1027.83	16880	155823.71	151.605	Si
SLU 73	15.15	-13501	-1522.75	5287	57567.16	37.805	Si
SLU 42	12.05	-38025	-415.17	14891	141697.76	341.304	Si
SLU 42	15.15	-12009	-1346.69	4703	51599.02	38.315	Si
SLU 23	12.05	-32652	-557.78	12787	125520.03	225.036	Si
SLU 23	15.15	-10393	-1166.56	4070	45024.58	38.596	Si
SLU 10	12.05	-32114	-830.3	12576	123833	149.142	Si
SLU 10	15.15	-10055	-1155.21	3938	43635.54	37.773	Si
SLU 82	12.05	-44310	-1179.73	17352	159014.07	134.789	Si
SLU 82	15.15	-13747	-1534.19	5384	58545.42	38.161	Si
SLU 19	12.05	-33321	-982.21	13049	127604.79	129.917	Si
SLU 19	15.15	-10302	-1166.65	4034	44651.09	38.273	Si

Verifica a pressoflessione nel piano secondo D.M. 17-01-18 NTC §7.8.2.2.1 in combinazioni sismiche, γM = 2

Comb.	Quota	N	M	σ0	Mu	c.s.	Verifica
SLV 9	12.05	-29755	-15768.66	11652	122743.16	7.784	Si
SLV 9	15.15	-9398	-6276.75	3680	41564.6	6.622	Si
SLV 2	12.05	-34215	-2085.26	13399	138912.62	66.617	Si
SLV 2	15.15	-9153	-3027.27	3584	40514.43	13.383	Si
SLV 10	12.05	-29755	-15768.66	11652	122743.16	7.784	Si
SLV 10	15.15	-9398	-6276.75	3680	41564.6	6.622	Si
SLV 11	12.05	-30788	12973.77	12057	126540.45	9.754	Si
SLV 11	15.15	-10638	4569.96	4166	46854.9	10.253	Si
SLV 6	12.05	-31647	-14096.25	12393	129671.96	9.199	Si
SLV 6	15.15	-9085	-6529.15	3558	40220.66	6.16	Si
SLV 12	12.05	-30788	12973.77	12057	126540.45	9.754	Si
SLV 12	15.15	-10638	4569.96	4166	46854.9	10.253	Si
SLV 7	12.05	-32680	14646.18	12798	133412.11	9.109	Si
SLV 7	15.15	-10325	4317.56	4043	45522.31	10.544	Si
SLV 1	12.05	-34215	-2085.26	13399	138912.62	66.617	Si
SLV 1	15.15	-9153	-3027.27	3584	40514.43	13.383	Si
SLV 8	12.05	-32680	14646.18	12798	133412.11	9.109	Si
SLV 8	15.15	-10325	4317.56	4043	45522.31	10.544	Si
SLV 5	12.05	-31647	-14096.25	12393	129671.96	9.199	Si
SLV 5	15.15	-9085	-6529.15	3558	40220.66	6.16	Si

Verifica a taglio nel piano secondo D.M. 17-01-18 (N.T.C.) §7.8.2.2.2 con rottura per scorrimento in combinazioni non sismiche, γM = 3

Comb.	Quota	N	V par	M	σ0	σN	l'	fvd	Vt scorr.	Vt fess.diag.	Vt,lim	c.s.	Verifica
SLU 31	12.05	-35363	-417	-938.41		13848	9.12	7402	18902			45.36	Si
SLU 31	15.15	-10998	-146	-1304.86		4307	9.12	6130	15653			107.57	Si
SLU 13	12.05	-33570	-407	-155.15		13146	9.12	7308	18663			45.9	Si
SLU 13	15.15	-10819	-137	-1185.61		4237	9.12	6120	15629			113.77	Si
SLU 73	12.05	-43104	-422	-1027.83		16880	9.12	7806	19934			47.22	Si
SLU 73	15.15	-13501	-151	-1522.75		5287	9.12	6260	15987			106.13	Si
SLU 26	12.05	-34107	-405	117.37		13356	9.12	7336	18734			46.24	Si
SLU 26	15.15	-11157	-136	-1196.96		4369	9.12	6138	15674			115.12	Si
SLU 2	12.05	-29403	-398	-449.67		11514	9.12	7091	18107			45.52	Si
SLU 2	15.15	-9450	-130	-1016.91		3701	9.12	6049	15447			119	Si
SLU 23	12.05	-32652	-406	-557.78		12787	9.12	7260	18540			45.61	Si
SLU 23	15.15	-10393	-137	-1166.56		4070	9.12	6098	15572			113.63	Si
SLU 34	12.05	-36818	-415	-263.26		14418	9.12	7478	19096			45.97	Si
SLU 34	15.15	-11762	-145	-1335.26		4606	9.12	6170	15755			108.94	Si
SLU 5	12.05	-30858	-396	225.48		12084	9.12	7167	18301			46.17	Si
SLU 5	15.15	-10214	-129	-1047.31		4000	9.12	6089	15549			120.62	Si
SLU 10	12.05	-32114	-408	-830.3		12576	9.12	7232	18469			45.27	Si

Comb.	Quota	N	V par	M	σ0	σN	l'	fvd	Vt scorr.	Vt fess.diag.	Vt,lim	c.s.	Verifica
SLU 10	15.15	-10055	-138	-1155.21		3938	9.12	6081	15527			112.3	Si
SLU 52	12.05	-39855	-413	-919.72		15607	9.12	7637	19501			47.17	Si
SLU 52	15.15	-12558	-143	-1373.1		4918	9.12	6211	15861			110.62	Si

Verifica a taglio nel piano secondo D.M. 17-01-18 (N.T.C.) §7.8.2.2.2 con rottura per scorrimento in combinazioni sismiche, γM = 2

Comb.	Quota	N	V par	M	σ0	σN	l'	fvd	Vt scorr.	Vt fess.diag.	Vt,lim	c.s.	Verifica
SLV 10	12.05	-29755	-13340	-15768.66		11652	9.12	10664	27231			2.04	Si
SLV 10	15.15	-9398	-5986	-6276.75		3680	9.12	9069	23160			3.87	Si
SLV 8	12.05	-32680	13273	14646.18		12798	9.12	10893	27816			2.1	Si
SLV 8	15.15	-10325	5927	4317.56		4043	9.12	9142	23345			3.94	Si
SLV 5	12.05	-31647	-12960	-14096.25		12393	9.12	10812	27609			2.13	Si
SLV 5	15.15	-9085	-5698	-6529.15		3558	9.12	9045	23097			4.05	Si
SLV 7	12.05	-32680	13273	14646.18		12798	9.12	10893	27816			2.1	Si
SLV 7	15.15	-10325	5927	4317.56		4043	9.12	9142	23345			3.94	Si
SLV 9	12.05	-29755	-13340	-15768.66		11652	9.12	10664	27231			2.04	Si
SLV 9	15.15	-9398	-5986	-6276.75		3680	9.12	9069	23160			3.87	Si
SLV 11	12.05	-30788	12893	12973.77		12057	9.12	10745	27438			2.13	Si
SLV 11	15.15	-10638	5638	4569.96		4166	9.12	9167	23408			4.15	Si
SLV 6	12.05	-31647	-12960	-14096.25		12393	9.12	10812	27609			2.13	Si
SLV 6	15.15	-9085	-5698	-6529.15		3558	9.12	9045	23097			4.05	Si
SLV 12	12.05	-30788	12893	12973.77		12057	9.12	10745	27438			2.13	Si
SLV 12	15.15	-10638	5638	4569.96		4166	9.12	9167	23408			4.15	Si
SLV 14	12.05	-27909	-4601	-7659.95		10929	9.12	10519	26862			5.84	Si
SLV 14	15.15	-10198	-2254	-2185.94		3993	9.12	9132	23320			10.35	Si
SLV 13	12.05	-27909	-4601	-7659.95		10929	9.12	10519	26862			5.84	Si
SLV 13	15.15	-10198	-2254	-2185.94		3993	9.12	9132	23320			10.35	Si

Verifica a pressoflessione fuori piano D.M. 17-01-18 (N.T.C.)

quota 13.6 Wa 0.05 denominatore 8 γM = 2

Comb.	fd	Sa	σ0	N	M	Mc	Coeff.s.	Verifica
SLV 14	143750	0.53	7113	-18163	994.01	2394.84	2.41	Si
SLV 13	143750	0.53	7113	-18163	994.01	2394.84	2.41	Si
SLV 15	143750	0.53	7187	-18354	994.01	2418.37	2.43	Si
SLV 16	143750	0.53	7187	-18354	994.01	2418.37	2.43	Si
SLV 10	143750	0.53	7481	-19104	994.01	2510.75	2.53	Si
SLV 9	143750	0.53	7481	-19104	994.01	2510.75	2.53	Si
SLV 11	143750	0.53	7730	-19738	994.01	2588.55	2.6	Si
SLV 12	143750	0.53	7730	-19738	994.01	2588.55	2.6	Si
SLV 5	143750	0.53	7871	-20100	994.01	2632.71	2.65	Si
SLV 6	143750	0.53	7871	-20100	994.01	2632.71	2.65	Si

Verifica dei meccanismi locali di collasso con analisi cinematica lineare

forza di aggancio al piano = 0 quota mezzeria = 13.6 Wa = 0.05 Ta = 0.0573

Comb.	N top	N base	V orto	α0	M*	e*	a0*	aLim	Verifica
SLV 4	-9525	-34525	-1204	0	2159.2	0.891	0	9.07197	No
SLV 15	-10569	-28219	1215	0	2258.3	0.893	0	9.07197	No
SLV 16	-10569	-28219	1215	0	2258.3	0.893	0	9.07197	No
SLV 13	-10198	-27909	1206	0	2222.9	0.892	0	9.07197	No
SLV 1	-9153	-34215	-1213	0	2124.2	0.89	0	9.07197	No
SLV 3	-9525	-34525	-1204	0	2159.2	0.891	0	9.07197	No
SLV 14	-10198	-27909	1206	0	2222.9	0.892	0	9.07197	No
SLV 2	-9153	-34215	-1213	0	2124.2	0.89	0	9.07197	No
SLV 6	-9085	-31647	-377	0.042	2117.7	0.89	0.68199	8.24559	No
SLV 5	-9085	-31647	-377	0.042	2117.7	0.89	0.68199	8.24559	No

Tabella dei coefficienti di sicurezza minimi

Stato limite	Coeff.s.	Comb.	Verifica
PF_SLU	36.402	SLU 31	Si
V_SLU	45.268	SLU 10	Si
PF_SLV	6.16	SLV 5	Si
V_SLV	2.041	SLV 9	Si
PFFP_SLV	2.409	SLV 13	Si
R_SLV	0	SLV 1	No

Maschio 215

Verifiche condotte secondo D.M. 17-01-18 (N.T.C.)

Dati geometrici

X ini.	Y ini.	X fin.	Y fin.	Quota i.	Quota.s	l	Sp.	h netta	h ini.	h fin.	a	a.s.,sx	a.s.,dx
-22.878	5.937	-24.613	5.937	L6	L7	1.735	0.28	3.1	3.1	3.1			

Caratteristiche del materiale

(Circolare 7 21-01-19 C8.5.I) Muratura in mattoni pieni e malta di calce LC2_Corti

fb	fk	fvk0	fmedio	τ0	fv0	μ	ϕ	fv,lim	E	G	FC
600000			345000	9000	20000	0.58	0.77	32500	320000000	128000000	1.2

Verifica a pressoflessione nel piano secondo D.M. 17-01-18 NTC §7.8.2.2.1 in combinazioni non sismiche, γM = 3

Comb.	Quota	N	M	σ0	Mu	c.s.	Verifica
SLU 70	12.95	-5358	-22.58	11028	4018.49	177.997	Si
SLU 70	14.85	-3739	-770.17	7696	2936.94	3.813	Si
SLU 77	12.95	-5204	92.36	10712	3920.73	42.449	Si
SLU 77	14.85	-3738	-773.71	7695	2936.78	3.796	Si
SLU 28	12.95	-4423	-16.78	9105	3408.44	203.159	Si
SLU 28	14.85	-3309	-688.4	6811	2630.55	3.821	Si

Comb.	Quota	N	M	σ0	Mu	c.s.	Verifica
SLU 32	12.95	-3821	181.41	7865	2994.42	16.507	Si
SLU 32	14.85	-2788	-588.63	5739	2248.34	3.82	Si
SLU 74	12.95	-4755	175.61	9787	3629.16	20.666	Si
SLU 74	14.85	-3218	-670.41	6624	2564.54	3.825	Si
SLU 35	12.95	-4270	98.16	8789	3304.39	33.663	Si
SLU 35	14.85	-3309	-691.93	6811	2630.39	3.802	Si
SLU 75	12.95	-4739	194.92	9754	3618.46	18.563	Si
SLU 75	14.85	-3225	-676.57	6638	2569.41	3.798	Si
SLU 36	12.95	-4254	117.48	8756	3293.35	28.033	Si
SLU 36	14.85	-3315	-698.1	6825	2635.23	3.775	Si
SLU 78	12.95	-5188	111.68	10679	3910.36	35.014	Si
SLU 78	14.85	-3745	-779.87	7709	2941.49	3.772	Si
SLU 33	12.95	-3804	200.72	7831	2983.06	14.862	Si
SLU 33	14.85	-2795	-594.8	5753	2253.34	3.788	Si

Verifica a pressoflessione nel piano secondo D.M. 17-01-18 NTC §7.8.2.2.1 in combinazioni sismiche, γM = 2

Comb.	Quota	N	M	σ0	Mu	c.s.	Verifica
SLV 2	12.95	-2239	1456.66	4609	1868.97	1.283	Si
SLV 2	14.85	-2376	-827.96	4891	1978.79	2.39	Si
SLV 7	12.95	-4973	-215.79	10237	3952.84	18.318	Si
SLV 7	14.85	-2429	-933.11	5000	2020.9	2.166	Si
SLV 3	12.95	-3371	1047.79	6939	2758.18	2.632	Si
SLV 3	14.85	-2636	-1066.4	5425	2184.91	2.049	Si
SLV 13	12.95	-3044	-790.61	6265	2505.02	3.168	Si
SLV 13	14.85	-921	347.69	1895	786.17	2.261	Si
SLV 14	12.95	-3044	-790.61	6265	2505.02	3.168	Si
SLV 14	14.85	-921	347.69	1895	786.17	2.261	Si
SLV 8	12.95	-4973	-215.79	10237	3952.84	18.318	Si
SLV 8	14.85	-2429	-933.11	5000	2020.9	2.166	Si
SLV 1	12.95	-2239	1456.66	4609	1868.97	1.283	Si
SLV 1	14.85	-2376	-827.96	4891	1978.79	2.39	Si
SLV 4	12.95	-3371	1047.79	6939	2758.18	2.632	Si
SLV 4	14.85	-2636	-1066.4	5425	2184.91	2.049	Si
SLV 5	12.95	-1200	1147.14	0	0	0	No, e>l/2
SLV 5	14.85	-1564	-138.3	3219	1320.95	9.552	Si
SLV 6	12.95	-1200	1147.14	0	0	0	No, e>l/2
SLV 6	14.85	-1564	-138.3	3219	1320.95	9.552	Si

Verifica a taglio nel piano secondo D.M. 17-01-18 (N.T.C.) §7.8.2.2.2 con rottura per scorrimento in combinazioni non sismiche, γM = 3

Comb.	Quota	N	V par	M	σ0	σN	l'	fvd	Vt scorr.	Vt fess.diag.	Vt,lim	c.s.	Verifica
SLU 75	12.95	-4739	788	194.92		9754	1.735	6856	3331			4.23	Si
SLU 75	14.85	-3225	787	-676.57		6638	1.735	6441	3129			3.98	Si
SLU 42	12.95	-3517	738	272.87		7240	1.735	6521	3168			4.29	Si
SLU 42	14.85	-2485	737	-521.91		5115	1.735	6238	3030			4.11	Si
SLU 74	12.95	-4755	763	175.61		9787	1.735	6861	3333			4.37	Si
SLU 74	14.85	-3218	763	-670.41		6624	1.735	6439	3128			4.1	Si
SLU 83	12.95	-4467	752	247.76		9196	1.735	6782	3295			4.38	Si
SLU 83	14.85	-2908	753	-597.52		5985	1.735	6354	3087			4.1	Si
SLU 36	12.95	-4254	792	117.48		8756	1.735	6723	3266			4.12	Si
SLU 36	14.85	-3315	791	-698.1		6825	1.735	6466	3141			3.97	Si
SLU 35	12.95	-4270	767	98.16		8789	1.735	6727	3268			4.26	Si
SLU 35	14.85	-3309	767	-691.93		6811	1.735	6464	3140			4.09	Si
SLU 84	12.95	-4451	777	267.08		9162	1.735	6777	3292			4.24	Si
SLU 84	14.85	-2914	776	-603.68		5999	1.735	6355	3087			3.98	Si
SLU 78	12.95	-5188	831	111.68		10679	1.735	6979	3391			4.08	Si
SLU 78	14.85	-3745	830	-779.87		7709	1.735	6583	3198			3.85	Si
SLU 77	12.95	-5204	806	92.36		10712	1.735	6984	3393			4.21	Si
SLU 77	14.85	-3738	807	-773.71		7695	1.735	6582	3197			3.96	Si
SLU 33	12.95	-3804	749	200.72		7831	1.735	6600	3206			4.28	Si
SLU 33	14.85	-2795	748	-594.8		5753	1.735	6323	3072			4.11	Si

Verifica a taglio nel piano secondo D.M. 17-01-18 (N.T.C.) §7.8.2.2.2 con rottura per scorrimento in combinazioni sismiche, γM = 2

Comb.	Quota	N	V par	M	σ0	σN	l'	fvd	Vt scorr.	Vt fess.diag.	Vt,lim	c.s.	Verifica
SLV 4	12.95	-3371	2137	1047.79		7209	1.67	9775	4571			2.14	Si
SLV 4	14.85	-2636	267	-1066.4		6778	1.3887	9689	3767			14.1	Si
SLV 5	12.95	-1200	1020	1147.14		0	0	8333	0			0	No, Vu<V
SLV 5	14.85	-1564	1820	-138.3		3219	1.735	8977	4361			2.4	Si
SLV 13	12.95	-3044	-1366	-790.61		6265	1.735	9586	4657			3.41	Si
SLV 13	14.85	-921	505	347.69		2237	1.4694	8781	3613			7.15	Si
SLV 9	12.95	-1441	-49	472.96		3181	1.6181	8970	4064			83.06	Si
SLV 9	14.85	-1127	1648	214.4		2320	1.735	8797	4274			2.59	Si
SLV 6	12.95	-1200	1020	1147.14		0	0	8333	0			0	No, Vu<V
SLV 6	14.85	-1564	1820	-138.3		3219	1.735	8977	4361			2.4	Si
SLV 2	12.95	-2239	2197	1456.66		12290	0.6506	10791	1966			0.89	No, Vu<V
SLV 2	14.85	-2376	1076	-827.96		5450	1.5572	9423	4109			3.82	Si
SLV 10	12.95	-1441	-49	472.96		3181	1.6181	8970	4064			83.06	Si
SLV 10	14.85	-1127	1648	214.4		2320	1.735	8797	4274			2.59	Si
SLV 3	12.95	-3371	2137	1047.79		7209	1.67	9775	4571			2.14	Si
SLV 3	14.85	-2636	267	-1066.4		6778	1.3887	9689	3767			14.1	Si
SLV 14	12.95	-3044	-1366	-790.61		6265	1.735	9586	4657			3.41	Si
SLV 14	14.85	-921	505	347.69		2237	1.4694	8781	3613			7.15	Si
SLV 1	12.95	-2239	2197	1456.66		12290	0.6506	10791	1966			0.89	No, Vu<V
SLV 1	14.85	-2376	1076	-827.96		5450	1.5572	9423	4109			3.82	Si

Verifica a pressoflessione fuori piano D.M. 17-01-18 (N.T.C.)

quota 13.6 Wa 0.05 denominatore 8 γM = 2

Comb.	fd	Sa	σ0	N	M	Mc	Coeff.s.	Verifica
SLV 10	143750	0.53	3684	-1790	189.1	243.02	1.29	Si
SLV 9	143750	0.53	3684	-1790	189.1	243.02	1.29	Si

Comb.	fd	Sa	σ0	N	M	Mc	Coeff.s.	Verifica
SLV 6	143750	0.53	3800	-1846	189.1	250.43	1.32	Si
SLV 5	143750	0.53	3800	-1846	189.1	250.43	1.32	Si
SLV 13	143750	0.53	4713	-2289	189.1	308.15	1.63	Si
SLV 14	143750	0.53	4713	-2289	189.1	308.15	1.63	Si
SLV 1	143750	0.53	5099	-2477	189.1	332.32	1.76	Si
SLV 2	143750	0.53	5099	-2477	189.1	332.32	1.76	Si
SLV 15	143750	0.53	5710	-2774	189.1	370.19	1.96	Si
SLV 16	143750	0.53	5710	-2774	189.1	370.19	1.96	Si

Verifica dei meccanismi locali di collasso con analisi cinematica lineare

forza di aggancio al piano = 0 quota mezzeria = 13.6 Wa = 0.05 Ta = 0.0573

Comb.	N top	N base	V orto	α0	M*	e*	a0*	aLim	Verifica
SLV 1	-1386	-4393	-18	0.061	371.2	0.889	0.99353	9.07197	No
SLV 2	-1386	-4393	-18	0.061	371.2	0.889	0.99353	9.07197	No
SLV 16	-1006	-3328	20	0.063	337.6	0.891	1.0223	9.07197	No
SLV 15	-1006	-3328	20	0.063	337.6	0.891	1.0223	9.07197	No
SLV 11	-1349	-5177	28	0.058	367.9	0.889	0.94179	8.24559	No
SLV 12	-1349	-5177	28	0.058	367.9	0.889	0.94179	8.24559	No
SLV 3	-1524	-5367	-5	0.065	383.9	0.889	1.05993	9.07197	No
SLV 4	-1524	-5367	-5	0.065	383.9	0.889	1.05993	9.07197	No
SLV 8	-1505	-5789	20	0.059	382.1	0.889	0.9722	8.24559	No
SLV 7	-1505	-5789	20	0.059	382.1	0.889	0.9722	8.24559	No

Tabella dei coefficienti di sicurezza minimi

Stato limite	Coeff.s.	Comb.	Verifica
PF_SLU	3.772	SLU 78	Si
V_SLU	3.854	SLU 78	Si
PF_SLV	0	SLV 5	No
V_SLV	0	SLV 5	No
PFFP_SLV	1.285	SLV 9	Si
R_SLV	0.11	SLV 1	No

Maschio 216

Verifiche condotte secondo D.M. 17-01-18 (N.T.C.)

Dati geometrici

X ini.	Y ini.	X fin.	Y fin.	Quota i.	Quota.s	l	Sp.	h netta	h ini.	h fin.	a	a.s.,sx	a.s.,dx
-19.663	5.937	-21.878	5.937	L6	L7	2.215	0.28	3.1	3.1	3.1			

Caratteristiche del materiale

(Circolare 7 21-01-19 C8.5.I) Muratura in mattoni pieni e malta di calce LC2_Corti

fb	fk	fvk0	fmedio	τ0	fv0	μ	ϕ	fv,lim	E	G	FC
600000			345000	9000	20000	0.58	0.77	32500	320000000	128000000	1.2

Verifica a pressoflessione nel piano secondo D.M. 17-01-18 NTC §7.8.2.2.1 in combinazioni non sismiche, γM = 3

Comb.	Quota	N	M	σ0	Mu	c.s.	Verifica
SLU 51	12.95	-6776	-206.72	10926	6496.78	31.428	Si
SLU 51	14.85	-3169	722.14	5110	3289.02	4.555	Si
SLU 49	12.95	-7097	-133.74	11444	6754.67	50.506	Si
SLU 49	14.85	-3577	811.86	5768	3680.72	4.534	Si
SLU 50	12.95	-6770	-232.89	10918	6492.49	27.879	Si
SLU 50	14.85	-3167	735.23	5107	3286.9	4.471	Si
SLU 48	12.95	-7091	-159.9	11436	6750.45	42.215	Si
SLU 48	14.85	-3575	824.96	5765	3678.64	4.459	Si
SLU 69	12.95	-7389	-209.44	11916	6985.59	33.353	Si
SLU 69	14.85	-3826	846.34	6170	3916.15	4.627	Si
SLU 6	12.95	-5911	-146.64	9532	5779.71	39.415	Si
SLU 6	14.85	-3151	731.04	5081	3271.25	4.475	Si
SLU 7	12.95	-5916	-120.47	9541	5784.2	48.012	Si
SLU 7	14.85	-3153	717.94	5084	3273.36	4.559	Si
SLU 9	12.95	-5595	-193.45	9023	5509.7	28.481	Si
SLU 9	14.85	-2745	628.21	4426	2874.07	4.575	Si
SLU 71	12.95	-7068	-282.42	11398	6731.82	23.836	Si
SLU 71	14.85	-3418	756.61	5512	3528.91	4.664	Si
SLU 8	12.95	-5590	-219.62	9014	5505.14	25.067	Si
SLU 8	14.85	-2742	641.31	4422	2871.91	4.478	Si

Verifica a pressoflessione nel piano secondo D.M. 17-01-18 NTC §7.8.2.2.1 in combinazioni sismiche, γM = 2

Comb.	Quota	N	M	σ0	Mu	c.s.	Verifica
SLV 6	12.95	-1139	-81.97	1837	1242.38	15.156	Si
SLV 6	14.85	-1007	1226.64	0	0	0	No, e>l/2
SLV 3	12.95	-7736	496.75	12475	7691.82	15.484	Si
SLV 3	14.85	-985	-1067.12	1589	1076.89	1.009	Si
SLV 7	12.95	-8886	172.56	14330	8686.44	50.339	Si
SLV 7	14.85	-1979	-1191.42	3191	2133.8	1.791	Si
SLV 4	12.95	-7736	496.75	12475	7691.82	15.484	Si
SLV 4	14.85	-985	-1067.12	1589	1076.89	1.009	Si
SLV 13	12.95	-952	-760.4	1535	1040.6	1.368	Si
SLV 13	14.85	-2560	1721.21	4128	2739.17	1.591	Si
SLV 8	12.95	-8886	172.56	14330	8686.44	50.339	Si
SLV 8	14.85	-1979	-1191.42	3191	2133.8	1.791	Si
SLV 10	12.95	199	-436.21	0	0	0	No, Trazione
SLV 10	14.85	-1567	1845.51	0	0	0	No, e>l/2
SLV 5	12.95	-1139	-81.97	1837	1242.38	15.156	Si
SLV 5	14.85	-1007	1226.64	0	0	0	No, e>l/2

Comb.	Quota	N	M	σ0	Mu	c.s.	Verifica
SLV 9	12.95	199	-436.21	0	0	0	No, Trazione
SLV 9	14.85	-1567	1845.51	0	0	0	No, e>l/2
SLV 14	12.95	-952	-760.4	1535	1040.6	1.368	Si
SLV 14	14.85	-2560	1721.21	4128	2739.17	1.591	Si

Verifica a taglio nel piano secondo D.M. 17-01-18 (N.T.C.) §7.8.2.2.2 con rottura per scorrimento in combinazioni non sismiche, γM = 3

Comb.	Quota	N	V par	M	σ0	σN	l'	fvd	Vt scorr.	Vt fess.diag.	Vt,lim	c.s.	Verifica
SLU 77	12.95	-7332	-59	-268.35		11823	2.2147	7132	4423			74.67	Si
SLU 77	14.85	-3823	-167	788.31		6165	2.2147	6378	3955			23.74	Si
SLU 78	12.95	-7337	-37	-242.19		11831	2.2147	7133	4423			118.59	Si
SLU 78	14.85	-3825	-144	775.21		6168	2.2147	6378	3955			27.43	Si
SLU 36	12.95	-6157	-63	-228.92		9928	2.2147	6879	4266			68.2	Si
SLU 36	14.85	-3401	-158	681.29		5484	2.2147	6287	3899			24.66	Si
SLU 33	12.95	-5499	-54	-169.53		8868	2.2147	6738	4178			77.09	Si
SLU 33	14.85	-2880	-134	529.39		4645	2.2147	6175	3829			28.64	Si
SLU 14	12.95	-5854	-61	-205.55		9439	2.2147	6814	4226			69.81	Si
SLU 14	14.85	-3147	-147	673.01		5075	2.2147	6232	3865			26.35	Si
SLU 35	12.95	-6151	-84	-255.09		9919	2.2147	6878	4265			50.49	Si
SLU 35	14.85	-3398	-180	694.39		5480	2.2147	6286	3898			21.6	Si
SLU 74	12.95	-6674	-51	-208.96		10763	2.2147	6991	4335			85.2	Si
SLU 74	14.85	-3303	-142	636.41		5326	2.2147	6266	3885			27.33	Si
SLU 56	12.95	-7034	-35	-218.82		11343	2.2147	7068	4383			124.24	Si
SLU 56	14.85	-3572	-133	766.93		5759	2.2147	6323	3921			29.54	Si
SLU 32	12.95	-5494	-76	-195.7		8859	2.2147	6737	4178			54.88	Si
SLU 32	14.85	-2878	-156	542.49		4641	2.2147	6174	3829			24.53	Si
SLU 27	12.95	-6209	-50	-196.18		10012	2.2147	6890	4273			85.54	Si
SLU 27	14.85	-3402	-140	752.42		5486	2.2147	6287	3899			27.84	Si

Verifica a taglio nel piano secondo D.M. 17-01-18 (N.T.C.) §7.8.2.2.2 con rottura per scorrimento in combinazioni sismiche, γM = 2

Comb.	Quota	N	V par	M	σ0	σN	l'	fvd	Vt scorr.	Vt fess.diag.	Vt,lim	c.s.	Verifica
SLV 6	12.95	-1139	-1873	-81.97		1837	2.2147	8701	5396			2.88	Si
SLV 6	14.85	-1007	-2388	1226.64		0	0	8333	0			0	No, Vu<V
SLV 5	12.95	-1139	-1873	-81.97		1837	2.2147	8701	5396			2.88	Si
SLV 5	14.85	-1007	-2388	1226.64		0	0	8333	0			0	No, Vu<V
SLV 13	12.95	-952	-3601	-760.4		3674	0.925	9068	2349			0.65	No, Vu<V
SLV 13	14.85	-2560	-1755	1721.21		7006	1.3051	9734	3557			2.03	Si
SLV 14	12.95	-952	-3601	-760.4		3674	0.925	9068	2349			0.65	No, Vu<V
SLV 14	14.85	-2560	-1755	1721.21		7006	1.3051	9734	3557			2.03	Si
SLV 7	12.95	-8886	3642	172.56		14330	2.2147	11199	6945			1.91	Si
SLV 7	14.85	-1979	2927	-1191.42		4662	1.5156	9266	3932			1.34	Si
SLV 9	12.95	199	-3562	-436.21		0	0	8333	0			0	No, Vu<V
SLV 9	14.85	-1567	-2954	1845.51		0	0	8333	0			0	No, Vu<V
SLV 10	12.95	199	-3562	-436.21		0	0	8333	0			0	No, Vu<V
SLV 10	14.85	-1567	-2954	1845.51		0	0	8333	0			0	No, Vu<V
SLV 8	12.95	-8886	3642	172.56		14330	2.2147	11199	6945			1.91	Si
SLV 8	14.85	-1979	2927	-1191.42		4662	1.5156	9266	3932			1.34	Si
SLV 4	12.95	-7736	3681	496.75		12475	2.2147	10828	6715			1.82	Si
SLV 4	14.85	-985	1728	-1067.12		48225	0.073	16250	332			0.19	No, Vu<V
SLV 3	12.95	-7736	3681	496.75		12475	2.2147	10828	6715			1.82	Si
SLV 3	14.85	-985	1728	-1067.12		48225	0.073	16250	332			0.19	No, Vu<V

Verifica a pressoflessione fuori piano D.M. 17-01-18 (N.T.C.)

quota 13.6 Wa 0.05 denominatore 8 γM = 2

Comb.	fd	Sa	σ0	N	M	Mc	Coeff.s.	Verifica
SLV 14	143750	0.53	0	-787	241.39	0	0	No, e>t/2
SLV 10	143750	0.53	0	57	241.39	0	0	No, Trazione
SLV 13	143750	0.53	0	-787	241.39	0	0	No, e>t/2
SLV 5	143750	0.53	0	-1063	241.39	0	0	No, e>t/2
SLV 6	143750	0.53	0	-1063	241.39	0	0	No, e>t/2
SLV 9	143750	0.53	0	57	241.39	0	0	No, Trazione
SLV 16	143750	0.53	4242	-2631	241.39	355.52	1.47	Si
SLV 15	143750	0.53	4242	-2631	241.39	355.52	1.47	Si
SLV 1	143750	0.53	7290	-4520	241.39	595.11	2.47	Si
SLV 2	143750	0.53	7290	-4520	241.39	595.11	2.47	Si

Verifica dei meccanismi locali di collasso con analisi cinematica lineare

forza di aggancio al piano = 0 quota mezzeria = 13.6 Wa = 0.05 Ta = 0.0573

Comb.	N top	N base	V orto	α0	M*	e*	a0*	aLim	Verifica
SLV 4	-1133	-7304	72	0.047	418.2	0.893	0.76924	9.07197	No
SLV 3	-1133	-7304	72	0.047	418.2	0.893	0.76924	9.07197	No
SLV 14	-1111	-2388	-71	0.048	416.4	0.894	0.77399	9.07197	No
SLV 13	-1111	-2388	-71	0.048	416.4	0.894	0.77399	9.07197	No
SLV 15	-1613	-4463	-64	0.049	459.8	0.889	0.8073	9.07197	No
SLV 16	-1613	-4463	-64	0.049	459.8	0.889	0.8073	9.07197	No
SLV 2	-631	-5228	65	0.051	379.8	0.911	0.81028	9.07197	No
SLV 1	-631	-5228	65	0.051	379.8	0.911	0.81028	9.07197	No
SLV 8	-1887	-8731	33	0.058	484.6	0.889	0.94285	8.24559	No
SLV 7	-1887	-8731	33	0.058	484.6	0.889	0.94285	8.24559	No

Tabella dei coefficienti di sicurezza minimi

Stato limite	Coeff.s.	Comb.	Verifica
PF_SLU	4.459	SLU 48	Si
V_SLU	21.597	SLU 35	Si
PF_SLV	0	SLV 10	No
V_SLV	0	SLV 5	No
PFFP_SLV	0	SLV 10	No
R_SLV	0.085	SLV 3	No

Maschio 217

Verifiche condotte secondo D.M. 17-01-18 (N.T.C.)

Dati geometrici

X ini.	Y ini.	X fin.	Y fin.	Quota i.	Quota.s	l	Sp.	h netta	h ini.	h fin.	a	a.s.,sx	a.s.,dx
-22.517	-3.183	-24.613	-3.183	L6	L7	2.095	0.28	3.1	3.1	3.1			

Caratteristiche del materiale

(Circolare 7 21-01-19 C8.5.I) Muratura in mattoni pieni e malta di calce LC2_Corti

fb	fk	fvk0	fmedio	τ0	fv0	μ	ϕ	fv,lim	E	G	FC
600000			345000	9000	20000	0.58	0.77	32500	320000000	128000000	1.2

Verifica a pressoflessione nel piano secondo D.M. 17-01-18 NTC §7.8.2.2.1 in combinazioni non sismiche, γM = 3

Comb.	Quota	N	M	σ0	Mu	c.s.	Verifica
SLU 19	12.95	-3270	518.67	5573	3191.24	6.153	Si
SLU 19	14.85	-1265	-335.64	2155	1289.74	3.843	Si
SLU 39	12.95	-3277	670.58	5585	3197.6	4.768	Si
SLU 39	14.85	-1382	-362.64	2355	1405.81	3.877	Si
SLU 34	12.95	-3426	501.17	5839	3331.89	6.648	Si
SLU 34	14.85	-1312	-356.68	2236	1336.82	3.748	Si
SLU 40	12.95	-3299	653.25	5623	3217.51	4.925	Si
SLU 40	14.85	-1354	-374.31	2308	1378.15	3.682	Si
SLU 82	12.95	-4318	679.73	7361	4115.35	6.054	Si
SLU 82	14.85	-1701	-445	2900	1718.76	3.862	Si
SLU 42	12.95	-3356	600.91	5720	3269.11	5.44	Si
SLU 42	14.85	-1341	-362.15	2285	1365.02	3.769	Si
SLU 33	12.95	-3735	469.4	6367	3607.47	7.685	Si
SLU 33	14.85	-1753	-456.72	2988	1769.29	3.874	Si
SLU 10	12.95	-3340	418.94	5692	3254.28	7.768	Si
SLU 10	14.85	-1236	-330.17	2107	1261.44	3.821	Si
SLU 31	12.95	-3369	553.52	5742	3280.46	5.927	Si
SLU 31	14.85	-1325	-368.85	2259	1349.97	3.66	Si
SLU 73	12.95	-4388	579.99	7480	4175.18	7.199	Si
SLU 73	14.85	-1673	-439.53	2851	1691.01	3.847	Si

Verifica a pressoflessione nel piano secondo D.M. 17-01-18 NTC §7.8.2.2.1 in combinazioni sismiche, γM = 2

Comb.	Quota	N	M	σ0	Mu	c.s.	Verifica
SLV 1	12.95	-3669	819.54	6253	3646.83	4.45	Si
SLV 1	14.85	-1686	-708.11	2874	1724.96	2.436	Si
SLV 11	12.95	-2081	858.75	3547	2117.08	2.465	Si
SLV 11	14.85	-1333	-374.36	2272	1370.58	3.661	Si
SLV 2	12.95	-3669	819.54	6253	3646.83	4.45	Si
SLV 2	14.85	-1686	-708.11	2874	1724.96	2.436	Si
SLV 4	12.95	-2850	1257.04	4857	2866.78	2.281	Si
SLV 4	14.85	-1791	-838.12	3053	1829.8	2.183	Si
SLV 7	12.95	-1995	1278.15	3400	2031.77	1.59	Si
SLV 7	14.85	-1601	-658.41	2729	1640.01	2.491	Si
SLV 8	12.95	-1995	1278.15	3400	2031.77	1.59	Si
SLV 8	14.85	-1601	-658.41	2729	1640.01	2.491	Si
SLV 14	12.95	-3957	-578.46	6744	3916.3	6.77	Si
SLV 14	14.85	-792	238.73	1350	820.89	3.439	Si
SLV 12	12.95	-2081	858.75	3547	2117.08	2.465	Si
SLV 12	14.85	-1333	-374.36	2272	1370.58	3.661	Si
SLV 13	12.95	-3957	-578.46	6744	3916.3	6.77	Si
SLV 13	14.85	-792	238.73	1350	820.89	3.439	Si
SLV 3	12.95	-2850	1257.04	4857	2866.78	2.281	Si
SLV 3	14.85	-1791	-838.12	3053	1829.8	2.183	Si

Verifica a taglio nel piano secondo D.M. 17-01-18 (N.T.C.) §7.8.2.2.2 con rottura per scorrimento in combinazioni non sismiche, γM = 3

Comb.	Quota	N	V par	M	σ0	σN	l'	fvd	Vt scorr.	Vt fess.diag.	Vt,lim	c.s.	Verifica
SLU 83	12.95	-4354	593	644.7		7421	2.0953	6545	3840			6.48	Si
SLU 83	14.85	-1716	593	-421.17		2925	2.0953	5946	3488			5.88	Si
SLU 81	12.95	-4296	665	697.05		7323	2.0953	6532	3832			5.76	Si
SLU 81	14.85	-1729	666	-433.33		2947	2.0953	5949	3490			5.24	Si
SLU 82	12.95	-4318	649	679.73		7361	2.0953	6537	3835			5.91	Si
SLU 82	14.85	-1701	615	-445		2900	2.0953	5942	3486			5.67	Si
SLU 32	12.95	-3713	577	486.72		6329	2.0953	6399	3754			6.51	Si
SLU 32	14.85	-1781	577	-445.05		3036	2.0953	5960	3497			6.06	Si
SLU 74	12.95	-4733	592	513.19		8067	2.0953	6631	3890			6.58	Si
SLU 74	14.85	-2128	592	-515.73		3628	2.0953	6039	3543			5.98	Si
SLU 39	12.95	-3277	651	670.58		5585	2.0953	6300	3696			5.68	Si
SLU 39	14.85	-1382	651	-362.64		2355	2.0953	5870	3444			5.29	Si
SLU 84	12.95	-4376	576	627.38		7458	2.0953	6550	3843			6.67	Si
SLU 84	14.85	-1688	542	-432.83		2877	2.0953	5939	3484			6.43	Si
SLU 42	12.95	-3356	562	600.91		5720	2.0953	6318	3707			6.6	Si
SLU 42	14.85	-1341	527	-362.15		2285	2.0953	5860	3438			6.52	Si
SLU 40	12.95	-3299	634	653.25		5623	2.0953	6305	3699			5.83	Si
SLU 40	14.85	-1354	600	-374.31		2308	2.0953	5863	3440			5.73	Si
SLU 41	12.95	-3334	578	618.23		5683	2.0953	6313	3704			6.41	Si
SLU 41	14.85	-1369	578	-350.48		2333	2.0953	5867	3442			5.95	Si

Verifica a taglio nel piano secondo D.M. 17-01-18 (N.T.C.) §7.8.2.2.2 con rottura per scorrimento in combinazioni sismiche, γM = 2

Comb.	Quota	N	V par	M	σ0	σN	l'	fvd	Vt scorr.	Vt fess.diag.	Vt,lim	c.s.	Verifica
SLV 12	12.95	-2081	1235	858.75		3902	1.9051	9114	4861			3.94	Si
SLV 12	14.85	-1333	1678	-374.36		2272	2.0953	8788	5156			3.07	Si
SLV 4	12.95	-2850	1967	1257.04		5593	1.8196	9452	4816			2.45	Si
SLV 4	14.85	-1791	938	-838.12		3678	1.7393	9069	4417			4.71	Si
SLV 3	12.95	-2850	1967	1257.04		5593	1.8196	9452	4816			2.45	Si

Comb.	Quota	N	V par	M	σ0	σN	l'	fvd	Vt scorr.	Vt fess.diag.	Vt,lim	c.s.	Verifica
SLV 3	14.85	-1791	938	-838.12		3678	1.7393	9069	4417			4.71	Si
SLV 14	12.95	-3957	-1344	-578.46		6744	2.0953	9682	5680			4.23	Si
SLV 14	14.85	-792	-314	238.73		1350	2.0953	8603	5048			16.06	Si
SLV 10	12.95	-4811	-1371	-599.57		8201	2.0953	9973	5851			4.27	Si
SLV 10	14.85	-982	-1174	59.02		1675	2.0953	8668	5086			4.33	Si
SLV 9	12.95	-4811	-1371	-599.57		8201	2.0953	9973	5851			4.27	Si
SLV 9	14.85	-982	-1174	59.02		1675	2.0953	8668	5086			4.33	Si
SLV 8	12.95	-1995	1993	1278.15		5836	1.2208	9501	3248			1.63	Si
SLV 8	14.85	-1601	1797	-658.41		2995	1.9094	8932	4775			2.66	Si
SLV 13	12.95	-3957	-1344	-578.46		6744	2.0953	9682	5680			4.23	Si
SLV 13	14.85	-792	-314	238.73		1350	2.0953	8603	5048			16.06	Si
SLV 7	12.95	-1995	1993	1278.15		5836	1.2208	9501	3248			1.63	Si
SLV 7	14.85	-1601	1797	-658.41		2995	1.9094	8932	4775			2.66	Si
SLV 11	12.95	-2081	1235	858.75		3902	1.9051	9114	4861			3.94	Si
SLV 11	14.85	-1333	1678	-374.36		2272	2.0953	8788	5156			3.07	Si

Verifica a pressoflessione fuori piano D.M. 17-01-18 (N.T.C.)

quota 13.6 Wa 0.05 denominatore 8 γM = 2

Comb.	fd	Sa	σ0	N	M	Mc	Coeff.s.	Verifica
SLV 12	143750	0.53	3111	-1825	228.37	248.99	1.09	Si
SLV 11	143750	0.53	3111	-1825	228.37	248.99	1.09	Si
SLV 7	143750	0.53	3187	-1870	228.37	254.95	1.12	Si
SLV 8	143750	0.53	3187	-1870	228.37	254.95	1.12	Si
SLV 16	143750	0.53	3843	-2255	228.37	305.76	1.34	Si
SLV 15	143750	0.53	3843	-2255	228.37	305.76	1.34	Si
SLV 4	143750	0.53	4098	-2405	228.37	325.34	1.42	Si
SLV 3	143750	0.53	4098	-2405	228.37	325.34	1.42	Si
SLV 13	143750	0.53	4548	-2668	228.37	359.66	1.57	Si
SLV 14	143750	0.53	4548	-2668	228.37	359.66	1.57	Si

Verifica dei meccanismi locali di collasso con analisi cinematica lineare

forza di aggancio al piano = 0 quota mezzeria = 13.6 Wa = 0.05 Ta = 0.0573

Comb.	N top	N base	V orto	α0	M*	e*	a0*	aLim	Verifica
SLV 6	-862	-6157	-50	0.055	378.8	0.898	0.88374	8.24559	No
SLV 5	-862	-6157	-50	0.055	378.8	0.898	0.88374	8.24559	No
SLV 9	-772	-5641	-50	0.055	371.9	0.902	0.88794	8.24559	No
SLV 10	-772	-5641	-50	0.055	371.9	0.902	0.88794	8.24559	No
SLV 11	-544	-2722	50	0.056	355.8	0.914	0.89186	8.24559	No
SLV 12	-544	-2722	50	0.056	355.8	0.914	0.89186	8.24559	No
SLV 8	-634	-3237	50	0.056	361.9	0.909	0.89249	8.24559	No
SLV 7	-634	-3237	50	0.056	361.9	0.909	0.89249	8.24559	No
SLV 2	-887	-5737	-16	0.068	380.7	0.898	1.10562	9.07197	No
SLV 1	-887	-5737	-16	0.068	380.7	0.898	1.10562	9.07197	No

Tabella dei coefficienti di sicurezza minimi

Stato limite	Coeff.s.	Comb.	Verifica
PF_SLU	3.66	SLU 31	Si
V_SLU	5.241	SLU 81	Si
PF_SLV	1.59	SLV 7	Si
V_SLV	1.629	SLV 7	Si
PFFP_SLV	1.09	SLV 11	Si
R_SLV	0.107	SLV 5	No

Maschio 218

Verifiche condotte secondo D.M. 17-01-18 (N.T.C.)

Dati geometrici

X ini.	Y ini.	X fin.	Y fin.	Quota i.	Quota.s	l	Sp.	h netta	h ini.	h fin.	a	a.s.,sx	a.s.,dx
-19.287	-3.183	-21.517	-3.183	L6	L7	2.23	0.28	3.1	3.1	3.1			

Caratteristiche del materiale

(Circolare 7 21-01-19 C8.5.I) Muratura in mattoni pieni e malta di calce LC2_Corti

fb	fk	fvk0	fmedio	τ0	fv0	μ	ϕ	fv,lim	E	G	FC
600000			345000	9000	20000	0.58	0.77	32500	320000000	128000000	1.2

Verifica a pressoflessione nel piano secondo D.M. 17-01-18 NTC §7.8.2.2.1 in combinazioni non sismiche, γM = 3

Comb.	Quota	N	M	σ0	Mu	c.s.	Verifica
SLU 41	14.05	-2148	-297.61	3440	2293.67	7.707	Si
SLU 41	14.85	-1272	-23.52	2037	1382.65	58.794	Si
SLU 40	14.05	-2155	-299.51	3451	2300.55	7.681	Si
SLU 40	14.85	-1279	-46.52	2048	1389.79	29.877	Si
SLU 39	14.05	-2149	-288.25	3442	2295	7.962	Si
SLU 39	14.85	-1273	-60.08	2039	1384.02	23.037	Si
SLU 21	14.05	-2074	-259.3	3321	2217.81	8.553	Si
SLU 21	14.85	-1212	20.3	1941	1319.3	64.995	Si
SLU 34	14.05	-2173	-299.56	3480	2319.42	7.743	Si
SLU 34	14.85	-1297	25.1	2077	1409.37	56.161	Si
SLU 37	14.05	-2163	-290.16	3464	2308.85	7.957	Si
SLU 37	14.85	-1287	39.05	2061	1398.4	35.807	Si
SLU 42	14.05	-2153	-308.87	3448	2299.22	7.444	Si
SLU 42	14.85	-1277	-9.96	2046	1388.41	139.459	Si
SLU 84	14.05	-2763	-346.66	4425	2913.34	8.404	Si
SLU 84	14.85	-1634	17.48	2616	1762.87	100.848	Si
SLU 31	14.05	-2174	-290.2	3482	2320.75	7.997	Si
SLU 31	14.85	-1298	-11.47	2079	1410.75	123.046	Si

Comb.	Quota	N	M	σ0	Mu	c.s.	Verifica
SLU 38	14.05	-2168	-301.42	3472	2314.4	7.678	Si
SLU 38	14.85	-1292	52.62	2069	1404.16	26.687	Si

Verifica a pressoflessione nel piano secondo D.M. 17-01-18 NTC §7.8.2.2.1 in combinazioni sismiche, γM = 2

Comb.	Quota	N	M	σ0	Mu	c.s.	Verifica
SLV 3	14.05	-1907	600.13	3054	2072.74	3.454	Si
SLV 3	14.85	-775	-385.99	1241	855.22	2.216	Si
SLV 10	14.05	-2351	-813.8	3764	2540.07	3.121	Si
SLV 10	14.85	-2000	100.54	3204	2171.88	21.603	Si
SLV 1	14.05	-2003	360.55	3208	2174.95	6.032	Si
SLV 1	14.85	-1159	-422.53	1856	1272.33	3.011	Si
SLV 16	14.05	-2267	-776.55	3631	2453.1	3.159	Si
SLV 16	14.85	-1381	484.31	2211	1511.69	3.121	Si
SLV 2	14.05	-2003	360.55	3208	2174.95	6.032	Si
SLV 2	14.85	-1159	-422.53	1856	1272.33	3.011	Si
SLV 14	14.05	-2364	-1016.13	3786	2554.29	2.514	Si
SLV 14	14.85	-1765	447.77	2826	1922.01	4.292	Si
SLV 9	14.05	-2351	-813.8	3764	2540.07	3.121	Si
SLV 9	14.85	-2000	100.54	3204	2171.88	21.603	Si
SLV 4	14.05	-1907	600.13	3054	2072.74	3.454	Si
SLV 4	14.85	-775	-385.99	1241	855.22	2.216	Si
SLV 13	14.05	-2364	-1016.13	3786	2554.29	2.514	Si
SLV 13	14.85	-1765	447.77	2826	1922.01	4.292	Si
SLV 15	14.05	-2267	-776.55	3631	2453.1	3.159	Si
SLV 15	14.85	-1381	484.31	2211	1511.69	3.121	Si

Verifica a taglio nel piano secondo D.M. 17-01-18 (N.T.C.) §7.8.2.2.2 con rottura per scorrimento in combinazioni non sismiche, γM = 3

Comb.	Quota	N	V par	M	σ0	σN	l'	fvd	Vt scorr.	Vt fess.diag.	Vt,lim	c.s.	Verifica
SLU 78	14.05	-3282	-568	-334.69		5257	2.23	6256	3907			6.88	Si
SLU 78	14.85	-2153	-568	125.65		3448	2.23	6015	3756			6.61	Si
SLU 48	14.05	-3235	-538	-234.62		5181	2.23	6246	3900			7.25	Si
SLU 48	14.85	-2120	-538	203.03		3395	2.23	6008	3752			6.97	Si
SLU 49	14.05	-3240	-569	-245.88		5190	2.23	6247	3901			6.86	Si
SLU 49	14.85	-2125	-569	216.6		3404	2.23	6009	3752			6.6	Si
SLU 77	14.05	-3277	-537	-323.43		5248	2.23	6255	3906			7.27	Si
SLU 77	14.85	-2147	-537	112.09		3439	2.23	6014	3755			6.99	Si
SLU 70	14.05	-3320	-595	-295.45		5317	2.23	6265	3912			6.58	Si
SLU 70	14.85	-2191	-595	186.34		3508	2.23	6023	3761			6.32	Si
SLU 67	14.05	-3321	-537	-286.09		5319	2.23	6265	3912			7.28	Si
SLU 67	14.85	-2192	-537	149.78		3510	2.23	6024	3761			7	Si
SLU 57	14.05	-3203	-542	-285.12		5129	2.23	6239	3896			7.19	Si
SLU 57	14.85	-2088	-542	155.91		3343	2.23	6001	3747			6.91	Si
SLU 69	14.05	-3315	-564	-284.19		5308	2.23	6263	3911			6.94	Si
SLU 69	14.85	-2185	-564	172.78		3500	2.23	6022	3760			6.67	Si
SLU 51	14.05	-2736	-518	-250.4		4382	2.23	6140	3834			7.41	Si
SLU 51	14.85	-1621	-518	171		2596	2.23	5902	3685			7.12	Si
SLU 72	14.05	-2816	-544	-299.98		4509	2.23	6157	3844			7.07	Si
SLU 72	14.85	-1686	-544	140.74		2700	2.23	5916	3694			6.8	Si

Verifica a taglio nel piano secondo D.M. 17-01-18 (N.T.C.) §7.8.2.2.2 con rottura per scorrimento in combinazioni sismiche, γM = 2

Comb.	Quota	N	V par	M	σ0	σN	l'	fvd	Vt scorr.	Vt fess.diag.	Vt,lim	c.s.	Verifica
SLV 9	14.05	-2351	-1965	-813.8		3764	2.23	9086	5673			2.89	Si
SLV 9	14.85	-2000	-1524	100.54		3204	2.23	8974	5603			3.68	Si
SLV 7	14.05	-1920	1379	397.8		3075	2.23	8948	5587			4.05	Si
SLV 7	14.85	-539	939	-38.75		863	2.23	8506	5311			5.65	Si
SLV 10	14.05	-2351	-1965	-813.8		3764	2.23	9086	5673			2.89	Si
SLV 10	14.85	-2000	-1524	100.54		3204	2.23	8974	5603			3.68	Si
SLV 14	14.05	-2364	-2279	-1016.13		4108	2.0556	9155	5269			2.31	Si
SLV 14	14.85	-1765	-1371	447.77		2826	2.23	8899	5556			4.05	Si
SLV 3	14.05	-1907	1694	600.13		3054	2.23	8944	5585			3.3	Si
SLV 3	14.85	-775	786	-385.99		1495	1.8506	8632	4473			5.69	Si
SLV 8	14.05	-1920	1379	397.8		3075	2.23	8948	5587			4.05	Si
SLV 8	14.85	-539	939	-38.75		863	2.23	8506	5311			5.65	Si
SLV 4	14.05	-1907	1694	600.13		3054	2.23	8944	5585			3.3	Si
SLV 4	14.85	-775	786	-385.99		1495	1.8506	8632	4473			5.69	Si
SLV 15	14.05	-2267	-1569	-776.55		3631	2.23	9060	5657			3.6	Si
SLV 15	14.85	-1381	-772	484.31		2211	2.23	8776	5479			7.09	Si
SLV 16	14.05	-2267	-1569	-776.55		3631	2.23	9060	5657			3.6	Si
SLV 16	14.85	-1381	-772	484.31		2211	2.23	8776	5479			7.09	Si
SLV 13	14.05	-2364	-2279	-1016.13		4108	2.0556	9155	5269			2.31	Si
SLV 13	14.85	-1765	-1371	447.77		2826	2.23	8899	5556			4.05	Si

Verifica a pressoflessione fuori piano D.M. 17-01-18 (N.T.C.)

quota 13.6 Wa 0.05 denominatore 8 γM = 2

Comb.	fd	Sa	σ0	N	M	Mc	Coeff.s.	Verifica
SLV 9	143750	0.53	0	-1533	243.05	0	0	No, e>t/2
SLV 10	143750	0.53	0	-1533	243.05	0	0	No, e>t/2
SLV 15	143750	0.53	0	-1508	243.05	0	0	No, e>t/2
SLV 13	143750	0.53	0	-1263	243.05	0	0	No, e>t/2
SLV 14	143750	0.53	0	-1263	243.05	0	0	No, e>t/2
SLV 16	143750	0.53	0	-1508	243.05	0	0	No, e>t/2
SLV 5	143750	0.53	3220	-2011	243.05	274.09	1.13	Si
SLV 6	143750	0.53	3220	-2011	243.05	274.09	1.13	Si
SLV 12	143750	0.53	3766	-2351	243.05	319.03	1.31	Si
SLV 11	143750	0.53	3766	-2351	243.05	319.03	1.31	Si

Verifica dei meccanismi locali di collasso con analisi cinematica lineare

forza di aggancio al piano = 0 quota mezzeria = 13.6 Wa = 0.05 Ta = 0.0573

Comb.	N top	N base	V orto	α0	M*	e*	a0*	aLim	Verifica

Comb.	N top	N base	V orto	α0	M*	e*	a0*	aLim	Verifica
SLV 7	-812	-2635	58	0.053	395.1	0.902	0.85977	8.24559	No
SLV 8	-812	-2635	58	0.053	395.1	0.902	0.85977	8.24559	No
SLV 10	-662	-4340	-57	0.054	384.3	0.909	0.86268	8.24559	No
SLV 9	-662	-4340	-57	0.054	384.3	0.909	0.86268	8.24559	No
SLV 12	-794	-2553	53	0.055	393.7	0.903	0.89011	8.24559	No
SLV 11	-794	-2553	53	0.055	393.7	0.903	0.89011	8.24559	No
SLV 5	-680	-4422	-53	0.056	385.6	0.908	0.89388	8.24559	No
SLV 6	-680	-4422	-53	0.056	385.6	0.908	0.89388	8.24559	No
SLV 3	-787	-3356	25	0.067	393.2	0.903	1.07089	9.07197	No
SLV 4	-787	-3356	25	0.067	393.2	0.903	1.07089	9.07197	No

Tabella dei coefficienti di sicurezza minimi

Stato limite	Coeff.s.	Comb.	Verifica
PF_SLU	7.444	SLU 42	Si
V_SLU	6.322	SLU 70	Si
PF_SLV	2.216	SLV 3	Si
V_SLV	2.312	SLV 13	Si
PFFP_SLV	0	SLV 9	No
R_SLV	0.104	SLV 7	No

Maschio 219

Verifiche condotte secondo D.M. 17-01-18 (N.T.C.)

Dati geometrici

X ini.	Y ini.	X fin.	Y fin.	Quota i.	Quota.s	l	Sp.	h netta	h ini.	h fin.	a	a.s.,sx	a.s.,dx
-18.277	-3.183	-18.787	-3.183	L6	L7	0.51	0.28	3.1	3.1	3.1			

Caratteristiche del materiale

(Circolare 7 21-01-19 C8.5.I) Muratura in mattoni pieni e malta di calce LC2_Corti

fb	fk	fvk0	fmedio	τ0	fv0	μ	ϕ	fv,lim	E	G	FC
600000			345000	9000	20000	0.58	0.77	32500	320000000	128000000	1.2

Verifica a pressoflessione nel piano secondo D.M. 17-01-18 NTC §7.8.2.2.1 in combinazioni non sismiche, γM = 3

Comb.	Quota	N	M	σ0	Mu	c.s.	Verifica
SLU 19	14.05	-419	-24.32	2937	103.11	4.239	Si
SLU 19	14.85	-277	74.49	0	0	0	No, e>l/2
SLU 26	14.05	-442	-37.4	3093	108.35	2.897	Si
SLU 26	14.85	-292	97.72	0	0	0	No, e>l/2
SLU 40	14.05	-423	-28.88	2965	104.05	3.603	Si
SLU 40	14.85	-288	85.11	0	0	0	No, e>l/2
SLU 13	14.05	-403	-34.89	2820	99.12	2.841	Si
SLU 13	14.85	-256	91.34	0	0	0	No, e>l/2
SLU 34	14.05	-407	-39.44	2848	100.07	2.537	Si
SLU 34	14.85	-267	101.95	0	0	0	No, e>l/2
SLU 42	14.05	-432	-34.62	3026	106.08	3.064	Si
SLU 42	14.85	-308	90.1	0	0	0	No, e>l/2
SLU 23	14.05	-433	-31.66	3033	106.32	3.359	Si
SLU 23	14.85	-272	92.73	0	0	0	No, e>l/2
SLU 31	14.05	-398	-33.7	2787	98.02	2.909	Si
SLU 31	14.85	-246	96.96	0	0	0	No, e>l/2
SLU 21	14.05	-428	-30.07	2998	105.14	3.497	Si
SLU 21	14.85	-297	79.48	0	0	0	No, e>l/2
SLU 38	14.05	-456	-39.49	3191	111.64	2.827	Si
SLU 38	14.85	-339	93.28	0	0	0	No, e>l/2

Verifica a pressoflessione nel piano secondo D.M. 17-01-18 NTC §7.8.2.2.1 in combinazioni sismiche, γM = 2

Comb.	Quota	N	M	σ0	Mu	c.s.	Verifica
SLV 4	14.05	-808	107.35	5660	196.55	1.831	Si
SLV 4	14.85	-836	-328.26	0	0	0	No, e>l/2
SLV 8	14.05	434	-36.59	0	0	0	No, Trazione
SLV 8	14.85	-172	-257.47	0	0	0	No, e>l/2
SLV 3	14.05	-808	107.35	5660	196.55	1.831	Si
SLV 3	14.85	-836	-328.26	0	0	0	No, e>l/2
SLV 10	14.05	-1476	7.09	10339	344.62	48.635	Si
SLV 10	14.85	-604	361.84	0	0	0	No, e>l/2
SLV 11	14.05	812	-121.42	0	0	0	No, Trazione
SLV 11	14.85	166	-67.88	0	0	0	No, Trazione
SLV 7	14.05	434	-36.59	0	0	0	No, Trazione
SLV 7	14.85	-172	-257.47	0	0	0	No, e>l/2
SLV 12	14.05	812	-121.42	0	0	0	No, Trazione
SLV 12	14.85	166	-67.88	0	0	0	No, Trazione
SLV 14	14.05	-234	-136.86	0	0	0	No, e>l/2
SLV 14	14.85	60	432.63	0	0	0	No, Trazione
SLV 13	14.05	-234	-136.86	0	0	0	No, e>l/2
SLV 13	14.85	60	432.63	0	0	0	No, Trazione
SLV 9	14.05	-1476	7.09	10339	344.62	48.635	Si
SLV 9	14.85	-604	361.84	0	0	0	No, e>l/2

Verifica a taglio nel piano secondo D.M. 17-01-18 (N.T.C.) §7.8.2.2.2 con rottura per scorrimento in combinazioni non sismiche, γM = 3

Comb.	Quota	N	V par	M	σ0	σN	l'	fvd	Vt scorr.	Vt fess.diag.	Vt,lim	c.s.	Verifica
SLU 34	14.05	-407	-185	-39.44		3064	0.474	5964	792			4.29	Si
SLU 34	14.85	-267	-184	101.95		0	0	5556	0			0	No, Vu<V
SLU 42	14.05	-432	-165	-34.62		3026	0.51	5959	851			5.15	Si
SLU 42	14.85	-308	-165	90.1		0	0	5556	0			0	No, Vu<V
SLU 31	14.05	-398	-170	-33.7		2787	0.51	5927	846			4.98	Si

Comb.	Quota	N	V par	M	σ0	σN	l'	fvd	Vt scorr.	Vt fess.diag.	Vt,lim	c.s.	Verifica
SLU 31	14.85	-246	-169	96.96		0	0	5556	0			0	No, Vu<V
SLU 38	14.05	-456	-176	-39.49		3222	0.505	5985	846			4.8	Si
SLU 38	14.85	-339	-176	93.28		0	0	5556	0			0	No, Vu<V
SLU 40	14.05	-423	-151	-28.88		2965	0.51	5951	850			5.64	Si
SLU 40	14.85	-288	-150	85.11		0	0	5556	0			0	No, Vu<V
SLU 21	14.05	-428	-145	-30.07		2998	0.51	5955	850			5.85	Si
SLU 21	14.85	-297	-145	79.48		0	0	5556	0			0	No, Vu<V
SLU 23	14.05	-433	-161	-31.66		3033	0.51	5960	851			5.28	Si
SLU 23	14.85	-272	-160	92.73		0	0	5556	0			0	No, Vu<V
SLU 19	14.05	-419	-131	-24.32		2937	0.51	5947	849			6.49	Si
SLU 19	14.85	-277	-130	74.49		0	0	5556	0			0	No, Vu<V
SLU 26	14.05	-442	-176	-37.4		3093	0.51	5968	852			4.85	Si
SLU 26	14.85	-292	-175	97.72		0	0	5556	0			0	No, Vu<V
SLU 13	14.05	-403	-165	-34.89		2847	0.5051	5935	839			5.1	Si
SLU 13	14.85	-256	-164	91.34		0	0	5556	0			0	No, Vu<V

Verifica a taglio nel piano secondo D.M. 17-01-18 (N.T.C.) §7.8.2.2.2 con rottura per scorrimento in combinazioni sismiche, γM = 2

Comb.	Quota	N	V par	M	σ0	σN	l'	fvd	Vt scorr.	Vt fess.diag.	Vt,lim	c.s.	Verifica
SLV 7	14.05	434	561	-36.59		0	0	8333	0			0	No, Vu<V
SLV 7	14.85	-172	416	-257.47		0	0	8333	0			0	No, Vu<V
SLV 13	14.05	-234	-859	-136.86		0	0	8333	0			0	No, Vu<V
SLV 13	14.85	60	-704	432.63		0	0	8333	0			0	No, Vu<V
SLV 11	14.05	812	185	-121.42		0	0	8333	0			0	No, Vu<V
SLV 11	14.85	166	113	-67.88		0	0	8333	0			0	No, Vu<V
SLV 14	14.05	-234	-859	-136.86		0	0	8333	0			0	No, Vu<V
SLV 14	14.85	60	-704	432.63		0	0	8333	0			0	No, Vu<V
SLV 3	14.05	-808	675	107.35		7875	0.3665	9908	1017			1.51	Si
SLV 3	14.85	-836	521	-328.26		0	0	8333	0			0	No, Vu<V
SLV 10	14.05	-1476	-745	7.09		10339	0.51	10401	1485			1.99	Si
SLV 10	14.85	-604	-600	361.84		0	0	8333	0			0	No, Vu<V
SLV 8	14.05	434	561	-36.59		0	0	8333	0			0	No, Vu<V
SLV 8	14.85	-172	416	-257.47		0	0	8333	0			0	No, Vu<V
SLV 12	14.05	812	185	-121.42		0	0	8333	0			0	No, Vu<V
SLV 12	14.85	166	113	-67.88		0	0	8333	0			0	No, Vu<V
SLV 4	14.05	-808	675	107.35		7875	0.3665	9908	1017			1.51	Si
SLV 4	14.85	-836	521	-328.26		0	0	8333	0			0	No, Vu<V
SLV 9	14.05	-1476	-745	7.09		10339	0.51	10401	1485			1.99	Si
SLV 9	14.85	-604	-600	361.84		0	0	8333	0			0	No, Vu<V

Verifica a pressoflessione fuori piano D.M. 17-01-18 (N.T.C.)

quota 13.6 Wa 0.05 denominatore 8 γM = 2

Comb.	fd	Sa	σ0	N	M	Mc	Coeff.s.	Verifica
SLV 3	143750	0.53	0	-71	55.59	0	0	No, e>t/2
SLV 8	143750	0.53	0	278	55.59	0	0	No, Trazione
SLV 11	143750	0.53	0	113	55.59	0	0	No, Trazione
SLV 7	143750	0.53	0	278	55.59	0	0	No, Trazione
SLV 4	143750	0.53	0	-71	55.59	0	0	No, e>t/2
SLV 12	143750	0.53	0	113	55.59	0	0	No, Trazione
SLV 1	143750	0.53	3755	-536	55.59	72.77	1.31	Si
SLV 2	143750	0.53	3755	-536	55.59	72.77	1.31	Si
SLV 16	143750	0.53	4351	-621	55.59	83.89	1.51	Si
SLV 15	143750	0.53	4351	-621	55.59	83.89	1.51	Si

Verifica dei meccanismi locali di collasso con analisi cinematica lineare

forza di aggancio al piano = 0 quota mezzeria = 13.6 Wa = 0.05 Ta = 0.0573

Comb.	N top	N base	V orto	α0	M*	e*	a0*	aLim	Verifica
SLV 15	71	-387	3	0	0	0	0	9.07197	No, Trazione
SLV 14	30	-435	10	0	0	0	0	9.07197	No, Trazione
SLV 13	30	-435	10	0	0	0	0	9.07197	No, Trazione
SLV 16	71	-387	3	0	0	0	0	9.07197	No, Trazione
SLV 4	-432	-712	-14	0.05	111.4	0.889	0.82036	9.07197	No
SLV 3	-432	-712	-14	0.05	111.4	0.889	0.82036	9.07197	No
SLV 8	-208	-542	-17	0.046	92.1	0.899	0.75036	8.24559	No
SLV 7	-208	-542	-17	0.046	92.1	0.899	0.75036	8.24559	No
SLV 10	-194	-605	14	0.052	91	0.901	0.83953	8.24559	No
SLV 9	-194	-605	14	0.052	91	0.901	0.83953	8.24559	No

Tabella dei coefficienti di sicurezza minimi

Stato limite	Coeff.s.	Comb.	Verifica
PF_SLU	0	SLU 2	No
V_SLU	0	SLU 2	No
PF_SLV	0	SLV 16	No
V_SLV	0	SLV 3	No
PFFP_SLV	0	SLV 12	No
R_SLV	0	SLV 16	No

Maschio 220

Verifiche condotte secondo D.M. 17-01-18 (N.T.C.)

Dati geometrici

X ini.	Y ini.	X fin.	Y fin.	Quota i.	Quota.s	l	Sp.	h netta	h ini.	h fin.	a	a.s.,sx	a.s.,dx
-19.663	5.937	-19.663	6.64	L6	L7	0.703	0.28	3.1	3.1	3.1			

Caratteristiche del materiale

(Circolare 7 21-01-19 C8.5.I) Muratura in mattoni pieni e malta di calce LC2_Corti

fb	fk	fvk0	fmedio	τ0	fv0	μ	ϕ	fv,lim	E	G	FC
600000			345000	9000	20000	0.58	0.77	32500	320000000	128000000	1.2

Verifica a pressoflessione nel piano secondo D.M. 17-01-18 NTC §7.8.2.2.1 in combinazioni non sismiche, γM = 3

Comb.	Quota	N	M	σ0	Mu	c.s.	Verifica
SLU 1	12.05	-1760	1.21	8945	550.7	454.653	Si
SLU 1	15.15	-5	-351.14	0	0	0	No, e>l/2
SLU 57	12.05	-2790	-2.68	14175	809.72	302.579	Si
SLU 57	15.15	-20	-711	0	0	0	No, e>l/2
SLU 55	12.05	-2508	-4.19	12743	743.4	177.226	Si
SLU 55	15.15	24	-586.55	0	0	0	No, Trazione
SLU 59	12.05	-2710	-0.06	13769	791.29	1000	Si
SLU 59	15.15	23	-738.58	0	0	0	No, Trazione
SLU 61	12.05	-2368	-12.82	12034	709.3	55.334	Si
SLU 61	15.15	16	-433.34	0	0	0	No, Trazione
SLU 56	12.05	-2801	-2.38	14233	812.35	342.005	Si
SLU 56	15.15	-30	-711.79	0	0	0	No, e>l/2
SLU 58	12.05	-2721	0.24	13828	793.96	1000	Si
SLU 58	15.15	13	-739.37	0	0	0	No, Trazione
SLU 54	12.05	-2595	-6.61	13187	764.36	115.588	Si
SLU 54	15.15	-25	-559.49	0	0	0	No, e>l/2
SLU 53	12.05	-2607	-6.31	13246	767.09	121.528	Si
SLU 53	15.15	-35	-560.29	0	0	0	No, e>l/2
SLU 60	12.05	-2380	-12.52	12093	712.15	56.891	Si
SLU 60	15.15	6	-434.13	0	0	0	No, Trazione

Verifica a pressoflessione nel piano secondo D.M. 17-01-18 NTC §7.8.2.2.1 in combinazioni sismiche, γM = 2

Comb.	Quota	N	M	σ0	Mu	c.s.	Verifica
SLV 15	12.05	-1113	101.83	5653	372.88	3.662	Si
SLV 15	15.15	-341	-560.73	0	0	0	No, e>l/2
SLV 6	12.05	-1966	353.42	9988	634.32	1.795	Si
SLV 6	15.15	1489	-248.15	0	0	0	No, Trazione
SLV 13	12.05	-1045	358.33	5312	351.38	0.981	No, M>Mu
SLV 13	15.15	574	-524.91	0	0	0	No, Trazione
SLV 14	12.05	-1045	358.33	5312	351.38	0.981	No, M>Mu
SLV 14	15.15	574	-524.91	0	0	0	No, Trazione
SLV 5	12.05	-1966	353.42	9988	634.32	1.795	Si
SLV 5	15.15	1489	-248.15	0	0	0	No, Trazione
SLV 10	12.05	-1505	493.8	7646	495.7	1.004	Si
SLV 10	15.15	1560	-356.6	0	0	0	No, Trazione
SLV 1	12.05	-2582	-109.59	13120	809.91	7.39	Si
SLV 1	15.15	339	-163.4	0	0	0	No, Trazione
SLV 16	12.05	-1113	101.83	5653	372.88	3.662	Si
SLV 16	15.15	-341	-560.73	0	0	0	No, e>l/2
SLV 2	12.05	-2582	-109.59	13120	809.91	7.39	Si
SLV 2	15.15	339	-163.4	0	0	0	No, Trazione
SLV 9	12.05	-1505	493.8	7646	495.7	1.004	Si
SLV 9	15.15	1560	-356.6	0	0	0	No, Trazione

Verifica a taglio nel piano secondo D.M. 17-01-18 (N.T.C.) §7.8.2.2.2 con rottura per scorrimento in combinazioni non sismiche, γM = 3

Comb.	Quota	N	V par	M	σ0	σN	l'	fvd	Vt scorr.	Vt fess.diag.	Vt,lim	c.s.	Verifica
SLU 57	12.05	-2790	-12	-2.68		14175	0.7028	7446	1465			122.28	Si
SLU 57	15.15	-20	766	-711		0	0	5556	0			0	No, Vu<V
SLU 53	12.05	-2607	-38	-6.31		13246	0.7028	7322	1441			37.52	Si
SLU 53	15.15	-35	594	-560.29		0	0	5556	0			0	No, Vu<V
SLU 55	12.05	-2508	-19	-4.19		12743	0.7028	7255	1428			75.39	Si
SLU 55	15.15	24	629	-586.55		0	0	5556	0			0	No, Vu<V
SLU 54	12.05	-2595	-40	-6.61		13187	0.7028	7314	1439			35.7	Si
SLU 54	15.15	-25	592	-559.49		0	0	5556	0			0	No, Vu<V
SLU 59	12.05	-2710	11	-0.06		13769	0.7028	7391	1455			136.22	Si
SLU 59	15.15	23	805	-738.58		0	0	5556	0			0	No, Vu<V
SLU 61	12.05	-2368	-72	-12.82		12034	0.7028	7160	1409			19.66	Si
SLU 61	15.15	16	444	-433.34		0	0	5556	0			0	No, Vu<V
SLU 60	12.05	-2380	-70	-12.52		12093	0.7028	7168	1411			20.22	Si
SLU 60	15.15	6	446	-434.13		0	0	5556	0			0	No, Vu<V
SLU 56	12.05	-2801	-10	-2.38		14233	0.7028	7453	1467			145.75	Si
SLU 56	15.15	-30	769	-711.79		0	0	5556	0			0	No, Vu<V
SLU 1	12.05	-1760	4	1.21		8945	0.7028	6748	1328			345.42	Si
SLU 1	15.15	-5	382	-351.14		0	0	5556	0			0	No, Vu<V
SLU 58	12.05	-2721	13	0.24		13828	0.7028	7399	1456			115.58	Si
SLU 58	15.15	13	807	-739.37		0	0	5556	0			0	No, Vu<V

Verifica a taglio nel piano secondo D.M. 17-01-18 (N.T.C.) §7.8.2.2.2 con rottura per scorrimento in combinazioni sismiche, γM = 2

Comb.	Quota	N	V par	M	σ0	σN	l'	fvd	Vt scorr.	Vt fess.diag.	Vt,lim	c.s.	Verifica
SLV 9	12.05	-1505	533	493.8		77026	0.0698	16250	317			0.6	No, Vu<V
SLV 9	15.15	1560	1159	-356.6		0	0	8333	0			0	No, Vu<V
SLV 1	12.05	-2582	-1068	-109.59		13120	0.7028	10957	2156			2.02	Si
SLV 1	15.15	339	-342	-163.4		0	0	8333	0			0	No, Vu<V
SLV 5	12.05	-1966	-135	353.42		13635	0.5149	11060	1595			11.84	Si
SLV 5	15.15	1489	631	-248.15		0	0	8333	0			0	No, Vu<V
SLV 10	12.05	-1505	533	493.8		77026	0.0698	16250	317			0.6	No, Vu<V
SLV 10	15.15	1560	1159	-356.6		0	0	8333	0			0	No, Vu<V
SLV 6	12.05	-1966	-135	353.42		13635	0.5149	11060	1595			11.84	Si
SLV 6	15.15	1489	631	-248.15		0	0	8333	0			0	No, Vu<V
SLV 2	12.05	-2582	-1068	-109.59		13120	0.7028	10957	2156			2.02	Si
SLV 2	15.15	339	-342	-163.4		0	0	8333	0			0	No, Vu<V
SLV 14	12.05	-1045	1156	358.33		144184	0.0259	16250	118			0.1	No, Vu<V
SLV 14	15.15	574	1417	-524.91		0	0	8333	0			0	No, Vu<V
SLV 13	12.05	-1045	1156	358.33		144184	0.0259	16250	118			0.1	No, Vu<V
SLV 13	15.15	574	1417	-524.91		0	0	8333	0			0	No, Vu<V

Comb.	Quota	N	V par	M	σ0	σN	l'	fvd	Vt scorr.	Vt fess.diag.	Vt,lim	c.s.	Verifica
SLV 16	12.05	-1113	1024	101.83		5653	0.7028	9464	1862			1.82	Si
SLV 16	15.15	-341	1111	-560.73		0	0	8333	0			0	No, Vu<V
SLV 15	12.05	-1113	1024	101.83		5653	0.7028	9464	1862			1.82	Si
SLV 15	15.15	-341	1111	-560.73		0	0	8333	0			0	No, Vu<V

Verifica a pressoflessione fuori piano D.M. 17-01-18 (N.T.C.)

quota 13.6 Wa 0.05 denominatore 8 γM = 2

Comb.	fd	Sa	σ0	N	M	Mc	Coeff.s.	Verifica
SLV 10	143750	0.53	0	-295	78.39	0	0	No, e>t/2
SLV 13	143750	0.53	0	-311	78.39	0	0	No, e>t/2
SLV 14	143750	0.53	0	-311	78.39	0	0	No, e>t/2
SLV 9	143750	0.53	0	-295	78.39	0	0	No, e>t/2
SLV 5	143750	0.53	3250	-640	78.39	87.16	1.11	Si
SLV 6	143750	0.53	3250	-640	78.39	87.16	1.11	Si
SLV 16	143750	0.53	3393	-668	78.39	90.89	1.16	Si
SLV 15	143750	0.53	3393	-668	78.39	90.89	1.16	Si
SLV 2	143750	0.53	7407	-1458	78.39	191.69	2.45	Si
SLV 1	143750	0.53	7407	-1458	78.39	191.69	2.45	Si

Verifica dei meccanismi locali di collasso con analisi cinematica lineare

forza di aggancio al piano = 0 quota mezzeria = 13.6 Wa = 0.05 Ta = 0.0573

Comb.	N top	N base	V orto	α0	M*	e*	a0*	aLim	Verifica
SLV 9	1560	-1505	-44	0	0	0	0	8.24559	No, Trazione
SLV 2	339	-2582	17	0	0	0	0	9.07197	No, Trazione
SLV 14	574	-1045	-19	0	0	0	0	9.07197	No, Trazione
SLV 13	574	-1045	-19	0	0	0	0	9.07197	No, Trazione
SLV 5	1489	-1966	-33	0	0	0	0	8.24559	No, Trazione
SLV 10	1560	-1505	-44	0	0	0	0	8.24559	No, Trazione
SLV 6	1489	-1966	-33	0	0	0	0	8.24559	No, Trazione
SLV 1	339	-2582	17	0	0	0	0	9.07197	No, Trazione
SLV 8	-1563	-2190	74	0.022	247.4	0.912	0.34688	8.24559	No
SLV 7	-1563	-2190	74	0.022	247.4	0.912	0.34688	8.24559	No

Tabella dei coefficienti di sicurezza minimi

Stato limite	Coeff.s.	Comb.	Verifica
PF_SLU	0	SLU 84	No
V_SLU	0	SLU 1	No
PF_SLV	0	SLV 14	No
V_SLV	0	SLV 1	No
PFFP_SLV	0	SLV 9	No
R_SLV	0	SLV 14	No

Maschio 221

Verifiche condotte secondo D.M. 17-01-18 (N.T.C.)

Dati geometrici

X ini.	Y ini.	X fin.	Y fin.	Quota i.	Quota.s	l	Sp.	h netta	h ini.	h fin.	a	a.s.,sx	a.s.,dx
-19.57	1.141	-19.57	5.797	L6	L7	4.656	0.14	3.1	3.1	3.1			

Caratteristiche del materiale

(Circolare 7 21-01-19 C8.5.I) Muratura in mattoni pieni e malta di calce LC2_Corti

fb	fk	fvk0	fmedio	τ0	fv0	μ	ϕ	fv,lim	E	G	FC
600000			345000	9000	20000	0.58	0.77	32500	320000000	128000000	1.2

Verifica a pressoflessione nel piano secondo D.M. 17-01-18 NTC §7.8.2.2.1 in combinazioni non sismiche, γM = 3

Comb.	Quota	N	M	σ0	Mu	c.s.	Verifica
SLU 84	12.05	-9289	33.21	14251	17841.79	537.279	Si
SLU 84	15.15	-3398	6780.91	5212	7403.25	1.092	Si
SLU 72	12.05	-9447	-385.53	14492	18079.04	46.894	Si
SLU 72	15.15	-4216	8299.62	6467	9034.92	1.089	Si
SLU 79	12.05	-9761	-63.98	14974	18545.52	289.882	Si
SLU 79	15.15	-4192	8339.72	6431	8988.79	1.078	Si
SLU 80	12.05	-9793	-132.2	15024	18593.25	140.647	Si
SLU 80	15.15	-4193	8335.81	6432	8990.06	1.078	Si
SLU 37	12.05	-8204	61.79	12586	16147.98	261.338	Si
SLU 37	15.15	-3701	7400.3	5678	8015.71	1.083	Si
SLU 59	12.05	-9156	-291.49	14047	17639.75	60.516	Si
SLU 59	15.15	-3952	7826.29	6063	8515.04	1.088	Si
SLU 83	12.05	-9257	101.43	14201	17792.63	175.419	Si
SLU 83	15.15	-3397	6784.82	5211	7401.93	1.091	Si
SLU 71	12.05	-9414	-317.31	14443	18030.33	56.823	Si
SLU 71	15.15	-4215	8303.53	6467	9033.64	1.088	Si
SLU 58	12.05	-9124	-223.27	13997	17590.22	78.785	Si
SLU 58	15.15	-3951	7830.2	6062	8513.75	1.087	Si
SLU 38	12.05	-8237	-6.43	12636	16200.13	1000	Si
SLU 38	15.15	-3702	7396.39	5679	8017.01	1.084	Si

Verifica a pressoflessione nel piano secondo D.M. 17-01-18 NTC §7.8.2.2.1 in combinazioni sismiche, γM = 2

Comb.	Quota	N	M	σ0	Mu	c.s.	Verifica
SLV 14	12.05	-4101	-2130.87	6291	9054.45	4.249	Si
SLV 14	15.15	-2283	5488.02	0	0	0	No, e>l/2
SLV 1	12.05	-7715	444.06	11836	16220.18	36.527	Si
SLV 1	15.15	-1608	4642.41	0	0	0	No, e>l/2
SLV 3	12.05	-8294	1892.32	12724	17297.04	9.141	Si

Comb.	Quota	N	M	σ0	Mu	c.s.	Verifica
SLV 3	15.15	-1666	2251.3	2556	3797	1.687	Si
SLV 5	12.05	-5774	-2146.8	8859	12468	5.808	Si
SLV 5	15.15	-1776	7728.02	0	0	0	No, e>l/2
SLV 10	12.05	-4690	-2919.28	7195	10275.46	3.52	Si
SLV 10	15.15	-1979	7981.7	0	0	0	No, e>l/2
SLV 13	12.05	-4101	-2130.87	6291	9054.45	4.249	Si
SLV 13	15.15	-2283	5488.02	0	0	0	No, e>l/2
SLV 6	12.05	-5774	-2146.8	8859	12468	5.808	Si
SLV 6	15.15	-1776	7728.02	0	0	0	No, e>l/2
SLV 4	12.05	-8294	1892.32	12724	17297.04	9.141	Si
SLV 4	15.15	-1666	2251.3	2556	3797	1.687	Si
SLV 9	12.05	-4690	-2919.28	7195	10275.46	3.52	Si
SLV 9	15.15	-1979	7981.7	0	0	0	No, e>l/2
SLV 2	12.05	-7715	444.06	11836	16220.18	36.527	Si
SLV 2	15.15	-1608	4642.41	0	0	0	No, e>l/2

Verifica a taglio nel piano secondo D.M. 17-01-18 (N.T.C.) §7.8.2.2.2 con rottura per scorrimento in combinazioni non sismiche, γM = 3

Comb.	Quota	N	V par	M	σ0	σN	l'	fvd	Vt scorr.	Vt fess.diag.	Vt,lim	c.s.	Verifica
SLU 58	12.05	-9124	270	-223.27		13997	4.656	7422	4838			17.91	Si
SLU 58	15.15	-3951	-591	7830.2		27171	1.0387	9178	1335			2.26	Si
SLU 9	12.05	-7253	143	-419.06		11128	4.656	7039	4588			32.07	Si
SLU 9	15.15	-3484	-576	6850.67		22945	1.0845	8615	1308			2.27	Si
SLU 79	12.05	-9761	337	-63.98		14974	4.656	7552	4923			14.59	Si
SLU 79	15.15	-4192	-603	8339.72		29476	1.0159	9486	1349			2.24	Si
SLU 59	12.05	-9156	262	-291.49		14047	4.656	7428	4842			18.45	Si
SLU 59	15.15	-3952	-601	7826.29		27073	1.0426	9165	1338			2.23	Si
SLU 72	12.05	-9447	238	-385.53		14492	4.656	7488	4881			20.47	Si
SLU 72	15.15	-4216	-659	8299.62		27940	1.0778	9281	1400			2.12	Si
SLU 71	12.05	-9414	246	-317.31		14443	4.656	7481	4877			19.81	Si
SLU 71	15.15	-4215	-650	8303.53		28032	1.0741	9293	1397			2.15	Si
SLU 30	12.05	-7890	210	-259.77		12105	4.656	7169	4673			22.22	Si
SLU 30	15.15	-3725	-588	7360.19		25198	1.0559	8915	1318			2.24	Si
SLU 80	12.05	-9793	330	-132.2		15024	4.656	7559	4927			14.94	Si
SLU 80	15.15	-4193	-613	8335.81		29373	1.0196	9472	1352			2.21	Si
SLU 51	12.05	-8810	171	-544.82		13515	4.656	7358	4796			28.01	Si
SLU 51	15.15	-3975	-647	7790.09		25712	1.1042	8984	1389			2.15	Si
SLU 50	12.05	-8777	179	-476.6		13466	4.656	7351	4792			26.78	Si
SLU 50	15.15	-3974	-638	7794		25799	1.1003	8995	1386			2.17	Si

Verifica a taglio nel piano secondo D.M. 17-01-18 (N.T.C.) §7.8.2.2.2 con rottura per scorrimento in combinazioni sismiche, γM = 2

Comb.	Quota	N	V par	M	σ0	σN	l'	fvd	Vt scorr.	Vt fess.diag.	Vt,lim	c.s.	Verifica
SLV 6	12.05	-5774	-6435	-2146.8		8859	4.656	10105	6587			1.02	Si
SLV 6	15.15	-1776	-4625	7728.02		0	0	8333	0			0	No, Vu<V
SLV 5	12.05	-5774	-6435	-2146.8		8859	4.656	10105	6587			1.02	Si
SLV 5	15.15	-1776	-4625	7728.02		0	0	8333	0			0	No, Vu<V
SLV 1	12.05	-7715	-774	444.06		11836	4.656	10700	6975			9.01	Si
SLV 1	15.15	-1608	-447	4642.41		0	0	8333	0			0	No, Vu<V
SLV 7	12.05	-7704	7530	2680.73		11819	4.656	10697	6973			0.93	No, Vu<V
SLV 7	15.15	-1970	4875	-242.38		3023	4.656	8938	5826			1.2	Si
SLV 8	12.05	-7704	7530	2680.73		11819	4.656	10697	6973			0.93	No, Vu<V
SLV 8	15.15	-1970	4875	-242.38		3023	4.656	8938	5826			1.2	Si
SLV 9	12.05	-4690	-7098	-2919.28		7195	4.656	9772	6370			0.9	No, Vu<V
SLV 9	15.15	-1979	-5357	7981.7		0	0	8333	0			0	No, Vu<V
SLV 13	12.05	-4101	-2983	-2130.87		6291	4.656	9591	6252			2.1	Si
SLV 13	15.15	-2283	-2885	5488.02		0	0	8333	0			0	No, Vu<V
SLV 14	12.05	-4101	-2983	-2130.87		6291	4.656	9591	6252			2.1	Si
SLV 14	15.15	-2283	-2885	5488.02		0	0	8333	0			0	No, Vu<V
SLV 10	12.05	-4690	-7098	-2919.28		7195	4.656	9772	6370			0.9	No, Vu<V
SLV 10	15.15	-1979	-5357	7981.7		0	0	8333	0			0	No, Vu<V
SLV 2	12.05	-7715	-774	444.06		11836	4.656	10700	6975			9.01	Si
SLV 2	15.15	-1608	-447	4642.41		0	0	8333	0			0	No, Vu<V

Verifica a pressoflessione fuori piano D.M. 17-01-18 (N.T.C.)

quota 13.6 Wa 0.03 denominatore 8 γM = 2

Comb.	fd	Sa	σ0	N	M	Mc	Coeff.s.	Verifica
SLV 16	143750	0.53	0	-3423	271.43	0	0	No, e>t/2
SLV 1	143750	0.53	0	-3773	271.43	0	0	No, e>t/2
SLV 10	143750	0.53	0	-2897	271.43	0	0	No, e>t/2
SLV 13	143750	0.53	0	-3066	271.43	0	0	No, e>t/2
SLV 14	143750	0.53	0	-3066	271.43	0	0	No, e>t/2
SLV 5	143750	0.53	0	-3109	271.43	0	0	No, e>t/2
SLV 9	143750	0.53	0	-2897	271.43	0	0	No, e>t/2
SLV 6	143750	0.53	0	-3109	271.43	0	0	No, e>t/2
SLV 15	143750	0.53	0	-3423	271.43	0	0	No, e>t/2
SLV 2	143750	0.53	0	-3773	271.43	0	0	No, e>t/2

Verifica dei meccanismi locali di collasso con analisi cinematica lineare

forza di aggancio al piano = 0 quota mezzeria = 13.6 Wa = 0.03 Ta = 0.1146

Comb.	N top	N base	V orto	α0	M*	e*	a0*	aLim	Verifica
SLV 15	-2341	-4679	-6	0.031	542.7	0.89	0.50641	19.30799	No
SLV 16	-2341	-4679	-6	0.031	542.7	0.89	0.50641	19.30799	No
SLV 14	-2283	-4101	0	0.033	537.2	0.89	0.53172	19.30799	No
SLV 13	-2283	-4101	0	0.033	537.2	0.89	0.53172	19.30799	No
SLV 2	-1608	-7715	4	0.033	475.4	0.889	0.54589	19.30799	No
SLV 1	-1608	-7715	4	0.033	475.4	0.889	0.54589	19.30799	No
SLV 3	-1666	-8294	-2	0.034	480.6	0.889	0.55316	19.30799	No
SLV 4	-1666	-8294	-2	0.034	480.6	0.889	0.55316	19.30799	No
SLV 11	-2173	-6620	-11	0.03	526.9	0.89	0.49073	16.84384	No
SLV 12	-2173	-6620	-11	0.03	526.9	0.89	0.49073	16.84384	No

Tabella dei coefficienti di sicurezza minimi

Stato limite	Coeff.s.	Comb.	Verifica
PF_SLU	1.078	SLU 79	Si
V_SLU	2.124	SLU 72	Si
PF_SLV	0	SLV 1	No
V_SLV	0	SLV 1	No
PFFP_SLV	0	SLV 1	No
R_SLV	0.026	SLV 15	No

Maschio 222

Verifiche condotte secondo D.M. 17-01-18 (N.T.C.)

Dati geometrici

X ini.	Y ini.	X fin.	Y fin.	Quota i.	Quota.s	l	Sp.	h netta	h ini.	h fin.	a	a.s.,sx	a.s.,dx
-16.187	-3.183	-17.277	-3.183	L6	L7	1.09	0.28	3.1	3.1	3.1			

Caratteristiche del materiale

(Circolare 7 21-01-19 C8.5.I) Muratura in mattoni pieni e malta di calce LC2_Corti

fb	fk	fvk0	fmedio	τ0	fv0	μ	ϕ	fv,lim	E	G	FC
600000			345000	9000	20000	0.58	0.77	32500	320000000	128000000	1.2

Verifica a pressoflessione nel piano secondo D.M. 17-01-18 NTC §7.8.2.2.1 in combinazioni non sismiche, γM = 3

Comb.	Quota	N	M	σ0	Mu	c.s.	Verifica
SLU 60	12.95	-879	-654.28	0	0	0	No, e>l/2
SLU 60	14.85	-818	261.53	2682	431.35	1.649	Si
SLU 42	12.95	-38	-689.2	0	0	0	No, e>l/2
SLU 42	14.85	-650	244.91	2131	345.16	1.409	Si
SLU 54	12.95	-1094	-674.84	0	0	0	No, e>l/2
SLU 54	14.85	-1084	303.83	3551	564.84	1.859	Si
SLU 61	12.95	-662	-695.68	0	0	0	No, e>l/2
SLU 61	14.85	-820	266.86	2686	431.93	1.619	Si
SLU 57	12.95	-1114	-678.46	0	0	0	No, e>l/2
SLU 57	14.85	-1087	308.1	3563	566.57	1.839	Si
SLU 62	12.95	-899	-657.89	0	0	0	No, e>l/2
SLU 62	14.85	-822	265.8	2693	433.12	1.63	Si
SLU 55	12.95	-684	-698.95	0	0	0	No, e>l/2
SLU 55	14.85	-840	273.92	2754	442.54	1.616	Si
SLU 58	12.95	-1065	-633.56	0	0	0	No, e>l/2
SLU 58	14.85	-842	269.3	2759	443.34	1.646	Si
SLU 47	12.95	-1023	-633.73	0	0	0	No, e>l/2
SLU 47	14.85	-879	272.14	2881	462.22	1.698	Si
SLU 59	12.95	-849	-674.97	0	0	0	No, e>l/2
SLU 59	14.85	-843	274.63	2763	443.92	1.616	Si

Verifica a pressoflessione nel piano secondo D.M. 17-01-18 NTC §7.8.2.2.1 in combinazioni sismiche, γM = 2

Comb.	Quota	N	M	σ0	Mu	c.s.	Verifica
SLV 9	12.95	-272	-1869.15	0	0	0	No, e>l/2
SLV 9	14.85	-1042	1121.46	0	0	0	No, e>l/2
SLV 7	12.95	-1345	864.82	0	0	0	No, e>l/2
SLV 7	14.85	-305	-692.84	0	0	0	No, e>l/2
SLV 4	12.95	-2576	1183.99	8441	1306.83	1.104	Si
SLV 4	14.85	-272	-650.44	0	0	0	No, e>l/2
SLV 12	12.95	-285	23.47	934	154.2	6.571	Si
SLV 12	14.85	-497	-302.11	0	0	0	No, e>l/2
SLV 5	12.95	-1332	-1027.79	0	0	0	No, e>l/2
SLV 5	14.85	-850	730.73	0	0	0	No, e>l/2
SLV 8	12.95	-1345	864.82	0	0	0	No, e>l/2
SLV 8	14.85	-305	-692.84	0	0	0	No, e>l/2
SLV 3	12.95	-2576	1183.99	8441	1306.83	1.104	Si
SLV 3	14.85	-272	-650.44	0	0	0	No, e>l/2
SLV 6	12.95	-1332	-1027.79	0	0	0	No, e>l/2
SLV 6	14.85	-850	730.73	0	0	0	No, e>l/2
SLV 10	12.95	-272	-1869.15	0	0	0	No, e>l/2
SLV 10	14.85	-1042	1121.46	0	0	0	No, e>l/2
SLV 11	12.95	-285	23.47	934	154.2	6.571	Si
SLV 11	14.85	-497	-302.11	0	0	0	No, e>l/2

Verifica a taglio nel piano secondo D.M. 17-01-18 (N.T.C.) §7.8.2.2.2 con rottura per scorrimento in combinazioni non sismiche, γM = 3

Comb.	Quota	N	V par	M	σ0	σN	l'	fvd	Vt scorr.	Vt fess.diag.	Vt,lim	c.s.	Verifica
SLU 62	12.95	-899	-1456	-657.89		0	0	5556	0			0	No, Vu<V
SLU 62	14.85	-822	-108	265.8		4416	0.6648	6144	1144			10.56	Si
SLU 58	12.95	-1065	-1390	-633.56		0	0	5556	0			0	No, Vu<V
SLU 58	14.85	-842	-52	269.3		4452	0.6754	6149	1163			22.46	Si
SLU 47	12.95	-1023	-1204	-633.73		0	0	5556	0			0	No, Vu<V
SLU 47	14.85	-879	106	272.14		4446	0.7064	6148	1216			11.48	Si
SLU 57	12.95	-1114	-1404	-678.46		0	0	5556	0			0	No, Vu<V
SLU 57	14.85	-1087	0	308.1		4948	0.7847	6215	1366			1000	Si
SLU 42	12.95	-38	-1428	-689.2		0	0	5556	0			0	No, Vu<V
SLU 42	14.85	-650	-79	244.91		4598	0.5052	6169	873			11.06	Si
SLU 54	12.95	-1094	-1399	-674.84		0	0	5556	0			0	No, Vu<V
SLU 54	14.85	-1084	-32	303.83		4876	0.7938	6206	1379			43.12	Si
SLU 61	12.95	-662	-1440	-695.68		0	0	5556	0			0	No, Vu<V
SLU 61	14.85	-820	-61	266.86		4448	0.6581	6149	1133			18.52	Si
SLU 55	12.95	-684	-1367	-698.95		0	0	5556	0			0	No, Vu<V
SLU 55	14.85	-840	48	273.92		4568	0.6571	6165	1134			23.73	Si
SLU 59	12.95	-849	-1379	-674.97		0	0	5556	0			0	No, Vu<V

Comb.	Quota	N	V par	M	σ0	σN	l'	fvd	Vt scorr.	Vt fess.diag.	Vt,lim	c.s.	Verifica
SLU 59	14.85	-843	27	274.63		4578	0.6578	6166	1136			42.17	Si
SLU 60	12.95	-879	-1451	-654.28		0	0	5556	0			0	No, Vu<V
SLU 60	14.85	-818	-140	261.53		4322	0.6763	6132	1161			8.3	Si

Verifica a taglio nel piano secondo D.M. 17-01-18 (N.T.C.) §7.8.2.2.2 con rottura per scorrimento in combinazioni sismiche, γM = 2

Comb.	Quota	N	V par	M	σ0	σN	l'	fvd	Vt scorr.	Vt fess.diag.	Vt,lim	c.s.	Verifica
SLV 11	12.95	-285	-156	23.47		934	1.0899	8520	2600			16.68	Si
SLV 11	14.85	-497	-515	-302.11		0	0	8333	0			0	No, Vu<V
SLV 7	12.95	-1345	1241	864.82		0	0	8333	0			0	No, Vu<V
SLV 7	14.85	-305	-367	-692.84		0	0	8333	0			0	No, Vu<V
SLV 5	12.95	-1332	-2044	-1027.79		0	0	8333	0			0	No, Vu<V
SLV 5	14.85	-850	340	730.73		0	0	8333	0			0	No, Vu<V
SLV 4	12.95	-2576	1720	1183.99		35937	0.256	15521	1113			0.65	No, Vu<V
SLV 4	14.85	-272	53	-650.44		0	0	8333	0			0	No, Vu<V
SLV 6	12.95	-1332	-2044	-1027.79		0	0	8333	0			0	No, Vu<V
SLV 6	14.85	-850	340	730.73		0	0	8333	0			0	No, Vu<V
SLV 9	12.95	-272	-3441	-1869.15		0	0	8333	0			0	No, Vu<V
SLV 9	14.85	-1042	192	1121.46		0	0	8333	0			0	No, Vu<V
SLV 10	12.95	-272	-3441	-1869.15		0	0	8333	0			0	No, Vu<V
SLV 10	14.85	-1042	192	1121.46		0	0	8333	0			0	No, Vu<V
SLV 8	12.95	-1345	1241	864.82		0	0	8333	0			0	No, Vu<V
SLV 8	14.85	-305	-367	-692.84		0	0	8333	0			0	No, Vu<V
SLV 3	12.95	-2576	1720	1183.99		35937	0.256	15521	1113			0.65	No, Vu<V
SLV 3	14.85	-272	53	-650.44		0	0	8333	0			0	No, Vu<V
SLV 12	12.95	-285	-156	23.47		934	1.0899	8520	2600			16.68	Si
SLV 12	14.85	-497	-515	-302.11		0	0	8333	0			0	No, Vu<V

Verifica a pressoflessione fuori piano D.M. 17-01-18 (N.T.C.)

quota 13.6 Wa 0.05 denominatore 8 γM = 2

Comb.	fd	Sa	σ0	N	M	Mc	Coeff.s.	Verifica
SLV 13	143750	0.53	0	1132	118.79	0	0	No, Trazione
SLV 12	143750	0.53	0	30	118.79	0	0	No, Trazione
SLV 10	143750	0.53	0	-151	118.79	0	0	No, e>t/2
SLV 15	143750	0.53	0	1187	118.79	0	0	No, Trazione
SLV 11	143750	0.53	0	30	118.79	0	0	No, Trazione
SLV 9	143750	0.53	0	-151	118.79	0	0	No, e>t/2
SLV 16	143750	0.53	0	1187	118.79	0	0	No, Trazione
SLV 14	143750	0.53	0	1132	118.79	0	0	No, Trazione
SLV 8	143750	0.53	3327	-1015	118.79	138.29	1.16	Si
SLV 7	143750	0.53	3327	-1015	118.79	138.29	1.16	Si

Verifica dei meccanismi locali di collasso con analisi cinematica lineare

forza di aggancio al piano = 0 quota mezzeria = 13.6 Wa = 0.05 Ta = 0.0573

Comb.	N top	N base	V orto	α0	M*	e*	a0*	aLim	Verifica
SLV 5	115	-4655	-7	0	0	0	0	8.24559	No, Trazione
SLV 6	115	-4655	-7	0	0	0	0	8.24559	No, Trazione
SLV 10	176	-5278	-10	0	0	0	0	8.24559	No, Trazione
SLV 11	-741	171	6	0	0	0	0	8.24559	No, Trazione
SLV 12	-741	171	6	0	0	0	0	8.24559	No, Trazione
SLV 7	-801	794	9	0	0	0	0	8.24559	No, Trazione
SLV 8	-801	794	9	0	0	0	0	8.24559	No, Trazione
SLV 9	176	-5278	-10	0	0	0	0	8.24559	No, Trazione
SLV 3	-551	-386	7	0.068	205.3	0.893	1.10325	9.07197	No
SLV 4	-551	-386	7	0.068	205.3	0.893	1.10325	9.07197	No

Tabella dei coefficienti di sicurezza minimi

Stato limite	Coeff.s.	Comb.	Verifica
PF_SLU	0	SLU 2	No
V_SLU	0	SLU 2	No
PF_SLV	0	SLV 16	No
V_SLV	0	SLV 3	No
PFFP_SLV	0	SLV 16	No
R_SLV	0	SLV 12	No

Maschio 223

Verifiche condotte secondo D.M. 17-01-18 (N.T.C.)

Dati geometrici

X ini.	Y ini.	X fin.	Y fin.	Quota i.	Quota.s	l	Sp.	h netta	h ini.	h fin.	a	a.s.,sx	a.s.,dx
-18.448	-3.183	-18.448	1.141	L6	L7	4.324	0.14	3.1	3.1	3.1			

Caratteristiche del materiale

(Circolare 7 21-01-19 C8.5.I) Muratura in mattoni pieni e malta di calce LC2_Corti

fb	fk	fvk0	fmedio	τ0	fv0	μ	ϕ	fv,lim	E	G	FC
600000			345000	9000	20000	0.58	0.77	32500	320000000	128000000	1.2

Verifica a pressoflessione nel piano secondo D.M. 17-01-18 NTC §7.8.2.2.1 in combinazioni non sismiche, γM = 3

Comb.	Quota	N	M	σ0	Mu	c.s.	Verifica
SLU 16	12.05	-5728	1397.26	9462	10945.48	7.834	Si
SLU 16	15.15	-421	488.51	695	902	1.846	Si
SLU 58	12.05	-7018	1655.45	11594	13014.19	7.861	Si
SLU 58	15.15	-501	563.22	827	1071.97	1.903	Si
SLU 29	12.05	-5901	1538.48	9748	11231.84	7.301	Si
SLU 29	15.15	-458	543.95	756	980.2	1.802	Si

Comb.	Quota	N	M	σ0	Mu	c.s.	Verifica
SLU 71	12.05	-7192	1796.66	11880	13280.94	7.392	Si
SLU 71	15.15	-538	618.66	888	1149.91	1.859	Si
SLU 79	12.05	-7476	1681.45	12349	13712.63	8.155	Si
SLU 79	15.15	-540	582.75	892	1154.08	1.98	Si
SLU 8	12.05	-5444	1512.47	8992	10470.23	6.923	Si
SLU 8	15.15	-419	524.42	692	897.81	1.712	Si
SLU 50	12.05	-6734	1770.66	11124	12571.1	7.1	Si
SLU 50	15.15	-499	599.13	824	1067.79	1.782	Si
SLU 37	12.05	-6185	1423.27	10218	11695.68	8.217	Si
SLU 37	15.15	-460	508.04	759	984.38	1.938	Si
SLU 48	12.05	-6988	1799.8	11544	12967.67	7.205	Si
SLU 48	15.15	-549	596.16	907	1173.5	1.968	Si
SLU 6	12.05	-5698	1541.61	9412	10895.56	7.068	Si
SLU 6	15.15	-469	521.45	774	1003.87	1.925	Si

Verifica a pressoflessione nel piano secondo D.M. 17-01-18 NTC §7.8.2.2.1 in combinazioni sismiche, γM = 2

Comb.	Quota	N	M	σ0	Mu	c.s.	Verifica
SLV 6	12.05	-5769	-152.55	9530	11499.9	75.385	Si
SLV 6	15.15	-258	2975.98	0	0	0	No, e>l/2
SLV 14	12.05	-4107	1701.8	6785	8387.32	4.928	Si
SLV 14	15.15	131	1466.23	0	0	0	No, Trazione
SLV 10	12.05	-5137	476.17	8485	10334.61	21.704	Si
SLV 10	15.15	-19	3188.88	0	0	0	No, e>l/2
SLV 9	12.05	-5137	476.17	8485	10334.61	21.704	Si
SLV 9	15.15	-19	3188.88	0	0	0	No, e>l/2
SLV 12	12.05	-4303	1882.26	7108	8762.34	4.655	Si
SLV 12	15.15	-388	-2442.63	0	0	0	No, e>l/2
SLV 5	12.05	-5769	-152.55	9530	11499.9	75.385	Si
SLV 5	15.15	-258	2975.98	0	0	0	No, e>l/2
SLV 7	12.05	-4935	1253.54	8153	9958.44	7.944	Si
SLV 7	15.15	-627	-2655.53	0	0	0	No, e>l/2
SLV 11	12.05	-4303	1882.26	7108	8762.34	4.655	Si
SLV 11	15.15	-388	-2442.63	0	0	0	No, e>l/2
SLV 13	12.05	-4107	1701.8	6785	8387.32	4.928	Si
SLV 13	15.15	131	1466.23	0	0	0	No, Trazione
SLV 8	12.05	-4935	1253.54	8153	9958.44	7.944	Si
SLV 8	15.15	-627	-2655.53	0	0	0	No, e>l/2

Verifica a taglio nel piano secondo D.M. 17-01-18 (N.T.C.) §7.8.2.2.2 con rottura per scorrimento in combinazioni non sismiche, γM = 3

Comb.	Quota	N	V par	M	σ0	σN	l'	fvd	Vt scorr.	Vt fess.diag.	Vt,lim	c.s.	Verifica
SLU 47	12.05	-6509	-318	1636.64		10751	4.324	6989	4231			13.29	Si
SLU 47	15.15	-534	142	294.02		882	4.324	5673	3434			24.25	Si
SLU 5	12.05	-5218	-317	1378.46		8620	4.324	6705	4059			12.81	Si
SLU 5	15.15	-454	134	219.31		750	4.324	5656	3424			25.64	Si
SLU 68	12.05	-6966	-333	1662.65		11507	4.324	7090	4292			12.89	Si
SLU 68	15.15	-573	140	313.55		946	4.324	5682	3440			24.6	Si
SLU 23	12.05	-5366	-305	1093.4		8864	4.324	6737	4079			13.35	Si
SLU 23	15.15	-439	156	112.3		725	4.324	5652	3422			21.93	Si
SLU 31	12.05	-5650	-305	978.19		9333	4.324	6800	4116			13.5	Si
SLU 31	15.15	-441	169	76.39		729	4.324	5653	3422			20.2	Si
SLU 76	12.05	-7250	-332	1547.44		11977	4.324	7152	4330			13.02	Si
SLU 76	15.15	-575	153	277.64		950	4.324	5682	3440			22.44	Si
SLU 26	12.05	-5676	-331	1404.46		9376	4.324	6806	4120			12.43	Si
SLU 26	15.15	-493	132	238.84		814	4.324	5664	3429			26.02	Si
SLU 34	12.05	-5960	-331	1289.25		9845	4.324	6868	4158			12.57	Si
SLU 34	15.15	-495	145	202.92		817	4.324	5665	3429			23.61	Si
SLU 13	12.05	-5502	-316	1263.25		9089	4.324	6767	4097			12.95	Si
SLU 13	15.15	-456	147	183.4		753	4.324	5656	3424			23.3	Si
SLU 55	12.05	-6793	-318	1521.43		11221	4.324	7052	4269			13.43	Si
SLU 55	15.15	-536	155	258.11		886	4.324	5674	3435			22.16	Si

Verifica a taglio nel piano secondo D.M. 17-01-18 (N.T.C.) §7.8.2.2.2 con rottura per scorrimento in combinazioni sismiche, γM = 2

Comb.	Quota	N	V par	M	σ0	σN	l'	fvd	Vt scorr.	Vt fess.diag.	Vt,lim	c.s.	Verifica
SLV 10	12.05	-5137	-4690	476.17		8485	4.324	10030	6072			1.29	Si
SLV 10	15.15	-19	-2781	3188.88		0	0	8333	0			0	No, Vu<V
SLV 11	12.05	-4303	5250	1882.26		7108	4.324	9755	5905			1.12	Si
SLV 11	15.15	-388	3420	-2442.63		0	0	8333	0			0	No, Vu<V
SLV 5	12.05	-5769	-5302	-152.55		9530	4.324	10239	6199			1.17	Si
SLV 5	15.15	-258	-3364	2975.98		0	0	8333	0			0	No, Vu<V
SLV 8	12.05	-4935	4638	1253.54		8153	4.324	9964	6032			1.3	Si
SLV 8	15.15	-627	2837	-2655.53		0	0	8333	0			0	No, Vu<V
SLV 12	12.05	-4303	5250	1882.26		7108	4.324	9755	5905			1.12	Si
SLV 12	15.15	-388	3420	-2442.63		0	0	8333	0			0	No, Vu<V
SLV 9	12.05	-5137	-4690	476.17		8485	4.324	10030	6072			1.29	Si
SLV 9	15.15	-19	-2781	3188.88		0	0	8333	0			0	No, Vu<V
SLV 14	12.05	-4107	-497	1701.8		6785	4.324	9690	5866			11.81	Si
SLV 14	15.15	131	70	1466.23		0	0	8333	0			0	No, Vu<V
SLV 6	12.05	-5769	-5302	-152.55		9530	4.324	10239	6199			1.17	Si
SLV 6	15.15	-258	-3364	2975.98		0	0	8333	0			0	No, Vu<V
SLV 7	12.05	-4935	4638	1253.54		8153	4.324	9964	6032			1.3	Si
SLV 7	15.15	-627	2837	-2655.53		0	0	8333	0			0	No, Vu<V
SLV 13	12.05	-4107	-497	1701.8		6785	4.324	9690	5866			11.81	Si
SLV 13	15.15	131	70	1466.23		0	0	8333	0			0	No, Vu<V

Verifica a pressoflessione fuori piano D.M. 17-01-18 (N.T.C.)

quota 13.6 Wa 0.03 denominatore 8 γM = 2

Comb.	fd	Sa	σ0	N	M	Mc	Coeff.s.	Verifica
SLV 6	143750	0.53	0	-2575	252.08	0	0	No, e>t/2
SLV 4	143750	0.53	0	-2787	252.08	0	0	No, e>t/2

Comb.	fd	Sa	σ0	N	M	Mc	Coeff.s.	Verifica
SLV 8	143750	0.53	0	-2898	252.08	0	0	No, e>t/2
SLV 2	143750	0.53	0	-2691	252.08	0	0	No, e>t/2
SLV 5	143750	0.53	0	-2575	252.08	0	0	No, e>t/2
SLV 7	143750	0.53	0	-2898	252.08	0	0	No, e>t/2
SLV 10	143750	0.53	0	-2573	252.08	0	0	No, e>t/2
SLV 1	143750	0.53	0	-2691	252.08	0	0	No, e>t/2
SLV 3	143750	0.53	0	-2787	252.08	0	0	No, e>t/2
SLV 9	143750	0.53	0	-2573	252.08	0	0	No, e>t/2

Verifica dei meccanismi locali di collasso con analisi cinematica lineare

forza di aggancio al piano = 0 quota mezzeria = 13.6 Wa = 0.03 Ta = 0.1146

Comb.	N top	N base	V orto	α0	M*	e*	a0*	aLim	Verifica
SLV 14	131	-4107	-6	0	0	0	0	19.30799	No, Trazione
SLV 15	20	-3857	-3	0	0	0	0	19.30799	No, Trazione
SLV 16	20	-3857	-3	0	0	0	0	19.30799	No, Trazione
SLV 13	131	-4107	-6	0	0	0	0	19.30799	No, Trazione
SLV 3	-777	-5965	7	0.035	382.3	0.903	0.56819	19.30799	No
SLV 4	-777	-5965	7	0.035	382.3	0.903	0.56819	19.30799	No
SLV 1	-666	-6215	4	0.037	374.3	0.908	0.59391	19.30799	No
SLV 2	-666	-6215	4	0.037	374.3	0.908	0.59391	19.30799	No
SLV 8	-627	-4935	7	0.036	371.6	0.91	0.57796	16.84384	No
SLV 7	-627	-4935	7	0.036	371.6	0.91	0.57796	16.84384	No

Tabella dei coefficienti di sicurezza minimi

Stato limite	Coeff.s.	Comb.	Verifica
PF_SLU	1.712	SLU 8	Si
V_SLU	12.431	SLU 26	Si
PF_SLV	0	SLV 16	No
V_SLV	0	SLV 5	No
PFFP_SLV	0	SLV 1	No
R_SLV	0	SLV 16	No

Maschio 224

Verifiche condotte secondo D.M. 17-01-18 (N.T.C.)

Dati geometrici

X ini.	Y ini.	X fin.	Y fin.	Quota i.	Quota.s	l	Sp.	h netta	h ini.	h fin.	a	a.s.,sx	a.s.,dx
-13.727	-3.183	-15.287	-3.183	L6	L7	1.56	0.28	3.1	3.1	3.1			

Caratteristiche del materiale

(Circolare 7 21-01-19 C8.5.I) Muratura in mattoni pieni e malta di calce LC2_Corti

fb	fk	fvk0	fmedio	τ0	fv0	μ	ϕ	fv,lim	E	G	FC
600000			345000	9000	20000	0.58	0.77	32500	320000000	128000000	1.2

Verifica a pressoflessione nel piano secondo D.M. 17-01-18 NTC §7.8.2.2.1 in combinazioni non sismiche, γM = 3

Comb.	Quota	N	M	σ0	Mu	c.s.	Verifica
SLU 42	12.05	-1628	-1653.04	0	0	0	No, e>l/2
SLU 42	14.15	-2700	1263.7	6181	1946.76	1.541	Si
SLU 81	12.05	-2338	-1868.42	0	0	0	No, e>l/2
SLU 81	14.15	-3371	1530.99	7715	2380.45	1.555	Si
SLU 38	12.05	-1925	-1522.75	0	0	0	No, e>l/2
SLU 38	14.15	-2676	1169.2	6125	1930.48	1.651	Si
SLU 37	12.05	-1953	-1537.19	0	0	0	No, e>l/2
SLU 37	14.15	-2730	1207.98	6250	1966.66	1.628	Si
SLU 41	12.05	-1655	-1667.48	0	0	0	No, e>l/2
SLU 41	14.15	-2755	1302.48	6306	1982.88	1.522	Si
SLU 40	12.05	-1510	-1661.58	0	0	0	No, e>l/2
SLU 40	14.15	-2680	1286.04	6134	1933.24	1.503	Si
SLU 82	12.05	-2310	-1853.98	0	0	0	No, e>l/2
SLU 82	14.15	-3316	1492.21	7590	2345.81	1.572	Si
SLU 39	12.05	-1537	-1676.02	0	0	0	No, e>l/2
SLU 39	14.15	-2735	1324.82	6259	1969.41	1.487	Si
SLU 33	12.05	-1986	-1555.12	0	0	0	No, e>l/2
SLU 33	14.15	-2974	1251.06	6808	2126.24	1.7	Si
SLU 34	12.05	-1790	-1521.67	0	0	0	No, e>l/2
SLU 34	14.15	-2619	1165.69	5995	1892.71	1.624	Si

Verifica a pressoflessione nel piano secondo D.M. 17-01-18 NTC §7.8.2.2.1 in combinazioni sismiche, γM = 2

Comb.	Quota	N	M	σ0	Mu	c.s.	Verifica
SLV 4	12.05	-3285	538.28	7519	2404.78	4.468	Si
SLV 4	14.15	-413	-762.39	0	0	0	No, e>l/2
SLV 15	12.05	-1106	-2147.12	0	0	0	No, e>l/2
SLV 15	14.15	-3767	2083.19	8623	2731.58	1.311	Si
SLV 16	12.05	-1106	-2147.12	0	0	0	No, e>l/2
SLV 16	14.15	-3767	2083.19	8623	2731.58	1.311	Si
SLV 13	12.05	-1104	-2821.77	0	0	0	No, e>l/2
SLV 13	14.15	-4507	2762.48	10316	3218.99	1.165	Si
SLV 7	12.05	-2524	385.48	5778	1876	4.867	Si
SLV 7	14.15	-724	-558.95	1658	557.33	0.997	No, M>Mu
SLV 8	12.05	-2524	385.48	5778	1876	4.867	Si
SLV 8	14.15	-724	-558.95	1658	557.33	0.997	No, M>Mu
SLV 10	12.05	-1865	-2668.98	0	0	0	No, e>l/2
SLV 10	14.15	-4195	2559.05	9603	3015.61	1.178	Si
SLV 3	12.05	-3285	538.28	7519	2404.78	4.468	Si
SLV 3	14.15	-413	-762.39	0	0	0	No, e>l/2

Comb.	Quota	N	M	σ0	Mu	c.s.	Verifica
SLV 14	12.05	-1104	-2821.77	0	0	0	No, e>l/2
SLV 14	14.15	-4507	2762.48	10316	3218.99	1.165	Si
SLV 9	12.05	-1865	-2668.98	0	0	0	No, e>l/2
SLV 9	14.15	-4195	2559.05	9603	3015.61	1.178	Si

Verifica a taglio nel piano secondo D.M. 17-01-18 (N.T.C.) §7.8.2.2.2 con rottura per scorrimento in combinazioni non sismiche, γM = 3

Comb.	Quota	N	V par	M	σ0	σN	l'	fvd	Vt scorr.	Vt fess.diag.	Vt,lim	c.s.	Verifica
SLU 37	12.05	-1953	-2230	-1537.19		0	0	5556	0			0	No, Vu<V
SLU 37	14.15	-2730	-2227	1207.98		9625	1.0132	6839	1940			0.87	No, Vu<V
SLU 39	12.05	-1537	-2508	-1676.02		0	0	5556	0			0	No, Vu<V
SLU 39	14.15	-2735	-2504	1324.82		11011	0.887	7024	1744			0.7	No, Vu<V
SLU 81	12.05	-2338	-2821	-1868.42		0	0	5556	0			0	No, Vu<V
SLU 81	14.15	-3371	-2817	1530.99		12312	0.9777	7197	1970			0.7	No, Vu<V
SLU 82	12.05	-2310	-2789	-1853.98		0	0	5556	0			0	No, Vu<V
SLU 82	14.15	-3316	-2780	1492.21		11958	0.9903	7150	1983			0.71	No, Vu<V
SLU 40	12.05	-1510	-2476	-1661.58		0	0	5556	0			0	No, Vu<V
SLU 40	14.15	-2680	-2467	1286.04		10626	0.9007	6972	1758			0.71	No, Vu<V
SLU 38	12.05	-1925	-2199	-1522.75		0	0	5556	0			0	No, Vu<V
SLU 38	14.15	-2676	-2190	1169.2		9282	1.0295	6793	1958			0.89	No, Vu<V
SLU 34	12.05	-1790	-2228	-1521.67		0	0	5556	0			0	No, Vu<V
SLU 34	14.15	-2619	-2216	1165.69		9306	1.0051	6796	1913			0.86	No, Vu<V
SLU 42	12.05	-1628	-2426	-1653.04		0	0	5556	0			0	No, Vu<V
SLU 42	14.15	-2700	-2416	1263.7		10298	0.9365	6929	1817			0.75	No, Vu<V
SLU 33	12.05	-1986	-2341	-1555.12		0	0	5556	0			0	No, Vu<V
SLU 33	14.15	-2974	-2332	1251.06		9849	1.0784	6869	2074			0.89	No, Vu<V
SLU 41	12.05	-1655	-2457	-1667.48		0	0	5556	0			0	No, Vu<V
SLU 41	14.15	-2755	-2453	1302.48		10671	0.9221	6978	1802			0.73	No, Vu<V

Verifica a taglio nel piano secondo D.M. 17-01-18 (N.T.C.) §7.8.2.2.2 con rottura per scorrimento in combinazioni sismiche, γM = 2

Comb.	Quota	N	V par	M	σ0	σN	l'	fvd	Vt scorr.	Vt fess.diag.	Vt,lim	c.s.	Verifica
SLV 7	12.05	-2524	658	385.48		5778	1.5603	9489	4145			6.3	Si
SLV 7	14.15	-724	781	-558.95		103316	0.025	16250	114			0.15	No, Vu<V
SLV 14	12.05	-1104	-5125	-2821.77		0	0	8333	0			0	No, Vu<V
SLV 14	14.15	-4507	-4211	2762.48		32096	0.5015	14752	2071			0.49	No, Vu<V
SLV 16	12.05	-1106	-4209	-2147.12		0	0	8333	0			0	No, Vu<V
SLV 16	14.15	-3767	-3035	2083.19		19743	0.6815	12282	2344			0.77	No, Vu<V
SLV 8	12.05	-2524	658	385.48		5778	1.5603	9489	4145			6.3	Si
SLV 8	14.15	-724	781	-558.95		103316	0.025	16250	114			0.15	No, Vu<V
SLV 9	12.05	-1865	-4149	-2668.98		0	0	8333	0			0	No, Vu<V
SLV 9	14.15	-4195	-4268	2559.05		29354	0.5104	14204	2030			0.48	No, Vu<V
SLV 10	12.05	-1865	-4149	-2668.98		0	0	8333	0			0	No, Vu<V
SLV 10	14.15	-4195	-4268	2559.05		29354	0.5104	14204	2030			0.48	No, Vu<V
SLV 4	12.05	-3285	1635	538.28		7519	1.5603	9837	4298			2.63	Si
SLV 4	14.15	-413	723	-762.39		0	0	8333	0			0	No, Vu<V
SLV 3	12.05	-3285	1635	538.28		7519	1.5603	9837	4298			2.63	Si
SLV 3	14.15	-413	723	-762.39		0	0	8333	0			0	No, Vu<V
SLV 13	12.05	-1104	-5125	-2821.77		0	0	8333	0			0	No, Vu<V
SLV 13	14.15	-4507	-4211	2762.48		32096	0.5015	14752	2071			0.49	No, Vu<V
SLV 15	12.05	-1106	-4209	-2147.12		0	0	8333	0			0	No, Vu<V
SLV 15	14.15	-3767	-3035	2083.19		19743	0.6815	12282	2344			0.77	No, Vu<V

Verifica a pressoflessione fuori piano D.M. 17-01-18 (N.T.C.)

quota 13.6 Wa 0.05 denominatore 8 γM = 2

Comb.	fd	Sa	σ0	N	M	Mc	Coeff.s.	Verifica
SLV 4	143750	0.53	0	-1171	170.06	0	0	No, e>t/2
SLV 3	143750	0.53	0	-1171	170.06	0	0	No, e>t/2
SLV 7	143750	0.53	3040	-1328	170.06	181.29	1.07	Si
SLV 8	143750	0.53	3040	-1328	170.06	181.29	1.07	Si
SLV 2	143750	0.53	4039	-1764	170.06	238.85	1.4	Si
SLV 1	143750	0.53	4039	-1764	170.06	238.85	1.4	Si
SLV 11	143750	0.53	4706	-2056	170.06	276.76	1.63	Si
SLV 12	143750	0.53	4706	-2056	170.06	276.76	1.63	Si
SLV 5	143750	0.53	7568	-3306	170.06	434.19	2.55	Si
SLV 6	143750	0.53	7568	-3306	170.06	434.19	2.55	Si

Verifica dei meccanismi locali di collasso con analisi cinematica lineare

forza di aggancio al piano = 0 quota mezzeria = 13.6 Wa = 0.05 Ta = 0.0573

Comb.	N top	N base	V orto	α0	M*	e*	a0*	aLim	Verifica
SLV 11	-884	-1870	52	0.047	301.8	0.891	0.75964	8.24559	No
SLV 12	-884	-1870	52	0.047	301.8	0.891	0.75964	8.24559	No
SLV 5	-283	-2518	-48	0.05	257.6	0.929	0.77485	8.24559	No
SLV 6	-283	-2518	-48	0.05	257.6	0.929	0.77485	8.24559	No
SLV 7	-791	-2524	43	0.051	294.1	0.893	0.82862	8.24559	No
SLV 8	-791	-2524	43	0.051	294.1	0.893	0.82862	8.24559	No
SLV 15	-814	-1106	30	0.058	295.9	0.893	0.93654	9.07197	No
SLV 16	-814	-1106	30	0.058	295.9	0.893	0.93654	9.07197	No
SLV 10	-375	-1865	-40	0.055	263.1	0.917	0.86604	8.24559	No
SLV 9	-375	-1865	-40	0.055	263.1	0.917	0.86604	8.24559	No

Tabella dei coefficienti di sicurezza minimi

Stato limite	Coeff.s.	Comb.	Verifica
PF_SLU	0	SLU 31	No
V_SLU	0	SLU 31	No
PF_SLV	0	SLV 3	No
V_SLV	0	SLV 3	No
PFFP_SLV	0	SLV 3	No
R_SLV	0.092	SLV 11	No

Maschio 225

Verifiche condotte secondo D.M. 17-01-18 (N.T.C.)

Dati geometrici

X ini.	Y ini.	X fin.	Y fin.	Quota i.	Quota.s	l	Sp.	h netta	h ini.	h fin.	a	a.s.,sx	a.s.,dx
-15.01	1.141	-15.01	1.423	L6	L7	0.282	0.14	3.1	3.1	3.1			

Caratteristiche del materiale

(Circolare 7 21-01-19 C8.5.I) Muratura in mattoni pieni e malta di calce LC2_Corti

fb	fk	fvk0	fmedio	τ0	fv0	μ	ϕ	fv,lim	E	G	FC
600000			345000	9000	20000	0.58	0.77	32500	320000000	128000000	1.2

Verifica a pressoflessione nel piano secondo D.M. 17-01-18 NTC §7.8.2.2.1 in combinazioni non sismiche, γM = 3

Comb.	Quota	N	M	σ0	Mu	c.s.	Verifica
SLU 53	12.05	-1839	115.48	46656	110.64	0.958	No, M>Mu
SLU 53	14.15	391	-94.72	0	0	0	No, Trazione
SLU 54	12.05	-1833	114.94	46502	110.76	0.964	No, M>Mu
SLU 54	14.15	391	-94.56	0	0	0	No, Trazione
SLU 55	12.05	-1792	113.67	45467	111.51	0.981	No, M>Mu
SLU 55	14.15	413	-93.92	0	0	0	No, Trazione
SLU 58	12.05	-1967	124.61	49902	107.3	0.861	No, M>Mu
SLU 58	14.15	442	-103.82	0	0	0	No, Trazione
SLU 61	12.05	-1675	109.12	42495	112.82	1.034	Si
SLU 61	14.15	427	-88.03	0	0	0	No, Trazione
SLU 57	12.05	-1998	124.98	50680	106.29	0.85	No, M>Mu
SLU 57	14.15	418	-104.19	0	0	0	No, Trazione
SLU 56	12.05	-2004	125.52	50835	106.08	0.845	No, M>Mu
SLU 56	14.15	419	-104.35	0	0	0	No, Trazione
SLU 60	12.05	-1681	109.66	42649	112.78	1.028	Si
SLU 60	14.15	427	-88.19	0	0	0	No, Trazione
SLU 59	12.05	-1961	124.07	49748	107.49	0.866	No, M>Mu
SLU 59	14.15	441	-103.66	0	0	0	No, Trazione
SLU 1	12.05	-1223	74.69	31022	106.61	1.427	Si
SLU 1	14.15	242	-61.15	0	0	0	No, Trazione

Verifica a pressoflessione nel piano secondo D.M. 17-01-18 NTC §7.8.2.2.1 in combinazioni sismiche, γM = 2

Comb.	Quota	N	M	σ0	Mu	c.s.	Verifica
SLV 2	12.05	-254	-49.91	0	0	0	No, e>l/2
SLV 2	14.15	-749	17.03	18987	89.01	5.225	Si
SLV 7	12.05	-3104	310.3	78724	155.43	0.501	No, M>Mu
SLV 7	14.15	1262	-114.31	0	0	0	No, Trazione
SLV 8	12.05	-3104	310.3	78724	155.43	0.501	No, M>Mu
SLV 8	14.15	1262	-114.31	0	0	0	No, Trazione
SLV 10	12.05	510	-146.53	0	0	0	No, Trazione
SLV 10	14.15	-682	-18.45	17295	82.41	4.466	Si
SLV 5	12.05	786	-181.36	0	0	0	No, Trazione
SLV 5	14.15	-1093	19.55	27728	118.98	6.086	Si
SLV 9	12.05	510	-146.53	0	0	0	No, Trazione
SLV 9	14.15	-682	-18.45	17295	82.41	4.466	Si
SLV 4	12.05	-1421	97.58	36043	141.04	1.445	Si
SLV 4	14.15	-42	-23.12	0	0	0	No, e>l/2
SLV 6	12.05	786	-181.36	0	0	0	No, Trazione
SLV 6	14.15	-1093	19.55	27728	118.98	6.086	Si
SLV 1	12.05	-254	-49.91	0	0	0	No, e>l/2
SLV 1	14.15	-749	17.03	18987	89.01	5.225	Si
SLV 3	12.05	-1421	97.58	36043	141.04	1.445	Si
SLV 3	14.15	-42	-23.12	0	0	0	No, e>l/2

Verifica a taglio nel piano secondo D.M. 17-01-18 (N.T.C.) §7.8.2.2.2 con rottura per scorrimento in combinazioni non sismiche, γM = 3

Comb.	Quota	N	V par	M	σ0	σN	l'	fvd	Vt scorr.	Vt fess.diag.	Vt,lim	c.s.	Verifica
SLU 61	12.05	-1675	253	109.12		52720	0.227	10833	344			1.36	Si
SLU 61	14.15	427	200	-88.03		0	0	5556	0			0	No, Vu<V
SLU 59	12.05	-1961	288	124.07		60227	0.2326	10833	353			1.22	Si
SLU 59	14.15	441	236	-103.66		0	0	5556	0			0	No, Vu<V
SLU 58	12.05	-1967	290	124.61		60476	0.2324	10833	352			1.22	Si
SLU 58	14.15	442	236	-103.82		0	0	5556	0			0	No, Vu<V
SLU 55	12.05	-1792	264	113.67		55155	0.2321	10833	352			1.34	Si
SLU 55	14.15	413	214	-93.92		0	0	5556	0			0	No, Vu<V
SLU 1	12.05	-1223	173	74.69		36525	0.2392	10426	349			2.01	Si
SLU 1	14.15	242	139	-61.15		0	0	5556	0			0	No, Vu<V
SLU 57	12.05	-1998	290	124.98		60798	0.2347	10833	356			1.23	Si
SLU 57	14.15	418	237	-104.19		0	0	5556	0			0	No, Vu<V
SLU 53	12.05	-1839	268	115.48		56136	0.234	10833	355			1.32	Si
SLU 53	14.15	391	215	-94.72		0	0	5556	0			0	No, Vu<V
SLU 56	12.05	-2004	292	125.52		61045	0.2345	10833	356			1.22	Si
SLU 56	14.15	419	237	-104.35		0	0	5556	0			0	No, Vu<V
SLU 60	12.05	-1681	254	109.66		52972	0.2267	10833	344			1.35	Si
SLU 60	14.15	427	201	-88.19		0	0	5556	0			0	No, Vu<V
SLU 54	12.05	-1833	267	114.94		55889	0.2343	10833	355			1.33	Si
SLU 54	14.15	391	215	-94.56		0	0	5556	0			0	No, Vu<V

Verifica a taglio nel piano secondo D.M. 17-01-18 (N.T.C.) §7.8.2.2.2 con rottura per scorrimento in combinazioni sismiche, γM = 2

Comb.	Quota	N	V par	M	σ0	σN	l'	fvd	Vt scorr.	Vt fess.diag.	Vt,lim	c.s.	Verifica
SLV 9	12.05	510	-568	-146.53		0	0	8333	0			0	No, Vu<V
SLV 9	14.15	-682	8	-18.45		17295	0.2816	11792	465			57.31	Si
SLV 10	12.05	510	-568	-146.53		0	0	8333	0			0	No, Vu<V
SLV 10	14.15	-682	8	-18.45		17295	0.2816	11792	465			57.31	Si
SLV 4	12.05	-1421	253	97.58		46910	0.2164	16250	492			1.95	Si

Comb.	Quota	N	V par	M	σ0	σN	l'	fvd	Vt scorr.	Vt fess.diag.	Vt,lim	c.s.	Verifica
SLV 4	14.15	-42	65	-23.12		0	0	8333	0			0	No, Vu<V
SLV 7	12.05	-3104	948	310.3		181055	0.1224	16250	279			0.29	No, Vu<V
SLV 7	14.15	1262	293	-114.31		0	0	8333	0			0	No, Vu<V
SLV 8	12.05	-3104	948	310.3		181055	0.1224	16250	279			0.29	No, Vu<V
SLV 8	14.15	1262	293	-114.31		0	0	8333	0			0	No, Vu<V
SLV 3	12.05	-1421	253	97.58		46910	0.2164	16250	492			1.95	Si
SLV 3	14.15	-42	65	-23.12		0	0	8333	0			0	No, Vu<V
SLV 5	12.05	786	-677	-181.36		0	0	8333	0			0	No, Vu<V
SLV 5	14.15	-1093	-77	19.55		27728	0.2816	13879	547			7.12	Si
SLV 1	12.05	-254	-235	-49.91		0	0	8333	0			0	No, Vu<V
SLV 1	14.15	-749	-46	17.03		18987	0.2816	12131	478			10.3	Si
SLV 6	12.05	786	-677	-181.36		0	0	8333	0			0	No, Vu<V
SLV 6	14.15	-1093	-77	19.55		27728	0.2816	13879	547			7.12	Si
SLV 2	12.05	-254	-235	-49.91		0	0	8333	0			0	No, Vu<V
SLV 2	14.15	-749	-46	17.03		18987	0.2816	12131	478			10.3	Si

Verifica a pressoflessione fuori piano D.M. 17-01-18 (N.T.C.)

quota 13.6 Wa 0.03 denominatore 8 γM = 2

Comb.	fd	Sa	σ0	N	M	Mc	Coeff.s.	Verifica
SLV 4	143750	0.53	0	-183	16.42	0	0	No, e>t/2
SLV 12	143750	0.53	0	991	16.42	0	0	No, Trazione
SLV 15	143750	0.53	0	607	16.42	0	0	No, Trazione
SLV 14	143750	0.53	0	41	16.42	0	0	No, Trazione
SLV 7	143750	0.53	0	754	16.42	0	0	No, Trazione
SLV 3	143750	0.53	0	-183	16.42	0	0	No, e>t/2
SLV 11	143750	0.53	0	991	16.42	0	0	No, Trazione
SLV 16	143750	0.53	0	607	16.42	0	0	No, Trazione
SLV 8	143750	0.53	0	754	16.42	0	0	No, Trazione
SLV 13	143750	0.53	0	41	16.42	0	0	No, Trazione

Verifica dei meccanismi locali di collasso con analisi cinematica lineare

forza di aggancio al piano = 0 quota mezzeria = 13.6 Wa = 0.03 Ta = 0.1146

Comb.	N top	N base	V orto	α0	M*	e*	a0*	aLim	Verifica
SLV 9	109	510	0	0	0	0	0	16.84384	No, Trazione
SLV 6	131	786	1	0	0	0	0	16.84384	No, Trazione
SLV 10	109	510	0	0	0	0	0	16.84384	No, Trazione
SLV 5	131	786	1	0	0	0	0	16.84384	No, Trazione
SLV 15	-241	-2339	-2	0.025	42.4	0.903	0.40756	19.30799	No
SLV 16	-241	-2339	-2	0.025	42.4	0.903	0.40756	19.30799	No
SLV 3	-168	-1421	1	0.027	35.3	0.893	0.44739	19.30799	No
SLV 4	-168	-1421	1	0.027	35.3	0.893	0.44739	19.30799	No
SLV 13	-91	-1172	-1	0.028	28.2	0.89	0.45831	19.30799	No
SLV 14	-91	-1172	-1	0.028	28.2	0.89	0.45831	19.30799	No

Tabella dei coefficienti di sicurezza minimi

Stato limite	Coeff.s.	Comb.	Verifica
PF_SLU	0	SLU 84	No
V_SLU	0	SLU 1	No
PF_SLV	0	SLV 16	No
V_SLV	0	SLV 1	No
PFFP_SLV	0	SLV 16	No
R_SLV	0	SLV 10	No

Maschio 226

Verifiche condotte secondo D.M. 17-01-18 (N.T.C.)

Dati geometrici

X ini.	Y ini.	X fin.	Y fin.	Quota i.	Quota.s	l	Sp.	h netta	h ini.	h fin.	a	a.s.,sx	a.s.,dx
-15.01	2.223	-15.01	6.64	L6	L7	4.417	0.14	3.1	3.1	3.1			

Caratteristiche del materiale

(Circolare 7 21-01-19 C8.5.I) Muratura in mattoni pieni e malta di calce LC2_Corti

fb	fk	fvk0	fmedio	τ0	fv0	μ	ϕ	fv,lim	E	G	FC
600000			345000	9000	20000	0.58	0.77	32500	320000000	128000000	1.2

Verifica a pressoflessione nel piano secondo D.M. 17-01-18 NTC §7.8.2.2.1 in combinazioni non sismiche, γM = 3

Comb.	Quota	N	M	σ0	Mu	c.s.	Verifica
SLU 39	12.05	-6704	818.37	10841	12836	15.685	Si
SLU 39	14.15	-3016	-2255.91	4877	6262.7	2.776	Si
SLU 83	12.05	-8318	1293.02	13450	15337.13	11.861	Si
SLU 83	14.15	-3880	-2801.59	6274	7908.85	2.823	Si
SLU 81	12.05	-8047	971.75	13012	14933.6	15.368	Si
SLU 81	14.15	-3676	-2692.82	5944	7526.64	2.795	Si
SLU 42	12.05	-6970	1142.05	11272	13264.82	11.615	Si
SLU 42	14.15	-3215	-2356.59	5198	6646.71	2.82	Si
SLU 82	12.05	-8043	974.15	13006	14927.41	15.323	Si
SLU 82	14.15	-3671	-2684.71	5936	7516.86	2.8	Si
SLU 18	12.05	-6024	705.27	9741	11713.29	16.608	Si
SLU 18	14.15	-2743	-2020.35	4436	5728.54	2.835	Si
SLU 31	12.05	-6466	802.95	10456	12448.11	15.503	Si
SLU 31	14.15	-2938	-2153.97	4751	6110.81	2.837	Si
SLU 40	12.05	-6700	820.78	10834	12829.32	15.631	Si
SLU 40	14.15	-3011	-2247.81	4869	6252.62	2.782	Si
SLU 41	12.05	-6975	1139.65	11278	13271.4	11.645	Si
SLU 41	14.15	-3220	-2364.69	5207	6656.69	2.815	Si

Comb.	Quota	N	M	σ0	Mu	c.s.	Verifica
SLU 84	12.05	-8313	1295.43	13443	15331.03	11.835	Si
SLU 84	14.15	-3875	-2793.49	6265	7899.16	2.828	Si

Verifica a pressoflessione nel piano secondo D.M. 17-01-18 NTC §7.8.2.2.1 in combinazioni sismiche, γM = 2

Comb.	Quota	N	M	σ0	Mu	c.s.	Verifica
SLV 7	12.05	-4833	3274.03	7816	9992.39	3.052	Si
SLV 7	14.15	-3097	-5884.4	5008	6559.36	1.115	Si
SLV 15	12.05	-6050	1799.79	9783	12292.13	6.83	Si
SLV 15	14.15	-3859	-4501.91	6240	8087.01	1.796	Si
SLV 6	12.05	-5998	-2088.29	9699	12195.32	5.84	Si
SLV 6	14.15	-1579	2973.6	2553	3413.89	1.148	Si
SLV 12	12.05	-5207	3459.83	8420	10707.44	3.095	Si
SLV 12	14.15	-3694	-6677.24	5973	7759.08	1.162	Si
SLV 9	12.05	-6371	-1902.49	10302	12884.96	6.773	Si
SLV 9	14.15	-2176	2180.77	3518	4666.57	2.14	Si
SLV 11	12.05	-5207	3459.83	8420	10707.44	3.095	Si
SLV 11	14.15	-3694	-6677.24	5973	7759.08	1.162	Si
SLV 5	12.05	-5998	-2088.29	9699	12195.32	5.84	Si
SLV 5	14.15	-1579	2973.6	2553	3413.89	1.148	Si
SLV 16	12.05	-6050	1799.79	9783	12292.13	6.83	Si
SLV 16	14.15	-3859	-4501.91	6240	8087.01	1.796	Si
SLV 8	12.05	-4833	3274.03	7816	9992.39	3.052	Si
SLV 8	14.15	-3097	-5884.4	5008	6559.36	1.115	Si
SLV 10	12.05	-6371	-1902.49	10302	12884.96	6.773	Si
SLV 10	14.15	-2176	2180.77	3518	4666.57	2.14	Si

Verifica a taglio nel piano secondo D.M. 17-01-18 (N.T.C.) §7.8.2.2.2 con rottura per scorrimento in combinazioni non sismiche, γM = 3

Comb.	Quota	N	V par	M	σ0	σN	l'	fvd	Vt scorr.	Vt fess.diag.	Vt,lim	c.s.	Verifica
SLU 72	12.05	-7814	-133	1551.93		12636	4.4172	7240	4478			33.58	Si
SLU 72	14.15	-3847	-135	-2607.47		6221	4.4172	6385	3949			29.32	Si
SLU 79	12.05	-8357	-132	1594.87		13514	4.4172	7357	4550			34.58	Si
SLU 79	14.15	-4014	-133	-2821.93		6491	4.4172	6421	3971			29.8	Si
SLU 49	12.05	-7394	-132	1390.07		11956	4.4172	7150	4421			33.57	Si
SLU 49	14.15	-3698	-133	-2426.22		5980	4.4172	6353	3929			29.61	Si
SLU 50	12.05	-7138	-137	1436.43		11543	4.4172	7095	4387			31.97	Si
SLU 50	14.15	-3579	-138	-2380.01		5787	4.4172	6327	3913			28.31	Si
SLU 71	12.05	-7818	-136	1549.53		12643	4.4172	7241	4478			32.86	Si
SLU 71	14.15	-3852	-138	-2615.58		6229	4.4172	6386	3949			28.72	Si
SLU 59	12.05	-7673	-130	1484.17		12408	4.4172	7210	4459			34.39	Si
SLU 59	14.15	-3736	-131	-2578.27		6041	4.4172	6361	3934			30.02	Si
SLU 51	12.05	-7134	-134	1438.84		11536	4.4172	7094	4387			32.66	Si
SLU 51	14.15	-3574	-135	-2371.91		5779	4.4172	6326	3912			28.91	Si
SLU 58	12.05	-7677	-133	1481.77		12414	4.4172	7211	4459			33.63	Si
SLU 58	14.15	-3741	-134	-2586.37		6049	4.4172	6362	3934			29.38	Si
SLU 69	12.05	-8078	-134	1500.76		13063	4.4172	7297	4513			33.76	Si
SLU 69	14.15	-3977	-135	-2669.88		6430	4.4172	6413	3966			29.4	Si
SLU 48	12.05	-7398	-135	1387.66		11963	4.4172	7151	4422			32.84	Si
SLU 48	14.15	-3704	-136	-2434.32		5989	4.4172	6354	3929			28.99	Si

Verifica a taglio nel piano secondo D.M. 17-01-18 (N.T.C.) §7.8.2.2.2 con rottura per scorrimento in combinazioni sismiche, γM = 2

Comb.	Quota	N	V par	M	σ0	σN	l'	fvd	Vt scorr.	Vt fess.diag.	Vt,lim	c.s.	Verifica
SLV 11	12.05	-5207	4245	3459.83		8420	4.4172	10017	6195			1.46	Si
SLV 11	14.15	-3694	2841	-6677.24		21939	1.2026	12721	2142			0.75	No, Vu<V
SLV 6	12.05	-5998	-4386	-2088.29		9699	4.4172	10273	6353			1.45	Si
SLV 6	14.15	-1579	-2983	2973.6		11564	0.9751	10646	1453			0.49	No, Vu<V
SLV 12	12.05	-5207	4245	3459.83		8420	4.4172	10017	6195			1.46	Si
SLV 12	14.15	-3694	2841	-6677.24		21939	1.2026	12721	2142			0.75	No, Vu<V
SLV 8	12.05	-4833	4683	3274.03		7816	4.4172	9897	6120			1.31	Si
SLV 8	14.15	-3097	2762	-5884.4		23903	0.9254	13114	1699			0.62	No, Vu<V
SLV 9	12.05	-6371	-4824	-1902.49		10302	4.4172	10394	6428			1.33	Si
SLV 9	14.15	-2176	-2905	2180.77		4294	3.6186	9192	4657			1.6	Si
SLV 7	12.05	-4833	4683	3274.03		7816	4.4172	9897	6120			1.31	Si
SLV 7	14.15	-3097	2762	-5884.4		23903	0.9254	13114	1699			0.62	No, Vu<V
SLV 5	12.05	-5998	-4386	-2088.29		9699	4.4172	10273	6353			1.45	Si
SLV 5	14.15	-1579	-2983	2973.6		11564	0.9751	10646	1453			0.49	No, Vu<V
SLV 10	12.05	-6371	-4824	-1902.49		10302	4.4172	10394	6428			1.33	Si
SLV 10	14.15	-2176	-2905	2180.77		4294	3.6186	9192	4657			1.6	Si
SLV 13	12.05	-6399	-2161	191.1		10348	4.4172	10403	6433			2.98	Si
SLV 13	14.15	-3403	-802	-1844.51		5503	4.4172	9434	5834			7.27	Si
SLV 14	12.05	-6399	-2161	191.1		10348	4.4172	10403	6433			2.98	Si
SLV 14	14.15	-3403	-802	-1844.51		5503	4.4172	9434	5834			7.27	Si

Verifica a pressoflessione fuori piano D.M. 17-01-18 (N.T.C.)

quota 13.6 Wa 0.03 denominatore 8 γM = 2

Comb.	fd	Sa	σ0	N	M	Mc	Coeff.s.	Verifica
SLV 7	143750	0.53	0	-3606	257.52	0	0	No, e>t/2
SLV 3	143750	0.53	0	-2710	257.52	0	0	No, e>t/2
SLV 4	143750	0.53	0	-2710	257.52	0	0	No, e>t/2
SLV 1	143750	0.53	0	-2365	257.52	0	0	No, e>t/2
SLV 6	143750	0.53	0	-2454	257.52	0	0	No, e>t/2
SLV 8	143750	0.53	0	-3606	257.52	0	0	No, e>t/2
SLV 9	143750	0.53	0	-2876	257.52	0	0	No, e>t/2
SLV 5	143750	0.53	0	-2454	257.52	0	0	No, e>t/2
SLV 10	143750	0.53	0	-2876	257.52	0	0	No, e>t/2
SLV 2	143750	0.53	0	-2365	257.52	0	0	No, e>t/2

Verifica dei meccanismi locali di collasso con analisi cinematica lineare

forza di aggancio al piano = 0 quota mezzeria = 13.6 Wa = 0.03 Ta = 0.1146

Comb.	N top	N base	V orto	α0	M*	e*	a0*	aLim	Verifica

Comb.	N top	N base	V orto	α0	M*	e*	a0*	aLim	Verifica
SLV 14	36	-6399	5	0	0	0	0	19.30799	No, Trazione
SLV 11	453	-5207	11	0	0	0	0	16.84384	No, Trazione
SLV 13	36	-6399	5	0	0	0	0	19.30799	No, Trazione
SLV 7	261	-4833	6	0	0	0	0	16.84384	No, Trazione
SLV 12	453	-5207	11	0	0	0	0	16.84384	No, Trazione
SLV 8	261	-4833	6	0	0	0	0	16.84384	No, Trazione
SLV 15	332	-6050	10	0	0	0	0	19.30799	No, Trazione
SLV 16	332	-6050	10	0	0	0	0	19.30799	No, Trazione
SLV 1	-604	-5155	-10	0.035	377.1	0.912	0.55493	19.30799	No
SLV 2	-604	-5155	-10	0.035	377.1	0.912	0.55493	19.30799	No

Tabella dei coefficienti di sicurezza minimi

Stato limite	Coeff.s.	Comb.	Verifica
PF_SLU	2.776	SLU 39	Si
V_SLU	28.313	SLU 50	Si
PF_SLV	1.115	SLV 7	Si
V_SLV	0.487	SLV 5	No
PFFP_SLV	0	SLV 1	No
R_SLV	0	SLV 16	No

Maschio 227

Verifiche condotte secondo D.M. 17-01-18 (N.T.C.)

Dati geometrici

X ini.	Y ini.	X fin.	Y fin.	Quota i.	Quota.s	l	Sp.	h netta	h ini.	h fin.	a	a.s.,sx	a.s.,dx
-13.727	-3.323	-13.727	0	L6	L7	3.323	0.28	3.1	3.1	3.1			

Caratteristiche del materiale

(Circolare 7 21-01-19 C8.5.I) Muratura in mattoni pieni e malta di calce LC2_Corti

fb	fk	fvk0	fmedio	τ0	fv0	μ	ϕ	fv,lim	E	G	FC
600000			345000	9000	20000	0.58	0.77	32500	320000000	128000000	1.2

Verifica a pressoflessione nel piano secondo D.M. 17-01-18 NTC §7.8.2.2.1 in combinazioni non sismiche, γM = 3

Comb.	Quota	N	M	σ0	Mu	c.s.	Verifica
SLU 50	12.05	-10940	-1094.37	11758	15553.54	14.212	Si
SLU 50	14.15	-4663	2145.14	5011	7270.52	3.389	Si
SLU 37	12.05	-9995	-1432.57	10742	14416.65	10.063	Si
SLU 37	14.15	-4303	2092.13	4624	6742.9	3.223	Si
SLU 8	12.05	-8737	-969.72	9390	12843.32	13.244	Si
SLU 8	14.15	-3763	1853.41	4044	5941.57	3.206	Si
SLU 71	12.05	-11747	-1310.02	12625	16492.7	12.59	Si
SLU 71	14.15	-5042	2372.45	5419	7819.63	3.296	Si
SLU 27	12.05	-9823	-1193.32	10558	14206.42	11.905	Si
SLU 27	14.15	-4368	1978.95	4695	6839.98	3.456	Si
SLU 16	12.05	-9188	-1216.92	9875	13415.53	11.024	Si
SLU 16	14.15	-3924	1864.81	4217	6181.51	3.315	Si
SLU 30	12.05	-9514	-1072.18	10225	13823.01	12.892	Si
SLU 30	14.15	-4085	1863.53	4391	6421.77	3.446	Si
SLU 29	12.05	-9544	-1185.38	10257	13860.4	11.693	Si
SLU 29	14.15	-4142	2080.73	4451	6505.64	3.127	Si
SLU 79	12.05	-12198	-1557.21	13110	17005.38	10.92	Si
SLU 79	14.15	-5202	2383.85	5591	8050.55	3.377	Si
SLU 58	12.05	-11391	-1341.56	12243	16082.18	11.988	Si
SLU 58	14.15	-4823	2156.53	5184	7504.12	3.48	Si

Verifica a pressoflessione nel piano secondo D.M. 17-01-18 NTC §7.8.2.2.1 in combinazioni sismiche, γM = 2

Comb.	Quota	N	M	σ0	Mu	c.s.	Verifica
SLV 2	12.05	-10072	-2566.9	10824	15251.58	5.942	Si
SLV 2	14.15	-5262	3622.16	5655	8338.09	2.302	Si
SLV 8	12.05	-7024	3267.48	7549	10949.61	3.351	Si
SLV 8	14.15	-1130	-2699.43	0	0	0	No, e>l/2
SLV 12	12.05	-6492	3572.57	6978	10171.11	2.847	Si
SLV 12	14.15	-614	-3316.94	0	0	0	No, e>l/2
SLV 11	12.05	-6492	3572.57	6978	10171.11	2.847	Si
SLV 11	14.15	-614	-3316.94	0	0	0	No, e>l/2
SLV 9	12.05	-10226	-4855.83	10991	15462.73	3.184	Si
SLV 9	14.15	-6044	5300.26	6495	9507.69	1.794	Si
SLV 7	12.05	-7024	3267.48	7549	10949.61	3.351	Si
SLV 7	14.15	-1130	-2699.43	0	0	0	No, e>l/2
SLV 1	12.05	-10072	-2566.9	10824	15251.58	5.942	Si
SLV 1	14.15	-5262	3622.16	5655	8338.09	2.302	Si
SLV 6	12.05	-10758	-5160.91	11562	16183.19	3.136	Si
SLV 6	14.15	-6560	5917.76	7050	10270.45	1.736	Si
SLV 10	12.05	-10226	-4855.83	10991	15462.73	3.184	Si
SLV 10	14.15	-6044	5300.26	6495	9507.69	1.794	Si
SLV 5	12.05	-10758	-5160.91	11562	16183.19	3.136	Si
SLV 5	14.15	-6560	5917.76	7050	10270.45	1.736	Si

Verifica a taglio nel piano secondo D.M. 17-01-18 (N.T.C.) §7.8.2.2.2 con rottura per scorrimento in combinazioni non sismiche, γM = 3

Comb.	Quota	N	V par	M	σ0	σN	l'	fvd	Vt scorr.	Vt fess.diag.	Vt,lim	c.s.	Verifica
SLU 71	12.05	-11747	-442	-1310.02		12625	3.323	7239	6735			15.25	Si
SLU 71	14.15	-5042	-278	2372.45		5419	3.323	6278	5841			20.98	Si
SLU 29	12.05	-9544	-398	-1185.38		10257	3.323	6923	6442			16.2	Si
SLU 29	14.15	-4142	-272	2080.73		4451	3.323	6149	5721			21.03	Si
SLU 31	12.05	-9473	361	-936.11		10182	3.323	6913	6432			17.83	Si

Comb.	Quota	N	V par	M	σ0	σN	l'	fvd	Vt scorr.	Vt fess.diag.	Vt,lim	c.s.	Verifica
SLU 31	14.15	-3878	338	1108.92		4168	3.323	6111	5686			16.8	Si
SLU 48	12.05	-11220	-404	-1102.31		12059	3.323	7163	6665			16.51	Si
SLU 48	14.15	-4889	-206	2043.35		5255	3.323	6256	5821			28.2	Si
SLU 6	12.05	-9017	-360	-977.67		9691	3.323	6848	6371			17.71	Si
SLU 6	14.15	-3989	-200	1751.63		4288	3.323	6127	5701			28.49	Si
SLU 8	12.05	-8737	-416	-969.72		9390	3.323	6808	6334			15.21	Si
SLU 8	14.15	-3763	-305	1853.41		4044	3.323	6095	5671			18.57	Si
SLU 58	12.05	-11391	-377	-1341.56		12243	3.323	7188	6688			17.74	Si
SLU 58	14.15	-4823	-232	2156.53		5184	3.323	6247	5812			25.01	Si
SLU 50	12.05	-10940	-461	-1094.37		11758	3.323	7123	6628			14.39	Si
SLU 50	14.15	-4663	-312	2145.14		5011	3.323	6224	5791			18.58	Si
SLU 73	12.05	-11677	317	-1060.76		12549	3.323	7229	6726			21.24	Si
SLU 73	14.15	-4778	332	1400.64		5135	3.323	6240	5806			17.48	Si
SLU 69	12.05	-12027	-385	-1317.96		12926	3.323	7279	6773			17.59	Si
SLU 69	14.15	-5268	-173	2270.67		5662	3.323	6311	5872			33.92	Si

Verifica a taglio nel piano secondo D.M. 17-01-18 (N.T.C.) §7.8.2.2.2 con rottura per scorrimento in combinazioni sismiche, γM = 2

Comb.	Quota	N	V par	M	σ0	σN	l'	fvd	Vt scorr.	Vt fess.diag.	Vt,lim	c.s.	Verifica
SLV 11	12.05	-6492	5822	3572.57		6978	3.323	9729	9052			1.55	Si
SLV 11	14.15	-614	3563	-3316.94		0	0	8333	0			0	No, Vu<V
SLV 12	12.05	-6492	5822	3572.57		6978	3.323	9729	9052			1.55	Si
SLV 12	14.15	-614	3563	-3316.94		0	0	8333	0			0	No, Vu<V
SLV 6	12.05	-10758	-6015	-5160.91		11562	3.323	10646	9905			1.65	Si
SLV 6	14.15	-6560	-3465	5917.76		10284	2.2782	10390	6628			1.91	Si
SLV 10	12.05	-10226	-5488	-4855.83		10991	3.323	10531	9799			1.79	Si
SLV 10	14.15	-6044	-3117	5300.26		9171	2.3535	10168	6700			2.15	Si
SLV 8	12.05	-7024	5295	3267.48		7549	3.323	9843	9159			1.73	Si
SLV 8	14.15	-1130	3215	-2699.43		0	0	8333	0			0	No, Vu<V
SLV 2	12.05	-10072	-2671	-2566.9		10824	3.323	10498	9768			3.66	Si
SLV 2	14.15	-5262	-1533	3622.16		6437	2.9194	9621	7864			5.13	Si
SLV 9	12.05	-10226	-5488	-4855.83		10991	3.323	10531	9799			1.79	Si
SLV 9	14.15	-6044	-3117	5300.26		9171	2.3535	10168	6700			2.15	Si
SLV 5	12.05	-10758	-6015	-5160.91		11562	3.323	10646	9905			1.65	Si
SLV 5	14.15	-6560	-3465	5917.76		10284	2.2782	10390	6628			1.91	Si
SLV 7	12.05	-7024	5295	3267.48		7549	3.323	9843	9159			1.73	Si
SLV 7	14.15	-1130	3215	-2699.43		0	0	8333	0			0	No, Vu<V
SLV 1	12.05	-10072	-2671	-2566.9		10824	3.323	10498	9768			3.66	Si
SLV 1	14.15	-5262	-1533	3622.16		6437	2.9194	9621	7864			5.13	Si

Verifica a pressoflessione fuori piano D.M. 17-01-18 (N.T.C.)

quota 13.6 Wa 0.05 denominatore 8 γM = 2

Comb.	fd	Sa	σ0	N	M	Mc	Coeff.s.	Verifica
SLV 12	143750	0.53	0	-2263	370.61	0	0	No, e>t/2
SLV 11	143750	0.53	0	-2263	370.61	0	0	No, e>t/2
SLV 8	143750	0.53	3012	-2803	370.61	382.72	1.03	Si
SLV 7	143750	0.53	3012	-2803	370.61	382.72	1.03	Si
SLV 15	143750	0.53	3593	-3343	370.61	454.31	1.23	Si
SLV 16	143750	0.53	3593	-3343	370.61	454.31	1.23	Si
SLV 14	143750	0.53	5169	-4810	370.61	644.87	1.74	Si
SLV 13	143750	0.53	5169	-4810	370.61	644.87	1.74	Si
SLV 3	143750	0.53	5528	-5144	370.61	687.52	1.86	Si
SLV 4	143750	0.53	5528	-5144	370.61	687.52	1.86	Si

Verifica dei meccanismi locali di collasso con analisi cinematica lineare

forza di aggancio al piano = 0 quota mezzeria = 13.6 Wa = 0.05 Ta = 0.0573

Comb.	N top	N base	V orto	α0	M*	e*	a0*	aLim	Verifica
SLV 15	-175	-7179	-109	0.048	531.4	0.971	0.71934	9.07197	No
SLV 16	-175	-7179	-109	0.048	531.4	0.971	0.71934	9.07197	No
SLV 2	-669	-10072	106	0.049	552.5	0.925	0.76623	9.07197	No
SLV 1	-669	-10072	106	0.049	552.5	0.925	0.76623	9.07197	No
SLV 13	-319	-8299	-101	0.051	535.7	0.954	0.77482	9.07197	No
SLV 14	-319	-8299	-101	0.051	535.7	0.954	0.77482	9.07197	No
SLV 3	-525	-8951	97	0.052	544.7	0.935	0.80288	9.07197	No
SLV 4	-525	-8951	97	0.052	544.7	0.935	0.80288	9.07197	No
SLV 12	-130	-6492	-47	0.071	530.5	0.978	1.05487	8.24559	No
SLV 11	-130	-6492	-47	0.071	530.5	0.978	1.05487	8.24559	No

Tabella dei coefficienti di sicurezza minimi

Stato limite	Coeff.s.	Comb.	Verifica
PF_SLU	3.127	SLU 29	Si
V_SLU	14.391	SLU 50	Si
PF_SLV	0	SLV 7	No
V_SLV	0	SLV 7	No
PFFP_SLV	0	SLV 11	No
R_SLV	0.079	SLV 15	No

Maschio 228

Verifiche condotte secondo D.M. 17-01-18 (N.T.C.)

Dati geometrici

X ini.	Y ini.	X fin.	Y fin.	Quota i.	Quota.s	l	Sp.	h netta	h ini.	h fin.	a	a.s.,sx	a.s.,dx
-19.663	6.64	-17.793	6.64	L6	L7	1.87	0.28	3.1	3.1	3.1			

Caratteristiche del materiale

(Circolare 7 21-01-19 C8.5.I) Muratura in mattoni pieni e malta di calce LC2_Corti

fb	fk	fvk0	fmedio	τ0	fv0	μ	ϕ	fv,lim	E	G	FC
600000			345000	9000	20000	0.58	0.77	32500	320000000	128000000	1.2

Verifica a pressoflessione nel piano secondo D.M. 17-01-18 NTC §7.8.2.2.1 in combinazioni non sismiche, γM = 3

Comb.	Quota	N	M	σ0	Mu	c.s.	Verifica
SLU 8	12.95	-4178	163.81	7979	3523.2	21.507	Si
SLU 8	14.85	-2371	1075.78	4528	2093.36	1.946	Si
SLU 30	12.95	-4326	123.9	8262	3634	29.331	Si
SLU 30	14.85	-2576	1161.27	4921	2263.15	1.949	Si
SLU 72	12.95	-5262	160.19	10051	4312.9	26.923	Si
SLU 72	14.85	-2973	1297.52	5678	2585.65	1.993	Si
SLU 37	12.95	-4204	22.63	8030	3543.22	156.565	Si
SLU 37	14.85	-2570	1144.43	4908	2257.88	1.973	Si
SLU 29	12.95	-4334	117.15	8278	3640.13	31.074	Si
SLU 29	14.85	-2578	1162.36	4923	2264.34	1.948	Si
SLU 17	12.95	-4040	76.05	7716	3419.17	44.96	Si
SLU 17	14.85	-2362	1056.77	4511	2085.63	1.974	Si
SLU 16	12.95	-4048	69.3	7732	3425.4	49.429	Si
SLU 16	14.85	-2363	1057.85	4513	2086.83	1.973	Si
SLU 71	12.95	-5271	153.44	10067	4318.68	28.145	Si
SLU 71	14.85	-2974	1298.61	5681	2586.81	1.992	Si
SLU 38	12.95	-4196	29.38	8014	3537.05	120.382	Si
SLU 38	14.85	-2568	1143.35	4906	2256.7	1.974	Si
SLU 9	12.95	-4169	170.56	7964	3517.02	20.62	Si
SLU 9	14.85	-2369	1074.69	4526	2092.16	1.947	Si

Verifica a pressoflessione nel piano secondo D.M. 17-01-18 NTC §7.8.2.2.1 in combinazioni sismiche, γM = 2

Comb.	Quota	N	M	σ0	Mu	c.s.	Verifica
SLV 4	12.95	-1508	-2060.12	0	0	0	No, e>l/2
SLV 4	14.85	-2448	1584.1	4676	2201.09	1.389	Si
SLV 1	12.95	-3158	-2189.25	6032	2806.69	1.282	Si
SLV 1	14.85	-2363	1476.38	4512	2127.25	1.441	Si
SLV 11	12.95	-851	888.14	0	0	0	No, e>l/2
SLV 11	14.85	-1520	465.01	2904	1387.69	2.984	Si
SLV 12	12.95	-851	888.14	0	0	0	No, e>l/2
SLV 12	14.85	-1520	465.01	2904	1387.69	2.984	Si
SLV 7	12.95	-265	-403.07	0	0	0	No, e>l/2
SLV 7	14.85	-1994	1039.52	3809	1806.57	1.738	Si
SLV 15	12.95	-3459	2243.89	6607	3059.37	1.363	Si
SLV 15	14.85	-868	-330.92	1657	800.2	2.418	Si
SLV 2	12.95	-3158	-2189.25	6032	2806.69	1.282	Si
SLV 2	14.85	-2363	1476.38	4512	2127.25	1.441	Si
SLV 16	12.95	-3459	2243.89	6607	3059.37	1.363	Si
SLV 16	14.85	-868	-330.92	1657	800.2	2.418	Si
SLV 3	12.95	-1508	-2060.12	0	0	0	No, e>l/2
SLV 3	14.85	-2448	1584.1	4676	2201.09	1.389	Si
SLV 8	12.95	-265	-403.07	0	0	0	No, e>l/2
SLV 8	14.85	-1994	1039.52	3809	1806.57	1.738	Si

Verifica a taglio nel piano secondo D.M. 17-01-18 (N.T.C.) §7.8.2.2.2 con rottura per scorrimento in combinazioni non sismiche, γM = 3

Comb.	Quota	N	V par	M	σ0	σN	l'	fvd	Vt scorr.	Vt fess.diag.	Vt,lim	c.s.	Verifica
SLU 38	12.95	-4196	-670	29.38		8014	1.8699	6624	3468			5.17	Si
SLU 38	14.85	-2568	-739	1143.35		6243	1.4693	6388	2628			3.56	Si
SLU 78	12.95	-5485	-763	107.16		10475	1.8699	6952	3640			4.77	Si
SLU 78	14.85	-3381	-839	1341.56		7480	1.6145	6553	2962			3.53	Si
SLU 80	12.95	-5133	-720	65.68		9804	1.8699	6863	3593			4.99	Si
SLU 80	14.85	-2965	-796	1279.6		7012	1.5101	6491	2744			3.45	Si
SLU 36	12.95	-4548	-713	70.86		8686	1.8699	6714	3515			4.93	Si
SLU 36	14.85	-2985	-781	1205.31		6690	1.5933	6448	2876			3.68	Si
SLU 35	12.95	-4556	-714	64.11		8702	1.8699	6716	3516			4.93	Si
SLU 35	14.85	-2986	-782	1206.4		6696	1.5928	6448	2876			3.68	Si
SLU 83	12.95	-4647	-671	-29.65		8876	1.8699	6739	3528			5.26	Si
SLU 83	14.85	-2557	-739	1011.67		5644	1.6177	6308	2857			3.86	Si
SLU 79	12.95	-5141	-720	58.93		9819	1.8699	6865	3594			4.99	Si
SLU 79	14.85	-2966	-797	1280.68		7018	1.5096	6491	2744			3.44	Si
SLU 84	12.95	-4639	-671	-22.9		8860	1.8699	6737	3527			5.26	Si
SLU 84	14.85	-2555	-739	1010.58		5639	1.6183	6307	2858			3.87	Si
SLU 77	12.95	-5493	-763	100.41		10491	1.8699	6954	3641			4.77	Si
SLU 77	14.85	-3383	-839	1342.65		7485	1.614	6554	2962			3.53	Si
SLU 37	12.95	-4204	-671	22.63		8030	1.8699	6626	3469			5.17	Si
SLU 37	14.85	-2570	-740	1144.43		6249	1.4688	6389	2627			3.55	Si

Verifica a taglio nel piano secondo D.M. 17-01-18 (N.T.C.) §7.8.2.2.2 con rottura per scorrimento in combinazioni sismiche, γM = 2

Comb.	Quota	N	V par	M	σ0	σN	l'	fvd	Vt scorr.	Vt fess.diag.	Vt,lim	c.s.	Verifica
SLV 11	12.95	-851	-365	888.14		0	0	8333	0			0	No, Vu<V
SLV 11	14.85	-1520	-753	465.01		2904	1.8699	8914	4667			6.2	Si
SLV 8	12.95	-265	-2189	-403.07		0	0	8333	0			0	No, Vu<V
SLV 8	14.85	-1994	-1976	1039.52		5739	1.2412	9481	3295			1.67	Si
SLV 2	12.95	-3158	-3104	-2189.25		15556	0.725	11445	2323			0.75	No, Vu<V
SLV 2	14.85	-2363	-2126	1476.38		9072	0.9301	10148	2643			1.24	Si
SLV 7	12.95	-265	-2189	-403.07		0	0	8333	0			0	No, Vu<V
SLV 7	14.85	-1994	-1976	1039.52		5739	1.2412	9481	3295			1.67	Si
SLV 15	12.95	-3459	2417	2243.89		14385	0.8589	11210	2696			1.12	Si
SLV 15	14.85	-868	1362	-330.92		1866	1.6606	8707	4048			2.97	Si
SLV 3	12.95	-1508	-3664	-2060.12		0	0	8333	0			0	No, Vu<V
SLV 3	14.85	-2448	-2715	1584.1		10125	0.8635	10358	2504			0.92	No, Vu<V
SLV 1	12.95	-3158	-3104	-2189.25		15556	0.725	11445	2323			0.75	No, Vu<V
SLV 1	14.85	-2363	-2126	1476.38		9072	0.9301	10148	2643			1.24	Si
SLV 12	12.95	-851	-365	888.14		0	0	8333	0			0	No, Vu<V
SLV 12	14.85	-1520	-753	465.01		2904	1.8699	8914	4667			6.2	Si

Comb.	Quota	N	V par	M	σ0	σN	l'	fvd	Vt scorr.	Vt fess.diag.	Vt,lim	c.s.	Verifica
SLV 16	12.95	-3459	2417	2243.89		14385	0.8589	11210	2696			1.12	Si
SLV 16	14.85	-868	1362	-330.92		1866	1.6606	8707	4048			2.97	Si
SLV 4	12.95	-1508	-3664	-2060.12		0	0	8333	0			0	No, Vu<V
SLV 4	14.85	-2448	-2715	1584.1		10125	0.8635	10358	2504			0.92	No, Vu<V

Verifica a pressoflessione fuori piano D.M. 17-01-18 (N.T.C.)

quota 13.6 Wa 0.05 denominatore 8 γM = 2

Comb.	fd	Sa	σ0	N	M	Mc	Coeff.s.	Verifica
SLV 8	143750	0.53	0	-993	203.8	0	0	No, e>t/2
SLV 12	143750	0.53	0	-915	203.8	0	0	No, e>t/2
SLV 11	143750	0.53	0	-915	203.8	0	0	No, e>t/2
SLV 7	143750	0.53	0	-993	203.8	0	0	No, e>t/2
SLV 15	143750	0.53	3710	-1942	203.8	263.68	1.29	Si
SLV 16	143750	0.53	3710	-1942	203.8	263.68	1.29	Si
SLV 3	143750	0.53	4206	-2202	203.8	297.68	1.46	Si
SLV 4	143750	0.53	4206	-2202	203.8	297.68	1.46	Si
SLV 13	143750	0.53	5541	-2901	203.8	387.7	1.9	Si
SLV 14	143750	0.53	5541	-2901	203.8	387.7	1.9	Si

Verifica dei meccanismi locali di collasso con analisi cinematica lineare

forza di aggancio al piano = 0 quota mezzeria = 13.6 Wa = 0.05 Ta = 0.0573

Comb.	N top	N base	V orto	α0	M*	e*	a0*	aLim	Verifica
SLV 16	-1048	-3927	-11	0.067	360.8	0.892	1.09614	9.07197	No
SLV 15	-1048	-3927	-11	0.067	360.8	0.892	1.09614	9.07197	No
SLV 11	-902	-1470	-27	0.061	348.6	0.894	0.99834	8.24559	No
SLV 12	-902	-1470	-27	0.061	348.6	0.894	0.99834	8.24559	No
SLV 7	-854	-951	-27	0.062	344.7	0.896	1.00303	8.24559	No
SLV 8	-854	-951	-27	0.062	344.7	0.896	1.00303	8.24559	No
SLV 10	-1158	-6757	21	0.062	370.2	0.89	1.01651	8.24559	No
SLV 9	-1158	-6757	21	0.062	370.2	0.89	1.01651	8.24559	No
SLV 4	-886	-2195	-10	0.069	347.4	0.895	1.11881	9.07197	No
SLV 3	-886	-2195	-10	0.069	347.4	0.895	1.11881	9.07197	No

Tabella dei coefficienti di sicurezza minimi

Stato limite	Coeff.s.	Comb.	Verifica
PF_SLU	1.946	SLU 8	Si
V_SLU	3.443	SLU 79	Si
PF_SLV	0	SLV 3	No
V_SLV	0	SLV 3	No
PFFP_SLV	0	SLV 7	No
R_SLV	0.121	SLV 15	No

Maschio 229

Verifiche condotte secondo D.M. 17-01-18 (N.T.C.)

Dati geometrici

X ini.	Y ini.	X fin.	Y fin.	Quota i.	Quota.s	l	Sp.	h netta	h ini.	h fin.	a	a.s.,sx	a.s.,dx
-16.793	6.64	-12.868	6.64	L6	L7	3.925	0.28	3.1	3.1	3.1			

Caratteristiche del materiale

(Circolare 7 21-01-19 C8.5.I) Muratura in mattoni pieni e malta di calce LC2_Corti

fb	fk	fvk0	fmedio	τ0	fv0	μ	ϕ	fv,lim	E	G	FC
600000			345000	9000	20000	0.58	0.77	32500	320000000	128000000	1.2

Verifica a pressoflessione nel piano secondo D.M. 17-01-18 NTC §7.8.2.2.1 in combinazioni non sismiche, γM = 3

Comb.	Quota	N	M	σ0	Mu	c.s.	Verifica
SLU 35	12.95	-11372	314.03	10347	19482.12	62.04	Si
SLU 35	14.85	-8883	-1498.07	8083	15702.94	10.482	Si
SLU 7	12.95	-10933	-122.91	9948	18835.09	153.24	Si
SLU 7	14.85	-8218	-1395.85	7478	14647.24	10.493	Si
SLU 77	12.95	-13392	322.26	12186	22350.24	69.354	Si
SLU 77	14.85	-9938	-1652.48	9043	17338.92	10.493	Si
SLU 78	12.95	-13397	336	12190	22357.22	66.539	Si
SLU 78	14.85	-9941	-1656	9045	17342.53	10.473	Si
SLU 28	12.95	-11518	45.91	10480	19695.53	429.031	Si
SLU 28	14.85	-8891	-1513.66	8090	15715.34	10.382	Si
SLU 70	12.95	-13538	54.14	12319	22550.71	416.497	Si
SLU 70	14.85	-9946	-1668.07	9050	17350.95	10.402	Si
SLU 36	12.95	-11377	327.77	10352	19489.55	59.462	Si
SLU 36	14.85	-8885	-1501.59	8085	15706.66	10.46	Si
SLU 27	12.95	-11513	32.17	10476	19688.13	612.06	Si
SLU 27	14.85	-8888	-1510.13	8088	15711.61	10.404	Si
SLU 6	12.95	-10928	-136.65	9943	18827.56	137.777	Si
SLU 6	14.85	-8216	-1392.32	7476	14643.44	10.517	Si
SLU 69	12.95	-13533	40.4	12314	22543.76	557.962	Si
SLU 69	14.85	-9944	-1664.54	9048	17347.34	10.422	Si

Verifica a pressoflessione nel piano secondo D.M. 17-01-18 NTC §7.8.2.2.1 in combinazioni sismiche, γM = 2

Comb.	Quota	N	M	σ0	Mu	c.s.	Verifica
SLV 10	12.95	-5402	3261.37	4915	10174.61	3.12	Si
SLV 10	14.85	-4354	-2361.32	3961	8266.95	3.501	Si
SLV 1	12.95	-7755	-5865.87	7056	14339.42	2.445	Si
SLV 1	14.85	-4446	2111.92	4045	8435.57	3.994	Si
SLV 13	12.95	-6171	7140.9	5615	11554.47	1.618	Si

Comb.	Quota	N	M	σ0	Mu	c.s.	Verifica
SLV 13	14.85	-4437	-3935.79	4037	8419.38	2.139	Si
SLV 14	12.95	-6171	7140.9	5615	11554.47	1.618	Si
SLV 14	14.85	-4437	-3935.79	4037	8419.38	2.139	Si
SLV 9	12.95	-5402	3261.37	4915	10174.61	3.12	Si
SLV 9	14.85	-4354	-2361.32	3961	8266.95	3.501	Si
SLV 3	12.95	-8889	-6442.59	8088	16289.9	2.528	Si
SLV 3	14.85	-4519	2576.69	4112	8570.91	3.326	Si
SLV 4	12.95	-8889	-6442.59	8088	16289.9	2.528	Si
SLV 4	14.85	-4519	2576.69	4112	8570.91	3.326	Si
SLV 15	12.95	-7306	6564.19	6648	13557.46	2.065	Si
SLV 15	14.85	-4511	-3471.02	4104	8554.73	2.465	Si
SLV 16	12.95	-7306	6564.19	6648	13557.46	2.065	Si
SLV 16	14.85	-4511	-3471.02	4104	8554.73	2.465	Si
SLV 2	12.95	-7755	-5865.87	7056	14339.42	2.445	Si
SLV 2	14.85	-4446	2111.92	4045	8435.57	3.994	Si

Verifica a taglio nel piano secondo D.M. 17-01-18 (N.T.C.) §7.8.2.2.2 con rottura per scorrimento in combinazioni non sismiche, γM = 3

Comb.	Quota	N	V par	M	σ0	σN	l'	fvd	Vt scorr.	Vt fess.diag.	Vt,lim	c.s.	Verifica
SLU 36	12.95	-11377	830	327.77		10352	3.925	6936	7622			9.19	Si
SLU 36	14.85	-8885	830	-1501.59		8085	3.925	6634	7290			8.79	Si
SLU 74	12.95	-11885	841	476.88		10814	3.925	6997	7690			9.14	Si
SLU 74	14.85	-8256	841	-1373.48		7512	3.925	6557	7206			8.56	Si
SLU 75	12.95	-11890	851	490.62		10819	3.925	6998	7691			9.04	Si
SLU 75	14.85	-8258	851	-1377.01		7514	3.925	6557	7207			8.47	Si
SLU 77	12.95	-13392	890	322.26		12186	3.925	7180	7891			8.86	Si
SLU 77	14.85	-9938	890	-1652.48		9043	3.925	6761	7431			8.35	Si
SLU 84	12.95	-11320	839	659.23		10300	3.925	6929	7615			9.08	Si
SLU 84	14.85	-7693	839	-1186.84		7000	3.925	6489	7131			8.5	Si
SLU 78	12.95	-13397	900	336		12190	3.925	7181	7892			8.77	Si
SLU 78	14.85	-9941	900	-1656		9045	3.925	6762	7431			8.26	Si
SLU 81	12.95	-9807	781	800.1		8924	3.925	6745	7413			9.5	Si
SLU 81	14.85	-6008	781	-904.32		5467	3.925	6284	6907			8.85	Si
SLU 83	12.95	-11315	829	645.49		10295	3.925	6928	7614			9.18	Si
SLU 83	14.85	-7690	830	-1183.31		6998	3.925	6489	7131			8.6	Si
SLU 82	12.95	-9812	790	813.84		8928	3.925	6746	7414			9.39	Si
SLU 82	14.85	-6010	790	-907.84		5469	3.925	6285	6907			8.74	Si
SLU 80	12.95	-12888	832	383.82		11727	3.925	7119	7824			9.4	Si
SLU 80	14.85	-9378	833	-1471		8533	3.925	6693	7356			8.84	Si

Verifica a taglio nel piano secondo D.M. 17-01-18 (N.T.C.) §7.8.2.2.2 con rottura per scorrimento in combinazioni sismiche, γM = 2

Comb.	Quota	N	V par	M	σ0	σN	l'	fvd	Vt scorr.	Vt fess.diag.	Vt,lim	c.s.	Verifica
SLV 11	12.95	-9183	2933	1338.98		8356	3.925	10005	10995			3.75	Si
SLV 11	14.85	-4600	1595	-812.09		4186	3.925	9170	10078			6.32	Si
SLV 12	12.95	-9183	2933	1338.98		8356	3.925	10005	10995			3.75	Si
SLV 12	14.85	-4600	1595	-812.09		4186	3.925	9170	10078			6.32	Si
SLV 1	12.95	-7755	-5843	-5865.87		7654	3.6182	9864	9993			1.71	Si
SLV 1	14.85	-4446	-3174	2111.92		4045	3.925	9142	10047			3.17	Si
SLV 2	12.95	-7755	-5843	-5865.87		7654	3.6182	9864	9993			1.71	Si
SLV 2	14.85	-4446	-3174	2111.92		4045	3.925	9142	10047			3.17	Si
SLV 3	12.95	-8889	-5464	-6442.59		8550	3.7132	10043	10442			1.91	Si
SLV 3	14.85	-4519	-3149	2576.69		4112	3.925	9156	10062			3.2	Si
SLV 13	12.95	-6171	6395	7140.9		9122	2.4161	10158	6872			1.07	Si
SLV 13	14.85	-4437	4080	-3935.79		4911	3.2262	9316	8415			2.06	Si
SLV 15	12.95	-7306	6774	6564.19		8174	3.192	9968	8909			1.32	Si
SLV 15	14.85	-4511	4104	-3471.02		4501	3.5789	9234	9253			2.25	Si
SLV 4	12.95	-8889	-5464	-6442.59		8550	3.7132	10043	10442			1.91	Si
SLV 4	14.85	-4519	-3149	2576.69		4112	3.925	9156	10062			3.2	Si
SLV 16	12.95	-7306	6774	6564.19		8174	3.192	9968	8909			1.32	Si
SLV 16	14.85	-4511	4104	-3471.02		4501	3.5789	9234	9253			2.25	Si
SLV 14	12.95	-6171	6395	7140.9		9122	2.4161	10158	6872			1.07	Si
SLV 14	14.85	-4437	4080	-3935.79		4911	3.2262	9316	8415			2.06	Si

Verifica a pressoflessione fuori piano D.M. 17-01-18 (N.T.C.)

quota 13.6 Wa 0.05 denominatore 8 γM = 2

Comb.	fd	Sa	σ0	N	M	Mc	Coeff.s.	Verifica
SLV 9	143750	0.53	4652	-5112	427.79	688.49	1.61	Si
SLV 10	143750	0.53	4652	-5112	427.79	688.49	1.61	Si
SLV 6	143750	0.53	4906	-5391	427.79	724.49	1.69	Si
SLV 5	143750	0.53	4906	-5391	427.79	724.49	1.69	Si
SLV 13	143750	0.53	5065	-5566	427.79	746.98	1.75	Si
SLV 14	143750	0.53	5065	-5566	427.79	746.98	1.75	Si
SLV 15	143750	0.53	5673	-6234	427.79	832.28	1.95	Si
SLV 16	143750	0.53	5673	-6234	427.79	832.28	1.95	Si
SLV 1	143750	0.53	5911	-6496	427.79	865.47	2.02	Si
SLV 2	143750	0.53	5911	-6496	427.79	865.47	2.02	Si

Verifica dei meccanismi locali di collasso con analisi cinematica lineare

forza di aggancio al piano = 0 quota mezzeria = 13.6 Wa = 0.05 Ta = 0.0573

Comb.	N top	N base	V orto	α0	M*	e*	a0*	aLim	Verifica
SLV 3	-3608	-9263	32	0.061	883.3	0.89	0.9996	9.07197	No
SLV 4	-3608	-9263	32	0.061	883.3	0.89	0.9996	9.07197	No
SLV 13	-2802	-7246	-31	0.063	809.7	0.889	1.03699	9.07197	No
SLV 14	-2802	-7246	-31	0.063	809.7	0.889	1.03699	9.07197	No
SLV 8	-3796	-9737	49	0.058	900.7	0.89	0.95048	8.24559	No
SLV 7	-3796	-9737	49	0.058	900.7	0.89	0.95048	8.24559	No
SLV 2	-3299	-8485	6	0.066	854.7	0.889	1.07963	9.07197	No
SLV 1	-3299	-8485	6	0.066	854.7	0.889	1.07963	9.07197	No
SLV 12	-3647	-9365	38	0.06	886.8	0.89	0.98248	8.24559	No
SLV 11	-3647	-9365	38	0.06	886.8	0.89	0.98248	8.24559	No

Tabella dei coefficienti di sicurezza minimi

Stato limite	Coeff.s.	Comb.	Verifica
PF_SLU	10.382	SLU 28	Si
V_SLU	8.26	SLU 78	Si
PF_SLV	1.618	SLV 13	Si
V_SLV	1.075	SLV 13	Si
PFFP_SLV	1.609	SLV 9	Si
R_SLV	0.11	SLV 3	No

Maschio 230

Verifiche condotte secondo D.M. 17-01-18 (N.T.C.)

Dati geometrici

X ini.	Y ini.	X fin.	Y fin.	Quota i.	Quota.s	l	Sp.	h netta	h ini.	h fin.	a	a.s.,sx	a.s.,dx
-11.868	6.64	-7.943	6.64	L6	L7	3.925	0.28	3.1	3.1	3.1			

Caratteristiche del materiale

(Circolare 7 21-01-19 C8.5.I) Muratura in mattoni pieni e malta di calce LC2_Corti

fb	fk	fvk0	fmedio	τ0	fv0	μ	ϕ	fv,lim	E	G	FC
600000			345000	9000	20000	0.58	0.77	32500	320000000	128000000	1.2

Verifica a pressoflessione nel piano secondo D.M. 17-01-18 NTC §7.8.2.2.1 in combinazioni non sismiche, γM = 3

Comb.	Quota	N	M	σ0	Mu	c.s.	Verifica
SLU 3	12.95	-9386	21.63	8541	16488.84	762.42	Si
SLU 3	14.85	-6588	1058.06	5994	11976.89	11.32	Si
SLU 4	12.95	-9391	18.41	8545	16496.3	895.874	Si
SLU 4	14.85	-6591	1059.33	5997	11981.96	11.311	Si
SLU 48	12.95	-12897	170.56	11735	21663.81	127.019	Si
SLU 48	14.85	-9332	1471.45	8491	16405.11	11.149	Si
SLU 27	12.95	-11457	64.33	10425	19606.53	304.771	Si
SLU 27	14.85	-8936	1411.9	8131	15786.36	11.181	Si
SLU 49	12.95	-12902	167.34	11739	21670.52	129.498	Si
SLU 49	14.85	-9335	1472.72	8494	16409.81	11.143	Si
SLU 7	12.95	-10885	186.88	9904	18764.2	100.406	Si
SLU 7	14.85	-8262	1320.29	7518	14717.68	11.147	Si
SLU 70	12.95	-13478	41.58	12264	22468.86	540.403	Si
SLU 70	14.85	-10012	1565.59	9110	17451.39	11.147	Si
SLU 28	12.95	-11462	61.12	10429	19613.54	320.909	Si
SLU 28	14.85	-8939	1413.17	8134	15791.11	11.174	Si
SLU 6	12.95	-10880	190.1	9900	18757.06	98.671	Si
SLU 6	14.85	-8259	1319.03	7515	14712.83	11.154	Si
SLU 69	12.95	-13474	44.79	12260	22462.27	501.487	Si
SLU 69	14.85	-10009	1564.33	9108	17446.77	11.153	Si

Verifica a pressoflessione nel piano secondo D.M. 17-01-18 NTC §7.8.2.2.1 in combinazioni sismiche, γM = 2

Comb.	Quota	N	M	σ0	Mu	c.s.	Verifica
SLV 5	12.95	-5518	-2879.09	5021	10383.63	3.607	Si
SLV 5	14.85	-4295	2142.99	3908	8160.13	3.808	Si
SLV 4	12.95	-7464	-6047.49	6792	13834.27	2.288	Si
SLV 4	14.85	-4595	3389.68	4181	8708.84	2.569	Si
SLV 13	12.95	-7545	5421.55	6866	13975.49	2.578	Si
SLV 13	14.85	-4496	-2127.7	4091	8528.07	4.008	Si
SLV 14	12.95	-7545	5421.55	6866	13975.49	2.578	Si
SLV 14	14.85	-4496	-2127.7	4091	8528.07	4.008	Si
SLV 16	12.95	-8632	5887.1	7855	15851.83	2.693	Si
SLV 16	14.85	-4642	-2504.43	4224	8794.7	3.512	Si
SLV 6	12.95	-5518	-2879.09	5021	10383.63	3.607	Si
SLV 6	14.85	-4295	2142.99	3908	8160.13	3.808	Si
SLV 15	12.95	-8632	5887.1	7855	15851.83	2.693	Si
SLV 15	14.85	-4642	-2504.43	4224	8794.7	3.512	Si
SLV 1	12.95	-6377	-6513.05	5803	11920.82	1.83	Si
SLV 1	14.85	-4449	3766.41	4048	8442	2.241	Si
SLV 2	12.95	-6377	-6513.05	5803	11920.82	1.83	Si
SLV 2	14.85	-4449	3766.41	4048	8442	2.241	Si
SLV 3	12.95	-7464	-6047.49	6792	13834.27	2.288	Si
SLV 3	14.85	-4595	3389.68	4181	8708.84	2.569	Si

Verifica a taglio nel piano secondo D.M. 17-01-18 (N.T.C.) §7.8.2.2.2 con rottura per scorrimento in combinazioni non sismiche, γM = 3

Comb.	Quota	N	V par	M	σ0	σN	l'	fvd	Vt scorr.	Vt fess.diag.	Vt,lim	c.s.	Verifica
SLU 84	12.95	-11265	-693	-529.78		10250	3.925	6922	7608			10.98	Si
SLU 84	14.85	-7780	-692	1072.89		7079	3.925	6499	7143			10.32	Si
SLU 80	12.95	-12822	-684	-259.05		11667	3.925	7111	7815			11.42	Si
SLU 80	14.85	-9450	-684	1348.52		8599	3.925	6702	7366			10.77	Si
SLU 75	12.95	-11838	-711	-365.5		10771	3.925	6992	7684			10.81	Si
SLU 75	14.85	-8344	-710	1270.41		7593	3.925	6568	7218			10.16	Si
SLU 79	12.95	-12817	-682	-255.84		11662	3.925	7111	7814			11.47	Si
SLU 79	14.85	-9447	-681	1347.25		8596	3.925	6702	7365			10.81	Si
SLU 81	12.95	-9766	-659	-695.04		8886	3.925	6740	7408			11.25	Si
SLU 81	14.85	-6106	-658	810.65		5556	3.925	6296	6920			10.51	Si
SLU 82	12.95	-9771	-661	-698.25		8891	3.925	6741	7408			11.2	Si
SLU 82	14.85	-6109	-661	811.92		5559	3.925	6297	6920			10.47	Si
SLU 74	12.95	-11833	-708	-362.28		10767	3.925	6991	7683			10.85	Si
SLU 74	14.85	-8341	-708	1269.14		7590	3.925	6568	7218			10.19	Si
SLU 78	12.95	-13332	-742	-197.03		12131	3.925	7173	7883			10.62	Si
SLU 78	14.85	-10015	-742	1531.38		9113	3.925	6771	7441			10.03	Si
SLU 83	12.95	-11260	-690	-526.57		10246	3.925	6922	7607			11.02	Si

Comb.	Quota	N	V par	M	σ0	σN	l'	fvd	Vt scorr.	Vt fess.diag.	Vt,lim	c.s.	Verifica
SLU 83	14.85	-7777	-690	1071.62		7077	3.925	6499	7143			10.36	Si
SLU 77	12.95	-13327	-740	-193.81		12127	3.925	7172	7882			10.66	Si
SLU 77	14.85	-10012	-739	1530.11		9111	3.925	6770	7441			10.06	Si

Verifica a taglio nel piano secondo D.M. 17-01-18 (N.T.C.) §7.8.2.2.2 con rottura per scorrimento in combinazioni sismiche, γM = 2

Comb.	Quota	N	V par	M	σ0	σN	l'	fvd	Vt scorr.	Vt fess.diag.	Vt,lim	c.s.	Verifica
SLV 2	12.95	-6377	-6112	-6513.05		8066	2.8236	9947	7864			1.29	Si
SLV 2	14.85	-4449	-3591	3766.41		4746	3.3478	9283	8701			2.42	Si
SLV 14	12.95	-7545	5570	5421.55		7221	3.7319	9777	10217			1.83	Si
SLV 14	14.85	-4496	2840	-2127.7		4091	3.925	9152	10058			3.54	Si
SLV 16	12.95	-8632	5294	5887.1		8025	3.8415	9938	10690			2.02	Si
SLV 16	14.85	-4642	2774	-2504.43		4224	3.925	9178	10087			3.64	Si
SLV 8	12.95	-9141	-2621	-1327.23		8318	3.925	9997	10987			4.19	Si
SLV 8	14.85	-4781	-1485	887.23		4351	3.925	9203	10115			6.81	Si
SLV 1	12.95	-6377	-6112	-6513.05		8066	2.8236	9947	7864			1.29	Si
SLV 1	14.85	-4449	-3591	3766.41		4746	3.3478	9283	8701			2.42	Si
SLV 3	12.95	-7464	-6388	-6047.49		7711	3.4569	9876	9559			1.5	Si
SLV 3	14.85	-4595	-3658	3389.68		4466	3.6744	9227	9492			2.59	Si
SLV 13	12.95	-7545	5570	5421.55		7221	3.7319	9777	10217			1.83	Si
SLV 13	14.85	-4496	2840	-2127.7		4091	3.925	9152	10058			3.54	Si
SLV 4	12.95	-7464	-6388	-6047.49		7711	3.4569	9876	9559			1.5	Si
SLV 4	14.85	-4595	-3658	3389.68		4466	3.6744	9227	9492			2.59	Si
SLV 7	12.95	-9141	-2621	-1327.23		8318	3.925	9997	10987			4.19	Si
SLV 7	14.85	-4781	-1485	887.23		4351	3.925	9203	10115			6.81	Si
SLV 15	12.95	-8632	5294	5887.1		8025	3.8415	9938	10690			2.02	Si
SLV 15	14.85	-4642	2774	-2504.43		4224	3.925	9178	10087			3.64	Si

Verifica a pressoflessione fuori piano D.M. 17-01-18 (N.T.C.)

quota 13.6 Wa 0.05 denominatore 8 γM = 2

Comb.	fd	Sa	σ0	N	M	Mc	Coeff.s.	Verifica
SLV 5	143750	0.53	4453	-4893	427.79	660.11	1.54	Si
SLV 6	143750	0.53	4453	-4893	427.79	660.11	1.54	Si
SLV 10	143750	0.53	4639	-5098	427.79	686.65	1.61	Si
SLV 9	143750	0.53	4639	-5098	427.79	686.65	1.61	Si
SLV 2	143750	0.53	5119	-5626	427.79	754.62	1.76	Si
SLV 1	143750	0.53	5119	-5626	427.79	754.62	1.76	Si
SLV 14	143750	0.53	5740	-6308	427.79	841.69	1.97	Si
SLV 13	143750	0.53	5740	-6308	427.79	841.69	1.97	Si
SLV 3	143750	0.53	5877	-6458	427.79	860.69	2.01	Si
SLV 4	143750	0.53	5877	-6458	427.79	860.69	2.01	Si

Verifica dei meccanismi locali di collasso con analisi cinematica lineare

forza di aggancio al piano = 0 quota mezzeria = 13.6 Wa = 0.05 Ta = 0.0573

Comb.	N top	N base	V orto	α0	M*	e*	a0*	aLim	Verifica
SLV 15	-3566	-9740	35	0.061	879.3	0.889	0.99401	9.07197	No
SLV 16	-3566	-9740	35	0.061	879.3	0.889	0.99401	9.07197	No
SLV 1	-2849	-7176	-35	0.063	813.9	0.889	1.02513	9.07197	No
SLV 2	-2849	-7176	-35	0.063	813.9	0.889	1.02513	9.07197	No
SLV 12	-3778	-10222	52	0.058	899.1	0.89	0.94372	8.24559	No
SLV 11	-3778	-10222	52	0.058	899.1	0.89	0.94372	8.24559	No
SLV 7	-3655	-9726	40	0.06	887.6	0.89	0.97824	8.24559	No
SLV 8	-3655	-9726	40	0.06	887.6	0.89	0.97824	8.24559	No
SLV 14	-3261	-8830	7	0.066	851.2	0.889	1.07801	9.07197	No
SLV 13	-3261	-8830	7	0.066	851.2	0.889	1.07801	9.07197	No

Tabella dei coefficienti di sicurezza minimi

Stato limite	Coeff.s.	Comb.	Verifica
PF_SLU	11.143	SLU 49	Si
V_SLU	10.03	SLU 78	Si
PF_SLV	1.83	SLV 1	Si
V_SLV	1.287	SLV 1	Si
PFFP_SLV	1.543	SLV 5	Si
R_SLV	0.11	SLV 15	No

Maschio 231

Verifiche condotte secondo D.M. 17-01-18 (N.T.C.)

Dati geometrici

X ini.	Y ini.	X fin.	Y fin.	Quota i.	Quota.s	l	Sp.	h netta	h ini.	h fin.	a	a.s.,sx	a.s.,dx
-6.943	6.64	-5.088	6.64	L6	L7	1.855	0.28	3.1	3.1	3.1			

Caratteristiche del materiale

(Circolare 7 21-01-19 C8.5.I) Muratura in mattoni pieni e malta di calce LC2_Corti

fb	fk	fvk0	fmedio	τ0	fv0	μ	ϕ	fv,lim	E	G	FC
600000			345000	9000	20000	0.58	0.77	32500	320000000	128000000	1.2

Verifica a pressoflessione nel piano secondo D.M. 17-01-18 NTC §7.8.2.2.1 in combinazioni non sismiche, γM = 3

Comb.	Quota	N	M	σ0	Mu	c.s.	Verifica
SLU 17	12.95	-3212	-228.07	6182	2753.41	12.072	Si
SLU 17	14.85	-1787	-1474.84	3440	1588.04	1.077	Si
SLU 80	12.95	-4109	-263.29	7910	3441.92	13.073	Si
SLU 80	14.85	-2257	-1785.73	4345	1982.45	1.11	Si
SLU 79	12.95	-4112	-257.84	7915	3443.79	13.357	Si
SLU 79	14.85	-2261	-1784.35	4351	1985.05	1.112	Si

Comb.	Quota	N	M	σ0	Mu	c.s.	Verifica
SLU 8	12.95	-3371	-323.18	6489	2878.21	8.906	Si
SLU 8	14.85	-1820	-1475.21	3504	1616.1	1.096	Si
SLU 30	12.95	-3448	-277.9	6636	2937.81	10.572	Si
SLU 30	14.85	-1975	-1603.45	3801	1746.62	1.089	Si
SLU 16	12.95	-3214	-222.62	6187	2755.38	12.377	Si
SLU 16	14.85	-1790	-1473.46	3446	1590.71	1.08	Si
SLU 29	12.95	-3450	-272.44	6641	2939.76	10.791	Si
SLU 29	14.85	-1978	-1602.06	3808	1749.26	1.092	Si
SLU 37	12.95	-3293	-171.87	6339	2817.47	16.393	Si
SLU 37	14.85	-1948	-1600.31	3750	1724.08	1.077	Si
SLU 9	12.95	-3369	-328.64	6484	2876.26	8.752	Si
SLU 9	14.85	-1817	-1476.6	3498	1613.44	1.093	Si
SLU 38	12.95	-3291	-177.33	6335	2815.51	15.877	Si
SLU 38	14.85	-1945	-1601.69	3744	1721.43	1.075	Si

Verifica a pressoflessione nel piano secondo D.M. 17-01-18 NTC §7.8.2.2.1 in combinazioni sismiche, γM = 2

Comb.	Quota	N	M	σ0	Mu	c.s.	Verifica
SLV 4	12.95	-3552	-2146.36	6837	3110.62	1.449	Si
SLV 4	14.85	-878	250.64	1690	803.19	3.205	Si
SLV 12	12.95	-791	922.57	0	0	0	No, e>l/2
SLV 12	14.85	-1721	-1107.17	3313	1553.35	1.403	Si
SLV 9	12.95	-4054	-30.78	7803	3520.54	114.387	Si
SLV 9	14.85	-1081	-1107.98	0	0	0	No, e>l/2
SLV 10	12.95	-4054	-30.78	7803	3520.54	114.387	Si
SLV 10	14.85	-1081	-1107.98	0	0	0	No, e>l/2
SLV 15	12.95	-1061	2061.73	0	0	0	No, e>l/2
SLV 15	14.85	-1830	-1838.73	0	0	0	No, e>l/2
SLV 14	12.95	-2040	1775.73	3927	1831.77	1.032	Si
SLV 14	14.85	-1638	-1838.98	0	0	0	No, e>l/2
SLV 3	12.95	-3552	-2146.36	6837	3110.62	1.449	Si
SLV 3	14.85	-878	250.64	1690	803.19	3.205	Si
SLV 13	12.95	-2040	1775.73	3927	1831.77	1.032	Si
SLV 13	14.85	-1638	-1838.98	0	0	0	No, e>l/2
SLV 16	12.95	-1061	2061.73	0	0	0	No, e>l/2
SLV 16	14.85	-1830	-1838.73	0	0	0	No, e>l/2
SLV 11	12.95	-791	922.57	0	0	0	No, e>l/2
SLV 11	14.85	-1721	-1107.17	3313	1553.35	1.403	Si

Verifica a taglio nel piano secondo D.M. 17-01-18 (N.T.C.) §7.8.2.2.2 con rottura per scorrimento in combinazioni non sismiche, γM = 3

Comb.	Quota	N	V par	M	σ0	σN	I'	fvd	Vt scorr.	Vt fess.diag.	Vt,lim	c.s.	Verifica
SLU 30	12.95	-3448	875	-277.9		6636	1.8554	6440	3346			3.82	Si
SLU 30	14.85	-1975	889	-1603.45		20305	0.3474	8263	804			0.9	No, Vu<V
SLU 17	12.95	-3212	843	-228.07		6182	1.8554	6380	3314			3.93	Si
SLU 17	14.85	-1787	858	-1474.84		20755	0.3075	8323	717			0.84	No, Vu<V
SLU 37	12.95	-3293	988	-171.87		6339	1.8554	6401	3325			3.36	Si
SLU 37	14.85	-1948	1007	-1600.31		21830	0.3187	8466	756			0.75	No, Vu<V
SLU 79	12.95	-4112	1055	-257.84		7915	1.8554	6611	3434			3.26	Si
SLU 79	14.85	-2261	1075	-1784.35		19452	0.415	8149	947			0.88	No, Vu<V
SLU 38	12.95	-3291	986	-177.33		6335	1.8554	6400	3325			3.37	Si
SLU 38	14.85	-1945	1005	-1601.69		22221	0.3126	8518	746			0.74	No, Vu<V
SLU 59	12.95	-4030	909	-314.04		7757	1.8554	6590	3424			3.77	Si
SLU 59	14.85	-2100	926	-1658.88		18162	0.4129	7977	922			1	No, Vu<V
SLU 16	12.95	-3214	845	-222.62		6187	1.8554	6381	3315			3.92	Si
SLU 16	14.85	-1790	860	-1473.46		20351	0.3142	8269	727			0.85	No, Vu<V
SLU 80	12.95	-4109	1052	-263.29		7910	1.8554	6610	3434			3.26	Si
SLU 80	14.85	-2257	1073	-1785.73		19669	0.4099	8178	939			0.87	No, Vu<V
SLU 58	12.95	-4033	911	-308.58		7762	1.8554	6591	3424			3.76	Si
SLU 58	14.85	-2103	928	-1657.5		17949	0.4184	7949	931			1	Si
SLU 29	12.95	-3450	877	-272.44		6641	1.8554	6441	3346			3.82	Si
SLU 29	14.85	-1978	892	-1602.06		19994	0.3533	8221	813			0.91	No, Vu<V

Verifica a taglio nel piano secondo D.M. 17-01-18 (N.T.C.) §7.8.2.2.2 con rottura per scorrimento in combinazioni sismiche, γM = 2

Comb.	Quota	N	V par	M	σ0	σN	I'	fvd	Vt scorr.	Vt fess.diag.	Vt,lim	c.s.	Verifica
SLV 1	12.95	-4531	-2857	-2432.37		13801	1.1725	11093	3642			1.27	Si
SLV 1	14.85	-686	-2151	250.4		1451	1.6877	8624	4075			1.89	Si
SLV 14	12.95	-2040	3208	1775.73		42397	0.1719	16250	782			0.24	No, Vu<V
SLV 14	14.85	-1638	2202	-1838.98		0	0	8333	0			0	No, Vu<V
SLV 12	12.95	-791	2305	922.57		0	0	8333	0			0	No, Vu<V
SLV 12	14.85	-1721	2605	-1107.17		7204	0.8532	9774	2335			0.9	No, Vu<V
SLV 11	12.95	-791	2305	922.57		0	0	8333	0			0	No, Vu<V
SLV 11	14.85	-1721	2605	-1107.17		7204	0.8532	9774	2335			0.9	No, Vu<V
SLV 2	12.95	-4531	-2857	-2432.37		13801	1.1725	11093	3642			1.27	Si
SLV 2	14.85	-686	-2151	250.4		1451	1.6877	8624	4075			1.89	Si
SLV 10	12.95	-4054	429	-30.78		7803	1.8554	9894	5140			11.99	Si
SLV 10	14.85	-1081	-360	-1107.98		0	0	8333	0			0	No, Vu<V
SLV 13	12.95	-2040	3208	1775.73		42397	0.1719	16250	782			0.24	No, Vu<V
SLV 13	14.85	-1638	2202	-1838.98		0	0	8333	0			0	No, Vu<V
SLV 16	12.95	-1061	3771	2061.73		0	0	8333	0			0	No, Vu<V
SLV 16	14.85	-1830	3091	-1838.73		0	0	8333	0			0	No, Vu<V
SLV 15	12.95	-1061	3771	2061.73		0	0	8333	0			0	No, Vu<V
SLV 15	14.85	-1830	3091	-1838.73		0	0	8333	0			0	No, Vu<V
SLV 9	12.95	-4054	429	-30.78		7803	1.8554	9894	5140			11.99	Si
SLV 9	14.85	-1081	-360	-1107.98		0	0	8333	0			0	No, Vu<V

Verifica a pressoflessione fuori piano D.M. 17-01-18 (N.T.C.)

quota 13.6 Wa 0.05 denominatore 8 γM = 2

Comb.	fd	Sa	σ0	N	M	Mc	Coeff.s.	Verifica
SLV 8	143750	0.53	0	-1291	202.22	0	0	No, e>t/2
SLV 12	143750	0.53	0	-947	202.22	0	0	No, e>t/2

Comb.	fd	Sa	σ0	N	M	Mc	Coeff.s.	Verifica
SLV 7	143750	0.53	0	-1291	202.22	0	0	No, e>t/2
SLV 15	143750	0.53	0	-1275	202.22	0	0	No, e>t/2
SLV 11	143750	0.53	0	-947	202.22	0	0	No, e>t/2
SLV 16	143750	0.53	0	-1275	202.22	0	0	No, e>t/2
SLV 13	143750	0.53	3657	-1900	202.22	258.05	1.28	Si
SLV 14	143750	0.53	3657	-1900	202.22	258.05	1.28	Si
SLV 3	143750	0.53	4660	-2421	202.22	326.03	1.61	Si
SLV 4	143750	0.53	4660	-2421	202.22	326.03	1.61	Si

Verifica dei meccanismi locali di collasso con analisi cinematica lineare

forza di aggancio al piano = 0 quota mezzeria = 13.6 Wa = 0.05 Ta = 0.0573

Comb.	N top	N base	V orto	α0	M*	e*	a0*	aLim	Verifica
SLV 3	-953	-3443	-30	0.06	350.7	0.893	0.97655	9.07197	No
SLV 4	-953	-3443	-30	0.06	350.7	0.893	0.97655	9.07197	No
SLV 8	-1143	-1005	-30	0.059	366.8	0.89	0.96194	8.24559	No
SLV 7	-1143	-1005	-30	0.059	366.8	0.89	0.96194	8.24559	No
SLV 1	-748	-4947	-20	0.066	334.2	0.899	1.06285	9.07197	No
SLV 2	-748	-4947	-20	0.066	334.2	0.899	1.06285	9.07197	No
SLV 11	-1101	-419	-20	0.063	363.2	0.891	1.02636	8.24559	No
SLV 12	-1101	-419	-20	0.063	363.2	0.891	1.02636	8.24559	No
SLV 14	-607	-2993	12	0.071	323.7	0.906	1.14426	9.07197	No
SLV 13	-607	-2993	12	0.071	323.7	0.906	1.14426	9.07197	No

Tabella dei coefficienti di sicurezza minimi

Stato limite	Coeff.s.	Comb.	Verifica
PF_SLU	1.075	SLU 38	Si
V_SLU	0.742	SLU 38	No
PF_SLV	0	SLV 9	No
V_SLV	0	SLV 9	No
PFFP_SLV	0	SLV 7	No
R_SLV	0.108	SLV 3	No

Maschio 232

Verifiche condotte secondo D.M. 17-01-18 (N.T.C.)

Dati geometrici

X ini.	Y ini.	X fin.	Y fin.	Quota i.	Quota.s	l	Sp.	h netta	h ini.	h fin.	a	a.s.,sx	a.s.,dx
-20.6	1.141	-24.613	1.141	L6	L7	4.013	0.28	3.1	3.1	3.1			

Caratteristiche del materiale

(Circolare 7 21-01-19 C8.5.I) Muratura in mattoni pieni e malta di calce LC2_Corti

fb	fk	fvk0	fmedio	τ0	fv0	μ	ϕ	fv,lim	E	G	FC
600000			345000	9000	20000	0.58	0.77	32500	320000000	128000000	1.2

Verifica a pressoflessione nel piano secondo D.M. 17-01-18 NTC §7.8.2.2.1 in combinazioni non sismiche, γM = 3

Comb.	Quota	N	M	σ0	Mu	c.s.	Verifica
SLU 83	12.05	-16464	5146.82	14653	27090.37	5.264	Si
SLU 83	14.15	-19366	-4142.32	17236	30634.18	7.395	Si
SLU 42	12.05	-12619	4728.38	11231	21828.01	4.616	Si
SLU 42	14.15	-15913	-3440.4	14163	26376.72	7.667	Si
SLU 31	12.05	-11426	4375.25	10169	20062.65	4.585	Si
SLU 31	14.15	-13684	-2825.11	12179	23350.11	8.265	Si
SLU 39	12.05	-10890	5054.47	9692	19249.2	3.808	Si
SLU 39	14.15	-13731	-2879.17	12221	23416.56	8.133	Si
SLU 19	12.05	-10941	3992.78	9737	19327.15	4.841	Si
SLU 19	14.15	-12593	-2537.01	11208	21790.41	8.589	Si
SLU 82	12.05	-14729	5313.47	13109	24796.04	4.667	Si
SLU 82	14.15	-17116	-3513.29	15234	27919.23	7.947	Si
SLU 18	12.05	-10943	4072.5	9740	19331.11	4.747	Si
SLU 18	14.15	-12627	-2570.91	11239	21839.74	8.495	Si
SLU 40	12.05	-10887	4974.75	9690	19245.24	3.869	Si
SLU 40	14.15	-13697	-2845.27	12191	23368.87	8.213	Si
SLU 81	12.05	-14732	5393.19	13111	24799.57	4.598	Si
SLU 81	14.15	-17150	-3547.19	15264	27961.83	7.883	Si
SLU 41	12.05	-12622	4808.1	11234	21831.77	4.541	Si
SLU 41	14.15	-15947	-3474.3	14193	26421.11	7.605	Si

Verifica a pressoflessione nel piano secondo D.M. 17-01-18 NTC §7.8.2.2.1 in combinazioni sismiche, γM = 2

Comb.	Quota	N	M	σ0	Mu	c.s.	Verifica
SLV 16	12.05	-8794	1710.81	7827	16513.4	9.652	Si
SLV 16	14.15	-7589	4093.24	6754	14384.64	3.514	Si
SLV 4	12.05	-15099	3521.61	13439	26963.14	7.656	Si
SLV 4	14.15	-16547	-7895.1	14728	29198.6	3.698	Si
SLV 15	12.05	-8794	1710.81	7827	16513.4	9.652	Si
SLV 15	14.15	-7589	4093.24	6754	14384.64	3.514	Si
SLV 3	12.05	-15099	3521.61	13439	26963.14	7.656	Si
SLV 3	14.15	-16547	-7895.1	14728	29198.6	3.698	Si
SLV 9	12.05	-12832	3557.55	11421	23339.85	6.561	Si
SLV 9	14.15	-14621	-3415.72	13013	26211.24	7.674	Si
SLV 10	12.05	-12832	3557.55	11421	23339.85	6.561	Si
SLV 10	14.15	-14621	-3415.72	13013	26211.24	7.674	Si
SLV 1	12.05	-15945	4081.44	14191	28275.68	6.928	Si
SLV 1	14.15	-18346	-9424.2	16328	31889.9	3.384	Si
SLV 6	12.05	-14724	4100.79	13105	26373.51	6.431	Si
SLV 6	14.15	-17309	-7012.22	15405	30349.32	4.328	Si

Comb.	Quota	N	M	σ0	Mu	c.s.	Verifica
SLV 5	12.05	-14724	4100.79	13105	26373.51	6.431	Si
SLV 5	14.15	-17309	-7012.22	15405	30349.32	4.328	Si
SLV 2	12.05	-15945	4081.44	14191	28275.68	6.928	Si
SLV 2	14.15	-18346	-9424.2	16328	31889.9	3.384	Si

Verifica a taglio nel piano secondo D.M. 17-01-18 (N.T.C.) §7.8.2.2.2 con rottura per scorrimento in combinazioni non sismiche, γM = 3

Comb.	Quota	N	V par	M	σ0	σN	l'	fvd	Vt scorr.	Vt fess.diag.	Vt,lim	c.s.	Verifica
SLU 83	12.05	-16464	12486	5146.82		14653	4.0128	7509	8437			0.68	No, Vu<V
SLU 83	14.15	-19366	12486	-4142.32		17236	4.0128	7854	8824			0.71	No, Vu<V
SLU 42	12.05	-12619	11155	4728.38		11231	4.0128	7053	7925			0.71	No, Vu<V
SLU 42	14.15	-15913	11177	-3440.4		14163	4.0128	7444	8364			0.75	No, Vu<V
SLU 77	12.05	-19388	12530	4208.95		17255	4.0128	7856	8827			0.7	No, Vu<V
SLU 77	14.15	-22385	12530	-4982.64		19923	4.0128	8212	9227			0.74	No, Vu<V
SLU 78	12.05	-19385	12434	4129.23		17253	4.0128	7856	8827			0.71	No, Vu<V
SLU 78	14.15	-22351	12456	-4948.74		19893	4.0128	8208	9222			0.74	No, Vu<V
SLU 80	12.05	-18734	12252	4274.37		16673	4.0128	7779	8740			0.71	No, Vu<V
SLU 80	14.15	-21558	12274	-4705.99		19187	4.0128	8114	9116			0.74	No, Vu<V
SLU 82	12.05	-14729	11762	5313.47		13109	4.0128	7303	8206			0.7	No, Vu<V
SLU 82	14.15	-17116	11784	-3513.29		15234	4.0128	7587	8524			0.72	No, Vu<V
SLU 84	12.05	-16461	12390	5067.1		14651	4.0128	7509	8437			0.68	No, Vu<V
SLU 84	14.15	-19332	12412	-4108.42		17206	4.0128	7850	8820			0.71	No, Vu<V
SLU 41	12.05	-12622	11251	4808.1		11234	4.0128	7053	7925			0.7	No, Vu<V
SLU 41	14.15	-15947	11251	-3474.3		14193	4.0128	7448	8368			0.74	No, Vu<V
SLU 81	12.05	-14732	11858	5393.19		13111	4.0128	7304	8206			0.69	No, Vu<V
SLU 81	14.15	-17150	11858	-3547.19		15264	4.0128	7591	8529			0.72	No, Vu<V
SLU 79	12.05	-18736	12348	4354.09		16676	4.0128	7779	8740			0.71	No, Vu<V
SLU 79	14.15	-21592	12348	-4739.89		19217	4.0128	8118	9121			0.74	No, Vu<V

Verifica a taglio nel piano secondo D.M. 17-01-18 (N.T.C.) §7.8.2.2.2 con rottura per scorrimento in combinazioni sismiche, γM = 2

Comb.	Quota	N	V par	M	σ0	σN	l'	fvd	Vt scorr.	Vt fess.diag.	Vt,lim	c.s.	Verifica
SLV 5	12.05	-14724	12170	4100.79		13105	4.0128	10954	12308			1.01	Si
SLV 5	14.15	-17309	11213	-7012.22		15405	4.0128	11414	12825			1.14	Si
SLV 1	12.05	-15945	13708	4081.44		14191	4.0128	11172	12552			0.92	No, Vu<V
SLV 1	14.15	-18346	11513	-9424.2		16328	4.0128	11599	13032			1.13	Si
SLV 7	12.05	-11906	5633	2234.69		10597	4.0128	10453	11744			2.08	Si
SLV 7	14.15	-11314	5333	-1915.24		10069	4.0128	10347	11626			2.18	Si
SLV 6	12.05	-14724	12170	4100.79		13105	4.0128	10954	12308			1.01	Si
SLV 6	14.15	-17309	11213	-7012.22		15405	4.0128	11414	12825			1.14	Si
SLV 8	12.05	-11906	5633	2234.69		10597	4.0128	10453	11744			2.08	Si
SLV 8	14.15	-11314	5333	-1915.24		10069	4.0128	10347	11626			2.18	Si
SLV 2	12.05	-15945	13708	4081.44		14191	4.0128	11172	12552			0.92	No, Vu<V
SLV 2	14.15	-18346	11513	-9424.2		16328	4.0128	11599	13032			1.13	Si
SLV 10	12.05	-12832	8890	3557.55		11421	4.0128	10618	11930			1.34	Si
SLV 10	14.15	-14621	9191	-3415.72		13013	4.0128	10936	12287			1.34	Si
SLV 9	12.05	-12832	8890	3557.55		11421	4.0128	10618	11930			1.34	Si
SLV 9	14.15	-14621	9191	-3415.72		13013	4.0128	10936	12287			1.34	Si
SLV 3	12.05	-15099	11747	3521.61		13439	4.0128	11021	12383			1.05	Si
SLV 3	14.15	-16547	9749	-7895.1		14728	4.0128	11279	12673			1.3	Si
SLV 4	12.05	-15099	11747	3521.61		13439	4.0128	11021	12383			1.05	Si
SLV 4	14.15	-16547	9749	-7895.1		14728	4.0128	11279	12673			1.3	Si

Verifica a pressoflessione fuori piano D.M. 17-01-18 (N.T.C.)

quota 13.6 Wa 0.05 denominatore 8 γM = 2

Comb.	fd	Sa	σ0	N	M	Mc	Coeff.s.	Verifica
SLV 16	143750	0.53	6994	-7858	447.53	1037.14	2.32	Si
SLV 15	143750	0.53	6994	-7858	447.53	1037.14	2.32	Si
SLV 11	143750	0.53	7872	-8845	447.53	1158.49	2.59	Si
SLV 12	143750	0.53	7872	-8845	447.53	1158.49	2.59	Si
SLV 14	143750	0.53	8494	-9544	447.53	1243.28	2.78	Si
SLV 13	143750	0.53	8494	-9544	447.53	1243.28	2.78	Si
SLV 7	143750	0.53	10126	-11377	447.53	1460.76	3.26	Si
SLV 8	143750	0.53	10126	-11377	447.53	1460.76	3.26	Si
SLV 10	143750	0.53	12874	-14465	447.53	1811.77	4.05	Si
SLV 9	143750	0.53	12874	-14465	447.53	1811.77	4.05	Si

Verifica dei meccanismi locali di collasso con analisi cinematica lineare

forza di aggancio al piano = 0 quota mezzeria = 13.6 Wa = 0.05 Ta = 0.0573

Comb.	N top	N base	V orto	α0	M*	e*	a0*	aLim	Verifica
SLV 11	-7505	-10015	-264	0.034	1271.9	0.906	0.53962	8.24559	No
SLV 12	-7505	-10015	-264	0.034	1271.9	0.906	0.53962	8.24559	No
SLV 8	-9384	-11906	-279	0.034	1458.8	0.914	0.54405	8.24559	No
SLV 7	-9384	-11906	-279	0.034	1458.8	0.914	0.54405	8.24559	No
SLV 9	-11401	-12832	273	0.036	1660.8	0.922	0.56925	8.24559	No
SLV 10	-11401	-12832	273	0.036	1660.8	0.922	0.56925	8.24559	No
SLV 6	-13281	-14724	259	0.038	1850	0.928	0.59527	8.24559	No
SLV 5	-13281	-14724	259	0.038	1850	0.928	0.59527	8.24559	No
SLV 4	-12941	-15099	-107	0.047	1815.8	0.927	0.74142	9.07197	No
SLV 3	-12941	-15099	-107	0.047	1815.8	0.927	0.74142	9.07197	No

Tabella dei coefficienti di sicurezza minimi

Stato limite	Coeff.s.	Comb.	Verifica
PF_SLU	3.808	SLU 39	Si
V_SLU	0.676	SLU 83	No
PF_SLV	3.384	SLV 1	Si
V_SLV	0.916	SLV 1	No
PFFP_SLV	2.317	SLV 15	Si
R_SLV	0.065	SLV 11	No

Maschio 233

Verifiche condotte secondo D.M. 17-01-18 (N.T.C.)

Dati geometrici

X ini.	Y ini.	X fin.	Y fin.	Quota i.	Quota.s	l	Sp.	h netta	h ini.	h fin.	a	a.s.,sx	a.s.,dx
-12.865	1.141	-19.8	1.141	L6	L7	6.935	0.28	3.1	3.1	3.1			

Caratteristiche del materiale

(Circolare 7 21-01-19 C8.5.I) Muratura in mattoni pieni e malta di calce LC2_Corti

fb	fk	fvk0	fmedio	τ0	fv0	μ	ϕ	fv,lim	E	G	FC
600000			345000	9000	20000	0.58	0.77	32500	320000000	128000000	1.2

Verifica a pressoflessione nel piano secondo D.M. 17-01-18 NTC §7.8.2.2.1 in combinazioni non sismiche, γM = 3

Comb.	Quota	N	M	σ0	Mu	c.s.	Verifica
SLU 42	12.05	-24201	-8152.68	12463	71076.48	8.718	Si
SLU 42	14.55	-19758	-4995.87	10175	59952.11	12	Si
SLU 41	12.05	-24118	-8945.88	12421	70878.44	7.923	Si
SLU 41	14.55	-19642	-5330.67	10115	59649.94	11.19	Si
SLU 82	12.05	-27443	-8560.16	14133	78648.04	9.188	Si
SLU 82	14.55	-20546	-5298.5	10581	61989.01	11.699	Si
SLU 37	12.05	-28257	-8717.39	14552	80477.12	9.232	Si
SLU 37	14.55	-23889	-5362.13	12303	70324.99	13.115	Si
SLU 39	12.05	-20742	-8556.47	10682	62491.87	7.303	Si
SLU 39	14.55	-15844	-5011.45	8159	49435.26	9.864	Si
SLU 40	12.05	-20824	-7763.28	10724	62702.08	8.077	Si
SLU 40	14.55	-15960	-4676.65	8219	49756.76	10.639	Si
SLU 32	12.05	-26297	-8372.81	13543	76025.65	9.08	Si
SLU 32	14.55	-21660	-4761.26	11155	64821.57	13.614	Si
SLU 83	12.05	-30737	-9742.76	15829	85868.61	8.814	Si
SLU 83	14.55	-24228	-5952.53	12477	71141.88	11.952	Si
SLU 81	12.05	-27360	-9353.35	14090	78461.69	8.389	Si
SLU 81	14.55	-20430	-5633.31	10521	61690.85	10.951	Si
SLU 18	12.05	-20172	-6764.21	10388	61025.03	9.022	Si
SLU 18	14.55	-14884	-4087.73	7665	46755.08	11.438	Si

Verifica a pressoflessione nel piano secondo D.M. 17-01-18 NTC §7.8.2.2.1 in combinazioni sismiche, γM = 2

Comb.	Quota	N	M	σ0	Mu	c.s.	Verifica
SLV 5	12.05	-29519	-10071.92	15202	89622.32	8.898	Si
SLV 5	14.55	-18909	-18409.47	9738	60342.01	3.278	Si
SLV 3	12.05	-26067	354.4	13424	80457.52	227.021	Si
SLV 3	14.55	-23434	-29772.7	12068	73232.72	2.46	Si
SLV 4	12.05	-26067	354.4	13424	80457.52	227.021	Si
SLV 4	14.55	-23434	-29772.7	12068	73232.72	2.46	Si
SLV 6	12.05	-29519	-10071.92	15202	89622.32	8.898	Si
SLV 6	14.55	-18909	-18409.47	9738	60342.01	3.278	Si
SLV 14	12.05	-18668	-11611.54	9614	59638.5	5.136	Si
SLV 14	14.55	-9281	22604.12	4780	30923.4	1.368	Si
SLV 16	12.05	-15343	-8177.64	7901	49760.11	6.085	Si
SLV 16	14.55	-9045	26440.08	4658	30168.77	1.141	Si
SLV 15	12.05	-15343	-8177.64	7901	49760.11	6.085	Si
SLV 15	14.55	-9045	26440.08	4658	30168.77	1.141	Si
SLV 2	12.05	-29393	-3079.49	15137	89293.44	28.996	Si
SLV 2	14.55	-23670	-33608.66	12190	73888.16	2.198	Si
SLV 1	12.05	-29393	-3079.49	15137	89293.44	28.996	Si
SLV 1	14.55	-23670	-33608.66	12190	73888.16	2.198	Si
SLV 13	12.05	-18668	-11611.54	9614	59638.5	5.136	Si
SLV 13	14.55	-9281	22604.12	4780	30923.4	1.368	Si

Verifica a taglio nel piano secondo D.M. 17-01-18 (N.T.C.) §7.8.2.2.2 con rottura per scorrimento in combinazioni non sismiche, γM = 3

Comb.	Quota	N	V par	M	σ0	σN	l'	fvd	Vt scorr.	Vt fess.diag.	Vt,lim	c.s.	Verifica
SLU 84	12.05	-30819	918	-8949.56		15871	6.935	7672	14897			16.23	Si
SLU 84	14.55	-24344	1387	-5617.72		12537	6.935	7227	14034			10.12	Si
SLU 31	12.05	-21642	907	-6616.58		11145	6.935	7042	13673			15.07	Si
SLU 31	14.55	-16487	1282	-4165.68		8491	6.935	6688	12986			10.13	Si
SLU 52	12.05	-27689	942	-5621.21		14260	6.935	7457	14480			15.37	Si
SLU 52	14.55	-20114	1322	-3863.82		10358	6.935	6937	13470			10.19	Si
SLU 82	12.05	-27443	898	-8560.16		14133	6.935	7440	14447			16.08	Si
SLU 82	14.55	-20546	1346	-5298.5		10581	6.935	6966	13527			10.05	Si
SLU 61	12.05	-26872	875	-6767.9		13839	6.935	7401	14371			16.42	Si
SLU 61	14.55	-19587	1270	-4374.78		10087	6.935	6900	13399			10.55	Si
SLU 73	12.05	-28260	965	-7413.46		14553	6.935	7496	14556			15.08	Si
SLU 73	14.55	-21073	1398	-4787.54		10852	6.935	7003	13598			9.73	Si
SLU 76	12.05	-31636	985	-7802.87		16292	6.935	7728	15006			15.24	Si
SLU 76	14.55	-24871	1438	-5106.76		12808	6.935	7263	14104			9.81	Si
SLU 40	12.05	-20824	841	-7763.28		10724	6.935	6985	13564			16.14	Si
SLU 40	14.55	-15960	1230	-4676.65		8219	6.935	6651	12916			10.5	Si
SLU 55	12.05	-31065	962	-6010.61		15998	6.935	7689	14930			15.52	Si
SLU 55	14.55	-23912	1362	-4183.04		12314	6.935	7197	13976			10.26	Si
SLU 34	12.05	-25018	927	-7005.99		12884	6.935	7273	14123			15.24	Si
SLU 34	14.55	-20285	1322	-4484.9		10446	6.935	6948	13492			10.21	Si

Verifica a taglio nel piano secondo D.M. 17-01-18 (N.T.C.) §7.8.2.2.2 con rottura per scorrimento in combinazioni sismiche, γM = 2

Comb.	Quota	N	V par	M	σ0	σN	l'	fvd	Vt scorr.	Vt fess.diag.	Vt,lim	c.s.	Verifica
SLV 7	12.05	-18434	5386	1374.4		9493	6.935	10232	19868			3.69	Si
SLV 7	14.55	-18123	6354	-5622.95		9333	6.935	10200	19806			3.12	Si
SLV 15	12.05	-15343	-18652	-8177.64		7901	6.935	9914	19250			1.03	Si
SLV 15	14.55	-9045	-12302	26440.08		19779	1.6333	12289	5620			0.46	No, Vu<V
SLV 1	12.05	-29393	19240	-3079.49		15137	6.935	11361	22060			1.15	Si

Comb.	Quota	N	V par	M	σ0	σN	l'	fvd	Vt scorr.	Vt fess.diag.	Vt,lim	c.s.	Verifica
SLV 1	14.55	-23670	13459	-33608.66		13762	6.1429	11086	19067			1.42	Si
SLV 8	12.05	-18434	5386	1374.4		9493	6.935	10232	19868			3.69	Si
SLV 8	14.55	-18123	6354	-5622.95		9333	6.935	10200	19806			3.12	Si
SLV 3	12.05	-26067	18915	354.4		13424	6.935	11018	21395			1.13	Si
SLV 3	14.55	-23434	14511	-29772.7		12698	6.5911	10873	20066			1.38	Si
SLV 14	12.05	-18668	-18327	-11611.54		9614	6.935	10256	19915			1.09	Si
SLV 14	14.55	-9281	-13353	22604.12		10706	3.096	10475	9080			0.68	No, Vu<V
SLV 16	12.05	-15343	-18652	-8177.64		7901	6.935	9914	19250			1.03	Si
SLV 16	14.55	-9045	-12302	26440.08		19779	1.6333	12289	5620			0.46	No, Vu<V
SLV 2	12.05	-29393	19240	-3079.49		15137	6.935	11361	22060			1.15	Si
SLV 2	14.55	-23670	13459	-33608.66		13762	6.1429	11086	19067			1.42	Si
SLV 13	12.05	-18668	-18327	-11611.54		9614	6.935	10256	19915			1.09	Si
SLV 13	14.55	-9281	-13353	22604.12		10706	3.096	10475	9080			0.68	No, Vu<V
SLV 4	12.05	-26067	18915	354.4		13424	6.935	11018	21395			1.13	Si
SLV 4	14.55	-23434	14511	-29772.7		12698	6.5911	10873	20066			1.38	Si

Verifica a pressoflessione fuori piano D.M. 17-01-18 (N.T.C.)

quota 13.6 Wa 0.05 denominatore 8 γM = 2

Comb.	fd	Sa	σ0	N	M	Mc	Coeff.s.	Verifica
SLV 15	143750	0.53	6289	-12211	773.44	1621.62	2.1	Si
SLV 16	143750	0.53	6289	-12211	773.44	1621.62	2.1	Si
SLV 14	143750	0.53	6718	-13045	773.44	1725.89	2.23	Si
SLV 13	143750	0.53	6718	-13045	773.44	1725.89	2.23	Si
SLV 11	143750	0.53	7910	-15361	773.44	2011.26	2.6	Si
SLV 12	143750	0.53	7910	-15361	773.44	2011.26	2.6	Si
SLV 9	143750	0.53	9341	-18139	773.44	2345.32	3.03	Si
SLV 10	143750	0.53	9341	-18139	773.44	2345.32	3.03	Si
SLV 8	143750	0.53	9730	-18893	773.44	2434.44	3.15	Si
SLV 7	143750	0.53	9730	-18893	773.44	2434.44	3.15	Si

Verifica dei meccanismi locali di collasso con analisi cinematica lineare

forza di aggancio al piano = 0 quota mezzeria = 13.6 Wa = 0.05 Ta = 0.0573

Comb.	N top	N base	V orto	α0	M*	e*	a0*	aLim	Verifica
SLV 9	-13784	-26302	-806	0.016	2278.9	0.908	0.2553	8.24559	No
SLV 10	-13784	-26302	-806	0.016	2278.9	0.908	0.2553	8.24559	No
SLV 5	-16856	-29519	-783	0.021	2584.9	0.916	0.33294	8.24559	No
SLV 6	-16856	-29519	-783	0.021	2584.9	0.916	0.33294	8.24559	No
SLV 12	-11504	-15216	649	0.021	2053.7	0.902	0.34226	8.24559	No
SLV 11	-11504	-15216	649	0.021	2053.7	0.902	0.34226	8.24559	No
SLV 8	-14575	-18434	672	0.024	2357.4	0.91	0.38009	8.24559	No
SLV 7	-14575	-18434	672	0.024	2357.4	0.91	0.38009	8.24559	No
SLV 14	-9402	-18668	-322	0.04	1848.6	0.896	0.64755	9.07197	No
SLV 13	-9402	-18668	-322	0.04	1848.6	0.896	0.64755	9.07197	No

Tabella dei coefficienti di sicurezza minimi

Stato limite	Coeff.s.	Comb.	Verifica
PF_SLU	7.303	SLU 39	Si
V_SLU	9.727	SLU 73	Si
PF_SLV	1.141	SLV 15	Si
V_SLV	0.457	SLV 15	No
PFFP_SLV	2.097	SLV 15	Si
R_SLV	0.031	SLV 9	No

Maschio 234

Verifiche condotte secondo D.M. 17-01-18 (N.T.C.)

Dati geometrici

X ini.	Y ini.	X fin.	Y fin.	Quota i.	Quota.s	l	Sp.	h netta	h ini.	h fin.	a	a.s.,sx	a.s.,dx
-4.93	1.141	-11.865	1.141	L6	L7	6.935	0.28	3.1	3.1	3.1			

Caratteristiche del materiale

(Circolare 7 21-01-19 C8.5.I) Muratura in mattoni pieni e malta di calce LC2_Corti

fb	fk	fvk0	fmedio	τ0	fv0	μ	ϕ	fv,lim	E	G	FC
600000			345000	9000	20000	0.58	0.77	32500	320000000	128000000	1.2

Verifica a pressoflessione nel piano secondo D.M. 17-01-18 NTC §7.8.2.2.1 in combinazioni non sismiche, γM = 3

Comb.	Quota	N	M	σ0	Mu	c.s.	Verifica
SLU 37	12.05	-36424	-2077.8	18758	97217.24	46.789	Si
SLU 37	14.55	-33175	-8019.84	17085	90908.35	11.335	Si
SLU 30	12.05	-37463	-3173.23	19293	99135.7	31.241	Si
SLU 30	14.55	-33470	-8609.04	17237	91500.05	10.628	Si
SLU 29	12.05	-37436	-2468.98	19279	99086.4	40.132	Si
SLU 29	14.55	-33433	-8282.26	17218	91425.89	11.039	Si
SLU 28	12.05	-38770	-2943.44	19966	101484.3	34.478	Si
SLU 28	14.55	-34874	-8223.84	17959	94263.61	11.462	Si
SLU 38	12.05	-36451	-2782.05	18772	97267.74	34.963	Si
SLU 38	14.55	-33212	-8346.62	17104	90982.93	10.901	Si
SLU 16	12.05	-34816	-2420.46	17930	94152.48	38.899	Si
SLU 16	14.55	-31099	-7484.19	16015	86633.71	11.576	Si
SLU 17	12.05	-34843	-3124.7	17944	94204.88	30.148	Si
SLU 17	14.55	-31136	-7810.97	16035	86711.67	11.101	Si
SLU 8	12.05	-35828	-2811.64	18451	96092.94	34.177	Si
SLU 8	14.55	-31357	-7746.61	16148	87174.72	11.253	Si
SLU 9	12.05	-35855	-3515.89	18465	96144.14	27.346	Si
SLU 9	14.55	-31394	-8073.39	16167	87252.26	10.807	Si

Comb.	Quota	N	M	σ0	Mu	c.s.	Verifica
SLU 7	12.05	-37162	-3286.1	19138	98584.93	30.001	Si
SLU 7	14.55	-32797	-7688.19	16890	90143.58	11.725	Si

Verifica a pressoflessione nel piano secondo D.M. 17-01-18 NTC §7.8.2.2.1 in combinazioni sismiche, γM = 2

Comb.	Quota	N	M	σ0	Mu	c.s.	Verifica
SLV 13	12.05	-34886	-3156.91	17966	103181.18	32.684	Si
SLV 13	14.55	-30194	25143.39	15549	91373.09	3.634	Si
SLV 7	12.05	-20595	-4552.51	10606	65214.81	14.325	Si
SLV 7	14.55	-18761	-11160.47	9662	59910.58	5.368	Si
SLV 14	12.05	-34886	-3156.91	17966	103181.18	32.684	Si
SLV 14	14.55	-30194	25143.39	15549	91373.09	3.634	Si
SLV 4	12.05	-19310	3545.99	9945	61509.23	17.346	Si
SLV 4	14.55	-13272	-26302.27	6835	43445.86	1.652	Si
SLV 15	12.05	-32139	-6949.76	16551	96345.97	13.863	Si
SLV 15	14.55	-29908	23254.92	15402	90633.54	3.897	Si
SLV 16	12.05	-32139	-6949.76	16551	96345.97	13.863	Si
SLV 16	14.55	-29908	23254.92	15402	90633.54	3.897	Si
SLV 3	12.05	-19310	3545.99	9945	61509.23	17.346	Si
SLV 3	14.55	-13272	-26302.27	6835	43445.86	1.652	Si
SLV 2	12.05	-22058	7338.83	11359	69374.58	9.453	Si
SLV 2	14.55	-13557	-24413.8	6982	44324.31	1.816	Si
SLV 8	12.05	-20595	-4552.51	10606	65214.81	14.325	Si
SLV 8	14.55	-18761	-11160.47	9662	59910.58	5.368	Si
SLV 1	12.05	-22058	7338.83	11359	69374.58	9.453	Si
SLV 1	14.55	-13557	-24413.8	6982	44324.31	1.816	Si

Verifica a taglio nel piano secondo D.M. 17-01-18 (N.T.C.) §7.8.2.2.2 con rottura per scorrimento in combinazioni non sismiche, γM = 3

Comb.	Quota	N	V par	M	σ0	σN	l'	fvd	Vt scorr.	Vt fess.diag.	Vt,lim	c.s.	Verifica
SLU 60	12.05	-33010	-1657	421.69		17000	6.935	7822	15189			9.17	Si
SLU 60	14.55	-26497	-3209	-93.25		13645	6.935	7375	14321			4.46	Si
SLU 39	12.05	-27091	-1317	886.36		13952	6.935	7416	14400			10.94	Si
SLU 39	14.55	-22921	-3195	-662.14		11804	6.935	7129	13844			4.33	Si
SLU 82	12.05	-34645	-1813	60.09		17842	6.935	7934	15407			8.5	Si
SLU 82	14.55	-28610	-3786	-955.67		14734	6.935	7520	14602			3.86	Si
SLU 52	12.05	-33488	-1864	-919.71		17246	6.935	7855	15253			8.18	Si
SLU 52	14.55	-26669	-3219	-750.34		13734	6.935	7387	14344			4.46	Si
SLU 81	12.05	-34618	-1598	764.34		17828	6.935	7933	15404			9.64	Si
SLU 81	14.55	-28573	-3562	-628.9		14715	6.935	7518	14598			4.1	Si
SLU 61	12.05	-33037	-1871	-282.56		17014	6.935	7824	15193			8.12	Si
SLU 61	14.55	-26534	-3433	-420.02		13665	6.935	7377	14326			4.17	Si
SLU 73	12.05	-35097	-1805	-577.06		18074	6.935	7965	15467			8.57	Si
SLU 73	14.55	-28746	-3572	-1285.99		14804	6.935	7529	14621			4.09	Si
SLU 19	12.05	-25510	-1589	-160.54		13137	6.935	7307	14189			8.93	Si
SLU 19	14.55	-20882	-3066	-453.26		10754	6.935	6989	13572			4.43	Si
SLU 40	12.05	-27118	-1531	182.12		13966	6.935	7418	14404			9.41	Si
SLU 40	14.55	-22958	-3419	-988.91		11823	6.935	7132	13849			4.05	Si
SLU 31	12.05	-27570	-1524	-455.03		14198	6.935	7449	14464			9.49	Si
SLU 31	14.55	-23094	-3204	-1319.23		11893	6.935	7141	13867			4.33	Si

Verifica a taglio nel piano secondo D.M. 17-01-18 (N.T.C.) §7.8.2.2.2 con rottura per scorrimento in combinazioni sismiche, γM = 2

Comb.	Quota	N	V par	M	σ0	σN	l'	fvd	Vt scorr.	Vt fess.diag.	Vt,lim	c.s.	Verifica
SLV 2	12.05	-22058	17593	7338.83		11359	6.935	10605	20593			1.17	Si
SLV 2	14.55	-13557	11660	-24413.8		9683	5.0002	10270	14379			1.23	Si
SLV 13	12.05	-34886	-19022	-3156.91		17966	6.935	11927	23159			1.22	Si
SLV 13	14.55	-30194	-13604	25143.39		15549	6.935	11443	22220			1.63	Si
SLV 12	12.05	-24444	-7257	-7701.24		12588	6.935	10851	21070			2.9	Si
SLV 12	14.55	-23752	-9093	3706.69		12232	6.935	10780	20932			2.3	Si
SLV 4	12.05	-19310	17108	3545.99		9945	6.935	10322	20044			1.17	Si
SLV 4	14.55	-13272	9661	-26302.27		10635	4.4571	10460	13054			1.35	Si
SLV 14	12.05	-34886	-19022	-3156.91		17966	6.935	11927	23159			1.22	Si
SLV 14	14.55	-30194	-13604	25143.39		15549	6.935	11443	22220			1.63	Si
SLV 16	12.05	-32139	-19507	-6949.76		16551	6.935	11644	22609			1.16	Si
SLV 16	14.55	-29908	-15603	23254.92		15402	6.935	11414	22163			1.42	Si
SLV 3	12.05	-19310	17108	3545.99		9945	6.935	10322	20044			1.17	Si
SLV 3	14.55	-13272	9661	-26302.27		10635	4.4571	10460	13054			1.35	Si
SLV 15	12.05	-32139	-19507	-6949.76		16551	6.935	11644	22609			1.16	Si
SLV 15	14.55	-29908	-15603	23254.92		15402	6.935	11414	22163			1.42	Si
SLV 1	12.05	-22058	17593	7338.83		11359	6.935	10605	20593			1.17	Si
SLV 1	14.55	-13557	11660	-24413.8		9683	5.0002	10270	14379			1.23	Si
SLV 11	12.05	-24444	-7257	-7701.24		12588	6.935	10851	21070			2.9	Si
SLV 11	14.55	-23752	-9093	3706.69		12232	6.935	10780	20932			2.3	Si

Verifica a pressoflessione fuori piano D.M. 17-01-18 (N.T.C.)

quota 13.6 Wa 0.05 denominatore 8 γM = 2

Comb.	fd	Sa	σ0	N	M	Mc	Coeff.s.	Verifica
SLV 4	143750	0.53	9080	-17632	773.44	2285.04	2.95	Si
SLV 3	143750	0.53	9080	-17632	773.44	2285.04	2.95	Si
SLV 2	143750	0.53	9119	-17707	773.44	2293.93	2.97	Si
SLV 1	143750	0.53	9119	-17707	773.44	2293.93	2.97	Si
SLV 8	143750	0.53	11527	-22384	773.44	2838.11	3.67	Si
SLV 7	143750	0.53	11527	-22384	773.44	2838.11	3.67	Si
SLV 5	143750	0.53	11655	-22633	773.44	2866.31	3.71	Si
SLV 6	143750	0.53	11655	-22633	773.44	2866.31	3.71	Si
SLV 11	143750	0.53	13663	-26532	773.44	3299.07	4.27	Si
SLV 12	143750	0.53	13663	-26532	773.44	3299.07	4.27	Si

Verifica dei meccanismi locali di collasso con analisi cinematica lineare

forza di aggancio al piano = 0 quota mezzeria = 13.6 Wa = 0.05 Ta = 0.0573

Comb.	N top	N base	V orto	α0	M*	e*	a0*	aLim	Verifica

Comb.	N top	N base	V orto	α0	M*	e*	a0*	aLim	Verifica
SLV 5	-17828	-29753	-418	0.038	2682.1	0.918	0.59663	8.24559	No
SLV 6	-17828	-29753	-418	0.038	2682.1	0.918	0.59663	8.24559	No
SLV 9	-21518	-33601	-422	0.039	3052.8	0.926	0.60589	8.24559	No
SLV 10	-21518	-33601	-422	0.039	3052.8	0.926	0.60589	8.24559	No
SLV 8	-16859	-20595	325	0.042	2585.2	0.916	0.65925	8.24559	No
SLV 7	-16859	-20595	325	0.042	2585.2	0.916	0.65925	8.24559	No
SLV 11	-20550	-24444	322	0.042	2955.3	0.924	0.66358	8.24559	No
SLV 12	-20550	-24444	322	0.042	2955.3	0.924	0.66358	8.24559	No
SLV 14	-25485	-34886	-165	0.048	3452.8	0.933	0.74392	9.07197	No
SLV 13	-25485	-34886	-165	0.048	3452.8	0.933	0.74392	9.07197	No

Tabella dei coefficienti di sicurezza minimi

Stato limite	Coeff.s.	Comb.	Verifica
PF_SLU	10.628	SLU 30	Si
V_SLU	3.857	SLU 82	Si
PF_SLV	1.652	SLV 3	Si
V_SLV	1.159	SLV 15	Si
PFFP_SLV	2.954	SLV 3	Si
R_SLV	0.072	SLV 5	No

Maschio 235

Verifiche condotte secondo D.M. 17-01-18 (N.T.C.)

Dati geometrici

X ini.	Y ini.	X fin.	Y fin.	Quota i.	Quota.s	l	Sp.	h netta	h ini.	h fin.	a	a.s.,sx	a.s.,dx
-0.117	1.141	-4.13	1.141	L6	L7	4.013	0.28	3.1	3.1	3.1			

Caratteristiche del materiale

(Circolare 7 21-01-19 C8.5.I) Muratura in mattoni pieni e malta di calce LC2_Corti

fb	fk	fvk0	fmedio	τ0	fv0	μ	ϕ	fv,lim	E	G	FC
600000			345000	9000	20000	0.58	0.77	32500	320000000	128000000	1.2

Verifica a pressoflessione nel piano secondo D.M. 17-01-18 NTC §7.8.2.2.1 in combinazioni non sismiche, γM = 3

Comb.	Quota	N	M	σ0	Mu	c.s.	Verifica
SLU 80	12.05	-10446	1434.07	9297	18565.79	12.946	Si
SLU 80	14.15	-9205	8803.8	8193	16611.22	1.887	Si
SLU 30	12.05	-8987	1451.33	7999	16260.15	11.204	Si
SLU 30	14.15	-7628	7385.27	6789	14028.81	1.9	Si
SLU 41	12.05	-6906	677.96	6147	12810.34	18.895	Si
SLU 41	14.15	-7044	6912.89	6269	13044.45	1.887	Si
SLU 17	12.05	-8236	1228.8	7330	15036.23	12.237	Si
SLU 17	14.15	-7115	6954.12	6332	13164.42	1.893	Si
SLU 79	12.05	-10438	1381.89	9290	18552.79	13.426	Si
SLU 79	14.15	-9198	8830.58	8186	16598.97	1.88	Si
SLU 29	12.05	-8979	1399.15	7991	16246.61	11.612	Si
SLU 29	14.15	-7620	7412.05	6783	14016.03	1.891	Si
SLU 37	12.05	-7995	1121.61	7116	14638.75	13.052	Si
SLU 37	14.15	-7686	7868.89	6841	14125.49	1.795	Si
SLU 16	12.05	-8227	1176.61	7323	15022.41	12.767	Si
SLU 16	14.15	-7107	6980.9	6325	13151.47	1.884	Si
SLU 38	12.05	-8003	1173.79	7123	14652.65	12.483	Si
SLU 38	14.15	-7694	7842.1	6848	14138.24	1.803	Si
SLU 42	12.05	-6915	730.14	6154	12824.65	17.565	Si
SLU 42	14.15	-7051	6886.1	6276	13057.42	1.896	Si

Verifica a pressoflessione nel piano secondo D.M. 17-01-18 NTC §7.8.2.2.1 in combinazioni sismiche, γM = 2

Comb.	Quota	N	M	σ0	Mu	c.s.	Verifica
SLV 14	12.05	-8822	-1178.56	7852	16562.86	14.053	Si
SLV 14	14.15	-8571	10258.62	7628	16122.17	1.572	Si
SLV 16	12.05	-8899	-635.35	7920	16696.24	26.279	Si
SLV 16	14.15	-7895	8841.88	7027	14928.3	1.688	Si
SLV 11	12.05	-8056	1130.09	7170	15214.67	13.463	Si
SLV 11	14.15	-5462	3727.14	4862	10523.3	2.823	Si
SLV 9	12.05	-7802	-680.63	6944	14763.12	21.69	Si
SLV 9	14.15	-7716	8449.61	6868	14611.15	1.729	Si
SLV 5	12.05	-7003	289.39	6233	13333.87	46.076	Si
SLV 5	14.15	-6308	5482.3	5614	12073.75	2.202	Si
SLV 10	12.05	-7802	-680.63	6944	14763.12	21.69	Si
SLV 10	14.15	-7716	8449.61	6868	14611.15	1.729	Si
SLV 6	12.05	-7003	289.39	6233	13333.87	46.076	Si
SLV 6	14.15	-6308	5482.3	5614	12073.75	2.202	Si
SLV 12	12.05	-8056	1130.09	7170	15214.67	13.463	Si
SLV 12	14.15	-5462	3727.14	4862	10523.3	2.823	Si
SLV 13	12.05	-8822	-1178.56	7852	16562.86	14.053	Si
SLV 13	14.15	-8571	10258.62	7628	16122.17	1.572	Si
SLV 15	12.05	-8899	-635.35	7920	16696.24	26.279	Si
SLV 15	14.15	-7895	8841.88	7027	14928.3	1.688	Si

Verifica a taglio nel piano secondo D.M. 17-01-18 (N.T.C.) §7.8.2.2.2 con rottura per scorrimento in combinazioni non sismiche, γM = 3

Comb.	Quota	N	V par	M	σ0	σN	l'	fvd	Vt scorr.	Vt fess.diag.	Vt,lim	c.s.	Verifica
SLU 37	12.05	-7995	-7050	1121.61		7116	4.0126	6504	7308			1.04	Si
SLU 37	14.15	-7686	-7050	7868.89		9313	2.9476	6797	5610			0.8	No, Vu<V
SLU 80	12.05	-10446	-7605	1434.07		9297	4.0126	6795	7635			1	Si
SLU 80	14.15	-9205	-7627	8803.8		10438	3.1498	6947	6127			0.8	No, Vu<V
SLU 38	12.05	-8003	-7000	1173.79		7123	4.0126	6505	7309			1.04	Si

Comb.	Quota	N	V par	M	σ0	σN	l'	fvd	Vt scorr.	Vt fess.diag.	Vt,lim	c.s.	Verifica
SLU 38	14.15	-7694	-7023	7842.1		9280	2.9611	6793	5632			0.8	No, Vu<V
SLU 83	12.05	-9349	-7837	938.25		8321	4.0126	6665	7488			0.96	No, Vu<V
SLU 83	14.15	-8556	-7836	7874.58		9379	3.2577	6806	6208			0.79	No, Vu<V
SLU 77	12.05	-11395	-7821	1711.66		10142	4.0126	6908	7761			0.99	No, Vu<V
SLU 77	14.15	-10391	-7820	9035.49		10882	3.4103	7006	6690			0.86	No, Vu<V
SLU 41	12.05	-6906	-7232	677.96		6147	4.0126	6375	7163			0.99	No, Vu<V
SLU 41	14.15	-7044	-7232	6912.89		8182	3.0747	6646	5722			0.79	No, Vu<V
SLU 84	12.05	-9357	-7787	990.43		8328	4.0126	6666	7490			0.96	No, Vu<V
SLU 84	14.15	-8563	-7809	7847.79		9354	3.2696	6803	6228			0.8	No, Vu<V
SLU 79	12.05	-10438	-7655	1381.89		9290	4.0126	6794	7634			1	No, Vu<V
SLU 79	14.15	-9198	-7654	8830.58		10466	3.1387	6951	6109			0.8	No, Vu<V
SLU 78	12.05	-11403	-7771	1763.84		10149	4.0126	6909	7762			1	No, Vu<V
SLU 78	14.15	-10399	-7793	9008.71		10859	3.42	7003	6706			0.86	No, Vu<V
SLU 42	12.05	-6915	-7182	730.14		6154	4.0126	6376	7164			1	No, Vu<V
SLU 42	14.15	-7051	-7205	6886.1		8152	3.0893	6642	5746			0.8	No, Vu<V

Verifica a taglio nel piano secondo D.M. 17-01-18 (N.T.C.) §7.8.2.2.2 con rottura per scorrimento in combinazioni sismiche, γM = 2

Comb.	Quota	N	V par	M	σ0	σN	l'	fvd	Vt scorr.	Vt fess.diag.	Vt,lim	c.s.	Verifica
SLV 6	12.05	-7003	-5297	289.39		6233	4.0126	9580	10763			2.03	Si
SLV 6	14.15	-6308	-5933	5482.3		6603	3.4115	9654	9222			1.55	Si
SLV 14	12.05	-8822	-9980	-1178.56		7852	4.0126	9904	11127			1.12	Si
SLV 14	14.15	-8571	-7443	10258.62		12606	2.4282	10855	7380			0.99	No, Vu<V
SLV 11	12.05	-8056	-3358	1130.09		7170	4.0126	9767	10974			3.27	Si
SLV 11	14.15	-5462	-2721	3727.14		4912	3.972	9316	10360			3.81	Si
SLV 10	12.05	-7802	-8248	-680.63		6944	4.0126	9722	10923			1.32	Si
SLV 10	14.15	-7716	-7383	8449.61		10080	2.7338	10349	7922			1.07	Si
SLV 16	12.05	-8899	-8512	-635.35		7920	4.0126	9917	11143			1.31	Si
SLV 16	14.15	-7895	-6044	8841.88		10604	2.659	10454	7783			1.29	Si
SLV 9	12.05	-7802	-8248	-680.63		6944	4.0126	9722	10923			1.32	Si
SLV 9	14.15	-7716	-7383	8449.61		10080	2.7338	10349	7922			1.07	Si
SLV 15	12.05	-8899	-8512	-635.35		7920	4.0126	9917	11143			1.31	Si
SLV 15	14.15	-7895	-6044	8841.88		10604	2.659	10454	7783			1.29	Si
SLV 5	12.05	-7003	-5297	289.39		6233	4.0126	9580	10763			2.03	Si
SLV 5	14.15	-6308	-5933	5482.3		6603	3.4115	9654	9222			1.55	Si
SLV 13	12.05	-8822	-9980	-1178.56		7852	4.0126	9904	11127			1.12	Si
SLV 13	14.15	-8571	-7443	10258.62		12606	2.4282	10855	7380			0.99	No, Vu<V
SLV 12	12.05	-8056	-3358	1130.09		7170	4.0126	9767	10974			3.27	Si
SLV 12	14.15	-5462	-2721	3727.14		4912	3.972	9316	10360			3.81	Si

Verifica a pressoflessione fuori piano D.M. 17-01-18 (N.T.C.)

quota 13.6 Wa 0.05 denominatore 8 γM = 2

Comb.	fd	Sa	σ0	N	M	Mc	Coeff.s.	Verifica
SLV 4	143750	0.53	3520	-3955	447.52	537.8	1.2	Si
SLV 3	143750	0.53	3520	-3955	447.52	537.8	1.2	Si
SLV 2	143750	0.53	3925	-4410	447.52	597.54	1.34	Si
SLV 1	143750	0.53	3925	-4410	447.52	597.54	1.34	Si
SLV 8	143750	0.53	4404	-4949	447.52	667.82	1.49	Si
SLV 7	143750	0.53	4404	-4949	447.52	667.82	1.49	Si
SLV 11	143750	0.53	5567	-6254	447.52	835.71	1.87	Si
SLV 12	143750	0.53	5567	-6254	447.52	835.71	1.87	Si
SLV 5	143750	0.53	5753	-6463	447.52	862.27	1.93	Si
SLV 6	143750	0.53	5753	-6463	447.52	862.27	1.93	Si

Verifica dei meccanismi locali di collasso con analisi cinematica lineare

forza di aggancio al piano = 0 quota mezzeria = 13.6 Wa = 0.05 Ta = 0.0573

Comb.	N top	N base	V orto	α0	M*	e*	a0*	aLim	Verifica
SLV 14	-1646	-8822	101	0.054	725	0.899	0.86726	9.07197	No
SLV 13	-1646	-8822	101	0.054	725	0.899	0.86726	9.07197	No
SLV 4	-1614	-6237	-98	0.054	722.6	0.899	0.87809	9.07197	No
SLV 3	-1614	-6237	-98	0.054	722.6	0.899	0.87809	9.07197	No
SLV 16	-1621	-8899	78	0.059	723.1	0.899	0.94589	9.07197	No
SLV 15	-1621	-8899	78	0.059	723.1	0.899	0.94589	9.07197	No
SLV 2	-1639	-6161	-75	0.059	724.5	0.899	0.95582	9.07197	No
SLV 1	-1639	-6161	-75	0.059	724.5	0.899	0.95582	9.07197	No
SLV 10	-1672	-7802	66	0.061	727.1	0.898	0.98395	8.24559	No
SLV 9	-1672	-7802	66	0.061	727.1	0.898	0.98395	8.24559	No

Tabella dei coefficienti di sicurezza minimi

Stato limite	Coeff.s.	Comb.	Verifica
PF_SLU	1.795	SLU 37	Si
V_SLU	0.791	SLU 41	No
PF_SLV	1.572	SLV 13	Si
V_SLV	0.992	SLV 13	No
PFFP_SLV	1.202	SLV 3	Si
R_SLV	0.096	SLV 13	No

Maschio 236

Verifiche condotte secondo D.M. 17-01-18 (N.T.C.)

Dati geometrici

X ini.	Y ini.	X fin.	Y fin.	Quota i.	Quota.s	l	Sp.	h netta	h ini.	h fin.	a	a.s.,sx	a.s.,dx
-10.74	3.3	-15.01	3.3	L6	L7	4.27	0.14	3.1	3.1	3.1			

Caratteristiche del materiale

(Circolare 7 21-01-19 C8.5.I) Muratura in mattoni pieni e malta di calce LC2_Corti

fb	fk	fvk0	fmedio	τ0	fv0	μ	ϕ	fv,lim	E	G	FC
600000			345000	9000	20000	0.58	0.77	32500	320000000	128000000	1.2

Verifica a pressoflessione nel piano secondo D.M. 17-01-18 NTC §7.8.2.2.1 in combinazioni non sismiche, γM = 3

Comb.	Quota	N	M	σ0	Mu	c.s.	Verifica
SLU 8	12.05	-5517	232.25	9229	10444.01	44.969	Si
SLU 8	13.95	-2834	-986.8	4742	5699.32	5.776	Si
SLU 5	12.05	-5346	146.57	8943	10160.49	69.32	Si
SLU 5	13.95	-2755	-891.74	4608	5548.93	6.223	Si
SLU 7	12.05	-6225	-54.71	10413	11591.48	211.887	Si
SLU 7	13.95	-3613	-1139.12	6043	7140.71	6.269	Si
SLU 51	12.05	-7073	242.37	11831	12906.97	53.254	Si
SLU 51	13.95	-3620	-1272.09	6055	7153.5	5.623	Si
SLU 47	12.05	-6909	160.77	11557	12657.24	78.731	Si
SLU 47	13.95	-3543	-1180.07	5927	7014.55	5.944	Si
SLU 50	12.05	-7080	246.44	11843	12917.33	52.415	Si
SLU 50	13.95	-3623	-1275.13	6060	7159.43	5.615	Si
SLU 6	12.05	-6232	-50.63	10425	11602.34	229.165	Si
SLU 6	13.95	-3616	-1142.16	6049	7146.64	6.257	Si
SLU 48	12.05	-7795	-36.44	13039	13977.68	383.621	Si
SLU 48	13.95	-4404	-1430.48	7368	8552.73	5.979	Si
SLU 49	12.05	-7788	-40.51	13028	13967.75	344.769	Si
SLU 49	13.95	-4401	-1427.45	7362	8547.02	5.988	Si
SLU 9	12.05	-5510	228.17	9217	10432.71	45.723	Si
SLU 9	13.95	-2831	-983.77	4736	5693.17	5.787	Si

Verifica a pressoflessione nel piano secondo D.M. 17-01-18 NTC §7.8.2.2.1 in combinazioni sismiche, γM = 2

Comb.	Quota	N	M	σ0	Mu	c.s.	Verifica
SLV 14	12.05	-5101	-130.44	8534	10130.8	77.666	Si
SLV 14	13.95	-1835	2058.42	3070	3819.63	1.856	Si
SLV 8	12.05	-5932	989.86	9922	11635.49	11.755	Si
SLV 8	13.95	-3204	-1819.56	5360	6540.51	3.595	Si
SLV 3	12.05	-5086	294.73	8508	10102.37	34.276	Si
SLV 3	13.95	-3450	-3427.74	5772	7018.61	2.048	Si
SLV 13	12.05	-5101	-130.44	8534	10130.8	77.666	Si
SLV 13	13.95	-1835	2058.42	3070	3819.63	1.856	Si
SLV 15	12.05	-5655	426	9460	11139.4	26.149	Si
SLV 15	13.95	-2045	1852.72	3422	4244.76	2.291	Si
SLV 1	12.05	-4532	-261.71	7581	9075.33	34.677	Si
SLV 1	13.95	-3240	-3222.05	5420	6610.75	2.052	Si
SLV 7	12.05	-5932	989.86	9922	11635.49	11.755	Si
SLV 7	13.95	-3204	-1819.56	5360	6540.51	3.595	Si
SLV 4	12.05	-5086	294.73	8508	10102.37	34.276	Si
SLV 4	13.95	-3450	-3427.74	5772	7018.61	2.048	Si
SLV 16	12.05	-5655	426	9460	11139.4	26.149	Si
SLV 16	13.95	-2045	1852.72	3422	4244.76	2.291	Si
SLV 2	12.05	-4532	-261.71	7581	9075.33	34.677	Si
SLV 2	13.95	-3240	-3222.05	5420	6610.75	2.052	Si

Verifica a taglio nel piano secondo D.M. 17-01-18 (N.T.C.) §7.8.2.2.2 con rottura per scorrimento in combinazioni non sismiche, γM = 3

Comb.	Quota	N	V par	M	σ0	σN	I'	fvd	Vt scorr.	Vt fess.diag.	Vt,lim	c.s.	Verifica
SLU 9	12.05	-5510	-46	228.17		9217	4.27	6785	4056			88.75	Si
SLU 9	13.95	-2831	-46	-983.77		4736	4.27	6187	3699			80.84	Si
SLU 50	12.05	-7080	-59	246.44		11843	4.27	7135	4265			72.47	Si
SLU 50	13.95	-3623	-59	-1275.13		6060	4.27	6364	3804			64.65	Si
SLU 48	12.05	-7795	-51	-36.44		13039	4.27	7294	4360			84.78	Si
SLU 48	13.95	-4404	-51	-1430.48		7368	4.27	6538	3908			75.99	Si
SLU 8	12.05	-5517	-46	232.25		9229	4.27	6786	4057			88.19	Si
SLU 8	13.95	-2834	-46	-986.8		4742	4.27	6188	3699			80.41	Si
SLU 43	12.05	-6761	-45	88.68		11309	4.27	7063	4222			94.35	Si
SLU 43	13.95	-3475	-45	-1095.13		5812	4.27	6331	3784			84.61	Si
SLU 49	12.05	-7788	-51	-40.51		13028	4.27	7293	4359			85.26	Si
SLU 49	13.95	-4401	-51	-1427.45		7362	4.27	6537	3908			76.35	Si
SLU 47	12.05	-6909	-51	160.77		11557	4.27	7096	4242			82.69	Si
SLU 47	13.95	-3543	-51	-1180.07		5927	4.27	6346	3794			73.86	Si
SLU 71	12.05	-7070	-49	270.23		11826	4.27	7132	4264			86.54	Si
SLU 71	13.95	-3674	-49	-1140.14		6145	4.27	6375	3811			77.28	Si
SLU 72	12.05	-7063	-49	266.15		11815	4.27	7131	4263			87.06	Si
SLU 72	13.95	-3670	-49	-1137.11		6140	4.27	6374	3810			77.67	Si
SLU 51	12.05	-7073	-59	242.37		11831	4.27	7133	4264			72.82	Si
SLU 51	13.95	-3620	-59	-1272.09		6055	4.27	6363	3804			64.93	Si

Verifica a taglio nel piano secondo D.M. 17-01-18 (N.T.C.) §7.8.2.2.2 con rottura per scorrimento in combinazioni sismiche, γM = 2

Comb.	Quota	N	V par	M	σ0	σN	I'	fvd	Vt scorr.	Vt fess.diag.	Vt,lim	c.s.	Verifica
SLV 3	12.05	-5086	2973	294.73		8508	4.27	10035	5999			2.02	Si
SLV 3	13.95	-3450	1893	-3427.74		7197	3.4247	9773	4686			2.47	Si
SLV 14	12.05	-5101	-3021	-130.44		8534	4.27	10040	6002			1.99	Si
SLV 14	13.95	-1835	-1941	2058.42		4312	3.04	9196	3914			2.02	Si
SLV 1	12.05	-4532	2906	-261.71		7581	4.27	9850	5888			2.03	Si
SLV 1	13.95	-3240	1871	-3222.05		6764	3.4217	9686	4640			2.48	Si
SLV 4	12.05	-5086	2973	294.73		8508	4.27	10035	5999			2.02	Si
SLV 4	13.95	-3450	1893	-3427.74		7197	3.4247	9773	4686			2.47	Si
SLV 10	12.05	-4256	-1023	-825.57		7119	4.27	9757	5833			5.7	Si
SLV 10	13.95	-2082	-633	450.23		3482	4.27	9030	5398			8.53	Si
SLV 9	12.05	-4256	-1023	-825.57		7119	4.27	9757	5833			5.7	Si
SLV 9	13.95	-2082	-633	450.23		3482	4.27	9030	5398			8.53	Si
SLV 16	12.05	-5655	-2954	426		9460	4.27	10225	6113			2.07	Si
SLV 16	13.95	-2045	-1919	1852.72		3962	3.6877	9126	4711			2.46	Si
SLV 15	12.05	-5655	-2954	426		9460	4.27	10225	6113			2.07	Si
SLV 15	13.95	-2045	-1919	1852.72		3962	3.6877	9126	4711			2.46	Si

Comb.	Quota	N	V par	M	σ0	σN	l'	fvd	Vt scorr.	Vt fess.diag.	Vt,lim	c.s.	Verifica
SLV 13	12.05	-5101	-3021	-130.44		8534	4.27	10040	6002			1.99	Si
SLV 13	13.95	-1835	-1941	2058.42		4312	3.04	9196	3914			2.02	Si
SLV 2	12.05	-4532	2906	-261.71		7581	4.27	9850	5888			2.03	Si
SLV 2	13.95	-3240	1871	-3222.05		6764	3.4217	9686	4640			2.48	Si

Verifica a pressoflessione fuori piano D.M. 17-01-18 (N.T.C.)

quota 13.6 Wa 0.03 denominatore 8 γM = 2

Comb.	fd	Sa	σ0	N	M	Mc	Coeff.s.	Verifica
SLV 16	143750	0.53	0	-2457	227.28	0	0	No, e>t/2
SLV 14	143750	0.53	0	-2257	227.28	0	0	No, e>t/2
SLV 5	143750	0.53	0	-2937	227.28	0	0	No, e>t/2
SLV 9	143750	0.53	0	-2516	227.28	0	0	No, e>t/2
SLV 10	143750	0.53	0	-2516	227.28	0	0	No, e>t/2
SLV 6	143750	0.53	0	-2937	227.28	0	0	No, e>t/2
SLV 12	143750	0.53	0	-3182	227.28	0	0	No, e>t/2
SLV 13	143750	0.53	0	-2257	227.28	0	0	No, e>t/2
SLV 15	143750	0.53	0	-2457	227.28	0	0	No, e>t/2
SLV 11	143750	0.53	0	-3182	227.28	0	0	No, e>t/2

Verifica dei meccanismi locali di collasso con analisi cinematica lineare

forza di aggancio al piano = 0 quota mezzeria = 13.6 Wa = 0.03 Ta = 0.1146

Comb.	N top	N base	V orto	α0	M*	e*	a0*	aLim	Verifica
SLV 2	-1019	-4532	63	0.013	397.1	0.895	0.21299	19.30799	No
SLV 1	-1019	-4532	63	0.013	397.1	0.895	0.21299	19.30799	No
SLV 15	-1048	-5655	-63	0.013	399.5	0.894	0.21496	19.30799	No
SLV 16	-1048	-5655	-63	0.013	399.5	0.894	0.21496	19.30799	No
SLV 14	-1020	-5101	-51	0.018	397.2	0.895	0.28858	19.30799	No
SLV 13	-1020	-5101	-51	0.018	397.2	0.895	0.28858	19.30799	No
SLV 4	-1047	-5086	51	0.018	399.4	0.894	0.28938	19.30799	No
SLV 3	-1047	-5086	51	0.018	399.4	0.894	0.28938	19.30799	No
SLV 6	-986	-4085	38	0.023	394.5	0.895	0.36533	16.84384	No
SLV 5	-986	-4085	38	0.023	394.5	0.895	0.36533	16.84384	No

Tabella dei coefficienti di sicurezza minimi

Stato limite	Coeff.s.	Comb.	Verifica
PF_SLU	5.615	SLU 50	Si
V_SLU	64.654	SLU 50	Si
PF_SLV	1.856	SLV 13	Si
V_SLV	1.987	SLV 13	Si
PFFP_SLV	0	SLV 5	No
R_SLV	0.011	SLV 1	No

Maschio 237

Verifiche condotte secondo D.M. 17-01-18 (N.T.C.)

Dati geometrici

X ini.	Y ini.	X fin.	Y fin.	Quota i.	Quota.s	l	Sp.	h netta	h ini.	h fin.	a	a.s.,sx	a.s.,dx
-9.72	3.3	-9.94	3.3	L6	L7	0.22	0.14	3.1	3.1	3.1			

Caratteristiche del materiale

(Circolare 7 21-01-19 C8.5.I) Muratura in mattoni pieni e malta di calce LC2_Corti

fb	fk	fvk0	fmedio	τ0	fv0	μ	ϕ	fv,lim	E	G	FC
600000			345000	9000	20000	0.58	0.77	32500	320000000	128000000	1.2

Verifica a pressoflessione nel piano secondo D.M. 17-01-18 NTC §7.8.2.2.1 in combinazioni non sismiche, γM = 3

Comb.	Quota	N	M	σ0	Mu	c.s.	Verifica
SLU 71	12.05	-712	16.6	23106	56.08	3.379	Si
SLU 71	13.95	-24	-14.03	0	0	0	No, e>l/2
SLU 64	12.05	-616	11.5	19991	51.11	4.443	Si
SLU 64	13.95	-81	-9.15	0	0	0	No, e>l/2
SLU 68	12.05	-661	13.88	21451	53.54	3.858	Si
SLU 68	13.95	-54	-11.44	0	0	0	No, e>l/2
SLU 44	12.05	-643	15.77	20875	52.6	3.335	Si
SLU 44	13.95	-25	-12.91	0	0	0	No, e>l/2
SLU 69	12.05	-701	13.97	22766	55.57	3.977	Si
SLU 69	13.95	-88	-10.77	0	0	0	No, e>l/2
SLU 30	12.05	-553	11.64	17948	47.41	4.073	Si
SLU 30	13.95	-35	-9.89	0	0	0	No, e>l/2
SLU 45	12.05	-683	15.87	22190	54.7	3.447	Si
SLU 45	13.95	-58	-12.24	0	0	0	No, e>l/2
SLU 43	12.05	-646	15.95	20973	52.76	3.309	Si
SLU 43	13.95	-23	-13.06	0	0	0	No, e>l/2
SLU 1	12.05	-489	11.09	15874	43.3	3.903	Si
SLU 1	13.95	-33	-9.02	0	0	0	No, e>l/2
SLU 29	12.05	-555	11.75	18007	47.52	4.046	Si
SLU 29	13.95	-34	-9.98	0	0	0	No, e>l/2

Verifica a pressoflessione nel piano secondo D.M. 17-01-18 NTC §7.8.2.2.1 in combinazioni sismiche, γM = 2

Comb.	Quota	N	M	σ0	Mu	c.s.	Verifica
SLV 3	12.05	-1496	94.21	48569	99.14	1.052	Si
SLV 3	13.95	539	-31.64	0	0	0	No, Trazione
SLV 11	12.05	-491	-2.47	15949	46.98	19.038	Si
SLV 11	13.95	-60	-11.94	0	0	0	No, e>l/2
SLV 12	12.05	-491	-2.47	15949	46.98	19.038	Si

Comb.	Quota	N	M	σ0	Mu	c.s.	Verifica
SLV 12	13.95	-60	-11.94	0	0	0	No, e>l/2
SLV 8	12.05	-1058	46.89	34361	83.68	1.785	Si
SLV 8	13.95	276	-25.12	0	0	0	No, Trazione
SLV 4	12.05	-1496	94.21	48569	99.14	1.052	Si
SLV 4	13.95	539	-31.64	0	0	0	No, Trazione
SLV 7	12.05	-1058	46.89	34361	83.68	1.785	Si
SLV 7	13.95	276	-25.12	0	0	0	No, Trazione
SLV 9	12.05	149	-31.81	0	0	0	No, Trazione
SLV 9	13.95	-426	13.36	13823	41.53	3.109	Si
SLV 2	12.05	-1304	85.4	42334	93.73	1.098	Si
SLV 2	13.95	430	-24.05	0	0	0	No, Trazione
SLV 1	12.05	-1304	85.4	42334	93.73	1.098	Si
SLV 1	13.95	430	-24.05	0	0	0	No, Trazione
SLV 10	12.05	149	-31.81	0	0	0	No, Trazione
SLV 10	13.95	-426	13.36	13823	41.53	3.109	Si

Verifica a taglio nel piano secondo D.M. 17-01-18 (N.T.C.) §7.8.2.2.2 con rottura per scorrimento in combinazioni non sismiche, γM = 3

Comb.	Quota	N	V par	M	σ0	σN	l'	fvd	Vt scorr.	Vt fess.diag.	Vt,lim	c.s.	Verifica
SLU 70	12.05	-699	40	13.87		22707	0.22	8583	264			6.57	Si
SLU 70	13.95	-89	41	-10.68		0	0	5556	0			0	No, Vu<V
SLU 71	12.05	-712	48	16.6		23106	0.22	8636	266			5.55	Si
SLU 71	13.95	-24	48	-14.03		0	0	5556	0			0	No, Vu<V
SLU 43	12.05	-646	43	15.95		20973	0.22	8352	257			5.93	Si
SLU 43	13.95	-23	44	-13.06		0	0	5556	0			0	No, Vu<V
SLU 45	12.05	-683	43	15.87		22190	0.22	8514	262			6.08	Si
SLU 45	13.95	-58	43	-12.24		0	0	5556	0			0	No, Vu<V
SLU 29	12.05	-555	35	11.75		18007	0.22	7957	245			6.93	Si
SLU 29	13.95	-34	36	-9.98		0	0	5556	0			0	No, Vu<V
SLU 1	12.05	-489	31	11.09		15874	0.22	7672	236			7.66	Si
SLU 1	13.95	-33	31	-9.02		0	0	5556	0			0	No, Vu<V
SLU 68	12.05	-661	40	13.88		21451	0.22	8416	259			6.42	Si
SLU 68	13.95	-54	41	-11.44		0	0	5556	0			0	No, Vu<V
SLU 44	12.05	-643	43	15.77		20875	0.22	8339	257			5.99	Si
SLU 44	13.95	-25	43	-12.91		0	0	5556	0			0	No, Vu<V
SLU 69	12.05	-701	41	13.97		22766	0.22	8591	265			6.53	Si
SLU 69	13.95	-88	41	-10.77		0	0	5556	0			0	No, Vu<V
SLU 30	12.05	-553	35	11.64		17948	0.22	7949	245			6.98	Si
SLU 30	13.95	-35	35	-9.89		0	0	5556	0			0	No, Vu<V

Verifica a taglio nel piano secondo D.M. 17-01-18 (N.T.C.) §7.8.2.2.2 con rottura per scorrimento in combinazioni sismiche, γM = 2

Comb.	Quota	N	V par	M	σ0	σN	l'	fvd	Vt scorr.	Vt fess.diag.	Vt,lim	c.s.	Verifica
SLV 2	12.05	-1304	246	85.4		69763	0.1335	16250	304			1.24	Si
SLV 2	13.95	430	-81	-24.05		0	0	8333	0			0	No, Vu<V
SLV 12	12.05	-491	19	-2.47		15949	0.22	11523	355			19.16	Si
SLV 12	13.95	-60	122	-11.94		0	0	8333	0			0	No, Vu<V
SLV 9	12.05	149	-119	-31.81		0	0	8333	0			0	No, Vu<V
SLV 9	13.95	-426	-26	13.36		13823	0.22	11098	342			12.93	Si
SLV 8	12.05	-1058	165	46.89		38357	0.1971	16005	442			2.68	Si
SLV 8	13.95	276	73	-25.12		0	0	8333	0			0	No, Vu<V
SLV 3	12.05	-1496	287	94.21		75742	0.1411	16250	321			1.12	Si
SLV 3	13.95	539	-37	-31.64		0	0	8333	0			0	No, Vu<V
SLV 4	12.05	-1496	287	94.21		75742	0.1411	16250	321			1.12	Si
SLV 4	13.95	539	-37	-31.64		0	0	8333	0			0	No, Vu<V
SLV 7	12.05	-1058	165	46.89		38357	0.1971	16005	442			2.68	Si
SLV 7	13.95	276	73	-25.12		0	0	8333	0			0	No, Vu<V
SLV 10	12.05	149	-119	-31.81		0	0	8333	0			0	No, Vu<V
SLV 10	13.95	-426	-26	13.36		13823	0.22	11098	342			12.93	Si
SLV 1	12.05	-1304	246	85.4		69763	0.1335	16250	304			1.24	Si
SLV 1	13.95	430	-81	-24.05		0	0	8333	0			0	No, Vu<V
SLV 11	12.05	-491	19	-2.47		15949	0.22	11523	355			19.16	Si
SLV 11	13.95	-60	122	-11.94		0	0	8333	0			0	No, Vu<V

Verifica a pressoflessione fuori piano D.M. 17-01-18 (N.T.C.)

quota 13.6 Wa 0.03 denominatore 8 γM = 2

Comb.	fd	Sa	σ0	N	M	Mc	Coeff.s.	Verifica
SLV 11	143750	0.53	0	-94	11.71	0	0	No, e>t/2
SLV 5	143750	0.53	0	-98	11.71	0	0	No, e>t/2
SLV 2	143750	0.53	0	410	11.71	0	0	No, Trazione
SLV 8	143750	0.53	0	240	11.71	0	0	No, Trazione
SLV 3	143750	0.53	0	512	11.71	0	0	No, Trazione
SLV 4	143750	0.53	0	512	11.71	0	0	No, Trazione
SLV 1	143750	0.53	0	410	11.71	0	0	No, Trazione
SLV 7	143750	0.53	0	240	11.71	0	0	No, Trazione
SLV 6	143750	0.53	0	-98	11.71	0	0	No, e>t/2
SLV 12	143750	0.53	0	-94	11.71	0	0	No, e>t/2

Verifica dei meccanismi locali di collasso con analisi cinematica lineare

forza di aggancio al piano = 0 quota mezzeria = 13.6 Wa = 0.03 Ta = 0.1146

Comb.	N top	N base	V orto	α0	M*	e*	a0*	aLim	Verifica
SLV 13	-28	586	-1	0	0	0	0	19.30799	No, Trazione
SLV 16	-35	394	-2	0	0	0	0	19.30799	No, Trazione
SLV 10	-30	149	1	0	0	0	0	16.84384	No, Trazione
SLV 15	-35	394	-2	0	0	0	0	19.30799	No, Trazione
SLV 14	-28	586	-1	0	0	0	0	19.30799	No, Trazione
SLV 9	-30	149	1	0	0	0	0	16.84384	No, Trazione
SLV 1	-59	-1304	2	0.023	21	0.892	0.37398	19.30799	No
SLV 2	-59	-1304	2	0.023	21	0.892	0.37398	19.30799	No
SLV 5	-39	-418	2	0.024	19.4	0.903	0.39293	16.84384	No
SLV 6	-39	-418	2	0.024	19.4	0.903	0.39293	16.84384	No

Tabella dei coefficienti di sicurezza minimi

Stato limite	Coeff.s.	Comb.	Verifica
PF_SLU	0	SLU 51	No
V_SLU	0	SLU 1	No
PF_SLV	0	SLV 16	No
V_SLV	0	SLV 1	No
PFFP_SLV	0	SLV 8	No
R_SLV	0	SLV 16	No

Maschio 238

Verifiche condotte secondo D.M. 17-01-18 (N.T.C.)

Dati geometrici

X ini.	Y ini.	X fin.	Y fin.	Quota i.	Quota.s	l	Sp.	h netta	h ini.	h fin.	a	a.s.,sx	a.s.,dx
-11.003	-3.309	-11.003	0	L6	L7	3.309	0.28	3.1	3.1	3.1			

Caratteristiche del materiale

(Circolare 7 21-01-19 C8.5.I) Muratura in mattoni pieni e malta di calce LC2_Corti

fb	fk	fvk0	fmedio	τ0	fv0	μ	ϕ	fv,lim	E	G	FC
600000			345000	9000	20000	0.58	0.77	32500	320000000	128000000	1.2

Verifica a pressoflessione nel piano secondo D.M. 17-01-18 NTC §7.8.2.2.1 in combinazioni non sismiche, γM = 3

Comb.	Quota	N	M	σ0	Mu	c.s.	Verifica
SLU 58	12.05	-11916	-1454.66	12861	16601.69	11.413	Si
SLU 58	14.15	-5286	2707.66	5705	8133.28	3.004	Si
SLU 30	12.05	-9995	-1151.52	10788	14346.18	12.459	Si
SLU 30	14.15	-4495	2392.45	4851	6993.73	2.923	Si
SLU 29	12.05	-10016	-1277.35	10811	14372.6	11.252	Si
SLU 29	14.15	-4553	2610.79	4914	7077.82	2.711	Si
SLU 37	12.05	-10531	-1606.05	11366	14992.27	9.335	Si
SLU 37	14.15	-4740	2634.83	5116	7349.64	2.789	Si
SLU 8	12.05	-9111	-1021.35	9834	13254.25	12.977	Si
SLU 8	14.15	-4117	2301.81	4444	6440.08	2.798	Si
SLU 16	12.05	-9626	-1350.05	10389	13894.35	10.292	Si
SLU 16	14.15	-4304	2325.85	4646	6715.49	2.887	Si
SLU 71	12.05	-12306	-1381.95	13283	17040.71	12.331	Si
SLU 71	14.15	-5534	2992.61	5973	8484.93	2.835	Si
SLU 79	12.05	-12821	-1710.66	13838	17608.7	10.294	Si
SLU 79	14.15	-5722	3016.65	6176	8748.69	2.9	Si
SLU 50	12.05	-11401	-1125.96	12305	16013.26	14.222	Si
SLU 50	14.15	-5099	2683.63	5503	7865.94	2.931	Si
SLU 27	12.05	-10301	-1277.89	11118	14716.91	11.517	Si
SLU 27	14.15	-4779	2514.23	5159	7406.77	2.946	Si

Verifica a pressoflessione nel piano secondo D.M. 17-01-18 NTC §7.8.2.2.1 in combinazioni sismiche, γM = 2

Comb.	Quota	N	M	σ0	Mu	c.s.	Verifica
SLV 13	12.05	-10287	-2981.65	11103	15473.38	5.19	Si
SLV 13	14.15	-5536	4032.78	5975	8710.85	2.16	Si
SLV 14	12.05	-10287	-2981.65	11103	15473.38	5.19	Si
SLV 14	14.15	-5536	4032.78	5975	8710.85	2.16	Si
SLV 9	12.05	-10970	-5560.99	11840	16390.29	2.947	Si
SLV 9	14.15	-6551	6260.15	7071	10211.97	1.631	Si
SLV 5	12.05	-10544	-5068.11	11381	15820.65	3.122	Si
SLV 5	14.15	-6020	5633.75	6497	9429.69	1.674	Si
SLV 10	12.05	-10970	-5560.99	11840	16390.29	2.947	Si
SLV 10	14.15	-6551	6260.15	7071	10211.97	1.631	Si
SLV 12	12.05	-7603	3451.48	8206	11734.34	3.4	Si
SLV 12	14.15	-1876	-2191.75	2025	3052.9	1.393	Si
SLV 11	12.05	-7603	3451.48	8206	11734.34	3.4	Si
SLV 11	14.15	-1876	-2191.75	2025	3052.9	1.393	Si
SLV 7	12.05	-7178	3944.36	7747	11122.87	2.82	Si
SLV 7	14.15	-1344	-2818.15	0	0	0	No, e>l/2
SLV 6	12.05	-10544	-5068.11	11381	15820.65	3.122	Si
SLV 6	14.15	-6020	5633.75	6497	9429.69	1.674	Si
SLV 8	12.05	-7178	3944.36	7747	11122.87	2.82	Si
SLV 8	14.15	-1344	-2818.15	0	0	0	No, e>l/2

Verifica a taglio nel piano secondo D.M. 17-01-18 (N.T.C.) §7.8.2.2.2 con rottura per scorrimento in combinazioni non sismiche, γM = 3

Comb.	Quota	N	V par	M	σ0	σN	l'	fvd	Vt scorr.	Vt fess.diag.	Vt,lim	c.s.	Verifica
SLU 71	12.05	-12306	-599	-1381.95		13283	3.309	7327	6788			11.32	Si
SLU 71	14.15	-5534	-364	2992.61		5973	3.309	6352	5885			16.15	Si
SLU 50	12.05	-11401	-588	-1125.96		12305	3.309	7196	6667			11.34	Si
SLU 50	14.15	-5099	-380	2683.63		5503	3.309	6289	5827			15.35	Si
SLU 79	12.05	-12821	-533	-1710.66		13838	3.309	7401	6857			12.87	Si
SLU 79	14.15	-5722	-293	3016.65		6176	3.309	6379	5910			20.14	Si
SLU 6	12.05	-9396	-483	-1021.9		10141	3.309	6908	6400			13.24	Si
SLU 6	14.15	-4344	-271	2205.25		4689	3.309	6181	5726			21.13	Si
SLU 27	12.05	-10301	-495	-1277.89		11118	3.309	7038	6521			13.18	Si
SLU 27	14.15	-4779	-256	2514.23		5159	3.309	6243	5785			22.61	Si
SLU 29	12.05	-10016	-558	-1277.35		10811	3.309	6997	6483			11.63	Si
SLU 29	14.15	-4553	-364	2610.79		5014	3.243	6224	5652			15.51	Si
SLU 8	12.05	-9111	-546	-1021.35		9834	3.309	6867	6362			11.65	Si
SLU 8	14.15	-4117	-379	2301.81		4474	3.2862	6152	5661			14.92	Si
SLU 48	12.05	-11686	-525	-1126.51		12613	3.309	7237	6705			12.77	Si
SLU 48	14.15	-5326	-271	2587.07		5748	3.309	6322	5857			21.61	Si
SLU 58	12.05	-11916	-522	-1454.66		12861	3.309	7270	6736			12.92	Si

Comb.	Quota	N	V par	M	σ0	σN	l'	fvd	Vt scorr.	Vt fess.diag.	Vt,lim	c.s.	Verifica
SLU 58	14.15	-5286	-309	2707.66		5705	3.309	6316	5852			18.96	Si
SLU 69	12.05	-12591	-537	-1382.5		13590	3.309	7368	6826			12.72	Si
SLU 69	14.15	-5761	-256	2896.05		6218	3.309	6385	5915			23.11	Si

Verifica a taglio nel piano secondo D.M. 17-01-18 (N.T.C.) §7.8.2.2.2 con rottura per scorrimento in combinazioni sismiche, γM = 2

Comb.	Quota	N	V par	M	σ0	σN	l'	fvd	Vt scorr.	Vt fess.diag.	Vt,lim	c.s.	Verifica
SLV 7	12.05	-7178	5660	3944.36		7747	3.309	9883	9157			1.62	Si
SLV 7	14.15	-1344	3585	-2818.15		0	0	8333	0			0	No, Vu<V
SLV 13	12.05	-10287	-2988	-2981.65		11103	3.309	10554	9778			3.27	Si
SLV 13	14.15	-5536	-1517	4032.78		7117	2.7779	9757	7589			5	Si
SLV 14	12.05	-10287	-2988	-2981.65		11103	3.309	10554	9778			3.27	Si
SLV 14	14.15	-5536	-1517	4032.78		7117	2.7779	9757	7589			5	Si
SLV 5	12.05	-10544	-5200	-5068.11		11381	3.309	10610	9830			1.89	Si
SLV 5	14.15	-6020	-3175	5633.75		9973	2.1557	10328	6234			1.96	Si
SLV 10	12.05	-10970	-5933	-5560.99		11840	3.309	10701	9915			1.67	Si
SLV 10	14.15	-6551	-3502	6260.15		11159	2.0968	10565	6203			1.77	Si
SLV 11	12.05	-7603	4926	3451.48		8206	3.309	9975	9242			1.88	Si
SLV 11	14.15	-1876	3258	-2191.75		4593	1.4591	9252	3780			1.16	Si
SLV 12	12.05	-7603	4926	3451.48		8206	3.309	9975	9242			1.88	Si
SLV 12	14.15	-1876	3258	-2191.75		4593	1.4591	9252	3780			1.16	Si
SLV 8	12.05	-7178	5660	3944.36		7747	3.309	9883	9157			1.62	Si
SLV 8	14.15	-1344	3585	-2818.15		0	0	8333	0			0	No, Vu<V
SLV 6	12.05	-10544	-5200	-5068.11		11381	3.309	10610	9830			1.89	Si
SLV 6	14.15	-6020	-3175	5633.75		9973	2.1557	10328	6234			1.96	Si
SLV 9	12.05	-10970	-5933	-5560.99		11840	3.309	10701	9915			1.67	Si
SLV 9	14.15	-6551	-3502	6260.15		11159	2.0968	10565	6203			1.77	Si

Verifica a pressoflessione fuori piano D.M. 17-01-18 (N.T.C.)

quota 13.6 Wa 0.05 denominatore 8 γM = 2

Comb.	fd	Sa	σ0	N	M	Mc	Coeff.s.	Verifica
SLV 7	143750	0.53	2879	-2667	369.04	364.62	0.99	No, M>Mu
SLV 8	143750	0.53	2879	-2667	369.04	364.62	0.99	No, M>Mu
SLV 12	143750	0.53	3433	-3181	369.04	432.83	1.17	Si
SLV 11	143750	0.53	3433	-3181	369.04	432.83	1.17	Si
SLV 3	143750	0.53	3832	-3550	369.04	481.47	1.3	Si
SLV 4	143750	0.53	3832	-3550	369.04	481.47	1.3	Si
SLV 1	143750	0.53	5203	-4821	369.04	646.21	1.75	Si
SLV 2	143750	0.53	5203	-4821	369.04	646.21	1.75	Si
SLV 16	143750	0.53	5680	-5263	369.04	702.55	1.9	Si
SLV 15	143750	0.53	5680	-5263	369.04	702.55	1.9	Si

Verifica dei meccanismi locali di collasso con analisi cinematica lineare

forza di aggancio al piano = 0 quota mezzeria = 13.6 Wa = 0.05 Ta = 0.0573

Comb.	N top	N base	V orto	α0	M*	e*	a0*	aLim	Verifica
SLV 1	-411	-8870	76	0.059	537.1	0.944	0.90492	9.07197	No
SLV 2	-411	-8870	76	0.059	537.1	0.944	0.90492	9.07197	No
SLV 3	-230	-7860	74	0.06	530.5	0.964	0.91196	9.07197	No
SLV 4	-230	-7860	74	0.06	530.5	0.964	0.91196	9.07197	No
SLV 15	-534	-9277	-75	0.059	542.9	0.934	0.91225	9.07197	No
SLV 16	-534	-9277	-75	0.059	542.9	0.934	0.91225	9.07197	No
SLV 14	-715	-10287	-72	0.059	552.9	0.922	0.92349	9.07197	No
SLV 13	-715	-10287	-72	0.059	552.9	0.922	0.92349	9.07197	No
SLV 6	-728	-10544	27	0.072	553.8	0.921	1.14161	8.24559	No
SLV 5	-728	-10544	27	0.072	553.8	0.921	1.14161	8.24559	No

Tabella dei coefficienti di sicurezza minimi

Stato limite	Coeff.s.	Comb.	Verifica
PF_SLU	2.711	SLU 29	Si
V_SLU	11.325	SLU 71	Si
PF_SLV	0	SLV 7	No
V_SLV	0	SLV 7	No
PFFP_SLV	0.988	SLV 7	No
R_SLV	0.1	SLV 1	No

Maschio 239

Verifiche condotte secondo D.M. 17-01-18 (N.T.C.)

Dati geometrici

X ini.	Y ini.	X fin.	Y fin.	Quota i.	Quota.s	l	Sp.	h netta	h ini.	h fin.	a	a.s.,sx	a.s.,dx
-9.72	1.141	-9.72	1.426	L6	L7	0.285	0.14	3.1	3.1	3.1			

Caratteristiche del materiale

(Circolare 7 21-01-19 C8.5.I) Muratura in mattoni pieni e malta di calce LC2_Corti

fb	fk	fvk0	fmedio	τ0	fv0	μ	ϕ	fv,lim	E	G	FC
600000			345000	9000	20000	0.58	0.77	32500	320000000	128000000	1.2

Verifica a pressoflessione nel piano secondo D.M. 17-01-18 NTC §7.8.2.2.1 in combinazioni non sismiche, γM = 3

Comb.	Quota	N	M	σ0	Mu	c.s.	Verifica
SLU 56	12.05	-2172	121.28	54511	102.26	0.843	No, M>Mu
SLU 56	14.15	453	-103.17	0	0	0	No, Trazione
SLU 55	12.05	-1955	110.27	49052	110.66	1.004	Si
SLU 55	14.15	445	-93.57	0	0	0	No, Trazione
SLU 61	12.05	-1838	105.9	46133	113.45	1.071	Si
SLU 61	14.15	454	-88.15	0	0	0	No, Trazione

Comb.	Quota	N	M	σ0	Mu	c.s.	Verifica
SLU 58	12.05	-2137	120.67	53630	103.9	0.861	No, M>Mu
SLU 58	14.15	479	-102.93	0	0	0	No, Trazione
SLU 53	12.05	-2001	111.64	50208	109.23	0.978	No, M>Mu
SLU 53	14.15	419	-94.03	0	0	0	No, Trazione
SLU 54	12.05	-1994	111.18	50043	109.45	0.984	No, M>Mu
SLU 54	14.15	419	-93.89	0	0	0	No, Trazione
SLU 59	12.05	-2130	120.22	53465	104.19	0.867	No, M>Mu
SLU 59	14.15	480	-102.8	0	0	0	No, Trazione
SLU 1	12.05	-1334	72.37	33482	111.83	1.545	Si
SLU 1	14.15	259	-61.12	0	0	0	No, Trazione
SLU 57	12.05	-2166	120.83	54346	102.58	0.849	No, M>Mu
SLU 57	14.15	454	-103.03	0	0	0	No, Trazione
SLU 60	12.05	-1845	106.35	46297	113.33	1.066	Si
SLU 60	14.15	453	-88.28	0	0	0	No, Trazione

Verifica a pressoflessione nel piano secondo D.M. 17-01-18 NTC §7.8.2.2.1 in combinazioni sismiche, γM = 2

Comb.	Quota	N	M	σ0	Mu	c.s.	Verifica
SLV 10	12.05	788	-182.41	0	0	0	No, Trazione
SLV 10	14.15	-1032	7.99	25899	115.74	14.486	Si
SLV 8	12.05	-3622	340.98	90901	131.99	0.387	No, M>Mu
SLV 8	14.15	1649	-140.52	0	0	0	No, Trazione
SLV 4	12.05	-2478	206.67	62189	173.17	0.838	No, M>Mu
SLV 4	14.15	1324	-139.57	0	0	0	No, Trazione
SLV 7	12.05	-3622	340.98	90901	131.99	0.387	No, M>Mu
SLV 7	14.15	1649	-140.52	0	0	0	No, Trazione
SLV 2	12.05	-1234	59.32	30967	131.1	2.21	Si
SLV 2	14.15	641	-105.11	0	0	0	No, Trazione
SLV 9	12.05	788	-182.41	0	0	0	No, Trazione
SLV 9	14.15	-1032	7.99	25899	115.74	14.486	Si
SLV 6	12.05	525	-150.19	0	0	0	No, Trazione
SLV 6	14.15	-628	-25.66	15750	77.81	3.032	Si
SLV 5	12.05	525	-150.19	0	0	0	No, Trazione
SLV 5	14.15	-628	-25.66	15750	77.81	3.032	Si
SLV 3	12.05	-2478	206.67	62189	173.17	0.838	No, M>Mu
SLV 3	14.15	1324	-139.57	0	0	0	No, Trazione
SLV 1	12.05	-1234	59.32	30967	131.1	2.21	Si
SLV 1	14.15	641	-105.11	0	0	0	No, Trazione

Verifica a taglio nel piano secondo D.M. 17-01-18 (N.T.C.) §7.8.2.2.2 con rottura per scorrimento in combinazioni non sismiche, γM = 3

Comb.	Quota	N	V par	M	σ0	σN	I'	fvd	Vt scorr.	Vt fess.diag.	Vt,lim	c.s.	Verifica
SLU 55	12.05	-1955	272	110.27		54179	0.2577	10833	391			1.44	Si
SLU 55	14.15	445	233	-93.57		0	0	5556	0			0	No, Vu<V
SLU 59	12.05	-2130	297	120.22		59062	0.2577	10833	391			1.31	Si
SLU 59	14.15	480	256	-102.8		0	0	5556	0			0	No, Vu<V
SLU 54	12.05	-1994	274	111.18		54852	0.2597	10833	394			1.44	Si
SLU 54	14.15	419	234	-93.89		0	0	5556	0			0	No, Vu<V
SLU 53	12.05	-2001	276	111.64		55060	0.2595	10833	394			1.43	Si
SLU 53	14.15	419	234	-94.03		0	0	5556	0			0	No, Vu<V
SLU 1	12.05	-1334	178	72.37		36069	0.2642	10365	383			2.15	Si
SLU 1	14.15	259	152	-61.12		0	0	5556	0			0	No, Vu<V
SLU 57	12.05	-2166	299	120.83		59597	0.2596	10833	394			1.32	Si
SLU 57	14.15	454	256	-103.03		0	0	5556	0			0	No, Vu<V
SLU 60	12.05	-1845	262	106.35		51881	0.254	10833	385			1.47	Si
SLU 60	14.15	453	220	-88.28		0	0	5556	0			0	No, Vu<V
SLU 58	12.05	-2137	299	120.67		59271	0.2575	10833	391			1.31	Si
SLU 58	14.15	479	256	-102.93		0	0	5556	0			0	No, Vu<V
SLU 56	12.05	-2172	300	121.28		59804	0.2594	10833	393			1.31	Si
SLU 56	14.15	453	256	-103.17		0	0	5556	0			0	No, Vu<V
SLU 61	12.05	-1838	260	105.9		51672	0.2541	10833	385			1.48	Si
SLU 61	14.15	454	220	-88.15		0	0	5556	0			0	No, Vu<V

Verifica a taglio nel piano secondo D.M. 17-01-18 (N.T.C.) §7.8.2.2.2 con rottura per scorrimento in combinazioni sismiche, γM = 2

Comb.	Quota	N	V par	M	σ0	σN	I'	fvd	Vt scorr.	Vt fess.diag.	Vt,lim	c.s.	Verifica
SLV 10	12.05	788	-713	-182.41		0	0	8333	0			0	No, Vu<V
SLV 10	14.15	-1032	-83	7.99		25899	0.2846	13513	538			6.5	Si
SLV 8	12.05	-3622	1103	340.98		179012	0.1445	16250	329			0.3	No, Vu<V
SLV 8	14.15	1649	413	-140.52		0	0	8333	0			0	No, Vu<V
SLV 4	12.05	-2478	614	206.67		100148	0.1767	16250	402			0.66	No, Vu<V
SLV 4	14.15	1324	368	-139.57		0	0	8333	0			0	No, Vu<V
SLV 2	12.05	-1234	98	59.32		31175	0.2827	14568	577			5.9	Si
SLV 2	14.15	641	245	-105.11		0	0	8333	0			0	No, Vu<V
SLV 1	12.05	-1234	98	59.32		31175	0.2827	14568	577			5.9	Si
SLV 1	14.15	641	245	-105.11		0	0	8333	0			0	No, Vu<V
SLV 6	12.05	525	-617	-150.19		0	0	8333	0			0	No, Vu<V
SLV 6	14.15	-628	2	-25.66		15750	0.2846	11483	458			189.26	Si
SLV 3	12.05	-2478	614	206.67		100148	0.1767	16250	402			0.66	No, Vu<V
SLV 3	14.15	1324	368	-139.57		0	0	8333	0			0	No, Vu<V
SLV 7	12.05	-3622	1103	340.98		179012	0.1445	16250	329			0.3	No, Vu<V
SLV 7	14.15	1649	413	-140.52		0	0	8333	0			0	No, Vu<V
SLV 5	12.05	525	-617	-150.19		0	0	8333	0			0	No, Vu<V
SLV 5	14.15	-628	2	-25.66		15750	0.2846	11483	458			189.26	Si
SLV 9	12.05	788	-713	-182.41		0	0	8333	0			0	No, Vu<V
SLV 9	14.15	-1032	-83	7.99		25899	0.2846	13513	538			6.5	Si

Verifica a pressoflessione fuori piano D.M. 17-01-18 (N.T.C.)

quota 13.6 Wa 0.03 denominatore 8 γM = 2

Comb.	fd	Sa	σ0	N	M	Mc	Coeff.s.	Verifica
SLV 2	143750	0.53	0	108	16.59	0	0	No, Trazione
SLV 7	143750	0.53	0	1111	16.59	0	0	No, Trazione

Comb.	fd	Sa	σ0	N	M	Mc	Coeff.s.	Verifica
SLV 11	143750	0.53	0	840	16.59	0	0	No, Trazione
SLV 3	143750	0.53	0	717	16.59	0	0	No, Trazione
SLV 16	143750	0.53	0	-187	16.59	0	0	No, e>t/2
SLV 12	143750	0.53	0	840	16.59	0	0	No, Trazione
SLV 15	143750	0.53	0	-187	16.59	0	0	No, e>t/2
SLV 1	143750	0.53	0	108	16.59	0	0	No, Trazione
SLV 4	143750	0.53	0	717	16.59	0	0	No, Trazione
SLV 8	143750	0.53	0	1111	16.59	0	0	No, Trazione

Verifica dei meccanismi locali di collasso con analisi cinematica lineare

forza di aggancio al piano = 0 quota mezzeria = 13.6 Wa = 0.03 Ta = 0.1146

Comb.	N top	N base	V orto	α0	M*	e*	a0*	aLim	Verifica
SLV 6	128	525	1	0	0	0	0	16.84384	No, Trazione
SLV 5	128	525	1	0	0	0	0	16.84384	No, Trazione
SLV 9	146	788	0	0	0	0	0	16.84384	No, Trazione
SLV 10	146	788	0	0	0	0	0	16.84384	No, Trazione
SLV 4	-236	-2478	1	0.026	42.1	0.902	0.42149	19.30799	No
SLV 3	-236	-2478	1	0.026	42.1	0.902	0.42149	19.30799	No
SLV 16	-176	-1600	-1	0.028	36.3	0.894	0.44766	19.30799	No
SLV 15	-176	-1600	-1	0.028	36.3	0.894	0.44766	19.30799	No
SLV 1	-77	-1234	1	0.029	27.3	0.892	0.46881	19.30799	No
SLV 2	-77	-1234	1	0.029	27.3	0.892	0.46881	19.30799	No

Tabella dei coefficienti di sicurezza minimi

Stato limite	Coeff.s.	Comb.	Verifica
PF_SLU	0	SLU 84	No
V_SLU	0	SLU 1	No
PF_SLV	0	SLV 12	No
V_SLV	0	SLV 1	No
PFFP_SLV	0	SLV 12	No
R_SLV	0	SLV 10	No

Maschio 240

Verifiche condotte secondo D.M. 17-01-18 (N.T.C.)

Dati geometrici

X ini.	Y ini.	X fin.	Y fin.	Quota i.	Quota.s	l	Sp.	h netta	h ini.	h fin.	a	a.s.,sx	a.s.,dx
-9.72	2.226	-9.72	6.64	L6	L7	4.414	0.14	3.1	3.1	3.1			

Caratteristiche del materiale

(Circolare 7 21-01-19 C8.5.I) Muratura in mattoni pieni e malta di calce LC2_Corti

fb	fk	fvk0	fmedio	τ0	fv0	μ	ϕ	fv,lim	E	G	FC
600000			345000	9000	20000	0.58	0.77	32500	320000000	128000000	1.2

Verifica a pressoflessione nel piano secondo D.M. 17-01-18 NTC §7.8.2.2.1 in combinazioni non sismiche, γM = 3

Comb.	Quota	N	M	σ0	Mu	c.s.	Verifica
SLU 18	12.05	-6497	553.3	10513	12488.91	22.572	Si
SLU 18	14.15	-2965	-2165.15	4797	6158.02	2.844	Si
SLU 60	12.05	-7945	666.52	12857	14768.51	22.158	Si
SLU 60	14.15	-3672	-2638.05	5942	7513.4	2.848	Si
SLU 83	12.05	-8971	1056.16	14517	16272.11	15.407	Si
SLU 83	14.15	-4174	-2974.88	6754	8448.38	2.84	Si
SLU 81	12.05	-8680	761.28	14046	15855.1	20.827	Si
SLU 81	14.15	-3970	-2879.42	6424	8071.6	2.803	Si
SLU 41	12.05	-7523	942.94	12173	14122.83	14.977	Si
SLU 41	14.15	-3467	-2501.98	5609	7124.13	2.847	Si
SLU 40	12.05	-7229	652.24	11698	13664.19	20.95	Si
SLU 40	14.15	-3259	-2399.37	5274	6727.44	2.804	Si
SLU 19	12.05	-6494	557.47	10508	12484.05	22.394	Si
SLU 19	14.15	-2961	-2158	4791	6150.64	2.85	Si
SLU 39	12.05	-7232	648.07	11703	13668.86	21.092	Si
SLU 39	14.15	-3263	-2406.51	5280	6734.72	2.799	Si
SLU 84	12.05	-8968	1060.33	14512	16267.89	15.342	Si
SLU 84	14.15	-4170	-2967.73	6748	8441.41	2.844	Si
SLU 82	12.05	-8678	765.45	14042	15850.81	20.708	Si
SLU 82	14.15	-3966	-2872.27	6418	8064.56	2.808	Si

Verifica a pressoflessione nel piano secondo D.M. 17-01-18 NTC §7.8.2.2.1 in combinazioni sismiche, γM = 2

Comb.	Quota	N	M	σ0	Mu	c.s.	Verifica
SLV 3	12.05	-5405	2302.25	8745	11074.72	4.81	Si
SLV 3	14.15	-3543	-4184.66	5732	7451.88	1.781	Si
SLV 11	12.05	-5700	2988.07	9224	11631.57	3.893	Si
SLV 11	14.15	-3428	-5840.03	5547	7222.19	1.237	Si
SLV 4	12.05	-5405	2302.25	8745	11074.72	4.81	Si
SLV 4	14.15	-3543	-4184.66	5732	7451.88	1.781	Si
SLV 16	12.05	-6388	398.71	10338	12907.14	32.372	Si
SLV 16	14.15	-2573	-2269.01	4164	5485.95	2.418	Si
SLV 8	12.05	-5405	3559.13	8746	11075.91	3.112	Si
SLV 8	14.15	-3719	-6414.72	6017	7803.21	1.216	Si
SLV 10	12.05	-6682	-2506.56	10813	13443.71	5.363	Si
SLV 10	14.15	-1955	2447.24	3164	4204.08	1.718	Si
SLV 15	12.05	-6388	398.71	10338	12907.14	32.372	Si
SLV 15	14.15	-2573	-2269.01	4164	5485.95	2.418	Si
SLV 7	12.05	-5405	3559.13	8746	11075.91	3.112	Si
SLV 7	14.15	-3719	-6414.72	6017	7803.21	1.216	Si

Comb.	Quota	N	M	σ0	Mu	c.s.	Verifica
SLV 12	12.05	-5700	2988.07	9224	11631.57	3.893	Si
SLV 12	14.15	-3428	-5840.03	5547	7222.19	1.237	Si
SLV 9	12.05	-6682	-2506.56	10813	13443.71	5.363	Si
SLV 9	14.15	-1955	2447.24	3164	4204.08	1.718	Si

Verifica a taglio nel piano secondo D.M. 17-01-18 (N.T.C.) §7.8.2.2.2 con rottura per scorrimento in combinazioni non sismiche, γM = 3

Comb.	Quota	N	V par	M	σ0	σN	l'	fvd	Vt scorr.	Vt fess.diag.	Vt,lim	c.s.	Verifica
SLU 58	12.05	-8279	-214	1235.98		13396	4.4142	7342	4537			21.24	Si
SLU 58	14.15	-4000	-213	-2735.08		6472	4.4142	6418	3967			18.6	Si
SLU 79	12.05	-9014	-225	1330.75		14586	4.4142	7500	4635			20.64	Si
SLU 79	14.15	-4298	-224	-2976.45		6954	4.4142	6483	4006			17.86	Si
SLU 59	12.05	-8276	-211	1240.15		13391	4.4142	7341	4537			21.49	Si
SLU 59	14.15	-3996	-211	-2727.93		6466	4.4142	6418	3966			18.81	Si
SLU 78	12.05	-9308	-218	1255.85		15062	4.4142	7564	4674			21.41	Si
SLU 78	14.15	-4461	-218	-3064.19		7219	4.4142	6518	4028			18.47	Si
SLU 77	12.05	-9311	-221	1251.68		15067	4.4142	7565	4675			21.18	Si
SLU 77	14.15	-4465	-221	-3071.34		7225	4.4142	6519	4029			18.27	Si
SLU 69	12.05	-8731	-215	1204.35		14128	4.4142	7439	4597			21.39	Si
SLU 69	14.15	-4279	-214	-2852.27		6923	4.4142	6479	4004			18.67	Si
SLU 70	12.05	-8728	-212	1208.52		14123	4.4142	7439	4597			21.64	Si
SLU 70	14.15	-4275	-212	-2845.12		6917	4.4142	6478	4003			18.88	Si
SLU 71	12.05	-8433	-219	1283.42		13647	4.4142	7375	4558			20.84	Si
SLU 71	14.15	-4111	-218	-2757.38		6653	4.4142	6443	3981			18.24	Si
SLU 80	12.05	-9011	-222	1334.91		14581	4.4142	7500	4635			20.87	Si
SLU 80	14.15	-4294	-222	-2969.3		6948	4.4142	6482	4006			18.05	Si
SLU 72	12.05	-8430	-216	1287.58		13642	4.4142	7374	4557			21.07	Si
SLU 72	14.15	-4108	-216	-2750.23		6647	4.4142	6442	3981			18.44	Si

Verifica a taglio nel piano secondo D.M. 17-01-18 (N.T.C.) §7.8.2.2.2 con rottura per scorrimento in combinazioni sismiche, γM = 2

Comb.	Quota	N	V par	M	σ0	σN	l'	fvd	Vt scorr.	Vt fess.diag.	Vt,lim	c.s.	Verifica
SLV 2	12.05	-5699	-2014	653.86		9222	4.4142	10178	6290			3.12	Si
SLV 2	14.15	-3101	-834	-1698.48		5018	4.4142	9337	5770			6.92	Si
SLV 7	12.05	-5405	4268	3559.13		8746	4.4142	10083	6231			1.46	Si
SLV 7	14.15	-3719	2866	-6414.72		18366	1.4462	12007	2431			0.85	No, Vu<V
SLV 10	12.05	-6682	-4506	-2506.56		10813	4.4142	10496	6486			1.44	Si
SLV 10	14.15	-1955	-3104	2447.24		4872	2.8668	9308	3736			1.2	Si
SLV 11	12.05	-5700	4587	2988.07		9224	4.4142	10178	6290			1.37	Si
SLV 11	14.15	-3428	2767	-5840.03		16213	1.5102	11576	2447			0.88	No, Vu<V
SLV 5	12.05	-6387	-4825	-1935.5		10336	4.4142	10400	6427			1.33	Si
SLV 5	14.15	-2246	-3005	1872.54		3894	4.1204	9112	5256			1.75	Si
SLV 9	12.05	-6682	-4506	-2506.56		10813	4.4142	10496	6486			1.44	Si
SLV 9	14.15	-1955	-3104	2447.24		4872	2.8668	9308	3736			1.2	Si
SLV 8	12.05	-5405	4268	3559.13		8746	4.4142	10083	6231			1.46	Si
SLV 8	14.15	-3719	2866	-6414.72		18366	1.4462	12007	2431			0.85	No, Vu<V
SLV 6	12.05	-6387	-4825	-1935.5		10336	4.4142	10400	6427			1.33	Si
SLV 6	14.15	-2246	-3005	1872.54		3894	4.1204	9112	5256			1.75	Si
SLV 12	12.05	-5700	4587	2988.07		9224	4.4142	10178	6290			1.37	Si
SLV 12	14.15	-3428	2767	-5840.03		16213	1.5102	11576	2447			0.88	No, Vu<V
SLV 1	12.05	-5699	-2014	653.86		9222	4.4142	10178	6290			3.12	Si
SLV 1	14.15	-3101	-834	-1698.48		5018	4.4142	9337	5770			6.92	Si

Verifica a pressoflessione fuori piano D.M. 17-01-18 (N.T.C.)

quota 13.6 Wa 0.03 denominatore 8 γM = 2

Comb.	fd	Sa	σ0	N	M	Mc	Coeff.s.	Verifica
SLV 9	143750	0.53	0	-2820	257.34	0	0	No, e>t/2
SLV 16	143750	0.53	0	-3274	257.34	0	0	No, e>t/2
SLV 15	143750	0.53	0	-3274	257.34	0	0	No, e>t/2
SLV 10	143750	0.53	0	-2820	257.34	0	0	No, e>t/2
SLV 14	143750	0.53	0	-2934	257.34	0	0	No, e>t/2
SLV 13	143750	0.53	0	-2934	257.34	0	0	No, e>t/2
SLV 6	143750	0.53	0	-3064	257.34	0	0	No, e>t/2
SLV 5	143750	0.53	0	-3064	257.34	0	0	No, e>t/2
SLV 1	143750	0.53	6062	-3746	257.34	249.23	0.97	No, M>Mu
SLV 2	143750	0.53	6062	-3746	257.34	249.23	0.97	No, M>Mu

Verifica dei meccanismi locali di collasso con analisi cinematica lineare

forza di aggancio al piano = 0 quota mezzeria = 13.6 Wa = 0.03 Ta = 0.1146

Comb.	N top	N base	V orto	α0	M*	e*	a0*	aLim	Verifica
SLV 12	212	-5700	-10	0	0	0	0	16.84384	No, Trazione
SLV 7	438	-5405	-15	0	0	0	0	16.84384	No, Trazione
SLV 2	70	-5699	-6	0	0	0	0	19.30799	No, Trazione
SLV 4	362	-5405	-13	0	0	0	0	19.30799	No, Trazione
SLV 3	362	-5405	-13	0	0	0	0	19.30799	No, Trazione
SLV 8	438	-5405	-15	0	0	0	0	16.84384	No, Trazione
SLV 1	70	-5699	-6	0	0	0	0	19.30799	No, Trazione
SLV 11	212	-5700	-10	0	0	0	0	16.84384	No, Trazione
SLV 13	-683	-6683	13	0.034	382.3	0.908	0.53639	19.30799	No
SLV 14	-683	-6683	13	0.034	382.3	0.908	0.53639	19.30799	No

Tabella dei coefficienti di sicurezza minimi

Stato limite	Coeff.s.	Comb.	Verifica
PF_SLU	2.799	SLU 39	Si
V_SLU	17.857	SLU 79	Si
PF_SLV	1.216	SLV 7	Si
V_SLV	0.848	SLV 7	No
PFFP_SLV	0	SLV 5	No
R_SLV	0	SLV 12	No

Maschio 241

Verifiche condotte secondo D.M. 17-01-18 (N.T.C.)

Dati geometrici

X ini.	Y ini.	X fin.	Y fin.	Quota i.	Quota.s	l	Sp.	h netta	h ini.	h fin.	a	a.s.,sx	a.s.,dx
-9.448	-3.169	-11.003	-3.169	L6	L7	1.555	0.28	3.1	3.1	3.1			

Caratteristiche del materiale

(Circolare 7 21-01-19 C8.5.I) Muratura in mattoni pieni e malta di calce LC2_Corti

fb	fk	fvk0	fmedio	τ0	fv0	μ	ϕ	fv,lim	E	G	FC
600000			345000	9000	20000	0.58	0.77	32500	320000000	128000000	1.2

Verifica a pressoflessione nel piano secondo D.M. 17-01-18 NTC §7.8.2.2.1 in combinazioni non sismiche, γM = 3

Comb.	Quota	N	M	σ0	Mu	c.s.	Verifica
SLU 18	12.05	-1884	1102.64	4327	1386.9	1.258	Si
SLU 18	14.15	-2236	-884.17	5135	1628.44	1.842	Si
SLU 19	12.05	-1855	1098.64	4261	1366.83	1.244	Si
SLU 19	14.15	-2224	-863.2	5107	1620.29	1.877	Si
SLU 81	12.05	-2469	1492.58	5670	1785.63	1.196	Si
SLU 81	14.15	-2988	-1185.94	6864	2127.48	1.794	Si
SLU 34	12.05	-1913	1193.42	4394	1407.12	1.179	Si
SLU 34	14.15	-2328	-868.58	5348	1691.26	1.947	Si
SLU 39	12.05	-1651	1337.5	0	0	0	No, e>l/2
SLU 39	14.15	-2401	-1020.54	5515	1740.18	1.705	Si
SLU 42	12.05	-1760	1291.28	4041	1300.07	1.007	Si
SLU 42	14.15	-2363	-935.65	5427	1714.55	1.832	Si
SLU 31	12.05	-1775	1235.63	4078	1311.12	1.061	Si
SLU 31	14.15	-2354	-932.49	5408	1708.85	1.833	Si
SLU 82	12.05	-2440	1488.57	5604	1766.31	1.187	Si
SLU 82	14.15	-2976	-1164.97	6836	2119.72	1.82	Si
SLU 40	12.05	-1622	1333.49	0	0	0	No, e>l/2
SLU 40	14.15	-2389	-999.57	5487	1732.11	1.733	Si
SLU 41	12.05	-1788	1295.29	4108	1320.26	1.019	Si
SLU 41	14.15	-2375	-956.62	5455	1722.64	1.801	Si

Verifica a pressoflessione nel piano secondo D.M. 17-01-18 NTC §7.8.2.2.1 in combinazioni sismiche, γM = 2

Comb.	Quota	N	M	σ0	Mu	c.s.	Verifica
SLV 16	12.05	-3392	-791.2	7791	2469.04	3.121	Si
SLV 16	14.15	-440	1080.75	0	0	0	No, e>l/2
SLV 3	12.05	-1223	1941.11	0	0	0	No, e>l/2
SLV 3	14.15	-3306	-1948.24	7593	2410.43	1.237	Si
SLV 1	12.05	-1164	2623.01	0	0	0	No, e>l/2
SLV 1	14.15	-3984	-2643.83	9152	2865.63	1.084	Si
SLV 4	12.05	-1223	1941.11	0	0	0	No, e>l/2
SLV 4	14.15	-3306	-1948.24	7593	2410.43	1.237	Si
SLV 2	12.05	-1164	2623.01	0	0	0	No, e>l/2
SLV 2	14.15	-3984	-2643.83	9152	2865.63	1.084	Si
SLV 12	12.05	-2702	-630.43	6206	1993.82	3.163	Si
SLV 12	14.15	-651	832.12	0	0	0	No, e>l/2
SLV 15	12.05	-3392	-791.2	7791	2469.04	3.121	Si
SLV 15	14.15	-440	1080.75	0	0	0	No, e>l/2
SLV 5	12.05	-1855	2462.24	0	0	0	No, e>l/2
SLV 5	14.15	-3773	-2395.2	8666	2725.11	1.138	Si
SLV 11	12.05	-2702	-630.43	6206	1993.82	3.163	Si
SLV 11	14.15	-651	832.12	0	0	0	No, e>l/2
SLV 6	12.05	-1855	2462.24	0	0	0	No, e>l/2
SLV 6	14.15	-3773	-2395.2	8666	2725.11	1.138	Si

Verifica a taglio nel piano secondo D.M. 17-01-18 (N.T.C.) §7.8.2.2.2 con rottura per scorrimento in combinazioni non sismiche, γM = 3

Comb.	Quota	N	V par	M	σ0	σN	l'	fvd	Vt scorr.	Vt fess.diag.	Vt,lim	c.s.	Verifica
SLU 82	12.05	-2440	2281	1488.57		17359	0.502	7870	1106			0.49	No, Vu<V
SLU 82	14.15	-2976	2267	-1164.97		9179	1.1581	6779	2198			0.97	No, Vu<V
SLU 84	12.05	-2578	2170	1446.36		14185	0.649	7447	1353			0.62	No, Vu<V
SLU 84	14.15	-2950	2156	-1101.06		8688	1.2127	6714	2280			1.06	Si
SLU 39	12.05	-1651	2033	1337.5		0	0	5556	0			0	No, Vu<V
SLU 39	14.15	-2401	2024	-1020.54		8111	1.0571	6637	1965			0.97	No, Vu<V
SLU 40	12.05	-1622	2030	1333.49		0	0	5556	0			0	No, Vu<V
SLU 40	14.15	-2389	2017	-999.57		7921	1.0771	6612	1994			0.99	No, Vu<V
SLU 83	12.05	-2606	2172	1450.37		14041	0.663	7428	1379			0.63	No, Vu<V
SLU 83	14.15	-2962	2163	-1122.03		8846	1.196	6735	2255			1.04	Si
SLU 34	12.05	-1913	1773	1193.42		14824	0.4609	7532	972			0.55	No, Vu<V
SLU 34	14.15	-2328	1757	-868.58		6854	1.2132	6469	2198			1.25	Si
SLU 81	12.05	-2469	2283	1492.58		17004	0.5185	7823	1136			0.5	No, Vu<V
SLU 81	14.15	-2988	2274	-1185.94		9347	1.1418	6802	2175			0.96	No, Vu<V
SLU 41	12.05	-1788	1922	1295.29		40044	0.1595	10833	484			0.25	No, Vu<V
SLU 41	14.15	-2375	1913	-956.62		7547	1.1239	6562	2065			1.08	Si
SLU 31	12.05	-1775	1883	1235.63		25952	0.2443	9016	617			0.33	No, Vu<V
SLU 31	14.15	-2354	1869	-932.49		7349	1.1441	6535	2094			1.12	Si
SLU 42	12.05	-1760	1919	1291.28		48079	0.1307	10833	396			0.21	No, Vu<V
SLU 42	14.15	-2363	1906	-935.65		7374	1.1443	6539	2095			1.1	Si

Verifica a taglio nel piano secondo D.M. 17-01-18 (N.T.C.) §7.8.2.2.2 con rottura per scorrimento in combinazioni sismiche, γM = 2

Comb.	Quota	N	V par	M	σ0	σN	l'	fvd	Vt scorr.	Vt fess.diag.	Vt,lim	c.s.	Verifica
SLV 11	12.05	-2702	-966	-630.43		6206	1.5549	9574	4168			4.32	Si
SLV 11	14.15	-651	-1311	832.12		0	0	8333	0			0	No, Vu<V
SLV 3	12.05	-1223	3910	1941.11		0	0	8333	0			0	No, Vu<V
SLV 3	14.15	-3306	2689	-1948.24		20920	0.5644	12517	1978			0.74	No, Vu<V
SLV 4	12.05	-1223	3910	1941.11		0	0	8333	0			0	No, Vu<V

Comb.	Quota	N	V par	M	σ0	σN	l'	fvd	Vt scorr.	Vt fess.diag.	Vt,lim	c.s.	Verifica
SLV 4	14.15	-3306	2689	-1948.24		20920	0.5644	12517	1978			0.74	No, Vu<V
SLV 12	12.05	-2702	-966	-630.43		6206	1.5549	9574	4168			4.32	Si
SLV 12	14.15	-651	-1311	832.12		0	0	8333	0			0	No, Vu<V
SLV 5	12.05	-1855	3781	2462.24		0	0	8333	0			0	No, Vu<V
SLV 5	14.15	-3773	4117	-2395.2		31501	0.4277	14633	1753			0.43	No, Vu<V
SLV 2	12.05	-1164	4803	2623.01		0	0	8333	0			0	No, Vu<V
SLV 2	14.15	-3984	3971	-2643.83		41645	0.3417	16250	1555			0.39	No, Vu<V
SLV 1	12.05	-1164	4803	2623.01		0	0	8333	0			0	No, Vu<V
SLV 1	14.15	-3984	3971	-2643.83		41645	0.3417	16250	1555			0.39	No, Vu<V
SLV 15	12.05	-3392	-1988	-791.2		7791	1.5549	9892	4307			2.17	Si
SLV 15	14.15	-440	-1164	1080.75		0	0	8333	0			0	No, Vu<V
SLV 16	12.05	-3392	-1988	-791.2		7791	1.5549	9892	4307			2.17	Si
SLV 16	14.15	-440	-1164	1080.75		0	0	8333	0			0	No, Vu<V
SLV 6	12.05	-1855	3781	2462.24		0	0	8333	0			0	No, Vu<V
SLV 6	14.15	-3773	4117	-2395.2		31501	0.4277	14633	1753			0.43	No, Vu<V

Verifica a pressoflessione fuori piano D.M. 17-01-18 (N.T.C.)

quota 13.6 Wa 0.05 denominatore 8 γM = 2

Comb.	fd	Sa	σ0	N	M	Mc	Coeff.s.	Verifica
SLV 16	143750	0.53	0	-972	169.47	0	0	No, e>t/2
SLV 15	143750	0.53	0	-972	169.47	0	0	No, e>t/2
SLV 11	143750	0.53	2867	-1248	169.47	170.66	1.01	Si
SLV 12	143750	0.53	2867	-1248	169.47	170.66	1.01	Si
SLV 14	143750	0.53	3425	-1491	169.47	202.9	1.2	Si
SLV 13	143750	0.53	3425	-1491	169.47	202.9	1.2	Si
SLV 8	143750	0.53	4605	-2005	169.47	270.12	1.59	Si
SLV 7	143750	0.53	4605	-2005	169.47	270.12	1.59	Si
SLV 9	143750	0.53	6845	-2980	169.47	393.83	2.32	Si
SLV 10	143750	0.53	6845	-2980	169.47	393.83	2.32	Si

Verifica dei meccanismi locali di collasso con analisi cinematica lineare

forza di aggancio al piano = 0 quota mezzeria = 13.6 Wa = 0.05 Ta = 0.0573

Comb.	N top	N base	V orto	α0	M*	e*	a0*	aLim	Verifica
SLV 4	-541	-1223	22	0.064	273.6	0.904	1.02835	9.07197	No
SLV 3	-541	-1223	22	0.064	273.6	0.904	1.02835	9.07197	No
SLV 8	-726	-2051	31	0.058	288	0.895	0.93521	8.24559	No
SLV 7	-726	-2051	31	0.058	288	0.895	0.93521	8.24559	No
SLV 14	-491	-3333	-17	0.067	270	0.907	1.08057	9.07197	No
SLV 13	-491	-3333	-17	0.067	270	0.907	1.08057	9.07197	No
SLV 11	-752	-2702	24	0.061	290	0.894	0.9929	8.24559	No
SLV 12	-752	-2702	24	0.061	290	0.894	0.9929	8.24559	No
SLV 9	-306	-2505	-26	0.064	258.1	0.926	1.0104	8.24559	No
SLV 10	-306	-2505	-26	0.064	258.1	0.926	1.0104	8.24559	No

Tabella dei coefficienti di sicurezza minimi

Stato limite	Coeff.s.	Comb.	Verifica
PF_SLU	0	SLU 39	No
V_SLU	0	SLU 39	No
PF_SLV	0	SLV 1	No
V_SLV	0	SLV 1	No
PFFP_SLV	0	SLV 15	No
R_SLV	0.113	SLV 3	No

Maschio 242

Verifiche condotte secondo D.M. 17-01-18 (N.T.C.)

Dati geometrici

X ini.	Y ini.	X fin.	Y fin.	Quota i.	Quota.s	l	Sp.	h netta	h ini.	h fin.	a	a.s.,sx	a.s.,dx
-6.268	-3.169	-6.268	1.141	L6	L7	4.31	0.14	3.1	3.1	3.1			

Caratteristiche del materiale

(Circolare 7 21-01-19 C8.5.I) Muratura in mattoni pieni e malta di calce LC2_Corti

fb	fk	fvk0	fmedio	τ0	fv0	μ	ϕ	fv,lim	E	G	FC
600000			345000	9000	20000	0.58	0.77	32500	320000000	128000000	1.2

Verifica a pressoflessione nel piano secondo D.M. 17-01-18 NTC §7.8.2.2.1 in combinazioni non sismiche, γM = 3

Comb.	Quota	N	M	σ0	Mu	c.s.	Verifica
SLU 58	12.05	-8934	3208.46	14806	15753.59	4.91	Si
SLU 58	15.15	-592	913.27	981	1259.8	1.379	Si
SLU 8	12.05	-6907	2754.9	11447	12792.79	4.644	Si
SLU 8	15.15	-503	825.13	833	1071.9	1.299	Si
SLU 71	12.05	-9144	3408.43	15153	16038.8	4.706	Si
SLU 71	15.15	-635	988.66	1053	1350.99	1.366	Si
SLU 29	12.05	-7617	2987.64	12623	13870.75	4.643	Si
SLU 29	15.15	-550	883.17	912	1172.42	1.328	Si
SLU 50	12.05	-8434	3175.69	13977	15055.89	4.741	Si
SLU 50	15.15	-587	930.62	974	1250.83	1.344	Si
SLU 6	12.05	-7152	2762.17	11852	13169.26	4.768	Si
SLU 6	15.15	-541	808.71	897	1153.23	1.426	Si
SLU 27	12.05	-7862	2994.91	13029	14231.98	4.752	Si
SLU 27	15.15	-589	866.75	976	1253.58	1.446	Si
SLU 16	12.05	-7408	2787.68	12276	13557.52	4.863	Si
SLU 16	15.15	-507	807.78	840	1080.9	1.338	Si
SLU 37	12.05	-8118	3020.41	13453	14604.3	4.835	Si
SLU 37	15.15	-554	865.81	919	1181.4	1.364	Si

Comb.	Quota	N	M	σ0	Mu	c.s.	Verifica
SLU 79	12.05	-9644	3441.2	15983	16705.33	4.855	Si
SLU 79	15.15	-639	971.31	1060	1359.95	1.4	Si

Verifica a pressoflessione nel piano secondo D.M. 17-01-18 NTC §7.8.2.2.1 in combinazioni sismiche, γM = 2

Comb.	Quota	N	M	σ0	Mu	c.s.	Verifica
SLV 3	12.05	-5069	2342.68	8401	10172.97	4.342	Si
SLV 3	15.15	-371	-1183.09	0	0	0	No, e>l/2
SLV 10	12.05	-6612	1091.75	10957	12970.4	11.88	Si
SLV 10	15.15	-241	3638.71	0	0	0	No, e>l/2
SLV 5	12.05	-5908	1357.07	9791	11711.44	8.63	Si
SLV 5	15.15	-230	3210.17	0	0	0	No, e>l/2
SLV 8	12.05	-5881	2397.19	9746	11661.81	4.865	Si
SLV 8	15.15	-464	-2779.52	0	0	0	No, e>l/2
SLV 4	12.05	-5069	2342.68	8401	10172.97	4.342	Si
SLV 4	15.15	-371	-1183.09	0	0	0	No, e>l/2
SLV 6	12.05	-5908	1357.07	9791	11711.44	8.63	Si
SLV 6	15.15	-230	3210.17	0	0	0	No, e>l/2
SLV 12	12.05	-6584	2131.87	10912	12921.9	6.061	Si
SLV 12	15.15	-474	-2350.98	0	0	0	No, e>l/2
SLV 7	12.05	-5881	2397.19	9746	11661.81	4.865	Si
SLV 7	15.15	-464	-2779.52	0	0	0	No, e>l/2
SLV 11	12.05	-6584	2131.87	10912	12921.9	6.061	Si
SLV 11	15.15	-474	-2350.98	0	0	0	No, e>l/2
SLV 9	12.05	-6612	1091.75	10957	12970.4	11.88	Si
SLV 9	15.15	-241	3638.71	0	0	0	No, e>l/2

Verifica a taglio nel piano secondo D.M. 17-01-18 (N.T.C.) §7.8.2.2.2 con rottura per scorrimento in combinazioni non sismiche, γM = 3

Comb.	Quota	N	V par	M	σ0	σN	l'	fvd	Vt scorr.	Vt fess.diag.	Vt,lim	c.s.	Verifica
SLU 76	12.05	-9107	-436	3148.67		15092	4.31	7568	4566			10.48	Si
SLU 76	15.15	-621	58	638.7		1313	3.3804	5731	2712			46.36	Si
SLU 71	12.05	-9144	-186	3408.43		15153	4.31	7576	4571			24.59	Si
SLU 71	15.15	-635	-134	988.66		2527	1.795	5893	1481			11.07	Si
SLU 13	12.05	-6870	-398	2495.14		11385	4.31	7074	4268			10.73	Si
SLU 13	15.15	-489	80	475.17		984	3.5475	5687	2824			35.28	Si
SLU 29	12.05	-7617	-181	2987.64		12623	4.31	7239	4368			24.08	Si
SLU 29	15.15	-550	-133	883.17		2383	1.6495	5873	1356			10.16	Si
SLU 55	12.05	-8397	-402	2915.93		13915	4.31	7411	4472			11.12	Si
SLU 55	15.15	-574	80	580.66		1195	3.4277	5715	2742			34.39	Si
SLU 5	12.05	-6369	-384	2462.37		10556	4.31	6963	4201			10.94	Si
SLU 5	15.15	-484	82	492.52		1013	3.4144	5691	2720			33.28	Si
SLU 34	12.05	-7580	-431	2727.88		12562	4.31	7230	4363			10.12	Si
SLU 34	15.15	-536	59	533.21		1100	3.4822	5702	2780			47.27	Si
SLU 26	12.05	-7079	-418	2695.1		11732	4.31	7120	4296			10.29	Si
SLU 26	15.15	-532	60	550.56		1131	3.3604	5706	2685			44.38	Si
SLU 37	12.05	-8118	-195	3020.41		13453	4.31	7349	4435			22.76	Si
SLU 37	15.15	-554	-135	865.81		2224	1.7804	5852	1459			10.79	Si
SLU 68	12.05	-8606	-422	3115.89		14262	4.31	7457	4500			10.66	Si
SLU 68	15.15	-617	60	656.05		1346	3.2747	5735	2629			43.69	Si

Verifica a taglio nel piano secondo D.M. 17-01-18 (N.T.C.) §7.8.2.2.2 con rottura per scorrimento in combinazioni sismiche, γM = 2

Comb.	Quota	N	V par	M	σ0	σN	l'	fvd	Vt scorr.	Vt fess.diag.	Vt,lim	c.s.	Verifica
SLV 6	12.05	-5908	-5375	1357.07		9791	4.31	10292	6210			1.16	Si
SLV 6	15.15	-230	-3080	3210.17		0	0	8333	0			0	No, Vu<V
SLV 9	12.05	-6612	-6017	1091.75		10957	4.31	10525	6351			1.06	Si
SLV 9	15.15	-241	-3527	3638.71		0	0	8333	0			0	No, Vu<V
SLV 4	12.05	-5069	2693	2342.68		8401	4.31	10014	6042			2.24	Si
SLV 4	15.15	-371	1695	-1183.09		0	0	8333	0			0	No, Vu<V
SLV 10	12.05	-6612	-6017	1091.75		10957	4.31	10525	6351			1.06	Si
SLV 10	15.15	-241	-3527	3638.71		0	0	8333	0			0	No, Vu<V
SLV 5	12.05	-5908	-5375	1357.07		9791	4.31	10292	6210			1.16	Si
SLV 5	15.15	-230	-3080	3210.17		0	0	8333	0			0	No, Vu<V
SLV 12	12.05	-6584	5241	2131.87		10912	4.31	10516	6345			1.21	Si
SLV 12	15.15	-474	3017	-2350.98		0	0	8333	0			0	No, Vu<V
SLV 7	12.05	-5881	5884	2397.19		9746	4.31	10282	6204			1.05	Si
SLV 7	15.15	-464	3464	-2779.52		0	0	8333	0			0	No, Vu<V
SLV 11	12.05	-6584	5241	2131.87		10912	4.31	10516	6345			1.21	Si
SLV 11	15.15	-474	3017	-2350.98		0	0	8333	0			0	No, Vu<V
SLV 8	12.05	-5881	5884	2397.19		9746	4.31	10282	6204			1.05	Si
SLV 8	15.15	-464	3464	-2779.52		0	0	8333	0			0	No, Vu<V
SLV 3	12.05	-5069	2693	2342.68		8401	4.31	10014	6042			2.24	Si
SLV 3	15.15	-371	1695	-1183.09		0	0	8333	0			0	No, Vu<V

Verifica a pressoflessione fuori piano D.M. 17-01-18 (N.T.C.)

quota 13.6 Wa 0.03 denominatore 8 γM = 2

Comb.	fd	Sa	σ0	N	M	Mc	Coeff.s.	Verifica
SLV 3	143750	0.53	0	-3297	251.26	0	0	No, e>t/2
SLV 4	143750	0.53	0	-3297	251.26	0	0	No, e>t/2
SLV 1	143750	0.53	0	-3113	251.26	0	0	No, e>t/2
SLV 9	143750	0.53	0	-2972	251.26	0	0	No, e>t/2
SLV 8	143750	0.53	0	-3549	251.26	0	0	No, e>t/2
SLV 7	143750	0.53	0	-3549	251.26	0	0	No, e>t/2
SLV 10	143750	0.53	0	-2972	251.26	0	0	No, e>t/2
SLV 5	143750	0.53	0	-2938	251.26	0	0	No, e>t/2
SLV 6	143750	0.53	0	-2938	251.26	0	0	No, e>t/2
SLV 2	143750	0.53	0	-3113	251.26	0	0	No, e>t/2

Verifica dei meccanismi locali di collasso con analisi cinematica lineare

forza di aggancio al piano = 0 quota mezzeria = 13.6 Wa = 0.03 Ta = 0.1146

Comb.	N top	N base	V orto	α0	M*	e*	a0*	aLim	Verifica

Comb.	N top	N base	V orto	α0	M*	e*	a0*	aLim	Verifica
SLV 16	-404	-7415	-11	0.036	356.6	0.928	0.55645	19.30799	No
SLV 15	-404	-7415	-11	0.036	356.6	0.928	0.55645	19.30799	No
SLV 2	-300	-5077	10	0.036	351.3	0.94	0.56378	19.30799	No
SLV 1	-300	-5077	10	0.036	351.3	0.94	0.56378	19.30799	No
SLV 13	-334	-7423	-9	0.037	352.9	0.935	0.57795	19.30799	No
SLV 14	-334	-7423	-9	0.037	352.9	0.935	0.57795	19.30799	No
SLV 3	-371	-5069	8	0.037	354.8	0.931	0.58041	19.30799	No
SLV 4	-371	-5069	8	0.037	354.8	0.931	0.58041	19.30799	No
SLV 12	-474	-6584	-7	0.037	360.6	0.921	0.58125	16.84384	No
SLV 11	-474	-6584	-7	0.037	360.6	0.921	0.58125	16.84384	No

Tabella dei coefficienti di sicurezza minimi

Stato limite	Coeff.s.	Comb.	Verifica
PF_SLU	1.299	SLU 8	Si
V_SLU	10.123	SLU 34	Si
PF_SLV	0	SLV 3	No
V_SLV	0	SLV 3	No
PFFP_SLV	0	SLV 1	No
R_SLV	0.029	SLV 15	No

Maschio 243

Verifiche condotte secondo D.M. 17-01-18 (N.T.C.)

Dati geometrici

X ini.	Y ini.	X fin.	Y fin.	Quota i.	Quota.s	l	Sp.	h netta	h ini.	h fin.	a	a.s.,sx	a.s.,dx
-7.467	-3.169	-8.548	-3.169	L6	L7	1.08	0.28	3.1	3.1	3.1			

Caratteristiche del materiale

(Circolare 7 21-01-19 C8.5.I) Muratura in mattoni pieni e malta di calce LC2_Corti

fb	fk	fvk0	fmedio	τ0	fv0	μ	ϕ	fv,lim	E	G	FC
600000			345000	9000	20000	0.58	0.77	32500	320000000	128000000	1.2

Verifica a pressoflessione nel piano secondo D.M. 17-01-18 NTC §7.8.2.2.1 in combinazioni non sismiche, γM = 3

Comb.	Quota	N	M	σ0	Mu	c.s.	Verifica
SLU 26	12.95	-622	453.96	0	0	0	No, e>l/2
SLU 26	14.85	-609	-174.86	2012	320.62	1.834	Si
SLU 38	12.95	-576	429.13	0	0	0	No, e>l/2
SLU 38	14.85	-568	-165.38	1877	299.71	1.812	Si
SLU 41	12.95	-631	421.32	0	0	0	No, e>l/2
SLU 41	14.85	-572	-169.85	1892	301.92	1.778	Si
SLU 40	12.95	-301	505.81	0	0	0	No, e>l/2
SLU 40	14.85	-561	-173.97	1855	296.22	1.703	Si
SLU 42	12.95	-376	476.33	0	0	0	No, e>l/2
SLU 42	14.85	-555	-168.62	1834	292.89	1.737	Si
SLU 39	12.95	-556	450.8	0	0	0	No, e>l/2
SLU 39	14.85	-579	-175.21	1913	305.24	1.742	Si
SLU 33	12.95	-763	463.93	0	0	0	No, e>l/2
SLU 33	14.85	-817	-203.76	2700	426.53	2.093	Si
SLU 23	12.95	-548	483.44	0	0	0	No, e>l/2
SLU 23	14.85	-615	-180.22	2033	323.93	1.797	Si
SLU 31	12.95	-256	524.77	0	0	0	No, e>l/2
SLU 31	14.85	-569	-175.27	1881	300.33	1.714	Si
SLU 34	12.95	-331	495.29	0	0	0	No, e>l/2
SLU 34	14.85	-563	-169.91	1860	297.01	1.748	Si

Verifica a pressoflessione nel piano secondo D.M. 17-01-18 NTC §7.8.2.2.1 in combinazioni sismiche, γM = 2

Comb.	Quota	N	M	σ0	Mu	c.s.	Verifica
SLV 5	12.95	-977	1875.86	0	0	0	No, e>l/2
SLV 5	14.85	-1050	-944.14	0	0	0	No, e>l/2
SLV 7	12.95	-19	-306.72	0	0	0	No, e>l/2
SLV 7	14.85	-382	188.16	1264	204.35	1.086	Si
SLV 4	12.95	901	1448.92	0	0	0	No, Trazione
SLV 4	14.85	-834	-695.9	0	0	0	No, e>l/2
SLV 3	12.95	901	1448.92	0	0	0	No, Trazione
SLV 3	14.85	-834	-695.9	0	0	0	No, e>l/2
SLV 2	12.95	613	2103.69	0	0	0	No, Trazione
SLV 2	14.85	-1035	-1035.58	0	0	0	No, e>l/2
SLV 1	12.95	613	2103.69	0	0	0	No, Trazione
SLV 1	14.85	-1035	-1035.58	0	0	0	No, e>l/2
SLV 9	12.95	-2053	1025.81	6786	1047.25	1.021	Si
SLV 9	14.85	-863	-526.07	0	0	0	No, e>l/2
SLV 6	12.95	-977	1875.86	0	0	0	No, e>l/2
SLV 6	14.85	-1050	-944.14	0	0	0	No, e>l/2
SLV 8	12.95	-19	-306.72	0	0	0	No, e>l/2
SLV 8	14.85	-382	188.16	1264	204.35	1.086	Si
SLV 10	12.95	-2053	1025.81	6786	1047.25	1.021	Si
SLV 10	14.85	-863	-526.07	0	0	0	No, e>l/2

Verifica a taglio nel piano secondo D.M. 17-01-18 (N.T.C.) §7.8.2.2.2 con rottura per scorrimento in combinazioni non sismiche, γM = 3

Comb.	Quota	N	V par	M	σ0	σN	l'	fvd	Vt scorr.	Vt fess.diag.	Vt,lim	c.s.	Verifica
SLU 38	12.95	-576	996	429.13		0	0	5556	0			0	No, Vu<V
SLU 38	14.85	-568	-372	-165.38		2716	0.7469	5918	1238			3.33	Si
SLU 52	12.95	-886	1112	541.05		0	0	5556	0			0	No, Vu<V
SLU 52	14.85	-743	-328	-202.58		3306	0.8022	5996	1347			4.11	Si
SLU 33	12.95	-763	1063	463.93		0	0	5556	0			0	No, Vu<V

Comb.	Quota	N	V par	M	σ0	σN	l'	fvd	Vt scorr.	Vt fess.diag.	Vt,lim	c.s.	Verifica
SLU 33	14.85	-817	-264	-203.76		3345	0.872	6002	1465			5.54	Si
SLU 34	12.95	-331	1048	495.29		0	0	5556	0			0	No, Vu<V
SLU 34	14.85	-563	-373	-169.91		2812	0.7146	5931	1187			3.18	Si
SLU 41	12.95	-631	1075	421.32		0	0	5556	0			0	No, Vu<V
SLU 41	14.85	-572	-166	-169.85		2799	0.7301	5929	1212			7.28	Si
SLU 39	12.95	-556	1117	450.8		0	0	5556	0			0	No, Vu<V
SLU 39	14.85	-579	-87	-175.21		2902	0.7122	5942	1185			13.57	Si
SLU 40	12.95	-301	1132	505.81		0	0	5556	0			0	No, Vu<V
SLU 40	14.85	-561	-207	-173.97		2903	0.6904	5943	1149			5.55	Si
SLU 26	12.95	-622	927	453.96		0	0	5556	0			0	No, Vu<V
SLU 26	14.85	-609	-388	-174.86		2865	0.7585	5938	1261			3.25	Si
SLU 42	12.95	-376	1090	476.33		0	0	5556	0			0	No, Vu<V
SLU 42	14.85	-555	-286	-168.62		2796	0.7086	5928	1176			4.11	Si
SLU 31	12.95	-256	1090	524.77		0	0	5556	0			0	No, Vu<V
SLU 31	14.85	-569	-294	-175.27		2918	0.6966	5945	1160			3.95	Si

Verifica a taglio nel piano secondo D.M. 17-01-18 (N.T.C.) §7.8.2.2.2 con rottura per scorrimento in combinazioni sismiche, γM = 2

Comb.	Quota	N	V par	M	σ0	σN	l'	fvd	Vt scorr.	Vt fess.diag.	Vt,lim	c.s.	Verifica
SLV 5	12.95	-977	3110	1875.86		0	0	8333	0			0	No, Vu<V
SLV 5	14.85	-1050	-2020	-944.14		0	0	8333	0			0	No, Vu<V
SLV 4	12.95	901	2779	1448.92		0	0	8333	0			0	No, Vu<V
SLV 4	14.85	-834	770	-695.9		0	0	8333	0			0	No, Vu<V
SLV 10	12.95	-2053	1686	1025.81		60420	0.1213	16250	552			0.33	No, Vu<V
SLV 10	14.85	-863	-2186	-526.07		0	0	8333	0			0	No, Vu<V
SLV 2	12.95	613	3698	2103.69		0	0	8333	0			0	No, Vu<V
SLV 2	14.85	-1035	-428	-1035.58		0	0	8333	0			0	No, Vu<V
SLV 7	12.95	-19	46	-306.72		0	0	8333	0			0	No, Vu<V
SLV 7	14.85	-382	1974	188.16		9492	0.1438	10232	412			0.21	No, Vu<V
SLV 3	12.95	901	2779	1448.92		0	0	8333	0			0	No, Vu<V
SLV 3	14.85	-834	770	-695.9		0	0	8333	0			0	No, Vu<V
SLV 8	12.95	-19	46	-306.72		0	0	8333	0			0	No, Vu<V
SLV 8	14.85	-382	1974	188.16		9492	0.1438	10232	412			0.21	No, Vu<V
SLV 9	12.95	-2053	1686	1025.81		60420	0.1213	16250	552			0.33	No, Vu<V
SLV 9	14.85	-863	-2186	-526.07		0	0	8333	0			0	No, Vu<V
SLV 1	12.95	613	3698	2103.69		0	0	8333	0			0	No, Vu<V
SLV 1	14.85	-1035	-428	-1035.58		0	0	8333	0			0	No, Vu<V
SLV 6	12.95	-977	3110	1875.86		0	0	8333	0			0	No, Vu<V
SLV 6	14.85	-1050	-2020	-944.14		0	0	8333	0			0	No, Vu<V

Verifica a pressoflessione fuori piano D.M. 17-01-18 (N.T.C.)

quota 13.6 Wa 0.05 denominatore 8 γM = 2

Comb.	fd	Sa	σ0	N	M	Mc	Coeff.s.	Verifica
SLV 5	143750	0.53	0	-193	117.75	0	0	No, e>t/2
SLV 7	143750	0.53	0	-332	117.75	0	0	No, e>t/2
SLV 2	143750	0.53	0	1046	117.75	0	0	No, Trazione
SLV 6	143750	0.53	0	-193	117.75	0	0	No, e>t/2
SLV 1	143750	0.53	0	1046	117.75	0	0	No, Trazione
SLV 8	143750	0.53	0	-332	117.75	0	0	No, e>t/2
SLV 4	143750	0.53	0	1004	117.75	0	0	No, Trazione
SLV 3	143750	0.53	0	1004	117.75	0	0	No, Trazione
SLV 10	143750	0.53	4283	-1296	117.75	175.04	1.49	Si
SLV 9	143750	0.53	4283	-1296	117.75	175.04	1.49	Si

Verifica dei meccanismi locali di collasso con analisi cinematica lineare

forza di aggancio al piano = 0 quota mezzeria = 13.6 Wa = 0.05 Ta = 0.0573

Comb.	N top	N base	V orto	α0	M*	e*	a0*	aLim	Verifica
SLV 11	-783	794	-2	0	0	0	0	8.24559	No, Trazione
SLV 9	126	-4522	3	0	0	0	0	8.24559	No, Trazione
SLV 7	-653	185	-7	0	0	0	0	8.24559	No, Trazione
SLV 6	256	-5131	-2	0	0	0	0	8.24559	No, Trazione
SLV 12	-783	794	-2	0	0	0	0	8.24559	No, Trazione
SLV 2	89	-3981	-9	0	0	0	0	9.07197	No, Trazione
SLV 8	-653	185	-7	0	0	0	0	8.24559	No, Trazione
SLV 5	256	-5131	-2	0	0	0	0	8.24559	No, Trazione
SLV 1	89	-3981	-9	0	0	0	0	9.07197	No, Trazione
SLV 10	126	-4522	3	0	0	0	0	8.24559	No, Trazione

Tabella dei coefficienti di sicurezza minimi

Stato limite	Coeff.s.	Comb.	Verifica
PF_SLU	0	SLU 2	No
V_SLU	0	SLU 2	No
PF_SLV	0	SLV 4	No
V_SLV	0	SLV 1	No
PFFP_SLV	0	SLV 4	No
R_SLV	0	SLV 12	No

Maschio 244

Verifiche condotte secondo D.M. 17-01-18 (N.T.C.)

Dati geometrici

X ini.	Y ini.	X fin.	Y fin.	Quota i.	Quota.s	l	Sp.	h netta	h ini.	h fin.	a	a.s.,sx	a.s.,dx
-5.158	1.141	-5.158	5.808	L6	L7	4.667	0.14	3.1	3.1	3.1			

Caratteristiche del materiale

(Circolare 7 21-01-19 C8.5.I) Muratura in mattoni pieni e malta di calce LC2_Corti

fb	fk	fvk0	fmedio	τ0	fv0	μ	ϕ	fv,lim	E	G	FC
600000			345000	9000	20000	0.58	0.77	32500	320000000	128000000	1.2

Verifica a pressoflessione nel piano secondo D.M. 17-01-18 NTC §7.8.2.2.1 in combinazioni non sismiche, γM = 3

Comb.	Quota	N	M	σ0	Mu	c.s.	Verifica
SLU 47	12.05	-9526	-1838.87	14579	18252.23	9.926	Si
SLU 47	15.15	-3409	5297.76	5218	7446.67	1.406	Si
SLU 72	12.05	-11267	-2273.37	17243	20727.77	9.118	Si
SLU 72	15.15	-4536	6969.54	6942	9683.77	1.389	Si
SLU 71	12.05	-11246	-2217.66	17211	20699.29	9.334	Si
SLU 71	15.15	-4537	6972.46	6944	9685.56	1.389	Si
SLU 8	12.05	-8614	-1799.85	13184	16849.65	9.362	Si
SLU 8	15.15	-3756	5787.13	5748	8146.96	1.408	Si
SLU 50	12.05	-10371	-2089.71	15872	19486.47	9.325	Si
SLU 50	15.15	-4275	6613.64	6542	9174.57	1.387	Si
SLU 79	12.05	-11777	-2191.37	18024	21402.8	9.767	Si
SLU 79	15.15	-4509	6921.33	6901	9631.62	1.392	Si
SLU 51	12.05	-10392	-2145.43	15904	19516.56	9.097	Si
SLU 51	15.15	-4274	6610.72	6541	9172.76	1.388	Si
SLU 58	12.05	-10902	-2063.43	16685	20230.74	9.804	Si
SLU 58	15.15	-4247	6562.51	6499	9119.99	1.39	Si
SLU 59	12.05	-10923	-2119.14	16717	20259.85	9.56	Si
SLU 59	15.15	-4246	6559.59	6498	9118.17	1.39	Si
SLU 80	12.05	-11798	-2247.09	18056	21430.29	9.537	Si
SLU 80	15.15	-4508	6918.41	6900	9629.83	1.392	Si

Verifica a pressoflessione nel piano secondo D.M. 17-01-18 NTC §7.8.2.2.1 in combinazioni sismiche, γM = 2

Comb.	Quota	N	M	σ0	Mu	c.s.	Verifica
SLV 5	12.05	-5309	-4140.66	8125	11565.14	2.793	Si
SLV 5	15.15	-2405	6642.06	0	0	0	No, e>l/2
SLV 6	12.05	-5309	-4140.66	8125	11565.14	2.793	Si
SLV 6	15.15	-2405	6642.06	0	0	0	No, e>l/2
SLV 9	12.05	-6303	-3103.21	9645	13547.07	4.365	Si
SLV 9	15.15	-2016	5994.97	0	0	0	No, e>l/2
SLV 4	12.05	-6035	-2126.42	9237	13020.06	6.123	Si
SLV 4	15.15	-2709	3411.87	4146	6107.71	1.79	Si
SLV 1	12.05	-5165	-3614.69	7904	11273.54	3.119	Si
SLV 1	15.15	-2778	5251.16	4252	6258.01	1.192	Si
SLV 3	12.05	-6035	-2126.42	9237	13020.06	6.123	Si
SLV 3	15.15	-2709	3411.87	4146	6107.71	1.79	Si
SLV 2	12.05	-5165	-3614.69	7904	11273.54	3.119	Si
SLV 2	15.15	-2778	5251.16	4252	6258.01	1.192	Si
SLV 10	12.05	-6303	-3103.21	9645	13547.07	4.365	Si
SLV 10	15.15	-2016	5994.97	0	0	0	No, e>l/2
SLV 14	12.05	-8478	-156.54	12974	17683.27	112.964	Si
SLV 14	15.15	-1482	3094.18	2268	3394.1	1.097	Si
SLV 13	12.05	-8478	-156.54	12974	17683.27	112.964	Si
SLV 13	15.15	-1482	3094.18	2268	3394.1	1.097	Si

Verifica a taglio nel piano secondo D.M. 17-01-18 (N.T.C.) §7.8.2.2.2 con rottura per scorrimento in combinazioni non sismiche, γM = 3

Comb.	Quota	N	V par	M	σ0	σN	l'	fvd	Vt scorr.	Vt fess.diag.	Vt,lim	c.s.	Verifica
SLU 36	12.05	-10203	627	-2035.86		15614	4.6673	7637	4991			7.96	Si
SLU 36	15.15	-3880	-53	5810.73		11049	2.5086	7029	2469			46.87	Si
SLU 81	12.05	-10245	638	-1492.69		15679	4.6673	7646	4996			7.83	Si
SLU 81	15.15	-2770	44	4277.4		8355	2.368	6670	2211			50.17	Si
SLU 83	12.05	-11125	674	-1836.4		17026	4.6673	7826	5113			7.59	Si
SLU 83	15.15	-3634	-11	5588.41		10873	2.387	7005	2341			204.71	Si
SLU 84	12.05	-11146	668	-1892.11		17058	4.6673	7830	5116			7.66	Si
SLU 84	15.15	-3633	-20	5585.49		10865	2.3882	7004	2342			115.89	Si
SLU 41	12.05	-9369	631	-1546.53		14338	4.6673	7467	4879			7.73	Si
SLU 41	15.15	-3115	15	4761.9		9214	2.4148	6784	2294			157.11	Si
SLU 82	12.05	-10266	632	-1548.41		15712	4.6673	7650	4999			7.91	Si
SLU 82	15.15	-2769	35	4274.48		8346	2.3696	6668	2212			62.66	Si
SLU 42	12.05	-9390	625	-1602.25		14370	4.6673	7472	4882			7.81	Si
SLU 42	15.15	-3114	6	4758.98		9206	2.4163	6783	2295			393.76	Si
SLU 78	12.05	-11959	670	-2325.73		18302	4.6673	7996	5225			7.8	Si
SLU 78	15.15	-4399	-79	6637.24		12698	2.4745	7249	2511			31.91	Si
SLU 35	12.05	-10182	633	-1980.15		15582	4.6673	7633	4988			7.88	Si
SLU 35	15.15	-3881	-44	5813.65		11057	2.5074	7030	2468			56.21	Si
SLU 77	12.05	-11938	676	-2270.01		18270	4.6673	7992	5222			7.73	Si
SLU 77	15.15	-4400	-70	6640.16		12706	2.4735	7250	2510			35.9	Si

Verifica a taglio nel piano secondo D.M. 17-01-18 (N.T.C.) §7.8.2.2.2 con rottura per scorrimento in combinazioni sismiche, γM = 2

Comb.	Quota	N	V par	M	σ0	σN	l'	fvd	Vt scorr.	Vt fess.diag.	Vt,lim	c.s.	Verifica
SLV 2	12.05	-5165	-5133	-3614.69		7904	4.6673	9914	6478			1.26	Si
SLV 2	15.15	-2778	-3013	5251.16		14912	1.3308	11316	2108			0.7	No, Vu<V
SLV 5	12.05	-5309	-7361	-4140.66		8135	4.6611	9960	6500			0.88	No, Vu<V
SLV 5	15.15	-2405	-4917	6642.06		0	0	8333	0			0	No, Vu<V
SLV 8	12.05	-8211	5976	820.26		12565	4.6673	10846	7087			1.19	Si
SLV 8	15.15	-2175	3868	511.07		3328	4.6673	8999	5880			1.52	Si
SLV 6	12.05	-5309	-7361	-4140.66		8135	4.6611	9960	6500			0.88	No, Vu<V
SLV 6	15.15	-2405	-4917	6642.06		0	0	8333	0			0	No, Vu<V
SLV 10	12.05	-6303	-5271	-3103.21		9645	4.6673	10262	6706			1.27	Si
SLV 10	15.15	-2016	-3913	5994.97		0	0	8333	0			0	No, Vu<V
SLV 9	12.05	-6303	-5271	-3103.21		9645	4.6673	10262	6706			1.27	Si
SLV 9	15.15	-2016	-3913	5994.97		0	0	8333	0			0	No, Vu<V
SLV 11	12.05	-9204	8067	1857.7		14086	4.6673	11151	7286			0.9	No, Vu<V
SLV 11	15.15	-1786	4871	-136.02		2733	4.6673	8880	5802			1.19	Si
SLV 7	12.05	-8211	5976	820.26		12565	4.6673	10846	7087			1.19	Si
SLV 7	15.15	-2175	3868	511.07		3328	4.6673	8999	5880			1.52	Si

Comb.	Quota	N	V par	M	σ0	σN	l'	fvd	Vt scorr.	Vt fess.diag.	Vt,lim	c.s.	Verifica
SLV 12	12.05	-9204	8067	1857.7		14086	4.6673	11151	7286			0.9	No, Vu<V
SLV 12	15.15	-1786	4871	-136.02		2733	4.6673	8880	5802			1.19	Si
SLV 1	12.05	-5165	-5133	-3614.69		7904	4.6673	9914	6478			1.26	Si
SLV 1	15.15	-2778	-3013	5251.16		14912	1.3308	11316	2108			0.7	No, Vu<V

Verifica a pressoflessione fuori piano D.M. 17-01-18 (N.T.C.)

quota 13.6 Wa 0.03 denominatore 8 γM = 2

Comb.	fd	Sa	σ0	N	M	Mc	Coeff.s.	Verifica
SLV 7	143750	0.53	0	-3616	272.1	0	0	No, e>t/2
SLV 8	143750	0.53	0	-3616	272.1	0	0	No, e>t/2
SLV 1	143750	0.53	0	-3680	272.1	0	0	No, e>t/2
SLV 3	143750	0.53	0	-3413	272.1	0	0	No, e>t/2
SLV 2	143750	0.53	0	-3680	272.1	0	0	No, e>t/2
SLV 4	143750	0.53	0	-3413	272.1	0	0	No, e>t/2
SLV 11	143750	0.53	6210	-4057	272.1	269.59	0.99	No, M>Mu
SLV 12	143750	0.53	6210	-4057	272.1	269.59	0.99	No, M>Mu
SLV 5	143750	0.53	6897	-4506	272.1	297.64	1.09	Si
SLV 6	143750	0.53	6897	-4506	272.1	297.64	1.09	Si

Verifica dei meccanismi locali di collasso con analisi cinematica lineare

forza di aggancio al piano = 0 quota mezzeria = 13.6 Wa = 0.03 Ta = 0.1146

Comb.	N top	N base	V orto	α0	M*	e*	a0*	aLim	Verifica
SLV 3	-2709	-6035	13	0.029	578.3	0.893	0.46801	19.30799	No
SLV 4	-2709	-6035	13	0.029	578.3	0.893	0.46801	19.30799	No
SLV 2	-2778	-5165	3	0.031	584.9	0.893	0.50166	19.30799	No
SLV 1	-2778	-5165	3	0.031	584.9	0.893	0.50166	19.30799	No
SLV 7	-2175	-8211	21	0.028	527.9	0.89	0.44983	16.84384	No
SLV 8	-2175	-8211	21	0.028	527.9	0.89	0.44983	16.84384	No
SLV 13	-1482	-8478	-7	0.033	465.2	0.89	0.53793	19.30799	No
SLV 14	-1482	-8478	-7	0.033	465.2	0.89	0.53793	19.30799	No
SLV 12	-1786	-9204	18	0.029	492.2	0.889	0.47272	16.84384	No
SLV 11	-1786	-9204	18	0.029	492.2	0.889	0.47272	16.84384	No

Tabella dei coefficienti di sicurezza minimi

Stato limite	Coeff.s.	Comb.	Verifica
PF_SLU	1.387	SLU 50	Si
V_SLU	7.585	SLU 83	Si
PF_SLV	0	SLV 5	No
V_SLV	0	SLV 5	No
PFFP_SLV	0	SLV 1	No
R_SLV	0.024	SLV 3	No

Maschio 245

Verifiche condotte secondo D.M. 17-01-18 (N.T.C.)

Dati geometrici

X ini.	Y ini.	X fin.	Y fin.	Quota i.	Quota.s	l	Sp.	h netta	h ini.	h fin.	a	a.s.,sx	a.s.,dx
-5.088	5.808	-5.088	5.94	L6	L7	0.132	0.28	3.1	3.1	3.1			

Caratteristiche del materiale

(Circolare 7 21-01-19 C8.5.I) Muratura in mattoni pieni e malta di calce LC2_Corti

fb	fk	fvk0	fmedio	τ0	fv0	μ	ϕ	fv,lim	E	G	FC
600000			345000	9000	20000	0.58	0.77	32500	320000000	128000000	1.2

Verifica a pressoflessione nel piano secondo D.M. 17-01-18 NTC §7.8.2.2.1 in combinazioni non sismiche, γM = 3

Comb.	Quota	N	M	σ0	Mu	c.s.	Verifica
SLU 71	14.05	-1236	18.17	33542	47.86	2.635	Si
SLU 71	14.85	-1364	-36.63	36995	48.98	1.337	Si
SLU 9	14.05	-1024	18.07	27775	44.4	2.458	Si
SLU 9	14.85	-1104	-33.21	29963	45.95	1.384	Si
SLU 51	14.05	-1182	21.19	32059	47.16	2.226	Si
SLU 51	14.85	-1260	-38.07	34196	48.13	1.264	Si
SLU 72	14.05	-1235	18.21	33498	47.84	2.627	Si
SLU 72	14.85	-1361	-36.84	36935	48.97	1.329	Si
SLU 50	14.05	-1183	21.14	32103	47.18	2.232	Si
SLU 50	14.85	-1263	-37.86	34257	48.15	1.272	Si
SLU 69	14.05	-1209	15.48	32798	47.53	3.07	Si
SLU 69	14.85	-1349	-33.45	36602	48.89	1.462	Si
SLU 70	14.05	-1207	15.53	32755	47.51	3.059	Si
SLU 70	14.85	-1347	-33.66	36542	48.88	1.452	Si
SLU 48	14.05	-1156	18.46	31359	46.78	2.534	Si
SLU 48	14.85	-1248	-34.67	33863	48	1.384	Si
SLU 8	14.05	-1025	18.02	27818	44.44	2.466	Si
SLU 8	14.85	-1107	-33	30024	45.99	1.394	Si
SLU 49	14.05	-1154	18.51	31316	46.76	2.527	Si
SLU 49	14.85	-1246	-34.88	33803	47.97	1.375	Si

Verifica a pressoflessione nel piano secondo D.M. 17-01-18 NTC §7.8.2.2.1 in combinazioni sismiche, γM = 2

Comb.	Quota	N	M	σ0	Mu	c.s.	Verifica
SLV 7	14.05	-111	-89.13	0	0	0	No, e>l/2
SLV 7	14.85	-1176	111.27	0	0	0	No, e>l/2
SLV 8	14.05	-111	-89.13	0	0	0	No, e>l/2
SLV 8	14.85	-1176	111.27	0	0	0	No, e>l/2
SLV 4	14.05	-735	54.02	0	0	0	No, e>l/2

Comb.	Quota	N	M	σ0	Mu	c.s.	Verifica
SLV 4	14.85	-399	-62.73	0	0	0	No, e>l/2
SLV 9	14.05	-1078	97.82	0	0	0	No, e>l/2
SLV 9	14.85	-171	-137.13	0	0	0	No, e>l/2
SLV 3	14.05	-735	54.02	0	0	0	No, e>l/2
SLV 3	14.85	-399	-62.73	0	0	0	No, e>l/2
SLV 6	14.05	-1266	149.06	0	0	0	No, e>l/2
SLV 6	14.85	110	-194.53	0	0	0	No, Trazione
SLV 10	14.05	-1078	97.82	0	0	0	No, e>l/2
SLV 10	14.85	-171	-137.13	0	0	0	No, e>l/2
SLV 1	14.05	-1082	125.47	0	0	0	No, e>l/2
SLV 1	14.85	-13	-154.47	0	0	0	No, e>l/2
SLV 5	14.05	-1266	149.06	0	0	0	No, e>l/2
SLV 5	14.85	110	-194.53	0	0	0	No, Trazione
SLV 2	14.05	-1082	125.47	0	0	0	No, e>l/2
SLV 2	14.85	-13	-154.47	0	0	0	No, e>l/2

Verifica a taglio nel piano secondo D.M. 17-01-18 (N.T.C.) §7.8.2.2.2 con rottura per scorrimento in combinazioni non sismiche, γM = 3

Comb.	Quota	N	V par	M	σ0	σN	I'	fvd	Vt scorr.	Vt fess.diag.	Vt,lim	c.s.	Verifica
SLU 8	14.05	-1025	33	18.02		27818	0.1316	9265	341			10.44	Si
SLU 8	14.85	-1107	118	-33		36599	0.108	10435	316			2.67	Si
SLU 49	14.05	-1154	30	18.51		31316	0.1316	9731	359			11.78	Si
SLU 49	14.85	-1246	125	-34.88		39217	0.1135	10784	343			2.74	Si
SLU 30	14.05	-1077	19	15.09		29214	0.1316	9451	348			18.41	Si
SLU 30	14.85	-1205	115	-31.99		36532	0.1178	10427	344			2.99	Si
SLU 71	14.05	-1236	26	18.17		33542	0.1316	10028	370			14.43	Si
SLU 71	14.85	-1364	131	-36.63		41676	0.1168	10833	354			2.7	Si
SLU 72	14.05	-1235	26	18.21		33498	0.1316	10022	369			14.32	Si
SLU 72	14.85	-1361	132	-36.84		41821	0.1163	10833	353			2.66	Si
SLU 48	14.05	-1156	30	18.46		31359	0.1316	9737	359			11.85	Si
SLU 48	14.85	-1248	124	-34.67		39062	0.1141	10764	344			2.77	Si
SLU 51	14.05	-1182	40	21.19		32059	0.1316	9830	362			9.11	Si
SLU 51	14.85	-1260	136	-38.07		42132	0.1068	10833	324			2.37	Si
SLU 47	14.05	-961	27	15.71		26085	0.1316	9034	333			12.35	Si
SLU 47	14.85	-1023	104	-29.1		32593	0.1121	9901	311			2.98	Si
SLU 50	14.05	-1183	40	21.14		32103	0.1316	9836	363			9.16	Si
SLU 50	14.85	-1263	136	-37.86		41948	0.1075	10833	326			2.4	Si
SLU 9	14.05	-1024	33	18.07		27775	0.1316	9259	341			10.38	Si
SLU 9	14.85	-1104	119	-33.21		36781	0.1072	10460	314			2.63	Si

Verifica a taglio nel piano secondo D.M. 17-01-18 (N.T.C.) §7.8.2.2.2 con rottura per scorrimento in combinazioni sismiche, γM = 2

Comb.	Quota	N	V par	M	σ0	σN	I'	fvd	Vt scorr.	Vt fess.diag.	Vt,lim	c.s.	Verifica
SLV 2	14.05	-1082	416	125.47		0	0	8333	0			0	No, Vu<V
SLV 2	14.85	-13	741	-154.47		0	0	8333	0			0	No, Vu<V
SLV 8	14.05	-111	-301	-89.13		0	0	8333	0			0	No, Vu<V
SLV 8	14.85	-1176	-931	111.27		0	0	8333	0			0	No, Vu<V
SLV 9	14.05	-1078	293	97.82		0	0	8333	0			0	No, Vu<V
SLV 9	14.85	-171	1023	-137.13		0	0	8333	0			0	No, Vu<V
SLV 4	14.05	-735	183	54.02		0	0	8333	0			0	No, Vu<V
SLV 4	14.85	-399	88	-62.73		0	0	8333	0			0	No, Vu<V
SLV 1	14.05	-1082	416	125.47		0	0	8333	0			0	No, Vu<V
SLV 1	14.85	-13	741	-154.47		0	0	8333	0			0	No, Vu<V
SLV 7	14.05	-111	-301	-89.13		0	0	8333	0			0	No, Vu<V
SLV 7	14.85	-1176	-931	111.27		0	0	8333	0			0	No, Vu<V
SLV 6	14.05	-1266	475	149.06		0	0	8333	0			0	No, Vu<V
SLV 6	14.85	110	1244	-194.53		0	0	8333	0			0	No, Vu<V
SLV 3	14.05	-735	183	54.02		0	0	8333	0			0	No, Vu<V
SLV 3	14.85	-399	88	-62.73		0	0	8333	0			0	No, Vu<V
SLV 10	14.05	-1078	293	97.82		0	0	8333	0			0	No, Vu<V
SLV 10	14.85	-171	1023	-137.13		0	0	8333	0			0	No, Vu<V
SLV 5	14.05	-1266	475	149.06		0	0	8333	0			0	No, Vu<V
SLV 5	14.85	110	1244	-194.53		0	0	8333	0			0	No, Vu<V

Verifica a pressoflessione fuori piano D.M. 17-01-18 (N.T.C.)

quota 13.6 Wa 0.05 denominatore 8 γM = 2

Comb.	fd	Sa	σ0	N	M	Mc	Coeff.s.	Verifica
SLV 6	143750	0.53	0	-17	14.68	0	0	No, e>t/2
SLV 5	143750	0.53	0	-17	14.68	0	0	No, e>t/2
SLV 9	143750	0.53	0	7	14.68	0	0	No, Trazione
SLV 10	143750	0.53	0	7	14.68	0	0	No, Trazione
SLV 14	143750	0.53	3492	-129	14.68	17.5	1.19	Si
SLV 13	143750	0.53	3492	-129	14.68	17.5	1.19	Si
SLV 2	143750	0.53	5651	-208	14.68	27.81	1.89	Si
SLV 1	143750	0.53	5651	-208	14.68	27.81	1.89	Si
SLV 15	143750	0.53	7286	-269	14.68	35.35	2.41	Si
SLV 16	143750	0.53	7286	-269	14.68	35.35	2.41	Si

Verifica dei meccanismi locali di collasso con analisi cinematica lineare

forza di aggancio al piano = 0 quota mezzeria = 13.6 Wa = 0.05 Ta = 0.0573

Comb.	N top	N base	V orto	α0	M*	e*	a0*	aLim	Verifica
SLV 2	-487	63	-21	0	0	0	0	9.07197	No, Trazione
SLV 5	-352	147	-38	0	0	0	0	8.24559	No, Trazione
SLV 1	-487	63	-21	0	0	0	0	9.07197	No, Trazione
SLV 6	-352	147	-38	0	0	0	0	8.24559	No, Trazione
SLV 10	-445	-4	-30	0	61.7	0.929	0	8.24559	No
SLV 9	-445	-4	-30	0	61.7	0.929	0	8.24559	No
SLV 11	-1144	-748	44	0.013	132.6	0.964	0.2017	8.24559	No
SLV 12	-1144	-748	44	0.013	132.6	0.964	0.2017	8.24559	No
SLV 7	-1051	-597	36	0.018	123.1	0.961	0.26615	8.24559	No
SLV 8	-1051	-597	36	0.018	123.1	0.961	0.26615	8.24559	No

Tabella dei coefficienti di sicurezza minimi

Stato limite	Coeff.s.	Comb.	Verifica
PF_SLU	1.264	SLU 51	Si
V_SLU	2.375	SLU 51	Si
PF_SLV	0	SLV 12	No
V_SLV	0	SLV 1	No
PFFP_SLV	0	SLV 10	No
R_SLV	0	SLV 6	No

Maschio 246

Verifiche condotte secondo D.M. 17-01-18 (N.T.C.)

Dati geometrici

X ini.	Y ini.	X fin.	Y fin.	Quota i.	Quota.s	l	Sp.	h netta	h ini.	h fin.	a	a.s.,sx	a.s.,dx
-5.088	6.44	-5.088	6.5	L6	L7	0.06	0.28	3.1	3.1	3.1			

Caratteristiche del materiale

(Circolare 7 21-01-19 C8.5.I) Muratura in mattoni pieni e malta di calce LC2_Corti

fb	fk	fvk0	fmedio	τ0	fv0	μ	ϕ	fv,lim	E	G	FC
600000			345000	9000	20000	0.58	0.77	32500	320000000	128000000	1.2

Verifica a pressoflessione nel piano secondo D.M. 17-01-18 NTC §7.8.2.2.1 in combinazioni non sismiche, γM = 3

Comb.	Quota	N	M	σ0	Mu	c.s.	Verifica
SLU 61	14.05	-20	-1.33	0	0	0	No, e>l/2
SLU 61	14.85	33	0.43	0	0	0	No, Trazione
SLU 60	14.05	-21	-1.34	0	0	0	No, e>l/2
SLU 60	14.85	31	0.42	0	0	0	No, Trazione
SLU 55	14.05	19	0.16	0	0	0	No, Trazione
SLU 55	14.85	57	-1.37	0	0	0	No, Trazione
SLU 54	14.05	-5	-0.43	0	0	0	No, e>l/2
SLU 54	14.85	40	-0.75	0	0	0	No, Trazione
SLU 1	14.05	-1	0.29	0	0	0	No, e>l/2
SLU 1	14.85	25	-1.03	0	0	0	No, Trazione
SLU 58	14.05	46	1.05	0	0	0	No, Trazione
SLU 58	14.85	77	-2.59	0	0	0	No, Trazione
SLU 53	14.05	-7	-0.43	0	0	0	No, e>l/2
SLU 53	14.85	38	-0.76	0	0	0	No, Trazione
SLU 57	14.05	26	0.47	0	0	0	No, Trazione
SLU 57	14.85	62	-1.96	0	0	0	No, Trazione
SLU 56	14.05	24	0.47	0	0	0	No, Trazione
SLU 56	14.85	60	-1.97	0	0	0	No, Trazione
SLU 59	14.05	48	1.06	0	0	0	No, Trazione
SLU 59	14.85	78	-2.58	0	0	0	No, Trazione

Verifica a pressoflessione nel piano secondo D.M. 17-01-18 NTC §7.8.2.2.1 in combinazioni sismiche, γM = 2

Comb.	Quota	N	M	σ0	Mu	c.s.	Verifica
SLV 10	14.05	289	12	0	0	0	No, Trazione
SLV 10	14.85	-90	-16.38	0	0	0	No, e>l/2
SLV 9	14.05	289	12	0	0	0	No, Trazione
SLV 9	14.85	-90	-16.38	0	0	0	No, e>l/2
SLV 6	14.05	355	24.74	0	0	0	No, Trazione
SLV 6	14.85	-77	-28.75	0	0	0	No, e>l/2
SLV 4	14.05	3	15.28	0	0	0	No, Trazione
SLV 4	14.85	82	-14.39	0	0	0	No, Trazione
SLV 2	14.05	201	26.51	0	0	0	No, Trazione
SLV 2	14.85	15	-27.67	0	0	0	No, Trazione
SLV 1	14.05	201	26.51	0	0	0	No, Trazione
SLV 1	14.85	15	-27.67	0	0	0	No, Trazione
SLV 3	14.05	3	15.28	0	0	0	No, Trazione
SLV 3	14.85	82	-14.39	0	0	0	No, Trazione
SLV 8	14.05	-303	-12.67	0	0	0	No, e>l/2
SLV 8	14.85	144	15.54	0	0	0	No, Trazione
SLV 7	14.05	-303	-12.67	0	0	0	No, e>l/2
SLV 7	14.85	144	15.54	0	0	0	No, Trazione
SLV 5	14.05	355	24.74	0	0	0	No, Trazione
SLV 5	14.85	-77	-28.75	0	0	0	No, e>l/2

Verifica a taglio nel piano secondo D.M. 17-01-18 (N.T.C.) §7.8.2.2.2 con rottura per scorrimento in combinazioni non sismiche, γM = 3

Comb.	Quota	N	V par	M	σ0	σN	l'	fvd	Vt scorr.	Vt fess.diag.	Vt,lim	c.s.	Verifica
SLU 53	14.05	-7	-2	-0.43		0	0	5556	0			0	No, Vu<V
SLU 53	14.85	38	1	-0.76		0	0	5556	0			0	No, Vu<V
SLU 61	14.05	-20	-6	-1.33		0	0	5556	0			0	No, Vu<V
SLU 61	14.85	33	-3	0.43		0	0	5556	0			0	No, Vu<V
SLU 56	14.05	24	1	0.47		0	0	5556	0			0	No, Vu<V
SLU 56	14.85	60	5	-1.97		0	0	5556	0			0	No, Vu<V
SLU 60	14.05	-21	-6	-1.34		0	0	5556	0			0	No, Vu<V
SLU 60	14.85	31	-3	0.42		0	0	5556	0			0	No, Vu<V
SLU 58	14.05	46	3	1.05		0	0	5556	0			0	No, Vu<V
SLU 58	14.85	77	8	-2.59		0	0	5556	0			0	No, Vu<V
SLU 59	14.05	48	3	1.06		0	0	5556	0			0	No, Vu<V
SLU 59	14.85	78	8	-2.58		0	0	5556	0			0	No, Vu<V
SLU 1	14.05	-1	1	0.29		0	0	5556	0			0	No, Vu<V
SLU 1	14.85	25	3	-1.03		0	0	5556	0			0	No, Vu<V
SLU 55	14.05	19	0	0.16		0	0	5556	0			0	No, Vu<V
SLU 55	14.85	57	3	-1.37		0	0	5556	0			0	No, Vu<V
SLU 57	14.05	26	1	0.47		0	0	5556	0			0	No, Vu<V

Comb.	Quota	N	V par	M	σ0	σN	l'	fvd	Vt scorr.	Vt fess.diag.	Vt,lim	c.s.	Verifica
SLU 57	14.85	62	5	-1.96		0	0	5556	0			0	No, Vu<V
SLU 54	14.05	-5	-2	-0.43		0	0	5556	0			0	No, Vu<V
SLU 54	14.85	40	1	-0.75		0	0	5556	0			0	No, Vu<V

Verifica a taglio nel piano secondo D.M. 17-01-18 (N.T.C.) §7.8.2.2.2 con rottura per scorrimento in combinazioni sismiche, γM = 2

Comb.	Quota	N	V par	M	σ0	σN	l'	fvd	Vt scorr.	Vt fess.diag.	Vt,lim	c.s.	Verifica
SLV 3	14.05	3	35	15.28		0	0	8333	0			0	No, Vu<V
SLV 3	14.85	82	3	-14.39		0	0	8333	0			0	No, Vu<V
SLV 9	14.05	289	70	12		0	0	8333	0			0	No, Vu<V
SLV 9	14.85	-90	59	-16.38		0	0	8333	0			0	No, Vu<V
SLV 2	14.05	201	90	26.51		0	0	8333	0			0	No, Vu<V
SLV 2	14.85	15	42	-27.67		0	0	8333	0			0	No, Vu<V
SLV 5	14.05	355	109	24.74		0	0	8333	0			0	No, Vu<V
SLV 5	14.85	-77	72	-28.75		0	0	8333	0			0	No, Vu<V
SLV 7	14.05	-303	-74	-12.67		0	0	8333	0			0	No, Vu<V
SLV 7	14.85	144	-58	15.54		0	0	8333	0			0	No, Vu<V
SLV 8	14.05	-303	-74	-12.67		0	0	8333	0			0	No, Vu<V
SLV 8	14.85	144	-58	15.54		0	0	8333	0			0	No, Vu<V
SLV 10	14.05	289	70	12		0	0	8333	0			0	No, Vu<V
SLV 10	14.85	-90	59	-16.38		0	0	8333	0			0	No, Vu<V
SLV 4	14.05	3	35	15.28		0	0	8333	0			0	No, Vu<V
SLV 4	14.85	82	3	-14.39		0	0	8333	0			0	No, Vu<V
SLV 6	14.05	355	109	24.74		0	0	8333	0			0	No, Vu<V
SLV 6	14.85	-77	72	-28.75		0	0	8333	0			0	No, Vu<V
SLV 1	14.05	201	90	26.51		0	0	8333	0			0	No, Vu<V
SLV 1	14.85	15	42	-27.67		0	0	8333	0			0	No, Vu<V

Verifica a pressoflessione fuori piano D.M. 17-01-18 (N.T.C.)

quota 13.6 Wa 0.05 denominatore 8 γM = 2

Comb.	fd	Sa	σ0	N	M	Mc	Coeff.s.	Verifica
SLV 1	143750	0.53	0	3	6.68	0	0	No, Trazione
SLV 4	143750	0.53	0	11	6.68	0	0	No, Trazione
SLV 6	143750	0.53	0	-40	6.68	0	0	No, e>t/2
SLV 11	143750	0.53	0	-40	6.68	0	0	No, e>t/2
SLV 7	143750	0.53	0	-12	6.68	0	0	No, e>t/2
SLV 3	143750	0.53	0	11	6.68	0	0	No, Trazione
SLV 8	143750	0.53	0	-12	6.68	0	0	No, e>t/2
SLV 12	143750	0.53	0	-40	6.68	0	0	No, e>t/2
SLV 5	143750	0.53	0	-40	6.68	0	0	No, e>t/2
SLV 2	143750	0.53	0	3	6.68	0	0	No, Trazione

Verifica dei meccanismi locali di collasso con analisi cinematica lineare

forza di aggancio al piano = 0 quota mezzeria = 13.6 Wa = 0.05 Ta = 0.0573

Comb.	N top	N base	V orto	α0	M*	e*	a0*	aLim	Verifica
SLV 11	-32	-80	-6	0	11.4	0.893	0	8.24559	No
SLV 12	-32	-80	-6	0	11.4	0.893	0	8.24559	No
SLV 5	-27	-114	5	0.006	11	0.896	0.10064	8.24559	No
SLV 6	-27	-114	5	0.006	11	0.896	0.10064	8.24559	No
SLV 8	-28	-87	-5	0.008	11.1	0.896	0.13659	8.24559	No
SLV 7	-28	-87	-5	0.008	11.1	0.896	0.13659	8.24559	No
SLV 16	-36	-81	-4	0.02	11.8	0.89	0.3246	9.07197	No
SLV 15	-36	-81	-4	0.02	11.8	0.89	0.3246	9.07197	No
SLV 10	-31	-107	4	0.025	11.3	0.893	0.40507	8.24559	No
SLV 9	-31	-107	4	0.025	11.3	0.893	0.40507	8.24559	No

Tabella dei coefficienti di sicurezza minimi

Stato limite	Coeff.s.	Comb.	Verifica
PF_SLU	0	SLU 84	No
V_SLU	0	SLU 1	No
PF_SLV	0	SLV 16	No
V_SLV	0	SLV 1	No
PFFP_SLV	0	SLV 4	No
R_SLV	0	SLV 11	No

Maschio 247

Verifiche condotte secondo D.M. 17-01-18 (N.T.C.)

Dati geometrici

X ini.	Y ini.	X fin.	Y fin.	Quota i.	Quota.s	l	Sp.	h netta	h ini.	h fin.	a	a.s.,sx	a.s.,dx
-5.937	-3.169	-6.467	-3.169	L6	L7	0.53	0.28	3.1	3.1	3.1			

Caratteristiche del materiale

(Circolare 7 21-01-19 C8.5.I) Muratura in mattoni pieni e malta di calce LC2_Corti

fb	fk	fvk0	fmedio	τ0	fv0	μ	ϕ	fv,lim	E	G	FC
600000			345000	9000	20000	0.58	0.77	32500	320000000	128000000	1.2

Verifica a pressoflessione nel piano secondo D.M. 17-01-18 NTC §7.8.2.2.1 in combinazioni non sismiche, γM = 3

Comb.	Quota	N	M	σ0	Mu	c.s.	Verifica
SLU 44	14.05	-625	26.12	4207	157.01	6.011	Si
SLU 44	14.85	-443	-81.28	2981	113.02	1.391	Si
SLU 52	14.05	-606	29.08	4082	152.58	5.247	Si
SLU 52	14.85	-440	-82.26	2961	112.28	1.365	Si
SLU 5	14.05	-476	25.77	3206	121.19	4.703	Si
SLU 5	14.85	-345	-68.23	2327	88.95	1.304	Si

Comb.	Quota	N	M	σ0	Mu	c.s.	Verifica
SLU 31	14.05	-454	29.02	3059	115.87	3.992	Si
SLU 31	14.85	-338	-77.9	2274	86.98	1.117	Si
SLU 26	14.05	-502	30.24	3380	127.48	4.215	Si
SLU 26	14.85	-385	-72.61	2591	98.7	1.359	Si
SLU 10	14.05	-428	24.55	2886	109.53	4.462	Si
SLU 10	14.85	-298	-73.52	2010	77.15	1.049	Si
SLU 23	14.05	-473	26.06	3185	120.42	4.621	Si
SLU 23	14.85	-341	-76.92	2294	87.73	1.141	Si
SLU 34	14.05	-483	33.2	3254	122.95	3.703	Si
SLU 34	14.85	-382	-73.59	2570	97.95	1.331	Si
SLU 2	14.05	-447	21.59	3011	114.1	5.286	Si
SLU 2	14.85	-301	-72.54	2030	77.9	1.074	Si
SLU 13	14.05	-457	28.73	3081	116.64	4.06	Si
SLU 13	14.85	-342	-69.21	2307	88.2	1.274	Si

Verifica a pressoflessione nel piano secondo D.M. 17-01-18 NTC §7.8.2.2.1 in combinazioni sismiche, γM = 2

Comb.	Quota	N	M	σ0	Mu	c.s.	Verifica
SLV 7	14.05	-733	-113.19	4936	186.38	1.647	Si
SLV 7	14.85	-424	188.46	0	0	0	No, e>l/2
SLV 6	14.05	-188	226.27	0	0	0	No, e>l/2
SLV 6	14.85	-336	-424.15	0	0	0	No, e>l/2
SLV 8	14.05	-733	-113.19	4936	186.38	1.647	Si
SLV 8	14.85	-424	188.46	0	0	0	No, e>l/2
SLV 5	14.05	-188	226.27	0	0	0	No, e>l/2
SLV 5	14.85	-336	-424.15	0	0	0	No, e>l/2
SLV 9	14.05	-514	157.88	0	0	0	No, e>l/2
SLV 9	14.85	-627	-259.81	0	0	0	No, e>l/2
SLV 10	14.05	-514	157.88	0	0	0	No, e>l/2
SLV 10	14.85	-627	-259.81	0	0	0	No, e>l/2
SLV 4	14.05	-161	85.41	0	0	0	No, e>l/2
SLV 4	14.85	-54	-217.67	0	0	0	No, e>l/2
SLV 2	14.05	2	187.24	0	0	0	No, Trazione
SLV 2	14.85	-28	-401.46	0	0	0	No, e>l/2
SLV 1	14.05	2	187.24	0	0	0	No, Trazione
SLV 1	14.85	-28	-401.46	0	0	0	No, e>l/2
SLV 3	14.05	-161	85.41	0	0	0	No, e>l/2
SLV 3	14.85	-54	-217.67	0	0	0	No, e>l/2

Verifica a taglio nel piano secondo D.M. 17-01-18 (N.T.C.) §7.8.2.2.2 con rottura per scorrimento in combinazioni non sismiche, γM = 3

Comb.	Quota	N	V par	M	σ0	σN	I'	fvd	Vt scorr.	Vt fess.diag.	Vt,lim	c.s.	Verifica
SLU 34	14.05	-483	143	33.2		3254	0.5302	5989	889			6.2	Si
SLU 34	14.85	-382	143	-73.59		6291	0.2166	6394	388			2.72	Si
SLU 2	14.05	-447	124	21.59		3011	0.5302	5957	884			7.14	Si
SLU 2	14.85	-301	123	-72.54		14696	0.0732	7515	154			1.25	Si
SLU 10	14.05	-428	130	24.55		2886	0.5302	5940	882			6.78	Si
SLU 10	14.85	-298	130	-73.52		18994	0.0561	8088	127			0.98	No, Vu<V
SLU 26	14.05	-502	137	30.24		3380	0.5302	6006	892			6.5	Si
SLU 26	14.85	-385	137	-72.61		6003	0.2288	6356	407			2.98	Si
SLU 52	14.05	-606	149	29.08		4082	0.5302	6100	905			6.08	Si
SLU 52	14.85	-440	149	-82.26		6714	0.2338	6451	422			2.84	Si
SLU 23	14.05	-473	136	26.06		3185	0.5302	5980	888			6.52	Si
SLU 23	14.85	-341	136	-76.92		10337	0.1177	6934	228			1.68	Si
SLU 13	14.05	-457	131	28.73		3081	0.5302	5966	886			6.75	Si
SLU 13	14.85	-342	131	-69.21		6475	0.1889	6419	339			2.6	Si
SLU 73	14.05	-632	161	33.55		4256	0.5302	6123	909			5.64	Si
SLU 73	14.85	-479	161	-86.64		6777	0.2523	6459	456			2.84	Si
SLU 31	14.05	-454	142	29.02		3059	0.5302	5963	885			6.22	Si
SLU 31	14.85	-338	142	-77.9		11716	0.1029	7118	205			1.45	Si
SLU 5	14.05	-476	125	25.77		3206	0.5302	5983	888			7.11	Si
SLU 5	14.85	-345	124	-68.23		6087	0.2027	6367	361			2.9	Si

Verifica a taglio nel piano secondo D.M. 17-01-18 (N.T.C.) §7.8.2.2.2 con rottura per scorrimento in combinazioni sismiche, γM = 2

Comb.	Quota	N	V par	M	σ0	σN	I'	fvd	Vt scorr.	Vt fess.diag.	Vt,lim	c.s.	Verifica
SLV 4	14.05	-161	534	85.41		0	0	8333	0			0	No, Vu<V
SLV 4	14.85	-54	468	-217.67		0	0	8333	0			0	No, Vu<V
SLV 2	14.05	2	833	187.24		0	0	8333	0			0	No, Vu<V
SLV 2	14.85	-28	618	-401.46		0	0	8333	0			0	No, Vu<V
SLV 10	14.05	-514	400	157.88		0	0	8333	0			0	No, Vu<V
SLV 10	14.85	-627	194	-259.81		0	0	8333	0			0	No, Vu<V
SLV 3	14.05	-161	534	85.41		0	0	8333	0			0	No, Vu<V
SLV 3	14.85	-54	468	-217.67		0	0	8333	0			0	No, Vu<V
SLV 5	14.05	-188	761	226.27		0	0	8333	0			0	No, Vu<V
SLV 5	14.85	-336	470	-424.15		0	0	8333	0			0	No, Vu<V
SLV 8	14.05	-733	-235	-113.19		7887	0.3318	9911	921			3.91	Si
SLV 8	14.85	-424	-29	188.46		0	0	8333	0			0	No, Vu<V
SLV 9	14.05	-514	400	157.88		0	0	8333	0			0	No, Vu<V
SLV 9	14.85	-627	194	-259.81		0	0	8333	0			0	No, Vu<V
SLV 1	14.05	2	833	187.24		0	0	8333	0			0	No, Vu<V
SLV 1	14.85	-28	618	-401.46		0	0	8333	0			0	No, Vu<V
SLV 7	14.05	-733	-235	-113.19		7887	0.3318	9911	921			3.91	Si
SLV 7	14.85	-424	-29	188.46		0	0	8333	0			0	No, Vu<V
SLV 6	14.05	-188	761	226.27		0	0	8333	0			0	No, Vu<V
SLV 6	14.85	-336	470	-424.15		0	0	8333	0			0	No, Vu<V

Verifica a pressoflessione fuori piano D.M. 17-01-18 (N.T.C.)

quota 13.6 Wa 0.05 denominatore 8 γM = 2

Comb.	fd	Sa	σ0	N	M	Mc	Coeff.s.	Verifica
SLV 15	143750	0.53	0	-48	57.78	0	0	No, e>t/2
SLV 16	143750	0.53	0	-48	57.78	0	0	No, e>t/2

Comb.	fd	Sa	σ0	N	M	Mc	Coeff.s.	Verifica
SLV 11	143750	0.53	0	260	57.78	0	0	No, Trazione
SLV 8	143750	0.53	0	79	57.78	0	0	No, Trazione
SLV 7	143750	0.53	0	79	57.78	0	0	No, Trazione
SLV 12	143750	0.53	0	260	57.78	0	0	No, Trazione
SLV 14	143750	0.53	3325	-494	57.78	67.23	1.16	Si
SLV 13	143750	0.53	3325	-494	57.78	67.23	1.16	Si
SLV 4	143750	0.53	4393	-652	57.78	88.02	1.52	Si
SLV 3	143750	0.53	4393	-652	57.78	88.02	1.52	Si

Verifica dei meccanismi locali di collasso con analisi cinematica lineare

forza di aggancio al piano = 0 quota mezzeria = 13.6 Wa = 0.05 Ta = 0.0573

Comb.	N top	N base	V orto	α0	M*	e*	a0*	aLim	Verifica
SLV 11	-415	-690	-18	0.046	112.7	0.889	0.74502	8.24559	No
SLV 12	-415	-690	-18	0.046	112.7	0.889	0.74502	8.24559	No
SLV 7	-455	-500	-18	0.046	116.3	0.889	0.75708	8.24559	No
SLV 8	-455	-500	-18	0.046	116.3	0.889	0.75708	8.24559	No
SLV 6	-123	-462	13	0.056	89.1	0.919	0.88378	8.24559	No
SLV 5	-123	-462	13	0.056	89.1	0.919	0.88378	8.24559	No
SLV 16	-253	-899	-8	0.061	98.6	0.895	0.98396	9.07197	No
SLV 15	-253	-899	-8	0.061	98.6	0.895	0.98396	9.07197	No
SLV 9	-84	-652	12	0.058	86.9	0.935	0.90283	8.24559	No
SLV 10	-84	-652	12	0.058	86.9	0.935	0.90283	8.24559	No

Tabella dei coefficienti di sicurezza minimi

Stato limite	Coeff.s.	Comb.	Verifica
PF_SLU	1.049	SLU 10	Si
V_SLU	0.981	SLU 10	No
PF_SLV	0	SLV 2	No
V_SLV	0	SLV 1	No
PFFP_SLV	0	SLV 12	No
R_SLV	0.09	SLV 11	No

Maschio 248

Verifiche condotte secondo D.M. 17-01-18 (N.T.C.)

Dati geometrici

X ini.	Y ini.	X fin.	Y fin.	Quota i.	Quota.s	l	Sp.	h netta	h ini.	h fin.	a	a.s.,sx	a.s.,dx
-2.952	-3.169	-5.437	-3.169	L6	L7	2.485	0.28	3.1	3.1	3.1			

Caratteristiche del materiale

(Circolare 7 21-01-19 C8.5.I) Muratura in mattoni pieni e malta di calce LC2_Corti

fb	fk	fvk0	fmedio	τ0	fv0	μ	ϕ	fv,lim	E	G	FC
600000			345000	9000	20000	0.58	0.77	32500	320000000	128000000	1.2

Verifica a pressoflessione nel piano secondo D.M. 17-01-18 NTC §7.8.2.2.1 in combinazioni non sismiche, γM = 3

Comb.	Quota	N	M	σ0	Mu	c.s.	Verifica
SLU 49	14.05	-3376	-93.5	4852	3945.11	42.192	Si
SLU 49	14.85	-2239	-298.51	3218	2672.37	8.952	Si
SLU 48	14.05	-3296	-56.4	4737	3857.31	68.391	Si
SLU 48	14.85	-2159	-283.4	3103	2580.59	9.106	Si
SLU 9	14.05	-2208	-121.93	3173	2636.3	21.621	Si
SLU 9	14.85	-1328	-211.22	1909	1611.49	7.63	Si
SLU 50	14.05	-2751	-57.45	3953	3251.67	56.604	Si
SLU 50	14.85	-1614	-236.42	2319	1947.74	8.238	Si
SLU 72	14.05	-2898	-96.25	4165	3416.47	35.497	Si
SLU 72	14.85	-1742	-215.26	2503	2097.45	9.744	Si
SLU 6	14.05	-2673	-83.78	3842	3164.95	37.776	Si
SLU 6	14.85	-1794	-243.08	2578	2158.09	8.878	Si
SLU 8	14.05	-2128	-84.83	3058	2544.41	29.995	Si
SLU 8	14.85	-1248	-196.11	1794	1516.51	7.733	Si
SLU 7	14.05	-2753	-120.89	3957	3254.93	26.926	Si
SLU 7	14.85	-1874	-258.19	2693	2251.16	8.719	Si
SLU 51	14.05	-2831	-94.55	4068	3341.38	35.34	Si
SLU 51	14.85	-1694	-251.54	2434	2041.44	8.116	Si
SLU 30	14.05	-2275	-123.63	3270	2713.23	21.947	Si
SLU 30	14.85	-1376	-174.94	1978	1668.26	9.536	Si

Verifica a pressoflessione nel piano secondo D.M. 17-01-18 NTC §7.8.2.2.1 in combinazioni sismiche, γM = 2

Comb.	Quota	N	M	σ0	Mu	c.s.	Verifica
SLV 1	14.05	-2587	976.21	3718	3116.36	3.192	Si
SLV 1	14.85	-1672	-780.26	2403	2036.68	2.61	Si
SLV 8	14.05	-1218	400.17	1750	1491.36	3.727	Si
SLV 8	14.85	-817	-205.05	1175	1005.8	4.905	Si
SLV 4	14.05	-2000	999.15	2874	2426.03	2.428	Si
SLV 4	14.85	-1357	-740.26	1950	1658.61	2.241	Si
SLV 14	14.05	-2311	-811.59	3321	2792.92	3.441	Si
SLV 14	14.85	-1183	615.62	1701	1449.78	2.355	Si
SLV 15	14.05	-1723	-788.65	2477	2097.85	2.66	Si
SLV 15	14.85	-868	655.62	1247	1067.2	1.628	Si
SLV 13	14.05	-2311	-811.59	3321	2792.92	3.441	Si
SLV 13	14.85	-1183	615.62	1701	1449.78	2.355	Si
SLV 7	14.05	-1218	400.17	1750	1491.36	3.727	Si
SLV 7	14.85	-817	-205.05	1175	1005.8	4.905	Si
SLV 2	14.05	-2587	976.21	3718	3116.36	3.192	Si
SLV 2	14.85	-1672	-780.26	2403	2036.68	2.61	Si

Comb.	Quota	N	M	σ0	Mu	c.s.	Verifica
SLV 3	14.05	-2000	999.15	2874	2426.03	2.428	Si
SLV 3	14.85	-1357	-740.26	1950	1658.61	2.241	Si
SLV 16	14.05	-1723	-788.65	2477	2097.85	2.66	Si
SLV 16	14.85	-868	655.62	1247	1067.2	1.628	Si

Verifica a taglio nel piano secondo D.M. 17-01-18 (N.T.C.) §7.8.2.2.2 con rottura per scorrimento in combinazioni non sismiche, γM = 3

Comb.	Quota	N	V par	M	σ0	σN	l'	fvd	Vt scorr.	Vt fess.diag.	Vt,lim	c.s.	Verifica
SLU 3	14.05	-2686	199	3.3		3860	2.485	6070	4224			21.24	Si
SLU 3	14.85	-1806	199	-191.5		2596	2.485	5902	4106			20.65	Si
SLU 49	14.05	-3376	198	-93.5		4852	2.485	6203	4316			21.79	Si
SLU 49	14.85	-2239	198	-298.51		3218	2.485	5985	4164			21.02	Si
SLU 43	14.05	-2776	254	116.71		3989	2.485	6087	4236			16.66	Si
SLU 43	14.85	-1639	254	-133.26		2355	2.485	5870	4084			16.06	Si
SLU 66	14.05	-3376	223	28.98		4852	2.485	6202	4316			19.37	Si
SLU 66	14.85	-2220	223	-195.54		3190	2.485	5981	4162			18.67	Si
SLU 64	14.05	-2843	207	115.02		4086	2.485	6100	4245			20.49	Si
SLU 64	14.85	-1687	207	-96.98		2424	2.485	5879	4090			19.74	Si
SLU 48	14.05	-3296	226	-56.4		4737	2.485	6187	4305			19.09	Si
SLU 48	14.85	-2159	226	-283.4		3103	2.485	5969	4153			18.41	Si
SLU 45	14.05	-3309	270	30.68		4755	2.485	6190	4307			15.96	Si
SLU 45	14.85	-2172	270	-231.82		3121	2.485	5972	4155			15.39	Si
SLU 44	14.05	-2909	208	54.88		4181	2.485	6113	4253			20.41	Si
SLU 44	14.85	-1772	208	-158.44		2547	2.485	5895	4102			19.68	Si
SLU 53	14.05	-3249	203	47.93		4670	2.485	6178	4299			21.19	Si
SLU 53	14.85	-2112	203	-160.93		3036	2.485	5960	4147			20.44	Si
SLU 46	14.05	-3389	242	-6.42		4870	2.485	6205	4317			17.81	Si
SLU 46	14.85	-2252	242	-246.93		3236	2.485	5987	4166			17.18	Si

Verifica a taglio nel piano secondo D.M. 17-01-18 (N.T.C.) §7.8.2.2.2 con rottura per scorrimento in combinazioni sismiche, γM = 2

Comb.	Quota	N	V par	M	σ0	σN	l'	fvd	Vt scorr.	Vt fess.diag.	Vt,lim	c.s.	Verifica
SLV 4	14.05	-2000	2108	999.15		3205	2.2285	8974	5600			2.66	Si
SLV 4	14.85	-1357	918	-740.26		2318	2.0904	8797	5149			5.61	Si
SLV 7	14.05	-1218	815	400.17		1750	2.485	8683	6042			7.41	Si
SLV 7	14.85	-817	71	-205.05		1175	2.485	8568	5962			83.79	Si
SLV 14	14.05	-2311	-1807	-811.59		3321	2.485	8997	6260			3.47	Si
SLV 14	14.85	-1183	-617	615.62		1950	2.1667	8723	5292			8.58	Si
SLV 15	14.05	-1723	-1756	-788.65		2614	2.3546	8856	5839			3.33	Si
SLV 15	14.85	-868	-821	655.62		2121	1.4609	8758	3582			4.37	Si
SLV 13	14.05	-2311	-1807	-811.59		3321	2.485	8997	6260			3.47	Si
SLV 13	14.85	-1183	-617	615.62		1950	2.1667	8723	5292			8.58	Si
SLV 3	14.05	-2000	2108	999.15		3205	2.2285	8974	5600			2.66	Si
SLV 3	14.85	-1357	918	-740.26		2318	2.0904	8797	5149			5.61	Si
SLV 8	14.05	-1218	815	400.17		1750	2.485	8683	6042			7.41	Si
SLV 8	14.85	-817	71	-205.05		1175	2.485	8568	5962			83.79	Si
SLV 1	14.05	-2587	2057	976.21		3718	2.485	9077	6316			3.07	Si
SLV 1	14.85	-1672	1122	-780.26		2566	2.3276	8846	5765			5.14	Si
SLV 2	14.05	-2587	2057	976.21		3718	2.485	9077	6316			3.07	Si
SLV 2	14.85	-1672	1122	-780.26		2566	2.3276	8846	5765			5.14	Si
SLV 16	14.05	-1723	-1756	-788.65		2614	2.3546	8856	5839			3.33	Si
SLV 16	14.85	-868	-821	655.62		2121	1.4609	8758	3582			4.37	Si

Verifica a pressoflessione fuori piano D.M. 17-01-18 (N.T.C.)

quota 13.6 Wa 0.05 denominatore 8 γM = 2

Comb.	fd	Sa	σ0	N	M	Mc	Coeff.s.	Verifica
SLV 7	143750	0.53	0	-1772	270.84	0	0	No, e>t/2
SLV 3	143750	0.53	0	-1791	270.84	0	0	No, e>t/2
SLV 4	143750	0.53	0	-1791	270.84	0	0	No, e>t/2
SLV 8	143750	0.53	0	-1772	270.84	0	0	No, e>t/2
SLV 12	143750	0.53	3076	-2140	270.84	292.1	1.08	Si
SLV 11	143750	0.53	3076	-2140	270.84	292.1	1.08	Si
SLV 2	143750	0.53	3129	-2177	270.84	297	1.1	Si
SLV 1	143750	0.53	3129	-2177	270.84	297	1.1	Si
SLV 16	143750	0.53	4341	-3021	270.84	407.86	1.51	Si
SLV 15	143750	0.53	4341	-3021	270.84	407.86	1.51	Si

Verifica dei meccanismi locali di collasso con analisi cinematica lineare

forza di aggancio al piano = 0 quota mezzeria = 13.6 Wa = 0.05 Ta = 0.0573

Comb.	N top	N base	V orto	α0	M*	e*	a0*	aLim	Verifica
SLV 8	-532	-2577	83	0.047	415	0.922	0.74445	8.24559	No
SLV 7	-532	-2577	83	0.047	415	0.922	0.74445	8.24559	No
SLV 10	-1038	-4998	-85	0.046	450.5	0.898	0.7478	8.24559	No
SLV 9	-1038	-4998	-85	0.046	450.5	0.898	0.7478	8.24559	No
SLV 6	-1058	-4928	-74	0.05	452	0.898	0.80252	8.24559	No
SLV 5	-1058	-4928	-74	0.05	452	0.898	0.80252	8.24559	No
SLV 11	-512	-2647	72	0.051	413.8	0.924	0.8081	8.24559	No
SLV 12	-512	-2647	72	0.051	413.8	0.924	0.8081	8.24559	No
SLV 13	-831	-4258	-41	0.062	434.9	0.905	0.99352	9.07197	No
SLV 14	-831	-4258	-41	0.062	434.9	0.905	0.99352	9.07197	No

Tabella dei coefficienti di sicurezza minimi

Stato limite	Coeff.s.	Comb.	Verifica
PF_SLU	7.63	SLU 9	Si
V_SLU	15.394	SLU 45	Si
PF_SLV	1.628	SLV 15	Si
V_SLV	2.657	SLV 3	Si
PFFP_SLV	0	SLV 3	No
R_SLV	0.09	SLV 7	No

Maschio 249

Verifiche condotte secondo D.M. 17-01-18 (N.T.C.)

Dati geometrici

X ini.	Y ini.	X fin.	Y fin.	Quota i.	Quota.s	l	Sp.	h netta	h ini.	h fin.	a	a.s.,sx	a.s.,dx
-0.117	-3.169	-1.952	-3.169	L6	L7	1.835	0.28	3.1	3.1	3.1			

Caratteristiche del materiale

(Circolare 7 21-01-19 C8.5.I) Muratura in mattoni pieni e malta di calce LC2_Corti

fb	fk	fvk0	fmedio	τ0	fv0	μ	ϕ	fv,lim	E	G	FC
600000			345000	9000	20000	0.58	0.77	32500	320000000	128000000	1.2

Verifica a pressoflessione nel piano secondo D.M. 17-01-18 NTC §7.8.2.2.1 in combinazioni non sismiche, γM = 3

Comb.	Quota	N	M	σ0	Mu	c.s.	Verifica
SLU 18	12.95	-3331	-734.57	6484	2813.18	3.83	Si
SLU 18	14.85	-2343	256.71	4560	2029.48	7.906	Si
SLU 39	12.95	-3499	-926.41	6810	2941.86	3.176	Si
SLU 39	14.85	-2675	285.2	5207	2297.8	8.057	Si
SLU 31	12.95	-3583	-764.92	6973	3005.91	3.93	Si
SLU 31	14.85	-2493	386.31	4852	2150.99	5.568	Si
SLU 41	12.95	-3956	-958.49	7699	3286.39	3.429	Si
SLU 41	14.85	-3264	381.04	6353	2761.39	7.247	Si
SLU 19	12.95	-3359	-696.35	6538	2834.53	4.071	Si
SLU 19	14.85	-2257	313.36	4393	1959.19	6.252	Si
SLU 42	12.95	-3983	-920.27	7753	3306.98	3.593	Si
SLU 42	14.85	-3178	437.68	6186	2694.57	6.156	Si
SLU 81	12.95	-4479	-983.22	8717	3669.48	3.732	Si
SLU 81	14.85	-3225	359.16	6277	2731.22	7.605	Si
SLU 83	12.95	-4936	-1015.3	9606	3994.38	3.934	Si
SLU 83	14.85	-3814	455	7424	3180.61	6.99	Si
SLU 82	12.95	-4506	-945	8771	3689.43	3.904	Si
SLU 82	14.85	-3139	415.8	6110	2664.26	6.408	Si
SLU 40	12.95	-3527	-888.19	6864	2963	3.336	Si
SLU 40	14.85	-2589	341.84	5040	2228.76	6.52	Si

Verifica a pressoflessione nel piano secondo D.M. 17-01-18 NTC §7.8.2.2.1 in combinazioni sismiche, γM = 2

Comb.	Quota	N	M	σ0	Mu	c.s.	Verifica
SLV 9	12.95	-5437	-804.76	10581	4556.21	5.662	Si
SLV 9	14.85	-2321	55.35	4518	2051.01	37.053	Si
SLV 15	12.95	-2764	-1402.69	5379	2424.19	1.728	Si
SLV 15	14.85	-3131	602.18	6093	2729.08	4.532	Si
SLV 11	12.95	-1452	-779.21	2827	1301.78	1.671	Si
SLV 11	14.85	-2783	648.42	5416	2440.15	3.763	Si
SLV 12	12.95	-1452	-779.21	2827	1301.78	1.671	Si
SLV 12	14.85	-2783	648.42	5416	2440.15	3.763	Si
SLV 14	12.95	-3959	-1410.35	7706	3403.42	2.413	Si
SLV 14	14.85	-2992	424.26	5823	2614.4	6.162	Si
SLV 7	12.95	-1524	-252.47	2965	1364.02	5.403	Si
SLV 7	14.85	-2346	510.13	4567	2072.39	4.062	Si
SLV 8	12.95	-1524	-252.47	2965	1364.02	5.403	Si
SLV 8	14.85	-2346	510.13	4567	2072.39	4.062	Si
SLV 10	12.95	-5437	-804.76	10581	4556.21	5.662	Si
SLV 10	14.85	-2321	55.35	4518	2051.01	37.053	Si
SLV 13	12.95	-3959	-1410.35	7706	3403.42	2.413	Si
SLV 13	14.85	-2992	424.26	5823	2614.4	6.162	Si
SLV 16	12.95	-2764	-1402.69	5379	2424.19	1.728	Si
SLV 16	14.85	-3131	602.18	6093	2729.08	4.532	Si

Verifica a taglio nel piano secondo D.M. 17-01-18 (N.T.C.) §7.8.2.2.2 con rottura per scorrimento in combinazioni non sismiche, γM = 3

Comb.	Quota	N	V par	M	σ0	σN	l'	fvd	Vt scorr.	Vt fess.diag.	Vt,lim	c.s.	Verifica
SLU 78	12.95	-5680	-1441	-883.04		11055	1.835	7029	3612			2.51	Si
SLU 78	14.85	-4570	-1400	678.88		8895	1.835	6742	3464			2.47	Si
SLU 74	12.95	-5195	-1343	-889.18		10111	1.835	6904	3547			2.64	Si
SLU 74	14.85	-4067	-1334	526.4		7916	1.835	6611	3397			2.55	Si
SLU 79	12.95	-5430	-1421	-949.6		10569	1.835	6965	3578			2.52	Si
SLU 79	14.85	-4364	-1408	557.55		8493	1.835	6688	3436			2.44	Si
SLU 37	12.95	-4451	-1303	-892.79		8662	1.835	6710	3448			2.65	Si
SLU 37	14.85	-3814	-1291	483.59		7423	1.835	6545	3363			2.6	Si
SLU 36	12.95	-4700	-1323	-826.23		9148	1.835	6775	3481			2.63	Si
SLU 36	14.85	-4020	-1283	604.93		7825	1.835	6599	3390			2.64	Si
SLU 35	12.95	-4672	-1356	-864.45		9094	1.835	6768	3477			2.56	Si
SLU 35	14.85	-4106	-1345	548.28		7992	1.835	6621	3402			2.53	Si
SLU 80	12.95	-5458	-1388	-911.38		10623	1.835	6972	3582			2.58	Si
SLU 80	14.85	-4278	-1347	614.19		8326	1.835	6666	3425			2.54	Si
SLU 84	12.95	-4963	-1342	-977.08		9660	1.835	6844	3516			2.62	Si
SLU 84	14.85	-3728	-1304	511.64		7256	1.835	6523	3352			2.57	Si
SLU 83	12.95	-4936	-1375	-1015.3		9606	1.835	6836	3513			2.55	Si
SLU 83	14.85	-3814	-1365	455		7424	1.835	6545	3363			2.46	Si
SLU 77	12.95	-5652	-1474	-921.27		11001	1.835	7022	3608			2.45	Si
SLU 77	14.85	-4656	-1462	622.24		9062	1.835	6764	3475			2.38	Si

Verifica a taglio nel piano secondo D.M. 17-01-18 (N.T.C.) §7.8.2.2.2 con rottura per scorrimento in combinazioni sismiche, γM = 2

Comb.	Quota	N	V par	M	σ0	σN	l'	fvd	Vt scorr.	Vt fess.diag.	Vt,lim	c.s.	Verifica
SLV 15	12.95	-2764	-2374	-1402.69		8025	1.23	9938	3423			1.44	Si
SLV 15	14.85	-3131	-1320	602.18		6093	1.835	9552	4908			3.72	Si
SLV 12	12.95	-1452	-2243	-779.21		4538	1.143	9241	2958			1.32	Si
SLV 12	14.85	-2783	-1865	648.42		5416	1.835	9417	4838			2.59	Si
SLV 7	12.95	-1524	-1467	-252.47		2965	1.835	8926	4586			3.13	Si

Comb.	Quota	N	V par	M	σ0	σN	l'	fvd	Vt scorr.	Vt fess.diag.	Vt,lim	c.s.	Verifica
SLV 7	14.85	-2346	-1707	510.13		4567	1.835	9247	4751			2.78	Si
SLV 14	12.95	-3959	-1711	-1410.35		8397	1.6838	10013	4721			2.76	Si
SLV 14	14.85	-2992	-695	424.26		5823	1.835	9498	4880			7.02	Si
SLV 8	12.95	-1524	-1467	-252.47		2965	1.835	8926	4586			3.13	Si
SLV 8	14.85	-2346	-1707	510.13		4567	1.835	9247	4751			2.78	Si
SLV 11	12.95	-1452	-2243	-779.21		4538	1.143	9241	2958			1.32	Si
SLV 11	14.85	-2783	-1865	648.42		5416	1.835	9417	4838			2.59	Si
SLV 4	12.95	-3001	212	353.12		5841	1.835	9502	4882			22.98	Si
SLV 4	14.85	-1676	-793	141.23		3261	1.835	8986	4617			5.82	Si
SLV 13	12.95	-3959	-1711	-1410.35		8397	1.6838	10013	4721			2.76	Si
SLV 13	14.85	-2992	-695	424.26		5823	1.835	9498	4880			7.02	Si
SLV 3	12.95	-3001	212	353.12		5841	1.835	9502	4882			22.98	Si
SLV 3	14.85	-1676	-793	141.23		3261	1.835	8986	4617			5.82	Si
SLV 16	12.95	-2764	-2374	-1402.69		8025	1.23	9938	3423			1.44	Si
SLV 16	14.85	-3131	-1320	602.18		6093	1.835	9552	4908			3.72	Si

Verifica a pressoflessione fuori piano D.M. 17-01-18 (N.T.C.)

quota 13.6 Wa 0.05 denominatore 8 γM = 2

Comb.	fd	Sa	σ0	N	M	Mc	Coeff.s.	Verifica
SLV 7	143750	0.53	3421	-1758	200	239.21	1.2	Si
SLV 8	143750	0.53	3421	-1758	200	239.21	1.2	Si
SLV 11	143750	0.53	3434	-1765	200	240.09	1.2	Si
SLV 12	143750	0.53	3434	-1765	200	240.09	1.2	Si
SLV 4	143750	0.53	5116	-2629	200	352.59	1.76	Si
SLV 3	143750	0.53	5116	-2629	200	352.59	1.76	Si
SLV 16	143750	0.53	5159	-2651	200	355.45	1.78	Si
SLV 15	143750	0.53	5159	-2651	200	355.45	1.78	Si
SLV 1	143750	0.53	6582	-3382	200	447.92	2.24	Si
SLV 2	143750	0.53	6582	-3382	200	447.92	2.24	Si

Verifica dei meccanismi locali di collasso con analisi cinematica lineare

forza di aggancio al piano = 0 quota mezzeria = 13.6 Wa = 0.05 Ta = 0.0573

Comb.	N top	N base	V orto	α0	M*	e*	a0*	aLim	Verifica
SLV 5	-875	-5782	-81	0.038	341.2	0.895	0.61758	8.24559	No
SLV 6	-875	-5782	-81	0.038	341.2	0.895	0.61758	8.24559	No
SLV 9	-1034	-6451	-79	0.04	354.5	0.891	0.64479	8.24559	No
SLV 10	-1034	-6451	-79	0.04	354.5	0.891	0.64479	8.24559	No
SLV 1	-1254	-3643	-51	0.05	373.6	0.889	0.81953	9.07197	No
SLV 2	-1254	-3643	-51	0.05	373.6	0.889	0.81953	9.07197	No
SLV 13	-1786	-5871	-43	0.052	422.2	0.89	0.84998	9.07197	No
SLV 14	-1786	-5871	-43	0.052	422.2	0.89	0.84998	9.07197	No
SLV 4	-1738	-2477	-23	0.058	417.7	0.89	0.95213	9.07197	No
SLV 3	-1738	-2477	-23	0.058	417.7	0.89	0.95213	9.07197	No

Tabella dei coefficienti di sicurezza minimi

Stato limite	Coeff.s.	Comb.	Verifica
PF_SLU	3.176	SLU 39	Si
V_SLU	2.377	SLU 77	Si
PF_SLV	1.671	SLV 11	Si
V_SLV	1.318	SLV 11	Si
PFFP_SLV	1.196	SLV 7	Si
R_SLV	0.075	SLV 5	No

Maschio 250

Verifiche condotte secondo D.M. 17-01-18 (N.T.C.)

Dati geometrici

X ini.	Y ini.	X fin.	Y fin.	Quota i.	Quota.s	l	Sp.	h netta	h ini.	h fin.	a	a.s.,sx	a.s.,dx
-2.958	5.948	-5.088	5.948	L6	L7	2.13	0.28	3.1	3.1	3.1			

Caratteristiche del materiale

(Circolare 7 21-01-19 C8.5.I) Muratura in mattoni pieni e malta di calce LC2_Corti

fb	fk	fvk0	fmedio	τ0	fv0	μ	ϕ	fv,lim	E	G	FC
600000			345000	9000	20000	0.58	0.77	32500	320000000	128000000	1.2

Verifica a pressoflessione nel piano secondo D.M. 17-01-18 NTC §7.8.2.2.1 in combinazioni non sismiche, γM = 3

Comb.	Quota	N	M	σ0	Mu	c.s.	Verifica
SLU 40	12.95	-4409	-150.82	7393	4269.82	28.31	Si
SLU 40	14.85	-1873	566.5	3141	1918.33	3.386	Si
SLU 80	12.95	-6818	-141.67	11432	6242.02	44.061	Si
SLU 80	14.85	-3215	937.34	5391	3197.45	3.411	Si
SLU 37	12.95	-5673	-92.09	9513	5336.66	57.952	Si
SLU 37	14.85	-2778	859.53	4658	2789.27	3.245	Si
SLU 17	12.95	-5374	-95.84	9011	5090.13	53.112	Si
SLU 17	14.85	-2568	767.06	4306	2590.62	3.377	Si
SLU 41	12.95	-5033	-111.33	8440	4805.17	43.161	Si
SLU 41	14.85	-2320	725.36	3891	2353.12	3.244	Si
SLU 34	12.95	-5051	-144.53	8469	4820.04	33.349	Si
SLU 34	14.85	-2332	706.33	3909	2364.01	3.347	Si
SLU 38	12.95	-5676	-111.52	9517	5338.43	47.869	Si
SLU 38	14.85	-2779	868.02	4659	2790.1	3.214	Si
SLU 16	12.95	-5372	-76.4	9007	5088.32	66.597	Si
SLU 16	14.85	-2567	758.57	4305	2589.78	3.414	Si
SLU 21	12.95	-4734	-115.08	7937	4550.23	39.539	Si
SLU 21	14.85	-2111	632.89	3539	2150.27	3.398	Si

Comb.	Quota	N	M	σ0	Mu	c.s.	Verifica
SLU 42	12.95	-5036	-130.76	8443	4807.01	36.761	Si
SLU 42	14.85	-2321	733.85	3892	2353.98	3.208	Si

Verifica a pressoflessione nel piano secondo D.M. 17-01-18 NTC §7.8.2.2.1 in combinazioni sismiche, γM = 2

Comb.	Quota	N	M	σ0	Mu	c.s.	Verifica
SLV 12	12.95	-7871	-978.31	13197	7477.05	7.643	Si
SLV 12	14.85	-1947	2073.62	0	0	0	No, e>l/2
SLV 16	12.95	-7661	-998.58	12846	7301.45	7.312	Si
SLV 16	14.85	-1954	2295.23	0	0	0	No, e>l/2
SLV 14	12.95	-5939	-607.53	9958	5809.54	9.563	Si
SLV 14	14.85	-1864	1565.43	3126	1934.53	1.236	Si
SLV 11	12.95	-7871	-978.31	13197	7477.05	7.643	Si
SLV 11	14.85	-1947	2073.62	0	0	0	No, e>l/2
SLV 15	12.95	-7661	-998.58	12846	7301.45	7.312	Si
SLV 15	14.85	-1954	2295.23	0	0	0	No, e>l/2
SLV 13	12.95	-5939	-607.53	9958	5809.54	9.563	Si
SLV 13	14.85	-1864	1565.43	3126	1934.53	1.236	Si
SLV 5	12.95	-587	733.6	0	0	0	No, e>l/2
SLV 5	14.85	-1550	-1278.81	2599	1615.96	1.264	Si
SLV 6	12.95	-587	733.6	0	0	0	No, e>l/2
SLV 6	14.85	-1550	-1278.81	2599	1615.96	1.264	Si
SLV 2	12.95	-797	753.87	1336	839.25	1.113	Si
SLV 2	14.85	-1543	-1500.43	2587	1608.34	1.072	Si
SLV 1	12.95	-797	753.87	1336	839.25	1.113	Si
SLV 1	14.85	-1543	-1500.43	2587	1608.34	1.072	Si

Verifica a taglio nel piano secondo D.M. 17-01-18 (N.T.C.) §7.8.2.2.2 con rottura per scorrimento in combinazioni non sismiche, γM = 3

Comb.	Quota	N	V par	M	σ0	σN	l'	fvd	Vt scorr.	Vt fess.diag.	Vt,lim	c.s.	Verifica
SLU 77	12.95	-7129	-971	-194.31		11954	2.13	7149	4264			4.39	Si
SLU 77	14.85	-3610	-945	790.11		6053	2.13	6363	3795			4.02	Si
SLU 71	12.95	-6848	-1024	-124.13		11483	2.13	7087	4226			4.13	Si
SLU 71	14.85	-3237	-1000	851.42		5428	2.13	6279	3745			3.74	Si
SLU 58	12.95	-6514	-961	-106.55		10922	2.13	7012	4182			4.35	Si
SLU 58	14.85	-3004	-938	827.89		5036	2.13	6227	3714			3.96	Si
SLU 78	12.95	-7131	-986	-213.75		11957	2.13	7150	4264			4.32	Si
SLU 78	14.85	-3611	-960	798.6		6054	2.13	6363	3795			3.95	Si
SLU 59	12.95	-6516	-976	-125.98		10926	2.13	7012	4182			4.29	Si
SLU 59	14.85	-3005	-953	836.38		5038	2.13	6227	3714			3.9	Si
SLU 38	12.95	-5676	-965	-111.52		9517	2.13	6824	4070			4.22	Si
SLU 38	14.85	-2779	-942	868.02		4659	2.13	6177	3684			3.91	Si
SLU 37	12.95	-5673	-950	-92.09		9513	2.13	6824	4070			4.29	Si
SLU 37	14.85	-2778	-927	859.53		4658	2.13	6177	3684			3.98	Si
SLU 72	12.95	-6850	-1039	-143.57		11486	2.13	7087	4227			4.07	Si
SLU 72	14.85	-3238	-1016	859.92		5429	2.13	6279	3745			3.69	Si
SLU 80	12.95	-6818	-1070	-141.67		11432	2.13	7080	4222			3.95	Si
SLU 80	14.85	-3215	-1044	937.34		5391	2.13	6274	3742			3.58	Si
SLU 79	12.95	-6816	-1055	-122.24		11428	2.13	7079	4222			4	Si
SLU 79	14.85	-3214	-1029	928.85		5389	2.13	6274	3742			3.64	Si

Verifica a taglio nel piano secondo D.M. 17-01-18 (N.T.C.) §7.8.2.2.2 con rottura per scorrimento in combinazioni sismiche, γM = 2

Comb.	Quota	N	V par	M	σ0	σN	l'	fvd	Vt scorr.	Vt fess.diag.	Vt,lim	c.s.	Verifica
SLV 5	12.95	-587	2649	733.6		0	0	8333	0			0	No, Vu<V
SLV 5	14.85	-1550	2656	-1278.81		7686	0.7204	9871	1991			0.75	No, Vu<V
SLV 7	12.95	-6328	-1837	-569.89		10610	2.13	10455	6236			3.4	Si
SLV 7	14.85	-1850	-2667	1153.86		4990	1.3241	9331	3460			1.3	Si
SLV 11	12.95	-7871	-3639	-978.31		13197	2.13	10973	6544			1.8	Si
SLV 11	14.85	-1947	-3616	2073.62		0	0	8333	0			0	No, Vu<V
SLV 2	12.95	-797	3181	753.87		7984	0.3564	9930	991			0.31	No, Vu<V
SLV 2	14.85	-1543	1899	-1500.43		19858	0.2775	12305	956			0.5	No, Vu<V
SLV 1	12.95	-797	3181	753.87		7984	0.3564	9930	991			0.31	No, Vu<V
SLV 1	14.85	-1543	1899	-1500.43		19858	0.2775	12305	956			0.5	No, Vu<V
SLV 12	12.95	-7871	-3639	-978.31		13197	2.13	10973	6544			1.8	Si
SLV 12	14.85	-1947	-3616	2073.62		0	0	8333	0			0	No, Vu<V
SLV 8	12.95	-6328	-1837	-569.89		10610	2.13	10455	6236			3.4	Si
SLV 8	14.85	-1850	-2667	1153.86		4990	1.3241	9331	3460			1.3	Si
SLV 6	12.95	-587	2649	733.6		0	0	8333	0			0	No, Vu<V
SLV 6	14.85	-1550	2656	-1278.81		7686	0.7204	9871	1991			0.75	No, Vu<V
SLV 16	12.95	-7661	-4171	-998.58		12846	2.13	10902	6502			1.56	Si
SLV 16	14.85	-1954	-2859	2295.23		0	0	8333	0			0	No, Vu<V
SLV 15	12.95	-7661	-4171	-998.58		12846	2.13	10902	6502			1.56	Si
SLV 15	14.85	-1954	-2859	2295.23		0	0	8333	0			0	No, Vu<V

Verifica a pressoflessione fuori piano D.M. 17-01-18 (N.T.C.)

quota 13.6 Wa 0.05 denominatore 8 γM = 2

Comb.	fd	Sa	σ0	N	M	Mc	Coeff.s.	Verifica
SLV 5	143750	0.53	0	-261	232.15	0	0	No, e>t/2
SLV 2	143750	0.53	0	-830	232.15	0	0	No, e>t/2
SLV 1	143750	0.53	0	-830	232.15	0	0	No, e>t/2
SLV 9	143750	0.53	0	-1314	232.15	0	0	No, e>t/2
SLV 10	143750	0.53	0	-1314	232.15	0	0	No, e>t/2
SLV 6	143750	0.53	0	-261	232.15	0	0	No, e>t/2
SLV 4	143750	0.53	3976	-2371	232.15	321.15	1.38	Si
SLV 3	143750	0.53	3976	-2371	232.15	321.15	1.38	Si
SLV 14	143750	0.53	7279	-4341	232.15	571.56	2.46	Si
SLV 13	143750	0.53	7279	-4341	232.15	571.56	2.46	Si

Verifica dei meccanismi locali di collasso con analisi cinematica lineare

forza di aggancio al piano = 0 quota mezzeria = 13.6 Wa = 0.05 Ta = 0.0573

Comb.	N top	N base	V orto	α0	M*	e*	a0*	aLim	Verifica

Comb.	N top	N base	V orto	α0	M*	e*	a0*	aLim	Verifica
SLV 11	397	-7731	46	0	0	0	0	8.24559	No, Trazione
SLV 8	708	-6592	-4	0	0	0	0	8.24559	No, Trazione
SLV 3	427	-3509	-80	0	0	0	0	9.07197	No, Trazione
SLV 7	708	-6592	-4	0	0	0	0	8.24559	No, Trazione
SLV 4	427	-3509	-80	0	0	0	0	9.07197	No, Trazione
SLV 12	397	-7731	46	0	0	0	0	8.24559	No, Trazione
SLV 2	-126	-2004	-96	0.033	340.9	0.968	0.50185	9.07197	No
SLV 1	-126	-2004	-96	0.033	340.9	0.968	0.50185	9.07197	No
SLV 16	-611	-7303	86	0.04	365.6	0.911	0.64151	9.07197	No
SLV 15	-611	-7303	86	0.04	365.6	0.911	0.64151	9.07197	No

Tabella dei coefficienti di sicurezza minimi

Stato limite	Coeff.s.	Comb.	Verifica
PF_SLU	3.208	SLU 42	Si
V_SLU	3.583	SLU 80	Si
PF_SLV	0	SLV 5	No
V_SLV	0	SLV 5	No
PFFP_SLV	0	SLV 1	No
R_SLV	0	SLV 12	No

Maschio 251

Verifiche condotte secondo D.M. 17-01-18 (N.T.C.)

Dati geometrici

X ini.	Y ini.	X fin.	Y fin.	Quota i.	Quota.s	l	Sp.	h netta	h ini.	h fin.	a	a.s.,sx	a.s.,dx
-0.117	5.948	-1.958	5.948	L6	L7	1.84	0.28	3.1	3.1	3.1			

Caratteristiche del materiale

(Circolare 7 21-01-19 C8.5.I) Muratura in mattoni pieni e malta di calce LC2_Corti

fb	fk	fvk0	fmedio	τ0	fv0	μ	ϕ	fv,lim	E	G	FC
600000			345000	9000	20000	0.58	0.77	32500	320000000	128000000	1.2

Verifica a pressoflessione nel piano secondo D.M. 17-01-18 NTC §7.8.2.2.1 in combinazioni non sismiche, γM = 3

Comb.	Quota	N	M	σ0	Mu	c.s.	Verifica
SLU 82	12.95	-4367	-924.92	8475	3600.53	3.893	Si
SLU 82	14.85	-3185	526.75	6181	2708.65	5.142	Si
SLU 42	12.95	-3860	-911.9	7490	3225.15	3.537	Si
SLU 42	14.85	-3224	590.92	6257	2739.18	4.635	Si
SLU 49	12.95	-5584	-500.92	10835	4454.54	8.893	Si
SLU 49	14.85	-4275	907.25	8295	3532.9	3.894	Si
SLU 39	12.95	-3398	-856.48	6594	2873.67	3.355	Si
SLU 39	14.85	-2630	417.13	5104	2268.57	5.439	Si
SLU 40	12.95	-3389	-871.79	6577	2866.77	3.288	Si
SLU 40	14.85	-2635	424.18	5113	2272.28	5.357	Si
SLU 31	12.95	-3436	-793.66	6668	2903.06	3.658	Si
SLU 31	14.85	-2608	438.6	5060	2250.52	5.131	Si
SLU 7	12.95	-4605	-447.79	8937	3772.95	8.426	Si
SLU 7	14.85	-3724	804.68	7227	3122.83	3.881	Si
SLU 9	12.95	-4361	-477.94	8462	3595.81	7.524	Si
SLU 9	14.85	-3390	739.85	6578	2867.25	3.875	Si
SLU 41	12.95	-3869	-896.59	7508	3231.87	3.605	Si
SLU 41	14.85	-3220	583.87	6248	2735.59	4.685	Si
SLU 51	12.95	-5339	-531.07	10360	4287.9	8.074	Si
SLU 51	14.85	-3940	842.42	7646	3285.39	3.9	Si

Verifica a pressoflessione nel piano secondo D.M. 17-01-18 NTC §7.8.2.2.1 in combinazioni sismiche, γM = 2

Comb.	Quota	N	M	σ0	Mu	c.s.	Verifica
SLV 14	12.95	-3094	-1444.14	6004	2707.24	1.875	Si
SLV 14	14.85	-3120	959.27	6054	2728.41	2.844	Si
SLV 13	12.95	-3094	-1444.14	6004	2707.24	1.875	Si
SLV 13	14.85	-3120	959.27	6054	2728.41	2.844	Si
SLV 6	12.95	-2340	811.99	4542	2073.54	2.554	Si
SLV 6	14.85	-1091	310.62	2117	986.67	3.176	Si
SLV 16	12.95	-3753	-2005.14	7282	3247.37	1.62	Si
SLV 16	14.85	-3663	921.25	7108	3174.4	3.446	Si
SLV 11	12.95	-4529	-1797.21	8789	3867.73	2.152	Si
SLV 11	14.85	-3545	503.73	6880	3078.81	6.112	Si
SLV 15	12.95	-3753	-2005.14	7282	3247.37	1.62	Si
SLV 15	14.85	-3663	921.25	7108	3174.4	3.446	Si
SLV 5	12.95	-2340	811.99	4542	2073.54	2.554	Si
SLV 5	14.85	-1091	310.62	2117	986.67	3.176	Si
SLV 10	12.95	-2334	72.77	4529	2067.78	28.414	Si
SLV 10	14.85	-1735	630.47	3367	1552.43	2.462	Si
SLV 9	12.95	-2334	72.77	4529	2067.78	28.414	Si
SLV 9	14.85	-1735	630.47	3367	1552.43	2.462	Si
SLV 12	12.95	-4529	-1797.21	8789	3867.73	2.152	Si
SLV 12	14.85	-3545	503.73	6880	3078.81	6.112	Si

Verifica a taglio nel piano secondo D.M. 17-01-18 (N.T.C.) §7.8.2.2.2 con rottura per scorrimento in combinazioni non sismiche, γM = 3

Comb.	Quota	N	V par	M	σ0	σN	l'	fvd	Vt scorr.	Vt fess.diag.	Vt,lim	c.s.	Verifica
SLU 83	12.95	-4847	-1488	-949.73		9406	1.8404	6810	3509			2.36	Si
SLU 83	14.85	-3770	-1471	686.44		7317	1.8404	6531	3366			2.29	Si
SLU 79	12.95	-5371	-1574	-901.5		10422	1.8404	6945	3579			2.27	Si
SLU 79	14.85	-4330	-1551	862.91		8403	1.8404	6676	3440			2.22	Si
SLU 75	12.95	-5136	-1488	-846.55		9966	1.8404	6884	3548			2.38	Si

Comb.	Quota	N	V par	M	σ0	σN	l'	fvd	Vt scorr.	Vt fess.diag.	Vt,lim	c.s.	Verifica
SLU 75	14.85	-4079	-1470	768.05		7916	1.8404	6611	3407			2.32	Si
SLU 77	12.95	-5615	-1635	-871.35		10897	1.8404	7009	3612			2.21	Si
SLU 77	14.85	-4664	-1614	927.74		9052	1.8404	6762	3485			2.16	Si
SLU 78	12.95	-5607	-1655	-886.66		10880	1.8404	7006	3610			2.18	Si
SLU 78	14.85	-4669	-1631	934.79		9061	1.8404	6764	3485			2.14	Si
SLU 80	12.95	-5362	-1593	-916.81		10405	1.8404	6943	3578			2.25	Si
SLU 80	14.85	-4335	-1569	869.96		8412	1.8404	6677	3441			2.19	Si
SLU 84	12.95	-4838	-1508	-965.04		9388	1.8404	6807	3508			2.33	Si
SLU 84	14.85	-3775	-1489	693.5		7326	1.8404	6532	3366			2.26	Si
SLU 38	12.95	-4384	-1460	-863.68		8507	1.8404	6690	3447			2.36	Si
SLU 38	14.85	-3784	-1438	767.39		7343	1.8404	6535	3367			2.34	Si
SLU 36	12.95	-4628	-1521	-833.53		8982	1.8404	6753	3480			2.29	Si
SLU 36	14.85	-4118	-1500	832.22		7992	1.8404	6621	3412			2.27	Si
SLU 35	12.95	-4637	-1502	-818.22		8999	1.8404	6755	3481			2.32	Si
SLU 35	14.85	-4114	-1483	825.17		7983	1.8404	6620	3411			2.3	Si

Verifica a taglio nel piano secondo D.M. 17-01-18 (N.T.C.) §7.8.2.2.2 con rottura per scorrimento in combinazioni sismiche, γM = 2

Comb.	Quota	N	V par	M	σ0	σN	l'	fvd	Vt scorr.	Vt fess.diag.	Vt,lim	c.s.	Verifica
SLV 13	12.95	-3094	-2427	-1444.14		8123	1.3603	9958	3793			1.56	Si
SLV 13	14.85	-3120	-1215	959.27		6061	1.8381	9546	4913			4.04	Si
SLV 11	12.95	-4529	-1668	-1797.21		10302	1.5701	10394	4569			2.74	Si
SLV 11	14.85	-3545	-911	503.73		6880	1.8404	9709	5003			5.49	Si
SLV 15	12.95	-3753	-2631	-2005.14		11578	1.1576	10649	3452			1.31	Si
SLV 15	14.85	-3663	-1206	921.25		7108	1.8404	9755	5027			4.17	Si
SLV 10	12.95	-2334	-988	72.77		4529	1.8404	9239	4761			4.82	Si
SLV 10	14.85	-1735	-941	630.47		3709	1.6704	9075	4244			4.51	Si
SLV 12	12.95	-4529	-1668	-1797.21		10302	1.5701	10394	4569			2.74	Si
SLV 12	14.85	-3545	-911	503.73		6880	1.8404	9709	5003			5.49	Si
SLV 9	12.95	-2334	-988	72.77		4529	1.8404	9239	4761			4.82	Si
SLV 9	14.85	-1735	-941	630.47		3709	1.6704	9075	4244			4.51	Si
SLV 1	12.95	-3117	1005	1019.92		6257	1.7788	9585	4774			4.75	Si
SLV 1	14.85	-974	-403	-106.9		1890	1.8404	8711	4489			11.15	Si
SLV 14	12.95	-3094	-2427	-1444.14		8123	1.3603	9958	3793			1.56	Si
SLV 14	14.85	-3120	-1215	959.27		6061	1.8381	9546	4913			4.04	Si
SLV 16	12.95	-3753	-2631	-2005.14		11578	1.1576	10649	3452			1.31	Si
SLV 16	14.85	-3663	-1206	921.25		7108	1.8404	9755	5027			4.17	Si
SLV 2	12.95	-3117	1005	1019.92		6257	1.7788	9585	4774			4.75	Si
SLV 2	14.85	-974	-403	-106.9		1890	1.8404	8711	4489			11.15	Si

Verifica a pressoflessione fuori piano D.M. 17-01-18 (N.T.C.)

quota 13.6 Wa 0.05 denominatore 8 γM = 2

Comb.	fd	Sa	σ0	N	M	Mc	Coeff.s.	Verifica
SLV 5	143750	0.53	0	-1063	200.59	0	0	No, e>t/2
SLV 6	143750	0.53	0	-1063	200.59	0	0	No, e>t/2
SLV 9	143750	0.53	0	-1235	200.59	0	0	No, e>t/2
SLV 10	143750	0.53	0	-1235	200.59	0	0	No, e>t/2
SLV 2	143750	0.53	4193	-2161	200.59	292.12	1.46	Si
SLV 1	143750	0.53	4193	-2161	200.59	292.12	1.46	Si
SLV 13	143750	0.53	5308	-2735	200.59	366.29	1.83	Si
SLV 14	143750	0.53	5308	-2735	200.59	366.29	1.83	Si
SLV 3	143750	0.53	6354	-3274	200.59	434.53	2.17	Si
SLV 4	143750	0.53	6354	-3274	200.59	434.53	2.17	Si

Verifica dei meccanismi locali di collasso con analisi cinematica lineare

forza di aggancio al piano = 0 quota mezzeria = 13.6 Wa = 0.05 Ta = 0.0573

Comb.	N top	N base	V orto	α0	M*	e*	a0*	aLim	Verifica
SLV 13	-2120	-4877	-22	0.057	454.5	0.893	0.93383	9.07197	No
SLV 14	-2120	-4877	-22	0.057	454.5	0.893	0.93383	9.07197	No
SLV 10	-1656	-2860	-36	0.054	410.8	0.889	0.88979	8.24559	No
SLV 9	-1656	-2860	-36	0.054	410.8	0.889	0.88979	8.24559	No
SLV 16	-2222	-5872	-6	0.061	464.2	0.893	0.99602	9.07197	No
SLV 15	-2222	-5872	-6	0.061	464.2	0.893	0.99602	9.07197	No
SLV 6	-1360	-2126	-33	0.056	383.8	0.889	0.92331	8.24559	No
SLV 5	-1360	-2126	-33	0.056	383.8	0.889	0.92331	8.24559	No
SLV 12	-1997	-6177	15	0.06	442.8	0.892	0.97165	8.24559	No
SLV 11	-1997	-6177	15	0.06	442.8	0.892	0.97165	8.24559	No

Tabella dei coefficienti di sicurezza minimi

Stato limite	Coeff.s.	Comb.	Verifica
PF_SLU	3.288	SLU 40	Si
V_SLU	2.137	SLU 78	Si
PF_SLV	1.62	SLV 15	Si
V_SLV	1.312	SLV 15	Si
PFFP_SLV	0	SLV 5	No
R_SLV	0.103	SLV 13	No

Maschio 252

Verifiche condotte secondo D.M. 17-01-18 (N.T.C.)

Dati geometrici

X ini.	Y ini.	X fin.	Y fin.	Quota i.	Quota.s	l	Sp.	h netta	h ini.	h fin.	a	a.s.,sx	a.s.,dx
-0.117	-3.169	-0.117	5.948	L6	L7	9.117	0.28	3.1	3.1	3.1			

Caratteristiche del materiale

(Circolare 7 21-01-19 C8.5.I) Muratura in mattoni pieni e malta di calce LC2_Corti

fb	fk	fvk0	fmedio	τ0	fv0	μ	ϕ	fv,lim	E	G	FC
600000			345000	9000	20000	0.58	0.77	32500	320000000	128000000	1.2

Verifica a pressoflessione nel piano secondo D.M. 17-01-18 NTC §7.8.2.2.1 in combinazioni non sismiche, γM = 3

Comb.	Quota	N	M	σ0	Mu	c.s.	Verifica
SLU 13	12.05	-23736	-597.56	9298	95855.35	160.412	Si
SLU 13	15.15	-3334	-382.16	1306	14953.2	39.128	Si
SLU 10	12.05	-22736	-554.75	8906	92313.49	166.406	Si
SLU 10	15.15	-2664	-375.69	1043	11987.41	31.908	Si
SLU 52	12.05	-28227	-572.18	11057	111209.94	194.362	Si
SLU 52	15.15	-3267	-346.19	1280	14661.02	42.35	Si
SLU 31	12.05	-25015	-765.37	9799	100316.68	131.07	Si
SLU 31	15.15	-3030	-392.93	1187	13611.27	34.641	Si
SLU 2	12.05	-20792	-314.57	8144	85304.88	271.177	Si
SLU 2	15.15	-2520	-355.25	987	11350.55	31.951	Si
SLU 26	12.05	-24071	-568	9429	97029.54	170.827	Si
SLU 26	15.15	-3557	-378.96	1393	15935.95	42.052	Si
SLU 23	12.05	-23070	-525.19	9037	93502.35	178.036	Si
SLU 23	15.15	-2887	-372.48	1131	12976.71	34.838	Si
SLU 5	12.05	-21792	-357.38	8536	88932.04	248.844	Si
SLU 5	15.15	-3190	-361.72	1250	14320.54	39.59	Si
SLU 44	12.05	-26282	-332	10295	104669.43	315.268	Si
SLU 44	15.15	-3124	-325.74	1224	14027.95	43.064	Si
SLU 34	12.05	-26015	-808.17	10191	103758.57	128.386	Si
SLU 34	15.15	-3700	-399.4	1449	16566.3	41.478	Si

Verifica a pressoflessione nel piano secondo D.M. 17-01-18 NTC §7.8.2.2.1 in combinazioni sismiche, γM = 2

Comb.	Quota	N	M	σ0	Mu	c.s.	Verifica
SLV 9	12.05	-22898	-19372.76	8970	96723.35	4.993	Si
SLV 9	15.15	-2798	-4141.68	1096	12641.74	3.052	Si
SLV 5	12.05	-20886	-20087.22	8182	88838.85	4.423	Si
SLV 5	15.15	-2676	-4510.6	1048	12095.77	2.682	Si
SLV 7	12.05	-21329	18517.56	8355	90583.9	4.892	Si
SLV 7	15.15	-2355	4277.45	922	10653.62	2.491	Si
SLV 8	12.05	-21329	18517.56	8355	90583.9	4.892	Si
SLV 8	15.15	-2355	4277.45	922	10653.62	2.491	Si
SLV 12	12.05	-23341	19232.02	9143	98442.36	5.119	Si
SLV 12	15.15	-2477	4646.37	970	11200.73	2.411	Si
SLV 1	12.05	-18694	-7409.09	7323	80112.78	10.813	Si
SLV 1	15.15	-2422	-1865.19	949	10953.39	5.873	Si
SLV 10	12.05	-22898	-19372.76	8970	96723.35	4.993	Si
SLV 10	15.15	-2798	-4141.68	1096	12641.74	3.052	Si
SLV 6	12.05	-20886	-20087.22	8182	88838.85	4.423	Si
SLV 6	15.15	-2676	-4510.6	1048	12095.77	2.682	Si
SLV 2	12.05	-18694	-7409.09	7323	80112.78	10.813	Si
SLV 2	15.15	-2422	-1865.19	949	10953.39	5.873	Si
SLV 11	12.05	-23341	19232.02	9143	98442.36	5.119	Si
SLV 11	15.15	-2477	4646.37	970	11200.73	2.411	Si

Verifica a taglio nel piano secondo D.M. 17-01-18 (N.T.C.) §7.8.2.2.2 con rottura per scorrimento in combinazioni non sismiche, γM = 3

Comb.	Quota	N	V par	M	σ0	σN	I'	fvd	Vt scorr.	Vt fess.diag.	Vt,lim	c.s.	Verifica
SLU 5	12.05	-21792	-393	-357.38		8536	9.1173	6694	17088			43.52	Si
SLU 5	15.15	-3190	-198	-361.72		1250	9.1173	5722	14608			73.9	Si
SLU 10	12.05	-22736	-404	-554.75		8906	9.1173	6743	17214			42.63	Si
SLU 10	15.15	-2664	-185	-375.69		1043	9.1173	5695	14538			78.46	Si
SLU 13	12.05	-23736	-402	-597.56		9298	9.1173	6795	17347			43.14	Si
SLU 13	15.15	-3334	-206	-382.16		1306	9.1173	5730	14627			71	Si
SLU 26	12.05	-24071	-400	-568		9429	9.1173	6813	17392			43.46	Si
SLU 26	15.15	-3557	-211	-378.96		1393	9.1173	5741	14657			69.42	Si
SLU 2	12.05	-20792	-394	-314.57		8144	9.1173	6641	16955			43	Si
SLU 2	15.15	-2520	-177	-355.25		987	9.1173	5687	14519			82.05	Si
SLU 31	12.05	-25015	-411	-765.37		9799	9.1173	6862	17518			42.59	Si
SLU 31	15.15	-3030	-199	-392.93		1187	9.1173	5714	14586			73.38	Si
SLU 34	12.05	-26015	-410	-808.17		10191	9.1173	6914	17651			43.09	Si
SLU 34	15.15	-3700	-219	-399.4		1449	9.1173	5749	14676			66.86	Si
SLU 52	12.05	-28227	-405	-572.18		11057	9.1173	7030	17946			44.28	Si
SLU 52	15.15	-3267	-195	-346.19		1280	9.1173	5726	14618			74.8	Si
SLU 73	12.05	-30506	-413	-782.8		11950	9.1173	7149	18250			44.21	Si
SLU 73	15.15	-3634	-209	-363.42		1423	9.1173	5745	14667			70.2	Si
SLU 23	12.05	-23070	-402	-525.19		9037	9.1173	6761	17259			42.94	Si
SLU 23	15.15	-2887	-190	-372.48		1131	9.1173	5706	14567			76.5	Si

Verifica a taglio nel piano secondo D.M. 17-01-18 (N.T.C.) §7.8.2.2.2 con rottura per scorrimento in combinazioni sismiche, γM = 2

Comb.	Quota	N	V par	M	σ0	σN	I'	fvd	Vt scorr.	Vt fess.diag.	Vt,lim	c.s.	Verifica
SLV 11	12.05	-23341	12172	19232.02		9143	9.1173	10162	25942			2.13	Si
SLV 11	15.15	-2477	6525	4646.37		1099	8.0479	8553	19274			2.95	Si
SLV 8	12.05	-21329	12031	18517.56		8355	9.1173	10004	25540			2.12	Si
SLV 8	15.15	-2355	6430	4277.45		1022	8.2265	8538	19666			3.06	Si
SLV 5	12.05	-20886	-12208	-20087.22		8182	9.1173	9970	25451			2.08	Si
SLV 5	15.15	-2676	-6636	-4510.6		1109	8.6199	8555	20648			3.11	Si
SLV 12	12.05	-23341	12172	19232.02		9143	9.1173	10162	25942			2.13	Si
SLV 12	15.15	-2477	6525	4646.37		1099	8.0479	8553	19274			2.95	Si
SLV 1	12.05	-18694	-3889	-7409.09		7323	9.1173	9798	25013			6.43	Si
SLV 1	15.15	-2422	-2174	-1865.19		949	9.1173	8523	21758			10.01	Si
SLV 2	12.05	-18694	-3889	-7409.09		7323	9.1173	9798	25013			6.43	Si
SLV 2	15.15	-2422	-2174	-1865.19		949	9.1173	8523	21758			10.01	Si
SLV 6	12.05	-20886	-12208	-20087.22		8182	9.1173	9970	25451			2.08	Si
SLV 6	15.15	-2676	-6636	-4510.6		1109	8.6199	8555	20648			3.11	Si
SLV 9	12.05	-22898	-12068	-19372.76		8970	9.1173	10127	25853			2.14	Si
SLV 9	15.15	-2798	-6541	-4141.68		1096	9.1173	8553	21833			3.34	Si

Comb.	Quota	N	V par	M	σ0	σN	l'	fvd	Vt scorr.	Vt fess.diag.	Vt,lim	c.s.	Verifica
SLV 10	12.05	-22898	-12068	-19372.76		8970	9.1173	10127	25853			2.14	Si
SLV 10	15.15	-2798	-6541	-4141.68		1096	9.1173	8553	21833			3.34	Si
SLV 7	12.05	-21329	12031	18517.56		8355	9.1173	10004	25540			2.12	Si
SLV 7	15.15	-2355	6430	4277.45		1022	8.2265	8538	19666			3.06	Si

Verifica a pressoflessione fuori piano D.M. 17-01-18 (N.T.C.)

quota 13.6 Wa 0.05 denominatore 8 γM = 2

Comb.	fd	Sa	σ0	N	M	Mc	Coeff.s.	Verifica
SLV 1	143750	0.53	3755	-9586	993.71	1300.77	1.31	Si
SLV 2	143750	0.53	3755	-9586	993.71	1300.77	1.31	Si
SLV 3	143750	0.53	3794	-9686	993.71	1313.94	1.32	Si
SLV 4	143750	0.53	3794	-9686	993.71	1313.94	1.32	Si
SLV 6	143750	0.53	4228	-10793	993.71	1458.76	1.47	Si
SLV 5	143750	0.53	4228	-10793	993.71	1458.76	1.47	Si
SLV 8	143750	0.53	4359	-11128	993.71	1502.29	1.51	Si
SLV 7	143750	0.53	4359	-11128	993.71	1502.29	1.51	Si
SLV 10	143750	0.53	4673	-11928	993.71	1606.12	1.62	Si
SLV 9	143750	0.53	4673	-11928	993.71	1606.12	1.62	Si

Verifica dei meccanismi locali di collasso con analisi cinematica lineare

forza di aggancio al piano = 0 quota mezzeria = 13.6 Wa = 0.05 Ta = 0.0573

Comb.	N top	N base	V orto	α0	M*	e*	a0*	aLim	Verifica
SLV 1	-2422	-18694	-361	0.041	1552	0.914	0.65251	9.07197	No
SLV 2	-2422	-18694	-361	0.041	1552	0.914	0.65251	9.07197	No
SLV 4	-2325	-18827	-352	0.042	1545.7	0.915	0.66647	9.07197	No
SLV 3	-2325	-18827	-352	0.042	1545.7	0.915	0.66647	9.07197	No
SLV 16	-2731	-25534	330	0.044	1572.9	0.909	0.70929	9.07197	No
SLV 15	-2731	-25534	330	0.044	1572.9	0.909	0.70929	9.07197	No
SLV 13	-2828	-25401	320	0.045	1579.7	0.908	0.7255	9.07197	No
SLV 14	-2828	-25401	320	0.045	1579.7	0.908	0.7255	9.07197	No
SLV 5	-2676	-20886	-134	0.064	1569.1	0.91	1.02796	8.24559	No
SLV 6	-2676	-20886	-134	0.064	1569.1	0.91	1.02796	8.24559	No

Tabella dei coefficienti di sicurezza minimi

Stato limite	Coeff.s.	Comb.	Verifica
PF_SLU	31.908	SLU 10	Si
V_SLU	42.587	SLU 31	Si
PF_SLV	2.411	SLV 11	Si
V_SLV	2.085	SLV 5	Si
PFFP_SLV	1.309	SLV 1	Si
R_SLV	0.072	SLV 1	No

Maschio 253

Verifiche condotte secondo D.M. 17-01-18 (N.T.C.)

Dati geometrici

X ini.	Y ini.	X fin.	Y fin.	Quota i.	Quota.s	l	Sp.	h netta	h ini.	h fin.	a	a.s.,sx	a.s.,dx
-16.968	-4.546	-16.968	-4.413	L6	F1	0.133	0.28	2.578	2.545	2.611			

Caratteristiche del materiale

(Circolare 7 21-01-19 C8.5.I) Muratura in mattoni pieni e malta di calce LC2_Corti

fb	fk	fvk0	fmedio	τ0	fv0	μ	ϕ	fv,lim	E	G	FC
600000			345000	9000	20000	0.58	0.77	32500	320000000	128000000	1.2

Verifica a pressoflessione nel piano secondo D.M. 17-01-18 NTC §7.8.2.2.1 in combinazioni non sismiche, γM = 3

Comb.	Quota	N	M	σ0	Mu	c.s.	Verifica
SLU 46	12.05	-387	-69.71	0	0	0	No, e>l/2
SLU 46	14.02	-703	6.65	18833	36	5.412	Si
SLU 38	12.05	-393	-67.68	0	0	0	No, e>l/2
SLU 38	14.02	-708	6.44	18971	36.18	5.614	Si
SLU 49	12.05	-460	-67.24	0	0	0	No, e>l/2
SLU 49	14.02	-739	5.81	19796	37.25	6.408	Si
SLU 51	12.05	-468	-65.99	0	0	0	No, e>l/2
SLU 51	14.02	-739	5.5	19798	37.26	6.768	Si
SLU 44	12.05	-155	-108.7	0	0	0	No, e>l/2
SLU 44	14.02	-865	12.79	23195	41.24	3.224	Si
SLU 42	12.05	-326	-71.34	0	0	0	No, e>l/2
SLU 42	14.02	-679	7.5	18203	35.14	4.686	Si
SLU 36	12.05	-385	-68.93	0	0	0	No, e>l/2
SLU 36	14.02	-708	6.75	18970	36.18	5.357	Si
SLU 47	12.05	-228	-106.23	0	0	0	No, e>l/2
SLU 47	14.02	-901	11.96	24157	42.25	3.533	Si
SLU 40	12.05	-253	-73.81	0	0	0	No, e>l/2
SLU 40	14.02	-643	8.34	17240	33.79	4.053	Si
SLU 34	12.05	-153	-107.92	0	0	0	No, e>l/2
SLU 34	14.02	-871	12.9	23331	41.39	3.209	Si

Verifica a pressoflessione nel piano secondo D.M. 17-01-18 NTC §7.8.2.2.1 in combinazioni sismiche, γM = 2

Comb.	Quota	N	M	σ0	Mu	c.s.	Verifica
SLV 7	12.05	3314	-762.07	0	0	0	No, Trazione
SLV 7	14.02	-4041	61.56	108311	30.58	0.497	No, M>Mu
SLV 9	12.05	-4244	736.59	0	0	0	No, e>l/2
SLV 9	14.02	3431	-63.06	0	0	0	No, Trazione
SLV 3	12.05	2978	-338.35	0	0	0	No, Trazione

Comb.	Quota	N	M	σ0	Mu	c.s.	Verifica
SLV 3	14.02	-1585	-88.66	42471	68.88	0.777	No, M>Mu
SLV 8	12.05	3314	-762.07	0	0	0	No, Trazione
SLV 8	14.02	-4041	61.56	108311	30.58	0.497	No, M>Mu
SLV 2	12.05	1167	91.31	0	0	0	No, Trazione
SLV 2	14.02	626	-147.13	0	0	0	No, Trazione
SLV 4	12.05	2978	-338.35	0	0	0	No, Trazione
SLV 4	14.02	-1585	-88.66	42471	68.88	0.777	No, M>Mu
SLV 10	12.05	-4244	736.59	0	0	0	No, e>l/2
SLV 10	14.02	3431	-63.06	0	0	0	No, Trazione
SLV 1	12.05	1167	91.31	0	0	0	No, Trazione
SLV 1	14.02	626	-147.13	0	0	0	No, Trazione
SLV 6	12.05	-2721	670.12	0	0	0	No, e>l/2
SLV 6	14.02	3327	-133.35	0	0	0	No, Trazione
SLV 5	12.05	-2721	670.12	0	0	0	No, e>l/2
SLV 5	14.02	3327	-133.35	0	0	0	No, Trazione

Verifica a taglio nel piano secondo D.M. 17-01-18 (N.T.C.) §7.8.2.2.2 con rottura per scorrimento in combinazioni non sismiche, γM = 3

Comb.	Quota	N	V par	M	σ0	σN	l'	fvd	Vt scorr.	Vt fess.diag.	Vt,lim	c.s.	Verifica
SLU 46	12.05	-387	-214	-69.71		0	0	5556	0			0	No, Vu<V
SLU 46	14.02	-703	71	6.65		18833	0.1333	8067	301			4.25	Si
SLU 36	12.05	-385	-210	-68.93		0	0	5556	0			0	No, Vu<V
SLU 36	14.02	-708	81	6.75		18970	0.1333	8085	302			3.73	Si
SLU 42	12.05	-326	-216	-71.34		0	0	5556	0			0	No, Vu<V
SLU 42	14.02	-679	85	7.5		18203	0.1333	7983	298			3.49	Si
SLU 49	12.05	-460	-207	-67.24		0	0	5556	0			0	No, Vu<V
SLU 49	14.02	-739	66	5.81		19796	0.1333	8195	306			4.62	Si
SLU 44	12.05	-155	-331	-108.7		0	0	5556	0			0	No, Vu<V
SLU 44	14.02	-865	118	12.79		23195	0.1333	8648	323			2.74	Si
SLU 38	12.05	-393	-207	-67.68		0	0	5556	0			0	No, Vu<V
SLU 38	14.02	-708	77	6.44		18971	0.1333	8085	302			3.91	Si
SLU 40	12.05	-253	-223	-73.81		0	0	5556	0			0	No, Vu<V
SLU 40	14.02	-643	90	8.34		17240	0.1333	7854	293			3.26	Si
SLU 34	12.05	-153	-327	-107.92		0	0	5556	0			0	No, Vu<V
SLU 34	14.02	-871	128	12.9		23331	0.1333	8666	323			2.52	Si
SLU 47	12.05	-228	-324	-106.23		0	0	5556	0			0	No, Vu<V
SLU 47	14.02	-901	113	11.96		24157	0.1333	8777	327			2.89	Si
SLU 51	12.05	-468	-204	-65.99		0	0	5556	0			0	No, Vu<V
SLU 51	14.02	-739	62	5.5		19798	0.1333	8195	306			4.9	Si

Verifica a taglio nel piano secondo D.M. 17-01-18 (N.T.C.) §7.8.2.2.2 con rottura per scorrimento in combinazioni sismiche, γM = 2

Comb.	Quota	N	V par	M	σ0	σN	l'	fvd	Vt scorr.	Vt fess.diag.	Vt,lim	c.s.	Verifica
SLV 10	12.05	-4244	1873	736.59		0	0	8333	0			0	No, Vu<V
SLV 10	14.02	3431	-771	-63.06		0	0	8333	0			0	No, Vu<V
SLV 1	12.05	1167	1244	91.31		0	0	8333	0			0	No, Vu<V
SLV 1	14.02	626	-521	-147.13		0	0	8333	0			0	No, Vu<V
SLV 3	12.05	2978	-21	-338.35		0	0	8333	0			0	No, Vu<V
SLV 3	14.02	-1585	-6	-88.66		176647	0.032	16250	146			23.63	Si
SLV 2	12.05	1167	1244	91.31		0	0	8333	0			0	No, Vu<V
SLV 2	14.02	626	-521	-147.13		0	0	8333	0			0	No, Vu<V
SLV 8	12.05	3314	-1954	-762.07		0	0	8333	0			0	No, Vu<V
SLV 8	14.02	-4041	783	61.56		108311	0.1333	16250	606			0.77	No, Vu<V
SLV 5	12.05	-2721	2264	670.12		0	0	8333	0			0	No, Vu<V
SLV 5	14.02	3327	-933	-133.35		0	0	8333	0			0	No, Vu<V
SLV 6	12.05	-2721	2264	670.12		0	0	8333	0			0	No, Vu<V
SLV 6	14.02	3327	-933	-133.35		0	0	8333	0			0	No, Vu<V
SLV 7	12.05	3314	-1954	-762.07		0	0	8333	0			0	No, Vu<V
SLV 7	14.02	-4041	783	61.56		108311	0.1333	16250	606			0.77	No, Vu<V
SLV 4	12.05	2978	-21	-338.35		0	0	8333	0			0	No, Vu<V
SLV 4	14.02	-1585	-6	-88.66		176647	0.032	16250	146			23.63	Si
SLV 9	12.05	-4244	1873	736.59		0	0	8333	0			0	No, Vu<V
SLV 9	14.02	3431	-771	-63.06		0	0	8333	0			0	No, Vu<V

Verifica a pressoflessione fuori piano D.M. 17-01-18 (N.T.C.)

quota 13.322 Wa 0.05 denominatore 8 γM = 2

Comb.	fd	Sa	σ0	N	M	Mc	Coeff.s.	Verifica
SLV 11	143750	0.52	138328	-5161	10.16	0	0	No, Rottura per schiacciamento
SLV 12	143750	0.52	138328	-5161	10.16	0	0	No, Rottura per schiacciamento
SLV 10	143750	0.52	0	4679	10.16	0	0	No, Trazione
SLV 8	143750	0.52	153552	-5729	10.16	0	0	No, Rottura per schiacciamento
SLV 6	143750	0.52	0	4111	10.16	0	0	No, Trazione
SLV 9	143750	0.52	0	4679	10.16	0	0	No, Trazione
SLV 5	143750	0.52	0	4111	10.16	0	0	No, Trazione
SLV 2	143750	0.52	0	4	10.16	0	0	No, Trazione
SLV 1	143750	0.52	0	4	10.16	0	0	No, Trazione
SLV 7	143750	0.52	153552	-5729	10.16	0	0	No, Rottura per schiacciamento

Verifica dei meccanismi locali di collasso con analisi cinematica lineare

forza di aggancio al piano = 0 quota mezzeria = 13.322 Wa = 0.05 Ta = 0.0396

Comb.	N top	N base	V orto	α0	M*	e*	a0*	aLim	Verifica
SLV 7	-3246	3314	19	0	0	0	0	6.56757	No, Trazione
SLV 2	-149	1167	-34	0	0	0	0	6.99333	No, Trazione
SLV 5	2384	-2721	-33	0	0	0	0	6.56757	No, Trazione
SLV 10	2865	-4244	-17	0	0	0	0	6.56757	No, Trazione
SLV 9	2865	-4244	-17	0	0	0	0	6.56757	No, Trazione
SLV 1	-149	1167	-34	0	0	0	0	6.99333	No, Trazione

Comb.	N top	N base	V orto	α0	M*	e*	a0*	aLim	Verifica
SLV 6	2384	-2721	-33	0	0	0	0	6.56757	No, Trazione
SLV 3	-1837	2978	-18	0	0	0	0	6.99333	No, Trazione
SLV 4	-1837	2978	-18	0	0	0	0	6.99333	No, Trazione
SLV 8	-3246	3314	19	0	0	0	0	6.56757	No, Trazione

Tabella dei coefficienti di sicurezza minimi

Stato limite	Coeff.s.	Comb.	Verifica
PF_SLU	0	SLU 2	No
V_SLU	0	SLU 2	No
PF_SLV	0	SLV 14	No
V_SLV	0	SLV 1	No
PFFP_SLV	0	SLV 14	No
R_SLV	0	SLV 14	No

Maschio 254

Verifiche condotte secondo D.M. 17-01-18 (N.T.C.)

Dati geometrici

X ini.	Y ini.	X fin.	Y fin.	Quota i.	Quota.s	l	Sp.	h netta	h ini.	h fin.	a	a.s.,sx	a.s.,dx
-16.968	-4.696	-16.697	-4.696	L6	F1	0.271	0.3	2.47	2.47	2.47			

Caratteristiche del materiale

(Circolare 7 21-01-19 C8.5.I) Muratura in mattoni pieni e malta di calce LC2_Corti

fb	fk	fvk0	fmedio	τ0	fv0	μ	ϕ	fv,lim	E	G	FC
600000			345000	9000	20000	0.58	0.77	32500	320000000	128000000	1.2

Verifica a pressoflessione nel piano secondo D.M. 17-01-18 NTC §7.8.2.2.1 in combinazioni non sismiche, γM = 3

Comb.	Quota	N	M	σ0	Mu	c.s.	Verifica
SLU 31	12.05	-1942	62.55	23864	186.18	2.976	Si
SLU 31	14.02	30	-19.05	0	0	0	No, Trazione
SLU 2	12.05	-1883	68.3	23137	182.79	2.676	Si
SLU 2	14.02	33	-19.85	0	0	0	No, Trazione
SLU 5	12.05	-2073	75	25482	193.22	2.576	Si
SLU 5	14.02	-145	-24.52	0	0	0	No, e>l/2
SLU 73	12.05	-2275	68.03	27958	202.62	2.978	Si
SLU 73	14.02	-123	-24.9	0	0	0	No, e>l/2
SLU 65	12.05	-2280	73.92	28022	202.84	2.744	Si
SLU 65	14.02	-154	-26.73	0	0	0	No, e>l/2
SLU 34	12.05	-2133	69.26	26209	196.15	2.832	Si
SLU 34	14.02	-148	-23.72	0	0	0	No, e>l/2
SLU 52	12.05	-2211	67.89	27168	199.8	2.943	Si
SLU 52	14.02	-88	-23.85	0	0	0	No, e>l/2
SLU 10	12.05	-1877	62.41	23074	182.49	2.924	Si
SLU 10	14.02	65	-18.01	0	0	0	No, Trazione
SLU 13	12.05	-2068	69.11	25419	192.96	2.792	Si
SLU 13	14.02	-114	-22.68	0	0	0	No, e>l/2
SLU 44	12.05	-2216	73.78	27232	200.03	2.711	Si
SLU 44	14.02	-120	-25.69	0	0	0	No, e>l/2

Verifica a pressoflessione nel piano secondo D.M. 17-01-18 NTC §7.8.2.2.1 in combinazioni sismiche, γM = 2

Comb.	Quota	N	M	σ0	Mu	c.s.	Verifica
SLV 6	12.05	4592	-374.3	0	0	0	No, Trazione
SLV 6	14.02	-4698	4.64	57741	336.05	72.442	Si
SLV 8	12.05	-6671	247.43	81990	297.63	1.203	Si
SLV 8	14.02	3884	21.87	0	0	0	No, Trazione
SLV 4	12.05	-2354	-157.36	28925	243.62	1.548	Si
SLV 4	14.02	1213	94.49	0	0	0	No, Trazione
SLV 9	12.05	4270	-213.86	0	0	0	No, Trazione
SLV 9	14.02	-4984	-62.77	61253	337.06	5.37	Si
SLV 5	12.05	4592	-374.3	0	0	0	No, Trazione
SLV 5	14.02	-4698	4.64	57741	336.05	72.442	Si
SLV 1	12.05	1025	-343.88	0	0	0	No, Trazione
SLV 1	14.02	-1361	89.32	16729	159.32	1.784	Si
SLV 7	12.05	-6671	247.43	81990	297.63	1.203	Si
SLV 7	14.02	3884	21.87	0	0	0	No, Trazione
SLV 2	12.05	1025	-343.88	0	0	0	No, Trazione
SLV 2	14.02	-1361	89.32	16729	159.32	1.784	Si
SLV 10	12.05	4270	-213.86	0	0	0	No, Trazione
SLV 10	14.02	-4984	-62.77	61253	337.06	5.37	Si
SLV 3	12.05	-2354	-157.36	28925	243.62	1.548	Si
SLV 3	14.02	1213	94.49	0	0	0	No, Trazione

Verifica a taglio nel piano secondo D.M. 17-01-18 (N.T.C.) §7.8.2.2.2 con rottura per scorrimento in combinazioni non sismiche, γM = 3

Comb.	Quota	N	V par	M	σ0	σN	l'	fvd	Vt scorr.	Vt fess.diag.	Vt,lim	c.s.	Verifica
SLU 44	12.05	-2216	221	73.78		27232	0.2712	9186	747			3.38	Si
SLU 44	14.02	-120	-72	-25.69		0	0	5556	0			0	No, Vu<V
SLU 73	12.05	-2275	222	68.03		27958	0.2712	9283	755			3.4	Si
SLU 73	14.02	-123	-84	-24.9		0	0	5556	0			0	No, Vu<V
SLU 23	12.05	-1947	215	68.45		23927	0.2712	8746	712			3.31	Si
SLU 23	14.02	-1	-66	-20.89		0	0	5556	0			0	No, Vu<V
SLU 31	12.05	-1942	213	62.55		23864	0.2712	8737	711			3.33	Si
SLU 31	14.02	30	-69	-19.05		0	0	5556	0			0	No, Vu<V
SLU 13	12.05	-2068	212	69.11		25419	0.2712	8945	728			3.43	Si
SLU 13	14.02	-114	-79	-22.68		0	0	5556	0			0	No, Vu<V
SLU 52	12.05	-2211	220	67.89		27168	0.2712	9178	747			3.4	Si

Comb.	Quota	N	V par	M	σ0	σN	l'	fvd	Vt scorr.	Vt fess.diag.	Vt,lim	c.s.	Verifica
SLU 52	14.02	-88	-75	-23.85		0	0	5556	0			0	No, Vu<V
SLU 10	12.05	-1877	211	62.41		23074	0.2712	8632	702			3.34	Si
SLU 10	14.02	65	-60	-18.01		0	0	5556	0			0	No, Vu<V
SLU 34	12.05	-2133	215	69.26		26209	0.2712	9050	736			3.42	Si
SLU 34	14.02	-148	-88	-23.72		0	0	5556	0			0	No, Vu<V
SLU 2	12.05	-1883	212	68.3		23137	0.2712	8641	703			3.32	Si
SLU 2	14.02	33	-57	-19.85		0	0	5556	0			0	No, Vu<V
SLU 5	12.05	-2073	214	75		25482	0.2712	8953	728			3.41	Si
SLU 5	14.02	-145	-77	-24.52		0	0	5556	0			0	No, Vu<V

Verifica a taglio nel piano secondo D.M. 17-01-18 (N.T.C.) §7.8.2.2.2 con rottura per scorrimento in combinazioni sismiche, γM = 2

Comb.	Quota	N	V par	M	σ0	σN	l'	fvd	Vt scorr.	Vt fess.diag.	Vt,lim	c.s.	Verifica
SLV 2	12.05	1025	-896	-343.88		0	0	8333	0			0	No, Vu<V
SLV 2	14.02	-1361	-135	89.32		21608	0.21	12655	797			5.91	Si
SLV 6	12.05	4592	-1572	-374.3		0	0	8333	0			0	No, Vu<V
SLV 6	14.02	-4698	-187	4.64		57741	0.2712	16250	1322			7.07	Si
SLV 1	12.05	1025	-896	-343.88		0	0	8333	0			0	No, Vu<V
SLV 1	14.02	-1361	-135	89.32		21608	0.21	12655	797			5.91	Si
SLV 4	12.05	-2354	-21	-157.36		38038	0.2062	15941	986			47.07	Si
SLV 4	14.02	1213	-68	94.49		0	0	8333	0			0	No, Vu<V
SLV 8	12.05	-6671	1344	247.43		81990	0.2712	16250	1322			0.98	No, Vu<V
SLV 8	14.02	3884	38	21.87		0	0	8333	0			0	No, Vu<V
SLV 10	12.05	4270	-1277	-213.86		0	0	8333	0			0	No, Vu<V
SLV 10	14.02	-4984	-164	-62.77		61253	0.2712	16250	1322			8.06	Si
SLV 9	12.05	4270	-1277	-213.86		0	0	8333	0			0	No, Vu<V
SLV 9	14.02	-4984	-164	-62.77		61253	0.2712	16250	1322			8.06	Si
SLV 3	12.05	-2354	-21	-157.36		38038	0.2062	15941	986			47.07	Si
SLV 3	14.02	1213	-68	94.49		0	0	8333	0			0	No, Vu<V
SLV 7	12.05	-6671	1344	247.43		81990	0.2712	16250	1322			0.98	No, Vu<V
SLV 7	14.02	3884	38	21.87		0	0	8333	0			0	No, Vu<V
SLV 5	12.05	4592	-1572	-374.3		0	0	8333	0			0	No, Vu<V
SLV 5	14.02	-4698	-187	4.64		57741	0.2712	16250	1322			7.07	Si

Verifica a pressoflessione fuori piano D.M. 17-01-18 (N.T.C.)

quota 13.285 Wa 0.05 denominatore 8 γM = 2

Comb.	fd	Sa	σ0	N	M	Mc	Coeff.s.	Verifica
SLV 11	143750	0.52	0	889	19.82	0	0	No, Trazione
SLV 15	143750	0.52	0	135	19.82	0	0	No, Trazione
SLV 12	143750	0.52	0	889	19.82	0	0	No, Trazione
SLV 8	143750	0.52	0	584	19.82	0	0	No, Trazione
SLV 16	143750	0.52	0	135	19.82	0	0	No, Trazione
SLV 7	143750	0.52	0	584	19.82	0	0	No, Trazione
SLV 13	143750	0.52	10042	-817	19.82	112.49	5.67	Si
SLV 14	143750	0.52	10042	-817	19.82	112.49	5.67	Si
SLV 3	143750	0.52	10859	-884	19.82	120.75	6.09	Si
SLV 4	143750	0.52	10859	-884	19.82	120.75	6.09	Si

Verifica dei meccanismi locali di collasso con analisi cinematica lineare

forza di aggancio al piano = 0 quota mezzeria = 13.285 Wa = 0.05 Ta = 0.034

Comb.	N top	N base	V orto	α0	M*	e*	a0*	aLim	Verifica
SLV 8	1121	-6671	40	0	0	0	0	6.13048	No, Trazione
SLV 6	-1738	4592	-45	0	0	0	0	6.13048	No, Trazione
SLV 1	-940	1025	-20	0	0	0	0	6.46257	No, Trazione
SLV 10	-1563	4270	-41	0	0	0	0	6.13048	No, Trazione
SLV 9	-1563	4270	-41	0	0	0	0	6.13048	No, Trazione
SLV 2	-940	1025	-20	0	0	0	0	6.46257	No, Trazione
SLV 12	1295	-6993	44	0	0	0	0	6.13048	No, Trazione
SLV 5	-1738	4592	-45	0	0	0	0	6.13048	No, Trazione
SLV 7	1121	-6671	40	0	0	0	0	6.13048	No, Trazione
SLV 11	1295	-6993	44	0	0	0	0	6.13048	No, Trazione

Tabella dei coefficienti di sicurezza minimi

Stato limite	Coeff.s.	Comb.	Verifica
PF_SLU	0	SLU 31	No
V_SLU	0	SLU 2	No
PF_SLV	0	SLV 16	No
V_SLV	0	SLV 1	No
PFFP_SLV	0	SLV 16	No
R_SLV	0	SLV 16	No

Maschio 255

Verifiche condotte secondo D.M. 17-01-18 (N.T.C.)

Dati geometrici

X ini.	Y ini.	X fin.	Y fin.	Quota i.	Quota.s	l	Sp.	h netta	h ini.	h fin.	a	a.s.,sx	a.s.,dx
-14.857	-4.696	-13.727	-4.696	L6	F1	1.129	0.3	2.468	2.468	2.467			

Caratteristiche del materiale

(Circolare 7 21-01-19 C8.5.I) Muratura in mattoni pieni e malta di calce LC2_Corti

fb	fk	fvk0	fmedio	τ0	fv0	μ	ϕ	fv,lim	E	G	FC
600000			345000	9000	20000	0.58	0.77	32500	320000000	128000000	1.2

Verifica a pressoflessione nel piano secondo D.M. 17-01-18 NTC §7.8.2.2.1 in combinazioni non sismiche, γM = 3

Comb.	Quota	N	M	σ0	Mu	c.s.	Verifica

Comb.	Quota	N	M	σ0	Mu	c.s.	Verifica
SLU 34	12.05	-3598	413.87	10618	1766.74	4.269	Si
SLU 34	14.02	-2382	-383.28	7030	1229	3.207	Si
SLU 55	12.05	-4254	387.65	12556	2032.12	5.242	Si
SLU 55	14.02	-2597	-405.71	7665	1328.62	3.275	Si
SLU 47	12.05	-4249	330.94	12542	2030.23	6.135	Si
SLU 47	14.02	-2571	-404.75	7588	1316.59	3.253	Si
SLU 13	12.05	-3433	352.42	10131	1697.32	4.816	Si
SLU 13	14.02	-2195	-355.3	6480	1141.18	3.212	Si
SLU 23	12.05	-3172	337.28	9362	1585.38	4.7	Si
SLU 23	14.02	-1887	-305.47	5570	992.9	3.25	Si
SLU 2	12.05	-3007	275.83	8875	1513.1	5.486	Si
SLU 2	14.02	-1701	-277.49	5020	901.3	3.248	Si
SLU 5	12.05	-3428	295.7	10117	1695.27	5.733	Si
SLU 5	14.02	-2169	-354.35	6402	1128.71	3.185	Si
SLU 76	12.05	-4419	449.1	13043	2095.99	4.667	Si
SLU 76	14.02	-2784	-433.68	8215	1413.38	3.259	Si
SLU 68	12.05	-4414	392.39	13029	2094.13	5.337	Si
SLU 68	14.02	-2757	-432.73	8138	1401.55	3.239	Si
SLU 26	12.05	-3593	357.16	10603	1764.71	4.941	Si
SLU 26	14.02	-2356	-382.32	6953	1216.73	3.182	Si

Verifica a pressoflessione nel piano secondo D.M. 17-01-18 NTC §7.8.2.2.1 in combinazioni sismiche, γM = 2

Comb.	Quota	N	M	σ0	Mu	c.s.	Verifica
SLV 11	12.05	-3185	839.74	9401	1660.34	1.977	Si
SLV 11	14.02	-2868	-822.12	8464	1507.25	1.833	Si
SLV 5	12.05	-2767	-396.85	8166	1458.07	3.674	Si
SLV 5	14.02	-358	405.59	0	0	0	No, e>l/2
SLV 3	12.05	-1025	600.05	0	0	0	No, e>l/2
SLV 3	14.02	-429	-207.11	1266	239.7	1.157	Si
SLV 1	12.05	-1232	197.18	3635	674.87	3.423	Si
SLV 1	14.02	66	130.6	0	0	0	No, Trazione
SLV 7	12.05	-2076	946.04	6129	1113.8	1.177	Si
SLV 7	14.02	-2009	-720.11	5929	1079.35	1.499	Si
SLV 6	12.05	-2767	-396.85	8166	1458.07	3.674	Si
SLV 6	14.02	-358	405.59	0	0	0	No, e>l/2
SLV 12	12.05	-3185	839.74	9401	1660.34	1.977	Si
SLV 12	14.02	-2868	-822.12	8464	1507.25	1.833	Si
SLV 4	12.05	-1025	600.05	0	0	0	No, e>l/2
SLV 4	14.02	-429	-207.11	1266	239.7	1.157	Si
SLV 8	12.05	-2076	946.04	6129	1113.8	1.177	Si
SLV 8	14.02	-2009	-720.11	5929	1079.35	1.499	Si
SLV 2	12.05	-1232	197.18	3635	674.87	3.423	Si
SLV 2	14.02	66	130.6	0	0	0	No, Trazione

Verifica a taglio nel piano secondo D.M. 17-01-18 (N.T.C.) §7.8.2.2.2 con rottura per scorrimento in combinazioni non sismiche, γM = 3

Comb.	Quota	N	V par	M	σ0	σN	l'	fvd	Vt scorr.	Vt fess.diag.	Vt,lim	c.s.	Verifica
SLU 80	12.05	-4808	1140	433.72		14191	1.1294	7448	2523			2.21	Si
SLU 80	14.02	-3192	458	-479.54		9422	1.1294	6812	2308			5.04	Si
SLU 84	12.05	-4390	1050	438.15		12955	1.1294	7283	2468			2.35	Si
SLU 84	14.02	-2735	344	-403.1		8073	1.1294	6632	2247			6.53	Si
SLU 72	12.05	-4803	1062	377.01		14176	1.1294	7446	2523			2.38	Si
SLU 72	14.02	-3166	461	-478.59		9345	1.1294	6802	2305			5	Si
SLU 76	12.05	-4419	1103	449.1		13043	1.1294	7295	2472			2.24	Si
SLU 76	14.02	-2784	343	-433.68		8215	1.1294	6651	2254			6.57	Si
SLU 38	12.05	-3986	1042	398.49		11765	1.1294	7124	2414			2.32	Si
SLU 38	14.02	-2791	417	-429.14		8237	1.1294	6654	2254			5.41	Si
SLU 68	12.05	-4414	1024	392.39		13029	1.1294	7293	2471			2.41	Si
SLU 68	14.02	-2757	346	-432.73		8138	1.1294	6641	2250			6.5	Si
SLU 70	12.05	-4777	1032	371.88		14099	1.1294	7435	2519			2.44	Si
SLU 70	14.02	-3104	433	-462.5		9162	1.1294	6777	2296			5.3	Si
SLU 78	12.05	-4782	1110	428.59		14113	1.1294	7437	2520			2.27	Si
SLU 78	14.02	-3131	430	-463.46		9239	1.1294	6787	2300			5.34	Si
SLU 34	12.05	-3598	1005	413.87		10618	1.1294	6971	2362			2.35	Si
SLU 34	14.02	-2382	302	-383.28		7030	1.1294	6493	2200			7.29	Si
SLU 36	12.05	-3960	1012	393.36		11688	1.1294	7114	2410			2.38	Si
SLU 36	14.02	-2729	389	-413.05		8054	1.1294	6629	2246			5.77	Si

Verifica a taglio nel piano secondo D.M. 17-01-18 (N.T.C.) §7.8.2.2.2 con rottura per scorrimento in combinazioni sismiche, γM = 2

Comb.	Quota	N	V par	M	σ0	σN	l'	fvd	Vt scorr.	Vt fess.diag.	Vt,lim	c.s.	Verifica
SLV 5	12.05	-2767	-1456	-396.85		8166	1.1294	9967	3377			2.32	Si
SLV 5	14.02	-358	569	405.59		0	0	8333	0			0	No, Vu<V
SLV 11	12.05	-3185	2499	839.74		11755	0.9032	10684	2895			1.16	Si
SLV 11	14.02	-2868	-214	-822.12		11461	0.8341	10625	2659			12.4	Si
SLV 6	12.05	-2767	-1456	-396.85		8166	1.1294	9967	3377			2.32	Si
SLV 6	14.02	-358	569	405.59		0	0	8333	0			0	No, Vu<V
SLV 8	12.05	-2076	1957	946.04		21145	0.3273	12562	1234			0.63	No, Vu<V
SLV 8	14.02	-2009	359	-720.11		10823	0.6187	10498	1949			5.43	Si
SLV 2	12.05	-1232	-894	197.18		3635	1.1294	9060	3070			3.44	Si
SLV 2	14.02	66	1164	130.6		0	0	8333	0			0	No, Vu<V
SLV 7	12.05	-2076	1957	946.04		21145	0.3273	12562	1234			0.63	No, Vu<V
SLV 7	14.02	-2009	359	-720.11		10823	0.6187	10498	1949			5.43	Si
SLV 1	12.05	-1232	-894	197.18		3635	1.1294	9060	3070			3.44	Si
SLV 1	14.02	66	1164	130.6		0	0	8333	0			0	No, Vu<V
SLV 12	12.05	-3185	2499	839.74		11755	0.9032	10684	2895			1.16	Si
SLV 12	14.02	-2868	-214	-822.12		11461	0.8341	10625	2659			12.4	Si
SLV 3	12.05	-1025	130	600.05		0	0	8333	0			0	No, Vu<V
SLV 3	14.02	-429	1101	-207.11		5824	0.2455	9498	700			0.64	No, Vu<V
SLV 4	12.05	-1025	130	600.05		0	0	8333	0			0	No, Vu<V
SLV 4	14.02	-429	1101	-207.11		5824	0.2455	9498	700			0.64	No, Vu<V

Verifica a pressoflessione fuori piano D.M. 17-01-18 (N.T.C.)

quota 13.284 Wa 0.05 denominatore 8 γM = 2

Comb.	fd	Sa	σ0	N	M	Mc	Coeff.s.	Verifica
SLV 1	143750	0.52	0	-39	82.41	0	0	No, e>t/2
SLV 5	143750	0.52	0	-278	82.41	0	0	No, e>t/2
SLV 6	143750	0.52	0	-278	82.41	0	0	No, e>t/2
SLV 2	143750	0.52	0	-39	82.41	0	0	No, e>t/2
SLV 4	143750	0.52	3370	-1142	82.41	166.55	2.02	Si
SLV 3	143750	0.52	3370	-1142	82.41	166.55	2.02	Si
SLV 10	143750	0.52	4678	-1585	82.41	228.66	2.77	Si
SLV 9	143750	0.52	4678	-1585	82.41	228.66	2.77	Si
SLV 7	143750	0.52	11667	-3953	82.41	536.33	6.51	Si
SLV 8	143750	0.52	11667	-3953	82.41	536.33	6.51	Si

Verifica dei meccanismi locali di collasso con analisi cinematica lineare

forza di aggancio al piano = 0 quota mezzeria = 13.284 Wa = 0.05 Ta = 0.0339

Comb.	N top	N base	V orto	α0	M*	e*	a0*	aLim	Verifica
SLV 1	300	-1232	-11	0	0	0	0	6.45727	No, Trazione
SLV 5	119	-2767	25	0	0	0	0	6.12606	No, Trazione
SLV 6	119	-2767	25	0	0	0	0	6.12606	No, Trazione
SLV 2	300	-1232	-11	0	0	0	0	6.45727	No, Trazione
SLV 13	-1719	-4928	29	0.068	297.1	0.904	1.08634	6.45727	No
SLV 14	-1719	-4928	29	0.068	297.1	0.904	1.08634	6.45727	No
SLV 7	-1382	-2076	-37	0.065	264.2	0.898	1.05244	6.12606	No
SLV 8	-1382	-2076	-37	0.065	264.2	0.898	1.05244	6.12606	No
SLV 11	-1988	-3185	-25	0.068	323.8	0.909	1.09331	6.12606	No
SLV 12	-1988	-3185	-25	0.068	323.8	0.909	1.09331	6.12606	No

Tabella dei coefficienti di sicurezza minimi

Stato limite	Coeff.s.	Comb.	Verifica
PF_SLU	3.182	SLU 26	Si
V_SLU	2.213	SLU 80	Si
PF_SLV	0	SLV 2	No
V_SLV	0	SLV 1	No
PFFP_SLV	0	SLV 1	No
R_SLV	0	SLV 6	No

Maschio 256

Verifiche condotte secondo D.M. 17-01-18 (N.T.C.)

Dati geometrici

X ini.	Y ini.	X fin.	Y fin.	Quota i.	Quota.s	l	Sp.	h netta	h ini.	h fin.	a	a.s.,sx	a.s.,dx
-13.727	-4.696	-13.727	-3.323	L6	F1	1.373	0.28	2.809	2.467	3.151			

Caratteristiche del materiale

(Circolare 7 21-01-19 C8.5.I) Muratura in mattoni pieni e malta di calce LC2_Corti

fb	fk	fvk0	fmedio	τ0	fv0	μ	ϕ	fv,lim	E	G	FC
600000			345000	9000	20000	0.58	0.77	32500	320000000	128000000	1.2

Verifica a pressoflessione nel piano secondo D.M. 17-01-18 NTC §7.8.2.2.1 in combinazioni non sismiche, γM = 3

Comb.	Quota	N	M	σ0	Mu	c.s.	Verifica
SLU 39	12.05	-4003	-81.57	10411	2397.76	29.397	Si
SLU 39	14.52	-977	208.14	2540	649.8	3.122	Si
SLU 40	12.05	-4038	-82.16	10502	2415.63	29.402	Si
SLU 40	14.52	-953	196.73	2477	634.21	3.224	Si
SLU 19	12.05	-3722	-68.12	9679	2252.07	33.06	Si
SLU 19	14.52	-861	174.42	2240	575.24	3.298	Si
SLU 73	12.05	-4903	-72.22	12750	2839.89	39.322	Si
SLU 73	14.52	-1141	212.04	2967	755.02	3.561	Si
SLU 18	12.05	-3687	-67.53	9588	2233.71	33.078	Si
SLU 18	14.52	-886	185.84	2303	590.92	3.18	Si
SLU 60	12.05	-4606	-70.08	11978	2697.91	38.495	Si
SLU 60	14.52	-1105	221.35	2874	732.09	3.307	Si
SLU 31	12.05	-3984	-69.67	10360	2387.66	34.273	Si
SLU 31	14.52	-922	176.52	2396	614.2	3.479	Si
SLU 81	12.05	-4923	-84.12	12802	2849.19	33.87	Si
SLU 81	14.52	-1196	243.66	3111	790.09	3.243	Si
SLU 61	12.05	-4641	-70.68	12069	2714.85	38.412	Si
SLU 61	14.52	-1081	209.94	2811	716.64	3.414	Si
SLU 82	12.05	-4958	-84.72	12893	2865.65	33.827	Si
SLU 82	14.52	-1172	232.24	3048	774.74	3.336	Si

Verifica a pressoflessione nel piano secondo D.M. 17-01-18 NTC §7.8.2.2.1 in combinazioni sismiche, γM = 2

Comb.	Quota	N	M	σ0	Mu	c.s.	Verifica
SLV 9	12.05	-4284	-206.83	11141	2673.72	12.927	Si
SLV 9	14.52	-1243	487.69	3233	831.13	1.704	Si
SLV 8	12.05	-2854	132.5	7421	1840.65	13.892	Si
SLV 8	14.52	-501	-170.4	1302	340.1	1.996	Si
SLV 7	12.05	-2854	132.5	7421	1840.65	13.892	Si
SLV 7	14.52	-501	-170.4	1302	340.1	1.996	Si
SLV 5	12.05	-4263	84.01	11086	2661.81	31.683	Si
SLV 5	14.52	-1313	343.42	3414	876.23	2.552	Si
SLV 10	12.05	-4284	-206.83	11141	2673.72	12.927	Si
SLV 10	14.52	-1243	487.69	3233	831.13	1.704	Si
SLV 14	12.05	-3816	-529.19	9923	2407.45	4.549	Si

Comb.	Quota	N	M	σ0	Mu	c.s.	Verifica
SLV 14	14.52	-878	476.17	2283	591.64	1.242	Si
SLV 6	12.05	-4263	84.01	11086	2661.81	31.683	Si
SLV 6	14.52	-1313	343.42	3414	876.23	2.552	Si
SLV 13	12.05	-3816	-529.19	9923	2407.45	4.549	Si
SLV 13	14.52	-878	476.17	2283	591.64	1.242	Si
SLV 15	12.05	-3393	-514.64	8823	2161.67	4.2	Si
SLV 15	14.52	-634	322.02	1650	429.72	1.334	Si
SLV 16	12.05	-3393	-514.64	8823	2161.67	4.2	Si
SLV 16	14.52	-634	322.02	1650	429.72	1.334	Si

Verifica a taglio nel piano secondo D.M. 17-01-18 (N.T.C.) §7.8.2.2.2 con rottura per scorrimento in combinazioni non sismiche, γM = 3

Comb.	Quota	N	V par	M	σ0	σN	I'	fvd	Vt scorr.	Vt fess.diag.	Vt,lim	c.s.	Verifica
SLU 61	12.05	-4641	-316	-70.68		12069	1.3734	7165	2755			8.73	Si
SLU 61	14.52	-1081	-549	209.94		2811	1.3734	5930	2280			4.15	Si
SLU 74	12.05	-5153	-282	-65.34		13399	1.3734	7342	2823			10	Si
SLU 74	14.52	-1374	-613	245.41		3573	1.3734	6032	2320			3.78	Si
SLU 40	12.05	-4038	-365	-82.16		10502	1.3734	6956	2675			7.33	Si
SLU 40	14.52	-953	-564	196.73		2477	1.3734	5886	2263			4.02	Si
SLU 18	12.05	-3687	-349	-67.53		9588	1.3734	6834	2628			7.53	Si
SLU 18	14.52	-886	-543	185.84		2303	1.3734	5863	2254			4.16	Si
SLU 39	12.05	-4003	-417	-81.57		10411	1.3734	6944	2670			6.4	Si
SLU 39	14.52	-977	-631	208.14		2540	1.3734	5894	2267			3.59	Si
SLU 83	12.05	-5170	-280	-80.36		13445	1.3734	7348	2826			10.1	Si
SLU 83	14.52	-1305	-549	191.82		3395	1.3734	6008	2310			4.21	Si
SLU 75	12.05	-5188	-230	-65.93		13490	1.3734	7354	2828			12.31	Si
SLU 75	14.52	-1350	-546	233.99		3510	1.3734	6024	2316			4.24	Si
SLU 82	12.05	-4958	-384	-84.72		12893	1.3734	7275	2797			7.28	Si
SLU 82	14.52	-1172	-638	232.24		3048	1.3734	5962	2293			3.6	Si
SLU 60	12.05	-4606	-368	-70.08		11978	1.3734	7153	2751			7.47	Si
SLU 60	14.52	-1105	-617	221.35		2874	1.3734	5939	2284			3.7	Si
SLU 81	12.05	-4923	-437	-84.12		12802	1.3734	7262	2793			6.4	Si
SLU 81	14.52	-1196	-705	243.66		3111	1.3734	5970	2296			3.26	Si

Verifica a taglio nel piano secondo D.M. 17-01-18 (N.T.C.) §7.8.2.2.2 con rottura per scorrimento in combinazioni sismiche, γM = 2

Comb.	Quota	N	V par	M	σ0	σN	I'	fvd	Vt scorr.	Vt fess.diag.	Vt,lim	c.s.	Verifica
SLV 10	12.05	-4284	-2397	-206.83		11141	1.3734	10562	4061			1.69	Si
SLV 10	14.52	-1243	-2510	487.69		5027	0.8833	9339	2310			0.92	No, Vu<V
SLV 16	12.05	-3393	-1854	-514.64		8823	1.3734	10098	3883			2.09	Si
SLV 16	14.52	-634	-1764	322.02		4218	0.5372	9177	1380			0.78	No, Vu<V
SLV 9	12.05	-4284	-2397	-206.83		11141	1.3734	10562	4061			1.69	Si
SLV 9	14.52	-1243	-2510	487.69		5027	0.8833	9339	2310			0.92	No, Vu<V
SLV 13	12.05	-3816	-2789	-529.19		9923	1.3734	10318	3968			1.42	Si
SLV 13	14.52	-878	-2696	476.17		7241	0.433	9782	1186			0.44	No, Vu<V
SLV 15	12.05	-3393	-1854	-514.64		8823	1.3734	10098	3883			2.09	Si
SLV 15	14.52	-634	-1764	322.02		4218	0.5372	9177	1380			0.78	No, Vu<V
SLV 3	12.05	-3322	2383	454.85		8640	1.3734	10061	3869			1.62	Si
SLV 3	14.52	-866	1871	-158.88		2252	1.3734	8784	3378			1.8	Si
SLV 7	12.05	-2854	1992	132.5		7421	1.3734	9818	3775			1.9	Si
SLV 7	14.52	-501	1686	-170.4		1721	1.0389	8678	2524			1.5	Si
SLV 8	12.05	-2854	1992	132.5		7421	1.3734	9818	3775			1.9	Si
SLV 8	14.52	-501	1686	-170.4		1721	1.0389	8678	2524			1.5	Si
SLV 4	12.05	-3322	2383	454.85		8640	1.3734	10061	3869			1.62	Si
SLV 4	14.52	-866	1871	-158.88		2252	1.3734	8784	3378			1.8	Si
SLV 14	12.05	-3816	-2789	-529.19		9923	1.3734	10318	3968			1.42	Si
SLV 14	14.52	-878	-2696	476.17		7241	0.433	9782	1186			0.44	No, Vu<V

Verifica a pressoflessione fuori piano D.M. 17-01-18 (N.T.C.)

quota 13.284 Wa 0.05 denominatore 8 γM = 2

Comb.	fd	Sa	σ0	N	M	Mc	Coeff.s.	Verifica
SLV 7	143750	0.52	3783	-1455	124.21	197.33	1.59	Si
SLV 8	143750	0.52	3783	-1455	124.21	197.33	1.59	Si
SLV 12	143750	0.52	4010	-1542	124.21	208.82	1.68	Si
SLV 11	143750	0.52	4010	-1542	124.21	208.82	1.68	Si
SLV 4	143750	0.52	4708	-1811	124.21	243.71	1.96	Si
SLV 3	143750	0.52	4708	-1811	124.21	243.71	1.96	Si
SLV 15	143750	0.52	5468	-2103	124.21	281.2	2.26	Si
SLV 16	143750	0.52	5468	-2103	124.21	281.2	2.26	Si
SLV 1	143750	0.52	5730	-2203	124.21	294.01	2.37	Si
SLV 2	143750	0.52	5730	-2203	124.21	294.01	2.37	Si

Verifica dei meccanismi locali di collasso con analisi cinematica lineare

forza di aggancio al piano = 0 quota mezzeria = 13.284 Wa = 0.05 Ta = 0.0471

Comb.	N top	N base	V orto	α0	M*	e*	a0*	aLim	Verifica
SLV 12	-431	-2875	-99	0.014	218.9	0.904	0.22221	7.18106	No
SLV 11	-431	-2875	-99	0.014	218.9	0.904	0.22221	7.18106	No
SLV 8	-501	-2854	-83	0.026	224.1	0.899	0.42142	7.18106	No
SLV 7	-501	-2854	-83	0.026	224.1	0.899	0.42142	7.18106	No
SLV 5	-1313	-4263	99	0.028	295.9	0.891	0.45291	7.18106	No
SLV 6	-1313	-4263	99	0.028	295.9	0.891	0.45291	7.18106	No
SLV 10	-1243	-4284	83	0.034	289.3	0.89	0.55651	7.18106	No
SLV 9	-1243	-4284	83	0.034	289.3	0.89	0.55651	7.18106	No
SLV 15	-634	-3393	-53	0.047	234.8	0.893	0.76151	7.75114	No
SLV 16	-634	-3393	-53	0.047	234.8	0.893	0.76151	7.75114	No

Tabella dei coefficienti di sicurezza minimi

Stato limite	Coeff.s.	Comb.	Verifica
PF_SLU	3.122	SLU 39	Si
V_SLU	3.256	SLU 81	Si
PF_SLV	1.242	SLV 13	Si

Stato limite	Coeff.s.	Comb.	Verifica
V_SLV	0.44	SLV 13	No
PFFP_SLV	1.589	SLV 7	Si
R_SLV	0.031	SLV 11	No

Maschio 257

Verifiche condotte secondo D.M. 17-01-18 (N.T.C.)

Dati geometrici

X ini.	Y ini.	X fin.	Y fin.	Quota i.	Quota.s	l	Sp.	h netta	h ini.	h fin.	a	a.s.,sx	a.s.,dx
-11.003	-4.696	-11.003	-3.309	L6	F1	1.388	0.28	2.811	2.465	3.156			

Caratteristiche del materiale

(Circolare 7 21-01-19 C8.5.I) Muratura in mattoni pieni e malta di calce LC2_Corti

fb	fk	fvk0	fmedio	τ0	fv0	μ	ϕ	fv,lim	E	G	FC
600000			345000	9000	20000	0.58	0.77	32500	320000000	128000000	1.2

Verifica a pressoflessione nel piano secondo D.M. 17-01-18 NTC §7.8.2.2.1 in combinazioni non sismiche, γM = 3

Comb.	Quota	N	M	σ0	Mu	c.s.	Verifica
SLU 81	12.05	-4871	94.68	12537	2859.4	30.202	Si
SLU 81	14.51	-1245	144.54	3203	829.52	5.739	Si
SLU 52	12.05	-4516	76.7	11624	2686.3	35.025	Si
SLU 52	14.51	-1074	118.89	2763	719.65	6.053	Si
SLU 19	12.05	-3674	61.83	9456	2253.12	36.44	Si
SLU 19	14.51	-882	104.86	2271	595.19	5.676	Si
SLU 60	12.05	-4552	82.18	11716	2703.98	32.903	Si
SLU 60	14.51	-1157	136.68	2979	773.58	5.66	Si
SLU 39	12.05	-3966	78.23	10209	2406.98	30.77	Si
SLU 39	14.51	-1011	119.74	2603	679.28	5.673	Si
SLU 18	12.05	-3647	65.73	9388	2238.91	34.063	Si
SLU 18	14.51	-924	111.89	2379	622.45	5.563	Si
SLU 61	12.05	-4579	78.28	11785	2717.13	34.71	Si
SLU 61	14.51	-1116	129.66	2871	746.74	5.759	Si
SLU 82	12.05	-4898	90.78	12606	2872.18	31.64	Si
SLU 82	14.51	-1203	137.51	3096	802.84	5.838	Si
SLU 10	12.05	-3612	60.25	9296	2219.81	36.845	Si
SLU 10	14.51	-841	94.1	2163	567.67	6.033	Si
SLU 40	12.05	-3993	74.33	10277	2420.82	32.57	Si
SLU 40	14.51	-970	112.71	2496	652.18	5.786	Si

Verifica a pressoflessione nel piano secondo D.M. 17-01-18 NTC §7.8.2.2.1 in combinazioni sismiche, γM = 2

Comb.	Quota	N	M	σ0	Mu	c.s.	Verifica
SLV 3	12.05	-3330	-399.09	8571	2148.21	5.383	Si
SLV 3	14.51	-593	269.92	1526	406.22	1.505	Si
SLV 7	12.05	-2718	-1.36	6996	1777.84	1000	Si
SLV 7	14.51	-282	-154.87	725	194.3	1.255	Si
SLV 6	12.05	-4363	-150.72	11229	2748.62	18.237	Si
SLV 6	14.51	-1455	514.13	3746	978.83	1.904	Si
SLV 2	12.05	-3823	-443.9	9840	2438.92	5.494	Si
SLV 2	14.51	-945	470.62	2432	642.6	1.365	Si
SLV 12	12.05	-2687	294.74	6916	1758.77	5.967	Si
SLV 12	14.51	-367	-318.29	0	0	0	No, e>l/2
SLV 4	12.05	-3330	-399.09	8571	2148.21	5.383	Si
SLV 4	14.51	-593	269.92	1526	406.22	1.505	Si
SLV 11	12.05	-2687	294.74	6916	1758.77	5.967	Si
SLV 11	14.51	-367	-318.29	0	0	0	No, e>l/2
SLV 8	12.05	-2718	-1.36	6996	1777.84	1000	Si
SLV 8	14.51	-282	-154.87	725	194.3	1.255	Si
SLV 1	12.05	-3823	-443.9	9840	2438.92	5.494	Si
SLV 1	14.51	-945	470.62	2432	642.6	1.365	Si
SLV 5	12.05	-4363	-150.72	11229	2748.62	18.237	Si
SLV 5	14.51	-1455	514.13	3746	978.83	1.904	Si

Verifica a taglio nel piano secondo D.M. 17-01-18 (N.T.C.) §7.8.2.2.2 con rottura per scorrimento in combinazioni non sismiche, γM = 3

Comb.	Quota	N	V par	M	σ0	σN	l'	fvd	Vt scorr.	Vt fess.diag.	Vt,lim	c.s.	Verifica
SLU 29	12.05	-4186	646	103.74		10773	1.3876	6992	2717			4.21	Si
SLU 29	14.51	-1177	320	-5.11		3029	1.3876	5959	2315			7.23	Si
SLU 80	12.05	-5304	673	113.93		13652	1.3876	7376	2866			4.26	Si
SLU 80	14.51	-1401	304	26.84		3607	1.3876	6036	2345			7.72	Si
SLU 70	12.05	-5177	671	119.21		13325	1.3876	7332	2849			4.25	Si
SLU 70	14.51	-1456	247	75		3747	1.3876	6055	2353			9.53	Si
SLU 72	12.05	-5117	733	116.3		13171	1.3876	7312	2841			3.87	Si
SLU 72	14.51	-1368	363	12.66		3521	1.3876	6025	2341			6.44	Si
SLU 8	12.05	-3867	622	91.25		9952	1.3876	6883	2674			4.3	Si
SLU 8	14.51	-1089	332	-12.97		2804	1.3876	5929	2304			6.94	Si
SLU 9	12.05	-3893	650	87.35		10021	1.3876	6892	2678			4.12	Si
SLU 9	14.51	-1048	376	-19.99		2697	1.3876	5915	2298			6.12	Si
SLU 50	12.05	-4772	682	107.7		12281	1.3876	7193	2795			4.1	Si
SLU 50	14.51	-1323	332	11.83		3404	1.3876	6009	2335			7.04	Si
SLU 51	12.05	-4798	710	103.8		12350	1.3876	7202	2798			3.94	Si
SLU 51	14.51	-1281	375	4.8		3297	1.3876	5995	2329			6.21	Si
SLU 30	12.05	-4212	674	99.85		10842	1.3876	7001	2720			4.04	Si
SLU 30	14.51	-1135	364	-12.14		2921	1.3876	5945	2310			6.35	Si
SLU 71	12.05	-5091	705	120.19		13102	1.3876	7303	2837			4.02	Si
SLU 71	14.51	-1410	320	19.68		3629	1.3876	6039	2346			7.34	Si

Verifica a taglio nel piano secondo D.M. 17-01-18 (N.T.C.) §7.8.2.2.2 con rottura per scorrimento in combinazioni sismiche, γM = 2

Comb.	Quota	N	V par	M	σ0	σN	l'	fvd	Vt scorr.	Vt fess.diag.	Vt,lim	c.s.	Verifica
SLV 1	12.05	-3823	-2478	-443.9		9840	1.3876	10301	4002			1.61	Si
SLV 1	14.51	-945	-2346	470.62		5746	0.5874	9483	1560			0.66	No, Vu<V
SLV 4	12.05	-3330	-1398	-399.09		8571	1.3876	10047	3904			2.79	Si
SLV 4	14.51	-593	-1443	269.92		2959	0.7156	8925	1788			1.24	Si
SLV 2	12.05	-3823	-2478	-443.9		9840	1.3876	10301	4002			1.61	Si
SLV 2	14.51	-945	-2346	470.62		5746	0.5874	9483	1560			0.66	No, Vu<V
SLV 11	12.05	-2687	2661	294.74		6916	1.3876	9717	3775			1.42	Si
SLV 11	14.51	-367	2026	-318.29		0	0	8333	0			0	No, Vu<V
SLV 16	12.05	-3226	2909	587.91		8304	1.3876	9994	3883			1.33	Si
SLV 16	14.51	-878	2275	-274.78		2744	1.142	8882	2840			1.25	Si
SLV 8	12.05	-2718	1369	-1.36		6996	1.3876	9733	3781			2.76	Si
SLV 8	14.51	-282	910	-154.87		2328	0.4321	8799	1065			1.17	Si
SLV 7	12.05	-2718	1369	-1.36		6996	1.3876	9733	3781			2.76	Si
SLV 7	14.51	-282	910	-154.87		2328	0.4321	8799	1065			1.17	Si
SLV 15	12.05	-3226	2909	587.91		8304	1.3876	9994	3883			1.33	Si
SLV 15	14.51	-878	2275	-274.78		2744	1.142	8882	2840			1.25	Si
SLV 3	12.05	-3330	-1398	-399.09		8571	1.3876	10047	3904			2.79	Si
SLV 3	14.51	-593	-1443	269.92		2959	0.7156	8925	1788			1.24	Si
SLV 12	12.05	-2687	2661	294.74		6916	1.3876	9717	3775			1.42	Si
SLV 12	14.51	-367	2026	-318.29		0	0	8333	0			0	No, Vu<V

Verifica a pressoflessione fuori piano D.M. 17-01-18 (N.T.C.)

quota 13.282 Wa 0.05 denominatore 8 γM = 2

Comb.	fd	Sa	σ0	N	M	Mc	Coeff.s.	Verifica
SLV 11	143750	0.52	3461	-1345	125.61	182.93	1.46	Si
SLV 12	143750	0.52	3461	-1345	125.61	182.93	1.46	Si
SLV 8	143750	0.52	3658	-1421	125.61	193.04	1.54	Si
SLV 7	143750	0.52	3658	-1421	125.61	193.04	1.54	Si
SLV 16	143750	0.52	4482	-1741	125.61	234.84	1.87	Si
SLV 15	143750	0.52	4482	-1741	125.61	234.84	1.87	Si
SLV 3	143750	0.52	5139	-1997	125.61	267.8	2.13	Si
SLV 4	143750	0.52	5139	-1997	125.61	267.8	2.13	Si
SLV 14	143750	0.52	5554	-2158	125.61	288.36	2.3	Si
SLV 13	143750	0.52	5554	-2158	125.61	288.36	2.3	Si

Verifica dei meccanismi locali di collasso con analisi cinematica lineare

forza di aggancio al piano = 0 quota mezzeria = 13.282 Wa = 0.05 Ta = 0.0471

Comb.	N top	N base	V orto	α0	M*	e*	a0*	aLim	Verifica
SLV 7	-282	-2718	83	0.023	210.8	0.92	0.36607	7.18458	No
SLV 8	-282	-2718	83	0.023	210.8	0.92	0.36607	7.18458	No
SLV 11	-367	-2687	76	0.03	216.4	0.91	0.47658	7.18458	No
SLV 12	-367	-2687	76	0.03	216.4	0.91	0.47658	7.18458	No
SLV 9	-1541	-4332	-80	0.038	319.5	0.894	0.61285	7.18458	No
SLV 10	-1541	-4332	-80	0.038	319.5	0.894	0.61285	7.18458	No
SLV 5	-1455	-4363	-73	0.04	311.3	0.893	0.65153	7.18458	No
SLV 6	-1455	-4363	-73	0.04	311.3	0.893	0.65153	7.18458	No
SLV 14	-1230	-3720	-33	0.057	289.9	0.89	0.93128	7.75555	No
SLV 13	-1230	-3720	-33	0.057	289.9	0.89	0.93128	7.75555	No

Tabella dei coefficienti di sicurezza minimi

Stato limite	Coeff.s.	Comb.	Verifica
PF_SLU	5.563	SLU 18	Si
V_SLU	3.874	SLU 72	Si
PF_SLV	0	SLV 11	No
V_SLV	0	SLV 11	No
PFFP_SLV	1.456	SLV 11	Si
R_SLV	0.051	SLV 7	No

Maschio 258

Verifiche condotte secondo D.M. 17-01-18 (N.T.C.)

Dati geometrici

X ini.	Y ini.	X fin.	Y fin.	Quota i.	Quota.s	l	Sp.	h netta	h ini.	h fin.	a	a.s.,sx	a.s.,dx
-11.003	-4.696	-9.867	-4.697	L6	F1	1.136	0.3	2.465	2.465	2.464			

Caratteristiche del materiale

(Circolare 7 21-01-19 C8.5.I) Muratura in mattoni pieni e malta di calce LC2_Corti

fb	fk	fvk0	fmedio	τ0	fv0	μ	ϕ	fv,lim	E	G	FC
600000			345000	9000	20000	0.58	0.77	32500	320000000	128000000	1.2

Verifica a pressoflessione nel piano secondo D.M. 17-01-18 NTC §7.8.2.2.1 in combinazioni non sismiche, γM = 3

Comb.	Quota	N	M	σ0	Mu	c.s.	Verifica
SLU 65	12.05	-3753	-416.6	11013	1843.6	4.425	Si
SLU 65	14.02	-2143	388.68	6289	1123.38	2.89	Si
SLU 2	12.05	-2854	-299.36	8375	1454.49	4.859	Si
SLU 2	14.02	-1606	300.81	4713	859.45	2.857	Si
SLU 34	12.05	-3347	-451.6	9821	1671.9	3.702	Si
SLU 34	14.02	-2227	407.24	6534	1163.38	2.857	Si
SLU 76	12.05	-4121	-497.96	12093	1993.31	4.003	Si
SLU 76	14.02	-2604	464.35	7639	1340.11	2.886	Si
SLU 13	12.05	-3222	-380.72	9455	1617.74	4.249	Si
SLU 13	14.02	-2066	376.49	6063	1086.3	2.885	Si
SLU 10	12.05	-2803	-371.3	8226	1431.45	3.855	Si

Comb.	Quota	N	M	σ0	Mu	c.s.	Verifica
SLU 10	14.02	-1600	303.03	4695	856.45	2.826	Si
SLU 31	12.05	-2928	-442.18	8592	1487.76	3.365	Si
SLU 31	14.02	-1761	333.78	5166	936.6	2.806	Si
SLU 23	12.05	-2979	-370.24	8742	1510.53	4.08	Si
SLU 23	14.02	-1767	331.56	5184	939.56	2.834	Si
SLU 73	12.05	-3702	-488.54	10864	1822.43	3.73	Si
SLU 73	14.02	-2137	390.89	6271	1120.51	2.867	Si
SLU 26	12.05	-3398	-379.66	9971	1693.81	4.461	Si
SLU 26	14.02	-2233	405.02	6552	1166.23	2.879	Si

Verifica a pressoflessione nel piano secondo D.M. 17-01-18 NTC §7.8.2.2.1 in combinazioni sismiche, γM = 2

Comb.	Quota	N	M	σ0	Mu	c.s.	Verifica
SLV 15	12.05	-696	-705.02	0	0	0	No, e>l/2
SLV 15	14.02	-255	240.71	0	0	0	No, e>l/2
SLV 8	12.05	-3319	-715.54	9738	1734.7	2.424	Si
SLV 8	14.02	-2831	872.53	8308	1498.86	1.718	Si
SLV 16	12.05	-696	-705.02	0	0	0	No, e>l/2
SLV 16	14.02	-255	240.71	0	0	0	No, e>l/2
SLV 9	12.05	-2170	162.87	6367	1168.34	7.173	Si
SLV 9	14.02	-135	-402.65	0	0	0	No, e>l/2
SLV 10	12.05	-2170	162.87	6367	1168.34	7.173	Si
SLV 10	14.02	-135	-402.65	0	0	0	No, e>l/2
SLV 14	12.05	-718	-392.46	2107	400.8	1.021	Si
SLV 14	14.02	284	-111.21	0	0	0	No, Trazione
SLV 11	12.05	-2096	-878.99	6151	1130.66	1.286	Si
SLV 11	14.02	-1933	770.42	5672	1046.9	1.359	Si
SLV 7	12.05	-3319	-715.54	9738	1734.7	2.424	Si
SLV 7	14.02	-2831	872.53	8308	1498.86	1.718	Si
SLV 13	12.05	-718	-392.46	2107	400.8	1.021	Si
SLV 13	14.02	284	-111.21	0	0	0	No, Trazione
SLV 12	12.05	-2096	-878.99	6151	1130.66	1.286	Si
SLV 12	14.02	-1933	770.42	5672	1046.9	1.359	Si

Verifica a taglio nel piano secondo D.M. 17-01-18 (N.T.C.) §7.8.2.2.2 con rottura per scorrimento in combinazioni non sismiche, γM = 3

Comb.	Quota	N	V par	M	σ0	σN	I'	fvd	Vt scorr.	Vt fess.diag.	Vt,lim	c.s.	Verifica
SLU 36	12.05	-3682	-994	-433.31		10804	1.136	6996	2384			2.4	Si
SLU 36	14.02	-2561	-462	435.35		7516	1.136	6558	2235			4.83	Si
SLU 72	12.05	-4539	-1044	-409.9		13318	1.136	7331	2498			2.39	Si
SLU 72	14.02	-3009	-523	505.48		8829	1.136	6733	2295			4.39	Si
SLU 76	12.05	-4121	-1111	-497.96		12093	1.136	7168	2443			2.2	Si
SLU 76	14.02	-2604	-400	464.35		7639	1.136	6574	2240			5.61	Si
SLU 38	12.05	-3714	-1019	-435.49		10897	1.136	7008	2388			2.34	Si
SLU 38	14.02	-2626	-490	450.58		7706	1.136	6583	2243			4.58	Si
SLU 80	12.05	-4488	-1132	-481.85		13168	1.136	7311	2492			2.2	Si
SLU 80	14.02	-3003	-538	507.7		8812	1.136	6730	2294			4.27	Si
SLU 84	12.05	-4047	-1076	-503.26		11875	1.136	7139	2433			2.26	Si
SLU 84	14.02	-2534	-421	435.19		7436	1.136	6547	2231			5.3	Si
SLU 34	12.05	-3347	-999	-451.6		9821	1.136	6865	2340			2.34	Si
SLU 34	14.02	-2227	-352	407.24		6534	1.136	6427	2190			6.23	Si
SLU 73	12.05	-3702	-1017	-488.54		10864	1.136	7004	2387			2.35	Si
SLU 73	14.02	-2137	-276	390.89		6271	1.136	6392	2178			7.89	Si
SLU 68	12.05	-4172	-1023	-426.02		12242	1.136	7188	2450			2.39	Si
SLU 68	14.02	-2609	-385	462.14		7657	1.136	6576	2241			5.82	Si
SLU 78	12.05	-4456	-1107	-479.66		13076	1.136	7299	2487			2.25	Si
SLU 78	14.02	-2938	-510	492.46		8621	1.136	6705	2285			4.48	Si

Verifica a taglio nel piano secondo D.M. 17-01-18 (N.T.C.) §7.8.2.2.2 con rottura per scorrimento in combinazioni sismiche, γM = 2

Comb.	Quota	N	V par	M	σ0	σN	I'	fvd	Vt scorr.	Vt fess.diag.	Vt,lim	c.s.	Verifica
SLV 9	12.05	-2170	1181	162.87		6367	1.136	9607	3274			2.77	Si
SLV 9	14.02	-135	-770	-402.65		0	0	8333	0			0	No, Vu<V
SLV 12	12.05	-2096	-1915	-878.99		15667	0.446	11467	1534			0.8	No, Vu<V
SLV 12	14.02	-1933	-299	770.42		12677	0.5082	10869	1657			5.54	Si
SLV 15	12.05	-696	-350	-705.02		0	0	8333	0			0	No, Vu<V
SLV 15	14.02	-255	-1187	240.71		0	0	8333	0			0	No, Vu<V
SLV 16	12.05	-696	-350	-705.02		0	0	8333	0			0	No, Vu<V
SLV 16	14.02	-255	-1187	240.71		0	0	8333	0			0	No, Vu<V
SLV 13	12.05	-718	579	-392.46		37279	0.0642	15789	304			0.53	No, Vu<V
SLV 13	14.02	284	-1328	-111.21		0	0	8333	0			0	No, Vu<V
SLV 14	12.05	-718	579	-392.46		37279	0.0642	15789	304			0.53	No, Vu<V
SLV 14	14.02	284	-1328	-111.21		0	0	8333	0			0	No, Vu<V
SLV 10	12.05	-2170	1181	162.87		6367	1.136	9607	3274			2.77	Si
SLV 10	14.02	-135	-770	-402.65		0	0	8333	0			0	No, Vu<V
SLV 7	12.05	-3319	-2327	-715.54		10464	1.0571	10426	3307			1.42	Si
SLV 7	14.02	-2831	321	872.53		12108	0.7795	10755	2515			7.84	Si
SLV 8	12.05	-3319	-2327	-715.54		10464	1.0571	10426	3307			1.42	Si
SLV 8	14.02	-2831	321	872.53		12108	0.7795	10755	2515			7.84	Si
SLV 11	12.05	-2096	-1915	-878.99		15667	0.446	11467	1534			0.8	No, Vu<V
SLV 11	14.02	-1933	-299	770.42		12677	0.5082	10869	1657			5.54	Si

Verifica a pressoflessione fuori piano D.M. 17-01-18 (N.T.C.)

quota 13.282 Wa 0.05 denominatore 8 γM = 2

Comb.	fd	Sa	σ0	N	M	Mc	Coeff.s.	Verifica
SLV 10	143750	0.52	0	110	82.66	0	0	No, Trazione
SLV 14	143750	0.52	0	285	82.66	0	0	No, Trazione
SLV 9	143750	0.52	0	110	82.66	0	0	No, Trazione
SLV 13	143750	0.52	0	285	82.66	0	0	No, Trazione
SLV 16	143750	0.52	2824	-962	82.66	141.03	1.71	Si
SLV 15	143750	0.52	2824	-962	82.66	141.03	1.71	Si
SLV 5	143750	0.52	3777	-1287	82.66	187.09	2.26	Si

Comb.	fd	Sa	σ0	N	M	Mc	Coeff.s.	Verifica
SLV 6	143750	0.52	3777	-1287	82.66	187.09	2.26	Si
SLV 11	143750	0.52	11878	-4048	82.66	548.19	6.63	Si
SLV 12	143750	0.52	11878	-4048	82.66	548.19	6.63	Si

Verifica dei meccanismi locali di collasso con analisi cinematica lineare

forza di aggancio al piano = 0 quota mezzeria = 13.282 Wa = 0.05 Ta = 0.0338

Comb.	N top	N base	V orto	α0	M*	e*	a0*	aLim	Verifica
SLV 9	325	-2170	20	0	0	0	0	6.11938	No, Trazione
SLV 14	307	-718	-18	0	0	0	0	6.44923	No, Trazione
SLV 10	325	-2170	20	0	0	0	0	6.11938	No, Trazione
SLV 13	307	-718	-18	0	0	0	0	6.44923	No, Trazione
SLV 1	-1454	-4793	36	0.065	271.8	0.899	1.0575	6.44923	No
SLV 2	-1454	-4793	36	0.065	271.8	0.899	1.0575	6.44923	No
SLV 12	-1487	-2096	-35	0.066	275	0.9	1.06164	6.11938	No
SLV 11	-1487	-2096	-35	0.066	275	0.9	1.06164	6.11938	No
SLV 3	-1998	-4771	19	0.071	325.4	0.909	1.12717	6.44923	No
SLV 4	-1998	-4771	19	0.071	325.4	0.909	1.12717	6.44923	No

Tabella dei coefficienti di sicurezza minimi

Stato limite	Coeff.s.	Comb.	Verifica
PF_SLU	2.806	SLU 31	Si
V_SLU	2.198	SLU 76	Si
PF_SLV	0	SLV 14	No
V_SLV	0	SLV 9	No
PFFP_SLV	0	SLV 14	No
R_SLV	0	SLV 14	No

Maschio 259

Verifiche condotte secondo D.M. 17-01-18 (N.T.C.)

Dati geometrici

X ini.	Y ini.	X fin.	Y fin.	Quota i.	Quota.s	l	Sp.	h netta	h ini.	h fin.	a	a.s.,sx	a.s.,dx
-8.027	-4.697	-7.763	-4.697	L6	F1	0.264	0.3	2.462	2.463	2.462			

Caratteristiche del materiale

(Circolare 7 21-01-19 C8.5.I) Muratura in mattoni pieni e malta di calce LC2_Corti

fb	fk	fvk0	fmedio	τ0	fv0	μ	ϕ	fv,lim	E	G	FC
600000			345000	9000	20000	0.58	0.77	32500	320000000	128000000	1.2

Verifica a pressoflessione nel piano secondo D.M. 17-01-18 NTC §7.8.2.2.1 in combinazioni non sismiche, γM = 3

Comb.	Quota	N	M	σ0	Mu	c.s.	Verifica
SLU 19	12.05	-1694	-5.42	21385	164.9	30.428	Si
SLU 19	14.02	-40	9.15	0	0	0	No, e>l/2
SLU 13	12.05	-2187	-29.16	27609	190.84	6.544	Si
SLU 13	14.02	-22	12.09	0	0	0	No, e>l/2
SLU 65	12.05	-2391	-37.3	30188	198.67	5.326	Si
SLU 65	14.02	-37	15.9	0	0	0	No, e>l/2
SLU 26	12.05	-2239	-38.17	28270	193	5.057	Si
SLU 26	14.02	-91	14.34	0	0	0	No, e>l/2
SLU 10	12.05	-2010	-25.29	25381	182.69	7.224	Si
SLU 10	14.02	157	10.51	0	0	0	No, Trazione
SLU 52	12.05	-2339	-28.29	29528	196.83	6.957	Si
SLU 52	14.02	31	13.65	0	0	0	No, Trazione
SLU 23	12.05	-2063	-34.3	26041	185.24	5.401	Si
SLU 23	14.02	89	12.76	0	0	0	No, Trazione
SLU 31	12.05	-2083	-20.39	26294	186.18	9.13	Si
SLU 31	14.02	139	10.92	0	0	0	No, Trazione
SLU 5	12.05	-2167	-43.06	27356	189.98	4.412	Si
SLU 5	14.02	-72	13.93	0	0	0	No, e>l/2
SLU 44	12.05	-2319	-42.2	29275	196.09	4.647	Si
SLU 44	14.02	-19	15.49	0	0	0	No, e>l/2

Verifica a pressoflessione nel piano secondo D.M. 17-01-18 NTC §7.8.2.2.1 in combinazioni sismiche, γM = 2

Comb.	Quota	N	M	σ0	Mu	c.s.	Verifica
SLV 4	12.05	-3030	-352.61	38255	274.76	0.779	No, M>Mu
SLV 4	14.02	1348	-20.71	0	0	0	No, Trazione
SLV 1	12.05	253	-93.21	0	0	0	No, Trazione
SLV 1	14.02	-1291	-32.85	16296	147.66	4.496	Si
SLV 6	12.05	4212	366.13	0	0	0	No, Trazione
SLV 6	14.02	-4691	-20.9	59223	319.1	15.269	Si
SLV 2	12.05	253	-93.21	0	0	0	No, Trazione
SLV 2	14.02	-1291	-32.85	16296	147.66	4.496	Si
SLV 8	12.05	-6730	-498.54	84973	270.6	0.543	No, M>Mu
SLV 8	14.02	4106	19.55	0	0	0	No, Trazione
SLV 7	12.05	-6730	-498.54	84973	270.6	0.543	No, M>Mu
SLV 7	14.02	4106	19.55	0	0	0	No, Trazione
SLV 10	12.05	4322	500.45	0	0	0	No, Trazione
SLV 10	14.02	-4966	1.48	62701	319.18	216.237	Si
SLV 5	12.05	4212	366.13	0	0	0	No, Trazione
SLV 5	14.02	-4691	-20.9	59223	319.1	15.269	Si
SLV 3	12.05	-3030	-352.61	38255	274.76	0.779	No, M>Mu
SLV 3	14.02	1348	-20.71	0	0	0	No, Trazione
SLV 9	12.05	4322	500.45	0	0	0	No, Trazione
SLV 9	14.02	-4966	1.48	62701	319.18	216.237	Si

Verifica a taglio nel piano secondo D.M. 17-01-18 (N.T.C.) §7.8.2.2.2 con rottura per scorrimento in combinazioni non sismiche, γM = 3

Comb.	Quota	N	V par	M	σ0	σN	l'	fvd	Vt scorr.	Vt fess.diag.	Vt,lim	c.s.	Verifica
SLU 23	12.05	-2063	-202	-34.3		26041	0.264	9028	715			3.54	Si
SLU 23	14.02	89	68	12.76		0	0	5556	0			0	No, Vu<V
SLU 44	12.05	-2319	-211	-42.2		29275	0.264	9459	749			3.55	Si
SLU 44	14.02	-19	78	15.49		0	0	5556	0			0	No, Vu<V
SLU 19	12.05	-1694	-131	-5.42		21385	0.264	8407	666			5.1	Si
SLU 19	14.02	-40	57	9.15		0	0	5556	0			0	No, Vu<V
SLU 73	12.05	-2411	-210	-23.4		30441	0.264	9614	762			3.63	Si
SLU 73	14.02	13	81	14.06		0	0	5556	0			0	No, Vu<V
SLU 31	12.05	-2083	-198	-20.39		26294	0.264	9061	718			3.62	Si
SLU 31	14.02	139	65	10.92		0	0	5556	0			0	No, Vu<V
SLU 5	12.05	-2167	-197	-43.06		27356	0.264	9203	729			3.69	Si
SLU 5	14.02	-72	80	13.93		0	0	5556	0			0	No, Vu<V
SLU 13	12.05	-2187	-194	-29.16		27609	0.264	9237	732			3.78	Si
SLU 13	14.02	-22	76	12.09		0	0	5556	0			0	No, Vu<V
SLU 26	12.05	-2239	-200	-38.17		28270	0.264	9325	739			3.7	Si
SLU 26	14.02	-91	86	14.34		0	0	5556	0			0	No, Vu<V
SLU 10	12.05	-2010	-196	-25.29		25381	0.264	8940	708			3.61	Si
SLU 10	14.02	157	59	10.51		0	0	5556	0			0	No, Vu<V
SLU 65	12.05	-2391	-213	-37.3		30188	0.264	9581	759			3.56	Si
SLU 65	14.02	-37	85	15.9		0	0	5556	0			0	No, Vu<V

Verifica a taglio nel piano secondo D.M. 17-01-18 (N.T.C.) §7.8.2.2.2 con rottura per scorrimento in combinazioni sismiche, γM = 2

Comb.	Quota	N	V par	M	σ0	σN	l'	fvd	Vt scorr.	Vt fess.diag.	Vt,lim	c.s.	Verifica
SLV 5	12.05	4212	1145	366.13		0	0	8333	0			0	No, Vu<V
SLV 5	14.02	-4691	-44	-20.9		59223	0.264	16250	1287			29.35	Si
SLV 10	12.05	4322	1346	500.45		0	0	8333	0			0	No, Vu<V
SLV 10	14.02	-4966	-104	1.48		62701	0.264	16250	1287			12.34	Si
SLV 8	12.05	-6730	-1426	-498.54		129074	0.1738	16250	847			0.59	No, Vu<V
SLV 8	14.02	4106	228	19.55		0	0	8333	0			0	No, Vu<V
SLV 9	12.05	4322	1346	500.45		0	0	8333	0			0	No, Vu<V
SLV 9	14.02	-4966	-104	1.48		62701	0.264	16250	1287			12.34	Si
SLV 3	12.05	-3030	-762	-352.61		215278	0.0469	16250	229			0.3	No, Vu<V
SLV 3	14.02	1348	204	-20.71		0	0	8333	0			0	No, Vu<V
SLV 2	12.05	253	9	-93.21		0	0	8333	0			0	No, Vu<V
SLV 2	14.02	-1291	122	-32.85		16296	0.264	11592	918			7.53	Si
SLV 7	12.05	-6730	-1426	-498.54		129074	0.1738	16250	847			0.59	No, Vu<V
SLV 7	14.02	4106	228	19.55		0	0	8333	0			0	No, Vu<V
SLV 4	12.05	-3030	-762	-352.61		215278	0.0469	16250	229			0.3	No, Vu<V
SLV 4	14.02	1348	204	-20.71		0	0	8333	0			0	No, Vu<V
SLV 6	12.05	4212	1145	366.13		0	0	8333	0			0	No, Vu<V
SLV 6	14.02	-4691	-44	-20.9		59223	0.264	16250	1287			29.35	Si
SLV 1	12.05	253	9	-93.21		0	0	8333	0			0	No, Vu<V
SLV 1	14.02	-1291	122	-32.85		16296	0.264	11592	918			7.53	Si

Verifica a pressoflessione fuori piano D.M. 17-01-18 (N.T.C.)

quota 13.281 Wa 0.05 denominatore 8 γM = 2

Comb.	fd	Sa	σ0	N	M	Mc	Coeff.s.	Verifica
SLV 8	143750	0.52	0	1419	19.18	0	0	No, Trazione
SLV 7	143750	0.52	0	1419	19.18	0	0	No, Trazione
SLV 3	143750	0.52	0	357	19.18	0	0	No, Trazione
SLV 11	143750	0.52	0	1127	19.18	0	0	No, Trazione
SLV 4	143750	0.52	0	357	19.18	0	0	No, Trazione
SLV 12	143750	0.52	0	1127	19.18	0	0	No, Trazione
SLV 16	143750	0.52	7820	-619	19.18	86.96	4.53	Si
SLV 15	143750	0.52	7820	-619	19.18	86.96	4.53	Si
SLV 2	143750	0.52	10693	-847	19.18	115.92	6.04	Si
SLV 1	143750	0.52	10693	-847	19.18	115.92	6.04	Si

Verifica dei meccanismi locali di collasso con analisi cinematica lineare

forza di aggancio al piano = 0 quota mezzeria = 13.281 Wa = 0.05 Ta = 0.0338

Comb.	N top	N base	V orto	α0	M*	e*	a0*	aLim	Verifica
SLV 6	-1721	4212	-47	0	0	0	0	6.11499	No, Trazione
SLV 2	-374	253	-7	0	0	0	0	6.44395	No, Trazione
SLV 3	587	-3030	22	0	0	0	0	6.44395	No, Trazione
SLV 4	587	-3030	22	0	0	0	0	6.44395	No, Trazione
SLV 7	1481	-6730	51	0	0	0	0	6.11499	No, Trazione
SLV 8	1481	-6730	51	0	0	0	0	6.11499	No, Trazione
SLV 10	-1916	4322	-51	0	0	0	0	6.11499	No, Trazione
SLV 1	-374	253	-7	0	0	0	0	6.44395	No, Trazione
SLV 9	-1916	4322	-51	0	0	0	0	6.11499	No, Trazione
SLV 5	-1721	4212	-47	0	0	0	0	6.11499	No, Trazione

Tabella dei coefficienti di sicurezza minimi

Stato limite	Coeff.s.	Comb.	Verifica
PF_SLU	0	SLU 73	No
V_SLU	0	SLU 2	No
PF_SLV	0	SLV 16	No
V_SLV	0	SLV 1	No
PFFP_SLV	0	SLV 12	No
R_SLV	0	SLV 14	No

Maschio 260

Verifiche condotte secondo D.M. 17-01-18 (N.T.C.)

Dati geometrici

X ini.	Y ini.	X fin.	Y fin.	Quota i.	Quota.s	l	Sp.	h netta	h ini.	h fin.	a	a.s.,sx	a.s.,dx
-7.763	-4.547	-7.763	-4.399	L6	F1	0.148	0.28	2.574	2.537	2.611			

Caratteristiche del materiale

(Circolare 7 21-01-19 C8.5.I) Muratura in mattoni pieni e malta di calce LC2_Corti

fb	fk	fvk0	fmedio	τ0	fv0	μ	ϕ	fv,lim	E	G	FC
600000			345000	9000	20000	0.58	0.77	32500	320000000	128000000	1.2

Verifica a pressoflessione nel piano secondo D.M. 17-01-18 NTC §7.8.2.2.1 in combinazioni non sismiche, γM = 3

Comb.	Quota	N	M	σ0	Mu	c.s.	Verifica
SLU 38	12.05	-303	-74.79	0	0	0	No, e>l/2
SLU 38	14.02	-776	7.8	18745	44.16	5.66	Si
SLU 49	12.05	-392	-72.94	0	0	0	No, e>l/2
SLU 49	14.02	-810	6.76	19563	45.49	6.728	Si
SLU 51	12.05	-406	-71.08	0	0	0	No, e>l/2
SLU 51	14.02	-809	6.32	19545	45.46	7.188	Si
SLU 40	12.05	-114	-85.27	0	0	0	No, e>l/2
SLU 40	14.02	-707	10.6	17069	41.28	3.894	Si
SLU 34	12.05	2	-117.65	0	0	0	No, Trazione
SLU 34	14.02	-919	14.99	22189	49.4	3.296	Si
SLU 46	12.05	-299	-77.1	0	0	0	No, e>l/2
SLU 46	14.02	-770	7.95	18596	43.91	5.525	Si
SLU 36	12.05	-289	-76.65	0	0	0	No, e>l/2
SLU 36	14.02	-777	8.24	18763	44.19	5.364	Si
SLU 44	12.05	-8	-118.09	0	0	0	No, e>l/2
SLU 44	14.02	-912	14.7	22021	49.17	3.345	Si
SLU 42	12.05	-207	-81.11	0	0	0	No, e>l/2
SLU 42	14.02	-747	9.42	18036	42.97	4.564	Si
SLU 47	12.05	-101	-113.94	0	0	0	No, e>l/2
SLU 47	14.02	-952	13.51	22989	50.49	3.737	Si

Verifica a pressoflessione nel piano secondo D.M. 17-01-18 NTC §7.8.2.2.1 in combinazioni sismiche, γM = 2

Comb.	Quota	N	M	σ0	Mu	c.s.	Verifica
SLV 1	12.05	-947	130.88	0	0	0	No, e>l/2
SLV 1	14.02	93	-14.91	0	0	0	No, Trazione
SLV 9	12.05	-4989	784.68	0	0	0	No, e>l/2
SLV 9	14.02	3579	-123.92	0	0	0	No, Trazione
SLV 5	12.05	-4523	734.64	0	0	0	No, e>l/2
SLV 5	14.02	3185	-111.75	0	0	0	No, Trazione
SLV 2	12.05	-947	130.88	0	0	0	No, e>l/2
SLV 2	14.02	93	-14.91	0	0	0	No, Trazione
SLV 7	12.05	4140	-823.55	0	0	0	No, Trazione
SLV 7	14.02	-4334	124.38	104709	45.83	0.368	No, M>Mu
SLV 10	12.05	-4989	784.68	0	0	0	No, e>l/2
SLV 10	14.02	3579	-123.92	0	0	0	No, Trazione
SLV 3	12.05	1652	-336.58	0	0	0	No, Trazione
SLV 3	14.02	-2163	55.93	52248	91.51	1.636	Si
SLV 4	12.05	1652	-336.58	0	0	0	No, Trazione
SLV 4	14.02	-2163	55.93	52248	91.51	1.636	Si
SLV 6	12.05	-4523	734.64	0	0	0	No, e>l/2
SLV 6	14.02	3185	-111.75	0	0	0	No, Trazione
SLV 8	12.05	4140	-823.55	0	0	0	No, Trazione
SLV 8	14.02	-4334	124.38	104709	45.83	0.368	No, M>Mu

Verifica a taglio nel piano secondo D.M. 17-01-18 (N.T.C.) §7.8.2.2.2 con rottura per scorrimento in combinazioni non sismiche, γM = 3

Comb.	Quota	N	V par	M	σ0	σN	l'	fvd	Vt scorr.	Vt fess.diag.	Vt,lim	c.s.	Verifica
SLU 47	12.05	-101	-356	-113.94		0	0	5556	0			0	No, Vu<V
SLU 47	14.02	-952	92	13.51		22989	0.1478	8621	357			3.86	Si
SLU 36	12.05	-289	-244	-76.65		0	0	5556	0			0	No, Vu<V
SLU 36	14.02	-777	72	8.24		18763	0.1478	8057	334			4.64	Si
SLU 42	12.05	-207	-255	-81.11		0	0	5556	0			0	No, Vu<V
SLU 42	14.02	-747	78	9.42		18036	0.1478	7960	330			4.25	Si
SLU 38	12.05	-303	-238	-74.79		0	0	5556	0			0	No, Vu<V
SLU 38	14.02	-776	68	7.8		18745	0.1478	8055	333			4.92	Si
SLU 34	12.05	2	-365	-117.65		0	0	5556	0			0	No, Vu<V
SLU 34	14.02	-919	109	14.99		22189	0.1478	8514	352			3.22	Si
SLU 49	12.05	-392	-235	-72.94		0	0	5556	0			0	No, Vu<V
SLU 49	14.02	-810	55	6.76		19563	0.1478	8164	338			6.16	Si
SLU 40	12.05	-114	-266	-85.27		0	0	5556	0			0	No, Vu<V
SLU 40	14.02	-707	82	10.6		17069	0.1478	7831	324			3.94	Si
SLU 51	12.05	-406	-229	-71.08		0	0	5556	0			0	No, Vu<V
SLU 51	14.02	-809	51	6.32		19545	0.1478	8162	338			6.66	Si
SLU 46	12.05	-299	-246	-77.1		0	0	5556	0			0	No, Vu<V
SLU 46	14.02	-770	60	7.95		18596	0.1478	8035	333			5.58	Si
SLU 44	12.05	-8	-367	-118.09		0	0	5556	0			0	No, Vu<V
SLU 44	14.02	-912	97	14.7		22021	0.1478	8492	352			3.62	Si

Verifica a taglio nel piano secondo D.M. 17-01-18 (N.T.C.) §7.8.2.2.2 con rottura per scorrimento in combinazioni sismiche, γM = 2

Comb.	Quota	N	V par	M	σ0	σN	l'	fvd	Vt scorr.	Vt fess.diag.	Vt,lim	c.s.	Verifica
SLV 8	12.05	4140	-2571	-823.55		0	0	8333	0			0	No, Vu<V
SLV 8	14.02	-4334	790	124.38		114103	0.1357	16250	617			0.78	No, Vu<V
SLV 6	12.05	-4523	2188	734.64		0	0	8333	0			0	No, Vu<V
SLV 6	14.02	3185	-698	-111.75		0	0	8333	0			0	No, Vu<V
SLV 2	12.05	-947	236	130.88		0	0	8333	0			0	No, Vu<V
SLV 2	14.02	93	-92	-14.91		0	0	8333	0			0	No, Vu<V
SLV 4	12.05	1652	-1191	-336.58		0	0	8333	0			0	No, Vu<V
SLV 4	14.02	-2163	354	55.93		53576	0.1442	16250	656			1.85	Si
SLV 3	12.05	1652	-1191	-336.58		0	0	8333	0			0	No, Vu<V

Comb.	Quota	N	V par	M	σ0	σN	l'	fvd	Vt scorr.	Vt fess.diag.	Vt,lim	c.s.	Verifica
SLV 3	14.02	-2163	354	55.93		53576	0.1442	16250	656			1.85	Si
SLV 10	12.05	-4989	2433	784.68		0	0	8333	0			0	No, Vu<V
SLV 10	14.02	3579	-770	-123.92		0	0	8333	0			0	No, Vu<V
SLV 5	12.05	-4523	2188	734.64		0	0	8333	0			0	No, Vu<V
SLV 5	14.02	3185	-698	-111.75		0	0	8333	0			0	No, Vu<V
SLV 1	12.05	-947	236	130.88		0	0	8333	0			0	No, Vu<V
SLV 1	14.02	93	-92	-14.91		0	0	8333	0			0	No, Vu<V
SLV 7	12.05	4140	-2571	-823.55		0	0	8333	0			0	No, Vu<V
SLV 7	14.02	-4334	790	124.38		114103	0.1357	16250	617			0.78	No, Vu<V
SLV 9	12.05	-4989	2433	784.68		0	0	8333	0			0	No, Vu<V
SLV 9	14.02	3579	-770	-123.92		0	0	8333	0			0	No, Vu<V

Verifica a pressoflessione fuori piano D.M. 17-01-18 (N.T.C.)

quota 13.318 Wa 0.05 denominatore 8 γM = 2

Comb.	fd	Sa	σ0	N	M	Mc	Coeff.s.	Verifica
SLV 1	143750	0.52	0	-38	11.24	0	0	No, e>t/2
SLV 9	143750	0.52	0	4161	11.24	0	0	No, Trazione
SLV 8	143750	0.52	129522	-5362	11.24	0	0	No, Rottura per schiacciamento
SLV 13	143750	0.52	0	1552	11.24	0	0	No, Trazione
SLV 2	143750	0.52	0	-38	11.24	0	0	No, e>t/2
SLV 5	143750	0.52	0	3684	11.24	0	0	No, Trazione
SLV 14	143750	0.52	0	1552	11.24	0	0	No, Trazione
SLV 10	143750	0.52	0	4161	11.24	0	0	No, Trazione
SLV 7	143750	0.52	129522	-5362	11.24	0	0	No, Rottura per schiacciamento
SLV 6	143750	0.52	0	3684	11.24	0	0	No, Trazione

Verifica dei meccanismi locali di collasso con analisi cinematica lineare

forza di aggancio al piano = 0 quota mezzeria = 13.318 Wa = 0.05 Ta = 0.0395

Comb.	N top	N base	V orto	α0	M*	e*	a0*	aLim	Verifica
SLV 3	-155	1652	-10	0	0	0	0	6.98052	No, Trazione
SLV 5	643	-4523	7	0	0	0	0	6.55699	No, Trazione
SLV 9	604	-4989	11	0	0	0	0	6.55699	No, Trazione
SLV 10	604	-4989	11	0	0	0	0	6.55699	No, Trazione
SLV 8	-654	4140	-11	0	0	0	0	6.55699	No, Trazione
SLV 4	-155	1652	-10	0	0	0	0	6.98052	No, Trazione
SLV 1	234	-947	-5	0	0	0	0	6.98052	No, Trazione
SLV 6	643	-4523	7	0	0	0	0	6.55699	No, Trazione
SLV 2	234	-947	-5	0	0	0	0	6.98052	No, Trazione
SLV 7	-654	4140	-11	0	0	0	0	6.55699	No, Trazione

Tabella dei coefficienti di sicurezza minimi

Stato limite	Coeff.s.	Comb.	Verifica
PF_SLU	0	SLU 34	No
V_SLU	0	SLU 2	No
PF_SLV	0	SLV 16	No
V_SLV	0	SLV 1	No
PFFP _SLV	0	SLV 14	No
R_SLV	0	SLV 16	No

Maschio 261

Verifiche condotte secondo D.M. 17-01-18 (N.T.C.)

Dati geometrici

X ini.	Y ini.	X fin.	Y fin.	Quota i.	Quota.s	l	Sp.	h netta	h ini.	h fin.	a	a.s.,sx	a.s.,dx
-24.613	1.139	-4.971	1.141	L7	F1	19.641	0.28	2.275	2.282	2.267			

Caratteristiche del materiale

(Circolare 7 21-01-19 C8.5.I) Muratura in mattoni pieni e malta di calce LC2_Corti

fb	fk	fvk0	fmedio	τ0	fv0	μ	ϕ	fv,lim	E	G	FC
600000			345000	9000	20000	0.58	0.77	32500	320000000	128000000	1.2

Verifica a pressoflessione nel piano secondo D.M. 17-01-18 NTC §7.8.2.2.1 in combinazioni non sismiche, γM = 3

Comb.	Quota	N	M	σ0	Mu	c.s.	Verifica
SLU 27	15.15	-70336	70155.24	12789	582292.59	8.3	Si
SLU 27	17.42	-40299	-19816.48	7328	360159.82	18.175	Si
SLU 30	15.15	-72660	72104	13212	597831.22	8.291	Si
SLU 30	17.42	-42161	-21218.74	7666	375076.77	17.677	Si
SLU 79	15.15	-83326	79398.64	15151	666108.08	8.389	Si
SLU 79	17.42	-45936	-22048.38	8353	404861.04	18.362	Si
SLU 29	15.15	-72659	72196.64	13212	597823.53	8.28	Si
SLU 29	17.42	-42163	-21140.99	7667	375095.51	17.743	Si
SLU 37	15.15	-72077	72010.89	13106	593955.42	8.248	Si
SLU 37	17.42	-42006	-20946.07	7638	373841.27	17.848	Si
SLU 38	15.15	-72078	71918.24	13106	593963.15	8.259	Si
SLU 38	17.42	-42003	-21023.82	7638	373822.51	17.781	Si
SLU 28	15.15	-70337	70062.6	12790	582300.41	8.311	Si
SLU 28	17.42	-40297	-19894.23	7327	360140.89	18.103	Si
SLU 80	15.15	-83327	79305.99	15152	666115.23	8.399	Si
SLU 80	17.42	-45933	-22126.14	8352	404842.69	18.297	Si
SLU 35	15.15	-69754	69969.49	12684	578365.22	8.266	Si
SLU 35	17.42	-40142	-19621.56	7299	358892.73	18.291	Si
SLU 36	15.15	-69755	69876.85	12684	578373.07	8.277	Si
SLU 36	17.42	-40139	-19699.32	7299	358873.78	18.218	Si

Verifica a pressoflessione nel piano secondo D.M. 17-01-18 NTC §7.8.2.2.1 in combinazioni sismiche, γM = 2

Comb.	Quota	N	M	σ0	Mu	c.s.	Verifica
SLV 16	15.15	-41116	71168.7	7476	379075.25	5.326	Si
SLV 16	17.42	-16813	-6682.33	3057	160986.3	24.091	Si
SLV 7	15.15	-40970	34609.45	7450	377822.17	10.917	Si
SLV 7	17.42	-15209	-1879.12	2766	145985.51	77.688	Si
SLV 12	15.15	-40111	55488.58	7293	370399.65	6.675	Si
SLV 12	17.42	-15068	-2832.03	2740	144663.48	51.081	Si
SLV 15	15.15	-41116	71168.7	7476	379075.25	5.326	Si
SLV 15	17.42	-16813	-6682.33	3057	160986.3	24.091	Si
SLV 10	15.15	-45847	30691.81	8336	419526.1	13.669	Si
SLV 10	17.42	-20524	-10656.49	3732	195400.06	18.336	Si
SLV 11	15.15	-40111	55488.58	7293	370399.65	6.675	Si
SLV 11	17.42	-15068	-2832.03	2740	144663.48	51.081	Si
SLV 8	15.15	-40970	34609.45	7450	377822.17	10.917	Si
SLV 8	17.42	-15209	-1879.12	2766	145985.51	77.688	Si
SLV 14	15.15	-42836	63729.67	7789	393863.62	6.18	Si
SLV 14	17.42	-18450	-9029.66	3355	176215.14	19.515	Si
SLV 9	15.15	-45847	30691.81	8336	419526.1	13.669	Si
SLV 9	17.42	-20524	-10656.49	3732	195400.06	18.336	Si
SLV 13	15.15	-42836	63729.67	7789	393863.62	6.18	Si
SLV 13	17.42	-18450	-9029.66	3355	176215.14	19.515	Si

Verifica a taglio nel piano secondo D.M. 17-01-18 (N.T.C.) §7.8.2.2.2 con rottura per scorrimento in combinazioni non sismiche, γM = 3

Comb.	Quota	N	V par	M	σ0	σN	I'	fvd	Vt scorr.	Vt fess.diag.	Vt,lim	c.s.	Verifica
SLU 78	15.15	-81005	-5697	77264.6		14729	19.6413	7519	41354			7.26	Si
SLU 78	17.42	-44069	-922	-20801.63		8013	19.6413	6624	36429			39.52	Si
SLU 71	15.15	-83908	-5378	79584.39		15257	19.6413	7590	41741			7.76	Si
SLU 71	17.42	-46093	-502	-22243.3		8381	19.6413	6673	36699			73.17	Si
SLU 72	15.15	-83909	-5394	79491.74		15257	19.6413	7590	41741			7.74	Si
SLU 72	17.42	-46091	-507	-22321.06		8381	19.6413	6673	36699			72.33	Si
SLU 80	15.15	-83327	-5802	79305.99		15152	19.6413	7576	41663			7.18	Si
SLU 80	17.42	-45933	-841	-22126.14		8352	19.6413	6669	36678			43.59	Si
SLU 37	15.15	-72077	-5323	72010.89		13106	19.6413	7303	40163			7.55	Si
SLU 37	17.42	-42006	-780	-20946.07		7638	19.6413	6574	36154			46.35	Si
SLU 38	15.15	-72078	-5338	71918.24		13106	19.6413	7303	40163			7.52	Si
SLU 38	17.42	-42003	-786	-21023.82		7638	19.6413	6574	36154			46.01	Si
SLU 35	15.15	-69754	-5217	69969.49		12684	19.6413	7247	39854			7.64	Si
SLU 35	17.42	-40142	-860	-19621.56		7299	19.6413	6529	35905			41.73	Si
SLU 36	15.15	-69755	-5233	69876.85		12684	19.6413	7247	39854			7.62	Si
SLU 36	17.42	-40139	-866	-19699.32		7299	19.6413	6529	35905			41.45	Si
SLU 77	15.15	-81003	-5681	77357.24		14729	19.6413	7519	41354			7.28	Si
SLU 77	17.42	-44072	-916	-20723.88		8014	19.6413	6624	36429			39.77	Si
SLU 79	15.15	-83326	-5786	79398.64		15151	19.6413	7576	41663			7.2	Si
SLU 79	17.42	-45936	-836	-22048.38		8353	19.6413	6669	36678			43.89	Si

Verifica a taglio nel piano secondo D.M. 17-01-18 (N.T.C.) §7.8.2.2.2 con rottura per scorrimento in combinazioni sismiche, γM = 2

Comb.	Quota	N	V par	M	σ0	σN	I'	fvd	Vt scorr.	Vt fess.diag.	Vt,lim	c.s.	Verifica
SLV 6	15.15	-46706	-10867	9812.68		8493	19.6413	10032	55171			5.08	Si
SLV 6	17.42	-20665	-8103	-9703.58		3758	19.6413	9085	49963			6.17	Si
SLV 2	15.15	-45701	-24611	-5867.43		8310	19.6413	9995	54970			2.23	Si
SLV 2	17.42	-18920	-13880	-5853.29		3440	19.6413	9021	49614			3.57	Si
SLV 16	15.15	-41116	19365	71168.7		7476	19.6413	9829	54053			2.79	Si
SLV 16	17.42	-16813	12578	-6682.33		3057	19.6413	8945	49192			3.91	Si
SLV 13	15.15	-42836	18278	63729.67		7789	19.6413	9891	54397			2.98	Si
SLV 13	17.42	-18450	10281	-9029.66		3355	19.6413	9004	49520			4.82	Si
SLV 4	15.15	-43981	-23524	1571.6		7997	19.6413	9933	54626			2.32	Si
SLV 4	17.42	-17283	-11584	-3505.95		3143	19.6413	8962	49286			4.25	Si
SLV 15	15.15	-41116	19365	71168.7		7476	19.6413	9829	54053			2.79	Si
SLV 15	17.42	-16813	12578	-6682.33		3057	19.6413	8945	49192			3.91	Si
SLV 3	15.15	-43981	-23524	1571.6		7997	19.6413	9933	54626			2.32	Si
SLV 3	17.42	-17283	-11584	-3505.95		3143	19.6413	8962	49286			4.25	Si
SLV 5	15.15	-46706	-10867	9812.68		8493	19.6413	10032	55171			5.08	Si
SLV 5	17.42	-20665	-8103	-9703.58		3758	19.6413	9085	49963			6.17	Si
SLV 1	15.15	-45701	-24611	-5867.43		8310	19.6413	9995	54970			2.23	Si
SLV 1	17.42	-18920	-13880	-5853.29		3440	19.6413	9021	49614			3.57	Si
SLV 14	15.15	-42836	18278	63729.67		7789	19.6413	9891	54397			2.98	Si
SLV 14	17.42	-18450	10281	-9029.66		3355	19.6413	9004	49520			4.82	Si

Verifica a pressoflessione fuori piano D.M. 17-01-18 (N.T.C.)

quota 16.284 Wa 0.05 denominatore 8 γM = 2

Comb.	fd	Sa	σ0	N	M	Mc	Coeff.s.	Verifica
SLV 12	143750	0.58	5006	-27532	1304.42	3696.56	2.83	Si
SLV 11	143750	0.58	5006	-27532	1304.42	3696.56	2.83	Si
SLV 8	143750	0.58	5071	-27888	1304.42	3742.34	2.87	Si
SLV 7	143750	0.58	5071	-27888	1304.42	3742.34	2.87	Si
SLV 15	143750	0.58	5503	-30263	1304.42	4046.05	3.1	Si
SLV 16	143750	0.58	5503	-30263	1304.42	4046.05	3.1	Si
SLV 3	143750	0.58	5719	-31451	1304.42	4197.1	3.22	Si
SLV 4	143750	0.58	5719	-31451	1304.42	4197.1	3.22	Si
SLV 14	143750	0.58	5993	-32961	1304.42	4388.17	3.36	Si
SLV 13	143750	0.58	5993	-32961	1304.42	4388.17	3.36	Si

Verifica dei meccanismi locali di collasso con analisi cinematica lineare

forza di aggancio al piano = 0 quota mezzeria = 16.284 Wa = 0.05 Ta = 0.0309

Comb.	N top	N base	V orto	α0	M*	e*	a0*	aLim	Verifica
SLV 11	-15068	-40111	-2900	0	3413.7	0.891	0	6.48567	No
SLV 5	-20665	-46706	2748	0	3950.9	0.898	0	6.48567	No
SLV 12	-15068	-40111	-2900	0	3413.7	0.891	0	6.48567	No

Comb.	N top	N base	V orto	α0	M*	e*	a0*	aLim	Verifica
SLV 7	-15209	-40970	-2786	0	3427	0.891	0	6.48567	No
SLV 8	-15209	-40970	-2786	0	3427	0.891	0	6.48567	No
SLV 6	-20665	-46706	2748	0	3950.9	0.898	0	6.48567	No
SLV 9	-20524	-45847	2633	0.001	3937.2	0.897	0.00816	6.48567	No
SLV 10	-20524	-45847	2633	0.001	3937.2	0.897	0.00816	6.48567	No
SLV 15	-16813	-41116	-1098	0.047	3579.4	0.893	0.76715	6.80051	No
SLV 16	-16813	-41116	-1098	0.047	3579.4	0.893	0.76715	6.80051	No

Tabella dei coefficienti di sicurezza minimi

Stato limite	Coeff.s.	Comb.	Verifica
PF_SLU	8.248	SLU 37	Si
V_SLU	7.18	SLU 80	Si
PF_SLV	5.326	SLV 15	Si
V_SLV	2.234	SLV 1	Si
PFFP_SLV	2.834	SLV 11	Si
R_SLV	0	SLV 5	No

Maschio 262

Verifiche condotte secondo D.M. 17-01-18 (N.T.C.)

Dati geometrici

X ini.	Y ini.	X fin.	Y fin.	Quota i.	Quota.s	l	Sp.	h netta	h ini.	h fin.	a	a.s.,sx	a.s.,dx
-24.613	1.139	-4.971	1.141	F1	F4	19.641	0.28	0.174	0.182	0.181			

Caratteristiche del materiale

(Circolare 7 21-01-19 C8.5.I) Muratura in mattoni pieni e malta di calce LC2_Corti

fb	fk	fvk0	fmedio	τ0	fv0	μ	ϕ	fv,lim	E	G	FC
600000			345000	9000	20000	0.58	0.77	32500	320000000	128000000	1.2

Verifica a pressoflessione nel piano secondo D.M. 17-01-18 NTC §7.8.2.2.1 in combinazioni non sismiche, γM = 3

Comb.	Quota	N	M	σ0	Mu	c.s.	Verifica
SLU 29	17.43	-11147	-67863.75	2027	106750.1	1.573	Si
SLU 29	17.6	-9419	-68546.97	1713	90558.12	1.321	Si
SLU 27	17.43	-10741	-64686.41	1953	102958.69	1.592	Si
SLU 27	17.6	-9013	-65333.08	1639	86735.89	1.328	Si
SLU 35	17.43	-10599	-64824.55	1927	101621.72	1.568	Si
SLU 35	17.6	-8870	-65416.73	1613	85388.07	1.305	Si
SLU 30	17.43	-11141	-67967.3	2026	106686.97	1.57	Si
SLU 30	17.6	-9412	-68649.91	1712	90494.47	1.318	Si
SLU 38	17.43	-10998	-68105.45	2000	105352.49	1.547	Si
SLU 38	17.6	-9270	-68733.56	1686	89149.15	1.297	Si
SLU 37	17.43	-11004	-68001.9	2001	105415.67	1.55	Si
SLU 37	17.6	-9276	-68630.62	1687	89212.85	1.3	Si
SLU 16	17.43	-10426	-62217.63	1896	100005.55	1.607	Si
SLU 16	17.6	-8698	-62844.96	1582	83758.77	1.333	Si
SLU 28	17.43	-10735	-64789.95	1952	102895.44	1.588	Si
SLU 28	17.6	-9007	-65436.01	1638	86672.12	1.325	Si
SLU 36	17.43	-10592	-64928.1	1926	101558.42	1.564	Si
SLU 36	17.6	-8864	-65519.67	1612	85324.25	1.302	Si
SLU 17	17.43	-10419	-62321.17	1895	99942.19	1.604	Si
SLU 17	17.6	-8691	-62947.89	1580	83694.9	1.33	Si

Verifica a pressoflessione nel piano secondo D.M. 17-01-18 NTC §7.8.2.2.1 in combinazioni sismiche, γM = 2

Comb.	Quota	N	M	σ0	Mu	c.s.	Verifica
SLV 14	17.43	-7115	-29869.95	1294	69137.62	2.315	Si
SLV 14	17.6	-5248	-32198.11	954	51135.66	1.588	Si
SLV 4	17.43	-5462	-24258.62	993	53200.72	2.193	Si
SLV 4	17.6	-3873	-22605.79	704	37812.71	1.673	Si
SLV 13	17.43	-7115	-29869.95	1294	69137.62	2.315	Si
SLV 13	17.6	-5248	-32198.11	954	51135.66	1.588	Si
SLV 11	17.43	-3033	-19998.64	552	29656.14	1.483	Si
SLV 11	17.6	-1281	-19838.71	0	0	0	No, e>l/2
SLV 16	17.43	-5187	-25517.28	943	50547.11	1.981	Si
SLV 16	17.6	-3329	-27242.83	605	32534.25	1.194	Si
SLV 8	17.43	-3116	-19621.04	567	30457.64	1.552	Si
SLV 8	17.6	-1444	-18447.6	0	0	0	No, e>l/2
SLV 12	17.43	-3033	-19998.64	552	29656.14	1.483	Si
SLV 12	17.6	-1281	-19838.71	0	0	0	No, e>l/2
SLV 7	17.43	-3116	-19621.04	567	30457.64	1.552	Si
SLV 7	17.6	-1444	-18447.6	0	0	0	No, e>l/2
SLV 3	17.43	-5462	-24258.62	993	53200.72	2.193	Si
SLV 3	17.6	-3873	-22605.79	704	37812.71	1.673	Si
SLV 15	17.43	-5187	-25517.28	943	50547.11	1.981	Si
SLV 15	17.6	-3329	-27242.83	605	32534.25	1.194	Si

Verifica a taglio nel piano secondo D.M. 17-01-18 (N.T.C.) §7.8.2.2.2 con rottura per scorrimento in combinazioni non sismiche, γM = 3

Comb.	Quota	N	V par	M	σ0	σN	l'	fvd	Vt scorr.	Vt fess.diag.	Vt,lim	c.s.	Verifica
SLU 8	17.43	-10569	2760	-62079.48		3188	11.8404	5981	19828			7.18	Si
SLU 8	17.6	-8841	2760	-62761.3		3867	8.1644	6071	13879			5.03	Si
SLU 37	17.43	-11004	2442	-68001.9		3598	10.9234	6035	18459			7.56	Si
SLU 37	17.6	-9276	2442	-68630.62		4559	7.2664	6163	12540			5.13	Si
SLU 50	17.43	-12220	2992	-67707.95		3399	12.8392	6009	21601			7.22	Si
SLU 50	17.6	-9973	2991	-68495.15		4021	8.8578	6092	15109			5.05	Si
SLU 71	17.43	-12798	3001	-73492.22		3736	12.2348	6054	20738			6.91	Si
SLU 71	17.6	-10552	3001	-74280.81		4517	8.3427	6158	14384			4.79	Si

Comb.	Quota	N	V par	M	σ0	σN	l'	fvd	Vt scorr.	Vt fess.diag.	Vt,lim	c.s.	Verifica
SLU 38	17.43	-10998	2439	-68105.45		3609	10.8837	6037	18397			7.54	Si
SLU 38	17.6	-9270	2439	-68733.56		4587	7.2169	6167	12462			5.11	Si
SLU 72	17.43	-12791	2997	-73595.77		3744	12.2014	6055	20685			6.9	Si
SLU 72	17.6	-10545	2997	-74383.75		4537	8.2998	6161	14317			4.78	Si
SLU 51	17.43	-12213	2988	-67811.5		3406	12.8045	6010	21547			7.21	Si
SLU 51	17.6	-9966	2988	-68598.08		4039	8.8129	6094	15038			5.03	Si
SLU 30	17.43	-11141	2766	-67967.3		3565	11.1593	6031	18844			6.81	Si
SLU 30	17.6	-9412	2766	-68649.91		4434	7.5814	6147	13048			4.72	Si
SLU 29	17.43	-11147	2769	-67863.75		3555	11.1983	6030	18906			6.83	Si
SLU 29	17.6	-9419	2769	-68546.97		4409	7.6299	6143	13125			4.74	Si
SLU 9	17.43	-10562	2757	-62183.03		3197	11.7997	5982	19763			7.17	Si
SLU 9	17.6	-8834	2757	-62864.24		3889	8.1132	6074	13798			5.01	Si

Verifica a taglio nel piano secondo D.M. 17-01-18 (N.T.C.) §7.8.2.2.2 con rottura per scorrimento in combinazioni sismiche, γM = 2

Comb.	Quota	N	V par	M	σ0	σN	l'	fvd	Vt scorr.	Vt fess.diag.	Vt,lim	c.s.	Verifica
SLV 2	17.43	-7390	-6028	-28611.29		1479	17.8469	8629	43121			7.15	Si
SLV 2	17.6	-5791	-6533	-27561.07		1362	15.1847	8606	36589			5.6	Si
SLV 8	17.43	-3116	2303	-19621.04		1053	10.5703	8544	25287			10.98	Si
SLV 8	17.6	-1444	2900	-18447.6		0	0	8333	0			0	No, Vu<V
SLV 13	17.43	-7115	5411	-29869.95		1507	16.8681	8635	40782			7.54	Si
SLV 13	17.6	-5248	5505	-32198.11		1695	11.0558	8672	26846			4.88	Si
SLV 15	17.43	-5187	7409	-25517.28		1260	14.7037	8585	35346			4.77	Si
SLV 15	17.6	-3329	7914	-27242.83		2420	4.914	8817	12132			1.53	Si
SLV 7	17.43	-3116	2303	-19621.04		1053	10.5703	8544	25287			10.98	Si
SLV 7	17.6	-1444	2900	-18447.6		0	0	8333	0			0	No, Vu<V
SLV 16	17.43	-5187	7409	-25517.28		1260	14.7037	8585	35346			4.77	Si
SLV 16	17.6	-3329	7914	-27242.83		2420	4.914	8817	12132			1.53	Si
SLV 14	17.43	-7115	5411	-29869.95		1507	16.8681	8635	40782			7.54	Si
SLV 14	17.6	-5248	5505	-32198.11		1695	11.0558	8672	26846			4.88	Si
SLV 1	17.43	-7390	-6028	-28611.29		1479	17.8469	8629	43121			7.15	Si
SLV 1	17.6	-5791	-6533	-27561.07		1362	15.1847	8606	36589			5.6	Si
SLV 11	17.43	-3033	5735	-19998.64		1119	9.6839	8557	23203			4.05	Si
SLV 11	17.6	-1281	6511	-19838.71		0	0	8333	0			0	No, Vu<V
SLV 12	17.43	-3033	5735	-19998.64		1119	9.6839	8557	23203			4.05	Si
SLV 12	17.6	-1281	6511	-19838.71		0	0	8333	0			0	No, Vu<V

Verifica a pressoflessione fuori piano D.M. 17-01-18 (N.T.C.)

quota 17.515 Wa 0.05 denominatore 8 γM = 2

Comb.	fd	Sa	σ0	N	M	Mc	Coeff.s.	Verifica
SLV 12	143750	0.61	233	-1281	7.97	179.01	22.46	Si
SLV 11	143750	0.61	233	-1281	7.97	179.01	22.46	Si
SLV 7	143750	0.61	263	-1444	7.97	201.73	25.31	Si
SLV 8	143750	0.61	263	-1444	7.97	201.73	25.31	Si
SLV 15	143750	0.61	605	-3329	7.97	463.79	58.19	Si
SLV 16	143750	0.61	605	-3329	7.97	463.79	58.19	Si
SLV 4	143750	0.61	704	-3873	7.97	539.04	67.63	Si
SLV 3	143750	0.61	704	-3873	7.97	539.04	67.63	Si
SLV 14	143750	0.61	954	-5248	7.97	728.97	91.46	Si
SLV 13	143750	0.61	954	-5248	7.97	728.97	91.46	Si

Verifica dei meccanismi locali di collasso con analisi cinematica lineare

forza di aggancio al piano = 0 quota mezzeria = 17.515 Wa = 0.05 Ta = 0.0002

Comb.	N top	N base	V orto	α0	M*	e*	a0*	aLim	Verifica
SLV 12	-1281	-3033	-6510	0	273.3	0.893	0	4.79105	No
SLV 7	-1444	-3116	-6252	0	289	0.895	0	4.79105	No
SLV 8	-1444	-3116	-6252	0	289	0.895	0	4.79105	No
SLV 11	-1281	-3033	-6510	0	273.3	0.893	0	4.79105	No
SLV 6	-7839	-9544	5711	0.228	933.1	0.957	3.45679	4.79105	No
SLV 5	-7839	-9544	5711	0.228	933.1	0.957	3.45679	4.79105	No
SLV 10	-7676	-9461	5453	0.247	916.6	0.957	3.75137	4.79105	No
SLV 9	-7676	-9461	5453	0.247	916.6	0.957	3.75137	4.79105	No
SLV 15	-3329	-5187	-2624	0.344	476.1	0.925	5.40215	4.79222	Si
SLV 16	-3329	-5187	-2624	0.344	476.1	0.925	5.40215	4.79222	Si

Tabella dei coefficienti di sicurezza minimi

Stato limite	Coeff.s.	Comb.	Verifica
PF_SLU	1.297	SLU 38	Si
V_SLU	4.718	SLU 30	Si
PF_SLV	0	SLV 7	No
V_SLV	0	SLV 7	No
PFFP_SLV	22.459	SLV 11	Si
R_SLV	0	SLV 7	No

Maschio 263

Verifiche condotte secondo D.M. 17-01-18 (N.T.C.)

Dati geometrici

X ini.	Y ini.	X fin.	Y fin.	Quota i.	Quota.s	l	Sp.	h netta	h ini.	h fin.	a	a.s.,sx	a.s.,dx
-4.971	1.141	-4.748	1.141	L7	F4	0.224	0.28	2.448	2.448	2.448			

Caratteristiche del materiale

(Circolare 7 21-01-19 C8.5.I) Muratura in mattoni pieni e malta di calce LC2_Corti

fb	fk	fvk0	fmedio	τ0	fv0	μ	ϕ	fv,lim	E	G	FC
600000			345000	9000	20000	0.58	0.77	32500	320000000	128000000	1.2

Verifica a pressoflessione nel piano secondo D.M. 17-01-18 NTC §7.8.2.2.1 in combinazioni non sismiche, γM = 3

Comb.	Quota	N	M	σ0	Mu	c.s.	Verifica
SLU 53	15.15	-1529	342.41	0	0	0	No, e>l/2
SLU 53	17.6	-10694	1147.69	170870	0	0	No, Rottura per schiacciamento
SLU 55	15.15	-1603	354.52	0	0	0	No, e>l/2
SLU 55	17.6	-11419	1222.57	182463	0	0	No, Rottura per schiacciamento
SLU 56	15.15	-1921	410.33	0	0	0	No, e>l/2
SLU 56	17.6	-14877	1585.49	237716	0	0	No, Rottura per schiacciamento
SLU 1	15.15	-918	206.08	0	0	0	No, e>l/2
SLU 1	17.6	-5952	640.3	95098	0	0	No, Rottura per schiacciamento
SLU 61	15.15	-1245	302.59	0	0	0	No, e>l/2
SLU 61	17.6	-7189	782.76	114870	0	0	No, Rottura per schiacciamento
SLU 60	15.15	-1244	302.54	0	0	0	No, e>l/2
SLU 60	17.6	-7182	781.91	114755	0	0	No, Rottura per schiacciamento
SLU 57	15.15	-1923	410.38	0	0	0	No, e>l/2
SLU 57	17.6	-14884	1586.34	237831	0	0	No, Rottura per schiacciamento
SLU 59	15.15	-1994	422.4	0	0	0	No, e>l/2
SLU 59	17.6	-15598	1659.8	249233	0	0	No, Rottura per schiacciamento
SLU 54	15.15	-1530	342.47	0	0	0	No, e>l/2
SLU 54	17.6	-10701	1148.54	170985	0	0	No, Rottura per schiacciamento
SLU 58	15.15	-1993	422.35	0	0	0	No, e>l/2
SLU 58	17.6	-15591	1658.95	249117	0	0	No, Rottura per schiacciamento

Verifica a pressoflessione nel piano secondo D.M. 17-01-18 NTC §7.8.2.2.1 in combinazioni sismiche, γM = 2

Comb.	Quota	N	M	σ0	Mu	c.s.	Verifica
SLV 4	15.15	-840	106.17	0	0	0	No, e>l/2
SLV 4	17.6	-6824	705.36	109043	82.04	0.116	No, M>Mu
SLV 2	15.15	-411	105.52	0	0	0	No, e>l/2
SLV 2	17.6	-6348	704.41	101429	120.52	0.171	No, M>Mu
SLV 10	15.15	-395	269.29	0	0	0	No, e>l/2
SLV 10	17.6	-5381	667.55	0	0	0	No, e>l/2
SLV 8	15.15	-1601	195.52	0	0	0	No, e>l/2
SLV 8	17.6	-7159	687.22	114391	51.05	0.074	No, M>Mu
SLV 5	15.15	-172	193.36	0	0	0	No, e>l/2
SLV 5	17.6	-5571	684.06	0	0	0	No, e>l/2
SLV 1	15.15	-411	105.52	0	0	0	No, e>l/2
SLV 1	17.6	-6348	704.41	101429	120.52	0.171	No, M>Mu
SLV 3	15.15	-840	106.17	0	0	0	No, e>l/2
SLV 3	17.6	-6824	705.36	109043	82.04	0.116	No, M>Mu
SLV 6	15.15	-172	193.36	0	0	0	No, e>l/2
SLV 6	17.6	-5571	684.06	0	0	0	No, e>l/2
SLV 7	15.15	-1601	195.52	0	0	0	No, e>l/2
SLV 7	17.6	-7159	687.22	114391	51.05	0.074	No, M>Mu
SLV 9	15.15	-395	269.29	0	0	0	No, e>l/2
SLV 9	17.6	-5381	667.55	0	0	0	No, e>l/2

Verifica a taglio nel piano secondo D.M. 17-01-18 (N.T.C.) §7.8.2.2.2 con rottura per scorrimento in combinazioni non sismiche, γM = 3

Comb.	Quota	N	V par	M	σ0	σN	l'	fvd	Vt scorr.	Vt fess.diag.	Vt,lim	c.s.	Verifica
SLU 56	15.15	-1921	581	410.33		0	0	5556	0			0	No, Vu<V
SLU 56	17.6	-14877	-6882	1585.49		3416672	0.0156	10833	47			0.01	No, Vu<V
SLU 58	15.15	-1993	592	422.35		0	0	5556	0			0	No, Vu<V
SLU 58	17.6	-15591	-7196	1658.95		3469681	0.016	10833	49			0.01	No, Vu<V
SLU 57	15.15	-1923	581	410.38		0	0	5556	0			0	No, Vu<V
SLU 57	17.6	-14884	-6886	1586.34		3422010	0.0155	10833	47			0.01	No, Vu<V
SLU 54	15.15	-1530	511	342.47		0	0	5556	0			0	No, Vu<V
SLU 54	17.6	-10701	-5001	1148.54		2879481	0.0133	10833	40			0.01	No, Vu<V
SLU 53	15.15	-1529	512	342.41		0	0	5556	0			0	No, Vu<V
SLU 53	17.6	-10694	-4998	1147.69		2872831	0.0133	10833	40			0.01	No, Vu<V
SLU 59	15.15	-1994	592	422.4		0	0	5556	0			0	No, Vu<V
SLU 59	17.6	-15598	-7200	1659.8		3474793	0.016	10833	49			0.01	No, Vu<V
SLU 55	15.15	-1603	522	354.52		0	0	5556	0			0	No, Vu<V
SLU 55	17.6	-11419	-5317	1222.57		2896614	0.0141	10833	43			0.01	No, Vu<V
SLU 1	15.15	-918	310	206.08		0	0	5556	0			0	No, Vu<V
SLU 1	17.6	-5952	-2791	640.3		1698471	0.0125	10833	38			0.01	No, Vu<V
SLU 61	15.15	-1245	488	302.59		0	0	5556	0			0	No, Vu<V
SLU 61	17.6	-7189	-3431	782.76		2978593	0.0086	10833	26			0.01	No, Vu<V
SLU 60	15.15	-1244	489	302.54		0	0	5556	0			0	No, Vu<V
SLU 60	17.6	-7182	-3427	781.91		2966062	0.0086	10833	26			0.01	No, Vu<V

Verifica a taglio nel piano secondo D.M. 17-01-18 (N.T.C.) §7.8.2.2.2 con rottura per scorrimento in combinazioni sismiche, γM = 2

Comb.	Quota	N	V par	M	σ0	σN	l'	fvd	Vt scorr.	Vt fess.diag.	Vt,lim	c.s.	Verifica
SLV 3	15.15	-840	52	106.17		0	0	8333	0			0	No, Vu<V
SLV 3	17.6	-6824	-3126	705.36		967662	0.0252	16250	115			0.04	No, Vu<V
SLV 2	15.15	-411	188	105.52		0	0	8333	0			0	No, Vu<V
SLV 2	17.6	-6348	-3125	704.41		0	0	8333	0			0	No, Vu<V
SLV 1	15.15	-411	188	105.52		0	0	8333	0			0	No, Vu<V
SLV 1	17.6	-6348	-3125	704.41		0	0	8333	0			0	No, Vu<V
SLV 10	15.15	-395	660	269.29		0	0	8333	0			0	No, Vu<V
SLV 10	17.6	-5381	-2907	667.55		0	0	8333	0			0	No, Vu<V
SLV 6	15.15	-172	515	193.36		0	0	8333	0			0	No, Vu<V
SLV 6	17.6	-5571	-3008	684.06		0	0	8333	0			0	No, Vu<V

Comb.	Quota	N	V par	M	σ0	σN	l'	fvd	Vt scorr.	Vt fess.diag.	Vt,lim	c.s.	Verifica
SLV 4	15.15	-840	52	106.17		0	0	8333	0			0	No, Vu<V
SLV 4	17.6	-6824	-3126	705.36		967662	0.0252	16250	115			0.04	No, Vu<V
SLV 5	15.15	-172	515	193.36		0	0	8333	0			0	No, Vu<V
SLV 5	17.6	-5571	-3008	684.06		0	0	8333	0			0	No, Vu<V
SLV 7	15.15	-1601	63	195.52		0	0	8333	0			0	No, Vu<V
SLV 7	17.6	-7159	-3009	687.22		540692	0.0473	16250	215			0.07	No, Vu<V
SLV 9	15.15	-395	660	269.29		0	0	8333	0			0	No, Vu<V
SLV 9	17.6	-5381	-2907	667.55		0	0	8333	0			0	No, Vu<V
SLV 8	15.15	-1601	63	195.52		0	0	8333	0			0	No, Vu<V
SLV 8	17.6	-7159	-3009	687.22		540692	0.0473	16250	215			0.07	No, Vu<V

Verifica a pressoflessione fuori piano D.M. 17-01-18 (N.T.C.)

quota 16.374 Wa 0.05 denominatore 8 γM = 2

Comb.	fd	Sa	σ0	N	M	Mc	Coeff.s.	Verifica
SLV 5	143750	0.59	9488	-594	17.25	76.68	4.44	Si
SLV 6	143750	0.59	9488	-594	17.25	76.68	4.44	Si
SLV 9	143750	0.59	10302	-645	17.25	82.65	4.79	Si
SLV 10	143750	0.59	10302	-645	17.25	82.65	4.79	Si
SLV 1	143750	0.59	13005	-814	17.25	101.82	5.9	Si
SLV 2	143750	0.59	13005	-814	17.25	101.82	5.9	Si
SLV 13	143750	0.59	15719	-984	17.25	120.01	6.96	Si
SLV 14	143750	0.59	15719	-984	17.25	120.01	6.96	Si
SLV 4	143750	0.59	16833	-1053	17.25	127.17	7.37	Si
SLV 3	143750	0.59	16833	-1053	17.25	127.17	7.37	Si

Verifica dei meccanismi locali di collasso con analisi cinematica lineare

forza di aggancio al piano = 0 quota mezzeria = 16.374 Wa = 0.05 Ta = 0.0357

Comb.	N top	N base	V orto	α0	M*	e*	a0*	aLim	Verifica
SLV 9	-5381	-395	242	0.015	569.7	0.988	0.21595	6.8884	No
SLV 10	-5381	-395	242	0.015	569.7	0.988	0.21595	6.8884	No
SLV 5	-5571	-172	218	0.02	589	0.988	0.29946	6.8884	No
SLV 6	-5571	-172	218	0.02	589	0.988	0.29946	6.8884	No
SLV 7	-7159	-1601	-218	0.028	750.9	0.991	0.41664	6.8884	No
SLV 8	-7159	-1601	-218	0.028	750.9	0.991	0.41664	6.8884	No
SLV 11	-6969	-1824	-193	0.031	731.6	0.991	0.45583	6.8884	No
SLV 12	-6969	-1824	-193	0.031	731.6	0.991	0.45583	6.8884	No
SLV 13	-5716	-1156	118	0.038	603.8	0.989	0.56324	7.28442	No
SLV 14	-5716	-1156	118	0.038	603.8	0.989	0.56324	7.28442	No

Tabella dei coefficienti di sicurezza minimi

Stato limite	Coeff.s.	Comb.	Verifica
PF_SLU	0	SLU 1	No
V_SLU	0	SLU 1	No
PF_SLV	0	SLV 1	No
V_SLV	0	SLV 1	No
PFFP_SLV	4.445	SLV 5	Si
R_SLV	0.031	SLV 9	No

Maschio 264

Verifiche condotte secondo D.M. 17-01-18 (N.T.C.)

Dati geometrici

X ini.	Y ini.	X fin.	Y fin.	Quota i.	Quota.s	l	Sp.	h netta	h ini.	h fin.	a	a.s.,sx	a.s.,dx
-13.727	-4.696	-13.062	-4.696	L2	Z medio 333 cm	0.666	0.3	2.75	2.75	2.75			

Caratteristiche del materiale

(Circolare 7 21-01-19 C8.5.I) Muratura in mattoni pieni e malta di calce LC2_Corti

fb	fk	fvk0	fmedio	τ0	fv0	μ	ϕ	fv,lim	E	G	FC
600000			345000	9000	20000	0.58	0.77	32500	320000000	128000000	1.2

Verifica a pressoflessione nel piano secondo D.M. 17-01-18 NTC §7.8.2.2.1 in combinazioni non sismiche, γM = 3

Comb.	Quota	N	M	σ0	Mu	c.s.	Verifica
SLU 83	0.58	-12301	636.07	61606	997.73	1.569	Si
SLU 83	3.08	-12211	600.07	61152	1013.02	1.688	Si
SLU 77	0.58	-12046	624.86	60325	1040.02	1.664	Si
SLU 77	3.08	-11908	579.92	59636	1061.67	1.831	Si
SLU 75	0.58	-11719	612.04	58688	1090.18	1.781	Si
SLU 75	3.08	-11713	580.72	58661	1090.97	1.879	Si
SLU 74	0.58	-11949	618.09	59841	1055.31	1.707	Si
SLU 74	3.08	-11835	580.57	59270	1072.83	1.848	Si
SLU 78	0.58	-11815	618.81	59172	1075.81	1.739	Si
SLU 78	3.08	-11786	580.07	59026	1080.18	1.862	Si
SLU 81	0.58	-12205	629.3	61122	1014.03	1.611	Si
SLU 81	3.08	-12138	600.72	60787	1025.09	1.706	Si
SLU 79	0.58	-12013	622.99	60162	1045.22	1.678	Si
SLU 79	3.08	-11870	577.67	59448	1067.44	1.848	Si
SLU 80	0.58	-11783	616.94	59008	1080.7	1.752	Si
SLU 80	3.08	-11749	577.82	58838	1085.76	1.879	Si
SLU 82	0.58	-11974	623.25	59968	1051.32	1.687	Si
SLU 82	3.08	-12016	600.86	60177	1044.74	1.739	Si
SLU 84	0.58	-12071	630.02	60452	1035.93	1.644	Si
SLU 84	3.08	-12089	600.22	60542	1033.04	1.721	Si

Verifica a pressoflessione nel piano secondo D.M. 17-01-18 NTC §7.8.2.2.1 in combinazioni sismiche, γM = 2

Comb.	Quota	N	M	σ0	Mu	c.s.	Verifica
SLV 1	0.58	-6140	-205.22	30747	1529.07	7.451	Si
SLV 1	3.08	-17117	1901.85	85724	1699.99	0.894	No, M>Mu
SLV 15	0.58	-10859	1080.2	54384	2005.44	1.857	Si
SLV 15	3.08	318	-1074.12	0	0	0	No, Trazione
SLV 12	0.58	-2969	484.87	14869	867.85	1.79	Si
SLV 12	3.08	305	-379.93	0	0	0	No, Trazione
SLV 11	0.58	-2969	484.87	14869	867.85	1.79	Si
SLV 11	3.08	305	-379.93	0	0	0	No, Trazione
SLV 14	0.58	-14973	1176.09	74984	1924.99	1.637	Si
SLV 14	3.08	-3697	-845.07	18515	1043.91	1.235	Si
SLV 4	0.58	-2026	-301.11	10148	618.34	2.054	Si
SLV 4	3.08	-13102	1672.8	65618	2018.79	1.207	Si
SLV 3	0.58	-2026	-301.11	10148	618.34	2.054	Si
SLV 3	3.08	-13102	1672.8	65618	2018.79	1.207	Si
SLV 16	0.58	-10859	1080.2	54384	2005.44	1.857	Si
SLV 16	3.08	318	-1074.12	0	0	0	No, Trazione
SLV 13	0.58	-14973	1176.09	74984	1924.99	1.637	Si
SLV 13	3.08	-3697	-845.07	18515	1043.91	1.235	Si
SLV 2	0.58	-6140	-205.22	30747	1529.07	7.451	Si
SLV 2	3.08	-17117	1901.85	85724	1699.99	0.894	No, M>Mu

Verifica a taglio nel piano secondo D.M. 17-01-18 (N.T.C.) §7.8.2.2.2 con rottura per scorrimento in combinazioni non sismiche, γM = 3

Comb.	Quota	N	V par	M	σ0	σN	I'	fvd	Vt scorr.	Vt fess.diag.	Vt,lim	c.s.	Verifica
SLU 80	0.58	-11783	1842	616.94		59008	0.6656	10833	2163			1.17	Si
SLU 80	3.08	-11749	-1923	577.82		58838	0.6656	10833	2163			1.13	Si
SLU 81	0.58	-12205	1893	629.3		61122	0.6656	10833	2163			1.14	Si
SLU 81	3.08	-12138	-1996	600.72		60787	0.6656	10833	2163			1.08	Si
SLU 78	0.58	-11815	1849	618.81		59172	0.6656	10833	2163			1.17	Si
SLU 78	3.08	-11786	-1931	580.07		59026	0.6656	10833	2163			1.12	Si
SLU 76	0.58	-11532	1815	606.13		57755	0.6656	10833	2163			1.19	Si
SLU 76	3.08	-11595	-1935	578.56		58066	0.6656	10833	2163			1.12	Si
SLU 84	0.58	-12071	1891	630.02		60452	0.6656	10833	2163			1.14	Si
SLU 84	3.08	-12089	-2002	600.22		60542	0.6656	10833	2163			1.08	Si
SLU 82	0.58	-11974	1876	623.25		59968	0.6656	10833	2163			1.15	Si
SLU 82	3.08	-12016	-2007	600.86		60177	0.6656	10833	2163			1.08	Si
SLU 83	0.58	-12301	1909	636.07		61606	0.6656	10833	2163			1.13	Si
SLU 83	3.08	-12211	-1991	600.07		61152	0.6656	10833	2163			1.09	Si
SLU 74	0.58	-11949	1851	618.09		59841	0.6656	10833	2163			1.17	Si
SLU 74	3.08	-11835	-1925	580.57		59270	0.6656	10833	2163			1.12	Si
SLU 73	0.58	-11436	1799	599.36		57271	0.6656	10833	2163			1.2	Si
SLU 73	3.08	-11522	-1940	579.21		57701	0.6656	10833	2163			1.12	Si
SLU 75	0.58	-11719	1834	612.04		58688	0.6656	10833	2163			1.18	Si
SLU 75	3.08	-11713	-1936	580.72		58661	0.6656	10833	2163			1.12	Si

Verifica a taglio nel piano secondo D.M. 17-01-18 (N.T.C.) §7.8.2.2.2 con rottura per scorrimento in combinazioni sismiche, γM = 2

Comb.	Quota	N	V par	M	σ0	σN	I'	fvd	Vt scorr.	Vt fess.diag.	Vt,lim	c.s.	Verifica
SLV 11	0.58	-2969	795	484.87		19464	0.5085	12226	1865			2.34	Si
SLV 11	3.08	305	1605	-379.93		0	0	8333	0			0	No, Vu<V
SLV 15	0.58	-10859	2162	1080.2		54384	0.6656	16250	3245			1.5	Si
SLV 15	3.08	318	5121	-1074.12		0	0	8333	0			0	No, Vu<V
SLV 13	0.58	-14973	2667	1176.09		74984	0.6656	16250	3245			1.22	Si
SLV 13	3.08	-3697	4443	-845.07		39417	0.3126	16217	1521			0.34	No, Vu<V
SLV 3	0.58	-2026	-57	-301.11		12223	0.5526	10778	1787			31.28	Si
SLV 3	3.08	-13102	-7183	1672.8		70972	0.6154	16250	3000			0.42	No, Vu<V
SLV 4	0.58	-2026	-57	-301.11		12223	0.5526	10778	1787			31.28	Si
SLV 4	3.08	-13102	-7183	1672.8		70972	0.6154	16250	3000			0.42	No, Vu<V
SLV 1	0.58	-6140	448	-205.22		30747	0.6656	14483	2892			6.45	Si
SLV 1	3.08	-17117	-7861	1901.85		85792	0.6651	16250	3242			0.41	No, Vu<V
SLV 2	0.58	-6140	448	-205.22		30747	0.6656	14483	2892			6.45	Si
SLV 2	3.08	-17117	-7861	1901.85		85792	0.6651	16250	3242			0.41	No, Vu<V
SLV 14	0.58	-14973	2667	1176.09		74984	0.6656	16250	3245			1.22	Si
SLV 14	3.08	-3697	4443	-845.07		39417	0.3126	16217	1521			0.34	No, Vu<V
SLV 12	0.58	-2969	795	484.87		19464	0.5085	12226	1865			2.34	Si
SLV 12	3.08	305	1605	-379.93		0	0	8333	0			0	No, Vu<V
SLV 16	0.58	-10859	2162	1080.2		54384	0.6656	16250	3245			1.5	Si
SLV 16	3.08	318	5121	-1074.12		0	0	8333	0			0	No, Vu<V

Verifica a pressoflessione fuori piano D.M. 17-01-18 (N.T.C.)

quota 1.955 Wa 0.05 denominatore 8 γM = 2

Comb.	fd	Sa	σ0	N	M	Mc	Coeff.s.	Verifica
SLV 8	143750	0.29	2813	-562	33	82.31	2.49	Si
SLV 7	143750	0.29	2813	-562	33	82.31	2.49	Si
SLV 11	143750	0.29	4087	-816	33	118.32	3.59	Si
SLV 12	143750	0.29	4087	-816	33	118.32	3.59	Si
SLV 3	143750	0.29	25229	-5038	33	599.64	18.17	Si
SLV 4	143750	0.29	25229	-5038	33	599.64	18.17	Si
SLV 15	143750	0.29	29476	-5886	33	669.88	20.3	Si
SLV 16	143750	0.29	29476	-5886	33	669.88	20.3	Si
SLV 2	143750	0.29	45717	-9129	33	856.98	25.97	Si
SLV 1	143750	0.29	45717	-9129	33	856.98	25.97	Si

Verifica dei meccanismi locali di collasso con analisi cinematica lineare

forza di aggancio al piano = 0 quota mezzeria = 1.955 Wa = 0.05 Ta = 0.0421

Comb.	N top	N base	V orto	α0	M*	e*	a0*	aLim	Verifica
SLV 2	-11895	-6140	1	0.057	1288.6	0.981	0.83901	4.57648	No
SLV 1	-11895	-6140	1	0.057	1288.6	0.981	0.83901	4.57648	No
SLV 3	-8637	-2026	-7	0.057	956.7	0.975	0.84605	4.57648	No

Comb.	N top	N base	V orto	α0	M*	e*	a0*	aLim	Verifica
SLV 4	-8637	-2026	-7	0.057	956.7	0.975	0.84605	4.57648	No
SLV 13	-4767	-14973	9	0.058	562.8	0.959	0.87801	4.57648	No
SLV 14	-4767	-14973	9	0.058	562.8	0.959	0.87801	4.57648	No
SLV 5	-13202	-14030	13	0.056	1421.8	0.983	0.82189	4.27875	No
SLV 6	-13202	-14030	13	0.056	1421.8	0.983	0.82189	4.27875	No
SLV 9	-11063	-16680	15	0.056	1203.9	0.98	0.8241	4.27875	No
SLV 10	-11063	-16680	15	0.056	1203.9	0.98	0.8241	4.27875	No

Tabella dei coefficienti di sicurezza minimi

Stato limite	Coeff.s.	Comb.	Verifica
PF_SLU	1.569	SLU 83	Si
V_SLU	1.078	SLU 82	Si
PF_SLV	0	SLV 16	No
V_SLV	0	SLV 11	No
PFFP_SLV	2.495	SLV 7	Si
R_SLV	0.183	SLV 1	No

Maschio 265

Verifiche condotte secondo D.M. 17-01-18 (N.T.C.)

Dati geometrici

X ini.	Y ini.	X fin.	Y fin.	Quota i.	Quota.s	l	Sp.	h netta	h ini.	h fin.	a	a.s.,sx	a.s.,dx
-11.662	-4.697	-11.003	-4.697	L2	Z medio 333 cm	0.659	0.3	2.75	2.75	2.75			

Caratteristiche del materiale

(Circolare 7 21-01-19 C8.5.I) Muratura in mattoni pieni e malta di calce LC2_Corti

fb	fk	fvk0	fmedio	τ0	fv0	μ	ϕ	fv,lim	E	G	FC
600000			345000	9000	20000	0.58	0.77	32500	320000000	128000000	1.2

Verifica a pressoflessione nel piano secondo D.M. 17-01-18 NTC §7.8.2.2.1 in combinazioni non sismiche, γM = 3

Comb.	Quota	N	M	σ0	Mu	c.s.	Verifica
SLU 77	0.58	-11136	-745.26	56322	1132.35	1.519	Si
SLU 77	3.08	-11506	-583.44	58195	1082.81	1.856	Si
SLU 81	0.58	-11323	-759.25	57266	1108.07	1.459	Si
SLU 81	3.08	-11662	-586.99	58984	1060.27	1.806	Si
SLU 80	0.58	-10872	-730.92	54986	1164.25	1.593	Si
SLU 80	3.08	-11330	-578.21	57304	1107.07	1.915	Si
SLU 79	0.58	-11102	-742.03	56149	1136.63	1.532	Si
SLU 79	3.08	-11477	-582.27	58049	1086.89	1.867	Si
SLU 78	0.58	-10906	-734.15	55158	1160.29	1.58	Si
SLU 78	3.08	-11359	-579.39	57451	1103.17	1.904	Si
SLU 84	0.58	-11147	-750.22	56379	1130.91	1.507	Si
SLU 84	3.08	-11619	-591.56	58766	1066.61	1.803	Si
SLU 75	0.58	-10851	-732.07	54882	1166.61	1.594	Si
SLU 75	3.08	-11255	-570.76	56924	1117.03	1.957	Si
SLU 74	0.58	-11081	-743.18	56045	1139.18	1.533	Si
SLU 74	3.08	-11402	-574.82	57669	1097.29	1.909	Si
SLU 82	0.58	-11092	-748.14	56103	1137.77	1.521	Si
SLU 82	3.08	-11515	-582.94	58240	1081.57	1.855	Si
SLU 83	0.58	-11377	-761.33	57543	1100.7	1.446	Si
SLU 83	3.08	-11766	-595.62	59510	1044.68	1.754	Si

Verifica a pressoflessione nel piano secondo D.M. 17-01-18 NTC §7.8.2.2.1 in combinazioni sismiche, γM = 2

Comb.	Quota	N	M	σ0	Mu	c.s.	Verifica
SLV 11	0.58	177	-29.5	0	0	0	No, Trazione
SLV 11	3.08	-3823	-500.88	19336	1060.43	2.117	Si
SLV 7	0.58	-2267	-444.32	11466	676.93	1.524	Si
SLV 7	3.08	122	258.7	0	0	0	No, Trazione
SLV 1	0.58	-14088	-1314.02	71252	1935.2	1.473	Si
SLV 1	3.08	-3371	780.17	17049	955.8	1.225	Si
SLV 8	0.58	-2267	-444.32	11466	676.93	1.524	Si
SLV 8	3.08	122	258.7	0	0	0	No, Trazione
SLV 4	0.58	-9948	-1135.98	50315	1928.26	1.697	Si
SLV 4	3.08	365	948.5	0	0	0	No, Trazione
SLV 2	0.58	-14088	-1314.02	71252	1935.2	1.473	Si
SLV 2	3.08	-3371	780.17	17049	955.8	1.225	Si
SLV 3	0.58	-9948	-1135.98	50315	1928.26	1.697	Si
SLV 3	3.08	365	948.5	0	0	0	No, Trazione
SLV 12	0.58	177	-29.5	0	0	0	No, Trazione
SLV 12	3.08	-3823	-500.88	19336	1060.43	2.117	Si
SLV 14	0.58	-5940	68.7	30045	1476.17	21.486	Si
SLV 14	3.08	-16521	-1751.76	83559	1721.1	0.982	No, M>Mu
SLV 13	0.58	-5940	68.7	30045	1476.17	21.486	Si
SLV 13	3.08	-16521	-1751.76	83559	1721.1	0.982	No, M>Mu

Verifica a taglio nel piano secondo D.M. 17-01-18 (N.T.C.) §7.8.2.2.2 con rottura per scorrimento in combinazioni non sismiche, γM = 3

Comb.	Quota	N	V par	M	σ0	σN	l'	fvd	Vt scorr.	Vt fess.diag.	Vt,lim	c.s.	Verifica
SLU 84	0.58	-11147	-1955	-750.22		56379	0.6591	10833	2142			1.1	Si
SLU 84	3.08	-11619	2030	-591.56		58766	0.6591	10833	2142			1.06	Si
SLU 75	0.58	-10851	-1903	-732.07		54882	0.6591	10833	2142			1.13	Si
SLU 75	3.08	-11255	1953	-570.76		56924	0.6591	10833	2142			1.1	Si
SLU 78	0.58	-10906	-1909	-734.15		55158	0.6591	10833	2142			1.12	Si
SLU 78	3.08	-11359	1989	-579.39		57451	0.6591	10833	2142			1.08	Si
SLU 82	0.58	-11092	-1948	-748.14		56103	0.6591	10833	2142			1.1	Si

Comb.	Quota	N	V par	M	σ0	σN	l'	fvd	Vt scorr.	Vt fess.diag.	Vt,lim	c.s.	Verifica
SLU 82	3.08	-11515	1994	-582.94		58240	0.6591	10833	2142			1.07	Si
SLU 79	0.58	-11102	-1932	-742.03		56149	0.6591	10833	2142			1.11	Si
SLU 79	3.08	-11477	1992	-582.27		58049	0.6591	10833	2142			1.08	Si
SLU 81	0.58	-11323	-1980	-759.25		57266	0.6591	10833	2142			1.08	Si
SLU 81	3.08	-11662	2001	-586.99		58984	0.6591	10833	2142			1.07	Si
SLU 83	0.58	-11377	-1987	-761.33		57543	0.6591	10833	2142			1.08	Si
SLU 83	3.08	-11766	2036	-595.62		59510	0.6591	10833	2142			1.05	Si
SLU 77	0.58	-11136	-1941	-745.26		56322	0.6591	10833	2142			1.1	Si
SLU 77	3.08	-11506	1996	-583.44		58195	0.6591	10833	2142			1.07	Si
SLU 74	0.58	-11081	-1935	-743.18		56045	0.6591	10833	2142			1.11	Si
SLU 74	3.08	-11402	1960	-574.82		57669	0.6591	10833	2142			1.09	Si
SLU 80	0.58	-10872	-1900	-730.92		54986	0.6591	10833	2142			1.13	Si
SLU 80	3.08	-11330	1986	-578.21		57304	0.6591	10833	2142			1.08	Si

Verifica a taglio nel piano secondo D.M. 17-01-18 (N.T.C.) §7.8.2.2.2 con rottura per scorrimento in combinazioni sismiche, γM = 2

Comb.	Quota	N	V par	M	σ0	σN	l'	fvd	Vt scorr.	Vt fess.diag.	Vt,lim	c.s.	Verifica
SLV 1	0.58	-14088	-2760	-1314.02		71252	0.6591	16250	3213			1.16	Si
SLV 1	3.08	-3371	-4293	780.17		38187	0.2942	15971	1410			0.33	No, Vu<V
SLV 3	0.58	-9948	-2175	-1135.98		51331	0.646	16250	3149			1.45	Si
SLV 3	3.08	365	-4786	948.5		0	0	8333	0			0	No, Vu<V
SLV 7	0.58	-2267	-730	-444.32		18863	0.4006	12106	1455			1.99	Si
SLV 7	3.08	122	-1231	258.7		0	0	8333	0			0	No, Vu<V
SLV 2	0.58	-14088	-2760	-1314.02		71252	0.6591	16250	3213			1.16	Si
SLV 2	3.08	-3371	-4293	780.17		38187	0.2942	15971	1410			0.33	No, Vu<V
SLV 14	0.58	-5940	-583	68.7		30045	0.6591	14342	2836			4.86	Si
SLV 14	3.08	-16521	7505	-1751.76		83559	0.6591	16250	3213			0.43	No, Vu<V
SLV 12	0.58	177	-77	-29.5		0	0	8333	0			0	No, Vu<V
SLV 12	3.08	-3823	2308	-500.88		21398	0.5955	12613	2253			0.98	No, Vu<V
SLV 13	0.58	-5940	-583	68.7		30045	0.6591	14342	2836			4.86	Si
SLV 13	3.08	-16521	7505	-1751.76		83559	0.6591	16250	3213			0.43	No, Vu<V
SLV 8	0.58	-2267	-730	-444.32		18863	0.4006	12106	1455			1.99	Si
SLV 8	3.08	122	-1231	258.7		0	0	8333	0			0	No, Vu<V
SLV 11	0.58	177	-77	-29.5		0	0	8333	0			0	No, Vu<V
SLV 11	3.08	-3823	2308	-500.88		21398	0.5955	12613	2253			0.98	No, Vu<V
SLV 4	0.58	-9948	-2175	-1135.98		51331	0.646	16250	3149			1.45	Si
SLV 4	3.08	365	-4786	948.5		0	0	8333	0			0	No, Vu<V

Verifica a pressoflessione fuori piano D.M. 17-01-18 (N.T.C.)

quota 1.955 Wa 0.05 denominatore 8 γM = 2

Comb.	fd	Sa	σ0	N	M	Mc	Coeff.s.	Verifica
SLV 12	143750	0.29	3242	-641	32.67	93.61	2.86	Si
SLV 11	143750	0.29	3242	-641	32.67	93.61	2.86	Si
SLV 7	143750	0.29	4474	-884	32.67	127.82	3.91	Si
SLV 8	143750	0.29	4474	-884	32.67	127.82	3.91	Si
SLV 16	143750	0.29	24514	-4847	32.67	581.16	17.79	Si
SLV 15	143750	0.29	24514	-4847	32.67	581.16	17.79	Si
SLV 4	143750	0.29	28618	-5658	32.67	649.95	19.89	Si
SLV 3	143750	0.29	28618	-5658	32.67	649.95	19.89	Si
SLV 14	143750	0.29	43977	-8695	32.67	834.83	25.55	Si
SLV 13	143750	0.29	43977	-8695	32.67	834.83	25.55	Si

Verifica dei meccanismi locali di collasso con analisi cinematica lineare

forza di aggancio al piano = 0 quota mezzeria = 1.955 Wa = 0.05 Ta = 0.0421

Comb.	N top	N base	V orto	α0	M*	e*	a0*	aLim	Verifica
SLV 11	-2350	177	-15	0	0	0	0	4.27875	No, Trazione
SLV 12	-2350	177	-15	0	0	0	0	4.27875	No, Trazione
SLV 13	-11574	-5940	2	0.057	1255.1	0.981	0.83809	4.57648	No
SLV 14	-11574	-5940	2	0.057	1255.1	0.981	0.83809	4.57648	No
SLV 16	-8482	-1801	-7	0.057	940.1	0.975	0.84646	4.57648	No
SLV 15	-8482	-1801	-7	0.057	940.1	0.975	0.84646	4.57648	No
SLV 10	-12656	-13621	15	0.055	1365.4	0.982	0.81973	4.27875	No
SLV 9	-12656	-13621	15	0.055	1365.4	0.982	0.81973	4.27875	No
SLV 6	-10492	-16066	17	0.055	1144.9	0.979	0.82204	4.27875	No
SLV 5	-10492	-16066	17	0.055	1144.9	0.979	0.82204	4.27875	No

Tabella dei coefficienti di sicurezza minimi

Stato limite	Coeff.s.	Comb.	Verifica
PF_SLU	1.446	SLU 83	Si
V_SLU	1.052	SLU 83	Si
PF_SLV	0	SLV 12	No
V_SLV	0	SLV 3	No
PFFP_SLV	2.865	SLV 11	Si
R_SLV	0	SLV 12	No

Maschio 266

Verifiche condotte secondo D.M. 17-01-18 (N.T.C.)

Dati geometrici

X ini.	Y ini.	X fin.	Y fin.	Quota i.	Quota.s	l	Sp.	h netta	h ini.	h fin.	a	a.s.,sx	a.s.,dx
-13.727	-4.696	-12.933	-4.696	Z medio 333 cm	Z medio 676 cm	0.795	0.3	3.43	3.43	3.43			

Caratteristiche del materiale

(Circolare 7 21-01-19 C8.5.I) Muratura in mattoni pieni e malta di calce LC2_Corti

fb	fk	fvk0	fmedio	τ0	fv0	μ	ϕ	fv,lim	E	G	FC

fb	fk	fvk0	fmedio	τ0	fv0	μ	ϕ	fv,lim	E	G	FC
600000			345000	9000	20000	0.58	0.77	32500	320000000	128000000	1.2

Verifica a pressoflessione nel piano secondo D.M. 17-01-18 NTC §7.8.2.2.1 in combinazioni non sismiche, γM = 3

Comb.	Quota	N	M	σ0	Mu	c.s.	Verifica
SLU 61	4.28	-9821	241.07	41203	1928.14	7.998	Si
SLU 61	6.28	-8692	302.83	36464	1907.26	6.298	Si
SLU 63	4.28	-9941	249.9	41706	1927.29	7.712	Si
SLU 63	6.28	-8798	299.99	36910	1911.45	6.372	Si
SLU 83	4.28	-10699	269.94	44888	1908.3	7.069	Si
SLU 83	6.28	-9388	308.15	39387	1926.3	6.251	Si
SLU 60	4.28	-9926	243.12	41643	1927.43	7.928	Si
SLU 60	6.28	-8724	300.81	36600	1908.58	6.345	Si
SLU 84	4.28	-10595	267.9	44448	1912.33	7.138	Si
SLU 84	6.28	-9356	310.17	39251	1925.86	6.209	Si
SLU 76	4.28	-10191	260.37	42756	1923.63	7.388	Si
SLU 76	6.28	-9026	301.6	37869	1918.89	6.362	Si
SLU 82	4.28	-10475	259.06	43945	1916.38	7.397	Si
SLU 82	6.28	-9250	313.01	38805	1924.1	6.147	Si
SLU 81	4.28	-10580	261.11	44385	1912.86	7.326	Si
SLU 81	6.28	-9282	310.99	38941	1924.68	6.189	Si
SLU 75	4.28	-10295	262.08	43192	1921.35	7.331	Si
SLU 75	6.28	-9081	301.68	38096	1920.34	6.366	Si
SLU 73	4.28	-10072	251.54	42253	1925.7	7.656	Si
SLU 73	6.28	-8920	304.44	37423	1915.69	6.293	Si

Verifica a pressoflessione nel piano secondo D.M. 17-01-18 NTC §7.8.2.2.1 in combinazioni sismiche, γM = 2

Comb.	Quota	N	M	σ0	Mu	c.s.	Verifica
SLV 8	4.28	-784	-367.95	0	0	0	No, e>l/2
SLV 8	6.28	-4405	579.41	18479	1485.2	2.563	Si
SLV 12	4.28	-2941	557.92	12340	1050.49	1.883	Si
SLV 12	6.28	-392	-552.55	0	0	0	No, e>l/2
SLV 14	4.28	-12607	1755.39	52890	2840.44	1.618	Si
SLV 14	6.28	-956	-1607.01	0	0	0	No, e>l/2
SLV 3	4.28	-2117	-1384.97	0	0	0	No, e>l/2
SLV 3	6.28	-11910	2043.34	49967	2796.65	1.369	Si
SLV 13	4.28	-12607	1755.39	52890	2840.44	1.618	Si
SLV 13	6.28	-956	-1607.01	0	0	0	No, e>l/2
SLV 16	4.28	-9307	1701.26	39048	2515.93	1.479	Si
SLV 16	6.28	1464	-1729.85	0	0	0	No, Trazione
SLV 11	4.28	-2941	557.92	12340	1050.49	1.883	Si
SLV 11	6.28	-392	-552.55	0	0	0	No, e>l/2
SLV 15	4.28	-9307	1701.26	39048	2515.93	1.479	Si
SLV 15	6.28	1464	-1729.85	0	0	0	No, Trazione
SLV 4	4.28	-2117	-1384.97	0	0	0	No, e>l/2
SLV 4	6.28	-11910	2043.34	49967	2796.65	1.369	Si
SLV 7	4.28	-784	-367.95	0	0	0	No, e>l/2
SLV 7	6.28	-4405	579.41	18479	1485.2	2.563	Si

Verifica a taglio nel piano secondo D.M. 17-01-18 (N.T.C.) §7.8.2.2.2 con rottura per scorrimento in combinazioni non sismiche, γM = 3

Comb.	Quota	N	V par	M	σ0	σN	l'	fvd	Vt scorr.	Vt fess.diag.	Vt,lim	c.s.	Verifica
SLU 2	4.28	-6778	2	172.55		28437	0.7945	9347	2228			1000	Si
SLU 2	6.28	-6015	-229	212.01		25234	0.7945	8920	2126			9.29	Si
SLU 54	4.28	-9642	33	244.08		40450	0.7945	10833	2582			78.58	Si
SLU 54	6.28	-8523	-262	291.49		35755	0.7945	10323	2461			9.41	Si
SLU 52	4.28	-9418	9	233.55		39511	0.7945	10824	2580			296.68	Si
SLU 52	6.28	-8362	-290	294.25		35082	0.7945	10233	2439			8.4	Si
SLU 47	4.28	-8760	14	228.01		36750	0.7945	10456	2492			175.77	Si
SLU 47	6.28	-7750	-280	268.27		32515	0.7945	9891	2358			8.41	Si
SLU 43	4.28	-8815	19	222.58		36980	0.7945	10486	2500			134.64	Si
SLU 43	6.28	-7698	-254	267.74		32295	0.7945	9862	2351			9.27	Si
SLU 44	4.28	-8640	-2	219.17		36247	0.7945	10389	2476			1000	Si
SLU 44	6.28	-7644	-295	271.11		32069	0.7945	9831	2343			7.94	Si
SLU 55	4.28	-9538	25	242.38		40014	0.7945	10833	2582			103.38	Si
SLU 55	6.28	-8469	-275	291.41		35528	0.7945	10293	2453			8.91	Si
SLU 65	4.28	-9294	28	237.17		38989	0.7945	10754	2563			92.18	Si
SLU 65	6.28	-8202	-265	281.29		34410	0.7945	10144	2418			9.11	Si
SLU 46	4.28	-8864	22	229.71		37186	0.7945	10514	2506			113.58	Si
SLU 46	6.28	-7804	-267	268.34		32742	0.7945	9921	2365			8.87	Si
SLU 61	4.28	-9821	22	241.07		41203	0.7945	10833	2582			119.6	Si
SLU 61	6.28	-8692	-271	302.83		36464	0.7945	10417	2483			9.15	Si

Verifica a taglio nel piano secondo D.M. 17-01-18 (N.T.C.) §7.8.2.2.2 con rottura per scorrimento in combinazioni sismiche, γM = 2

Comb.	Quota	N	V par	M	σ0	σN	l'	fvd	Vt scorr.	Vt fess.diag.	Vt,lim	c.s.	Verifica
SLV 12	4.28	-2941	972	557.92		15744	0.6228	11482	2145			2.21	Si
SLV 12	6.28	-392	1513	-552.55		0	0	8333	0			0	No, Vu<V
SLV 3	4.28	-2117	-6202	-1384.97		0	0	8333	0			0	No, Vu<V
SLV 3	6.28	-11910	-5723	2043.34		58631	0.6771	16250	3301			0.58	No, Vu<V
SLV 4	4.28	-2117	-6202	-1384.97		0	0	8333	0			0	No, Vu<V
SLV 4	6.28	-11910	-5723	2043.34		58631	0.6771	16250	3301			0.58	No, Vu<V
SLV 7	4.28	-784	-2615	-367.95		0	0	8333	0			0	No, Vu<V
SLV 7	6.28	-4405	-1819	579.41		18479	0.7945	12029	2867			1.58	Si
SLV 16	4.28	-9307	5756	1701.26		48216	0.6435	16250	3137			0.54	No, Vu<V
SLV 16	6.28	1464	5383	-1729.85		0	0	8333	0			0	No, Vu<V
SLV 15	4.28	-9307	5756	1701.26		48216	0.6435	16250	3137			0.54	No, Vu<V
SLV 15	6.28	1464	5383	-1729.85		0	0	8333	0			0	No, Vu<V
SLV 11	4.28	-2941	972	557.92		15744	0.6228	11482	2145			2.21	Si
SLV 11	6.28	-392	1513	-552.55		0	0	8333	0			0	No, Vu<V
SLV 8	4.28	-784	-2615	-367.95		0	0	8333	0			0	No, Vu<V
SLV 8	6.28	-4405	-1819	579.41		18479	0.7945	12029	2867			1.58	Si

Comb.	Quota	N	V par	M	σ0	σN	l'	fvd	Vt scorr.	Vt fess.diag.	Vt,lim	c.s.	Verifica
SLV 13	4.28	-12607	6269	1755.39		54287	0.7741	16250	3774			0.6	No, Vu<V
SLV 13	6.28	-956	5369	-1607.01		0	0	8333	0			0	No, Vu<V
SLV 14	4.28	-12607	6269	1755.39		54287	0.7741	16250	3774			0.6	No, Vu<V
SLV 14	6.28	-956	5369	-1607.01		0	0	8333	0			0	No, Vu<V

Verifica a pressoflessione fuori piano D.M. 17-01-18 (N.T.C.)

quota 5.045 Wa 0.05 denominatore 8 γM = 2

Comb.	fd	Sa	σ0	N	M	Mc	Coeff.s.	Verifica
SLV 12	143750	0.35	9744	-2323	75.11	320.62	4.27	Si
SLV 11	143750	0.35	9744	-2323	75.11	320.62	4.27	Si
SLV 8	143750	0.35	11370	-2710	75.11	368.7	4.91	Si
SLV 7	143750	0.35	11370	-2710	75.11	368.7	4.91	Si
SLV 15	143750	0.35	21710	-5175	75.11	638.31	8.5	Si
SLV 16	143750	0.35	21710	-5175	75.11	638.31	8.5	Si
SLV 3	143750	0.35	27129	-6467	75.11	754.63	10.05	Si
SLV 4	143750	0.35	27129	-6467	75.11	754.63	10.05	Si
SLV 14	143750	0.35	33592	-8007	75.11	870.87	11.59	Si
SLV 13	143750	0.35	33592	-8007	75.11	870.87	11.59	Si

Verifica dei meccanismi locali di collasso con analisi cinematica lineare

forza di aggancio al piano = 0 quota mezzeria = 5.045 Wa = 0.05 Ta = 0.0655

Comb.	N top	N base	V orto	α0	M*	e*	a0*	aLim	Verifica
SLV 3	-8250	-8928	20	0.045	955.1	0.964	0.67961	7.41986	No
SLV 4	-8250	-8928	20	0.045	955.1	0.964	0.67961	7.41986	No
SLV 2	-10118	-12113	8	0.046	1145.3	0.969	0.68954	7.41986	No
SLV 1	-10118	-12113	8	0.046	1145.3	0.969	0.68954	7.41986	No
SLV 9	-7098	-10989	-25	0.045	837.9	0.959	0.67622	6.64296	No
SLV 10	-7098	-10989	-25	0.045	837.9	0.959	0.67622	6.64296	No
SLV 6	-9498	-13223	-17	0.045	1082.1	0.968	0.6794	6.64296	No
SLV 5	-9498	-13223	-17	0.045	1082.1	0.968	0.6794	6.64296	No
SLV 14	-2117	-4666	-20	0.048	333.8	0.913	0.76264	7.41986	No
SLV 13	-2117	-4666	-20	0.048	333.8	0.913	0.76264	7.41986	No

Tabella dei coefficienti di sicurezza minimi

Stato limite	Coeff.s.	Comb.	Verifica
PF_SLU	6.147	SLU 82	Si
V_SLU	7.937	SLU 44	Si
PF_SLV	0	SLV 16	No
V_SLV	0	SLV 3	No
PFFP_SLV	4.269	SLV 11	Si
R_SLV	0.092	SLV 3	No

Maschio 267

Verifiche condotte secondo D.M. 17-01-18 (N.T.C.)

Dati geometrici

X ini.	Y ini.	X fin.	Y fin.	Quota i.	Quota.s	l	Sp.	h netta	h ini.	h fin.	a	a.s.,sx	a.s.,dx
-11.933	-4.696	-11.003	-4.697	Z medio 333 cm	Z medio 676 cm	0.93	0.3	3.43	3.43	3.43			

Caratteristiche del materiale

(Circolare 7 21-01-19 C8.5.I) Muratura in mattoni pieni e malta di calce LC2_Corti

fb	fk	fvk0	fmedio	τ0	fv0	μ	ϕ	fv,lim	E	G	FC
600000			345000	9000	20000	0.58	0.77	32500	320000000	128000000	1.2

Verifica a pressoflessione nel piano secondo D.M. 17-01-18 NTC §7.8.2.2.1 in combinazioni non sismiche, γM = 3

Comb.	Quota	N	M	σ0	Mu	c.s.	Verifica
SLU 75	4.28	-10718	-244.77	38411	2634.07	10.762	Si
SLU 75	6.28	-10156	-505.08	36398	2612.74	5.173	Si
SLU 78	4.28	-10804	-241.27	38721	2636.2	10.926	Si
SLU 78	6.28	-10319	-520.92	36982	2620.26	5.03	Si
SLU 84	4.28	-11013	-245.7	39467	2640.09	10.745	Si
SLU 84	6.28	-10472	-525.2	37528	2626.31	5.001	Si
SLU 82	4.28	-10926	-249.19	39157	2638.69	10.589	Si
SLU 82	6.28	-10309	-509.37	36944	2619.81	5.143	Si
SLU 81	4.28	-11039	-245.36	39562	2640.46	10.761	Si
SLU 81	6.28	-10370	-510.97	37164	2622.39	5.132	Si
SLU 74	4.28	-10831	-240.94	38817	2636.8	10.944	Si
SLU 74	6.28	-10218	-506.69	36618	2615.7	5.162	Si
SLU 83	4.28	-11126	-241.87	39872	2641.46	10.921	Si
SLU 83	6.28	-10533	-526.8	37748	2628.48	4.989	Si
SLU 80	4.28	-10769	-239.44	38595	2635.37	11.006	Si
SLU 80	6.28	-10290	-520.5	36877	2618.99	5.032	Si
SLU 77	4.28	-10918	-237.44	39126	2638.54	11.112	Si
SLU 77	6.28	-10381	-522.52	37202	2622.81	5.02	Si
SLU 79	4.28	-10882	-235.61	39000	2637.87	11.196	Si
SLU 79	6.28	-10351	-522.1	37098	2621.62	5.021	Si

Verifica a pressoflessione nel piano secondo D.M. 17-01-18 NTC §7.8.2.2.1 in combinazioni sismiche, γM = 2

Comb.	Quota	N	M	σ0	Mu	c.s.	Verifica
SLV 12	4.28	-333	668.12	0	0	0	No, e>l/2
SLV 12	6.28	-4921	-932.46	17637	1958.32	2.1	Si
SLV 7	4.28	-2457	-674.27	8805	1060.29	1.572	Si
SLV 7	6.28	-802	465.92	0	0	0	No, e>l/2

Comb.	Quota	N	M	σ0	Mu	c.s.	Verifica
SLV 4	4.28	-9369	-2365.53	33578	3159.85	1.336	Si
SLV 4	6.28	979	2018.46	0	0	0	No, Trazione
SLV 2	4.28	-13170	-2472.79	47198	3758.88	1.52	Si
SLV 2	6.28	-1613	1950.82	0	0	0	No, e>l/2
SLV 16	4.28	-2288	2109.12	0	0	0	No, e>l/2
SLV 16	6.28	-12752	-2642.82	45699	3712.24	1.405	Si
SLV 15	4.28	-2288	2109.12	0	0	0	No, e>l/2
SLV 15	6.28	-12752	-2642.82	45699	3712.24	1.405	Si
SLV 1	4.28	-13170	-2472.79	47198	3758.88	1.52	Si
SLV 1	6.28	-1613	1950.82	0	0	0	No, e>l/2
SLV 3	4.28	-9369	-2365.53	33578	3159.85	1.336	Si
SLV 3	6.28	979	2018.46	0	0	0	No, Trazione
SLV 8	4.28	-2457	-674.27	8805	1060.29	1.572	Si
SLV 8	6.28	-802	465.92	0	0	0	No, e>l/2
SLV 11	4.28	-333	668.12	0	0	0	No, e>l/2
SLV 11	6.28	-4921	-932.46	17637	1958.32	2.1	Si

Verifica a taglio nel piano secondo D.M. 17-01-18 (N.T.C.) §7.8.2.2.2 con rottura per scorrimento in combinazioni non sismiche, γM = 3

Comb.	Quota	N	V par	M	σ0	σN	l'	fvd	Vt scorr.	Vt fess.diag.	Vt,lim	c.s.	Verifica
SLU 80	4.28	-10769	309	-239.44		38595	0.9301	10702	2986			9.67	Si
SLU 80	6.28	-10290	514	-520.5		36877	0.9301	10473	2922			5.69	Si
SLU 78	4.28	-10804	305	-241.27		38721	0.9301	10718	2991			9.79	Si
SLU 78	6.28	-10319	512	-520.92		36982	0.9301	10486	2926			5.71	Si
SLU 59	4.28	-10147	286	-231.88		36363	0.9301	10404	2903			10.15	Si
SLU 59	6.28	-9649	498	-483.74		34581	0.9301	10166	2837			5.69	Si
SLU 49	4.28	-9412	253	-227.26		33731	0.9301	10053	2805			11.1	Si
SLU 49	6.28	-8874	468	-436.23		31804	0.9301	9796	2733			5.84	Si
SLU 72	4.28	-10000	279	-232.99		35836	0.9301	10334	2883			10.35	Si
SLU 72	6.28	-9486	485	-472.57		33995	0.9301	10088	2815			5.8	Si
SLU 57	4.28	-10182	283	-233.71		36489	0.9301	10421	2908			10.28	Si
SLU 57	6.28	-9678	497	-484.16		34686	0.9301	10180	2841			5.72	Si
SLU 76	4.28	-10607	273	-245.49		38014	0.9301	10624	2964			10.86	Si
SLU 76	6.28	-10086	494	-503.59		36146	0.9301	10375	2895			5.86	Si
SLU 55	4.28	-9985	250	-237.93		35783	0.9301	10327	2881			11.51	Si
SLU 55	6.28	-9445	479	-466.83		33850	0.9301	10069	2810			5.87	Si
SLU 70	4.28	-10035	275	-234.82		35963	0.9301	10351	2888			10.49	Si
SLU 70	6.28	-9515	484	-472.99		34100	0.9301	10102	2819			5.83	Si
SLU 51	4.28	-9377	256	-225.43		33605	0.9301	10036	2800			10.94	Si
SLU 51	6.28	-8845	470	-435.81		31699	0.9301	9782	2730			5.81	Si

Verifica a taglio nel piano secondo D.M. 17-01-18 (N.T.C.) §7.8.2.2.2 con rottura per scorrimento in combinazioni sismiche, γM = 2

Comb.	Quota	N	V par	M	σ0	σN	l'	fvd	Vt scorr.	Vt fess.diag.	Vt,lim	c.s.	Verifica
SLV 7	4.28	-2457	-1074	-674.27		14321	0.5719	11198	1921			1.79	Si
SLV 7	6.28	-802	-1368	465.92		0	0	8333	0			0	No, Vu<V
SLV 15	4.28	-2288	7288	2109.12		0	0	8333	0			0	No, Vu<V
SLV 15	6.28	-12752	6416	-2642.82		54959	0.7734	16250	3770			0.59	No, Vu<V
SLV 2	4.28	-13170	-6936	-2472.79		52771	0.8319	16250	4055			0.58	No, Vu<V
SLV 2	6.28	-1613	-5805	1950.82		0	0	8333	0			0	No, Vu<V
SLV 11	4.28	-333	3047	668.12		0	0	8333	0			0	No, Vu<V
SLV 11	6.28	-4921	2273	-932.46		19842	0.8267	12302	3051			1.34	Si
SLV 1	4.28	-13170	-6936	-2472.79		52771	0.8319	16250	4055			0.58	No, Vu<V
SLV 1	6.28	-1613	-5805	1950.82		0	0	8333	0			0	No, Vu<V
SLV 12	4.28	-333	3047	668.12		0	0	8333	0			0	No, Vu<V
SLV 12	6.28	-4921	2273	-932.46		19842	0.8267	12302	3051			1.34	Si
SLV 8	4.28	-2457	-1074	-674.27		14321	0.5719	11198	1921			1.79	Si
SLV 8	6.28	-802	-1368	465.92		0	0	8333	0			0	No, Vu<V
SLV 16	4.28	-2288	7288	2109.12		0	0	8333	0			0	No, Vu<V
SLV 16	6.28	-12752	6416	-2642.82		54959	0.7734	16250	3770			0.59	No, Vu<V
SLV 4	4.28	-9369	-6450	-2365.53		48972	0.6377	16250	3109			0.48	No, Vu<V
SLV 4	6.28	979	-5717	2018.46		0	0	8333	0			0	No, Vu<V
SLV 3	4.28	-9369	-6450	-2365.53		48972	0.6377	16250	3109			0.48	No, Vu<V
SLV 3	6.28	979	-5717	2018.46		0	0	8333	0			0	No, Vu<V

Verifica a pressoflessione fuori piano D.M. 17-01-18 (N.T.C.)

quota 5.045 Wa 0.05 denominatore 8 γM = 2

Comb.	fd	Sa	σ0	N	M	Mc	Coeff.s.	Verifica
SLV 8	143750	0.35	7678	-2142	87.93	301.17	3.43	Si
SLV 7	143750	0.35	7678	-2142	87.93	301.17	3.43	Si
SLV 12	143750	0.35	9530	-2659	87.93	367.76	4.18	Si
SLV 11	143750	0.35	9530	-2659	87.93	367.76	4.18	Si
SLV 4	143750	0.35	19278	-5379	87.93	679.57	7.73	Si
SLV 3	143750	0.35	19278	-5379	87.93	679.57	7.73	Si
SLV 15	143750	0.35	25450	-7102	87.93	843.35	9.59	Si
SLV 16	143750	0.35	25450	-7102	87.93	843.35	9.59	Si
SLV 1	143750	0.35	31072	-8670	87.93	969.8	11.03	Si
SLV 2	143750	0.35	31072	-8670	87.93	969.8	11.03	Si

Verifica dei meccanismi locali di collasso con analisi cinematica lineare

forza di aggancio al piano = 0 quota mezzeria = 5.045 Wa = 0.05 Ta = 0.0655

Comb.	N top	N base	V orto	α0	M*	e*	a0*	aLim	Verifica
SLV 15	-8782	-9889	23	0.045	1029	0.961	0.68517	7.41986	No
SLV 16	-8782	-9889	23	0.045	1029	0.961	0.68517	7.41986	No
SLV 14	-10872	-13222	3	0.047	1241.7	0.967	0.70143	7.41986	No
SLV 13	-10872	-13222	3	0.047	1241.7	0.967	0.70143	7.41986	No
SLV 6	-8130	-11263	-36	0.044	962.7	0.958	0.66562	6.64296	No
SLV 5	-8130	-11263	-36	0.044	962.7	0.958	0.66562	6.64296	No
SLV 9	-10521	-13962	-28	0.045	1205.9	0.966	0.66994	6.64296	No
SLV 10	-10521	-13962	-28	0.045	1205.9	0.966	0.66994	6.64296	No
SLV 1	-2902	-4227	-23	0.048	433.2	0.919	0.7554	7.41986	No

Comb.	N top	N base	V orto	α0	M*	e*	a0*	aLim	Verifica
SLV 2	-2902	-4227	-23	0.048	433.2	0.919	0.7554	7.41986	No

Tabella dei coefficienti di sicurezza minimi

Stato limite	Coeff.s.	Comb.	Verifica
PF_SLU	4.989	SLU 83	Si
V_SLU	5.685	SLU 80	Si
PF_SLV	0	SLV 4	No
V_SLV	0	SLV 1	No
PFFP_SLV	3.425	SLV 7	Si
R_SLV	0.092	SLV 15	No

Maschio 268

Verifiche condotte secondo D.M. 17-01-18 (N.T.C.)

Dati geometrici

X ini.	Y ini.	X fin.	Y fin.	Quota i.	Quota.s	l	Sp.	h netta	h ini.	h fin.	a	a.s.,sx	a.s.,dx
-13.727	-4.696	-12.933	-4.696	Z medio 676 cm	Z medio 1024 cm	0.795	0.3	3.48	3.48	3.48			

Caratteristiche del materiale

(Circolare 7 21-01-19 C8.5.I) Muratura in mattoni pieni e malta di calce LC2_Corti

fb	fk	fvk0	fmedio	τ0	fv0	μ	ϕ	fv,lim	E	G	FC
600000			345000	9000	20000	0.58	0.77	32500	320000000	128000000	1.2

Verifica a pressoflessione nel piano secondo D.M. 17-01-18 NTC §7.8.2.2.1 in combinazioni non sismiche, γM = 3

Comb.	Quota	N	M	σ0	Mu	c.s.	Verifica
SLU 70	7.71	-7067	258.46	29646	1785.62	6.909	Si
SLU 70	9.71	-5698	212.65	23906	1599.41	7.521	Si
SLU 78	7.71	-7564	271.11	31734	1834.34	6.766	Si
SLU 78	9.71	-6090	225.75	25548	1660.5	7.356	Si
SLU 84	7.71	-7583	264.52	31814	1836	6.941	Si
SLU 84	9.71	-6064	227.73	25440	1656.65	7.275	Si
SLU 71	7.71	-7054	259.8	29596	1784.31	6.868	Si
SLU 71	9.71	-5625	205.45	23598	1587.23	7.726	Si
SLU 69	7.71	-7080	260.22	29703	1787.08	6.868	Si
SLU 69	9.71	-5639	205.46	23657	1589.6	7.737	Si
SLU 72	7.71	-7041	258.04	29539	1782.83	6.909	Si
SLU 72	9.71	-5684	212.64	23847	1597.08	7.511	Si
SLU 79	7.71	-7552	272.45	31683	1833.27	6.729	Si
SLU 79	9.71	-6016	218.54	25240	1649.49	7.548	Si
SLU 80	7.71	-7538	270.69	31626	1832.07	6.768	Si
SLU 80	9.71	-6076	225.73	25489	1658.39	7.347	Si
SLU 83	7.71	-7597	266.28	31871	1837.17	6.899	Si
SLU 83	9.71	-6004	220.54	25191	1647.73	7.471	Si
SLU 77	7.71	-7578	272.87	31791	1835.52	6.727	Si
SLU 77	9.71	-6030	218.56	25299	1651.63	7.557	Si

Verifica a pressoflessione nel piano secondo D.M. 17-01-18 NTC §7.8.2.2.1 in combinazioni sismiche, γM = 2

Comb.	Quota	N	M	σ0	Mu	c.s.	Verifica
SLV 13	7.71	-10042	1441.43	42131	2613.92	1.813	Si
SLV 13	9.71	-130	-1071.03	0	0	0	No, e>l/2
SLV 16	7.71	-8416	1391.35	35309	2377.34	1.709	Si
SLV 16	9.71	965	-1181.09	0	0	0	No, Trazione
SLV 4	7.71	-368	-1077.89	0	0	0	No, e>l/2
SLV 4	9.71	-8041	1380.51	33735	2312.52	1.675	Si
SLV 14	7.71	-10042	1441.43	42131	2613.92	1.813	Si
SLV 14	9.71	-130	-1071.03	0	0	0	No, e>l/2
SLV 12	7.71	-3702	468.69	15532	1283.82	2.739	Si
SLV 12	9.71	-911	-412.92	0	0	0	No, e>l/2
SLV 1	7.71	-1994	-1027.81	0	0	0	No, e>l/2
SLV 1	9.71	-9135	1490.56	38325	2490.83	1.671	Si
SLV 15	7.71	-8416	1391.35	35309	2377.34	1.709	Si
SLV 15	9.71	965	-1181.09	0	0	0	No, Trazione
SLV 11	7.71	-3702	468.69	15532	1283.82	2.739	Si
SLV 11	9.71	-911	-412.92	0	0	0	No, e>l/2
SLV 2	7.71	-1994	-1027.81	0	0	0	No, e>l/2
SLV 2	9.71	-9135	1490.56	38325	2490.83	1.671	Si
SLV 3	7.71	-368	-1077.89	0	0	0	No, e>l/2
SLV 3	9.71	-8041	1380.51	33735	2312.52	1.675	Si

Verifica a taglio nel piano secondo D.M. 17-01-18 (N.T.C.) §7.8.2.2.2 con rottura per scorrimento in combinazioni non sismiche, γM = 3

Comb.	Quota	N	V par	M	σ0	σN	l'	fvd	Vt scorr.	Vt fess.diag.	Vt,lim	c.s.	Verifica
SLU 37	7.71	-6236	328	226.52		26162	0.7945	9044	2156			6.56	Si
SLU 37	9.71	-4975	24	176.14		20871	0.7945	8338	1988			82.75	Si
SLU 84	7.71	-7583	366	264.52		31814	0.7945	9797	2335			6.38	Si
SLU 84	9.71	-6064	-16	227.73		25440	0.7945	8948	2133			129.52	Si
SLU 74	7.71	-7409	352	261.28		31083	0.7945	9700	2312			6.57	Si
SLU 74	9.71	-5851	-1	214.94		24547	0.7945	8828	2104			1000	Si
SLU 36	7.71	-6248	328	225.18		26213	0.7945	9051	2157			6.58	Si
SLU 36	9.71	-5048	-2	183.34		21180	0.7945	8380	1997			1000	Si
SLU 80	7.71	-7538	369	270.69		31626	0.7945	9772	2329			6.3	Si
SLU 80	9.71	-6076	-35	225.73		25489	0.7945	8954	2134			60.87	Si
SLU 79	7.71	-7552	371	272.45		31683	0.7945	9780	2331			6.28	Si
SLU 79	9.71	-6016	-7	218.54		25240	0.7945	8921	2126			321.31	Si
SLU 83	7.71	-7597	367	266.28		31871	0.7945	9805	2337			6.36	Si

Comb.	Quota	N	V par	M	σ0	σN	l'	fvd	Vt scorr.	Vt fess.diag.	Vt,lim	c.s.	Verifica
SLU 83	9.71	-6004	12	220.54		25191	0.7945	8914	2125			177.36	Si
SLU 78	7.71	-7564	370	271.11		31734	0.7945	9787	2333			6.3	Si
SLU 78	9.71	-6090	-32	225.75		25548	0.7945	8962	2136			66.44	Si
SLU 35	7.71	-6262	329	226.94		26270	0.7945	9058	2159			6.56	Si
SLU 35	9.71	-4989	27	176.15		20931	0.7945	8346	1989			73.87	Si
SLU 77	7.71	-7578	372	272.87		31791	0.7945	9794	2335			6.28	Si
SLU 77	9.71	-6030	-4	218.56		25299	0.7945	8929	2128			574.19	Si

Verifica a taglio nel piano secondo D.M. 17-01-18 (N.T.C.) §7.8.2.2.2 con rottura per scorrimento in combinazioni sismiche, γM = 2

Comb.	Quota	N	V par	M	σ0	σN	l'	fvd	Vt scorr.	Vt fess.diag.	Vt,lim	c.s.	Verifica
SLV 15	7.71	-8416	5095	1391.35		40316	0.6959	16250	3392			0.67	No, Vu<V
SLV 15	9.71	965	3472	-1181.09		0	0	8333	0			0	No, Vu<V
SLV 11	7.71	-3702	1115	468.69		15532	0.7945	11440	2727			2.45	Si
SLV 11	9.71	-911	303	-412.92		0	0	8333	0			0	No, Vu<V
SLV 13	7.71	-10042	5471	1441.43		43976	0.7612	16250	3711			0.68	No, Vu<V
SLV 13	9.71	-130	3947	-1071.03		0	0	8333	0			0	No, Vu<V
SLV 4	7.71	-368	-5021	-1077.89		0	0	8333	0			0	No, Vu<V
SLV 4	9.71	-8041	-4002	1380.51		39606	0.6768	16250	3299			0.82	No, Vu<V
SLV 14	7.71	-10042	5471	1441.43		43976	0.7612	16250	3711			0.68	No, Vu<V
SLV 14	9.71	-130	3947	-1071.03		0	0	8333	0			0	No, Vu<V
SLV 16	7.71	-8416	5095	1391.35		40316	0.6959	16250	3392			0.67	No, Vu<V
SLV 16	9.71	965	3472	-1181.09		0	0	8333	0			0	No, Vu<V
SLV 3	7.71	-368	-5021	-1077.89		0	0	8333	0			0	No, Vu<V
SLV 3	9.71	-8041	-4002	1380.51		39606	0.6768	16250	3299			0.82	No, Vu<V
SLV 2	7.71	-1994	-4644	-1027.81		0	0	8333	0			0	No, Vu<V
SLV 2	9.71	-9135	-3527	1490.56		43358	0.7023	16250	3424			0.97	No, Vu<V
SLV 1	7.71	-1994	-4644	-1027.81		0	0	8333	0			0	No, Vu<V
SLV 1	9.71	-9135	-3527	1490.56		43358	0.7023	16250	3424			0.97	No, Vu<V
SLV 12	7.71	-3702	1115	468.69		15532	0.7945	11440	2727			2.45	Si
SLV 12	9.71	-911	303	-412.92		0	0	8333	0			0	No, Vu<V

Verifica a pressoflessione fuori piano D.M. 17-01-18 (N.T.C.)

quota 8.5 Wa 0.05 denominatore 8 γM = 2

Comb.	fd	Sa	σ0	N	M	Mc	Coeff.s.	Verifica
SLV 7	143750	0.42	9989	-2381	93.24	327.97	3.52	Si
SLV 8	143750	0.42	9989	-2381	93.24	327.97	3.52	Si
SLV 11	143750	0.42	12646	-3014	93.24	405.36	4.35	Si
SLV 12	143750	0.42	12646	-3014	93.24	405.36	4.35	Si
SLV 4	143750	0.42	13466	-3210	93.24	428.41	4.59	Si
SLV 3	143750	0.42	13466	-3210	93.24	428.41	4.59	Si
SLV 1	143750	0.42	19103	-4554	93.24	576.24	6.18	Si
SLV 2	143750	0.42	19103	-4554	93.24	576.24	6.18	Si
SLV 15	143750	0.42	22323	-5321	93.24	652.32	7	Si
SLV 16	143750	0.42	22323	-5321	93.24	652.32	7	Si

Verifica dei meccanismi locali di collasso con analisi cinematica lineare

forza di aggancio al piano = 0 quota mezzeria = 8.5 Wa = 0.05 Ta = 0.0674

Comb.	N top	N base	V orto	α0	M*	e*	a0*	aLim	Verifica
SLV 12	-1213	-1499	42	0.038	246.8	0.895	0.61607	7.84858	No
SLV 11	-1213	-1499	42	0.038	246.8	0.895	0.61607	7.84858	No
SLV 1	-5928	-6866	-15	0.046	720.7	0.953	0.6973	8.79685	No
SLV 2	-5928	-6866	-15	0.046	720.7	0.953	0.6973	8.79685	No
SLV 6	-5126	-7540	-42	0.041	639.2	0.947	0.63433	7.84858	No
SLV 5	-5126	-7540	-42	0.041	639.2	0.947	0.63433	7.84858	No
SLV 10	-3694	-6590	-41	0.041	494.2	0.935	0.63886	7.84858	No
SLV 9	-3694	-6590	-41	0.041	494.2	0.935	0.63886	7.84858	No
SLV 8	-2645	-2449	41	0.04	388.5	0.921	0.63909	7.84858	No
SLV 7	-2645	-2449	41	0.04	388.5	0.921	0.63909	7.84858	No

Tabella dei coefficienti di sicurezza minimi

Stato limite	Coeff.s.	Comb.	Verifica
PF_SLU	6.727	SLU 77	Si
V_SLU	6.277	SLU 77	Si
PF_SLV	0	SLV 16	No
V_SLV	0	SLV 1	No
PFFP_SLV	3.517	SLV 7	Si
R_SLV	0.078	SLV 11	No

Maschio 269

Verifiche condotte secondo D.M. 17-01-18 (N.T.C.)

Dati geometrici

X ini.	Y ini.	X fin.	Y fin.	Quota i.	Quota.s	l	Sp.	h netta	h ini.	h fin.	a	a.s.,sx	a.s.,dx
-11.933	-4.696	-11.003	-4.697	Z medio 676 cm	Z medio 1024 cm	0.93	0.3	3.48	3.48	3.48			

Caratteristiche del materiale

(Circolare 7 21-01-19 C8.5.I) Muratura in mattoni pieni e malta di calce LC2_Corti

fb	fk	fvk0	fmedio	τ0	fv0	μ	ϕ	fv,lim	E	G	FC
600000			345000	9000	20000	0.58	0.77	32500	320000000	128000000	1.2

Verifica a pressoflessione nel piano secondo D.M. 17-01-18 NTC §7.8.2.2.1 in combinazioni non sismiche, γM = 3

Comb.	Quota	N	M	σ0	Mu	c.s.	Verifica
SLU 79	7.71	-7922	-235.94	28392	2400.14	10.173	Si

Comb.	Quota	N	M	σ0	Mu	c.s.	Verifica
SLU 79	9.71	-6992	-419.54	25058	2251.4	5.366	Si
SLU 84	7.71	-7980	-240.47	28598	2408.21	10.014	Si
SLU 84	9.71	-6979	-416.21	25012	2249.1	5.404	Si
SLU 77	7.71	-7950	-237.23	28491	2404.04	10.134	Si
SLU 77	9.71	-7005	-419.01	25103	2253.64	5.378	Si
SLU 75	7.71	-7803	-240.76	27964	2383.05	9.898	Si
SLU 75	9.71	-6793	-400.01	24343	2214.89	5.537	Si
SLU 76	7.71	-7772	-242.27	27853	2378.5	9.817	Si
SLU 76	9.71	-6802	-401.48	24378	2216.73	5.521	Si
SLU 82	7.71	-7838	-239.78	28089	2388.1	9.96	Si
SLU 82	9.71	-6734	-395.8	24132	2203.78	5.568	Si
SLU 80	7.71	-7917	-240.16	28374	2399.45	9.991	Si
SLU 80	9.71	-7026	-420.95	25178	2257.39	5.363	Si
SLU 83	7.71	-7985	-236.26	28616	2408.89	10.196	Si
SLU 83	9.71	-6946	-414.8	24892	2243.05	5.407	Si
SLU 78	7.71	-7945	-241.45	28474	2403.35	9.954	Si
SLU 78	9.71	-7038	-420.43	25223	2259.62	5.375	Si
SLU 74	7.71	-7808	-236.54	27982	2383.76	10.078	Si
SLU 74	9.71	-6759	-398.6	24223	2208.58	5.541	Si

Verifica a pressoflessione nel piano secondo D.M. 17-01-18 NTC §7.8.2.2.1 in combinazioni sismiche, γM = 2

Comb.	Quota	N	M	σ0	Mu	c.s.	Verifica
SLV 16	7.71	-665	1418.19	0	0	0	No, e>l/2
SLV 16	9.71	-8826	-1831.71	31630	3041.99	1.661	Si
SLV 11	7.71	-974	474.81	0	0	0	No, e>l/2
SLV 11	9.71	-4459	-646.67	15979	1802.41	2.787	Si
SLV 4	7.71	-8379	-1659.62	30029	2939.06	1.771	Si
SLV 4	9.71	431	1357.22	0	0	0	No, Trazione
SLV 12	7.71	-974	474.81	0	0	0	No, e>l/2
SLV 12	9.71	-4459	-646.67	15979	1802.41	2.787	Si
SLV 15	7.71	-665	1418.19	0	0	0	No, e>l/2
SLV 15	9.71	-8826	-1831.71	31630	3041.99	1.661	Si
SLV 3	7.71	-8379	-1659.62	30029	2939.06	1.771	Si
SLV 3	9.71	431	1357.22	0	0	0	No, Trazione
SLV 13	7.71	-2715	1303.45	0	0	0	No, e>l/2
SLV 13	9.71	-9792	-1890.78	35092	3245.93	1.717	Si
SLV 1	7.71	-10428	-1774.35	37373	3366.38	1.897	Si
SLV 1	9.71	-535	1298.15	0	0	0	No, e>l/2
SLV 2	7.71	-10428	-1774.35	37373	3366.38	1.897	Si
SLV 2	9.71	-535	1298.15	0	0	0	No, e>l/2
SLV 14	7.71	-2715	1303.45	0	0	0	No, e>l/2
SLV 14	9.71	-9792	-1890.78	35092	3245.93	1.717	Si

Verifica a taglio nel piano secondo D.M. 17-01-18 (N.T.C.) §7.8.2.2.2 con rottura per scorrimento in combinazioni non sismiche, γM = 3

Comb.	Quota	N	V par	M	σ0	σN	I'	fvd	Vt scorr.	Vt fess.diag.	Vt,lim	c.s.	Verifica
SLU 59	7.71	-7474	51	-234.71		26787	0.9301	9127	2547			50.14	Si
SLU 59	9.71	-6592	296	-389.79		23623	0.9301	8705	2429			8.2	Si
SLU 71	7.71	-7444	55	-233.58		26679	0.9301	9113	2543			46.1	Si
SLU 71	9.71	-6527	289	-382.95		23392	0.9301	8674	2420			8.36	Si
SLU 72	7.71	-7439	49	-237.79		26661	0.9301	9110	2542			51.6	Si
SLU 72	9.71	-6561	294	-384.36		23512	0.9301	8691	2425			8.24	Si
SLU 58	7.71	-7479	57	-230.49		26805	0.9301	9130	2547			44.94	Si
SLU 58	9.71	-6558	291	-388.38		23503	0.9301	8689	2425			8.32	Si
SLU 51	7.71	-6997	41	-232.35		25075	0.9301	8899	2483			60.03	Si
SLU 51	9.71	-6127	293	-353.2		21957	0.9301	8483	2367			8.09	Si
SLU 50	7.71	-7002	47	-228.13		25092	0.9301	8901	2484			52.56	Si
SLU 50	9.71	-6093	288	-351.79		21837	0.9301	8467	2363			8.21	Si
SLU 49	7.71	-7024	37	-233.64		25174	0.9301	8912	2487			67.02	Si
SLU 49	9.71	-6139	287	-352.68		22002	0.9301	8489	2369			8.24	Si
SLU 57	7.71	-7502	47	-236		26887	0.9301	9140	2550			54.8	Si
SLU 57	9.71	-6604	291	-389.27		23668	0.9301	8711	2431			8.35	Si
SLU 80	7.71	-7917	59	-240.16		28374	0.9301	9339	2606			44.39	Si
SLU 80	9.71	-7026	298	-420.95		25178	0.9301	8913	2487			8.35	Si
SLU 48	7.71	-7029	43	-229.42		25192	0.9301	8914	2487			57.86	Si
SLU 48	9.71	-6106	283	-351.27		21882	0.9301	8473	2364			8.37	Si

Verifica a taglio nel piano secondo D.M. 17-01-18 (N.T.C.) §7.8.2.2.2 con rottura per scorrimento in combinazioni sismiche, γM = 2

Comb.	Quota	N	V par	M	σ0	σN	I'	fvd	Vt scorr.	Vt fess.diag.	Vt,lim	c.s.	Verifica
SLV 12	7.71	-974	2475	474.81		0	0	8333	0			0	No, Vu<V
SLV 12	9.71	-4459	1456	-646.67		15979	0.9301	11529	3217			2.21	Si
SLV 1	7.71	-10428	-5694	-1774.35		39290	0.8847	16191	4297			0.75	No, Vu<V
SLV 1	9.71	-535	-4048	1298.15		0	0	8333	0			0	No, Vu<V
SLV 13	7.71	-2715	5175	1303.45		0	0	8333	0			0	No, Vu<V
SLV 13	9.71	-9792	4314	-1890.78		40006	0.8159	16250	3977			0.92	No, Vu<V
SLV 14	7.71	-2715	5175	1303.45		0	0	8333	0			0	No, Vu<V
SLV 14	9.71	-9792	4314	-1890.78		40006	0.8159	16250	3977			0.92	No, Vu<V
SLV 3	7.71	-8379	-5184	-1659.62		34871	0.801	15307	3678			0.71	No, Vu<V
SLV 3	9.71	431	-4016	1357.22		0	0	8333	0			0	No, Vu<V
SLV 2	7.71	-10428	-5694	-1774.35		39290	0.8847	16191	4297			0.75	No, Vu<V
SLV 2	9.71	-535	-4048	1298.15		0	0	8333	0			0	No, Vu<V
SLV 4	7.71	-8379	-5184	-1659.62		34871	0.801	15307	3678			0.71	No, Vu<V
SLV 4	9.71	431	-4016	1357.22		0	0	8333	0			0	No, Vu<V
SLV 11	7.71	-974	2475	474.81		0	0	8333	0			0	No, Vu<V
SLV 11	9.71	-4459	1456	-646.67		15979	0.9301	11529	3217			2.21	Si
SLV 16	7.71	-665	5684	1418.19		0	0	8333	0			0	No, Vu<V
SLV 16	9.71	-8826	4346	-1831.71		38081	0.7725	15950	3697			0.85	No, Vu<V
SLV 15	7.71	-665	5684	1418.19		0	0	8333	0			0	No, Vu<V
SLV 15	9.71	-8826	4346	-1831.71		38081	0.7725	15950	3697			0.85	No, Vu<V

Verifica a pressoflessione fuori piano D.M. 17-01-18 (N.T.C.)

quota 8.5 Wa 0.05 denominatore 8 γM = 2

Comb.	fd	Sa	σ0	N	M	Mc	Coeff.s.	Verifica
SLV 11	143750	0.42	8690	-2425	109.15	337.87	3.1	Si
SLV 12	143750	0.42	8690	-2425	109.15	337.87	3.1	Si
SLV 8	143750	0.42	10779	-3008	109.15	411.35	3.77	Si
SLV 7	143750	0.42	10779	-3008	109.15	411.35	3.77	Si
SLV 15	143750	0.42	12930	-3608	109.15	483.91	4.43	Si
SLV 16	143750	0.42	12930	-3608	109.15	483.91	4.43	Si
SLV 13	143750	0.42	18652	-5205	109.15	661.52	6.06	Si
SLV 14	143750	0.42	18652	-5205	109.15	661.52	6.06	Si
SLV 4	143750	0.42	19892	-5550	109.15	697.03	6.39	Si
SLV 3	143750	0.42	19892	-5550	109.15	697.03	6.39	Si

Verifica dei meccanismi locali di collasso con analisi cinematica lineare

forza di aggancio al piano = 0 quota mezzeria = 8.5 Wa = 0.05 Ta = 0.0674

Comb.	N top	N base	V orto	α0	M*	e*	a0*	aLim	Verifica
SLV 8	-1644	-1621	51	0.038	310.6	0.898	0.61119	7.84858	No
SLV 7	-1644	-1621	51	0.038	310.6	0.898	0.61119	7.84858	No
SLV 12	-3186	-2597	51	0.04	463.8	0.922	0.62592	7.84858	No
SLV 11	-3186	-2597	51	0.04	463.8	0.922	0.62592	7.84858	No
SLV 6	-4127	-7477	-51	0.04	558.6	0.933	0.62981	7.84858	No
SLV 5	-4127	-7477	-51	0.04	558.6	0.933	0.62981	7.84858	No
SLV 13	-6598	-7542	-15	0.046	809	0.951	0.70601	8.79685	No
SLV 14	-6598	-7542	-15	0.046	809	0.951	0.70601	8.79685	No
SLV 10	-5669	-8453	-51	0.041	714.6	0.945	0.63197	7.84858	No
SLV 9	-5669	-8453	-51	0.041	714.6	0.945	0.63197	7.84858	No

Tabella dei coefficienti di sicurezza minimi

Stato limite	Coeff.s.	Comb.	Verifica
PF_SLU	5.363	SLU 80	Si
V_SLU	8.085	SLU 51	Si
PF_SLV	0	SLV 4	No
V_SLV	0	SLV 1	No
PFFP_SLV	3.095	SLV 11	Si
R_SLV	0.078	SLV 7	No

Maschio 270

Verifiche condotte secondo D.M. 17-01-18 (N.T.C.)

Dati geometrici

X ini.	Y ini.	X fin.	Y fin.	Quota i.	Quota.s	l	Sp.	h netta	h ini.	h fin.	a	a.s.,sx	a.s.,dx
-11.01	-4.715	-13.757	-4.715	L1	L2	2.747	0.45	2.25	2.25	2.25			

Caratteristiche del materiale

(Circolare 7 21-01-19 C8.5.I) Muratura in mattoni pieni e malta di calce LC2_Corti

fb	fk	fvk0	fmedio	τ0	fv0	μ	ϕ	fv,lim	E	G	FC
600000			345000	9000	20000	0.58	0.77	32500	320000000	128000000	1.2

Verifica a pressoflessione nel piano secondo D.M. 17-01-18 NTC §7.8.2.2.1 in combinazioni non sismiche, γM = 3

Comb.	Quota	N	M	σ0	Mu	c.s.	Verifica
SLU 48	-1.67	-36315	-428.44	29378	31889.6	74.433	Si
SLU 48	0.58	-23800	464.64	19254	24962.65	53.724	Si
SLU 51	-1.67	-35349	-415.83	28597	31507.11	75.769	Si
SLU 51	0.58	-23176	466.73	18749	24505.13	52.504	Si
SLU 9	-1.67	-27718	-325.04	22423	27590.47	84.882	Si
SLU 9	0.58	-18267	381.24	14778	20538.24	53.872	Si
SLU 8	-1.67	-28564	-334.68	23108	28103.23	83.971	Si
SLU 8	0.58	-18812	380.17	15218	21010.5	55.267	Si
SLU 72	-1.67	-37695	-441.62	30494	32391.67	73.348	Si
SLU 72	0.58	-25021	476.13	20241	25826.43	54.242	Si
SLU 49	-1.67	-35469	-418.8	28693	31555.82	75.348	Si
SLU 49	0.58	-23256	465.72	18814	24564.46	52.745	Si
SLU 7	-1.67	-27838	-328.01	22520	27664.07	84.339	Si
SLU 7	0.58	-18348	380.24	14843	20608.31	54.199	Si
SLU 70	-1.67	-37814	-444.59	30591	32432.73	72.95	Si
SLU 70	0.58	-25101	475.13	20306	25881.73	54.473	Si
SLU 71	-1.67	-38541	-451.25	31179	32674.05	72.407	Si
SLU 71	0.58	-25565	475.06	20682	26198.42	55.148	Si
SLU 50	-1.67	-36196	-425.47	29282	31843.64	74.844	Si
SLU 50	0.58	-23720	465.65	19189	24904.51	53.483	Si

Verifica a pressoflessione nel piano secondo D.M. 17-01-18 NTC §7.8.2.2.1 in combinazioni sismiche, γM = 2

Comb.	Quota	N	M	σ0	Mu	c.s.	Verifica
SLV 12	-1.67	-7028	-546.87	5686	9204.19	16.831	Si
SLV 12	0.58	-3750	2605.82	3033	5022.25	1.927	Si
SLV 3	-1.67	-22332	850.75	18066	26137.69	30.723	Si
SLV 3	0.58	-14538	-7794.6	11761	18045.53	2.315	Si
SLV 8	-1.67	-6688	149.12	5411	8779.44	58.876	Si
SLV 8	0.58	-3487	-2209.09	2821	4678.83	2.118	Si
SLV 11	-1.67	-7028	-546.87	5686	9204.19	16.831	Si
SLV 11	0.58	-3750	2605.82	3033	5022.25	1.927	Si
SLV 7	-1.67	-6688	149.12	5411	8779.44	58.876	Si
SLV 7	0.58	-3487	-2209.09	2821	4678.83	2.118	Si
SLV 15	-1.67	-23466	-1469.23	18983	27222.74	18.529	Si

Comb.	Quota	N	M	σ0	Mu	c.s.	Verifica
SLV 15	0.58	-15413	8255.09	12469	19009.44	2.303	Si
SLV 14	-1.67	-37215	-1563.83	30106	38520.15	24.632	Si
SLV 14	0.58	-25148	8282.42	20344	28789.3	3.476	Si
SLV 4	-1.67	-22332	850.75	18066	26137.69	30.723	Si
SLV 4	0.58	-14538	-7794.6	11761	18045.53	2.315	Si
SLV 13	-1.67	-37215	-1563.83	30106	38520.15	24.632	Si
SLV 13	0.58	-25148	8282.42	20344	28789.3	3.476	Si
SLV 16	-1.67	-23466	-1469.23	18983	27222.74	18.529	Si
SLV 16	0.58	-15413	8255.09	12469	19009.44	2.303	Si

Verifica a taglio nel piano secondo D.M. 17-01-18 (N.T.C.) §7.8.2.2.2 con rottura per scorrimento in combinazioni non sismiche, γM = 3

Comb.	Quota	N	V par	M	σ0	σN	l'	fvd	Vt scorr.	Vt fess.diag.	Vt,lim	c.s.	Verifica
SLU 82	-1.67	-42174	200	-524.42		34118	2.747	10105	12491			62.5	Si
SLU 82	0.58	-28907	40	119.3		23385	2.747	8674	10722			269.75	Si
SLU 63	-1.67	-40052	182	-499.92		32401	2.747	9876	12208			67.05	Si
SLU 63	0.58	-27233	36	152.13		22031	2.747	8493	10498			291.51	Si
SLU 84	-1.67	-42397	182	-525.71		34298	2.747	10129	12520			68.91	Si
SLU 84	0.58	-29078	25	161.53		23523	2.747	8692	10744			432.35	Si
SLU 19	-1.67	-32197	164	-407.84		26047	2.747	9028	11160			68.22	Si
SLU 19	0.58	-22153	31	24.41		17922	2.747	7945	9821			317.05	Si
SLU 73	-1.67	-40132	192	-492.38		32466	2.747	9884	12218			63.75	Si
SLU 73	0.58	-27276	40	201.72		22066	2.747	8498	10504			261.48	Si
SLU 61	-1.67	-39829	200	-498.63		32221	2.747	9852	12178			60.83	Si
SLU 61	0.58	-27062	51	109.89		21892	2.747	8475	10476			205.77	Si
SLU 60	-1.67	-40675	196	-508.26		32905	2.747	9943	12291			62.82	Si
SLU 60	0.58	-27606	58	108.82		22333	2.747	8533	10548			183.4	Si
SLU 55	-1.67	-38010	174	-467.88		30749	2.747	9655	11935			68.65	Si
SLU 55	0.58	-25602	36	234.55		20711	2.747	8317	10281			282.14	Si
SLU 52	-1.67	-37787	192	-466.59		30569	2.747	9631	11906			62	Si
SLU 52	0.58	-25431	51	192.32		20573	2.747	8299	10258			199.83	Si
SLU 81	-1.67	-43021	195	-534.05		34803	2.747	10196	12604			64.54	Si
SLU 81	0.58	-29451	46	118.22		23825	2.747	8732	10794			232.88	Si

Verifica a taglio nel piano secondo D.M. 17-01-18 (N.T.C.) §7.8.2.2.2 con rottura per scorrimento in combinazioni sismiche, γM = 2

Comb.	Quota	N	V par	M	σ0	σN	l'	fvd	Vt scorr.	Vt fess.diag.	Vt,lim	c.s.	Verifica
SLV 11	-1.67	-7028	-1753	-546.87		5686	2.747	9470	11707			6.68	Si
SLV 11	0.58	-3750	-1193	2605.82		4093	2.0356	9152	8383			7.03	Si
SLV 15	-1.67	-23466	-5625	-1469.23		18983	2.747	12130	14994			2.67	Si
SLV 15	0.58	-15413	-3764	8255.09		13626	2.5137	11059	12509			3.32	Si
SLV 16	-1.67	-23466	-5625	-1469.23		18983	2.747	12130	14994			2.67	Si
SLV 16	0.58	-15413	-3764	8255.09		13626	2.5137	11059	12509			3.32	Si
SLV 1	-1.67	-36081	5883	756.15		29189	2.747	14171	17517			2.98	Si
SLV 1	0.58	-24273	3859	-7767.27		19636	2.747	12261	15156			3.93	Si
SLV 12	-1.67	-7028	-1753	-546.87		5686	2.747	9470	11707			6.68	Si
SLV 12	0.58	-3750	-1193	2605.82		4093	2.0356	9152	8383			7.03	Si
SLV 2	-1.67	-36081	5883	756.15		29189	2.747	14171	17517			2.98	Si
SLV 2	0.58	-24273	3859	-7767.27		19636	2.747	12261	15156			3.93	Si
SLV 3	-1.67	-22332	5780	850.75		18066	2.747	11947	14768			2.55	Si
SLV 3	0.58	-14538	3795	-7794.6		12861	2.512	10906	12327			3.25	Si
SLV 14	-1.67	-37215	-5522	-1563.83		30106	2.747	14355	17744			3.21	Si
SLV 14	0.58	-25148	-3700	8282.42		20344	2.747	12402	15331			4.14	Si
SLV 13	-1.67	-37215	-5522	-1563.83		30106	2.747	14355	17744			3.21	Si
SLV 13	0.58	-25148	-3700	8282.42		20344	2.747	12402	15331			4.14	Si
SLV 4	-1.67	-22332	5780	850.75		18066	2.747	11947	14768			2.55	Si
SLV 4	0.58	-14538	3795	-7794.6		12861	2.512	10906	12327			3.25	Si

Verifica a pressoflessione fuori piano D.M. 17-01-18 (N.T.C.)

quota -0.545 Wa 0.08 denominatore 8 γM = 2

Comb.	fd	Sa	σ0	N	M	Mc	Coeff.s.	Verifica
SLV 7	143750	0.24	4283	-5295	114.67	1149.55	10.03	Si
SLV 8	143750	0.24	4283	-5295	114.67	1149.55	10.03	Si
SLV 11	143750	0.24	4486	-5546	114.67	1201.93	10.48	Si
SLV 12	143750	0.24	4486	-5546	114.67	1201.93	10.48	Si
SLV 3	143750	0.24	15305	-18919	114.67	3723.62	32.47	Si
SLV 4	143750	0.24	15305	-18919	114.67	3723.62	32.47	Si
SLV 16	143750	0.24	15982	-19755	114.67	3863.56	33.69	Si
SLV 15	143750	0.24	15982	-19755	114.67	3863.56	33.69	Si
SLV 1	143750	0.24	24955	-30848	114.67	5523.25	48.17	Si
SLV 2	143750	0.24	24955	-30848	114.67	5523.25	48.17	Si

Verifica dei meccanismi locali di collasso con analisi cinematica lineare

forza di aggancio al piano = 0 quota mezzeria = -0.545 Wa = 0.08 Ta = 0.0188

Comb.	N top	N base	V orto	α0	M*	e*	a0*	aLim	Verifica
SLV 7	-3487	-6688	-1678	0	771.9	0.892	0	2.84379	No
SLV 11	-3750	-7028	-1656	0	796.9	0.893	0	2.84379	No
SLV 8	-3487	-6688	-1678	0	771.9	0.892	0	2.84379	No
SLV 12	-3750	-7028	-1656	0	796.9	0.893	0	2.84379	No
SLV 9	-36199	-52859	2144	0.051	4077	0.971	0.76447	2.84379	No
SLV 10	-36199	-52859	2144	0.051	4077	0.971	0.76447	2.84379	No
SLV 5	-35936	-52519	2122	0.051	4050.3	0.97	0.76819	2.84379	No
SLV 6	-35936	-52519	2122	0.051	4050.3	0.97	0.76819	2.84379	No
SLV 13	-25148	-37215	840	0.079	2952.3	0.96	1.1905	2.92319	No
SLV 14	-25148	-37215	840	0.079	2952.3	0.96	1.1905	2.92319	No

Tabella dei coefficienti di sicurezza minimi

Stato limite	Coeff.s.	Comb.	Verifica
PF_SLU	52.504	SLU 51	Si
V_SLU	60.829	SLU 61	Si
PF_SLV	1.927	SLV 11	Si

Stato limite	Coeff.s.	Comb.	Verifica
V_SLV	2.555	SLV 3	Si
PFFP_SLV	10.025	SLV 7	Si
R_SLV	0	SLV 7	No

Maschio 271

Verifiche condotte secondo D.M. 17-01-18 (N.T.C.)

Dati geometrici

X ini.	Y ini.	X fin.	Y fin.	Quota i.	Quota.s	l	Sp.	h netta	h ini.	h fin.	a	a.s.,sx	a.s.,dx
-12.385	-3.606	-12.385	-3.314	L1	L2	0.291	0.3	2.25	2.25	2.25			

Caratteristiche del materiale

(Circolare 7 21-01-19 C8.5.I) Muratura in mattoni pieni e malta di calce LC2_Corti

fb	fk	fvk0	fmedio	τ0	fv0	μ	ϕ	fv,lim	E	G	FC
600000			345000	9000	20000	0.58	0.77	32500	320000000	128000000	1.2

Verifica a pressoflessione nel piano secondo D.M. 17-01-18 NTC §7.8.2.2.1 in combinazioni non sismiche, γM = 3

Comb.	Quota	N	M	σ0	Mu	c.s.	Verifica
SLU 10	-1.67	-211	-20.94	2417	29.89	1.428	Si
SLU 10	0.58	-137	11.01	1562	19.52	1.773	Si
SLU 39	-1.67	-250	-24.61	2864	35.22	1.431	Si
SLU 39	0.58	-194	15.91	2215	27.46	1.725	Si
SLU 61	-1.67	-285	-29.7	3259	39.87	1.342	Si
SLU 61	0.58	-181	14.59	2066	25.66	1.759	Si
SLU 62	-1.67	-282	-28.91	3227	39.49	1.366	Si
SLU 62	0.58	-181	14.59	2067	25.67	1.76	Si
SLU 21	-1.67	-242	-25.02	2767	34.06	1.361	Si
SLU 21	0.58	-172	14.04	1964	24.43	1.74	Si
SLU 60	-1.67	-286	-30.01	3271	40.02	1.333	Si
SLU 60	0.58	-181	14.59	2066	25.67	1.759	Si
SLU 18	-1.67	-247	-26.43	2824	34.74	1.314	Si
SLU 18	0.58	-172	14.04	1964	24.43	1.74	Si
SLU 20	-1.67	-243	-25.33	2779	34.21	1.35	Si
SLU 20	0.58	-172	14.04	1965	24.44	1.74	Si
SLU 19	-1.67	-246	-26.12	2811	34.59	1.324	Si
SLU 19	0.58	-172	14.04	1964	24.42	1.74	Si
SLU 63	-1.67	-281	-28.6	3214	39.35	1.376	Si
SLU 63	0.58	-181	14.58	2066	25.66	1.76	Si

Verifica a pressoflessione nel piano secondo D.M. 17-01-18 NTC §7.8.2.2.1 in combinazioni sismiche, γM = 2

Comb.	Quota	N	M	σ0	Mu	c.s.	Verifica
SLV 5	-1.67	-640	-135.44	0	0	0	No, e>l/2
SLV 5	0.58	-172	18.82	1970	24.7	1.312	Si
SLV 4	-1.67	28	35.07	0	0	0	No, Trazione
SLV 4	0.58	-51	1.94	581	7.37	3.792	Si
SLV 9	-1.67	-663	-141.42	0	0	0	No, e>l/2
SLV 9	0.58	-176	19.3	2015	25.26	1.308	Si
SLV 7	-1.67	347	116.15	0	0	0	No, Trazione
SLV 7	0.58	7	-6.28	0	0	0	No, Trazione
SLV 10	-1.67	-663	-141.42	0	0	0	No, e>l/2
SLV 10	0.58	-176	19.3	2015	25.26	1.308	Si
SLV 6	-1.67	-640	-135.44	0	0	0	No, e>l/2
SLV 6	0.58	-172	18.82	1970	24.7	1.312	Si
SLV 2	-1.67	-268	-40.41	0	0	0	No, e>l/2
SLV 2	0.58	-105	9.47	1198	15.11	1.595	Si
SLV 3	-1.67	28	35.07	0	0	0	No, Trazione
SLV 3	0.58	-51	1.94	581	7.37	3.792	Si
SLV 8	-1.67	347	116.15	0	0	0	No, Trazione
SLV 8	0.58	7	-6.28	0	0	0	No, Trazione
SLV 1	-1.67	-268	-40.41	0	0	0	No, e>l/2
SLV 1	0.58	-105	9.47	1198	15.11	1.595	Si

Verifica a taglio nel piano secondo D.M. 17-01-18 (N.T.C.) §7.8.2.2.2 con rottura per scorrimento in combinazioni non sismiche, γM = 3

Comb.	Quota	N	V par	M	σ0	σN	l'	fvd	Vt scorr.	Vt fess.diag.	Vt,lim	c.s.	Verifica
SLU 41	-1.67	-247	21	-23.51		5438	0.1511	6281	285			13.58	Si
SLU 41	0.58	-194	-102	15.91		3384	0.1908	6007	344			3.37	Si
SLU 40	-1.67	-249	20	-24.3		5738	0.1449	6321	275			13.77	Si
SLU 40	0.58	-194	-102	15.91		3384	0.1907	6007	344			3.37	Si
SLU 81	-1.67	-290	22	-28.19		6647	0.1452	6442	281			12.92	Si
SLU 81	0.58	-203	-108	16.46		3491	0.1935	6021	349			3.24	Si
SLU 62	-1.67	-282	17	-28.91		7243	0.1299	6521	254			14.97	Si
SLU 62	0.58	-181	-97	14.59		3089	0.195	5967	349			3.61	Si
SLU 82	-1.67	-288	22	-27.88		6527	0.1473	6426	284			12.83	Si
SLU 82	0.58	-203	-108	16.46		3489	0.1935	6021	349			3.25	Si
SLU 84	-1.67	-285	24	-26.78		6121	0.155	6372	296			12.57	Si
SLU 84	0.58	-203	-108	16.45		3489	0.1935	6021	350			3.25	Si
SLU 39	-1.67	-250	20	-24.61		5862	0.1424	6337	271			13.85	Si
SLU 39	0.58	-194	-102	15.91		3385	0.1907	6007	344			3.37	Si
SLU 42	-1.67	-245	21	-23.2		5325	0.1537	6265	289			13.51	Si
SLU 42	0.58	-194	-102	15.91		3383	0.1908	6007	344			3.37	Si
SLU 60	-1.67	-286	16	-30.01		7784	0.1225	6593	242			15.59	Si
SLU 60	0.58	-181	-97	14.59		3089	0.195	5967	349			3.61	Si
SLU 83	-1.67	-286	23	-27.09		6233	0.1528	6387	293			12.64	Si
SLU 83	0.58	-203	-108	16.46		3490	0.1935	6021	350			3.24	Si

Verifica a taglio nel piano secondo D.M. 17-01-18 (N.T.C.) §7.8.2.2.2 con rottura per scorrimento in combinazioni sismiche, γM = 2

Comb.	Quota	N	V par	M	σ0	σN	l'	fvd	Vt scorr.	Vt fess.diag.	Vt,lim	c.s.	Verifica
SLV 1	-1.67	-268	-15	-40.41		0	0	8333	0			0	No, Vu<V
SLV 1	0.58	-105	-63	9.47		2105	0.1658	8754	435			6.89	Si
SLV 6	-1.67	-640	-124	-135.44		0	0	8333	0			0	No, Vu<V
SLV 6	0.58	-172	-113	18.82		5249	0.1094	9383	308			2.73	Si
SLV 7	-1.67	347	163	116.15		0	0	8333	0			0	No, Vu<V
SLV 7	0.58	7	21	-6.28		0	0	8333	0			0	No, Vu<V
SLV 2	-1.67	-268	-15	-40.41		0	0	8333	0			0	No, Vu<V
SLV 2	0.58	-105	-63	9.47		2105	0.1658	8754	435			6.89	Si
SLV 9	-1.67	-663	-131	-141.42		0	0	8333	0			0	No, Vu<V
SLV 9	0.58	-176	-115	19.3		5410	0.1086	9415	307			2.67	Si
SLV 4	-1.67	28	71	35.07		0	0	8333	0			0	No, Vu<V
SLV 4	0.58	-51	-23	1.94		581	0.2915	8450	739			32.18	Si
SLV 3	-1.67	28	71	35.07		0	0	8333	0			0	No, Vu<V
SLV 3	0.58	-51	-23	1.94		581	0.2915	8450	739			32.18	Si
SLV 10	-1.67	-663	-131	-141.42		0	0	8333	0			0	No, Vu<V
SLV 10	0.58	-176	-115	19.3		5410	0.1086	9415	307			2.67	Si
SLV 8	-1.67	347	163	116.15		0	0	8333	0			0	No, Vu<V
SLV 8	0.58	7	21	-6.28		0	0	8333	0			0	No, Vu<V
SLV 5	-1.67	-640	-124	-135.44		0	0	8333	0			0	No, Vu<V
SLV 5	0.58	-172	-113	18.82		5249	0.1094	9383	308			2.73	Si

Verifica a pressoflessione fuori piano D.M. 17-01-18 (N.T.C.)

quota -0.545 Wa 0.05 denominatore 8 γM = 2

Comb.	fd	Sa	σ0	N	M	Mc	Coeff.s.	Verifica
SLV 8	143750	0.24	0	157	8.11	0	0	No, Trazione
SLV 12	143750	0.24	0	133	8.11	0	0	No, Trazione
SLV 7	143750	0.24	0	157	8.11	0	0	No, Trazione
SLV 11	143750	0.24	0	133	8.11	0	0	No, Trazione
SLV 4	143750	0.24	2192	-192	8.11	28.24	3.48	Si
SLV 3	143750	0.24	2192	-192	8.11	28.24	3.48	Si
SLV 15	143750	0.24	3108	-272	8.11	39.74	4.9	Si
SLV 16	143750	0.24	3108	-272	8.11	39.74	4.9	Si
SLV 1	143750	0.24	5887	-515	8.11	73.5	9.06	Si
SLV 2	143750	0.24	5887	-515	8.11	73.5	9.06	Si

Verifica dei meccanismi locali di collasso con analisi cinematica lineare

forza di aggancio al piano = 0 quota mezzeria = -0.545 Wa = 0.05 Ta = 0.0282

Comb.	N top	N base	V orto	α0	M*	e*	a0*	aLim	Verifica
SLV 4	-51	28	13	0	0	0	0	3.30283	No, Trazione
SLV 7	7	347	4	0	0	0	0	3.16429	No, Trazione
SLV 12	3	324	-5	0	0	0	0	3.16429	No, Trazione
SLV 11	3	324	-5	0	0	0	0	3.16429	No, Trazione
SLV 3	-51	28	13	0	0	0	0	3.30283	No, Trazione
SLV 8	7	347	4	0	0	0	0	3.16429	No, Trazione
SLV 16	-64	-48	-16	0.05	38.8	0.911	0.8041	3.30283	No
SLV 15	-64	-48	-16	0.05	38.8	0.911	0.8041	3.30283	No
SLV 13	-118	-344	-16	0.051	43	0.893	0.83212	3.30283	No
SLV 14	-118	-344	-16	0.051	43	0.893	0.83212	3.30283	No

Tabella dei coefficienti di sicurezza minimi

Stato limite	Coeff.s.	Comb.	Verifica
PF_SLU	1.314	SLU 18	Si
V_SLU	3.244	SLU 81	Si
PF_SLV	0	SLV 12	No
V_SLV	0	SLV 1	No
PFFP_SLV	0	SLV 12	No
R_SLV	0	SLV 12	No

Maschio 274

Verifiche condotte secondo D.M. 17-01-18 (N.T.C.)

Dati geometrici

X ini.	Y ini.	X fin.	Y fin.	Quota i.	Quota.s	l	Sp.	h netta	h ini.	h fin.	a	a.s.,sx	a.s.,dx
-13.727	-4.696	-12.933	-4.696	Z medio 1024 cm	F1	0.795	0.3	4.277	4.277	4.277			

Caratteristiche del materiale

(Circolare 7 21-01-19 C8.5.I) Muratura in mattoni pieni e malta di calce LC2_Corti

fb	fk	fvk0	fmedio	τ0	fv0	μ	ϕ	fv,lim	E	G	FC
600000			345000	9000	20000	0.58	0.77	32500	320000000	128000000	1.2

Verifica a pressoflessione nel piano secondo D.M. 17-01-18 NTC §7.8.2.2.1 in combinazioni non sismiche, γM = 3

Comb.	Quota	N	M	σ0	Mu	c.s.	Verifica
SLU 27	11.19	-3388	145.67	14212	1111.02	7.627	Si
SLU 27	13.19	-1996	30.95	8372	711.32	22.986	Si
SLU 80	11.19	-4251	173.49	17834	1319.04	7.603	Si
SLU 80	13.19	-2423	28.8	10166	842.54	29.252	Si
SLU 79	11.19	-4251	174.76	17836	1319.13	7.548	Si
SLU 79	13.19	-2453	35.38	10292	851.46	24.064	Si
SLU 71	11.19	-4083	172.3	17131	1281.03	7.435	Si
SLU 71	13.19	-2399	43.85	10064	835.24	19.048	Si
SLU 29	11.19	-3380	146.21	14182	1109.12	7.586	Si
SLU 29	13.19	-2006	33.18	8415	714.5	21.536	Si

Comb.	Quota	N	M	σ0	Mu	c.s.	Verifica
SLU 69	11.19	-4091	171.76	17162	1282.72	7.468	Si
SLU 69	13.19	-2389	41.62	10021	832.22	19.997	Si
SLU 50	11.19	-3820	160.08	16024	1218.89	7.614	Si
SLU 50	13.19	-2270	50.7	9524	796.45	15.708	Si
SLU 77	11.19	-4259	174.21	17866	1320.76	7.581	Si
SLU 77	13.19	-2443	33.15	10250	848.47	25.593	Si
SLU 70	11.19	-4090	170.49	17160	1282.63	7.523	Si
SLU 70	13.19	-2359	35.04	9896	823.22	23.496	Si
SLU 72	11.19	-4083	171.03	17129	1280.94	7.489	Si
SLU 72	13.19	-2369	37.27	9938	826.24	22.171	Si

Verifica a pressoflessione nel piano secondo D.M. 17-01-18 NTC §7.8.2.2.1 in combinazioni sismiche, γM = 2

Comb.	Quota	N	M	σ0	Mu	c.s.	Verifica
SLV 2	11.19	-1033	-509.1	0	0	0	No, e>l/2
SLV 2	13.19	-3766	634.7	15799	1302.65	2.052	Si
SLV 15	11.19	-4503	719.35	18892	1512.33	2.102	Si
SLV 15	13.19	747	-587.97	0	0	0	No, Trazione
SLV 1	11.19	-1033	-509.1	0	0	0	No, e>l/2
SLV 1	13.19	-3766	634.7	15799	1302.65	2.052	Si
SLV 3	11.19	-344	-532.32	0	0	0	No, e>l/2
SLV 3	13.19	-2992	526.43	12554	1066.62	2.026	Si
SLV 16	11.19	-4503	719.35	18892	1512.33	2.102	Si
SLV 16	13.19	747	-587.97	0	0	0	No, Trazione
SLV 13	11.19	-5192	742.57	21781	1694.85	2.282	Si
SLV 13	13.19	-27	-479.7	0	0	0	No, e>l/2
SLV 11	11.19	-2244	254.17	9415	822.81	3.237	Si
SLV 11	13.19	341	-324.25	0	0	0	No, Trazione
SLV 4	11.19	-344	-532.32	0	0	0	No, e>l/2
SLV 4	13.19	-2992	526.43	12554	1066.62	2.026	Si
SLV 12	11.19	-2244	254.17	9415	822.81	3.237	Si
SLV 12	13.19	341	-324.25	0	0	0	No, Trazione
SLV 14	11.19	-5192	742.57	21781	1694.85	2.282	Si
SLV 14	13.19	-27	-479.7	0	0	0	No, e>l/2

Verifica a taglio nel piano secondo D.M. 17-01-18 (N.T.C.) §7.8.2.2.2 con rottura per scorrimento in combinazioni non sismiche, γM = 3

Comb.	Quota	N	V par	M	σ0	σN	I'	fvd	Vt scorr.	Vt fess.diag.	Vt,lim	c.s.	Verifica
SLU 78	11.19	-4258	561	172.94		17865	0.7945	7938	1892			3.37	Si
SLU 78	13.19	-2413	87	26.57		10124	0.7945	6905	1646			19	Si
SLU 79	11.19	-4251	530	174.76		17836	0.7945	7934	1891			3.57	Si
SLU 79	13.19	-2453	58	35.38		10292	0.7945	6928	1651			28.52	Si
SLU 80	11.19	-4251	565	173.49		17834	0.7945	7933	1891			3.35	Si
SLU 80	13.19	-2423	74	28.8		10166	0.7945	6911	1647			22.2	Si
SLU 77	11.19	-4259	526	174.21		17866	0.7945	7938	1892			3.59	Si
SLU 77	13.19	-2443	70	33.15		10250	0.7945	6922	1650			23.47	Si
SLU 72	11.19	-4083	525	171.03		17129	0.7945	7839	1869			3.56	Si
SLU 72	13.19	-2369	18	37.27		9938	0.7945	6881	1640			92.68	Si
SLU 38	11.19	-3548	507	147.4		14885	0.7945	7540	1797			3.55	Si
SLU 38	13.19	-2030	83	18.13		8517	0.7945	6691	1595			19.32	Si
SLU 76	11.19	-4015	534	156.11		16843	0.7945	7801	1860			3.48	Si
SLU 76	13.19	-2193	116	18.27		9201	0.7945	6782	1617			13.98	Si
SLU 36	11.19	-3555	503	146.85		14916	0.7945	7544	1798			3.58	Si
SLU 36	13.19	-2020	95	15.9		8475	0.7945	6686	1594			16.78	Si
SLU 84	11.19	-4087	528	158.01		17146	0.7945	7842	1869			3.54	Si
SLU 84	13.19	-2237	129	19.03		9383	0.7945	6807	1622			12.58	Si
SLU 70	11.19	-4090	521	170.49		17160	0.7945	7844	1870			3.59	Si
SLU 70	13.19	-2359	30	35.04		9896	0.7945	6875	1639			54.41	Si

Verifica a taglio nel piano secondo D.M. 17-01-18 (N.T.C.) §7.8.2.2.2 con rottura per scorrimento in combinazioni sismiche, γM = 2

Comb.	Quota	N	V par	M	σ0	σN	I'	fvd	Vt scorr.	Vt fess.diag.	Vt,lim	c.s.	Verifica
SLV 2	11.19	-1033	-2778	-509.1		0	0	8333	0			0	No, Vu<V
SLV 2	13.19	-3766	-1043	634.7		18294	0.6862	11992	2469			2.37	Si
SLV 4	11.19	-344	-2393	-532.32		0	0	8333	0			0	No, Vu<V
SLV 4	13.19	-2992	-1239	526.43		15021	0.664	11338	2259			1.82	Si
SLV 11	11.19	-2244	1797	254.17		9415	0.7945	10216	2435			1.36	Si
SLV 11	13.19	341	87	-324.25		0	0	8333	0			0	No, Vu<V
SLV 3	11.19	-344	-2393	-532.32		0	0	8333	0			0	No, Vu<V
SLV 3	13.19	-2992	-1239	526.43		15021	0.664	11338	2259			1.82	Si
SLV 13	11.19	-5192	2977	742.57		22690	0.7627	12871	2945			0.99	No, Vu<V
SLV 13	13.19	-27	1347	-479.7		0	0	8333	0			0	No, Vu<V
SLV 15	11.19	-4503	3362	719.35		21065	0.7126	12546	2682			0.8	No, Vu<V
SLV 15	13.19	747	1151	-587.97		0	0	8333	0			0	No, Vu<V
SLV 14	11.19	-5192	2977	742.57		22690	0.7627	12871	2945			0.99	No, Vu<V
SLV 14	13.19	-27	1347	-479.7		0	0	8333	0			0	No, Vu<V
SLV 1	11.19	-1033	-2778	-509.1		0	0	8333	0			0	No, Vu<V
SLV 1	13.19	-3766	-1043	634.7		18294	0.6862	11992	2469			2.37	Si
SLV 16	11.19	-4503	3362	719.35		21065	0.7126	12546	2682			0.8	No, Vu<V
SLV 16	13.19	747	1151	-587.97		0	0	8333	0			0	No, Vu<V
SLV 12	11.19	-2244	1797	254.17		9415	0.7945	10216	2435			1.36	Si
SLV 12	13.19	341	87	-324.25		0	0	8333	0			0	No, Vu<V

Verifica a pressoflessione fuori piano D.M. 17-01-18 (N.T.C.)

quota 12.378 Wa 0.05 denominatore 8 γM = 2

Comb.	fd	Sa	σ0	N	M	Mc	Coeff.s.	Verifica
SLV 11	143750	0.5	4785	-1141	167.83	164.39	0.98	No, M>Mu
SLV 12	143750	0.5	4785	-1141	167.83	164.39	0.98	No, M>Mu
SLV 8	143750	0.5	5930	-1413	167.83	201.73	1.2	Si
SLV 7	143750	0.5	5930	-1413	167.83	201.73	1.2	Si
SLV 15	143750	0.5	5987	-1427	167.83	203.56	1.21	Si
SLV 16	143750	0.5	5987	-1427	167.83	203.56	1.21	Si

Comb.	fd	Sa	σ0	N	M	Mc	Coeff.s.	Verifica
SLV 14	143750	0.5	8161	-1945	167.83	272.32	1.62	Si
SLV 13	143750	0.5	8161	-1945	167.83	272.32	1.62	Si
SLV 4	143750	0.5	9803	-2337	167.83	322.38	1.92	Si
SLV 3	143750	0.5	9803	-2337	167.83	322.38	1.92	Si

Verifica dei meccanismi locali di collasso con analisi cinematica lineare

forza di aggancio al piano = 0 quota mezzeria = 12.378 Wa = 0.05 Ta = 0.1018

Comb.	N top	N base	V orto	α0	M*	e*	a0*	aLim	Verifica
SLV 8	555	-1985	-22	0	0	0	0	13.99108	No, Trazione
SLV 15	243	-1599	-31	0	0	0	0	16.26795	No, Trazione
SLV 7	555	-1985	-22	0	0	0	0	13.99108	No, Trazione
SLV 12	748	-1528	-35	0	0	0	0	13.99108	No, Trazione
SLV 11	748	-1528	-35	0	0	0	0	13.99108	No, Trazione
SLV 16	243	-1599	-31	0	0	0	0	16.26795	No, Trazione
SLV 1	-1024	-3636	29	0.037	259.2	0.889	0.59736	16.26795	No
SLV 2	-1024	-3636	29	0.037	259.2	0.889	0.59736	16.26795	No
SLV 5	-1529	-3706	34	0.034	306.9	0.895	0.55995	13.99108	No
SLV 6	-1529	-3706	34	0.034	306.9	0.895	0.55995	13.99108	No

Tabella dei coefficienti di sicurezza minimi

Stato limite	Coeff.s.	Comb.	Verifica
PF_SLU	7.435	SLU 71	Si
V_SLU	3.349	SLU 80	Si
PF_SLV	0	SLV 16	No
V_SLV	0	SLV 1	No
PFFP_SLV	0.979	SLV 11	No
R_SLV	0	SLV 16	No

Maschio 275

Verifiche condotte secondo D.M. 17-01-18 (N.T.C.)

Dati geometrici

X ini.	Y ini.	X fin.	Y fin.	Quota i.	Quota.s	l	Sp.	h netta	h ini.	h fin.	a	a.s.,sx	a.s.,dx
-11.933	-4.696	-11.003	-4.696	Z medio 1024 cm	F1	0.93	0.3	4.275	4.276	4.275			

Caratteristiche del materiale

(Circolare 7 21-01-19 C8.5.I) Muratura in mattoni pieni e malta di calce LC2_Corti

fb	fk	fvk0	fmedio	τ0	fv0	μ	ϕ	fv,lim	E	G	FC
600000			345000	9000	20000	0.58	0.77	32500	320000000	128000000	1.2

Verifica a pressoflessione nel piano secondo D.M. 17-01-18 NTC §7.8.2.2.1 in combinazioni non sismiche, γM = 3

Comb.	Quota	N	M	σ0	Mu	c.s.	Verifica
SLU 58	11.19	-4149	-106.97	14869	1577.11	14.744	Si
SLU 58	13.19	-2912	-188.97	10437	1180.67	6.248	Si
SLU 41	11.19	-3426	-63.92	12279	1353.04	21.169	Si
SLU 41	13.19	-2417	-161.06	8661	1004.34	6.236	Si
SLU 35	11.19	-3616	-77.94	12960	1414.06	18.143	Si
SLU 35	13.19	-2636	-175.73	9449	1083.79	6.167	Si
SLU 16	11.19	-3386	-82.3	12135	1339.94	16.281	Si
SLU 16	13.19	-2446	-162.2	8766	1015	6.258	Si
SLU 77	11.19	-4379	-102.6	15694	1644.03	16.023	Si
SLU 77	13.19	-3103	-202.5	11119	1245.82	6.152	Si
SLU 37	11.19	-3611	-78.93	12943	1412.51	17.895	Si
SLU 37	13.19	-2647	-178.05	9488	1087.72	6.109	Si
SLU 79	11.19	-4374	-103.6	15677	1642.64	15.856	Si
SLU 79	13.19	-3114	-204.83	11159	1249.54	6.101	Si
SLU 71	11.19	-4259	-117.65	15263	1609.31	13.679	Si
SLU 71	13.19	-3006	-193.6	10772	1212.86	6.265	Si
SLU 29	11.19	-3496	-92.98	12528	1375.58	14.794	Si
SLU 29	13.19	-2539	-166.83	9101	1048.99	6.288	Si
SLU 83	11.19	-4189	-88.58	15013	1588.95	17.938	Si
SLU 83	13.19	-2883	-187.83	10332	1170.56	6.232	Si

Verifica a pressoflessione nel piano secondo D.M. 17-01-18 NTC §7.8.2.2.1 in combinazioni sismiche, γM = 2

Comb.	Quota	N	M	σ0	Mu	c.s.	Verifica
SLV 1	11.19	-5218	-845.14	18700	2055.02	2.432	Si
SLV 1	13.19	-264	531.41	0	0	0	No, e>l/2
SLV 14	11.19	-1379	664.82	0	0	0	No, e>l/2
SLV 14	13.19	-4331	-923.24	15521	1758.11	1.904	Si
SLV 3	11.19	-4417	-811.6	15831	1788	2.203	Si
SLV 3	13.19	586	693.04	0	0	0	No, Trazione
SLV 16	11.19	-579	698.36	0	0	0	No, e>l/2
SLV 16	13.19	-3481	-761.61	12475	1453.42	1.908	Si
SLV 8	11.19	-2140	-243.99	7669	932.65	3.823	Si
SLV 8	13.19	154	372.48	0	0	0	No, Trazione
SLV 2	11.19	-5218	-845.14	18700	2055.02	2.432	Si
SLV 2	13.19	-264	531.41	0	0	0	No, e>l/2
SLV 15	11.19	-579	698.36	0	0	0	No, e>l/2
SLV 15	13.19	-3481	-761.61	12475	1453.42	1.908	Si
SLV 13	11.19	-1379	664.82	0	0	0	No, e>l/2
SLV 13	13.19	-4331	-923.24	15521	1758.11	1.904	Si
SLV 7	11.19	-2140	-243.99	7669	932.65	3.823	Si
SLV 7	13.19	154	372.48	0	0	0	No, Trazione
SLV 4	11.19	-4417	-811.6	15831	1788	2.203	Si

Comb.	Quota	N	M	σ0	Mu	c.s.	Verifica
SLV 4	13.19	586	693.04	0	0	0	No, Trazione

Verifica a taglio nel piano secondo D.M. 17-01-18 (N.T.C.) §7.8.2.2.2 con rottura per scorrimento in combinazioni non sismiche, γM = 3

Comb.	Quota	N	V par	M	σ0	σN	I'	fvd	Vt scorr.	Vt fess.diag.	Vt,lim	c.s.	Verifica
SLU 69	11.19	-4263	-204	-116.66		15280	0.9301	7593	2119			10.38	Si
SLU 69	13.19	-2995	294	-191.28		10733	0.9301	6987	1949			6.63	Si
SLU 68	11.19	-4071	-318	-121.65		14592	0.9301	7501	2093			6.58	Si
SLU 68	13.19	-2621	196	-144.89		9394	0.9301	6808	1900			9.68	Si
SLU 58	11.19	-4149	-189	-106.97		14869	0.9301	7538	2103			11.1	Si
SLU 58	13.19	-2912	288	-188.97		10437	0.9301	6947	1938			6.73	Si
SLU 48	11.19	-4038	-196	-120.03		14472	0.9301	7485	2088			10.67	Si
SLU 48	13.19	-2793	292	-175.43		10010	0.9301	6890	1923			6.59	Si
SLU 72	11.19	-4287	-286	-125.44		15365	0.9301	7604	2122			7.42	Si
SLU 72	13.19	-2941	284	-177.46		10541	0.9301	6961	1942			6.84	Si
SLU 47	11.19	-3846	-310	-125.02		13784	0.9301	7393	2063			6.66	Si
SLU 47	13.19	-2420	194	-129.04		8672	0.9301	6712	1873			9.67	Si
SLU 71	11.19	-4259	-209	-117.65		15263	0.9301	7591	2118			10.15	Si
SLU 71	13.19	-3006	309	-193.6		10772	0.9301	6992	1951			6.32	Si
SLU 51	11.19	-4062	-278	-128.81		14557	0.9301	7497	2092			7.54	Si
SLU 51	13.19	-2740	281	-161.6		9819	0.9301	6865	1915			6.81	Si
SLU 79	11.19	-4374	-198	-103.6		15677	0.9301	7646	2133			10.79	Si
SLU 79	13.19	-3114	291	-204.83		11159	0.9301	7043	1965			6.76	Si
SLU 50	11.19	-4033	-200	-121.02		14455	0.9301	7483	2088			10.41	Si
SLU 50	13.19	-2804	306	-177.75		10050	0.9301	6896	1924			6.29	Si

Verifica a taglio nel piano secondo D.M. 17-01-18 (N.T.C.) §7.8.2.2.2 con rottura per scorrimento in combinazioni sismiche, γM = 2

Comb.	Quota	N	V par	M	σ0	σN	I'	fvd	Vt scorr.	Vt fess.diag.	Vt,lim	c.s.	Verifica
SLV 3	11.19	-4417	-3614	-811.6		17448	0.8439	11823	2993			0.83	No, Vu<V
SLV 3	13.19	586	-1129	693.04		0	0	8333	0			0	No, Vu<V
SLV 8	11.19	-2140	-2163	-243.99		7669	0.9301	9867	2753			1.27	Si
SLV 8	13.19	154	58	372.48		0	0	8333	0			0	No, Vu<V
SLV 14	11.19	-1379	3362	664.82		0	0	8333	0			0	No, Vu<V
SLV 14	13.19	-4331	1374	-923.24		19107	0.7555	12155	2755			2.01	Si
SLV 15	11.19	-579	2708	698.36		0	0	8333	0			0	No, Vu<V
SLV 15	13.19	-3481	1578	-761.61		15707	0.7387	11475	2543			1.61	Si
SLV 16	11.19	-579	2708	698.36		0	0	8333	0			0	No, Vu<V
SLV 16	13.19	-3481	1578	-761.61		15707	0.7387	11475	2543			1.61	Si
SLV 13	11.19	-1379	3362	664.82		0	0	8333	0			0	No, Vu<V
SLV 13	13.19	-4331	1374	-923.24		19107	0.7555	12155	2755			2.01	Si
SLV 7	11.19	-2140	-2163	-243.99		7669	0.9301	9867	2753			1.27	Si
SLV 7	13.19	154	58	372.48		0	0	8333	0			0	No, Vu<V
SLV 2	11.19	-5218	-2960	-845.14		19130	0.9092	12159	3316			1.12	Si
SLV 2	13.19	-264	-1334	531.41		0	0	8333	0			0	No, Vu<V
SLV 4	11.19	-4417	-3614	-811.6		17448	0.8439	11823	2993			0.83	No, Vu<V
SLV 4	13.19	586	-1129	693.04		0	0	8333	0			0	No, Vu<V
SLV 1	11.19	-5218	-2960	-845.14		19130	0.9092	12159	3316			1.12	Si
SLV 1	13.19	-264	-1334	531.41		0	0	8333	0			0	No, Vu<V

Verifica a pressoflessione fuori piano D.M. 17-01-18 (N.T.C.)

quota 12.378 Wa 0.05 denominatore 8 γM = 2

Comb.	fd	Sa	σ0	N	M	Mc	Coeff.s.	Verifica
SLV 7	143750	0.5	0	-1175	196.31	0	0	No, e>t/2
SLV 8	143750	0.5	0	-1175	196.31	0	0	No, e>t/2
SLV 4	143750	0.5	5211	-1454	196.31	208.78	1.06	Si
SLV 3	143750	0.5	5211	-1454	196.31	208.78	1.06	Si
SLV 11	143750	0.5	5588	-1559	196.31	223.18	1.14	Si
SLV 12	143750	0.5	5588	-1559	196.31	223.18	1.14	Si
SLV 2	143750	0.5	7441	-2076	196.31	292.47	1.49	Si
SLV 1	143750	0.5	7441	-2076	196.31	292.47	1.49	Si
SLV 16	143750	0.5	9795	-2733	196.31	377.1	1.92	Si
SLV 15	143750	0.5	9795	-2733	196.31	377.1	1.92	Si

Verifica dei meccanismi locali di collasso con analisi cinematica lineare

forza di aggancio al piano = 0 quota mezzeria = 12.378 Wa = 0.05 Ta = 0.1017

Comb.	N top	N base	V orto	α0	M*	e*	a0*	aLim	Verifica
SLV 8	797	-1800	-37	0	0	0	0	13.97828	No, Trazione
SLV 3	182	-1734	-32	0	0	0	0	16.25336	No, Trazione
SLV 11	592	-2412	-24	0	0	0	0	13.97828	No, Trazione
SLV 12	592	-2412	-24	0	0	0	0	13.97828	No, Trazione
SLV 7	797	-1800	-37	0	0	0	0	13.97828	No, Trazione
SLV 4	182	-1734	-32	0	0	0	0	16.25336	No, Trazione
SLV 14	-1235	-4330	32	0.038	306.6	0.889	0.61411	16.25336	No
SLV 13	-1235	-4330	32	0.038	306.6	0.889	0.61411	16.25336	No
SLV 9	-1850	-4263	38	0.035	365.1	0.896	0.56946	13.97828	No
SLV 10	-1850	-4263	38	0.035	365.1	0.896	0.56946	13.97828	No

Tabella dei coefficienti di sicurezza minimi

Stato limite	Coeff.s.	Comb.	Verifica
PF_SLU	6.101	SLU 79	Si
V_SLU	6.286	SLU 50	Si
PF_SLV	0	SLV 8	No
V_SLV	0	SLV 1	No
PFFP_SLV	0	SLV 7	No
R_SLV	0	SLV 12	No

Maschio 276

Verifiche condotte secondo D.M. 17-01-18 (N.T.C.)

Dati geometrici

X ini.	Y ini.	X fin.	Y fin.	Quota i.	Quota.s	l	Sp.	h netta	h ini.	h fin.	a	a.s.,sx	a.s.,dx
-24.613	-3.183	-24.613	1.139	L7	F1	4.322	0.28	1.206	0.13	2.282			

Caratteristiche del materiale

(Circolare 7 21-01-19 C8.5.I) Muratura in mattoni pieni e malta di calce LC2_Corti

fb	fk	fvk0	fmedio	τ0	fv0	μ	ϕ	fv,lim	E	G	FC
600000			345000	9000	20000	0.58	0.77	32500	320000000	128000000	1.2

Verifica a pressoflessione nel piano secondo D.M. 17-01-18 NTC §7.8.2.2.1 in combinazioni non sismiche, γM = 3

Comb.	Quota	N	M	σ0	Mu	c.s.	Verifica
SLU 78	15.15	-6467	7327.3	5344	13057.31	1.782	Si
SLU 78	15.28	-6275	7615.28	5186	12697.17	1.667	Si
SLU 36	15.15	-5425	6419.96	4483	11077.33	1.725	Si
SLU 36	15.28	-5277	6650.6	4361	10793.34	1.623	Si
SLU 30	15.15	-5127	5892.21	4237	10503.36	1.783	Si
SLU 30	15.28	-4980	6116.64	4115	10217.45	1.67	Si
SLU 77	15.15	-6469	7322.9	5346	13061.23	1.784	Si
SLU 77	15.28	-6277	7611.52	5187	12701.1	1.669	Si
SLU 38	15.15	-5385	6341.65	4450	11001.66	1.735	Si
SLU 38	15.28	-5238	6571.97	4329	10717.42	1.631	Si
SLU 28	15.15	-5167	5970.51	4270	10579.47	1.772	Si
SLU 28	15.28	-5019	6195.27	4148	10293.81	1.662	Si
SLU 37	15.15	-5388	6337.25	4452	11005.68	1.737	Si
SLU 37	15.28	-5240	6568.21	4330	10721.45	1.632	Si
SLU 29	15.15	-5129	5887.8	4239	10507.4	1.785	Si
SLU 29	15.28	-4982	6112.88	4117	10221.51	1.672	Si
SLU 27	15.15	-5169	5966.11	4271	10583.51	1.774	Si
SLU 27	15.28	-5021	6191.5	4149	10297.87	1.663	Si
SLU 35	15.15	-5427	6415.56	4485	11081.34	1.727	Si
SLU 35	15.28	-5279	6646.83	4363	10797.36	1.624	Si

Verifica a pressoflessione nel piano secondo D.M. 17-01-18 NTC §7.8.2.2.1 in combinazioni sismiche, γM = 2

Comb.	Quota	N	M	σ0	Mu	c.s.	Verifica
SLV 11	15.15	-3112	3971.96	2572	6582.8	1.657	Si
SLV 11	15.28	-2926	4059.84	2418	6196.83	1.526	Si
SLV 16	15.15	-4111	4620.25	3397	8636.46	1.869	Si
SLV 16	15.28	-3956	4851.06	3269	8319.49	1.715	Si
SLV 3	15.15	-3491	3436.94	2885	7365.56	2.143	Si
SLV 3	15.28	-3328	3534.65	2750	7028.91	1.989	Si
SLV 15	15.15	-4111	4620.25	3397	8636.46	1.869	Si
SLV 15	15.28	-3956	4851.06	3269	8319.49	1.715	Si
SLV 8	15.15	-2926	3616.97	2418	6197.27	1.713	Si
SLV 8	15.28	-2737	3664.92	2262	5805.2	1.584	Si
SLV 4	15.15	-3491	3436.94	2885	7365.56	2.143	Si
SLV 4	15.28	-3328	3534.65	2750	7028.91	1.989	Si
SLV 7	15.15	-2926	3616.97	2418	6197.27	1.713	Si
SLV 7	15.28	-2737	3664.92	2262	5805.2	1.584	Si
SLV 14	15.15	-4781	4820.94	3951	9998.09	2.074	Si
SLV 14	15.28	-4650	5134.33	3843	9733.11	1.896	Si
SLV 13	15.15	-4781	4820.94	3951	9998.09	2.074	Si
SLV 13	15.28	-4650	5134.33	3843	9733.11	1.896	Si
SLV 12	15.15	-3112	3971.96	2572	6582.8	1.657	Si
SLV 12	15.28	-2926	4059.84	2418	6196.83	1.526	Si

Verifica a taglio nel piano secondo D.M. 17-01-18 (N.T.C.) §7.8.2.2.2 con rottura per scorrimento in combinazioni non sismiche, γM = 3

Comb.	Quota	N	V par	M	σ0	σN	l'	fvd	Vt scorr.	Vt fess.diag.	Vt,lim	c.s.	Verifica
SLU 69	15.15	-6211	-525	6873.45		7014	3.1626	6491	5748			10.95	Si
SLU 69	15.28	-6019	-525	7156.19		7372	2.9161	6538	5339			10.18	Si
SLU 78	15.15	-6467	-565	7327.3		7490	3.0835	6554	5659			10.01	Si
SLU 78	15.28	-6275	-565	7615.28		7886	2.8422	6607	5258			9.3	Si
SLU 80	15.15	-6427	-563	7249		7407	3.0993	6543	5678			10.09	Si
SLU 80	15.28	-6236	-563	7536.66		7795	2.857	6595	5276			9.38	Si
SLU 35	15.15	-5427	-507	6415.56		6601	2.9362	6436	5291			10.43	Si
SLU 35	15.28	-5279	-507	6646.83		6969	2.7057	6485	4913			9.69	Si
SLU 37	15.15	-5388	-505	6337.25		6514	2.9539	6424	5313			10.53	Si
SLU 37	15.28	-5240	-505	6568.21		6874	2.7224	6472	4933			9.78	Si
SLU 38	15.15	-5385	-500	6341.65		6520	2.9501	6425	5307			10.62	Si
SLU 38	15.28	-5238	-500	6571.97		6881	2.7187	6473	4928			9.86	Si
SLU 83	15.15	-6154	-530	6737.59		6872	3.1982	6472	5796			10.94	Si
SLU 83	15.28	-5963	-530	7020.99		7218	2.9502	6518	5384			10.16	Si
SLU 79	15.15	-6430	-568	7244.6		7402	3.1024	6542	5683			10.01	Si
SLU 79	15.28	-6238	-568	7532.89		7790	2.86	6594	5281			9.3	Si
SLU 36	15.15	-5425	-502	6419.96		6607	2.9324	6436	5285			10.52	Si
SLU 36	15.28	-5277	-502	6650.6		6975	2.7021	6486	4907			9.77	Si
SLU 77	15.15	-6469	-570	7322.9		7485	3.0866	6554	5664			9.94	Si
SLU 77	15.28	-6277	-570	7611.52		7880	2.8452	6606	5263			9.23	Si

Verifica a taglio nel piano secondo D.M. 17-01-18 (N.T.C.) §7.8.2.2.2 con rottura per scorrimento in combinazioni sismiche, γM = 2

Comb.	Quota	N	V par	M	σ0	σN	l'	fvd	Vt scorr.	Vt fess.diag.	Vt,lim	c.s.	Verifica
SLV 14	15.15	-4781	-1377	4820.94		4938	3.4579	9321	9025			6.55	Si
SLV 14	15.28	-4650	-1362	5134.33		5238	3.1706	9381	8328			6.11	Si
SLV 9	15.15	-5347	-2019	4640.91		4923	3.8787	9318	10120			5.01	Si
SLV 9	15.28	-5241	-1985	5004.06		5173	3.6183	9368	9491			4.78	Si
SLV 5	15.15	-5161	-1654	4285.92		4618	3.9912	9257	10345			6.25	Si

Comb.	Quota	N	V par	M	σ0	σN	l'	fvd	Vt scorr.	Vt fess.diag.	Vt,lim	c.s.	Verifica
SLV 5	15.28	-5053	-1624	4609.13		4817	3.746	9297	9751			6	Si
SLV 11	15.15	-3112	1029	3971.96		4188	2.6535	9171	6814			6.62	Si
SLV 11	15.28	-2926	998	4059.84		4504	2.3196	9234	5998			6.01	Si
SLV 7	15.15	-2926	1393	3616.97		3767	2.774	9087	7058			5.07	Si
SLV 7	15.28	-2737	1360	3664.92		3964	2.4658	9126	6301			4.63	Si
SLV 10	15.15	-5347	-2019	4640.91		4923	3.8787	9318	10120			5.01	Si
SLV 10	15.28	-5241	-1985	5004.06		5173	3.6183	9368	9491			4.78	Si
SLV 12	15.15	-3112	1029	3971.96		4188	2.6535	9171	6814			6.62	Si
SLV 12	15.28	-2926	998	4059.84		4504	2.3196	9234	5998			6.01	Si
SLV 13	15.15	-4781	-1377	4820.94		4938	3.4579	9321	9025			6.55	Si
SLV 13	15.28	-4650	-1362	5134.33		5238	3.1706	9381	8328			6.11	Si
SLV 6	15.15	-5161	-1654	4285.92		4618	3.9912	9257	10345			6.25	Si
SLV 6	15.28	-5053	-1624	4609.13		4817	3.746	9297	9751			6	Si
SLV 8	15.15	-2926	1393	3616.97		3767	2.774	9087	7058			5.07	Si
SLV 8	15.28	-2737	1360	3664.92		3964	2.4658	9126	6301			4.63	Si

Verifica a pressoflessione fuori piano D.M. 17-01-18 (N.T.C.)

quota 15.215 Wa 0.05 denominatore 8 γM = 2

Comb.	fd	Sa	σ0	N	M	Mc	Coeff.s.	Verifica
SLV 8	143750	0.56	2415	-2922	75.82	401.04	5.29	Si
SLV 7	143750	0.56	2415	-2922	75.82	401.04	5.29	Si
SLV 12	143750	0.56	2547	-3082	75.82	422.53	5.57	Si
SLV 11	143750	0.56	2547	-3082	75.82	422.53	5.57	Si
SLV 4	143750	0.56	2905	-3516	75.82	480.5	6.34	Si
SLV 3	143750	0.56	2905	-3516	75.82	480.5	6.34	Si
SLV 15	143750	0.56	3346	-4049	75.82	551.34	7.27	Si
SLV 16	143750	0.56	3346	-4049	75.82	551.34	7.27	Si
SLV 2	143750	0.56	3458	-4184	75.82	569.24	7.51	Si
SLV 1	143750	0.56	3458	-4184	75.82	569.24	7.51	Si

Verifica dei meccanismi locali di collasso con analisi cinematica lineare

forza di aggancio al piano = 0 quota mezzeria = 15.215 Wa = 0.05 Ta = 0.0087

Comb.	N top	N base	V orto	α0	M*	e*	a0*	aLim	Verifica
SLV 12	-2926	-3112	-741	0	511.3	0.903	0	4.89771	No
SLV 16	-3956	-4111	-1420	0	613.6	0.914	0	4.95783	No
SLV 14	-4650	-4781	-1210	0	683.2	0.921	0	4.95783	No
SLV 15	-3956	-4111	-1420	0	613.6	0.914	0	4.95783	No
SLV 4	-3328	-3491	1222	0	551.1	0.908	0	4.95783	No
SLV 13	-4650	-4781	-1210	0	683.2	0.921	0	4.95783	No
SLV 1	-4022	-4161	1433	0	620.2	0.915	0	4.95783	No
SLV 11	-2926	-3112	-741	0	511.3	0.903	0	4.89771	No
SLV 3	-3328	-3491	1222	0	551.1	0.908	0	4.95783	No
SLV 2	-4022	-4161	1433	0	620.2	0.915	0	4.95783	No

Tabella dei coefficienti di sicurezza minimi

Stato limite	Coeff.s.	Comb.	Verifica
PF_SLU	1.623	SLU 36	Si
V_SLU	9.233	SLU 77	Si
PF_SLV	1.526	SLV 11	Si
V_SLV	4.634	SLV 7	Si
PFFP_SLV	5.289	SLV 7	Si
R_SLV	0	SLV 1	No

Maschio 277

Verifiche condotte secondo D.M. 17-01-18 (N.T.C.)

Dati geometrici

X ini.	Y ini.	X fin.	Y fin.	Quota i.	Quota.s	l	Sp.	h netta	h ini.	h fin.	a	a.s.,sx	a.s.,dx
-24.613	1.139	-24.613	5.797	L7	F5	4.658	0.28	1.274	2.444	0.105			

Caratteristiche del materiale

(Circolare 7 21-01-19 C8.5.I) Muratura in mattoni pieni e malta di calce LC2_Corti

fb	fk	fvk0	fmedio	τ0	fv0	μ	ϕ	fv,lim	E	G	FC
600000			345000	9000	20000	0.58	0.77	32500	320000000	128000000	1.2

Verifica a pressoflessione nel piano secondo D.M. 17-01-18 NTC §7.8.2.2.1 in combinazioni non sismiche, γM = 3

Comb.	Quota	N	M	σ0	Mu	c.s.	Verifica
SLU 9	15.15	-3790	-2986.29	2906	8511.99	2.85	Si
SLU 9	15.26	-3756	-3095.22	2879	8437.87	2.726	Si
SLU 27	15.15	-3952	-3127.79	3030	8861.29	2.833	Si
SLU 27	15.26	-3917	-3244.59	3003	8786.8	2.708	Si
SLU 38	15.15	-4017	-3187.72	3080	9002.93	2.824	Si
SLU 38	15.26	-3983	-3308.62	3054	8928.53	2.699	Si
SLU 28	15.15	-3949	-3130.67	3028	8856.38	2.829	Si
SLU 28	15.26	-3915	-3247.11	3001	8781.89	2.705	Si
SLU 17	15.15	-3856	-3031.71	2956	8654.48	2.855	Si
SLU 17	15.26	-3821	-3145.41	2930	8580.47	2.728	Si
SLU 29	15.15	-3954	-3139.42	3031	8865.8	2.824	Si
SLU 29	15.26	-3919	-3255.91	3005	8791.31	2.7	Si
SLU 36	15.15	-4015	-3176.09	3078	8998.42	2.833	Si
SLU 36	15.26	-3981	-3297.3	3052	8924.02	2.706	Si
SLU 35	15.15	-4018	-3173.21	3080	9003.32	2.837	Si
SLU 35	15.26	-3983	-3294.77	3054	8928.92	2.71	Si
SLU 37	15.15	-4020	-3184.84	3082	9007.83	2.828	Si
SLU 37	15.26	-3985	-3306.1	3055	8933.44	2.702	Si

Comb.	Quota	N	M	σ0	Mu	c.s.	Verifica
SLU 30	15.15	-3951	-3142.3	3030	8860.9	2.82	Si
SLU 30	15.26	-3917	-3258.44	3003	8786.4	2.697	Si

Verifica a pressoflessione nel piano secondo D.M. 17-01-18 NTC §7.8.2.2.1 in combinazioni sismiche, γM = 2

Comb.	Quota	N	M	σ0	Mu	c.s.	Verifica
SLV 3	15.15	-3909	-2353.46	2997	8881.64	3.774	Si
SLV 3	15.26	-3872	-2540.66	2969	8798.89	3.463	Si
SLV 1	15.15	-3356	-3104.83	2573	7651.52	2.464	Si
SLV 1	15.26	-3302	-3165.85	2532	7531.47	2.379	Si
SLV 4	15.15	-3909	-2353.46	2997	8881.64	3.774	Si
SLV 4	15.26	-3872	-2540.66	2969	8798.89	3.463	Si
SLV 6	15.15	-2635	-3846.6	2020	6034.97	1.569	Si
SLV 6	15.26	-2570	-3744.11	1970	5888.29	1.573	Si
SLV 9	15.15	-2570	-3731.03	1970	5889.03	1.578	Si
SLV 9	15.26	-2512	-3614.58	1926	5757.43	1.593	Si
SLV 2	15.15	-3356	-3104.83	2573	7651.52	2.464	Si
SLV 2	15.26	-3302	-3165.85	2532	7531.47	2.379	Si
SLV 14	15.15	-3140	-2719.59	2407	7169.14	2.636	Si
SLV 14	15.26	-3109	-2734.08	2383	7099.06	2.597	Si
SLV 5	15.15	-2635	-3846.6	2020	6034.97	1.569	Si
SLV 5	15.26	-2570	-3744.11	1970	5888.29	1.573	Si
SLV 13	15.15	-3140	-2719.59	2407	7169.14	2.636	Si
SLV 13	15.26	-3109	-2734.08	2383	7099.06	2.597	Si
SLV 10	15.15	-2570	-3731.03	1970	5889.03	1.578	Si
SLV 10	15.26	-2512	-3614.58	1926	5757.43	1.593	Si

Verifica a taglio nel piano secondo D.M. 17-01-18 (N.T.C.) §7.8.2.2.2 con rottura per scorrimento in combinazioni non sismiche, γM = 3

Comb.	Quota	N	V par	M	σ0	σN	I'	fvd	Vt scorr.	Vt fess.diag.	Vt,lim	c.s.	Verifica
SLU 77	15.15	-5000	564	-3863.42		3833	4.6582	6067	7913			14.04	Si
SLU 77	15.26	-4955	564	-4011.74		3882	4.5585	6073	7752			13.76	Si
SLU 80	15.15	-5000	557	-3877.92		3833	4.6582	6067	7913			14.2	Si
SLU 80	15.26	-4955	557	-4025.58		3889	4.55	6074	7739			13.89	Si
SLU 83	15.15	-4864	524	-3642.29		3729	4.6582	6053	7895			15.08	Si
SLU 83	15.26	-4819	524	-3786.42		3717	4.6303	6051	7845			14.98	Si
SLU 84	15.15	-4862	520	-3645.17		3728	4.6582	6053	7894			15.17	Si
SLU 84	15.26	-4817	520	-3788.94		3718	4.6276	6051	7841			15.07	Si
SLU 71	15.15	-4936	515	-3829.62		3785	4.6582	6060	7904			15.34	Si
SLU 71	15.26	-4891	515	-3972.88		3839	4.5506	6067	7731			15	Si
SLU 35	15.15	-4018	502	-3173.21		3107	4.6177	5970	7719			15.38	Si
SLU 35	15.26	-3983	502	-3294.77		3157	4.5056	5977	7540			15.03	Si
SLU 78	15.15	-4998	560	-3866.29		3832	4.6582	6066	7912			14.13	Si
SLU 78	15.26	-4953	560	-4014.26		3883	4.5559	6073	7747			13.83	Si
SLU 69	15.15	-4934	518	-3818		3783	4.6582	6060	7904			15.26	Si
SLU 69	15.26	-4889	518	-3961.55		3832	4.5565	6067	7740			14.94	Si
SLU 70	15.15	-4932	515	-3820.87		3781	4.6582	6060	7904			15.36	Si
SLU 70	15.26	-4887	515	-3964.07		3833	4.5539	6067	7735			15.03	Si
SLU 79	15.15	-5002	561	-3875.04		3835	4.6582	6067	7913			14.11	Si
SLU 79	15.26	-4957	561	-4023.06		3889	4.5527	6074	7743			13.81	Si

Verifica a taglio nel piano secondo D.M. 17-01-18 (N.T.C.) §7.8.2.2.2 con rottura per scorrimento in combinazioni sismiche, γM = 2

Comb.	Quota	N	V par	M	σ0	σN	I'	fvd	Vt scorr.	Vt fess.diag.	Vt,lim	c.s.	Verifica
SLV 9	15.15	-2570	-2399	-3731.03		3487	2.6318	9031	6655			2.77	Si
SLV 9	15.26	-2512	-2305	-3614.58		3360	2.6697	9005	6732			2.92	Si
SLV 3	15.15	-3909	1156	-2353.46		2997	4.6582	8933	11651			10.08	Si
SLV 3	15.26	-3872	1129	-2540.66		2969	4.6582	8927	11643			10.31	Si
SLV 5	15.15	-2635	-2376	-3846.6		3609	2.6073	9055	6611			2.78	Si
SLV 5	15.26	-2570	-2281	-3744.11		3508	2.616	9035	6618			2.9	Si
SLV 8	15.15	-4479	3016	-1342.02		3434	4.6582	9020	11765			3.9	Si
SLV 8	15.26	-4469	2922	-1660.16		3426	4.6582	9019	11763			4.02	Si
SLV 11	15.15	-4415	2993	-1226.44		3385	4.6582	9010	11752			3.93	Si
SLV 11	15.26	-4411	2899	-1530.63		3382	4.6582	9010	11751			4.05	Si
SLV 4	15.15	-3909	1156	-2353.46		2997	4.6582	8933	11651			10.08	Si
SLV 4	15.26	-3872	1129	-2540.66		2969	4.6582	8927	11643			10.31	Si
SLV 7	15.15	-4479	3016	-1342.02		3434	4.6582	9020	11765			3.9	Si
SLV 7	15.26	-4469	2922	-1660.16		3426	4.6582	9019	11763			4.02	Si
SLV 12	15.15	-4415	2993	-1226.44		3385	4.6582	9010	11752			3.93	Si
SLV 12	15.26	-4411	2899	-1530.63		3382	4.6582	9010	11751			4.05	Si
SLV 6	15.15	-2635	-2376	-3846.6		3609	2.6073	9055	6611			2.78	Si
SLV 6	15.26	-2570	-2281	-3744.11		3508	2.616	9035	6618			2.9	Si
SLV 10	15.15	-2570	-2399	-3731.03		3487	2.6318	9031	6655			2.77	Si
SLV 10	15.26	-2512	-2305	-3614.58		3360	2.6697	9005	6732			2.92	Si

Verifica a pressoflessione fuori piano D.M. 17-01-18 (N.T.C.)

quota 15.203 Wa 0.05 denominatore 8 γM = 2

Comb.	fd	Sa	σ0	N	M	Mc	Coeff.s.	Verifica
SLV 10	143750	0.56	1971	-2571	91.21	354.11	3.88	Si
SLV 9	143750	0.56	1971	-2571	91.21	354.11	3.88	Si
SLV 5	143750	0.56	2018	-2633	91.21	362.48	3.97	Si
SLV 6	143750	0.56	2018	-2633	91.21	362.48	3.97	Si
SLV 13	143750	0.56	2405	-3137	91.21	430.49	4.72	Si
SLV 14	143750	0.56	2405	-3137	91.21	430.49	4.72	Si
SLV 1	143750	0.56	2563	-3343	91.21	458.15	5.02	Si
SLV 2	143750	0.56	2563	-3343	91.21	458.15	5.02	Si
SLV 15	143750	0.56	2824	-3683	91.21	503.77	5.52	Si
SLV 16	143750	0.56	2824	-3683	91.21	503.77	5.52	Si

Verifica dei meccanismi locali di collasso con analisi cinematica lineare

forza di aggancio al piano = 0 quota mezzeria = 15.203 Wa = 0.05 Ta = 0.0097

Comb.	N top	N base	V orto	α0	M*	e*	a0*	aLim	Verifica

Comb.	N top	N base	V orto	α0	M*	e*	a0*	aLim	Verifica
SLV 4	-3872	-3909	1451	0	635.7	0.909	0	5.01763	No
SLV 3	-3872	-3909	1451	0	635.7	0.909	0	5.01763	No
SLV 15	-3678	-3693	-1447	0	616.6	0.907	0	5.01763	No
SLV 1	-3302	-3356	1447	0	579.4	0.903	0	5.01763	No
SLV 2	-3302	-3356	1447	0	579.4	0.903	0	5.01763	No
SLV 14	-3109	-3140	-1452	0	560.4	0.901	0	5.01763	No
SLV 13	-3109	-3140	-1452	0	560.4	0.901	0	5.01763	No
SLV 16	-3678	-3693	-1447	0	616.6	0.907	0	5.01763	No
SLV 9	-2512	-2570	-442	0.041	502.2	0.895	0.6575	4.94946	No
SLV 10	-2512	-2570	-442	0.041	502.2	0.895	0.6575	4.94946	No

Tabella dei coefficienti di sicurezza minimi

Stato limite	Coeff.s.	Comb.	Verifica
PF_SLU	2.697	SLU 30	Si
V_SLU	13.756	SLU 77	Si
PF_SLV	1.569	SLV 5	Si
V_SLV	2.774	SLV 9	Si
PFFP_SLV	3.882	SLV 9	Si
R_SLV	0	SLV 1	No

2.4 Verifiche travi di accoppiamento in muratura

Le unità di misura elencate nel capitolo sono in [m, daN] ove non espressamente specificato.

X ini.: coordinata punto iniziale. [m]
Y ini.: coordinata punto iniziale. [m]
Z ini.inf.: coordinata punto iniziale. [m]
Z ini.sup.: coordinata punto iniziale. [m]
H ini.: altezza della sezione iniziale. [m]
X fin.: coordinata punto finale. [m]
Y fin.: coordinata punto finale. [m]
Z fin.inf.: coordinata punto finale. [m]
Z fin.sup: coordinata punto finale. [m]
H fin.: altezza della sezione finale. [m]
Luce: lunghezza della trave. [m]
Spessore: spessore. [m]
R. Trazione: resistenza a trazione dell'elemento teso disposto orizzontalmente. [daN]
fb_: resistenza normalizzata a compressione in direzione orizzontale dei blocchi. [daN/m²]
fhk: resistenza caratteristica a compressione della muratura utilizzata in direzione orizzontale. [daN/m²]
fvk0: resistenza caratteristica a taglio in assenza di carichi verticali. [daN/m²]
fhmedio: resistenza media a compressione della muratura utilizzata in direzione orizzontale. [daN/m²]
τ0: resistenza media a taglio in assenza di azioni normali [C8.7.1.16]. [daN/m²]
fv0: resistenza media a taglio in assenza di azioni normali [C8.7.1.17]. [daN/m²]
μ: coefficiente di attrito [C8.7.1.17].
φ: coefficiente di ammorsamento o ingranamento secondo Circolare 7 21-01-19 §C8.7.1.3.1.1.
fvk,lim: valore caratteristico massimo della resistenza a taglio che può essere impiegata nel calcolo (§11.10.3.3). [daN/m²]
E: modulo di elasticità longitudinale della muratura utilizzato. [daN/m²]
G: modulo di elasticità tangenziale della muratura utilizzato. [daN/m²]
FC: fattore di confidenza della muratura.
Sezione: sezione di verifica.
γM: fattore parziale di sicurezza del materiale.
N: sforzo normale. [daN]
*M: momento flettente nel piano. [daN*m]*
*Mu: momento ultimo. [daN*m]*
Comb.: combinazione.
c.s.: coefficiente di sicurezza.
Verifica: stato di verifica.
*M: momento flettente. [daN*m]*
V: taglio nel piano. [daN]
Vt: resistenza a taglio secondo [7.8.4]. [daN]
Vp: resistenza a taglio secondo [7.8.6]. [daN]
Vt fess. diag.: resistenza a taglio per fessurazione diagonale secondo §C8.7.1.3.1.1 formule [C8.7.1.16] ovvero [C8.7.1.17]. [daN]
Vt,lim: taglio limite [C8.1.7.18]. [daN]
Stato limite: pF_SLV=Presso flessione per azioni sismiche; V_SLV=Taglio per azioni sismiche.
Coeff.s.: coefficiente di sicurezza.

Trave di accoppiamento 1

Verifiche condotte secondo D.M. 17-01-18 (N.T.C.)

Dati geometrici

X ini.	Y ini.	Z ini.inf.	Z ini.sup.	H ini.	X fin.	Y fin.	Z fin.inf.	Z fin.sup	H fin.	Luce	Spessore	R. Trazione
-21.863	5.865	-1.67	0.33	2	-22.863	5.865	-1.67	0.33	2	1	0.45	30000

Caratteristiche del materiale

(Circolare 7 21-01-19 C8.5.I) Muratura in mattoni pieni e malta di calce LC2_Corti

fb_	fhk	fvk0	fhmedio	τ0	fv0	μ	ϕ	fvk,lim	E	G	FC
120000			172500	9000	20000	0.577	0.767	6500	320000000	128000000	1.2

Verifiche a pressoflessione delle travi in muratura in combinazioni non sismiche

Sezione	γM	N	M	Mu	Comb.	c.s.	Verifica
ini.	3	-4380	-1718.47	9132.35	SLU 84	5.31	Si
fin.	3	-4561	-2022.05	9132.35	SLU 84	4.52	Si
ini.	3	-4262	-1661.05	9132.35	SLU 75	5.5	Si
fin.	3	-4449	-1957.99	9132.35	SLU 75	4.66	Si
ini.	3	-4349	-1668.16	9132.35	SLU 79	5.47	Si
fin.	3	-4559	-2002.93	9132.35	SLU 79	4.56	Si
ini.	3	-4302	-1703.52	9132.35	SLU 82	5.36	Si
fin.	3	-4481	-1983.68	9132.35	SLU 82	4.6	Si
ini.	3	-4373	-1677.59	9132.35	SLU 77	5.44	Si
fin.	3	-4584	-2012.32	9132.35	SLU 77	4.54	Si
ini.	3	-4335	-1705.12	9132.35	SLU 81	5.36	Si
fin.	3	-4535	-1999.64	9132.35	SLU 81	4.57	Si
ini.	3	-4295	-1662.65	9132.35	SLU 74	5.49	Si
fin.	3	-4503	-1973.95	9132.35	SLU 74	4.63	Si
ini.	3	-4340	-1676	9132.35	SLU 78	5.45	Si
fin.	3	-4530	-1996.36	9132.35	SLU 78	4.57	Si
ini.	3	-4315	-1666.56	9132.35	SLU 80	5.48	Si
fin.	3	-4505	-1986.97	9132.35	SLU 80	4.6	Si
ini.	3	-4414	-1720.06	9132.35	SLU 83	5.31	Si
fin.	3	-4615	-2038.01	9132.35	SLU 83	4.48	Si

Verifiche a taglio delle travi in muratura secondo §C8.7.1.3.1 in combinazioni non sismiche

Sezione	γM	N	M	V	Vt	Vp	Vt fess. diag.	Vt,lim	Comb.	c.s.	Verifica
ini.	3	-4340	-1676	-4203			5202	2040	SLU 78	0.49	No
fin.	3	-4530	-1996.36	7948			5278	2066	SLU 78	0.26	No
ini.	3	-4349	-1668.16	-4203			5205	2041	SLU 79	0.49	No
fin.	3	-4559	-2002.93	7974			5290	2070	SLU 79	0.26	No
ini.	3	-4315	-1666.56	-4181			5192	2037	SLU 80	0.49	No
fin.	3	-4505	-1986.97	7909			5268	2063	SLU 80	0.26	No
ini.	3	-4262	-1661.05	-4113			5171	2029	SLU 75	0.49	No
fin.	3	-4449	-1957.99	7841			5246	2055	SLU 75	0.26	No
ini.	3	-4335	-1705.12	-4222			5200	2040	SLU 81	0.48	No
fin.	3	-4535	-1999.64	8070			5280	2067	SLU 81	0.26	No
ini.	3	-4295	-1662.65	-4135			5184	2034	SLU 74	0.49	No
fin.	3	-4503	-1973.95	7906			5267	2063	SLU 74	0.26	No
ini.	3	-4302	-1703.52	-4201			5187	2035	SLU 82	0.48	No
fin.	3	-4481	-1983.68	8005			5258	2060	SLU 82	0.26	No
ini.	3	-4414	-1720.06	-4313			5231	2050	SLU 83	0.48	No
fin.	3	-4615	-2038.01	8178			5312	2078	SLU 83	0.25	No
ini.	3	-4380	-1718.47	-4291			5218	2046	SLU 84	0.48	No
fin.	3	-4561	-2022.05	8112			5290	2071	SLU 84	0.26	No
ini.	3	-4373	-1677.59	-4225			5215	2045	SLU 77	0.48	No
fin.	3	-4584	-2012.32	8014			5300	2074	SLU 77	0.26	No

Verifiche a pressoflessione delle travi in muratura in combinazioni sismiche

Sezione	γM	N	M	Mu	Comb.	c.s.	Verifica
ini.	2	-11007	2567.06	13698.53	SLV 7	5.34	Si
fin.	2	-3579	-5268.54	13698.53	SLV 7	2.6	Si
ini.	2	-7417	2015.23	13698.53	SLV 3	6.8	Si
fin.	2	-1542	-4432.38	13698.53	SLV 3	3.09	Si
ini.	2	-7417	2015.23	13698.53	SLV 4	6.8	Si
fin.	2	-1542	-4432.38	13698.53	SLV 4	3.09	Si
ini.	2	5031	-4872.79	13698.53	SLV 10	2.81	Si
fin.	2	-2729	2545.13	13698.53	SLV 10	5.38	Si
ini.	2	-11007	2567.06	13698.53	SLV 8	5.34	Si
fin.	2	-3579	-5268.54	13698.53	SLV 8	2.6	Si
ini.	2	5031	-4872.79	13698.53	SLV 9	2.81	Si
fin.	2	-2729	2545.13	13698.53	SLV 9	5.38	Si
ini.	2	-9673	1214.01	13698.53	SLV 12	11.28	Si
fin.	2	-4725	-4016.71	13698.53	SLV 12	3.41	Si
ini.	2	1441	-4320.96	13698.53	SLV 13	3.17	Si
fin.	2	-4765	1708.96	13698.53	SLV 13	8.02	Si
ini.	2	1441	-4320.96	13698.53	SLV 14	3.17	Si
fin.	2	-4765	1708.96	13698.53	SLV 14	8.02	Si
ini.	2	-9673	1214.01	13698.53	SLV 11	11.28	Si
fin.	2	-4725	-4016.71	13698.53	SLV 11	3.41	Si

Verifiche a taglio delle travi in muratura secondo §C8.7.1.3.1 in combinazioni sismiche

Sezione	γM	N	M	V	Vt	Vp	Vt fess. diag.	Vt,lim	Comb.	c.s.	Verifica
ini.	2	5031	-4872.79	4634			5199	0	SLV 9	0	No
fin.	2	-2729	2545.13	5045			6291	2480	SLV 9	0.49	No
ini.	2	-7417	2015.23	-13267			8166	3184	SLV 4	0.24	No
fin.	2	-1542	-4432.38	-874			5816	2267	SLV 4	2.59	Si
ini.	2	-3006	189.19	-10460			6401	2527	SLV 2	0.24	No
fin.	2	-943	-2463.83	-2407			5576	2152	SLV 2	0.89	No
ini.	2	-2970	-2494.92	4919			6387	2521	SLV 16	0.51	No
fin.	2	-5364	-259.59	13341			7345	2897	SLV 16	0.22	No
ini.	2	-2970	-2494.92	4919			6387	2521	SLV 15	0.51	No
fin.	2	-5364	-259.59	13341			7345	2897	SLV 15	0.22	No
ini.	2	-3006	189.19	-10460			6401	2527	SLV 1	0.24	No
fin.	2	-943	-2463.83	-2407			5576	2152	SLV 1	0.89	No
ini.	2	5031	-4872.79	4634			5199	0	SLV 10	0	No

Sezione	γM	N	M	V	Vt	Vp	Vt fess. diag.	Vt,lim	Comb.	c.s.	Verifica
fin.	2	-2729	2545.13	5045			6291	2480	SLV 10	0.49	No
ini.	2	-7417	2015.23	-13267			8166	3184	SLV 3	0.24	No
fin.	2	-1542	-4432.38	-874			5816	2267	SLV 3	2.59	Si
ini.	2	1441	-4320.96	7725			5199	1613	SLV 13	0.21	No
fin.	2	-4765	1708.96	11808			7105	2807	SLV 13	0.24	No
ini.	2	1441	-4320.96	7725			5199	1613	SLV 14	0.21	No
fin.	2	-4765	1708.96	11808			7105	2807	SLV 14	0.24	No

Tabella dei coefficienti di sicurezza minimi

Stato limite	Coeff.s.	Comb.	Verifica
PF_SLV	2.6	SLV 7	Si
V_SLV	0	SLV 9	No
PF_SLU	4.481	SLU 83	Si
V_SLU	0.254	SLU 83	No

Trave di accoppiamento 2

Verifiche condotte secondo D.M. 17-01-18 (N.T.C.)

Dati geometrici

X ini.	Y ini.	Z ini.inf.	Z ini.sup.	H ini.	X fin.	Y fin.	Z fin.inf.	Z fin.sup	H fin.	Luce	Spessore	R. Trazione
-21.863	5.865	0.73	1.32	0.59	-22.863	5.865	0.73	1.32	0.59	1	0.45	30000

Caratteristiche del materiale

(Circolare 7 21-01-19 C8.5.I) Muratura in mattoni pieni e malta di calce LC2_Corti

fb_	fhk	fvk0	fhmedio	τ0	fv0	μ	ϕ	fvk,lim	E	G	FC
120000			172500	9000	20000	0.577	0.767	6500	320000000	128000000	1.2

Verifiche a pressoflessione delle travi in muratura in combinazioni non sismiche

Sezione	γM	N	M	Mu	Comb.	c.s.	Verifica
ini.	3	3141	-199.29	794.74	SLU 79	3.99	Si
fin.	3	2767	-312.67	794.74	SLU 79	2.54	Si
ini.	3	3147	-200.77	794.74	SLU 78	3.96	Si
fin.	3	2770	-311.39	794.74	SLU 78	2.55	Si
ini.	3	3080	-210.19	794.74	SLU 82	3.78	Si
fin.	3	2714	-308.32	794.74	SLU 82	2.58	Si
ini.	3	3165	-200.34	794.74	SLU 77	3.97	Si
fin.	3	2788	-314.08	794.74	SLU 77	2.53	Si
ini.	3	3095	-200.43	794.74	SLU 74	3.97	Si
fin.	3	2731	-306.35	794.74	SLU 74	2.59	Si
ini.	3	3149	-210.1	794.74	SLU 84	3.78	Si
fin.	3	2771	-316.06	794.74	SLU 84	2.51	Si
ini.	3	3167	-209.67	794.74	SLU 83	3.79	Si
fin.	3	2788	-318.75	794.74	SLU 83	2.49	Si
ini.	3	3078	-200.86	794.74	SLU 75	3.96	Si
fin.	3	2714	-303.66	794.74	SLU 75	2.62	Si
ini.	3	3123	-199.72	794.74	SLU 80	3.98	Si
fin.	3	2750	-309.97	794.74	SLU 80	2.56	Si
ini.	3	3097	-209.76	794.74	SLU 81	3.79	Si
fin.	3	2731	-311.02	794.74	SLU 81	2.56	Si

Verifiche a taglio delle travi in muratura secondo §C8.7.1.3.1 in combinazioni non sismiche

Sezione	γM	N	M	V	Vt	Vp	Vt fess. diag.	Vt,lim	Comb.	c.s.	Verifica
ini.	3	2850	-180.45	1951			682	0	SLU 53	0	No
fin.	3	2529	-275.51	-2241			682	0	SLU 53	0	No
ini.	3	2798	-180.12	1941			682	0	SLU 55	0	No
fin.	3	2479	-269.59	-2210			682	0	SLU 55	0	No
ini.	3	2896	-179.31	1958			682	0	SLU 58	0	No
fin.	3	2565	-281.82	-2271			682	0	SLU 58	0	No
ini.	3	2902	-180.78	1966			682	0	SLU 57	0	No
fin.	3	2568	-280.54	-2268			682	0	SLU 57	0	No
ini.	3	2920	-180.35	1967			682	0	SLU 56	0	No
fin.	3	2585	-283.24	-2280			682	0	SLU 56	0	No
ini.	3	2852	-189.78	2039			682	0	SLU 60	0	No
fin.	3	2529	-280.17	-2315			682	0	SLU 60	0	No
ini.	3	2878	-179.74	1958			682	0	SLU 59	0	No
fin.	3	2548	-279.12	-2258			682	0	SLU 59	0	No
ini.	3	2835	-190.21	2039			682	0	SLU 61	0	No
fin.	3	2511	-277.48	-2303			682	0	SLU 61	0	No
ini.	3	2015	-124.9	1337			682	0	SLU 1	0	No
fin.	3	1800	-188.22	-1532			682	0	SLU 1	0	No
ini.	3	2833	-180.88	1950			682	0	SLU 54	0	No
fin.	3	2511	-272.81	-2228			682	0	SLU 54	0	No

Verifiche a pressoflessione delle travi in muratura in combinazioni sismiche

Sezione	γM	N	M	Mu	Comb.	c.s.	Verifica
ini.	2	-3064	-2382.49	1192.11	SLV 9	0.5	No
fin.	2	528	2032.17	1192.11	SLV 9	0.59	No
ini.	2	7361	2107.57	1192.11	SLV 8	0.57	No
fin.	2	3290	-2444.67	1192.11	SLV 8	0.49	No
ini.	2	6183	1260.18	1192.11	SLV 4	0.95	No
fin.	2	2053	-1706.68	1192.11	SLV 4	0.7	No
ini.	2	6183	1260.18	1192.11	SLV 3	0.95	No
fin.	2	2053	-1706.68	1192.11	SLV 3	0.7	No
ini.	2	5731	1630.12	1192.11	SLV 12	0.73	No
fin.	2	3468	-1898.14	1192.11	SLV 12	0.63	No

Sezione	γM	N	M	Mu	Comb.	c.s.	Verifica
ini.	2	-1435	-1905.05	1192.11	SLV 6	0.63	No
fin.	2	350	1485.65	1192.11	SLV 6	0.8	No
ini.	2	5731	1630.12	1192.11	SLV 11	0.73	No
fin.	2	3468	-1898.14	1192.11	SLV 11	0.63	No
ini.	2	-1435	-1905.05	1192.11	SLV 5	0.63	No
fin.	2	350	1485.65	1192.11	SLV 5	0.8	No
ini.	2	7361	2107.57	1192.11	SLV 7	0.57	No
fin.	2	3290	-2444.67	1192.11	SLV 7	0.49	No
ini.	2	-3064	-2382.49	1192.11	SLV 10	0.5	No
fin.	2	528	2032.17	1192.11	SLV 10	0.59	No

Verifiche a taglio delle travi in muratura secondo §C8.7.1.3.1 in combinazioni sismiche

Sezione	γM	N	M	V	Vt	Vp	Vt fess. diag.	Vt,lim	Comb.	c.s.	Verifica
ini.	2	3544	56.39	-1331			1022	0	SLV 1	0	No
fin.	2	1171	-527.58	-4650			1022	132	SLV 1	0.03	No
ini.	2	-1887	-1535.1	3567			1526	599	SLV 13	0.17	No
fin.	2	1765	1294.18	1740			1022	0	SLV 13	0	No
ini.	2	7361	2107.57	1937			1022	0	SLV 8	0	No
fin.	2	3290	-2444.67	-3418			1022	0	SLV 8	0	No
ini.	2	-1887	-1535.1	3567			1526	599	SLV 14	0.17	No
fin.	2	1765	1294.18	1740			1022	0	SLV 14	0	No
ini.	2	5731	1630.12	3406			1022	0	SLV 12	0	No
fin.	2	3468	-1898.14	-1501			1022	0	SLV 12	0	No
ini.	2	6183	1260.18	-614			1022	0	SLV 3	0	No
fin.	2	2053	-1706.68	-5114			1022	0	SLV 3	0	No
ini.	2	6183	1260.18	-614			1022	0	SLV 4	0	No
fin.	2	2053	-1706.68	-5114			1022	0	SLV 4	0	No
ini.	2	3544	56.39	-1331			1022	0	SLV 2	0	No
fin.	2	1171	-527.58	-4650			1022	132	SLV 2	0.03	No
ini.	2	7361	2107.57	1937			1022	0	SLV 7	0	No
fin.	2	3290	-2444.67	-3418			1022	0	SLV 7	0	No
ini.	2	5731	1630.12	3406			1022	0	SLV 11	0	No
fin.	2	3468	-1898.14	-1501			1022	0	SLV 11	0	No

Tabella dei coefficienti di sicurezza minimi

Stato limite	Coeff.s.	Comb.	Verifica
PF_SLV	0.488	SLV 7	No
V_SLV	0	SLV 1	No
PF_SLU	2.493	SLU 83	Si
V_SLU	0	SLU 1	No

Trave di accoppiamento 3

Verifiche condotte secondo D.M. 17-01-18 (N.T.C.)

Dati geometrici

X ini.	Y ini.	Z ini.inf.	Z ini.sup.	H ini.	X fin.	Y fin.	Z fin.inf.	Z fin.sup	H fin.	Luce	Spessore	R. Trazione
-19.618	1.271	0.33	1.32	0.99	-19.618	2.071	0.33	1.32	0.99	0.8	0.3	30000

Caratteristiche del materiale

(Circolare 7 21-01-19 C8.5.I) Muratura in mattoni pieni e malta di calce LC2_Corti

fb_	fhk	fvk0	fhmedio	τ0	fv0	μ	ϕ	fvk,lim	E	G	FC
120000			172500	9000	20000	0.577	0.767	6500	320000000	128000000	1.2

Verifiche a pressoflessione delle travi in muratura in combinazioni non sismiche

Sezione	γM	N	M	Mu	Comb.	c.s.	Verifica
ini.	3	-370	-125.16	1491.77	SLU 83	11.92	Si
fin.	3	-1511	-1842.26	1491.77	SLU 83	0.81	No
ini.	3	-370	-123.82	1491.77	SLU 84	12.05	Si
fin.	3	-1508	-1832.53	1491.77	SLU 84	0.81	No
ini.	3	-364	-122.25	1491.77	SLU 81	12.2	Si
fin.	3	-1484	-1811.37	1491.77	SLU 81	0.82	No
ini.	3	-352	-121.34	1491.77	SLU 75	12.29	Si
fin.	3	-1446	-1772.76	1491.77	SLU 75	0.84	No
ini.	3	-363	-120.91	1491.77	SLU 82	12.34	Si
fin.	3	-1481	-1801.64	1491.77	SLU 82	0.83	No
ini.	3	-359	-124.25	1491.77	SLU 78	12.01	Si
fin.	3	-1473	-1803.65	1491.77	SLU 78	0.83	No
ini.	3	-359	-125.59	1491.77	SLU 77	11.88	Si
fin.	3	-1476	-1813.38	1491.77	SLU 77	0.82	No
ini.	3	-353	-122.68	1491.77	SLU 74	12.16	Si
fin.	3	-1449	-1782.49	1491.77	SLU 74	0.84	No
ini.	3	-357	-124.23	1491.77	SLU 79	12.01	Si
fin.	3	-1465	-1799.71	1491.77	SLU 79	0.83	No
ini.	3	-356	-122.9	1491.77	SLU 80	12.14	Si
fin.	3	-1462	-1789.98	1491.77	SLU 80	0.83	No

Verifiche a taglio delle travi in muratura secondo §C8.7.1.3.1 in combinazioni non sismiche

Sezione	γM	N	M	V	Vt	Vp	Vt fess. diag.	Vt,lim	Comb.	c.s.	Verifica
ini.	3	-356	-122.9	-1412			1286	502	SLU 80	0.36	No
fin.	3	-1462	-1789.98	-4222			1728	677	SLU 80	0.16	No
ini.	3	-370	-125.16	-1459			1292	505	SLU 83	0.35	No
fin.	3	-1511	-1842.26	-4342			1748	684	SLU 83	0.16	No
ini.	3	-357	-124.23	-1418			1287	502	SLU 79	0.35	No
fin.	3	-1465	-1799.71	-4239			1730	678	SLU 79	0.16	No
ini.	3	-370	-123.82	-1452			1292	504	SLU 84	0.35	No

Sezione	γM	N	M	V	Vt	Vp	Vt fess. diag.	Vt,lim	Comb.	c.s.	Verifica
fin.	3	-1508	-1832.53	-4325			1747	684	SLU 84	0.16	No
ini.	3	-364	-122.25	-1432			1289	503	SLU 81	0.35	No
fin.	3	-1484	-1811.37	-4273			1737	680	SLU 81	0.16	No
ini.	3	-359	-125.59	-1430			1288	503	SLU 77	0.35	No
fin.	3	-1476	-1813.38	-4270			1734	679	SLU 77	0.16	No
ini.	3	-359	-124.25	-1423			1287	502	SLU 78	0.35	No
fin.	3	-1473	-1803.65	-4252			1733	679	SLU 78	0.16	No
ini.	3	-353	-122.68	-1403			1285	501	SLU 74	0.36	No
fin.	3	-1449	-1782.49	-4201			1724	676	SLU 74	0.16	No
ini.	3	-363	-120.91	-1425			1289	503	SLU 82	0.35	No
fin.	3	-1481	-1801.64	-4256			1736	680	SLU 82	0.16	No
ini.	3	-352	-121.34	-1396			1285	501	SLU 75	0.36	No
fin.	3	-1446	-1772.76	-4183			1722	675	SLU 75	0.16	No

Verifiche a pressoflessione delle travi in muratura in combinazioni sismiche

Sezione	γM	N	M	Mu	Comb.	c.s.	Verifica
ini.	2	947	-626.26	2237.65	SLV 6	3.57	Si
fin.	2	1885	-1645.15	2237.65	SLV 6	1.36	Si
ini.	2	-634	18.14	2237.65	SLV 7	123.35	Si
fin.	2	-2485	-1356.41	2237.65	SLV 7	1.65	Si
ini.	2	168	-186.91	2237.65	SLV 10	11.97	Si
fin.	2	548	-1077.32	2237.65	SLV 10	2.08	Si
ini.	2	829	-719.97	2237.65	SLV 4	3.11	Si
fin.	2	605	-2119.93	2237.65	SLV 4	1.06	Si
ini.	2	168	-186.91	2237.65	SLV 9	11.97	Si
fin.	2	548	-1077.32	2237.65	SLV 9	2.08	Si
ini.	2	1303	-913.29	2237.65	SLV 2	2.45	Si
fin.	2	1916	-2206.55	2237.65	SLV 2	1.01	Si
ini.	2	947	-626.26	2237.65	SLV 5	3.57	Si
fin.	2	1885	-1645.15	2237.65	SLV 5	1.36	Si
ini.	2	829	-719.97	2237.65	SLV 3	3.11	Si
fin.	2	605	-2119.93	2237.65	SLV 3	1.06	Si
ini.	2	1303	-913.29	2237.65	SLV 1	2.45	Si
fin.	2	1916	-2206.55	2237.65	SLV 1	1.01	Si
ini.	2	-634	18.14	2237.65	SLV 8	123.35	Si
fin.	2	-2485	-1356.41	2237.65	SLV 8	1.65	Si

Verifiche a taglio delle travi in muratura secondo §C8.7.1.3.1 in combinazioni sismiche

Sezione	γM	N	M	V	Vt	Vp	Vt fess. diag.	Vt,lim	Comb.	c.s.	Verifica
ini.	2	-634	18.14	-1698			1969	771	SLV 7	0.45	No
fin.	2	-2485	-1356.41	-3889			2710	1056	SLV 7	0.27	No
ini.	2	829	-719.97	-1958			1716	429	SLV 4	0.22	No
fin.	2	605	-2119.93	-4513			1716	497	SLV 4	0.11	No
ini.	2	829	-719.97	-1958			1716	429	SLV 3	0.22	No
fin.	2	605	-2119.93	-4513			1716	497	SLV 3	0.11	No
ini.	2	1303	-913.29	-1659			1716	226	SLV 1	0.14	No
fin.	2	1916	-2206.55	-4168			1716	0	SLV 1	0	No
ini.	2	168	-186.91	-181			1716	608	SLV 9	3.35	Si
fin.	2	548	-1077.32	-1859			1716	513	SLV 9	0.28	No
ini.	2	947	-626.26	-703			1716	389	SLV 5	0.55	No
fin.	2	1885	-1645.15	-2739			1716	0	SLV 5	0	No
ini.	2	168	-186.91	-181			1716	608	SLV 10	3.35	Si
fin.	2	548	-1077.32	-1859			1716	513	SLV 10	0.28	No
ini.	2	1303	-913.29	-1659			1716	226	SLV 2	0.14	No
fin.	2	1916	-2206.55	-4168			1716	0	SLV 2	0	No
ini.	2	947	-626.26	-703			1716	389	SLV 6	0.55	No
fin.	2	1885	-1645.15	-2739			1716	0	SLV 6	0	No
ini.	2	-634	18.14	-1698			1969	771	SLV 8	0.45	No
fin.	2	-2485	-1356.41	-3889			2710	1056	SLV 8	0.27	No

Tabella dei coefficienti di sicurezza minimi

Stato limite	Coeff.s.	Comb.	Verifica
PF_SLV	1.014	SLV 1	Si
V_SLV	0	SLV 1	No
PF_SLU	0.81	SLU 83	No
V_SLU	0.158	SLU 83	No

Trave di accoppiamento 4

Verifiche condotte secondo D.M. 17-01-18 (N.T.C.)

Dati geometrici

X ini.	Y ini.	Z ini.inf.	Z ini.sup.	H ini.	X fin.	Y fin.	Z fin.inf.	Z fin.sup	H fin.	Luce	Spessore	R. Trazione
-19.618	4.851	0.33	1.32	0.99	-19.618	5.651	0.33	1.32	0.99	0.8	0.3	30000

Caratteristiche del materiale

(Circolare 7 21-01-19 C8.5.I) Muratura in mattoni pieni e malta di calce LC2_Corti

fb_	fhk	fvk0	fhmedio	τ0	fv0	μ	ϕ	fvk,lim	E	G	FC
120000			172500	9000	20000	0.577	0.767	6500	320000000	128000000	1.2

Verifiche a pressoflessione delle travi in muratura in combinazioni non sismiche

Sezione	γM	N	M	Mu	Comb.	c.s.	Verifica
ini.	3	-65	-612.69	1491.77	SLU 81	2.43	Si
fin.	3	1721	-346.35	1491.77	SLU 81	4.31	Si
ini.	3	-58	-619.81	1491.77	SLU 83	2.41	Si
fin.	3	1757	-355.8	1491.77	SLU 83	4.19	Si

Sezione	γM	N	M	Mu	Comb.	c.s.	Verifica
ini.	3	-23	-604.23	1491.77	SLU 77	2.47	Si
fin.	3	1762	-358.92	1491.77	SLU 77	4.16	Si
ini.	3	-18	-601.84	1491.77	SLU 78	2.48	Si
fin.	3	1757	-362.02	1491.77	SLU 78	4.12	Si
ini.	3	-25	-594.72	1491.77	SLU 75	2.51	Si
fin.	3	1721	-352.56	1491.77	SLU 75	4.23	Si
ini.	3	-24	-599.9	1491.77	SLU 79	2.49	Si
fin.	3	1747	-355.67	1491.77	SLU 79	4.19	Si
ini.	3	-52	-617.42	1491.77	SLU 84	2.42	Si
fin.	3	1752	-358.91	1491.77	SLU 84	4.16	Si
ini.	3	-18	-597.51	1491.77	SLU 80	2.5	Si
fin.	3	1743	-358.78	1491.77	SLU 80	4.16	Si
ini.	3	-59	-610.3	1491.77	SLU 82	2.44	Si
fin.	3	1716	-349.45	1491.77	SLU 82	4.27	Si
ini.	3	-31	-597.1	1491.77	SLU 74	2.5	Si
fin.	3	1726	-349.46	1491.77	SLU 74	4.27	Si

Verifiche a taglio delle travi in muratura secondo §C8.7.1.3.1 in combinazioni non sismiche

Sezione	γM	N	M	V	Vt	Vp	Vt fess. diag.	Vt,lim	Comb.	c.s.	Verifica
ini.	3	13	-535.96	4818			1144	428	SLU 54	0.09	No
fin.	3	1591	-324.08	519			1144	0	SLU 54	0	No
ini.	3	14	-545.47	4919			1144	427	SLU 56	0.09	No
fin.	3	1631	-330.43	539			1144	0	SLU 56	0	No
ini.	3	19	-538.75	4858			1144	426	SLU 59	0.09	No
fin.	3	1613	-330.29	519			1144	0	SLU 59	0	No
ini.	3	7	-538.34	4839			1144	429	SLU 53	0.09	No
fin.	3	1595	-320.97	532			1144	0	SLU 53	0	No
ini.	3	14	-541.14	4879			1144	427	SLU 58	0.09	No
fin.	3	1617	-327.19	533			1144	0	SLU 58	0	No
ini.	3	-22	-551.54	4916			1153	435	SLU 61	0.09	No
fin.	3	1586	-320.96	553			1144	0	SLU 61	0	No
ini.	3	16	-530.03	4764			1144	427	SLU 55	0.09	No
fin.	3	1574	-322.9	503			1144	0	SLU 55	0	No
ini.	3	38	-372.26	3370			1144	422	SLU 1	0.13	No
fin.	3	1141	-227.43	339			1144	0	SLU 1	0	No
ini.	3	-27	-553.93	4937			1155	436	SLU 60	0.09	No
fin.	3	1590	-317.86	567			1144	0	SLU 60	0	No
ini.	3	20	-543.08	4898			1144	426	SLU 57	0.09	No
fin.	3	1627	-333.54	525			1144	0	SLU 57	0	No

Verifiche a pressoflessione delle travi in muratura in combinazioni sismiche

Sezione	γM	N	M	Mu	Comb.	c.s.	Verifica
ini.	2	3290	-18.73	2237.65	SLV 3	119.45	Si
fin.	2	1444	-1656.93	2237.65	SLV 3	1.35	Si
ini.	2	5139	1097.46	2237.65	SLV 7	2.04	Si
fin.	2	3047	-2695.05	2237.65	SLV 7	0.83	No
ini.	2	3290	-18.73	2237.65	SLV 4	119.45	Si
fin.	2	1444	-1656.93	2237.65	SLV 4	1.35	Si
ini.	2	-3972	-1953.17	2237.65	SLV 6	1.15	Si
fin.	2	-838	1763.41	2237.65	SLV 6	1.27	Si
ini.	2	5139	1097.46	2237.65	SLV 8	2.04	Si
fin.	2	3047	-2695.05	2237.65	SLV 8	0.83	No
ini.	2	-5121	-1911.62	2237.65	SLV 9	1.17	Si
fin.	2	-629	2211.13	2237.65	SLV 9	1.01	Si
ini.	2	3991	1139.01	2237.65	SLV 11	1.96	Si
fin.	2	3256	-2247.34	2237.65	SLV 11	1	No
ini.	2	-5121	-1911.62	2237.65	SLV 10	1.17	Si
fin.	2	-629	2211.13	2237.65	SLV 10	1.01	Si
ini.	2	3991	1139.01	2237.65	SLV 12	1.96	Si
fin.	2	3256	-2247.34	2237.65	SLV 12	1	No
ini.	2	-3972	-1953.17	2237.65	SLV 5	1.15	Si
fin.	2	-838	1763.41	2237.65	SLV 5	1.27	Si

Verifiche a taglio delle travi in muratura secondo §C8.7.1.3.1 in combinazioni sismiche

Sezione	γM	N	M	V	Vt	Vp	Vt fess. diag.	Vt,lim	Comb.	c.s.	Verifica
ini.	2	3290	-18.73	-274			1716	0	SLV 3	0	No
fin.	2	1444	-1656.93	-3587			1716	108	SLV 3	0.03	No
ini.	2	5139	1097.46	-3112			1716	0	SLV 7	0	No
fin.	2	3047	-2695.05	-6538			1716	0	SLV 7	0	No
ini.	2	3991	1139.01	-1858			1716	0	SLV 11	0	No
fin.	2	3256	-2247.34	-5282			1716	0	SLV 11	0	No
ini.	2	5139	1097.46	-3112			1716	0	SLV 8	0	No
fin.	2	3047	-2695.05	-6538			1716	0	SLV 8	0	No
ini.	2	-3272	-795.42	7590			3024	1156	SLV 13	0.15	No
fin.	2	974	1173.01	4386			1716	379	SLV 13	0.09	No
ini.	2	3290	-18.73	-274			1716	0	SLV 4	0	No
fin.	2	1444	-1656.93	-3587			1716	108	SLV 4	0.03	No
ini.	2	-3272	-795.42	7590			3024	1156	SLV 14	0.15	No
fin.	2	974	1173.01	4386			1716	379	SLV 14	0.09	No
ini.	2	3991	1139.01	-1858			1716	0	SLV 12	0	No
fin.	2	3256	-2247.34	-5282			1716	0	SLV 12	0	No
ini.	2	-538	119.77	3904			1931	754	SLV 15	0.19	No
fin.	2	2140	-164.53	600			1716	0	SLV 15	0	No
ini.	2	-538	119.77	3904			1931	754	SLV 16	0.19	No
fin.	2	2140	-164.53	600			1716	0	SLV 16	0	No

Tabella dei coefficienti di sicurezza minimi

Stato limite	Coeff.s.	Comb.	Verifica
PF_SLV	0.83	SLV 7	No

Stato limite	Coeff.s.	Comb.	Verifica
V_SLV	0	SLV 3	No
PF_SLU	2.407	SLU 83	Si
V_SLU	0	SLU 1	No

Trave di accoppiamento 5

Verifiche condotte secondo D.M. 17-01-18 (N.T.C.)

Dati geometrici

X ini.	Y ini.	Z ini.inf.	Z ini.sup.	H ini.	X fin.	Y fin.	Z fin.inf.	Z fin.sup	H fin.	Luce	Spessore	R. Trazione
-21.367	-3.292	-1.67	0.33	2	-22.367	-3.292	-1.67	0.33	2	1	0.45	30000

Caratteristiche del materiale

(Circolare 7 21-01-19 C8.5.I) Muratura in mattoni pieni e malta di calce LC2_Corti

fb_	fhk	fvk0	fhmedio	τ0	fv0	μ	ϕ	fvk,lim	E	G	FC
120000			172500	9000	20000	0.577	0.767	6500	320000000	128000000	1.2

Verifiche a pressoflessione delle travi in muratura in combinazioni non sismiche

Sezione	γM	N	M	Mu	Comb.	c.s.	Verifica
ini.	3	-2543	-1111.81	9132.35	SLU 78	8.21	Si
fin.	3	-2440	-2156.75	9132.35	SLU 78	4.23	Si
ini.	3	-1989	-1178.65	9132.35	SLU 68	7.75	Si
fin.	3	-1793	-2192.23	9132.35	SLU 68	4.17	Si
ini.	3	-2039	-1163.71	9132.35	SLU 52	7.85	Si
fin.	3	-1791	-2205.62	9132.35	SLU 52	4.14	Si
ini.	3	-1984	-1166.59	9132.35	SLU 65	7.83	Si
fin.	3	-1769	-2188.76	9132.35	SLU 65	4.17	Si
ini.	3	-2631	-1114.42	9132.35	SLU 82	8.19	Si
fin.	3	-2477	-2204.24	9132.35	SLU 82	4.14	Si
ini.	3	-2044	-1175.76	9132.35	SLU 55	7.77	Si
fin.	3	-1816	-2209.09	9132.35	SLU 55	4.13	Si
ini.	3	-2636	-1126.48	9132.35	SLU 84	8.11	Si
fin.	3	-2502	-2207.71	9132.35	SLU 84	4.14	Si
ini.	3	-2242	-1242.45	9132.35	SLU 73	7.35	Si
fin.	3	-2007	-2349.52	9132.35	SLU 73	3.89	Si
ini.	3	-2247	-1254.5	9132.35	SLU 76	7.28	Si
fin.	3	-2031	-2352.99	9132.35	SLU 76	3.88	Si
ini.	3	-2538	-1099.75	9132.35	SLU 75	8.3	Si
fin.	3	-2416	-2153.28	9132.35	SLU 75	4.24	Si

Verifiche a taglio delle travi in muratura secondo §C8.7.1.3.1 in combinazioni non sismiche

Sezione	γM	N	M	V	Vt	Vp	Vt fess. diag.	Vt,lim	Comb.	c.s.	Verifica
ini.	3	-2543	-1111.81	-4470			4483	1773	SLU 78	0.4	No
fin.	3	-2440	-2156.75	4459			4442	1756	SLU 78	0.39	No
ini.	3	-2530	-1106.02	-4447			4478	1771	SLU 80	0.4	No
fin.	3	-2424	-2142.28	4435			4436	1754	SLU 80	0.4	No
ini.	3	-2538	-1099.75	-4484			4481	1772	SLU 75	0.4	No
fin.	3	-2416	-2153.28	4409			4432	1752	SLU 75	0.4	No
ini.	3	-2242	-1242.45	-4663			4363	1724	SLU 73	0.37	No
fin.	3	-2007	-2349.52	4251			4269	1685	SLU 73	0.4	No
ini.	3	-2636	-1126.48	-4667			4520	1788	SLU 84	0.38	No
fin.	3	-2502	-2207.71	4580			4467	1766	SLU 84	0.39	No
ini.	3	-2039	-1163.71	-4295			4282	1690	SLU 52	0.39	No
fin.	3	-1791	-2205.62	3830			4183	1648	SLU 52	0.43	No
ini.	3	-2247	-1254.5	-4649			4365	1725	SLU 76	0.37	No
fin.	3	-2031	-2352.99	4302			4278	1689	SLU 76	0.39	No
ini.	3	-2044	-1175.76	-4281			4284	1691	SLU 55	0.4	No
fin.	3	-1816	-2209.09	3880			4192	1653	SLU 55	0.43	No
ini.	3	-2631	-1114.42	-4681			4518	1787	SLU 82	0.38	No
fin.	3	-2477	-2204.24	4530			4457	1762	SLU 82	0.39	No
ini.	3	-3053	-885.66	-4385			4687	1853	SLU 83	0.42	No
fin.	3	-3054	-1886.43	4705			4688	1853	SLU 83	0.39	No

Verifiche a pressoflessione delle travi in muratura in combinazioni sismiche

Sezione	γM	N	M	Mu	Comb.	c.s.	Verifica
ini.	2	-5155	1154.63	13698.53	SLV 2	11.86	Si
fin.	2	227	-4407.53	13698.53	SLV 2	3.11	Si
ini.	2	-540	-3835.06	13698.53	SLV 10	3.57	Si
fin.	2	-1020	-4222.3	13698.53	SLV 10	3.24	Si
ini.	2	-2484	-2337.67	13698.53	SLV 6	5.86	Si
fin.	2	78	-5455.66	13698.53	SLV 6	2.51	Si
ini.	2	1323	-3836.67	13698.53	SLV 13	3.57	Si
fin.	2	-3435	-296.35	13698.53	SLV 13	46.22	Si
ini.	2	-5155	1154.63	13698.53	SLV 1	11.86	Si
fin.	2	227	-4407.53	13698.53	SLV 1	3.11	Si
ini.	2	1323	-3836.67	13698.53	SLV 14	3.57	Si
fin.	2	-3435	-296.35	13698.53	SLV 14	46.22	Si
ini.	2	-2484	-2337.67	13698.53	SLV 5	5.86	Si
fin.	2	78	-5455.66	13698.53	SLV 5	2.51	Si
ini.	2	-1695	1151.65	13698.53	SLV 11	11.89	Si
fin.	2	-4258	2883.53	13698.53	SLV 11	4.75	Si
ini.	2	-540	-3835.06	13698.53	SLV 9	3.57	Si
fin.	2	-1020	-4222.3	13698.53	SLV 9	3.24	Si
ini.	2	-1695	1151.65	13698.53	SLV 12	11.89	Si
fin.	2	-4258	2883.53	13698.53	SLV 12	4.75	Si

Verifiche a taglio delle travi in muratura secondo §C8.7.1.3.1 in combinazioni sismiche

Sezione	γM	N	M	V	Vt	Vp	Vt fess. diag.	Vt,lim	Comb.	c.s.	Verifica
ini.	2	-5502	2650.64	-13012			7400	2917	SLV 3	0.22	No
fin.	2	-745	-2275.78	-6599			5497	2112	SLV 3	0.32	No
ini.	2	-5155	1154.63	-13663			7261	2866	SLV 1	0.21	No
fin.	2	227	-4407.53	-5216			5199	1907	SLV 1	0.37	No
ini.	2	976	-2340.65	7842			5199	1731	SLV 16	0.22	No
fin.	2	-4407	1835.4	11448			6962	2753	SLV 16	0.24	No
ini.	2	-540	-3835.06	-868			5415	2071	SLV 9	2.39	Si
fin.	2	-1020	-4222.3	8128			5607	2167	SLV 9	0.27	No
ini.	2	1323	-3836.67	7190			5199	1644	SLV 13	0.23	No
fin.	2	-3435	-296.35	12831			6573	2598	SLV 13	0.2	No
ini.	2	-5502	2650.64	-13012			7400	2917	SLV 4	0.22	No
fin.	2	-745	-2275.78	-6599			5497	2112	SLV 4	0.32	No
ini.	2	1323	-3836.67	7190			5199	1644	SLV 14	0.23	No
fin.	2	-3435	-296.35	12831			6573	2598	SLV 14	0.2	No
ini.	2	-540	-3835.06	-868			5415	2071	SLV 10	2.39	Si
fin.	2	-1020	-4222.3	8128			5607	2167	SLV 10	0.27	No
ini.	2	-5155	1154.63	-13663			7261	2866	SLV 2	0.21	No
fin.	2	227	-4407.53	-5216			5199	1907	SLV 2	0.37	No
ini.	2	976	-2340.65	7842			5199	1731	SLV 15	0.22	No
fin.	2	-4407	1835.4	11448			6962	2753	SLV 15	0.24	No

Tabella dei coefficienti di sicurezza minimi

Stato limite	Coeff.s.	Comb.	Verifica
PF_SLV	2.511	SLV 5	Si
V_SLV	0.202	SLV 13	No
PF_SLU	3.881	SLU 76	Si
V_SLU	0.37	SLU 73	No

Trave di accoppiamento 6

Verifiche condotte secondo D.M. 17-01-18 (N.T.C.)

Dati geometrici

X ini.	Y ini.	Z ini.inf.	Z ini.sup.	H ini.	X fin.	Y fin.	Z fin.inf.	Z fin.sup	H fin.	Luce	Spessore	R. Trazione
-21.367	-3.292	0.73	1.32	0.59	-22.367	-3.292	0.73	1.32	0.59	1	0.45	30000

Caratteristiche del materiale

(Circolare 7 21-01-19 C8.5.I) Muratura in mattoni pieni e malta di calce LC2_Corti

fb_	fhk	fvk0	fhmedio	τ0	fv0	μ	ϕ	fvk,lim	E	G	FC
120000			172500	9000	20000	0.577	0.767	6500	320000000	128000000	1.2

Verifiche a pressoflessione delle travi in muratura in combinazioni non sismiche

Sezione	γM	N	M	Mu	Comb.	c.s.	Verifica
ini.	3	2360	-129.02	794.74	SLU 81	6.16	Si
fin.	3	2458	-362.25	794.74	SLU 81	2.19	Si
ini.	3	2368	-132.04	794.74	SLU 83	6.02	Si
fin.	3	2486	-361.89	794.74	SLU 83	2.2	Si
ini.	3	3021	-143.36	794.74	SLU 80	5.54	Si
fin.	3	3030	-353.78	794.74	SLU 80	2.25	Si
ini.	3	3477	-148.8	794.74	SLU 73	5.34	Si
fin.	3	3360	-360.09	794.74	SLU 73	2.21	Si
ini.	3	3486	-151.82	794.74	SLU 76	5.23	Si
fin.	3	3388	-359.73	794.74	SLU 76	2.21	Si
ini.	3	2326	-123.24	794.74	SLU 74	6.45	Si
fin.	3	2448	-348.4	794.74	SLU 74	2.28	Si
ini.	3	3079	-149.28	794.74	SLU 84	5.32	Si
fin.	3	3066	-370.27	794.74	SLU 84	2.15	Si
ini.	3	3046	-143.5	794.74	SLU 78	5.54	Si
fin.	3	3056	-356.42	794.74	SLU 78	2.23	Si
ini.	3	3070	-146.26	794.74	SLU 82	5.43	Si
fin.	3	3038	-370.63	794.74	SLU 82	2.14	Si
ini.	3	3037	-140.48	794.74	SLU 75	5.66	Si
fin.	3	3028	-356.78	794.74	SLU 75	2.23	Si

Verifiche a taglio delle travi in muratura secondo §C8.7.1.3.1 in combinazioni non sismiche

Sezione	γM	N	M	V	Vt	Vp	Vt fess. diag.	Vt,lim	Comb.	c.s.	Verifica
ini.	3	2874	-122.23	2454			682	0	SLU 54	0	No
fin.	3	2850	-325.75	-3641			682	0	SLU 54	0	No
ini.	3	2172	-108.02	2153			682	0	SLU 56	0	No
fin.	3	2299	-317	-3107			682	0	SLU 56	0	No
ini.	3	2147	-107.87	2142			682	0	SLU 58	0	No
fin.	3	2273	-314.37	-3090			682	0	SLU 58	0	No
ini.	3	2163	-104.99	2136			682	0	SLU 53	0	No
fin.	3	2270	-317.37	-3104			682	0	SLU 53	0	No
ini.	3	2907	-128.01	2575			682	0	SLU 61	0	No
fin.	3	2860	-339.6	-3829			682	0	SLU 61	0	No
ini.	3	2196	-110.77	2256			682	0	SLU 60	0	No
fin.	3	2280	-331.22	-3291			682	0	SLU 60	0	No
ini.	3	1562	-67.07	1433			682	0	SLU 1	0	No
fin.	3	1636	-221.62	-2101			682	0	SLU 1	0	No
ini.	3	2858	-125.11	2461			682	0	SLU 59	0	No
fin.	3	2853	-322.75	-3628			682	0	SLU 59	0	No
ini.	3	2882	-125.26	2471			682	0	SLU 57	0	No
fin.	3	2879	-325.39	-3645			682	0	SLU 57	0	No
ini.	3	3323	-133.58	2657			682	0	SLU 55	0	No

Sezione	γM	N	M	V	Vt	Vp	Vt fess. diag.	Vt,lim	Comb.	c.s.	Verifica
fin.	3	3211	-328.7	-3983			682	0	SLU 55	0	No

Verifiche a pressoflessione delle travi in muratura in combinazioni sismiche

Sezione	γM	N	M	Mu	Comb.	c.s.	Verifica
ini.	2	10600	80.41	1192.11	SLV 6	14.83	Si
fin.	2	8265	-475.17	1192.11	SLV 6	2.51	Si
ini.	2	6714	599.33	1192.11	SLV 2	1.99	Si
fin.	2	2814	-997.72	1192.11	SLV 2	1.19	Si
ini.	2	1816	628.75	1192.11	SLV 4	1.9	Si
fin.	2	-1280	-993.11	1192.11	SLV 4	1.2	Si
ini.	2	-3408	-755.83	1192.11	SLV 16	1.58	Si
fin.	2	645	515.25	1192.11	SLV 16	2.31	Si
ini.	2	6714	599.33	1192.11	SLV 1	1.99	Si
fin.	2	2814	-997.72	1192.11	SLV 1	1.19	Si
ini.	2	1490	-785.25	1192.11	SLV 14	1.52	Si
fin.	2	4739	510.64	1192.11	SLV 14	2.33	Si
ini.	2	-3408	-755.83	1192.11	SLV 15	1.58	Si
fin.	2	645	515.25	1192.11	SLV 15	2.31	Si
ini.	2	1490	-785.25	1192.11	SLV 13	1.52	Si
fin.	2	4739	510.64	1192.11	SLV 13	2.33	Si
ini.	2	10600	80.41	1192.11	SLV 5	14.83	Si
fin.	2	8265	-475.17	1192.11	SLV 5	2.51	Si
ini.	2	1816	628.75	1192.11	SLV 3	1.9	Si
fin.	2	-1280	-993.11	1192.11	SLV 3	1.2	Si

Verifiche a taglio delle travi in muratura secondo §C8.7.1.3.1 in combinazioni sismiche

Sezione	γM	N	M	V	Vt	Vp	Vt fess. diag.	Vt,lim	Comb.	c.s.	Verifica
ini.	2	1490	-785.25	4220			1022	0	SLV 14	0	No
fin.	2	4739	510.64	92			1022	0	SLV 14	0	No
ini.	2	9033	-334.97	3267			1022	0	SLV 9	0	No
fin.	2	8842	-22.66	-3064			1022	0	SLV 9	0	No
ini.	2	1816	628.75	-997			1022	0	SLV 3	0	No
fin.	2	-1280	-993.11	-4790			1364	539	SLV 3	0.11	No
ini.	2	1816	628.75	-997			1022	0	SLV 4	0	No
fin.	2	-1280	-993.11	-4790			1364	539	SLV 4	0.11	No
ini.	2	6714	599.33	-421			1022	0	SLV 1	0	No
fin.	2	2814	-997.72	-5744			1022	0	SLV 1	0	No
ini.	2	9033	-334.97	3267			1022	0	SLV 10	0	No
fin.	2	8842	-22.66	-3064			1022	0	SLV 10	0	No
ini.	2	10600	80.41	1875			1022	0	SLV 6	0	No
fin.	2	8265	-475.17	-4815			1022	0	SLV 6	0	No
ini.	2	6714	599.33	-421			1022	0	SLV 2	0	No
fin.	2	2814	-997.72	-5744			1022	0	SLV 2	0	No
ini.	2	10600	80.41	1875			1022	0	SLV 5	0	No
fin.	2	8265	-475.17	-4815			1022	0	SLV 5	0	No
ini.	2	1490	-785.25	4220			1022	0	SLV 13	0	No
fin.	2	4739	510.64	92			1022	0	SLV 13	0	No

Tabella dei coefficienti di sicurezza minimi

Stato limite	Coeff.s.	Comb.	Verifica
PF_SLV	1.195	SLV 1	Si
V_SLV	0	SLV 1	No
PF_SLU	2.144	SLU 82	Si
V_SLU	0	SLU 1	No

Trave di accoppiamento 7

Verifiche condotte secondo D.M. 17-01-18 (N.T.C.)

Dati geometrici

X ini.	Y ini.	Z ini.inf.	Z ini.sup.	H ini.	X fin.	Y fin.	Z fin.inf.	Z fin.sup	H fin.	Luce	Spessore	R. Trazione
-17.267	-3.292	-1.67	0.33	2	-18.267	-3.292	-1.67	0.33	2	1	0.45	30000

Caratteristiche del materiale

(Circolare 7 21-01-19 C8.5.I) Muratura in mattoni pieni e malta di calce LC2_Corti

fb_	fhk	fvk0	fhmedio	τ0	fv0	μ	ϕ	fvk,lim	E	G	FC
120000			172500	9000	20000	0.577	0.767	6500	320000000	128000000	1.2

Verifiche a pressoflessione delle travi in muratura in combinazioni non sismiche

Sezione	γM	N	M	Mu	Comb.	c.s.	Verifica
ini.	3	-326	-4262.08	9132.35	SLU 84	2.14	Si
fin.	3	-1597	-1692.61	9132.35	SLU 84	5.4	Si
ini.	3	-245	-4169.23	9132.35	SLU 78	2.19	Si
fin.	3	-1524	-1636.91	9132.35	SLU 78	5.58	Si
ini.	3	-259	-4136.96	9132.35	SLU 75	2.21	Si
fin.	3	-1521	-1629.82	9132.35	SLU 75	5.6	Si
ini.	3	-146	-4120.59	9132.35	SLU 77	2.22	Si
fin.	3	-1193	-1779.32	9132.35	SLU 77	5.13	Si
ini.	3	-340	-4229.8	9132.35	SLU 82	2.16	Si
fin.	3	-1595	-1685.52	9132.35	SLU 82	5.42	Si
ini.	3	-362	-4102	9132.35	SLU 73	2.23	Si
fin.	3	-1748	-1515.65	9132.35	SLU 73	6.03	Si
ini.	3	-241	-4181.16	9132.35	SLU 81	2.18	Si
fin.	3	-1264	-1827.93	9132.35	SLU 81	5	Si
ini.	3	-226	-4213.43	9132.35	SLU 83	2.17	Si
fin.	3	-1267	-1835.02	9132.35	SLU 83	4.98	Si

Sezione	γM	N	M	Mu	Comb.	c.s.	Verifica
ini.	3	-348	-4134.28	9132.35	SLU 76	2.21	Si
fin.	3	-1751	-1522.73	9132.35	SLU 76	6	Si
ini.	3	-267	-4134.12	9132.35	SLU 80	2.21	Si
fin.	3	-1533	-1624.76	9132.35	SLU 80	5.62	Si

Verifiche a taglio delle travi in muratura secondo §C8.7.1.3.1 in combinazioni non sismiche

Sezione	γM	N	M	V	Vt	Vp	Vt fess. diag.	Vt,lim	Comb.	c.s.	Verifica
ini.	3	-259	-4136.96	-6080			3570	1360	SLU 75	0.22	No
fin.	3	-1521	-1629.82	10756			4075	1601	SLU 75	0.15	No
ini.	3	-241	-4181.16	-6402			3562	1356	SLU 81	0.21	No
fin.	3	-1264	-1827.93	10255			3972	1555	SLU 81	0.15	No
ini.	3	-362	-4102	-6035			3611	1381	SLU 73	0.23	No
fin.	3	-1748	-1515.65	11107			4165	1641	SLU 73	0.15	No
ini.	3	-348	-4134.28	-6045			3605	1378	SLU 76	0.23	No
fin.	3	-1751	-1522.73	11185			4166	1641	SLU 76	0.15	No
ini.	3	-146	-4120.59	-6121			3524	1336	SLU 77	0.22	No
fin.	3	-1193	-1779.32	10082			3943	1542	SLU 77	0.15	No
ini.	3	-340	-4229.8	-6371			3602	1376	SLU 82	0.22	No
fin.	3	-1595	-1685.52	11007			4104	1614	SLU 82	0.15	No
ini.	3	-245	-4169.23	-6089			3564	1357	SLU 78	0.22	No
fin.	3	-1524	-1636.91	10834			4076	1602	SLU 78	0.15	No
ini.	3	-226	-4213.43	-6412			3557	1353	SLU 83	0.21	No
fin.	3	-1267	-1835.02	10333			3973	1556	SLU 83	0.15	No
ini.	3	-267	-4134.12	-6075			3573	1361	SLU 80	0.22	No
fin.	3	-1533	-1624.76	10761			4079	1603	SLU 80	0.15	No
ini.	3	-326	-4262.08	-6380			3596	1373	SLU 84	0.22	No
fin.	3	-1597	-1692.61	11084			4105	1615	SLU 84	0.15	No

Verifiche a pressoflessione delle travi in muratura in combinazioni sismiche

Sezione	γM	N	M	Mu	Comb.	c.s.	Verifica
ini.	2	-45	-3205.26	13698.53	SLV 11	4.27	Si
fin.	2	747	-2359.06	13698.53	SLV 11	5.81	Si
ini.	2	4149	-6781.96	13698.53	SLV 15	2.02	Si
fin.	2	-749	-632.57	13698.53	SLV 15	21.66	Si
ini.	2	4149	-6781.96	13698.53	SLV 16	2.02	Si
fin.	2	-749	-632.57	13698.53	SLV 16	21.66	Si
ini.	2	2634	-4986.63	13698.53	SLV 9	2.75	Si
fin.	2	-2659	516.17	13698.53	SLV 9	26.54	Si
ini.	2	4953	-7316.37	13698.53	SLV 13	1.87	Si
fin.	2	-1771	230	13698.53	SLV 13	59.56	Si
ini.	2	2634	-4986.63	13698.53	SLV 10	2.75	Si
fin.	2	-2659	516.17	13698.53	SLV 10	26.54	Si
ini.	2	4953	-7316.37	13698.53	SLV 14	1.87	Si
fin.	2	-1771	230	13698.53	SLV 14	59.56	Si
ini.	2	-45	-3205.26	13698.53	SLV 12	4.27	Si
fin.	2	747	-2359.06	13698.53	SLV 12	5.81	Si
ini.	2	-2836	-673.94	13698.53	SLV 7	20.33	Si
fin.	2	1008	-2976.35	13698.53	SLV 7	4.6	Si
ini.	2	-2836	-673.94	13698.53	SLV 8	20.33	Si
fin.	2	1008	-2976.35	13698.53	SLV 8	4.6	Si

Verifiche a taglio delle travi in muratura secondo §C8.7.1.3.1 in combinazioni sismiche

Sezione	γM	N	M	V	Vt	Vp	Vt fess. diag.	Vt,lim	Comb.	c.s.	Verifica
ini.	2	4953	-7316.37	4287			5199	0	SLV 13	0	No
fin.	2	-1771	230	20207			5907	2310	SLV 13	0.11	No
ini.	2	2634	-4986.63	-3225			5199	1260	SLV 9	0.39	No
fin.	2	-2659	516.17	16831			6262	2468	SLV 9	0.15	No
ini.	2	4953	-7316.37	4287			5199	0	SLV 14	0	No
fin.	2	-1771	230	20207			5907	2310	SLV 14	0.11	No
ini.	2	-5155	1655.8	-12709			7261	2866	SLV 4	0.23	No
fin.	2	120	-2690.18	-6344			5199	1930	SLV 4	0.3	No
ini.	2	-4351	1121.39	-13740			6940	2744	SLV 1	0.2	No
fin.	2	-902	-1827.61	-2443			5560	2144	SLV 1	0.88	No
ini.	2	-5155	1655.8	-12709			7261	2866	SLV 3	0.23	No
fin.	2	120	-2690.18	-6344			5199	1930	SLV 3	0.3	No
ini.	2	2634	-4986.63	-3225			5199	1260	SLV 10	0.39	No
fin.	2	-2659	516.17	16831			6262	2468	SLV 10	0.15	No
ini.	2	4149	-6781.96	5318			5199	546	SLV 16	0.1	No
fin.	2	-749	-632.57	16306			5499	2113	SLV 16	0.13	No
ini.	2	4149	-6781.96	5318			5199	546	SLV 15	0.1	No
fin.	2	-749	-632.57	16306			5499	2113	SLV 15	0.13	No
ini.	2	-4351	1121.39	-13740			6940	2744	SLV 2	0.2	No
fin.	2	-902	-1827.61	-2443			5560	2144	SLV 2	0.88	No

Tabella dei coefficienti di sicurezza minimi

Stato limite	Coeff.s.	Comb.	Verifica
PF_SLV	1.872	SLV 13	Si
V_SLV	0	SLV 13	No
PF_SLU	2.143	SLU 84	Si
V_SLU	0.146	SLU 84	No

Trave di accoppiamento 8

Verifiche condotte secondo D.M. 17-01-18 (N.T.C.)

Dati geometrici

X ini.	Y ini.	Z ini.inf.	Z ini.sup.	H ini.	X fin.	Y fin.	Z fin.inf.	Z fin.sup	H fin.	Luce	Spessore	R. Trazione

X ini.	Y ini.	Z ini.inf.	Z ini.sup.	H ini.	X fin.	Y fin.	Z fin.inf.	Z fin.sup	H fin.	Luce	Spessore	R. Trazione
-17.267	-3.292	0.73	1.32	0.59	-18.267	-3.292	0.73	1.32	0.59	1	0.45	30000

Caratteristiche del materiale

(Circolare 7 21-01-19 C8.5.I) Muratura in mattoni pieni e malta di calce LC2_Corti

fb_	fhk	fvk0	fhmedio	τ0	fv0	μ	ϕ	fvk,lim	E	G	FC
120000			172500	9000	20000	0.577	0.767	6500	320000000	128000000	1.2

Verifiche a pressoflessione delle travi in muratura in combinazioni non sismiche

Sezione	γM	N	M	Mu	Comb.	c.s.	Verifica
ini.	3	1881	-399.22	794.74	SLU 77	1.99	Si
fin.	3	3547	-45.45	794.74	SLU 77	17.49	Si
ini.	3	1964	-414.1	794.74	SLU 83	1.92	Si
fin.	3	3648	-55.61	794.74	SLU 83	14.29	Si
ini.	3	1558	-414.55	794.74	SLU 75	1.92	Si
fin.	3	2894	7.48	794.74	SLU 75	106.27	Si
ini.	3	1331	-421.37	794.74	SLU 73	1.89	Si
fin.	3	2420	41.45	794.74	SLU 73	19.17	Si
ini.	3	1648	-431.78	794.74	SLU 84	1.84	Si
fin.	3	3017	-1.64	794.74	SLU 84	484.85	Si
ini.	3	1339	-423.71	794.74	SLU 76	1.88	Si
fin.	3	2441	42.5	794.74	SLU 76	18.7	Si
ini.	3	1557	-414.27	794.74	SLU 80	1.92	Si
fin.	3	2884	7.57	794.74	SLU 80	105.04	Si
ini.	3	1956	-411.76	794.74	SLU 81	1.93	Si
fin.	3	3627	-56.66	794.74	SLU 81	14.03	Si
ini.	3	1640	-429.44	794.74	SLU 82	1.85	Si
fin.	3	2995	-2.69	794.74	SLU 82	295.83	Si
ini.	3	1566	-416.9	794.74	SLU 78	1.91	Si
fin.	3	2915	8.53	794.74	SLU 78	93.21	Si

Verifiche a taglio delle travi in muratura secondo §C8.7.1.3.1 in combinazioni non sismiche

Sezione	γM	N	M	V	Vt	Vp	Vt fess. diag.	Vt,lim	Comb.	c.s.	Verifica
ini.	3	1746	-368.9	4454			682	0	SLU 60	0	No
fin.	3	3267	-48.08	-4166			682	0	SLU 60	0	No
ini.	3	1431	-386.58	4430			682	0	SLU 61	0	No
fin.	3	2636	5.89	-4185			682	0	SLU 61	0	No
ini.	3	1129	-380.85	4213			682	0	SLU 55	0	No
fin.	3	2082	51.08	-3978			682	0	SLU 55	0	No
ini.	3	1144	-244.16	2966			682	0	SLU 1	0	No
fin.	3	2212	-18.33	-2712			682	0	SLU 1	0	No
ini.	3	1671	-356.36	4310			682	0	SLU 56	0	No
fin.	3	3187	-36.87	-3985			682	0	SLU 56	0	No
ini.	3	1347	-371.41	4256			682	0	SLU 59	0	No
fin.	3	2524	16.14	-3983			682	0	SLU 59	0	No
ini.	3	1663	-353.73	4280			682	0	SLU 58	0	No
fin.	3	3156	-37.83	-3964			682	0	SLU 58	0	No
ini.	3	1348	-371.69	4259			682	0	SLU 54	0	No
fin.	3	2535	16.06	-3987			682	0	SLU 54	0	No
ini.	3	1663	-354.01	4283			682	0	SLU 53	0	No
fin.	3	3166	-37.92	-3967			682	0	SLU 53	0	No
ini.	3	1356	-374.04	4285			682	0	SLU 57	0	No
fin.	3	2556	17.1	-4004			682	0	SLU 57	0	No

Verifiche a pressoflessione delle travi in muratura in combinazioni sismiche

Sezione	γM	N	M	Mu	Comb.	c.s.	Verifica
ini.	2	2357	1163.17	1192.11	SLV 8	1.02	Si
fin.	2	3425	-1125.89	1192.11	SLV 8	1.06	Si
ini.	2	183	-1702.44	1192.11	SLV 10	0.7	No
fin.	2	1410	1073.46	1192.11	SLV 10	1.11	Si
ini.	2	2357	1163.17	1192.11	SLV 7	1.02	Si
fin.	2	3425	-1125.89	1192.11	SLV 7	1.06	Si
ini.	2	183	-1702.44	1192.11	SLV 9	0.7	No
fin.	2	1410	1073.46	1192.11	SLV 9	1.11	Si
ini.	2	2468	-1291.93	1192.11	SLV 14	0.92	No
fin.	2	7090	866.39	1192.11	SLV 14	1.38	Si
ini.	2	72	752.65	1192.11	SLV 4	1.58	Si
fin.	2	-2255	-918.83	1192.11	SLV 4	1.3	Si
ini.	2	-822	-1311.82	1192.11	SLV 6	0.91	No
fin.	2	-1871	702.44	1192.11	SLV 6	1.7	Si
ini.	2	-822	-1311.82	1192.11	SLV 5	0.91	No
fin.	2	-1871	702.44	1192.11	SLV 5	1.7	Si
ini.	2	72	752.65	1192.11	SLV 3	1.58	Si
fin.	2	-2255	-918.83	1192.11	SLV 3	1.3	Si
ini.	2	2468	-1291.93	1192.11	SLV 13	0.92	No
fin.	2	7090	866.39	1192.11	SLV 13	1.38	Si

Verifiche a taglio delle travi in muratura secondo §C8.7.1.3.1 in combinazioni sismiche

Sezione	γM	N	M	V	Vt	Vp	Vt fess. diag.	Vt,lim	Comb.	c.s.	Verifica
ini.	2	2468	-1291.93	6083			1022	0	SLV 13	0	No
fin.	2	7090	866.39	-518			1022	0	SLV 13	0	No
ini.	2	3422	-549.44	5213			1022	0	SLV 16	0	No
fin.	2	8679	317.89	-102			1022	0	SLV 16	0	No
ini.	2	2468	-1291.93	6083			1022	0	SLV 14	0	No
fin.	2	7090	866.39	-518			1022	0	SLV 14	0	No
ini.	2	3362	772.54	2519			1022	0	SLV 11	0	No
fin.	2	6706	-754.88	-1498			1022	0	SLV 11	0	No
ini.	2	183	-1702.44	5418			1022	357	SLV 10	0.07	No
fin.	2	1410	1073.46	-2885			1022	0	SLV 10	0	No
ini.	2	2357	1163.17	1079			1022	0	SLV 8	0	No

Sezione	γM	N	M	V	Vt	Vp	Vt fess. diag.	Vt,lim	Comb.	c.s.	Verifica
fin.	2	3425	-1125.89	-3112			1022	0	SLV 8	0	No
ini.	2	3362	772.54	2519			1022	0	SLV 12	0	No
fin.	2	6706	-754.88	-1498			1022	0	SLV 12	0	No
ini.	2	2357	1163.17	1079			1022	0	SLV 7	0	No
fin.	2	3425	-1125.89	-3112			1022	0	SLV 7	0	No
ini.	2	183	-1702.44	5418			1022	357	SLV 9	0.07	No
fin.	2	1410	1073.46	-2885			1022	0	SLV 9	0	No
ini.	2	3422	-549.44	5213			1022	0	SLV 15	0	No
fin.	2	8679	317.89	-102			1022	0	SLV 15	0	No

Tabella dei coefficienti di sicurezza minimi

Stato limite	Coeff.s.	Comb.	Verifica
PF_SLV	0.7	SLV 9	No
V_SLV	0	SLV 7	No
PF_SLU	1.841	SLU 84	Si
V_SLU	0	SLU 1	No

Trave di accoppiamento 9

Verifiche condotte secondo D.M. 17-01-18 (N.T.C.)

Dati geometrici

X ini.	Y ini.	Z ini.inf.	Z ini.sup.	H ini.	X fin.	Y fin.	Z fin.inf.	Z fin.sup	H fin.	Luce	Spessore	R. Trazione
-14.292	-3.292	0.43	1.32	0.89	-16.452	-3.292	0.43	1.32	0.89	2.16	0.45	30000

Caratteristiche del materiale

(Circolare 7 21-01-19 C8.5.I) Muratura in mattoni pieni e malta di calce LC2_Corti

fb_	fhk	fvk0	fhmedio	τ0	fv0	μ	ϕ	fvk,lim	E	G	FC
120000			172500	9000	20000	0.577	0.767	6500	320000000	128000000	1.2

Verifiche a pressoflessione delle travi in muratura in combinazioni non sismiche

Sezione	γM	N	M	Mu	Comb.	c.s.	Verifica
ini.	3	1282	-1116.5	1808.43	SLU 81	1.62	Si
fin.	3	2980	-832.95	1808.43	SLU 81	2.17	Si
ini.	3	1219	-1082.07	1808.43	SLU 77	1.67	Si
fin.	3	2939	-790.07	1808.43	SLU 77	2.29	Si
ini.	3	1242	-1079.89	1808.43	SLU 75	1.67	Si
fin.	3	2907	-794.59	1808.43	SLU 75	2.28	Si
ini.	3	1319	-1134.5	1808.43	SLU 84	1.59	Si
fin.	3	2999	-841.32	1808.43	SLU 84	2.15	Si
ini.	3	1250	-1077.44	1808.43	SLU 76	1.68	Si
fin.	3	2878	-800.23	1808.43	SLU 76	2.26	Si
ini.	3	1289	-1126.59	1808.43	SLU 83	1.61	Si
fin.	3	3006	-834.88	1808.43	SLU 83	2.17	Si
ini.	3	1237	-1082.26	1808.43	SLU 80	1.67	Si
fin.	3	2909	-797.86	1808.43	SLU 80	2.27	Si
ini.	3	1208	-1074.35	1808.43	SLU 79	1.68	Si
fin.	3	2916	-791.41	1808.43	SLU 79	2.29	Si
ini.	3	1312	-1124.41	1808.43	SLU 82	1.61	Si
fin.	3	2973	-839.4	1808.43	SLU 82	2.15	Si
ini.	3	1248	-1089.97	1808.43	SLU 78	1.66	Si
fin.	3	2933	-796.51	1808.43	SLU 78	2.27	Si

Verifiche a taglio delle travi in muratura secondo §C8.7.1.3.1 in combinazioni non sismiche

Sezione	γM	N	M	V	Vt	Vp	Vt fess. diag.	Vt,lim	Comb.	c.s.	Verifica
ini.	3	1107	-979.88	2379			1028	160	SLU 55	0.07	No
fin.	3	2596	-732.3	-2987			1028	0	SLU 55	0	No
ini.	3	1139	-1018.94	2540			1028	148	SLU 60	0.06	No
fin.	3	2697	-765.03	-3180			1028	0	SLU 60	0	No
ini.	3	1105	-992.41	2407			1028	161	SLU 57	0.07	No
fin.	3	2650	-728.59	-2983			1028	0	SLU 57	0	No
ini.	3	1069	-974.42	2404			1028	173	SLU 53	0.07	No
fin.	3	2631	-720.22	-2972			1028	0	SLU 53	0	No
ini.	3	1075	-984.5	2416			1028	171	SLU 56	0.07	No
fin.	3	2657	-722.14	-2974			1028	0	SLU 56	0	No
ini.	3	1094	-984.69	2397			1028	165	SLU 59	0.07	No
fin.	3	2626	-729.93	-2982			1028	0	SLU 59	0	No
ini.	3	1098	-982.33	2395			1028	163	SLU 54	0.07	No
fin.	3	2624	-726.66	-2981			1028	0	SLU 54	0	No
ini.	3	1168	-1026.85	2531			1028	137	SLU 61	0.05	No
fin.	3	2690	-771.47	-3189			1028	0	SLU 61	0	No
ini.	3	1064	-976.78	2406			1028	174	SLU 58	0.07	No
fin.	3	2633	-723.49	-2973			1028	0	SLU 58	0	No
ini.	3	688	-649.72	1628			1028	269	SLU 1	0.17	No
fin.	3	1851	-490.01	-2002			1028	0	SLU 1	0	No

Verifiche a pressoflessione delle travi in muratura in combinazioni sismiche

Sezione	γM	N	M	Mu	Comb.	c.s.	Verifica
ini.	2	-1969	18.32	2712.65	SLV 3	148.03	Si
fin.	2	-998	-2434.78	2712.65	SLV 3	1.11	Si
ini.	2	249	-404.12	2712.65	SLV 7	6.71	Si
fin.	2	676	-1215.67	2712.65	SLV 7	2.23	Si
ini.	2	-2159	-43.51	2712.65	SLV 1	62.35	Si
fin.	2	-714	-2363.93	2712.65	SLV 1	1.15	Si
ini.	2	-2159	-43.51	2712.65	SLV 2	62.35	Si
fin.	2	-714	-2363.93	2712.65	SLV 2	1.15	Si

Sezione	γM	N	M	Mu	Comb.	c.s.	Verifica
ini.	2	3735	-1394.78	2712.65	SLV 16	1.94	Si
fin.	2	4733	1284.57	2712.65	SLV 16	2.11	Si
ini.	2	3545	-1456.62	2712.65	SLV 13	1.86	Si
fin.	2	5017	1355.42	2712.65	SLV 13	2	Si
ini.	2	3735	-1394.78	2712.65	SLV 15	1.94	Si
fin.	2	4733	1284.57	2712.65	SLV 15	2.11	Si
ini.	2	3545	-1456.62	2712.65	SLV 14	1.86	Si
fin.	2	5017	1355.42	2712.65	SLV 14	2	Si
ini.	2	249	-404.12	2712.65	SLV 8	6.71	Si
fin.	2	676	-1215.67	2712.65	SLV 8	2.23	Si
ini.	2	-1969	18.32	2712.65	SLV 4	148.03	Si
fin.	2	-998	-2434.78	2712.65	SLV 4	1.11	Si

Verifiche a taglio delle travi in muratura secondo §C8.7.1.3.1 in combinazioni sismiche

Sezione	γM	N	M	V	Vt	Vp	Vt fess. diag.	Vt,lim	Comb.	c.s.	Verifica
ini.	2	-385	-610.24	1751			1645	634	SLV 5	0.36	No
fin.	2	1623	-979.5	-3640			1542	253	SLV 5	0.07	No
ini.	2	1327	-1034.17	2712			1542	337	SLV 9	0.12	No
fin.	2	3342	136.3	-2287			1542	0	SLV 9	0	No
ini.	2	1327	-1034.17	2712			1542	337	SLV 10	0.12	No
fin.	2	3342	136.3	-2287			1542	0	SLV 10	0	No
ini.	2	3545	-1456.62	3544			1542	0	SLV 14	0	No
fin.	2	5017	1355.42	-205			1542	0	SLV 14	0	No
ini.	2	1961	-828.05	1887			1542	84	SLV 11	0.04	No
fin.	2	2396	-99.86	-846			1542	0	SLV 11	0	No
ini.	2	3735	-1394.78	3297			1542	0	SLV 15	0	No
fin.	2	4733	1284.57	227			1542	0	SLV 15	0	No
ini.	2	3735	-1394.78	3297			1542	0	SLV 16	0	No
fin.	2	4733	1284.57	227			1542	0	SLV 16	0	No
ini.	2	1961	-828.05	1887			1542	84	SLV 12	0.04	No
fin.	2	2396	-99.86	-846			1542	0	SLV 12	0	No
ini.	2	3545	-1456.62	3544			1542	0	SLV 13	0	No
fin.	2	5017	1355.42	-205			1542	0	SLV 13	0	No
ini.	2	-385	-610.24	1751			1645	634	SLV 6	0.36	No
fin.	2	1623	-979.5	-3640			1542	253	SLV 6	0.07	No

Tabella dei coefficienti di sicurezza minimi

Stato limite	Coeff.s.	Comb.	Verifica
PF_SLV	1.114	SLV 3	Si
V_SLV	0	SLV 9	No
PF_SLU	1.594	SLU 84	Si
V_SLU	0	SLU 1	No

Trave di accoppiamento 10

Verifiche condotte secondo D.M. 17-01-18 (N.T.C.)

Dati geometrici

X ini.	Y ini.	Z ini.inf.	Z ini.sup.	H ini.	X fin.	Y fin.	Z fin.inf.	Z fin.sup	H fin.	Luce	Spessore	R. Trazione
-18.635	1.032	0.43	1.32	0.89	-19.635	1.032	0.43	1.32	0.89	1	0.45	30000

Caratteristiche del materiale

(Circolare 7 21-01-19 C8.5.I) Muratura in mattoni pieni e malta di calce LC2_Corti

fb_	fhk	fvk0	fhmedio	τ0	fv0	μ	ϕ	fvk,lim	E	G	FC
120000			172500	9000	20000	0.577	0.767	6500	320000000	128000000	1.2

Verifiche a pressoflessione delle travi in muratura in combinazioni non sismiche

Sezione	γM	N	M	Mu	Comb.	c.s.	Verifica
ini.	3	-1571	1706.96	1808.43	SLU 78	1.06	Si
fin.	3	-2474	-1137.88	1808.43	SLU 78	1.59	Si
ini.	3	-1660	1632.57	1808.43	SLU 82	1.11	Si
fin.	3	-2462	-1112.93	1808.43	SLU 82	1.62	Si
ini.	3	-1559	1648.94	1808.43	SLU 75	1.1	Si
fin.	3	-2388	-1105.91	1808.43	SLU 75	1.64	Si
ini.	3	-1722	1750.06	1808.43	SLU 83	1.03	Si
fin.	3	-2562	-1176.81	1808.43	SLU 83	1.54	Si
ini.	3	-1609	1708.42	1808.43	SLU 74	1.06	Si
fin.	3	-2403	-1137.81	1808.43	SLU 74	1.59	Si
ini.	3	-1671	1690.59	1808.43	SLU 84	1.07	Si
fin.	3	-2548	-1144.91	1808.43	SLU 84	1.58	Si
ini.	3	-1572	1687.94	1808.43	SLU 80	1.07	Si
fin.	3	-2465	-1128.05	1808.43	SLU 80	1.6	Si
ini.	3	-1623	1747.42	1808.43	SLU 79	1.03	Si
fin.	3	-2480	-1159.95	1808.43	SLU 79	1.56	Si
ini.	3	-1710	1692.05	1808.43	SLU 81	1.07	Si
fin.	3	-2476	-1144.83	1808.43	SLU 81	1.58	Si
ini.	3	-1621	1766.43	1808.43	SLU 77	1.02	Si
fin.	3	-2488	-1169.79	1808.43	SLU 77	1.55	Si

Verifiche a taglio delle travi in muratura secondo §C8.7.1.3.1 in combinazioni non sismiche

Sezione	γM	N	M	V	Vt	Vp	Vt fess. diag.	Vt,lim	Comb.	c.s.	Verifica
ini.	3	-1609	1708.42	4478			1946	767	SLU 74	0.17	No
fin.	3	-2403	-1137.81	-16835			2228	864	SLU 74	0.05	No
ini.	3	-1623	1747.42	4438			1950	769	SLU 79	0.17	No
fin.	3	-2480	-1159.95	-17047			2255	873	SLU 79	0.05	No
ini.	3	-1571	1706.96	4514			1932	762	SLU 78	0.17	No

Sezione	γM	N	M	V	Vt	Vp	Vt fess. diag.	Vt,lim	Comb.	c.s.	Verifica
fin.	3	-2474	-1137.88	-17048			2253	873	SLU 78	0.05	No
ini.	3	-1572	1687.94	4502			1932	762	SLU 80	0.17	No
fin.	3	-2465	-1128.05	-16920			2250	872	SLU 80	0.05	No
ini.	3	-1722	1750.06	4762			1986	782	SLU 83	0.16	No
fin.	3	-2562	-1176.81	-17557			2285	883	SLU 83	0.05	No
ini.	3	-1559	1648.94	4542			1928	761	SLU 75	0.17	No
fin.	3	-2388	-1105.91	-16708			2223	863	SLU 75	0.05	No
ini.	3	-1710	1692.05	4790			1981	780	SLU 81	0.16	No
fin.	3	-2476	-1144.83	-17217			2254	873	SLU 81	0.05	No
ini.	3	-1621	1766.43	4450			1950	769	SLU 77	0.17	No
fin.	3	-2488	-1169.79	-17175			2259	874	SLU 77	0.05	No
ini.	3	-1671	1690.59	4826			1968	775	SLU 84	0.16	No
fin.	3	-2548	-1144.91	-17430			2280	881	SLU 84	0.05	No
ini.	3	-1660	1632.57	4854			1964	774	SLU 82	0.16	No
fin.	3	-2462	-1112.93	-17090			2249	871	SLU 82	0.05	No

Verifiche a pressoflessione delle travi in muratura in combinazioni sismiche

Sezione	γM	N	M	Mu	Comb.	c.s.	Verifica
ini.	2	-3575	2739.96	2712.65	SLV 1	0.99	No
fin.	2	-8426	-1620.44	2712.65	SLV 1	1.67	Si
ini.	2	1609	-1522.6	2712.65	SLV 13	1.78	Si
fin.	2	5884	843.91	2712.65	SLV 13	3.21	Si
ini.	2	-562	2315.35	2712.65	SLV 12	1.17	Si
fin.	2	-200	-1640.47	2712.65	SLV 12	1.65	Si
ini.	2	-3740	3822.75	2712.65	SLV 3	0.71	No
fin.	2	-8922	-2368.99	2712.65	SLV 3	1.15	Si
ini.	2	-3575	2739.96	2712.65	SLV 2	0.99	No
fin.	2	-8426	-1620.44	2712.65	SLV 2	1.67	Si
ini.	2	1609	-1522.6	2712.65	SLV 14	1.78	Si
fin.	2	5884	843.91	2712.65	SLV 14	3.21	Si
ini.	2	-2117	3594.12	2712.65	SLV 7	0.75	No
fin.	2	-4493	-2379.77	2712.65	SLV 7	1.14	Si
ini.	2	-562	2315.35	2712.65	SLV 11	1.17	Si
fin.	2	-200	-1640.47	2712.65	SLV 11	1.65	Si
ini.	2	-2117	3594.12	2712.65	SLV 8	0.75	No
fin.	2	-4493	-2379.77	2712.65	SLV 8	1.14	Si
ini.	2	-3740	3822.75	2712.65	SLV 4	0.71	No
fin.	2	-8922	-2368.99	2712.65	SLV 4	1.15	Si

Verifiche a taglio delle travi in muratura secondo §C8.7.1.3.1 in combinazioni sismiche

Sezione	γM	N	M	V	Vt	Vp	Vt fess. diag.	Vt,lim	Comb.	c.s.	Verifica
ini.	2	-1569	-15.19	3091			2617	1035	SLV 6	0.33	No
fin.	2	-2838	115.39	-17527			3069	1205	SLV 6	0.07	No
ini.	2	-13	-1293.96	6625			2064	777	SLV 9	0.12	No
fin.	2	1455	854.69	-13038			2059	405	SLV 9	0.03	No
ini.	2	1445	-439.81	8339			2059	409	SLV 16	0.05	No
fin.	2	5388	95.36	-2522			2059	0	SLV 16	0	No
ini.	2	1609	-1522.6	9451			2059	343	SLV 14	0.04	No
fin.	2	5884	843.91	-4958			2059	0	SLV 14	0	No
ini.	2	-3575	2739.96	-2329			3332	1293	SLV 1	0.56	No
fin.	2	-8426	-1620.44	-19921			5059	1768	SLV 1	0.09	No
ini.	2	-3575	2739.96	-2329			3332	1293	SLV 2	0.56	No
fin.	2	-8426	-1620.44	-19921			5059	1768	SLV 2	0.09	No
ini.	2	1445	-439.81	8339			2059	409	SLV 15	0.05	No
fin.	2	5388	95.36	-2522			2059	0	SLV 15	0	No
ini.	2	-13	-1293.96	6625			2064	777	SLV 10	0.12	No
fin.	2	1455	854.69	-13038			2059	405	SLV 10	0.03	No
ini.	2	1609	-1522.6	9451			2059	343	SLV 13	0.04	No
fin.	2	5884	843.91	-4958			2059	0	SLV 13	0	No
ini.	2	-1569	-15.19	3091			2617	1035	SLV 5	0.33	No
fin.	2	-2838	115.39	-17527			3069	1205	SLV 5	0.07	No

Tabella dei coefficienti di sicurezza minimi

Stato limite	Coeff.s.	Comb.	Verifica
PF_SLV	0.71	SLV 3	No
V_SLV	0	SLV 13	No
PF_SLU	1.024	SLU 77	Si
V_SLU	0.05	SLU 83	No

Trave di accoppiamento 11

Verifiche condotte secondo D.M. 17-01-18 (N.T.C.)

Dati geometrici

X ini.	Y ini.	Z ini.inf.	Z ini.sup.	H ini.	X fin.	Y fin.	Z fin.inf.	Z fin.sup	H fin.	Luce	Spessore	R. Trazione
-14.135	1.032	0.43	1.32	0.89	-15.135	1.032	0.43	1.32	0.89	1	0.45	30000

Caratteristiche del materiale

(Circolare 7 21-01-19 C8.5.I) Muratura in mattoni pieni e malta di calce LC2_Corti

fb_	fhk	fvk0	fhmedio	τ0	fv0	μ	ϕ	fvk,lim	E	G	FC
120000			172500	9000	20000	0.577	0.767	6500	320000000	128000000	1.2

Verifiche a pressoflessione delle travi in muratura in combinazioni non sismiche

Sezione	γM	N	M	Mu	Comb.	c.s.	Verifica
ini.	3	-2784	628.21	1808.43	SLU 82	2.88	Si
fin.	3	-2594	-1980.49	1808.43	SLU 82	0.91	No

Sezione	γM	N	M	Mu	Comb.	c.s.	Verifica
ini.	3	-2625	624.94	1808.43	SLU 79	2.89	Si
fin.	3	-2509	-1996.27	1808.43	SLU 79	0.91	No
ini.	3	-2626	648.1	1808.43	SLU 80	2.79	Si
fin.	3	-2564	-2007.66	1808.43	SLU 80	0.9	No
ini.	3	-2633	644.44	1808.43	SLU 76	2.81	Si
fin.	3	-2539	-1959.66	1808.43	SLU 76	0.92	No
ini.	3	-2783	605.05	1808.43	SLU 81	2.99	Si
fin.	3	-2539	-1969.1	1808.43	SLU 81	0.92	No
ini.	3	-2778	647.31	1808.43	SLU 84	2.79	Si
fin.	3	-2655	-2036.09	1808.43	SLU 84	0.89	No
ini.	3	-2625	656.24	1808.43	SLU 78	2.76	Si
fin.	3	-2561	-2024.89	1808.43	SLU 78	0.89	No
ini.	3	-2624	633.08	1808.43	SLU 77	2.86	Si
fin.	3	-2506	-2013.5	1808.43	SLU 77	0.9	No
ini.	3	-2777	624.15	1808.43	SLU 83	2.9	Si
fin.	3	-2600	-2024.7	1808.43	SLU 83	0.89	No
ini.	3	-2631	637.15	1808.43	SLU 75	2.84	Si
fin.	3	-2500	-1969.29	1808.43	SLU 75	0.92	No

Verifiche a taglio delle travi in muratura secondo §C8.7.1.3.1 in combinazioni non sismiche

Sezione	γM	N	M	V	Vt	Vp	Vt fess. diag.	Vt,lim	Comb.	c.s.	Verifica
ini.	3	-2624	633.08	4320			2307	890	SLU 77	0.21	No
fin.	3	-2506	-2013.5	-13156			2265	876	SLU 77	0.07	No
ini.	3	-2625	656.24	4253			2307	890	SLU 78	0.21	No
fin.	3	-2561	-2024.89	-13197			2284	882	SLU 78	0.07	No
ini.	3	-2630	613.99	4345			2309	890	SLU 74	0.2	No
fin.	3	-2445	-1957.9	-12896			2243	869	SLU 74	0.07	No
ini.	3	-2784	628.21	4598			2364	907	SLU 82	0.2	No
fin.	3	-2594	-1980.49	-13241			2296	886	SLU 82	0.07	No
ini.	3	-2777	624.15	4640			2361	907	SLU 83	0.2	No
fin.	3	-2600	-2024.7	-13460			2298	887	SLU 83	0.07	No
ini.	3	-2625	624.94	4303			2307	890	SLU 79	0.21	No
fin.	3	-2509	-1996.27	-13057			2266	877	SLU 79	0.07	No
ini.	3	-2626	648.1	4236			2308	890	SLU 80	0.21	No
fin.	3	-2564	-2007.66	-13097			2285	883	SLU 80	0.07	No
ini.	3	-2631	637.15	4278			2309	890	SLU 75	0.21	No
fin.	3	-2500	-1969.29	-12937			2263	876	SLU 75	0.07	No
ini.	3	-2778	647.31	4573			2362	907	SLU 84	0.2	No
fin.	3	-2655	-2036.09	-13500			2318	893	SLU 84	0.07	No
ini.	3	-2783	605.05	4665			2364	907	SLU 81	0.19	No
fin.	3	-2539	-1969.1	-13200			2277	880	SLU 81	0.07	No

Verifiche a pressoflessione delle travi in muratura in combinazioni sismiche

Sezione	γM	N	M	Mu	Comb.	c.s.	Verifica
ini.	2	-3602	1605.44	2712.65	SLV 1	1.69	Si
fin.	2	-4581	-3652.13	2712.65	SLV 1	0.74	No
ini.	2	-6595	1072.86	2712.65	SLV 10	2.53	Si
fin.	2	7111	-801.71	2712.65	SLV 10	3.38	Si
ini.	2	-3602	1605.44	2712.65	SLV 2	1.69	Si
fin.	2	-4581	-3652.13	2712.65	SLV 2	0.74	No
ini.	2	-6595	1072.86	2712.65	SLV 9	2.53	Si
fin.	2	7111	-801.71	2712.65	SLV 9	3.38	Si
ini.	2	-6794	1618.3	2712.65	SLV 5	1.68	Si
fin.	2	4033	-2173.7	2712.65	SLV 5	1.25	Si
ini.	2	2990	-236.58	2712.65	SLV 8	11.47	Si
fin.	2	-10321	-1824.48	2712.65	SLV 8	1.49	Si
ini.	2	-6794	1618.3	2712.65	SLV 6	1.68	Si
fin.	2	4033	-2173.7	2712.65	SLV 6	1.25	Si
ini.	2	-667	1048.98	2712.65	SLV 4	2.59	Si
fin.	2	-8887	-3547.36	2712.65	SLV 4	0.76	No
ini.	2	2990	-236.58	2712.65	SLV 7	11.47	Si
fin.	2	-10321	-1824.48	2712.65	SLV 7	1.49	Si
ini.	2	-667	1048.98	2712.65	SLV 3	2.59	Si
fin.	2	-8887	-3547.36	2712.65	SLV 3	0.76	No

Verifiche a taglio delle travi in muratura secondo §C8.7.1.3.1 in combinazioni sismiche

Sezione	γM	N	M	V	Vt	Vp	Vt fess. diag.	Vt,lim	Comb.	c.s.	Verifica
ini.	2	-6794	1618.3	4998			4478	1624	SLV 6	0.32	No
fin.	2	4033	-2173.7	-4162			2059	0	SLV 6	0	No
ini.	2	-6794	1618.3	4998			4478	1624	SLV 5	0.32	No
fin.	2	4033	-2173.7	-4162			2059	0	SLV 5	0	No
ini.	2	-2938	-212.7	9840			3105	1217	SLV 13	0.12	No
fin.	2	5678	921.17	-1143			2059	0	SLV 13	0	No
ini.	2	2990	-236.58	-2739			2059	0	SLV 8	0	No
fin.	2	-10321	-1824.48	-16378			5733	1922	SLV 8	0.12	No
ini.	2	2990	-236.58	-2739			2059	0	SLV 7	0	No
fin.	2	-10321	-1824.48	-16378			5733	1922	SLV 7	0.12	No
ini.	2	-6595	1072.86	8482			4407	1606	SLV 10	0.19	No
fin.	2	7111	-801.71	-795			2059	0	SLV 10	0	No
ini.	2	3189	-782.02	746			2059	0	SLV 11	0	No
fin.	2	-7243	-452.49	-13011			4638	1665	SLV 11	0.13	No
ini.	2	-6595	1072.86	8482			4407	1606	SLV 9	0.19	No
fin.	2	7111	-801.71	-795			2059	0	SLV 9	0	No
ini.	2	3189	-782.02	746			2059	0	SLV 12	0	No
fin.	2	-7243	-452.49	-13011			4638	1665	SLV 12	0.13	No
ini.	2	-2938	-212.7	9840			3105	1217	SLV 14	0.12	No
fin.	2	5678	921.17	-1143			2059	0	SLV 14	0	No

Tabella dei coefficienti di sicurezza minimi

Stato limite	Coeff.s.	Comb.	Verifica
PF_SLV	0.743	SLV 1	No
V_SLV	0	SLV 5	No
PF_SLU	0.888	SLU 84	No
V_SLU	0.066	SLU 83	No

Trave di accoppiamento 12

Verifiche condotte secondo D.M. 17-01-18 (N.T.C.)

Dati geometrici

X ini.	Y ini.	Z ini.inf.	Z ini.sup.	H ini.	X fin.	Y fin.	Z fin.inf.	Z fin.sup	H fin.	Luce	Spessore	R. Trazione
-12.535	1.032	0.49	1.32	0.83	-13.505	1.032	0.49	1.32	0.83	0.97	0.45	30000

Caratteristiche del materiale

(Circolare 7 21-01-19 C8.5.I) Muratura in mattoni pieni e malta di calce LC2_Corti

fb_	fhk	fvk0	fhmedio	τ0	fv0	μ	ϕ	fvk,lim	E	G	FC
120000			172500	9000	20000	0.577	0.767	6500	320000000	128000000	1.2

Verifiche a pressoflessione delle travi in muratura in combinazioni non sismiche

Sezione	γM	N	M	Mu	Comb.	c.s.	Verifica
ini.	3	-6198	-1692.49	1572.82	SLU 83	0.93	No
fin.	3	-4231	550.64	1572.82	SLU 83	2.86	Si
ini.	3	-5961	-1644.97	1572.82	SLU 79	0.96	No
fin.	3	-4089	537.01	1572.82	SLU 79	2.93	Si
ini.	3	-5992	-1658.35	1572.82	SLU 77	0.95	No
fin.	3	-4114	541.57	1572.82	SLU 77	2.9	Si
ini.	3	-5923	-1657.23	1572.82	SLU 80	0.95	No
fin.	3	-4096	543.62	1572.82	SLU 80	2.89	Si
ini.	3	-5918	-1638.43	1572.82	SLU 75	0.96	No
fin.	3	-4086	542.58	1572.82	SLU 75	2.9	Si
ini.	3	-5862	-1633.22	1572.82	SLU 76	0.96	No
fin.	3	-4065	542.42	1572.82	SLU 76	2.9	Si
ini.	3	-5954	-1670.62	1572.82	SLU 78	0.94	No
fin.	3	-4121	548.18	1572.82	SLU 78	2.87	Si
ini.	3	-6159	-1704.76	1572.82	SLU 84	0.92	No
fin.	3	-4238	557.24	1572.82	SLU 84	2.82	Si
ini.	3	-6124	-1672.57	1572.82	SLU 82	0.94	No
fin.	3	-4203	551.64	1572.82	SLU 82	2.85	Si
ini.	3	-6162	-1660.3	1572.82	SLU 81	0.95	No
fin.	3	-4195	545.04	1572.82	SLU 81	2.89	Si

Verifiche a taglio delle travi in muratura secondo §C8.7.1.3.1 in combinazioni non sismiche

Sezione	γM	N	M	V	Vt	Vp	Vt fess. diag.	Vt,lim	Comb.	c.s.	Verifica
ini.	3	-5992	-1658.35	7651			3282	1117	SLU 77	0.15	No
fin.	3	-4114	541.57	2446			2639	961	SLU 77	0.39	No
ini.	3	-5862	-1633.22	7508			3237	1107	SLU 76	0.15	No
fin.	3	-4065	542.42	2398			2622	957	SLU 76	0.4	No
ini.	3	-5954	-1670.62	7664			3268	1114	SLU 78	0.15	No
fin.	3	-4121	548.18	2464			2641	962	SLU 78	0.39	No
ini.	3	-6124	-1672.57	7750			3327	1127	SLU 82	0.15	No
fin.	3	-4203	551.64	2413			2669	969	SLU 82	0.4	No
ini.	3	-6162	-1660.3	7736			3340	1130	SLU 81	0.15	No
fin.	3	-4195	545.04	2395			2667	968	SLU 81	0.4	No
ini.	3	-6198	-1692.49	7837			3352	1132	SLU 83	0.14	No
fin.	3	-4231	550.64	2444			2679	971	SLU 83	0.4	No
ini.	3	-5961	-1644.97	7586			3271	1114	SLU 79	0.15	No
fin.	3	-4089	537.01	2417			2630	959	SLU 79	0.4	No
ini.	3	-5918	-1638.43	7564			3256	1111	SLU 75	0.15	No
fin.	3	-4086	542.58	2415			2629	958	SLU 75	0.4	No
ini.	3	-5923	-1657.23	7600			3258	1111	SLU 80	0.15	No
fin.	3	-4096	543.62	2435			2633	959	SLU 80	0.39	No
ini.	3	-6159	-1704.76	7851			3339	1130	SLU 84	0.14	No
fin.	3	-4238	557.24	2462			2681	972	SLU 84	0.39	No

Verifiche a pressoflessione delle travi in muratura in combinazioni sismiche

Sezione	γM	N	M	Mu	Comb.	c.s.	Verifica
ini.	2	-213	-1161.98	2359.23	SLV 8	2.03	Si
fin.	2	2291	-626.13	2359.23	SLV 8	3.77	Si
ini.	2	-6022	-1222.08	2359.23	SLV 6	1.93	Si
fin.	2	-6737	1127.82	2359.23	SLV 6	2.09	Si
ini.	2	-7969	-1011.9	2359.23	SLV 9	2.33	Si
fin.	2	-7893	1370.92	2359.23	SLV 9	1.72	Si
ini.	2	-6022	-1222.08	2359.23	SLV 5	1.93	Si
fin.	2	-6737	1127.82	2359.23	SLV 5	2.09	Si
ini.	2	25	-1428.22	2359.23	SLV 3	1.65	Si
fin.	2	481	-295.86	2359.23	SLV 3	7.97	Si
ini.	2	-1718	-1446.25	2359.23	SLV 1	1.63	Si
fin.	2	-2228	230.33	2359.23	SLV 1	10.24	Si
ini.	2	-1718	-1446.25	2359.23	SLV 2	1.63	Si
fin.	2	-2228	230.33	2359.23	SLV 2	10.24	Si
ini.	2	25	-1428.22	2359.23	SLV 4	1.65	Si
fin.	2	481	-295.86	2359.23	SLV 4	7.97	Si
ini.	2	-7969	-1011.9	2359.23	SLV 10	2.33	Si
fin.	2	-7893	1370.92	2359.23	SLV 10	1.72	Si
ini.	2	-213	-1161.98	2359.23	SLV 7	2.03	Si

Sezione	γM	N	M	Mu	Comb.	c.s.	Verifica
fin.	2	2291	-626.13	2359.23	SLV 7	3.77	Si

Verifiche a taglio delle travi in muratura secondo §C8.7.1.3.1 in combinazioni sismiche

Sezione	γM	N	M	V	Vt	Vp	Vt fess. diag.	Vt,lim	Comb.	c.s.	Verifica
ini.	2	-6463	-727.63	8638			4058	1467	SLV 15	0.17	No
fin.	2	-3374	514.46	2698			3001	1164	SLV 15	0.43	No
ini.	2	-213	-1161.98	5304			1919	733	SLV 7	0.14	No
fin.	2	2291	-626.13	1558			1846	0	SLV 7	0	No
ini.	2	-213	-1161.98	5304			1919	733	SLV 8	0.14	No
fin.	2	2291	-626.13	1558			1846	0	SLV 8	0	No
ini.	2	-6463	-727.63	8638			4058	1467	SLV 16	0.17	No
fin.	2	-3374	514.46	2698			3001	1164	SLV 16	0.43	No
ini.	2	25	-1428.22	2281			1846	690	SLV 4	0.3	No
fin.	2	481	-295.86	722			1846	599	SLV 4	0.83	No
ini.	2	-8206	-745.66	7954			4655	1614	SLV 14	0.2	No
fin.	2	-6082	1040.65	2574			3928	1433	SLV 14	0.56	No
ini.	2	-2159	-951.8	7211			2585	1020	SLV 12	0.14	No
fin.	2	1135	-383.03	2151			1846	435	SLV 12	0.2	No
ini.	2	-2159	-951.8	7211			2585	1020	SLV 11	0.14	No
fin.	2	1135	-383.03	2151			1846	435	SLV 11	0.2	No
ini.	2	-8206	-745.66	7954			4655	1614	SLV 13	0.2	No
fin.	2	-6082	1040.65	2574			3928	1433	SLV 13	0.56	No
ini.	2	25	-1428.22	2281			1846	690	SLV 3	0.3	No
fin.	2	481	-295.86	722			1846	599	SLV 3	0.83	No

Tabella dei coefficienti di sicurezza minimi

Stato limite	Coeff.s.	Comb.	Verifica
PF_SLV	1.631	SLV 1	Si
V_SLV	0	SLV 7	No
PF_SLU	0.923	SLU 84	No
V_SLU	0.144	SLU 84	No

Trave di accoppiamento 13

Verifiche condotte secondo D.M. 17-01-18 (N.T.C.)

Dati geometrici

X ini.	Y ini.	Z ini.inf.	Z ini.sup.	H ini.	X fin.	Y fin.	Z fin.inf.	Z fin.sup	H fin.	Luce	Spessore	R. Trazione
-11.235	1.032	0.49	1.32	0.83	-12.235	1.032	0.49	1.32	0.83	1	0.45	30000

Caratteristiche del materiale

(Circolare 7 21-01-19 C8.5.I) Muratura in mattoni pieni e malta di calce LC2_Corti

fb_	fhk	fvk0	fhmedio	τ0	fv0	μ	ϕ	fvk,lim	E	G	FC
120000			172500	9000	20000	0.577	0.767	6500	320000000	128000000	1.2

Verifiche a pressoflessione delle travi in muratura in combinazioni non sismiche

Sezione	γM	N	M	Mu	Comb.	c.s.	Verifica
ini.	3	-4579	-328.94	1572.82	SLU 77	4.78	Si
fin.	3	-4037	-1028.1	1572.82	SLU 77	1.53	Si
ini.	3	-4761	-346.1	1572.82	SLU 84	4.54	Si
fin.	3	-4148	-1059.73	1572.82	SLU 84	1.48	Si
ini.	3	-4545	-311.39	1572.82	SLU 80	5.05	Si
fin.	3	-3978	-1027.94	1572.82	SLU 80	1.53	Si
ini.	3	-4570	-327.54	1572.82	SLU 75	4.8	Si
fin.	3	-3986	-1020.63	1572.82	SLU 75	1.54	Si
ini.	3	-4539	-314.89	1572.82	SLU 76	4.99	Si
fin.	3	-3941	-1017.16	1572.82	SLU 76	1.55	Si
ini.	3	-4771	-360.81	1572.82	SLU 83	4.36	Si
fin.	3	-4192	-1049.8	1572.82	SLU 83	1.5	Si
ini.	3	-4761	-359.42	1572.82	SLU 82	4.38	Si
fin.	3	-4140	-1042.33	1572.82	SLU 82	1.51	Si
ini.	3	-4771	-374.12	1572.82	SLU 81	4.2	Si
fin.	3	-4184	-1032.41	1572.82	SLU 81	1.52	Si
ini.	3	-4555	-326.09	1572.82	SLU 79	4.82	Si
fin.	3	-4021	-1018.01	1572.82	SLU 79	1.54	Si
ini.	3	-4570	-314.23	1572.82	SLU 78	5.01	Si
fin.	3	-3994	-1038.02	1572.82	SLU 78	1.52	Si

Verifiche a taglio delle travi in muratura secondo §C8.7.1.3.1 in combinazioni non sismiche

Sezione	γM	N	M	V	Vt	Vp	Vt fess. diag.	Vt,lim	Comb.	c.s.	Verifica
ini.	3	-4771	-374.12	3242			2778	988	SLU 81	0.3	No
fin.	3	-4184	-1032.41	-3894			2583	938	SLU 81	0.24	No
ini.	3	-4539	-314.89	3033			2701	968	SLU 76	0.32	No
fin.	3	-3941	-1017.16	-3792			2502	917	SLU 76	0.24	No
ini.	3	-4570	-314.23	3096			2711	971	SLU 78	0.31	No
fin.	3	-3994	-1038.02	-3896			2520	922	SLU 78	0.24	No
ini.	3	-4570	-327.54	3071			2711	971	SLU 75	0.32	No
fin.	3	-3986	-1020.63	-3808			2517	921	SLU 75	0.24	No
ini.	3	-4771	-360.81	3267			2778	988	SLU 83	0.3	No
fin.	3	-4192	-1049.8	-3981			2585	939	SLU 83	0.24	No
ini.	3	-4555	-326.09	3107			2706	970	SLU 79	0.31	No
fin.	3	-4021	-1018.01	-3864			2529	924	SLU 79	0.24	No
ini.	3	-4545	-311.39	3077			2703	969	SLU 80	0.31	No
fin.	3	-3978	-1027.94	-3873			2514	920	SLU 80	0.24	No
ini.	3	-4579	-328.94	3126			2714	972	SLU 77	0.31	No
fin.	3	-4037	-1028.1	-3886			2534	925	SLU 77	0.24	No

Sezione	γM	N	M	V	Vt	Vp	Vt fess. diag.	Vt,lim	Comb.	c.s.	Verifica
ini.	3	-4761	-359.42	3212			2775	987	SLU 82	0.31	No
fin.	3	-4140	-1042.33	-3903			2568	934	SLU 82	0.24	No
ini.	3	-4761	-346.1	3237			2775	987	SLU 84	0.3	No
fin.	3	-4148	-1059.73	-3991			2571	935	SLU 84	0.23	No

Verifiche a pressoflessione delle travi in muratura in combinazioni sismiche

Sezione	γM	N	M	Mu	Comb.	c.s.	Verifica
ini.	2	1428	1426.42	2359.23	SLV 1	1.65	Si
fin.	2	-793	-320.36	2359.23	SLV 1	7.36	Si
ini.	2	2597	1425.67	2359.23	SLV 3	1.65	Si
fin.	2	808	-391.62	2359.23	SLV 3	6.02	Si
ini.	2	-2762	-739.98	2359.23	SLV 11	3.19	Si
fin.	2	-960	-891.63	2359.23	SLV 11	2.65	Si
ini.	2	-8914	-1904	2359.23	SLV 14	1.24	Si
fin.	2	-6389	-961.7	2359.23	SLV 14	2.45	Si
ini.	2	-2762	-739.98	2359.23	SLV 12	3.19	Si
fin.	2	-960	-891.63	2359.23	SLV 12	2.65	Si
ini.	2	-7745	-1904.75	2359.23	SLV 16	1.24	Si
fin.	2	-4787	-1032.96	2359.23	SLV 16	2.28	Si
ini.	2	1428	1426.42	2359.23	SLV 2	1.65	Si
fin.	2	-793	-320.36	2359.23	SLV 2	7.36	Si
ini.	2	-7745	-1904.75	2359.23	SLV 15	1.24	Si
fin.	2	-4787	-1032.96	2359.23	SLV 15	2.28	Si
ini.	2	-8914	-1904	2359.23	SLV 13	1.24	Si
fin.	2	-6389	-961.7	2359.23	SLV 13	2.45	Si
ini.	2	2597	1425.67	2359.23	SLV 4	1.65	Si
fin.	2	808	-391.62	2359.23	SLV 4	6.02	Si

Verifiche a taglio delle travi in muratura secondo §C8.7.1.3.1 in combinazioni sismiche

Sezione	γM	N	M	V	Vt	Vp	Vt fess. diag.	Vt,lim	Comb.	c.s.	Verifica
ini.	2	-3555	261.65	1886			2971	1148	SLV 6	0.61	No
fin.	2	-4620	-461.69	-4051			3325	1256	SLV 6	0.31	No
ini.	2	1428	1426.42	485			1791	327	SLV 1	0.67	No
fin.	2	-793	-320.36	-5996			2054	804	SLV 1	0.13	No
ini.	2	-7745	-1904.75	3661			4362	1529	SLV 16	0.42	No
fin.	2	-4787	-1032.96	966			3380	1272	SLV 16	1.32	Si
ini.	2	341	259.15	1250			1791	609	SLV 8	0.49	No
fin.	2	718	-699.23	-2969			1791	529	SLV 8	0.18	No
ini.	2	-3555	261.65	1886			2971	1148	SLV 5	0.61	No
fin.	2	-4620	-461.69	-4051			3325	1256	SLV 5	0.31	No
ini.	2	1428	1426.42	485			1791	327	SLV 2	0.67	No
fin.	2	-793	-320.36	-5996			2054	804	SLV 2	0.13	No
ini.	2	341	259.15	1250			1791	609	SLV 7	0.49	No
fin.	2	718	-699.23	-2969			1791	529	SLV 7	0.18	No
ini.	2	2597	1425.67	294			1791	0	SLV 4	0	No
fin.	2	808	-391.62	-5671			1791	508	SLV 4	0.09	No
ini.	2	2597	1425.67	294			1791	0	SLV 3	0	No
fin.	2	808	-391.62	-5671			1791	508	SLV 3	0.09	No
ini.	2	-7745	-1904.75	3661			4362	1529	SLV 15	0.42	No
fin.	2	-4787	-1032.96	966			3380	1272	SLV 15	1.32	Si

Tabella dei coefficienti di sicurezza minimi

Stato limite	Coeff.s.	Comb.	Verifica
PF_SLV	1.239	SLV 15	Si
V_SLV	0	SLV 3	No
PF_SLU	1.484	SLU 84	Si
V_SLU	0.234	SLU 84	No

Trave di accoppiamento 14

Verifiche condotte secondo D.M. 17-01-18 (N.T.C.)

Dati geometrici

X ini.	Y ini.	Z ini.inf.	Z ini.sup.	H ini.	X fin.	Y fin.	Z fin.inf.	Z fin.sup	H fin.	Luce	Spessore	R. Trazione
-5.135	1.032	0.43	1.32	0.89	-6.135	1.032	0.43	1.32	0.89	1	0.45	30000

Caratteristiche del materiale

(Circolare 7 21-01-19 C8.5.I) Muratura in mattoni pieni e malta di calce LC2_Corti

fb_	fhk	fvk0	fhmedio	τ0	fv0	μ	ϕ	fvk,lim	E	G	FC
120000			172500	9000	20000	0.577	0.767	6500	320000000	128000000	1.2

Verifiche a pressoflessione delle travi in muratura in combinazioni non sismiche

Sezione	γM	N	M	Mu	Comb.	c.s.	Verifica
ini.	3	-3685	-1012.04	1808.43	SLU 82	1.79	Si
fin.	3	-2198	1994.99	1808.43	SLU 82	0.91	No
ini.	3	-3780	-1070.19	1808.43	SLU 83	1.69	Si
fin.	3	-2315	2115.81	1808.43	SLU 83	0.85	No
ini.	3	-3770	-1059.44	1808.43	SLU 81	1.71	Si
fin.	3	-2312	2078.28	1808.43	SLU 81	0.87	No
ini.	3	-3514	-978.33	1808.43	SLU 80	1.85	Si
fin.	3	-2083	1978.71	1808.43	SLU 80	0.91	No
ini.	3	-3622	-1024.26	1808.43	SLU 74	1.77	Si
fin.	3	-2200	2049.01	1808.43	SLU 74	0.88	No
ini.	3	-3538	-976.86	1808.43	SLU 75	1.85	Si
fin.	3	-2085	1965.72	1808.43	SLU 75	0.92	No
ini.	3	-3599	-1025.73	1808.43	SLU 79	1.76	Si

Sezione	γM	N	M	Mu	Comb.	c.s.	Verifica
fin.	3	-2198	2062	1808.43	SLU 79	0.88	No
ini.	3	-3696	-1022.79	1808.43	SLU 84	1.77	Si
fin.	3	-2200	2032.52	1808.43	SLU 84	0.89	No
ini.	3	-3633	-1035	1808.43	SLU 77	1.75	Si
fin.	3	-2202	2086.54	1808.43	SLU 77	0.87	No
ini.	3	-3548	-987.6	1808.43	SLU 78	1.83	Si
fin.	3	-2088	2003.25	1808.43	SLU 78	0.9	No

Verifiche a taglio delle travi in muratura secondo §C8.7.1.3.1 in combinazioni non sismiche

Sezione	γM	N	M	V	Vt	Vp	Vt fess. diag.	Vt,lim	Comb.	c.s.	Verifica
ini.	3	-3770	-1059.44	17461			2715	1010	SLU 81	0.06	No
fin.	3	-2312	2078.28	-1754			2196	854	SLU 81	0.49	No
ini.	3	-3622	-1024.26	16963			2662	995	SLU 74	0.06	No
fin.	3	-2200	2049.01	-1603			2156	841	SLU 74	0.52	No
ini.	3	-3696	-1022.79	17558			2688	1003	SLU 84	0.06	No
fin.	3	-2200	2032.52	-1889			2156	841	SLU 84	0.45	No
ini.	3	-3599	-1025.73	17076			2654	993	SLU 79	0.06	No
fin.	3	-2198	2062	-1634			2155	840	SLU 79	0.51	No
ini.	3	-3685	-1012.04	17299			2685	1002	SLU 82	0.06	No
fin.	3	-2198	1994.99	-1878			2155	840	SLU 82	0.45	No
ini.	3	-3633	-1035	17223			2666	997	SLU 77	0.06	No
fin.	3	-2202	2086.54	-1613			2157	841	SLU 77	0.52	No
ini.	3	-3548	-987.6	17060			2636	988	SLU 78	0.06	No
fin.	3	-2088	2003.25	-1738			2116	827	SLU 78	0.48	No
ini.	3	-3514	-978.33	16914			2624	985	SLU 80	0.06	No
fin.	3	-2083	1978.71	-1759			2114	827	SLU 80	0.47	No
ini.	3	-3538	-976.86	16801			2632	987	SLU 75	0.06	No
fin.	3	-2085	1965.72	-1728			2115	827	SLU 75	0.48	No
ini.	3	-3780	-1070.19	17720			2719	1011	SLU 83	0.06	No
fin.	3	-2315	2115.81	-1764			2197	854	SLU 83	0.48	No

Verifiche a pressoflessione delle travi in muratura in combinazioni sismiche

Sezione	γM	N	M	Mu	Comb.	c.s.	Verifica
ini.	2	-9281	-1718.63	2712.65	SLV 16	1.58	Si
fin.	2	-1791	3694.86	2712.65	SLV 16	0.73	No
ini.	2	776	535.37	2712.65	SLV 5	5.07	Si
fin.	2	-2846	-1272.68	2712.65	SLV 5	2.13	Si
ini.	2	-8502	-1118.65	2712.65	SLV 13	2.42	Si
fin.	2	-2732	2405.82	2712.65	SLV 13	1.13	Si
ini.	2	-1821	-1464.58	2712.65	SLV 8	1.85	Si
fin.	2	291	3024.12	2712.65	SLV 8	0.9	No
ini.	2	-5683	-1904.9	2712.65	SLV 12	1.42	Si
fin.	2	-163	4027.79	2712.65	SLV 12	0.67	No
ini.	2	-9281	-1718.63	2712.65	SLV 15	1.58	Si
fin.	2	-1791	3694.86	2712.65	SLV 15	0.73	No
ini.	2	-5683	-1904.9	2712.65	SLV 11	1.42	Si
fin.	2	-163	4027.79	2712.65	SLV 11	0.67	No
ini.	2	-1821	-1464.58	2712.65	SLV 7	1.85	Si
fin.	2	291	3024.12	2712.65	SLV 7	0.9	No
ini.	2	776	535.37	2712.65	SLV 6	5.07	Si
fin.	2	-2846	-1272.68	2712.65	SLV 6	2.13	Si
ini.	2	-8502	-1118.65	2712.65	SLV 14	2.42	Si
fin.	2	-2732	2405.82	2712.65	SLV 14	1.13	Si

Verifiche a taglio delle travi in muratura secondo §C8.7.1.3.1 in combinazioni sismiche

Sezione	γM	N	M	V	Vt	Vp	Vt fess. diag.	Vt,lim	Comb.	c.s.	Verifica
ini.	2	-3087	95.04	13483			3158	1235	SLV 9	0.09	No
fin.	2	-3300	-269.01	-3236			3234	1261	SLV 9	0.39	No
ini.	2	776	535.37	8899			2059	606	SLV 5	0.07	No
fin.	2	-2846	-1272.68	-6345			3072	1206	SLV 5	0.19	No
ini.	2	776	535.37	8899			2059	606	SLV 6	0.07	No
fin.	2	-2846	-1272.68	-6345			3072	1206	SLV 6	0.19	No
ini.	2	3594	-250.89	3684			2059	0	SLV 3	0	No
fin.	2	-277	349.29	-5088			2158	827	SLV 3	0.16	No
ini.	2	-8502	-1118.65	18902			5086	1775	SLV 13	0.09	No
fin.	2	-2732	2405.82	3021			3032	1192	SLV 13	0.39	No
ini.	2	4373	349.1	3622			2059	0	SLV 1	0	No
fin.	2	-1218	-939.76	-7342			2493	983	SLV 1	0.13	No
ini.	2	4373	349.1	3622			2059	0	SLV 2	0	No
fin.	2	-1218	-939.76	-7342			2493	983	SLV 2	0.13	No
ini.	2	3594	-250.89	3684			2059	0	SLV 4	0	No
fin.	2	-277	349.29	-5088			2158	827	SLV 4	0.16	No
ini.	2	-8502	-1118.65	18902			5086	1775	SLV 14	0.09	No
fin.	2	-2732	2405.82	3021			3032	1192	SLV 14	0.39	No
ini.	2	-3087	95.04	13483			3158	1235	SLV 10	0.09	No
fin.	2	-3300	-269.01	-3236			3234	1261	SLV 10	0.39	No

Tabella dei coefficienti di sicurezza minimi

Stato limite	Coeff.s.	Comb.	Verifica
PF_SLV	0.673	SLV 11	No
V_SLV	0	SLV 1	No
PF_SLU	0.855	SLU 83	No
V_SLU	0.057	SLU 83	No

Trave di accoppiamento 15

Verifiche condotte secondo D.M. 17-01-18 (N.T.C.)

Dati geometrici

X ini.	Y ini.	Z ini.inf.	Z ini.sup.	H ini.	X fin.	Y fin.	Z fin.inf.	Z fin.sup	H fin.	Luce	Spessore	R. Trazione
-13.758	3.3	0.49	1.32	0.83	-14.758	3.3	0.49	1.32	0.83	1	0.3	30000

Caratteristiche del materiale

(Circolare 7 21-01-19 C8.5.I) Muratura in mattoni pieni e malta di calce LC2_Corti

fb_	fhk	fvk0	fhmedio	τ0	fv0	μ	ϕ	fvk,lim	E	G	FC
120000			172500	9000	20000	0.577	0.767	6500	320000000	128000000	1.2

Verifiche a pressoflessione delle travi in muratura in combinazioni non sismiche

Sezione	γM	N	M	Mu	Comb.	c.s.	Verifica
ini.	3	1250	218.71	1048.55	SLU 81	4.79	Si
fin.	3	-102	495.83	1048.55	SLU 81	2.11	Si
ini.	3	1192	201.28	1048.55	SLU 78	5.21	Si
fin.	3	-103	488.2	1048.55	SLU 78	2.15	Si
ini.	3	1192	201.27	1048.55	SLU 77	5.21	Si
fin.	3	-103	488.55	1048.55	SLU 77	2.15	Si
ini.	3	1185	201.51	1048.55	SLU 74	5.2	Si
fin.	3	-101	482.1	1048.55	SLU 74	2.17	Si
ini.	3	1185	201.52	1048.55	SLU 75	5.2	Si
fin.	3	-101	481.75	1048.55	SLU 75	2.18	Si
ini.	3	1257	218.48	1048.55	SLU 83	4.8	Si
fin.	3	-104	502.28	1048.55	SLU 83	2.09	Si
ini.	3	1250	218.72	1048.55	SLU 82	4.79	Si
fin.	3	-102	495.48	1048.55	SLU 82	2.12	Si
ini.	3	1257	218.49	1048.55	SLU 84	4.8	Si
fin.	3	-104	501.93	1048.55	SLU 84	2.09	Si
ini.	3	1181	200.25	1048.55	SLU 79	5.24	Si
fin.	3	-103	484.58	1048.55	SLU 79	2.16	Si
ini.	3	1181	200.26	1048.55	SLU 80	5.24	Si
fin.	3	-102	484.24	1048.55	SLU 80	2.17	Si

Verifiche a taglio delle travi in muratura secondo §C8.7.1.3.1 in combinazioni non sismiche

Sezione	γM	N	M	V	Vt	Vp	Vt fess. diag.	Vt,lim	Comb.	c.s.	Verifica
ini.	3	1099	187.57	7947			796	0	SLU 63	0	No
fin.	3	-95	450.07	-5938			827	316	SLU 63	0.05	No
ini.	3	1022	169.33	7672			796	0	SLU 58	0	No
fin.	3	-94	432.72	-5694			827	316	SLU 58	0.06	No
ini.	3	1034	170.35	7742			796	0	SLU 56	0	No
fin.	3	-94	436.68	-5747			827	316	SLU 56	0.05	No
ini.	3	1034	170.36	7736			796	0	SLU 57	0	No
fin.	3	-94	436.33	-5743			827	316	SLU 57	0.06	No
ini.	3	1099	187.56	7953			796	0	SLU 62	0	No
fin.	3	-95	450.41	-5942			828	316	SLU 62	0.05	No
ini.	3	1092	187.79	7833			796	0	SLU 60	0	No
fin.	3	-93	443.96	-5859			827	316	SLU 60	0.05	No
ini.	3	1022	169.34	7666			796	0	SLU 59	0	No
fin.	3	-93	432.37	-5689			827	316	SLU 59	0.06	No
ini.	3	1111	197.15	7555			796	0	SLU 42	0	No
fin.	3	-88	431.73	-5731			825	315	SLU 42	0.05	No
ini.	3	1091	187.8	7827			796	0	SLU 61	0	No
fin.	3	-93	443.62	-5855			827	316	SLU 61	0.05	No
ini.	3	1015	169.58	7543			796	0	SLU 55	0	No
fin.	3	-91	425.69	-5603			826	316	SLU 55	0.06	No

Verifiche a pressoflessione delle travi in muratura in combinazioni sismiche

Sezione	γM	N	M	Mu	Comb.	c.s.	Verifica
ini.	2	4229	697.24	1572.82	SLV 1	2.26	Si
fin.	2	520	365.1	1572.82	SLV 1	4.31	Si
ini.	2	4467	800.08	1572.82	SLV 3	1.97	Si
fin.	2	305	420.79	1572.82	SLV 3	3.74	Si
ini.	2	2238	485.1	1572.82	SLV 7	3.24	Si
fin.	2	-282	437.63	1572.82	SLV 7	3.59	Si
ini.	2	4229	697.24	1572.82	SLV 2	2.26	Si
fin.	2	520	365.1	1572.82	SLV 2	4.31	Si
ini.	2	2238	485.1	1572.82	SLV 8	3.24	Si
fin.	2	-282	437.63	1572.82	SLV 8	3.59	Si
ini.	2	-2932	-545.5	1572.82	SLV 13	2.88	Si
fin.	2	-445	227.6	1572.82	SLV 13	6.91	Si
ini.	2	-2694	-442.66	1572.82	SLV 16	3.55	Si
fin.	2	-659	283.29	1572.82	SLV 16	5.55	Si
ini.	2	4467	800.08	1572.82	SLV 4	1.97	Si
fin.	2	305	420.79	1572.82	SLV 4	3.74	Si
ini.	2	-2694	-442.66	1572.82	SLV 15	3.55	Si
fin.	2	-659	283.29	1572.82	SLV 15	5.55	Si
ini.	2	-2932	-545.5	1572.82	SLV 14	2.88	Si
fin.	2	-445	227.6	1572.82	SLV 14	6.91	Si

Verifiche a taglio delle travi in muratura secondo §C8.7.1.3.1 in combinazioni sismiche

Sezione	γM	N	M	V	Vt	Vp	Vt fess. diag.	Vt,lim	Comb.	c.s.	Verifica
ini.	2	4229	697.24	4067			1194	0	SLV 2	0	No
fin.	2	520	365.1	-6348			1194	343	SLV 2	0.05	No
ini.	2	2238	485.1	4131			1194	0	SLV 8	0	No
fin.	2	-282	437.63	-4600			1288	498	SLV 8	0.11	No
ini.	2	-703	-230.52	7366			1427	562	SLV 10	0.08	No
fin.	2	143	210.76	-3930			1194	423	SLV 10	0.11	No
ini.	2	1446	142.31	6173			1194	0	SLV 6	0	No
fin.	2	432	252.01	-5132			1194	363	SLV 6	0.07	No
ini.	2	2238	485.1	4131			1194	0	SLV 7	0	No

Sezione	γM	N	M	V	Vt	Vp	Vt fess. diag.	Vt,lim	Comb.	c.s.	Verifica
fin.	2	-282	437.63	-4600			1288	498	SLV 7	0.11	No
ini.	2	-703	-230.52	7366			1427	562	SLV 9	0.08	No
fin.	2	143	210.76	-3930			1194	423	SLV 9	0.11	No
ini.	2	1446	142.31	6173			1194	0	SLV 5	0	No
fin.	2	432	252.01	-5132			1194	363	SLV 5	0.07	No
ini.	2	4229	697.24	4067			1194	0	SLV 1	0	No
fin.	2	520	365.1	-6348			1194	343	SLV 1	0.05	No
ini.	2	4467	800.08	3454			1194	0	SLV 3	0	No
fin.	2	305	420.79	-6189			1194	390	SLV 3	0.06	No
ini.	2	4467	800.08	3454			1194	0	SLV 4	0	No
fin.	2	305	420.79	-6189			1194	390	SLV 4	0.06	No

Tabella dei coefficienti di sicurezza minimi

Stato limite	Coeff.s.	Comb.	Verifica
PF_SLV	1.966	SLV 3	Si
V_SLV	0	SLV 1	No
PF_SLU	2.088	SLU 83	Si
V_SLU	0	SLU 10	No

Trave di accoppiamento 16

Verifiche condotte secondo D.M. 17-01-18 (N.T.C.)

Dati geometrici

X ini.	Y ini.	Z ini.inf.	Z ini.sup.	H ini.	X fin.	Y fin.	Z fin.inf.	Z fin.sup	H fin.	Luce	Spessore	R. Trazione
-17.768	6.565	-1.67	0.33	2	-16.768	6.565	-1.67	0.33	2	1	0.45	30000

Caratteristiche del materiale

(Circolare 7 21-01-19 C8.5.I) Muratura in mattoni pieni e malta di calce LC2_Corti

fb_	fhk	fvk0	fhmedio	τ0	fv0	μ	ϕ	fvk,lim	E	G	FC
120000			172500	9000	20000	0.577	0.767	6500	320000000	128000000	1.2

Verifiche a pressoflessione delle travi in muratura in combinazioni non sismiche

Sezione	γM	N	M	Mu	Comb.	c.s.	Verifica
ini.	3	-5134	-3044.66	9132.35	SLU 79	3	Si
fin.	3	-6829	805.9	9132.35	SLU 79	11.33	Si
ini.	3	-5100	-3023.89	9132.35	SLU 74	3.02	Si
fin.	3	-6789	801.58	9132.35	SLU 74	11.39	Si
ini.	3	-5255	-3130.81	9132.35	SLU 84	2.92	Si
fin.	3	-7005	824.24	9132.35	SLU 84	11.08	Si
ini.	3	-5255	-3130.23	9132.35	SLU 83	2.92	Si
fin.	3	-7005	824.48	9132.35	SLU 83	11.08	Si
ini.	3	-5134	-3045.24	9132.35	SLU 80	3	Si
fin.	3	-6829	805.66	9132.35	SLU 80	11.34	Si
ini.	3	-5190	-3088.36	9132.35	SLU 82	2.96	Si
fin.	3	-6920	810.67	9132.35	SLU 82	11.27	Si
ini.	3	-5165	-3066.34	9132.35	SLU 77	2.98	Si
fin.	3	-6874	815.15	9132.35	SLU 77	11.2	Si
ini.	3	-5100	-3024.47	9132.35	SLU 75	3.02	Si
fin.	3	-6789	801.34	9132.35	SLU 75	11.4	Si
ini.	3	-5165	-3066.92	9132.35	SLU 78	2.98	Si
fin.	3	-6874	814.91	9132.35	SLU 78	11.21	Si
ini.	3	-5191	-3087.78	9132.35	SLU 81	2.96	Si
fin.	3	-6920	810.91	9132.35	SLU 81	11.26	Si

Verifiche a taglio delle travi in muratura secondo §C8.7.1.3.1 in combinazioni non sismiche

Sezione	γM	N	M	V	Vt	Vp	Vt fess. diag.	Vt,lim	Comb.	c.s.	Verifica
ini.	3	-5191	-3087.78	2004			5542	2155	SLU 81	1.08	Si
fin.	3	-6920	810.91	10749			6234	2372	SLU 81	0.22	No
ini.	3	-5165	-3066.34	2023			5532	2152	SLU 77	1.06	Si
fin.	3	-6874	815.15	10632			6216	2366	SLU 77	0.22	No
ini.	3	-5165	-3066.92	2023			5532	2152	SLU 78	1.06	Si
fin.	3	-6874	814.91	10633			6216	2366	SLU 78	0.22	No
ini.	3	-5134	-3045.24	2002			5519	2148	SLU 80	1.07	Si
fin.	3	-6829	805.66	10556			6198	2361	SLU 80	0.22	No
ini.	3	-5134	-3044.66	2002			5519	2148	SLU 79	1.07	Si
fin.	3	-6829	805.9	10555			6198	2361	SLU 79	0.22	No
ini.	3	-5190	-3088.36	2004			5542	2155	SLU 82	1.08	Si
fin.	3	-6920	810.67	10750			6234	2372	SLU 82	0.22	No
ini.	3	-5255	-3130.23	2030			5568	2164	SLU 83	1.07	Si
fin.	3	-7005	824.48	10893			6268	2382	SLU 83	0.22	No
ini.	3	-5100	-3023.89	1997			5506	2143	SLU 74	1.07	Si
fin.	3	-6789	801.58	10488			6182	2356	SLU 74	0.22	No
ini.	3	-5100	-3024.47	1997			5506	2143	SLU 75	1.07	Si
fin.	3	-6789	801.34	10489			6182	2356	SLU 75	0.22	No
ini.	3	-5255	-3130.81	2030			5568	2164	SLU 84	1.07	Si
fin.	3	-7005	824.24	10894			6268	2382	SLU 84	0.22	No

Verifiche a pressoflessione delle travi in muratura in combinazioni sismiche

Sezione	γM	N	M	Mu	Comb.	c.s.	Verifica
ini.	2	-2383	-4835.21	13698.53	SLV 1	2.83	Si
fin.	2	-6256	2665.56	13698.53	SLV 1	5.14	Si
ini.	2	-3416	1721.35	13698.53	SLV 13	7.96	Si
fin.	2	-840	-1939.62	13698.53	SLV 13	7.06	Si
ini.	2	-2383	-4835.21	13698.53	SLV 2	2.83	Si
fin.	2	-6256	2665.56	13698.53	SLV 2	5.14	Si

Sezione	γM	N	M	Mu	Comb.	c.s.	Verifica
ini.	2	-3416	1721.35	13698.53	SLV 14	7.96	Si
fin.	2	-840	-1939.62	13698.53	SLV 14	7.06	Si
ini.	2	-5860	-2798.25	13698.53	SLV 12	4.9	Si
fin.	2	-7729	462.93	13698.53	SLV 12	29.59	Si
ini.	2	-5550	-4765.22	13698.53	SLV 7	2.87	Si
fin.	2	-9354	1844.48	13698.53	SLV 7	7.43	Si
ini.	2	-5550	-4765.22	13698.53	SLV 8	2.87	Si
fin.	2	-9354	1844.48	13698.53	SLV 8	7.43	Si
ini.	2	-3678	-5862.04	13698.53	SLV 4	2.34	Si
fin.	2	-8561	3030.51	13698.53	SLV 4	4.52	Si
ini.	2	-5860	-2798.25	13698.53	SLV 11	4.9	Si
fin.	2	-7729	462.93	13698.53	SLV 11	29.59	Si
ini.	2	-3678	-5862.04	13698.53	SLV 3	2.34	Si
fin.	2	-8561	3030.51	13698.53	SLV 3	4.52	Si

Verifiche a taglio delle travi in muratura secondo §C8.7.1.3.1 in combinazioni sismiche

Sezione	γM	N	M	V	Vt	Vp	Vt fess. diag.	Vt,lim	Comb.	c.s.	Verifica
ini.	2	-3678	-5862.04	9689			6670	2638	SLV 4	0.27	No
fin.	2	-8561	3030.51	17837			8623	3333	SLV 4	0.19	No
ini.	2	-5550	-4765.22	3716			7419	2924	SLV 8	0.79	No
fin.	2	-9354	1844.48	13988			8940	3433	SLV 8	0.25	No
ini.	2	-3416	1721.35	-6871			6565	2595	SLV 13	0.38	No
fin.	2	-840	-1939.62	-3592			5535	2131	SLV 13	0.59	No
ini.	2	-2383	-4835.21	9805			6152	2420	SLV 2	0.25	No
fin.	2	-6256	2665.56	15430			7701	3025	SLV 2	0.2	No
ini.	2	-2383	-4835.21	9805			6152	2420	SLV 1	0.25	No
fin.	2	-6256	2665.56	15430			7701	3025	SLV 1	0.2	No
ini.	2	-3416	1721.35	-6871			6565	2595	SLV 14	0.38	No
fin.	2	-840	-1939.62	-3592			5535	2131	SLV 14	0.59	No
ini.	2	-5550	-4765.22	3716			7419	2924	SLV 7	0.79	No
fin.	2	-9354	1844.48	13988			8940	3433	SLV 7	0.25	No
ini.	2	-1234	-1342.44	4105			5693	2208	SLV 5	0.54	No
fin.	2	-1672	627.97	5964			5868	2291	SLV 5	0.38	No
ini.	2	-3678	-5862.04	9689			6670	2638	SLV 3	0.27	No
fin.	2	-8561	3030.51	17837			8623	3333	SLV 3	0.19	No
ini.	2	-1234	-1342.44	4105			5693	2208	SLV 6	0.54	No
fin.	2	-1672	627.97	5964			5868	2291	SLV 6	0.38	No

Tabella dei coefficienti di sicurezza minimi

Stato limite	Coeff.s.	Comb.	Verifica
PF_SLV	2.337	SLV 3	Si
V_SLV	0.187	SLV 3	No
PF_SLU	2.917	SLU 84	Si
V_SLU	0.219	SLU 84	No

Trave di accoppiamento 17

Verifiche condotte secondo D.M. 17-01-18 (N.T.C.)

Dati geometrici

X ini.	Y ini.	Z ini.inf.	Z ini.sup.	H ini.	X fin.	Y fin.	Z fin.inf.	Z fin.sup	H fin.	Luce	Spessore	R. Trazione
-17.768	6.565	0.73	1.32	0.59	-16.768	6.565	0.73	1.32	0.59	1	0.45	30000

Caratteristiche del materiale

(Circolare 7 21-01-19 C8.5.I) Muratura in mattoni pieni e malta di calce LC2_Corti

fb_	fhk	fvk0	fhmedio	τ0	fv0	μ	ϕ	fvk,lim	E	G	FC
120000			172500	9000	20000	0.577	0.767	6500	320000000	128000000	1.2

Verifiche a pressoflessione delle travi in muratura in combinazioni non sismiche

Sezione	γM	N	M	Mu	Comb.	c.s.	Verifica
ini.	3	1264	-828.29	794.74	SLU 79	0.96	No
fin.	3	2361	187.31	794.74	SLU 79	4.24	Si
ini.	3	1217	-840.22	794.74	SLU 81	0.95	No
fin.	3	2322	182.51	794.74	SLU 81	4.35	Si
ini.	3	1278	-834.6	794.74	SLU 78	0.95	No
fin.	3	2385	189.92	794.74	SLU 78	4.18	Si
ini.	3	1265	-828.26	794.74	SLU 80	0.96	No
fin.	3	2362	187.24	794.74	SLU 80	4.24	Si
ini.	3	1218	-840.19	794.74	SLU 82	0.95	No
fin.	3	2323	182.44	794.74	SLU 82	4.36	Si
ini.	3	1251	-852.54	794.74	SLU 83	0.93	No
fin.	3	2375	187.09	794.74	SLU 83	4.25	Si
ini.	3	1244	-822.28	794.74	SLU 75	0.97	No
fin.	3	2332	185.34	794.74	SLU 75	4.29	Si
ini.	3	1243	-822.31	794.74	SLU 74	0.97	No
fin.	3	2332	185.4	794.74	SLU 74	4.29	Si
ini.	3	1277	-834.63	794.74	SLU 77	0.95	No
fin.	3	2384	189.98	794.74	SLU 77	4.18	Si
ini.	3	1252	-852.51	794.74	SLU 84	0.93	No
fin.	3	2375	187.02	794.74	SLU 84	4.25	Si

Verifiche a taglio delle travi in muratura secondo §C8.7.1.3.1 in combinazioni non sismiche

Sezione	γM	N	M	V	Vt	Vp	Vt fess. diag.	Vt,lim	Comb.	c.s.	Verifica
ini.	3	1137	-759.31	3648			682	0	SLU 61	0	No
fin.	3	2137	168.1	-1117			682	0	SLU 61	0	No
ini.	3	1162	-741.44	3527			682	0	SLU 53	0	No

Sezione	γM	N	M	V	Vt	Vp	Vt fess. diag.	Vt,lim	Comb.	c.s.	Verifica
fin.	3	2146	171.06	-1035			682	0	SLU 53	0	No
ini.	3	1163	-741.4	3527			682	0	SLU 54	0	No
fin.	3	2147	170.99	-1035			682	0	SLU 54	0	No
ini.	3	1151	-735.04	3503			682	0	SLU 55	0	No
fin.	3	2124	168.28	-1036			682	0	SLU 55	0	No
ini.	3	841	-511.68	2417			682	57	SLU 1	0.02	No
fin.	3	1523	121.97	-686			682	0	SLU 1	0	No
ini.	3	1196	-753.76	3575			682	0	SLU 56	0	No
fin.	3	2199	175.64	-1037			682	0	SLU 56	0	No
ini.	3	1184	-747.38	3551			682	0	SLU 59	0	No
fin.	3	2176	172.9	-1038			682	0	SLU 59	0	No
ini.	3	1136	-759.34	3648			682	0	SLU 60	0	No
fin.	3	2137	168.17	-1116			682	0	SLU 60	0	No
ini.	3	1183	-747.42	3551			682	0	SLU 58	0	No
fin.	3	2176	172.97	-1037			682	0	SLU 58	0	No
ini.	3	1197	-753.72	3575			682	0	SLU 57	0	No
fin.	3	2199	175.57	-1037			682	0	SLU 57	0	No

Verifiche a pressoflessione delle travi in muratura in combinazioni sismiche

Sezione	γM	N	M	Mu	Comb.	c.s.	Verifica
ini.	2	678	2506.51	1192.11	SLV 10	0.48	No
fin.	2	-5749	416.56	1192.11	SLV 10	2.86	Si
ini.	2	251	1870.64	1192.11	SLV 6	0.64	No
fin.	2	-4290	1026.53	1192.11	SLV 6	1.16	Si
ini.	2	678	2506.51	1192.11	SLV 9	0.48	No
fin.	2	-5749	416.56	1192.11	SLV 9	2.86	Si
ini.	2	292	-2443.26	1192.11	SLV 4	0.49	No
fin.	2	6044	967.81	1192.11	SLV 4	1.23	Si
ini.	2	1505	-2988.97	1192.11	SLV 11	0.4	No
fin.	2	7530	-768.58	1192.11	SLV 11	1.55	Si
ini.	2	1079	-3624.84	1192.11	SLV 7	0.33	No
fin.	2	8989	-158.61	1192.11	SLV 7	7.52	Si
ini.	2	292	-2443.26	1192.11	SLV 3	0.49	No
fin.	2	6044	967.81	1192.11	SLV 3	1.23	Si
ini.	2	251	1870.64	1192.11	SLV 5	0.64	No
fin.	2	-4290	1026.53	1192.11	SLV 5	1.16	Si
ini.	2	1505	-2988.97	1192.11	SLV 12	0.4	No
fin.	2	7530	-768.58	1192.11	SLV 12	1.55	Si
ini.	2	1079	-3624.84	1192.11	SLV 8	0.33	No
fin.	2	8989	-158.61	1192.11	SLV 8	7.52	Si

Verifiche a taglio delle travi in muratura secondo §C8.7.1.3.1 in combinazioni sismiche

Sezione	γM	N	M	V	Vt	Vp	Vt fess. diag.	Vt,lim	Comb.	c.s.	Verifica
ini.	2	1079	-3624.84	5196			1022	167	SLV 7	0.03	No
fin.	2	8989	-158.61	246			1022	0	SLV 7	0	No
ini.	2	292	-2443.26	6427			1022	340	SLV 3	0.05	No
fin.	2	6044	967.81	1989			1022	0	SLV 3	0	No
ini.	2	1465	1324.93	-1106			1022	0	SLV 13	0	No
fin.	2	-2804	-709.87	-3551			1770	679	SLV 13	0.19	No
ini.	2	1465	1324.93	-1106			1022	0	SLV 14	0	No
fin.	2	-2804	-709.87	-3551			1770	679	SLV 14	0.19	No
ini.	2	43	-794.62	5500			1022	378	SLV 1	0.07	No
fin.	2	2061	1323.35	1859			1022	0	SLV 1	0	No
ini.	2	1505	-2988.97	3214			1022	0	SLV 11	0	No
fin.	2	7530	-768.58	-1377			1022	0	SLV 11	0	No
ini.	2	1505	-2988.97	3214			1022	0	SLV 12	0	No
fin.	2	7530	-768.58	-1377			1022	0	SLV 12	0	No
ini.	2	43	-794.62	5500			1022	378	SLV 2	0.07	No
fin.	2	2061	1323.35	1859			1022	0	SLV 2	0	No
ini.	2	292	-2443.26	6427			1022	340	SLV 4	0.05	No
fin.	2	6044	967.81	1989			1022	0	SLV 4	0	No
ini.	2	1079	-3624.84	5196			1022	167	SLV 8	0.03	No
fin.	2	8989	-158.61	246			1022	0	SLV 8	0	No

Tabella dei coefficienti di sicurezza minimi

Stato limite	Coeff.s.	Comb.	Verifica
PF_SLV	0.329	SLV 7	No
V_SLV	0	SLV 1	No
PF_SLU	0.932	SLU 83	No
V_SLU	0	SLU 1	No

Trave di accoppiamento 18

Verifiche condotte secondo D.M. 17-01-18 (N.T.C.)

Dati geometrici

X ini.	Y ini.	Z ini.inf.	Z ini.sup.	H ini.	X fin.	Y fin.	Z fin.inf.	Z fin.sup	H fin.	Luce	Spessore	R. Trazione
-12.888	6.565	-1.67	0.33	2	-11.888	6.565	-1.67	0.33	2	1	0.45	30000

Caratteristiche del materiale

(Circolare 7 21-01-19 C8.5.I) Muratura in mattoni pieni e malta di calce LC2_Corti

fb_	fhk	fvk0	fhmedio	τ0	fv0	μ	ϕ	fvk,lim	E	G	FC
120000			172500	9000	20000	0.577	0.767	6500	320000000	128000000	1.2

Verifiche a pressoflessione delle travi in muratura in combinazioni non sismiche

Sezione	γM	N	M	Mu	Comb.	c.s.	Verifica

Sezione	γM	N	M	Mu	Comb.	c.s.	Verifica
ini.	3	-6534	-40.61	9132.35	SLU 84	224.9	Si
fin.	3	-6841	63.88	9132.35	SLU 84	142.96	Si
ini.	3	-6320	-43.42	9132.35	SLU 75	210.32	Si
fin.	3	-6621	62.68	9132.35	SLU 75	145.71	Si
ini.	3	-6468	-44.38	9132.35	SLU 81	205.76	Si
fin.	3	-6779	70.1	9132.35	SLU 81	130.28	Si
ini.	3	-6318	-43.41	9132.35	SLU 74	210.36	Si
fin.	3	-6619	62.41	9132.35	SLU 74	146.32	Si
ini.	3	-6533	-40.6	9132.35	SLU 83	224.96	Si
fin.	3	-6840	63.61	9132.35	SLU 83	143.56	Si
ini.	3	-6217	-46.72	9132.35	SLU 73	195.47	Si
fin.	3	-6519	66.85	9132.35	SLU 73	136.6	Si
ini.	3	-5925	-50.87	9132.35	SLU 61	179.51	Si
fin.	3	-6215	61.68	9132.35	SLU 61	148.06	Si
ini.	3	-5440	-29.16	9132.35	SLU 40	313.15	Si
fin.	3	-5699	61.32	9132.35	SLU 40	148.94	Si
ini.	3	-5924	-50.86	9132.35	SLU 60	179.54	Si
fin.	3	-6213	61.42	9132.35	SLU 60	148.69	Si
ini.	3	-6469	-44.39	9132.35	SLU 82	205.71	Si
fin.	3	-6781	70.36	9132.35	SLU 82	129.79	Si

Verifiche a taglio delle travi in muratura secondo §C8.7.1.3.1 in combinazioni non sismiche

Sezione	γM	N	M	V	Vt	Vp	Vt fess. diag.	Vt,lim	Comb.	c.s.	Verifica
ini.	3	-6534	-40.61	-3632			6080	2325	SLU 84	0.64	No
fin.	3	-6841	63.88	4357			6202	2362	SLU 84	0.54	No
ini.	3	-6318	-43.41	-3473			5993	2299	SLU 74	0.66	No
fin.	3	-6619	62.41	4191			6114	2336	SLU 74	0.56	No
ini.	3	-6469	-44.39	-3568			6054	2317	SLU 82	0.65	No
fin.	3	-6781	70.36	4325			6178	2355	SLU 82	0.54	No
ini.	3	-6533	-40.6	-3632			6079	2325	SLU 83	0.64	No
fin.	3	-6840	63.61	4355			6202	2362	SLU 83	0.54	No
ini.	3	-6384	-39.62	-3537			6020	2307	SLU 77	0.65	No
fin.	3	-6679	55.93	4223			6138	2343	SLU 77	0.55	No
ini.	3	-6347	-39.14	-3516			6005	2302	SLU 80	0.65	No
fin.	3	-6639	53.71	4190			6121	2338	SLU 80	0.56	No
ini.	3	-6346	-39.13	-3516			6004	2302	SLU 79	0.65	No
fin.	3	-6637	53.44	4189			6121	2338	SLU 79	0.56	No
ini.	3	-6468	-44.38	-3568			6053	2317	SLU 81	0.65	No
fin.	3	-6779	70.1	4324			6178	2355	SLU 81	0.54	No
ini.	3	-6320	-43.42	-3473			5994	2299	SLU 75	0.66	No
fin.	3	-6621	62.68	4193			6114	2336	SLU 75	0.56	No
ini.	3	-6385	-39.63	-3537			6020	2307	SLU 78	0.65	No
fin.	3	-6681	56.19	4225			6138	2343	SLU 78	0.55	No

Verifiche a pressoflessione delle travi in muratura in combinazioni sismiche

Sezione	γM	N	M	Mu	Comb.	c.s.	Verifica
ini.	2	-6957	2568.71	13698.53	SLV 16	5.33	Si
fin.	2	-4039	-2203.7	13698.53	SLV 16	6.22	Si
ini.	2	-3877	-2263.76	13698.53	SLV 3	6.05	Si
fin.	2	-7347	2838.7	13698.53	SLV 3	4.83	Si
ini.	2	-7384	-123.36	13698.53	SLV 8	111.04	Si
fin.	2	-8757	1709.65	13698.53	SLV 8	8.01	Si
ini.	2	-1795	-2648.64	13698.53	SLV 2	5.17	Si
fin.	2	-5145	2293.74	13698.53	SLV 2	5.97	Si
ini.	2	-6957	2568.71	13698.53	SLV 15	5.33	Si
fin.	2	-4039	-2203.7	13698.53	SLV 15	6.22	Si
ini.	2	-4875	2183.83	13698.53	SLV 13	6.27	Si
fin.	2	-1838	-2748.67	13698.53	SLV 13	4.98	Si
ini.	2	-1795	-2648.64	13698.53	SLV 1	5.17	Si
fin.	2	-5145	2293.74	13698.53	SLV 1	5.97	Si
ini.	2	-7384	-123.36	13698.53	SLV 7	111.04	Si
fin.	2	-8757	1709.65	13698.53	SLV 7	8.01	Si
ini.	2	-3877	-2263.76	13698.53	SLV 4	6.05	Si
fin.	2	-7347	2838.7	13698.53	SLV 4	4.83	Si
ini.	2	-4875	2183.83	13698.53	SLV 14	6.27	Si
fin.	2	-1838	-2748.67	13698.53	SLV 14	4.98	Si

Verifiche a taglio delle travi in muratura secondo §C8.7.1.3.1 in combinazioni sismiche

Sezione	γM	N	M	V	Vt	Vp	Vt fess. diag.	Vt,lim	Comb.	c.s.	Verifica
ini.	2	-3877	-2263.76	5354			6750	2669	SLV 4	0.5	No
fin.	2	-7347	2838.7	11571			8138	3175	SLV 4	0.27	No
ini.	2	-6957	2568.71	-10618			7982	3122	SLV 16	0.29	No
fin.	2	-4039	-2203.7	-4549			6815	2695	SLV 16	0.59	No
ini.	2	-7384	-123.36	-963			8152	3179	SLV 8	3.3	Si
fin.	2	-8757	1709.65	7453			8702	3358	SLV 8	0.45	No
ini.	2	-3877	-2263.76	5354			6750	2669	SLV 3	0.5	No
fin.	2	-7347	2838.7	11571			8138	3175	SLV 3	0.27	No
ini.	2	-1795	-2648.64	5977			5917	2314	SLV 2	0.39	No
fin.	2	-5145	2293.74	10264			7257	2864	SLV 2	0.28	No
ini.	2	-7384	-123.36	-963			8152	3179	SLV 7	3.3	Si
fin.	2	-8757	1709.65	7453			8702	3358	SLV 7	0.45	No
ini.	2	-1795	-2648.64	5977			5917	2314	SLV 1	0.39	No
fin.	2	-5145	2293.74	10264			7257	2864	SLV 1	0.28	No
ini.	2	-6957	2568.71	-10618			7982	3122	SLV 15	0.29	No
fin.	2	-4039	-2203.7	-4549			6815	2695	SLV 15	0.59	No
ini.	2	-4875	2183.83	-9996			7149	2824	SLV 13	0.28	No
fin.	2	-1838	-2748.67	-5855			5934	2322	SLV 13	0.4	No
ini.	2	-4875	2183.83	-9996			7149	2824	SLV 14	0.28	No
fin.	2	-1838	-2748.67	-5855			5934	2322	SLV 14	0.4	No

Tabella dei coefficienti di sicurezza minimi

Stato limite	Coeff.s.	Comb.	Verifica
PF_SLV	4.826	SLV 3	Si
V_SLV	0.274	SLV 3	No
PF_SLU	129.789	SLU 82	Si
V_SLU	0.542	SLU 84	No

Trave di accoppiamento 19

Verifiche condotte secondo D.M. 17-01-18 (N.T.C.)

Dati geometrici

X ini.	Y ini.	Z ini.inf.	Z ini.sup.	H ini.	X fin.	Y fin.	Z fin.inf.	Z fin.sup	H fin.	Luce	Spessore	R. Trazione
-12.888	6.565	0.73	1.32	0.59	-11.888	6.565	0.73	1.32	0.59	1	0.45	30000

Caratteristiche del materiale

(Circolare 7 21-01-19 C8.5.I) Muratura in mattoni pieni e malta di calce LC2_Corti

fb_	fhk	fvk0	fhmedio	τ0	fv0	μ	ϕ	fvk,lim	E	G	FC
120000			172500	9000	20000	0.577	0.767	6500	320000000	128000000	1.2

Verifiche a pressoflessione delle travi in muratura in combinazioni non sismiche

Sezione	γM	N	M	Mu	Comb.	c.s.	Verifica
ini.	3	-343	-240.25	794.74	SLU 77	3.31	Si
fin.	3	-522	-305.42	794.74	SLU 77	2.6	Si
ini.	3	-354	-239.78	794.74	SLU 75	3.31	Si
fin.	3	-523	-300.3	794.74	SLU 75	2.65	Si
ini.	3	-353	-239.73	794.74	SLU 74	3.32	Si
fin.	3	-523	-300.26	794.74	SLU 74	2.65	Si
ini.	3	-343	-238.6	794.74	SLU 80	3.33	Si
fin.	3	-522	-303.92	794.74	SLU 80	2.61	Si
ini.	3	-343	-238.55	794.74	SLU 79	3.33	Si
fin.	3	-522	-303.87	794.74	SLU 79	2.62	Si
ini.	3	-343	-240.3	794.74	SLU 78	3.31	Si
fin.	3	-522	-305.47	794.74	SLU 78	2.6	Si
ini.	3	-391	-248.96	794.74	SLU 81	3.19	Si
fin.	3	-559	-308.36	794.74	SLU 81	2.58	Si
ini.	3	-391	-249.01	794.74	SLU 82	3.19	Si
fin.	3	-559	-308.41	794.74	SLU 82	2.58	Si
ini.	3	-381	-249.53	794.74	SLU 84	3.18	Si
fin.	3	-559	-313.57	794.74	SLU 84	2.53	Si
ini.	3	-381	-249.48	794.74	SLU 83	3.19	Si
fin.	3	-558	-313.52	794.74	SLU 83	2.53	Si

Verifiche a taglio delle travi in muratura secondo §C8.7.1.3.1 in combinazioni non sismiche

Sezione	γM	N	M	V	Vt	Vp	Vt fess. diag.	Vt,lim	Comb.	c.s.	Verifica
ini.	3	-343	-238.55	2120			773	302	SLU 79	0.14	No
fin.	3	-522	-303.87	-2208			821	323	SLU 79	0.15	No
ini.	3	-343	-238.6	2120			773	302	SLU 80	0.14	No
fin.	3	-522	-303.92	-2208			821	323	SLU 80	0.15	No
ini.	3	-354	-239.78	2117			776	303	SLU 75	0.14	No
fin.	3	-523	-300.3	-2193			821	324	SLU 75	0.15	No
ini.	3	-343	-240.3	2132			773	302	SLU 78	0.14	No
fin.	3	-522	-305.47	-2219			821	323	SLU 78	0.15	No
ini.	3	-381	-249.53	2207			783	307	SLU 84	0.14	No
fin.	3	-559	-313.57	-2290			831	328	SLU 84	0.14	No
ini.	3	-343	-240.25	2131			773	302	SLU 77	0.14	No
fin.	3	-522	-305.42	-2218			821	323	SLU 77	0.15	No
ini.	3	-391	-248.96	2192			786	308	SLU 81	0.14	No
fin.	3	-559	-308.36	-2264			831	328	SLU 81	0.14	No
ini.	3	-381	-249.48	2207			783	307	SLU 83	0.14	No
fin.	3	-558	-313.52	-2290			831	328	SLU 83	0.14	No
ini.	3	-353	-239.73	2117			776	303	SLU 74	0.14	No
fin.	3	-523	-300.26	-2192			821	324	SLU 74	0.15	No
ini.	3	-391	-249.01	2192			786	308	SLU 82	0.14	No
fin.	3	-559	-308.41	-2264			831	328	SLU 82	0.14	No

Verifiche a pressoflessione delle travi in muratura in combinazioni sismiche

Sezione	γM	N	M	Mu	Comb.	c.s.	Verifica
ini.	2	-4338	-1044.1	1192.11	SLV 4	1.14	Si
fin.	2	-843	873.42	1192.11	SLV 4	1.36	Si
ini.	2	7526	-240.61	1192.11	SLV 9	4.95	Si
fin.	2	6584	-882.43	1192.11	SLV 9	1.35	Si
ini.	2	-449	938.73	1192.11	SLV 16	1.27	Si
fin.	2	-4325	-1042.23	1192.11	SLV 16	1.14	Si
ini.	2	-449	938.73	1192.11	SLV 15	1.27	Si
fin.	2	-4325	-1042.23	1192.11	SLV 15	1.14	Si
ini.	2	-4338	-1044.1	1192.11	SLV 3	1.14	Si
fin.	2	-843	873.42	1192.11	SLV 3	1.36	Si
ini.	2	-29	-1268.11	1192.11	SLV 1	0.94	No
fin.	2	3629	637.72	1192.11	SLV 1	1.87	Si
ini.	2	3860	714.73	1192.11	SLV 14	1.67	Si
fin.	2	147	-1277.93	1192.11	SLV 14	0.93	No
ini.	2	-29	-1268.11	1192.11	SLV 2	0.94	No
fin.	2	3629	637.72	1192.11	SLV 2	1.87	Si
ini.	2	7526	-240.61	1192.11	SLV 10	4.95	Si
fin.	2	6584	-882.43	1192.11	SLV 10	1.35	Si
ini.	2	3860	714.73	1192.11	SLV 13	1.67	Si

Sezione	γM	N	M	Mu	Comb.	c.s.	Verifica
fin.	2	147	-1277.93	1192.11	SLV 13	0.93	No

Verifiche a taglio delle travi in muratura secondo §C8.7.1.3.1 in combinazioni sismiche

Sezione	γM	N	M	V	Vt	Vp	Vt fess. diag.	Vt,lim	Comb.	c.s.	Verifica
ini.	2	3860	714.73	-1689			1022	0	SLV 14	0	No
fin.	2	147	-1277.93	-4409			1022	363	SLV 14	0.08	No
ini.	2	7526	-240.61	234			1022	0	SLV 10	0	No
fin.	2	6584	-882.43	-2093			1022	0	SLV 10	0	No
ini.	2	-29	-1268.11	4405			1030	389	SLV 2	0.09	No
fin.	2	3629	637.72	1610			1022	0	SLV 2	0	No
ini.	2	3860	714.73	-1689			1022	0	SLV 13	0	No
fin.	2	147	-1277.93	-4409			1022	363	SLV 13	0.08	No
ini.	2	-29	-1268.11	4405			1030	389	SLV 1	0.09	No
fin.	2	3629	637.72	1610			1022	0	SLV 1	0	No
ini.	2	-449	938.73	-1510			1142	445	SLV 16	0.29	No
fin.	2	-4325	-1042.23	-4588			2176	794	SLV 16	0.17	No
ini.	2	7526	-240.61	234			1022	0	SLV 9	0	No
fin.	2	6584	-882.43	-2093			1022	0	SLV 9	0	No
ini.	2	6360	-835.46	2063			1022	0	SLV 6	0	No
fin.	2	7629	-307.73	-288			1022	0	SLV 6	0	No
ini.	2	6360	-835.46	2063			1022	0	SLV 5	0	No
fin.	2	7629	-307.73	-288			1022	0	SLV 5	0	No
ini.	2	-449	938.73	-1510			1142	445	SLV 15	0.29	No
fin.	2	-4325	-1042.23	-4588			2176	794	SLV 15	0.17	No

Tabella dei coefficienti di sicurezza minimi

Stato limite	Coeff.s.	Comb.	Verifica
PF_SLV	0.933	SLV 13	No
V_SLV	0	SLV 1	No
PF_SLU	2.535	SLU 84	Si
V_SLU	0.139	SLU 84	No

Trave di accoppiamento 20

Verifiche condotte secondo D.M. 17-01-18 (N.T.C.)

Dati geometrici

X ini.	Y ini.	Z ini.inf.	Z ini.sup.	H ini.	X fin.	Y fin.	Z fin.inf.	Z fin.sup	H fin.	Luce	Spessore	R. Trazione
-7.963	6.565	-1.67	0.33	2	-6.963	6.565	-1.67	0.33	2	1	0.45	30000

Caratteristiche del materiale

(Circolare 7 21-01-19 C8.5.I) Muratura in mattoni pieni e malta di calce LC2_Corti

fb_	fhk	fvk0	fhmedio	τ0	fv0	μ	ϕ	fvk,lim	E	G	FC
120000			172500	9000	20000	0.577	0.767	6500	320000000	128000000	1.2

Verifiche a pressoflessione delle travi in muratura in combinazioni non sismiche

Sezione	γM	N	M	Mu	Comb.	c.s.	Verifica
ini.	3	-5942	718.5	9132.35	SLU 80	12.71	Si
fin.	3	-3527	-1998.83	9132.35	SLU 80	4.57	Si
ini.	3	-5982	726.12	9132.35	SLU 78	12.58	Si
fin.	3	-3550	-2010.72	9132.35	SLU 78	4.54	Si
ini.	3	-6039	706.99	9132.35	SLU 81	12.92	Si
fin.	3	-3602	-2022.85	9132.35	SLU 81	4.51	Si
ini.	3	-5980	725.94	9132.35	SLU 77	12.58	Si
fin.	3	-3548	-2010.51	9132.35	SLU 77	4.54	Si
ini.	3	-5914	705.84	9132.35	SLU 74	12.94	Si
fin.	3	-3523	-1976.22	9132.35	SLU 74	4.62	Si
ini.	3	-6107	727.27	9132.35	SLU 84	12.56	Si
fin.	3	-3629	-2057.35	9132.35	SLU 84	4.44	Si
ini.	3	-6105	727.09	9132.35	SLU 83	12.56	Si
fin.	3	-3627	-2057.14	9132.35	SLU 83	4.44	Si
ini.	3	-5940	718.31	9132.35	SLU 79	12.71	Si
fin.	3	-3526	-1998.62	9132.35	SLU 79	4.57	Si
ini.	3	-5916	706.02	9132.35	SLU 75	12.93	Si
fin.	3	-3525	-1976.44	9132.35	SLU 75	4.62	Si
ini.	3	-6041	707.18	9132.35	SLU 82	12.91	Si
fin.	3	-3603	-2023.06	9132.35	SLU 82	4.51	Si

Verifiche a taglio delle travi in muratura secondo §C8.7.1.3.1 in combinazioni non sismiche

Sezione	γM	N	M	V	Vt	Vp	Vt fess. diag.	Vt,lim	Comb.	c.s.	Verifica
ini.	3	-5942	718.5	-9288			5843	2252	SLU 80	0.24	No
fin.	3	-3527	-1998.83	-1833			4877	1924	SLU 80	1.05	Si
ini.	3	-5982	726.12	-9353			5859	2257	SLU 78	0.24	No
fin.	3	-3550	-2010.72	-1846			4886	1927	SLU 78	1.04	Si
ini.	3	-6041	707.18	-9457			5882	2264	SLU 82	0.24	No
fin.	3	-3603	-2023.06	-1761			4907	1935	SLU 82	1.1	Si
ini.	3	-5940	718.31	-9285			5842	2252	SLU 79	0.24	No
fin.	3	-3526	-1998.62	-1833			4876	1924	SLU 79	1.05	Si
ini.	3	-6105	727.09	-9592			5908	2272	SLU 83	0.24	No
fin.	3	-3627	-2057.14	-1821			4917	1939	SLU 83	1.06	Si
ini.	3	-6039	706.99	-9455			5882	2264	SLU 81	0.24	No
fin.	3	-3602	-2022.85	-1761			4907	1935	SLU 81	1.1	Si
ini.	3	-5914	705.84	-9213			5832	2248	SLU 74	0.24	No
fin.	3	-3523	-1976.22	-1788			4875	1923	SLU 74	1.08	Si
ini.	3	-6107	727.27	-9594			5909	2273	SLU 84	0.24	No
fin.	3	-3629	-2057.35	-1820			4918	1939	SLU 84	1.07	Si

Sezione	γM	N	M	V	Vt	Vp	Vt fess. diag.	Vt,lim	Comb.	c.s.	Verifica
ini.	3	-5980	725.94	-9351			5858	2257	SLU 77	0.24	No
fin.	3	-3548	-2010.51	-1847			4885	1927	SLU 77	1.04	Si
ini.	3	-5916	706.02	-9216			5832	2249	SLU 75	0.24	No
fin.	3	-3525	-1976.44	-1787			4876	1924	SLU 75	1.08	Si

Verifiche a pressoflessione delle travi in muratura in combinazioni sismiche

Sezione	γM	N	M	Mu	Comb.	c.s.	Verifica
ini.	2	-450	58.87	13698.53	SLV 9	232.7	Si
fin.	2	898	-3213.09	13698.53	SLV 9	4.26	Si
ini.	2	-5332	2160.98	13698.53	SLV 14	6.34	Si
fin.	2	-1001	-4912.45	13698.53	SLV 14	2.79	Si
ini.	2	-5332	2160.98	13698.53	SLV 13	6.34	Si
fin.	2	-1001	-4912.45	13698.53	SLV 13	2.79	Si
ini.	2	-450	58.87	13698.53	SLV 10	232.7	Si
fin.	2	898	-3213.09	13698.53	SLV 10	4.26	Si
ini.	2	-2861	-1215.37	13698.53	SLV 4	11.27	Si
fin.	2	-3938	2239.06	13698.53	SLV 4	6.12	Si
ini.	2	-9279	2081.71	13698.53	SLV 12	6.58	Si
fin.	2	-5535	-1446.77	13698.53	SLV 12	9.47	Si
ini.	2	-2861	-1215.37	13698.53	SLV 3	11.27	Si
fin.	2	-3938	2239.06	13698.53	SLV 3	6.12	Si
ini.	2	-9279	2081.71	13698.53	SLV 11	6.58	Si
fin.	2	-5535	-1446.77	13698.53	SLV 11	9.47	Si
ini.	2	-7981	2767.84	13698.53	SLV 15	4.95	Si
fin.	2	-2932	-4382.55	13698.53	SLV 15	3.13	Si
ini.	2	-7981	2767.84	13698.53	SLV 16	4.95	Si
fin.	2	-2932	-4382.55	13698.53	SLV 16	3.13	Si

Verifiche a taglio delle travi in muratura secondo §C8.7.1.3.1 in combinazioni sismiche

Sezione	γM	N	M	V	Vt	Vp	Vt fess. diag.	Vt,lim	Comb.	c.s.	Verifica
ini.	2	-7981	2767.84	-16384			8391	3258	SLV 16	0.2	No
fin.	2	-2932	-4382.55	-8764			6372	2514	SLV 16	0.29	No
ini.	2	-5332	2160.98	-14921			7332	2892	SLV 13	0.19	No
fin.	2	-1001	-4912.45	-9481			5600	2163	SLV 13	0.23	No
ini.	2	-212	-1822.22	3942			5284	2002	SLV 1	0.51	No
fin.	2	-2007	1709.17	6290			6002	2353	SLV 1	0.37	No
ini.	2	-212	-1822.22	3942			5284	2002	SLV 2	0.51	No
fin.	2	-2007	1709.17	6290			6002	2353	SLV 2	0.37	No
ini.	2	-7981	2767.84	-16384			8391	3258	SLV 15	0.2	No
fin.	2	-2932	-4382.55	-8764			6372	2514	SLV 15	0.29	No
ini.	2	-9279	2081.71	-11489			8911	3424	SLV 11	0.3	No
fin.	2	-5535	-1446.77	-2407			7413	2922	SLV 11	1.21	Si
ini.	2	-450	58.87	-6612			5379	2052	SLV 9	0.31	No
fin.	2	898	-3213.09	-4797			5199	1750	SLV 9	0.36	No
ini.	2	-5332	2160.98	-14921			7332	2892	SLV 14	0.19	No
fin.	2	-1001	-4912.45	-9481			5600	2163	SLV 14	0.23	No
ini.	2	-450	58.87	-6612			5379	2052	SLV 10	0.31	No
fin.	2	898	-3213.09	-4797			5199	1750	SLV 10	0.36	No
ini.	2	-9279	2081.71	-11489			8911	3424	SLV 12	0.3	No
fin.	2	-5535	-1446.77	-2407			7413	2922	SLV 12	1.21	Si

Tabella dei coefficienti di sicurezza minimi

Stato limite	Coeff.s.	Comb.	Verifica
PF_SLV	2.789	SLV 13	Si
V_SLV	0.194	SLV 13	No
PF_SLU	4.439	SLU 84	Si
V_SLU	0.237	SLU 84	No

Trave di accoppiamento 21

Verifiche condotte secondo D.M. 17-01-18 (N.T.C.)

Dati geometrici

X ini.	Y ini.	Z ini.inf.	Z ini.sup.	H ini.	X fin.	Y fin.	Z fin.inf.	Z fin.sup	H fin.	Luce	Spessore	R. Trazione
-7.963	6.565	0.73	1.32	0.59	-6.963	6.565	0.73	1.32	0.59	1	0.45	30000

Caratteristiche del materiale

(Circolare 7 21-01-19 C8.5.I) Muratura in mattoni pieni e malta di calce LC2_Corti

fb_	fhk	fvk0	fhmedio	τ0	fv0	μ	ϕ	fvk,lim	E	G	FC
120000			172500	9000	20000	0.577	0.767	6500	320000000	128000000	1.2

Verifiche a pressoflessione delle travi in muratura in combinazioni non sismiche

Sezione	γM	N	M	Mu	Comb.	c.s.	Verifica
ini.	3	33	-20.21	794.74	SLU 84	39.33	Si
fin.	3	-785	-486.58	794.74	SLU 84	1.63	Si
ini.	3	11	-24.97	794.74	SLU 81	31.83	Si
fin.	3	-784	-477.51	794.74	SLU 81	1.66	Si
ini.	3	11	-25.04	794.74	SLU 82	31.74	Si
fin.	3	-785	-477.6	794.74	SLU 82	1.66	Si
ini.	3	71	-12.39	794.74	SLU 80	64.13	Si
fin.	3	-737	-471.97	794.74	SLU 80	1.68	Si
ini.	3	74	-11.79	794.74	SLU 77	67.41	Si
fin.	3	-740	-475.07	794.74	SLU 77	1.67	Si
ini.	3	51	-16.7	794.74	SLU 75	47.59	Si
fin.	3	-740	-466.18	794.74	SLU 75	1.7	Si
ini.	3	34	-20.13	794.74	SLU 83	39.48	Si

Sezione	γM	N	M	Mu	Comb.	c.s.	Verifica
fin.	3	-785	-486.49	794.74	SLU 83	1.63	Si
ini.	3	52	-16.63	794.74	SLU 74	47.8	Si
fin.	3	-739	-466.09	794.74	SLU 74	1.71	Si
ini.	3	74	-11.86	794.74	SLU 78	66.99	Si
fin.	3	-740	-475.16	794.74	SLU 78	1.67	Si
ini.	3	71	-12.32	794.74	SLU 79	64.52	Si
fin.	3	-736	-471.87	794.74	SLU 79	1.68	Si

Verifiche a taglio delle travi in muratura secondo §C8.7.1.3.1 in combinazioni non sismiche

Sezione	γM	N	M	V	Vt	Vp	Vt fess. diag.	Vt,lim	Comb.	c.s.	Verifica
ini.	3	11	-24.97	1662			682	255	SLU 81	0.15	No
fin.	3	-784	-477.51	-3228			891	352	SLU 81	0.11	No
ini.	3	11	-25.04	1663			682	255	SLU 82	0.15	No
fin.	3	-785	-477.6	-3229			891	352	SLU 82	0.11	No
ini.	3	51	-16.7	1567			682	249	SLU 75	0.16	No
fin.	3	-740	-466.18	-3119			879	348	SLU 75	0.11	No
ini.	3	74	-11.86	1562			682	246	SLU 78	0.16	No
fin.	3	-740	-475.16	-3155			879	348	SLU 78	0.11	No
ini.	3	71	-12.32	1557			682	246	SLU 79	0.16	No
fin.	3	-736	-471.87	-3136			878	347	SLU 79	0.11	No
ini.	3	71	-12.39	1558			682	246	SLU 80	0.16	No
fin.	3	-737	-471.97	-3137			878	347	SLU 80	0.11	No
ini.	3	74	-11.79	1562			682	246	SLU 77	0.16	No
fin.	3	-740	-475.07	-3154			879	348	SLU 77	0.11	No
ini.	3	52	-16.63	1566			682	249	SLU 74	0.16	No
fin.	3	-739	-466.09	-3118			879	348	SLU 74	0.11	No
ini.	3	34	-20.13	1658			682	252	SLU 83	0.15	No
fin.	3	-785	-486.49	-3264			891	352	SLU 83	0.11	No
ini.	3	33	-20.21	1658			682	252	SLU 84	0.15	No
fin.	3	-785	-486.58	-3265			891	352	SLU 84	0.11	No

Verifiche a pressoflessione delle travi in muratura in combinazioni sismiche

Sezione	γM	N	M	Mu	Comb.	c.s.	Verifica
ini.	2	295	1261.34	1192.11	SLV 15	0.95	No
fin.	2	-3960	-1295.2	1192.11	SLV 15	0.92	No
ini.	2	6773	-969.48	1192.11	SLV 5	1.23	Si
fin.	2	10070	-150.44	1192.11	SLV 5	7.92	Si
ini.	2	4786	882.83	1192.11	SLV 13	1.35	Si
fin.	2	2316	-1383.63	1192.11	SLV 13	0.86	No
ini.	2	-218	-1287.49	1192.11	SLV 1	0.93	No
fin.	2	2981	672.31	1192.11	SLV 1	1.77	Si
ini.	2	-6695	943.33	1192.11	SLV 11	1.26	Si
fin.	2	-11049	-472.46	1192.11	SLV 11	2.52	Si
ini.	2	4786	882.83	1192.11	SLV 14	1.35	Si
fin.	2	2316	-1383.63	1192.11	SLV 14	0.86	No
ini.	2	295	1261.34	1192.11	SLV 16	0.95	No
fin.	2	-3960	-1295.2	1192.11	SLV 16	0.92	No
ini.	2	6773	-969.48	1192.11	SLV 6	1.23	Si
fin.	2	10070	-150.44	1192.11	SLV 6	7.92	Si
ini.	2	-218	-1287.49	1192.11	SLV 2	0.93	No
fin.	2	2981	672.31	1192.11	SLV 2	1.77	Si
ini.	2	-6695	943.33	1192.11	SLV 12	1.26	Si
fin.	2	-11049	-472.46	1192.11	SLV 12	2.52	Si

Verifiche a taglio delle travi in muratura secondo §C8.7.1.3.1 in combinazioni sismiche

Sezione	γM	N	M	V	Vt	Vp	Vt fess. diag.	Vt,lim	Comb.	c.s.	Verifica
ini.	2	6773	-969.48	2059			1022	0	SLV 5	0	No
fin.	2	10070	-150.44	130			1022	0	SLV 5	0	No
ini.	2	-218	-1287.49	3785			1081	415	SLV 2	0.11	No
fin.	2	2981	672.31	1597			1022	0	SLV 2	0	No
ini.	2	295	1261.34	-1667			1022	339	SLV 15	0.2	No
fin.	2	-3960	-1295.2	-5793			2078	768	SLV 15	0.13	No
ini.	2	8274	-318.38	459			1022	0	SLV 10	0	No
fin.	2	9871	-767.22	-1866			1022	0	SLV 10	0	No
ini.	2	4786	882.83	-1547			1022	0	SLV 13	0	No
fin.	2	2316	-1383.63	-5055			1022	0	SLV 13	0	No
ini.	2	4786	882.83	-1547			1022	0	SLV 14	0	No
fin.	2	2316	-1383.63	-5055			1022	0	SLV 14	0	No
ini.	2	-218	-1287.49	3785			1081	415	SLV 1	0.11	No
fin.	2	2981	672.31	1597			1022	0	SLV 1	0	No
ini.	2	295	1261.34	-1667			1022	339	SLV 16	0.2	No
fin.	2	-3960	-1295.2	-5793			2078	768	SLV 16	0.13	No
ini.	2	8274	-318.38	459			1022	0	SLV 9	0	No
fin.	2	9871	-767.22	-1866			1022	0	SLV 9	0	No
ini.	2	6773	-969.48	2059			1022	0	SLV 6	0	No
fin.	2	10070	-150.44	130			1022	0	SLV 6	0	No

Tabella dei coefficienti di sicurezza minimi

Stato limite	Coeff.s.	Comb.	Verifica
PF_SLV	0.862	SLV 13	No
V_SLV	0	SLV 1	No
PF_SLU	1.633	SLU 84	Si
V_SLU	0.108	SLU 84	No

Trave di accoppiamento 22

Verifiche condotte secondo D.M. 17-01-18 (N.T.C.)

Dati geometrici

X ini.	Y ini.	Z ini.inf.	Z ini.sup.	H ini.	X fin.	Y fin.	Z fin.inf.	Z fin.sup	H fin.	Luce	Spessore	R. Trazione
-9.728	1.271	0.53	1.32	0.79	-9.728	2.201	0.53	1.32	0.79	0.93	0.3	30000

Caratteristiche del materiale

(Circolare 7 21-01-19 C8.5.I) Muratura in mattoni pieni e malta di calce LC2_Corti

fb_	fhk	fvk0	fhmedio	τ0	fv0	μ	ϕ	fvk,lim	E	G	FC
120000			172500	9000	20000	0.577	0.767	6500	320000000	128000000	1.2

Verifiche a pressoflessione delle travi in muratura in combinazioni non sismiche

Sezione	γM	N	M	Mu	Comb.	c.s.	Verifica
ini.	3	1133	-103.61	949.92	SLU 83	9.17	Si
fin.	3	160	-5300.57	949.92	SLU 83	0.18	No
ini.	3	1105	-101.74	949.92	SLU 80	9.34	Si
fin.	3	159	-5152.17	949.92	SLU 80	0.18	No
ini.	3	1110	-101.68	949.92	SLU 81	9.34	Si
fin.	3	157	-5198.7	949.92	SLU 81	0.18	No
ini.	3	1092	-100.65	949.92	SLU 75	9.44	Si
fin.	3	158	-5091.41	949.92	SLU 75	0.19	No
ini.	3	1132	-103.76	949.92	SLU 84	9.16	Si
fin.	3	161	-5293.69	949.92	SLU 84	0.18	No
ini.	3	1115	-102.58	949.92	SLU 78	9.26	Si
fin.	3	161	-5193.27	949.92	SLU 78	0.18	No
ini.	3	1109	-101.83	949.92	SLU 82	9.33	Si
fin.	3	158	-5191.83	949.92	SLU 82	0.18	No
ini.	3	1093	-100.5	949.92	SLU 74	9.45	Si
fin.	3	157	-5098.28	949.92	SLU 74	0.19	No
ini.	3	1116	-102.43	949.92	SLU 77	9.27	Si
fin.	3	160	-5200.15	949.92	SLU 77	0.18	No
ini.	3	1106	-101.6	949.92	SLU 79	9.35	Si
fin.	3	158	-5159.04	949.92	SLU 79	0.18	No

Verifiche a taglio delle travi in muratura secondo §C8.7.1.3.1 in combinazioni non sismiche

Sezione	γM	N	M	V	Vt	Vp	Vt fess. diag.	Vt,lim	Comb.	c.s.	Verifica
ini.	3	969	-90.47	-2263			775	0	SLU 55	0	No
fin.	3	145	-4506.81	-6731			775	264	SLU 55	0.04	No
ini.	3	979	-91.2	-2289			775	0	SLU 54	0	No
fin.	3	146	-4552.5	-6798			775	264	SLU 54	0.04	No
ini.	3	992	-92.3	-2321			775	0	SLU 59	0	No
fin.	3	147	-4613.26	-6886			775	263	SLU 59	0.04	No
ini.	3	1002	-93.13	-2344			775	0	SLU 57	0	No
fin.	3	148	-4654.36	-6945			775	263	SLU 57	0.04	No
ini.	3	980	-91.06	-2293			775	0	SLU 53	0	No
fin.	3	145	-4559.37	-6808			775	264	SLU 53	0.04	No
ini.	3	969	-87.99	-2330			775	0	SLU 42	0	No
fin.	3	134	-4547.7	-6737			775	266	SLU 42	0.04	No
ini.	3	993	-92.15	-2326			775	0	SLU 58	0	No
fin.	3	146	-4620.13	-6897			775	263	SLU 58	0.04	No
ini.	3	1003	-92.99	-2348			775	0	SLU 56	0	No
fin.	3	147	-4661.24	-6956			775	263	SLU 56	0.04	No
ini.	3	998	-92.24	-2347			775	0	SLU 60	0	No
fin.	3	144	-4659.79	-6952			775	264	SLU 60	0.04	No
ini.	3	997	-92.38	-2343			775	0	SLU 61	0	No
fin.	3	145	-4652.92	-6941			775	264	SLU 61	0.04	No

Verifiche a pressoflessione delle travi in muratura in combinazioni sismiche

Sezione	γM	N	M	Mu	Comb.	c.s.	Verifica
ini.	2	91	149.17	1424.88	SLV 16	9.55	Si
fin.	2	18	-3367.19	1424.88	SLV 16	0.42	No
ini.	2	91	149.17	1424.88	SLV 15	9.55	Si
fin.	2	18	-3367.19	1424.88	SLV 15	0.42	No
ini.	2	437	51.73	1424.88	SLV 3	27.54	Si
fin.	2	-19	-4709.58	1424.88	SLV 3	0.3	No
ini.	2	-785	480.43	1424.88	SLV 8	2.97	Si
fin.	2	-265	-5685.55	1424.88	SLV 8	0.25	No
ini.	2	-889	509.66	1424.88	SLV 11	2.8	Si
fin.	2	-253	-5282.83	1424.88	SLV 11	0.27	No
ini.	2	1381	-286.49	1424.88	SLV 2	4.97	Si
fin.	2	202	-3470.32	1424.88	SLV 2	0.41	No
ini.	2	437	51.73	1424.88	SLV 4	27.54	Si
fin.	2	-19	-4709.58	1424.88	SLV 4	0.3	No
ini.	2	1381	-286.49	1424.88	SLV 1	4.97	Si
fin.	2	202	-3470.32	1424.88	SLV 1	0.41	No
ini.	2	-889	509.66	1424.88	SLV 12	2.8	Si
fin.	2	-253	-5282.83	1424.88	SLV 12	0.27	No
ini.	2	-785	480.43	1424.88	SLV 7	2.97	Si
fin.	2	-265	-5685.55	1424.88	SLV 7	0.25	No

Verifiche a taglio delle travi in muratura secondo §C8.7.1.3.1 in combinazioni sismiche

Sezione	γM	N	M	V	Vt	Vp	Vt fess. diag.	Vt,lim	Comb.	c.s.	Verifica
ini.	2	-785	480.43	-3033			1430	564	SLV 8	0.19	No
fin.	2	-265	-5685.55	-8949			1253	484	SLV 8	0.05	No
ini.	2	2257	-617.76	-398			1163	0	SLV 9	0	No
fin.	2	485	-1151.96	-1269			1163	336	SLV 9	0.27	No
ini.	2	2361	-646.99	-735			1163	0	SLV 6	0	No
fin.	2	474	-1554.68	-1884			1163	339	SLV 6	0.18	No
ini.	2	1381	-286.49	-1934			1163	0	SLV 1	0	No
fin.	2	202	-3470.32	-5075			1163	399	SLV 1	0.08	No
ini.	2	-889	509.66	-2696			1465	579	SLV 12	0.21	No

Sezione	γM	N	M	V	Vt	Vp	Vt fess. diag.	Vt,lim	Comb.	c.s.	Verifica
fin.	2	-253	-5282.83	-8334			1249	482	SLV 12	0.06	No
ini.	2	-889	509.66	-2696			1465	579	SLV 11	0.21	No
fin.	2	-253	-5282.83	-8334			1249	482	SLV 11	0.06	No
ini.	2	2361	-646.99	-735			1163	0	SLV 5	0	No
fin.	2	474	-1554.68	-1884			1163	339	SLV 5	0.18	No
ini.	2	1381	-286.49	-1934			1163	0	SLV 2	0	No
fin.	2	202	-3470.32	-5075			1163	399	SLV 2	0.08	No
ini.	2	-785	480.43	-3033			1430	564	SLV 7	0.19	No
fin.	2	-265	-5685.55	-8949			1253	484	SLV 7	0.05	No
ini.	2	2257	-617.76	-398			1163	0	SLV 10	0	No
fin.	2	485	-1151.96	-1269			1163	336	SLV 10	0.27	No

Tabella dei coefficienti di sicurezza minimi

Stato limite	Coeff.s.	Comb.	Verifica
PF_SLV	0.251	SLV 7	No
V_SLV	0	SLV 1	No
PF_SLU	0.179	SLU 83	No
V_SLU	0	SLU 11	No

Trave di accoppiamento 23

Verifiche condotte secondo D.M. 17-01-18 (N.T.C.)

Dati geometrici

X ini.	Y ini.	Z ini.inf.	Z ini.sup.	H ini.	X fin.	Y fin.	Z fin.inf.	Z fin.sup	H fin.	Luce	Spessore	R. Trazione
-10.472	-3.288	0.38	1.32	0.94	-8.172	-3.288	0.38	1.32	0.94	2.3	0.45	30000

Caratteristiche del materiale

(Circolare 7 21-01-19 C8.5.I) Muratura in mattoni pieni e malta di calce LC2_Corti

fb_	fhk	fvk0	fhmedio	τ0	fv0	μ	ϕ	fvk,lim	E	G	FC
120000			172500	9000	20000	0.577	0.767	6500	320000000	128000000	1.2

Verifiche a pressoflessione delle travi in muratura in combinazioni non sismiche

Sezione	γM	N	M	Mu	Comb.	c.s.	Verifica
ini.	3	664	32.07	2017.34	SLU 84	62.91	Si
fin.	3	5259	-1011.31	2017.34	SLU 84	1.99	Si
ini.	3	665	30.62	2017.34	SLU 82	65.89	Si
fin.	3	5251	-1001.33	2017.34	SLU 82	2.01	Si
ini.	3	649	27.97	2017.34	SLU 76	72.11	Si
fin.	3	5023	-975.37	2017.34	SLU 76	2.07	Si
ini.	3	640	32.94	2017.34	SLU 80	61.24	Si
fin.	3	5026	-974.62	2017.34	SLU 80	2.07	Si
ini.	3	655	35.9	2017.34	SLU 81	56.2	Si
fin.	3	5243	-985.24	2017.34	SLU 81	2.05	Si
ini.	3	653	37.35	2017.34	SLU 83	54.02	Si
fin.	3	5252	-995.22	2017.34	SLU 83	2.03	Si
ini.	3	648	29.7	2017.34	SLU 75	67.93	Si
fin.	3	5047	-967.21	2017.34	SLU 75	2.09	Si
ini.	3	636	36.43	2017.34	SLU 77	55.38	Si
fin.	3	5048	-961.1	2017.34	SLU 77	2.1	Si
ini.	3	647	31.15	2017.34	SLU 78	64.77	Si
fin.	3	5055	-977.18	2017.34	SLU 78	2.06	Si
ini.	3	650	26.53	2017.34	SLU 73	76.05	Si
fin.	3	5014	-965.39	2017.34	SLU 73	2.09	Si

Verifiche a taglio delle travi in muratura secondo §C8.7.1.3.1 in combinazioni non sismiche

Sezione	γM	N	M	V	Vt	Vp	Vt fess. diag.	Vt,lim	Comb.	c.s.	Verifica
ini.	3	586	27.14	2926			1086	312	SLU 57	0.11	No
fin.	3	4557	-888.11	-2442			1086	0	SLU 57	0	No
ini.	3	587	25.69	2925			1086	312	SLU 54	0.11	No
fin.	3	4549	-878.14	-2424			1086	0	SLU 54	0	No
ini.	3	579	28.94	2912			1086	314	SLU 59	0.11	No
fin.	3	4528	-885.55	-2439			1086	0	SLU 59	0	No
ini.	3	575	32.42	2931			1086	314	SLU 56	0.11	No
fin.	3	4549	-872.03	-2432			1086	0	SLU 56	0	No
ini.	3	605	26.61	3106			1086	309	SLU 61	0.1	No
fin.	3	4753	-912.26	-2560			1086	0	SLU 61	0	No
ini.	3	568	34.22	2917			1086	316	SLU 58	0.11	No
fin.	3	4520	-869.46	-2429			1086	0	SLU 58	0	No
ini.	3	577	30.97	2929			1086	314	SLU 53	0.11	No
fin.	3	4541	-862.05	-2413			1086	0	SLU 53	0	No
ini.	3	414	24.12	1987			1086	343	SLU 1	0.17	No
fin.	3	3161	-593.2	-1628			1086	0	SLU 1	0	No
ini.	3	594	31.89	3110			1086	311	SLU 60	0.1	No
fin.	3	4745	-896.17	-2550			1086	0	SLU 60	0	No
ini.	3	588	23.97	2908			1086	312	SLU 55	0.11	No
fin.	3	4525	-886.3	-2427			1086	0	SLU 55	0	No

Verifiche a pressoflessione delle travi in muratura in combinazioni sismiche

Sezione	γM	N	M	Mu	Comb.	c.s.	Verifica
ini.	2	2386	-640.95	3026.01	SLV 3	4.72	Si
fin.	2	4263	535.23	3026.01	SLV 3	5.65	Si
ini.	2	1149	292.15	3026.01	SLV 5	10.36	Si
fin.	2	5742	-1353.98	3026.01	SLV 5	2.23	Si
ini.	2	1149	292.15	3026.01	SLV 6	10.36	Si
fin.	2	5742	-1353.98	3026.01	SLV 6	2.23	Si

Sezione	γM	N	M	Mu	Comb.	c.s.	Verifica
ini.	2	-35	615.07	3026.01	SLV 9	4.92	Si
fin.	2	4927	-1889.97	3026.01	SLV 9	1.6	Si
ini.	2	-1493	692.25	3026.01	SLV 13	4.37	Si
fin.	2	2667	-1834.76	3026.01	SLV 13	1.65	Si
ini.	2	-35	615.07	3026.01	SLV 10	4.92	Si
fin.	2	4927	-1889.97	3026.01	SLV 10	1.6	Si
ini.	2	-1493	692.25	3026.01	SLV 14	4.37	Si
fin.	2	2667	-1834.76	3026.01	SLV 14	1.65	Si
ini.	2	2386	-640.95	3026.01	SLV 4	4.72	Si
fin.	2	4263	535.23	3026.01	SLV 4	5.65	Si
ini.	2	-1559	435.47	3026.01	SLV 15	6.95	Si
fin.	2	1546	-1251.43	3026.01	SLV 15	2.42	Si
ini.	2	-1559	435.47	3026.01	SLV 16	6.95	Si
fin.	2	1546	-1251.43	3026.01	SLV 16	2.42	Si

Verifiche a taglio delle travi in muratura secondo §C8.7.1.3.1 in combinazioni sismiche

Sezione	γM	N	M	V	Vt	Vp	Vt fess. diag.	Vt,lim	Comb.	c.s.	Verifica
ini.	2	2452	-384.18	3960			1629	0	SLV 1	0	No
fin.	2	5384	-48.1	-661			1629	0	SLV 1	0	No
ini.	2	2452	-384.18	3960			1629	0	SLV 2	0	No
fin.	2	5384	-48.1	-661			1629	0	SLV 2	0	No
ini.	2	-1493	692.25	596			2027	801	SLV 13	1.34	Si
fin.	2	2667	-1834.76	-3576			1629	0	SLV 13	0	No
ini.	2	1149	292.15	2912			1629	414	SLV 6	0.14	No
fin.	2	5742	-1353.98	-2394			1629	0	SLV 6	0	No
ini.	2	-35	615.07	1903			1638	618	SLV 9	0.32	No
fin.	2	4927	-1889.97	-3268			1629	0	SLV 9	0	No
ini.	2	-1493	692.25	596			2027	801	SLV 14	1.34	Si
fin.	2	2667	-1834.76	-3576			1629	0	SLV 14	0	No
ini.	2	-35	615.07	1903			1638	618	SLV 10	0.32	No
fin.	2	4927	-1889.97	-3268			1629	0	SLV 10	0	No
ini.	2	2386	-640.95	3849			1629	0	SLV 4	0	No
fin.	2	4263	535.23	-50			1629	0	SLV 4	0	No
ini.	2	2386	-640.95	3849			1629	0	SLV 3	0	No
fin.	2	4263	535.23	-50			1629	0	SLV 3	0	No
ini.	2	1149	292.15	2912			1629	414	SLV 5	0.14	No
fin.	2	5742	-1353.98	-2394			1629	0	SLV 5	0	No

Tabella dei coefficienti di sicurezza minimi

Stato limite	Coeff.s.	Comb.	Verifica
PF_SLV	1.601	SLV 9	Si
V_SLV	0	SLV 1	No
PF_SLU	1.995	SLU 84	Si
V_SLU	0	SLU 1	No

Trave di accoppiamento 24

Verifiche condotte secondo D.M. 17-01-18 (N.T.C.)

Dati geometrici

X ini.	Y ini.	Z ini.inf.	Z ini.sup.	H ini.	X fin.	Y fin.	Z fin.inf.	Z fin.sup	H fin.	Luce	Spessore	R. Trazione
-7.492	-3.288	-1.67	0.33	2	-6.497	-3.288	-1.67	0.33	2	0.995	0.45	30000

Caratteristiche del materiale

(Circolare 7 21-01-19 C8.5.I) Muratura in mattoni pieni e malta di calce LC2_Corti

fb_	fhk	fvk0	fhmedio	τ0	fv0	μ	ϕ	fvk,lim	E	G	FC
120000			172500	9000	20000	0.577	0.767	6500	320000000	128000000	1.2

Verifiche a pressoflessione delle travi in muratura in combinazioni non sismiche

Sezione	γM	N	M	Mu	Comb.	c.s.	Verifica
ini.	3	-952	-4315.82	9132.35	SLU 83	2.12	Si
fin.	3	-2071	-1165.86	9132.35	SLU 83	7.83	Si
ini.	3	-1072	-4458.18	9132.35	SLU 82	2.05	Si
fin.	3	-2375	-1025.23	9132.35	SLU 82	8.91	Si
ini.	3	-1047	-4288.71	9132.35	SLU 78	2.13	Si
fin.	3	-2277	-1011.37	9132.35	SLU 78	9.03	Si
ini.	3	-881	-4195.29	9132.35	SLU 74	2.18	Si
fin.	3	-1979	-1120.21	9132.35	SLU 74	8.15	Si
ini.	3	-1096	-4433.71	9132.35	SLU 84	2.06	Si
fin.	3	-2372	-1041.13	9132.35	SLU 84	8.77	Si
ini.	3	-1112	-4372.08	9132.35	SLU 73	2.09	Si
fin.	3	-2482	-892.37	9132.35	SLU 73	10.23	Si
ini.	3	-1064	-4244.54	9132.35	SLU 80	2.15	Si
fin.	3	-2276	-1007.32	9132.35	SLU 80	9.07	Si
ini.	3	-1024	-4313.18	9132.35	SLU 75	2.12	Si
fin.	3	-2280	-995.48	9132.35	SLU 75	9.17	Si
ini.	3	-929	-4340.29	9132.35	SLU 81	2.1	Si
fin.	3	-2074	-1149.96	9132.35	SLU 81	7.94	Si
ini.	3	-1136	-4347.61	9132.35	SLU 76	2.1	Si
fin.	3	-2480	-908.27	9132.35	SLU 76	10.05	Si

Verifiche a taglio delle travi in muratura secondo §C8.7.1.3.1 in combinazioni non sismiche

Sezione	γM	N	M	V	Vt	Vp	Vt fess. diag.	Vt,lim	Comb.	c.s.	Verifica
ini.	3	-1096	-4433.71	469			3904	1524	SLU 84	3.25	Si
fin.	3	-2372	-1041.13	12199			4415	1745	SLU 84	0.14	No
ini.	3	-1064	-4244.54	426			3892	1518	SLU 80	3.57	Si

Sezione	γM	N	M	V	Vt	Vp	Vt fess. diag.	Vt,lim	Comb.	c.s.	Verifica
fin.	3	-2276	-1007.32	11708			4377	1730	SLU 80	0.15	No
ini.	3	-1136	-4347.61	647			3920	1531	SLU 76	2.37	Si
fin.	3	-2480	-908.27	12223			4458	1763	SLU 76	0.14	No
ini.	3	-1024	-4313.18	543			3876	1511	SLU 75	2.78	Si
fin.	3	-2280	-995.48	11837			4378	1730	SLU 75	0.15	No
ini.	3	-881	-4195.29	338			3818	1483	SLU 74	4.39	Si
fin.	3	-1979	-1120.21	11115			4258	1680	SLU 74	0.15	No
ini.	3	-1047	-4288.71	458			3885	1515	SLU 78	3.3	Si
fin.	3	-2277	-1011.37	11804			4377	1730	SLU 78	0.15	No
ini.	3	-1072	-4458.18	553			3895	1520	SLU 82	2.75	Si
fin.	3	-2375	-1025.23	12232			4416	1746	SLU 82	0.14	No
ini.	3	-929	-4340.29	348			3838	1493	SLU 81	4.29	Si
fin.	3	-2074	-1149.96	11509			4296	1696	SLU 81	0.15	No
ini.	3	-952	-4315.82	263			3847	1497	SLU 83	5.69	Si
fin.	3	-2071	-1165.86	11476			4294	1696	SLU 83	0.15	No
ini.	3	-1112	-4372.08	732			3911	1527	SLU 73	2.09	Si
fin.	3	-2482	-892.37	12256			4459	1763	SLU 73	0.14	No

Verifiche a pressoflessione delle travi in muratura in combinazioni sismiche

Sezione	γM	N	M	Mu	Comb.	c.s.	Verifica
ini.	2	1374	-6991.7	13698.53	SLV 5	1.96	Si
fin.	2	-3803	1252.71	13698.53	SLV 5	10.94	Si
ini.	2	2983	-9512.13	13698.53	SLV 2	1.44	Si
fin.	2	-2741	814.55	13698.53	SLV 2	16.82	Si
ini.	2	2391	-8142.39	13698.53	SLV 3	1.68	Si
fin.	2	-1416	-204.78	13698.53	SLV 3	66.89	Si
ini.	2	-4179	3624.64	13698.53	SLV 16	3.78	Si
fin.	2	-31	-2350.68	13698.53	SLV 16	5.83	Si
ini.	2	-4179	3624.64	13698.53	SLV 15	3.78	Si
fin.	2	-31	-2350.68	13698.53	SLV 15	5.83	Si
ini.	2	2391	-8142.39	13698.53	SLV 4	1.68	Si
fin.	2	-1416	-204.78	13698.53	SLV 4	66.89	Si
ini.	2	1374	-6991.7	13698.53	SLV 6	1.96	Si
fin.	2	-3803	1252.71	13698.53	SLV 6	10.94	Si
ini.	2	2983	-9512.13	13698.53	SLV 1	1.44	Si
fin.	2	-2741	814.55	13698.53	SLV 1	16.82	Si
ini.	2	-597	-3461.59	13698.53	SLV 10	3.96	Si
fin.	2	-3387	608.94	13698.53	SLV 10	22.5	Si
ini.	2	-597	-3461.59	13698.53	SLV 9	3.96	Si
fin.	2	-3387	608.94	13698.53	SLV 9	22.5	Si

Verifiche a taglio delle travi in muratura secondo §C8.7.1.3.1 in combinazioni sismiche

Sezione	γM	N	M	V	Vt	Vp	Vt fess. diag.	Vt,lim	Comb.	c.s.	Verifica
ini.	2	2391	-8142.39	10199			5199	1339	SLV 4	0.13	No
fin.	2	-1416	-204.78	17298			5765	2243	SLV 4	0.13	No
ini.	2	2983	-9512.13	10980			5199	1136	SLV 1	0.1	No
fin.	2	-2741	814.55	21585			6296	2482	SLV 1	0.11	No
ini.	2	2983	-9512.13	10980			5199	1136	SLV 2	0.1	No
fin.	2	-2741	814.55	21585			6296	2482	SLV 2	0.11	No
ini.	2	1374	-6991.7	4725			5199	1631	SLV 6	0.35	No
fin.	2	-3803	1252.71	18414			6720	2658	SLV 6	0.14	No
ini.	2	-597	-3461.59	-1419			5438	2082	SLV 10	1.47	Si
fin.	2	-3387	608.94	11411			6554	2590	SLV 10	0.23	No
ini.	2	-4179	3624.64	-10280			6870	2717	SLV 16	0.26	No
fin.	2	-31	-2350.68	-6046			5211	1963	SLV 16	0.32	No
ini.	2	2391	-8142.39	10199			5199	1339	SLV 3	0.13	No
fin.	2	-1416	-204.78	17298			5765	2243	SLV 3	0.13	No
ini.	2	-4179	3624.64	-10280			6870	2717	SLV 15	0.26	No
fin.	2	-31	-2350.68	-6046			5211	1963	SLV 15	0.32	No
ini.	2	-597	-3461.59	-1419			5438	2082	SLV 9	1.47	Si
fin.	2	-3387	608.94	11411			6554	2590	SLV 9	0.23	No
ini.	2	1374	-6991.7	4725			5199	1631	SLV 5	0.35	No
fin.	2	-3803	1252.71	18414			6720	2658	SLV 5	0.14	No

Tabella dei coefficienti di sicurezza minimi

Stato limite	Coeff.s.	Comb.	Verifica
PF_SLV	1.44	SLV 1	Si
V_SLV	0.103	SLV 1	No
PF_SLU	2.048	SLU 82	Si
V_SLU	0.143	SLU 82	No

Trave di accoppiamento 25

Verifiche condotte secondo D.M. 17-01-18 (N.T.C.)

Dati geometrici

X ini.	Y ini.	Z ini.inf.	Z ini.sup.	H ini.	X fin.	Y fin.	Z fin.inf.	Z fin.sup	H fin.	Luce	Spessore	R. Trazione
-7.492	-3.288	0.73	1.32	0.59	-6.497	-3.288	0.73	1.32	0.59	0.995	0.45	30000

Caratteristiche del materiale

(Circolare 7 21-01-19 C8.5.I) Muratura in mattoni pieni e malta di calce LC2_Corti

fb_	fhk	fvk0	fhmedio	τ0	fv0	μ	ϕ	fvk,lim	E	G	FC
120000			172500	9000	20000	0.577	0.767	6500	320000000	128000000	1.2

Verifiche a pressoflessione delle travi in muratura in combinazioni non sismiche

Sezione	γM	N	M	Mu	Comb.	c.s.	Verifica

Sezione	γM	N	M	Mu	Comb.	c.s.	Verifica
ini.	3	2339	34.94	794.74	SLU 44	22.75	Si
fin.	3	1984	237.57	794.74	SLU 44	3.35	Si
ini.	3	3111	44.66	794.74	SLU 76	17.8	Si
fin.	3	2660	232.21	794.74	SLU 76	3.42	Si
ini.	3	2142	36.55	794.74	SLU 23	21.74	Si
fin.	3	1734	219.11	794.74	SLU 23	3.63	Si
ini.	3	3119	37.28	794.74	SLU 73	21.32	Si
fin.	3	2713	237.33	794.74	SLU 73	3.35	Si
ini.	3	2757	37.87	794.74	SLU 52	20.99	Si
fin.	3	2359	233.56	794.74	SLU 52	3.4	Si
ini.	3	2331	42.32	794.74	SLU 47	18.78	Si
fin.	3	1931	232.45	794.74	SLU 47	3.42	Si
ini.	3	2693	41.73	794.74	SLU 68	19.04	Si
fin.	3	2285	236.22	794.74	SLU 68	3.36	Si
ini.	3	2701	34.35	794.74	SLU 65	23.14	Si
fin.	3	2338	241.34	794.74	SLU 65	3.29	Si
ini.	3	1780	37.14	794.74	SLU 2	21.4	Si
fin.	3	1379	215.33	794.74	SLU 2	3.69	Si
ini.	3	2749	45.25	794.74	SLU 55	17.56	Si
fin.	3	2306	228.44	794.74	SLU 55	3.48	Si

Verifiche a taglio delle travi in muratura secondo §C8.7.1.3.1 in combinazioni non sismiche

Sezione	γM	N	M	V	Vt	Vp	Vt fess. diag.	Vt,lim	Comb.	c.s.	Verifica
ini.	3	2961	32.45	2539			682	0	SLU 57	0	No
fin.	3	2713	171.74	-3079			682	0	SLU 57	0	No
ini.	3	3134	21.06	2681			682	0	SLU 61	0	No
fin.	3	2937	177.08	-3201			682	0	SLU 61	0	No
ini.	3	3266	-2.03	2599			682	0	SLU 53	0	No
fin.	3	3391	94.71	-3017			682	0	SLU 53	0	No
ini.	3	3259	5.36	2585			682	0	SLU 56	0	No
fin.	3	3338	89.59	-3056			682	0	SLU 56	0	No
ini.	3	2749	45.25	2499			682	0	SLU 55	0	No
fin.	3	2306	228.44	-3049			682	0	SLU 55	0	No
ini.	3	3431	-6.04	2727			682	0	SLU 60	0	No
fin.	3	3561	94.93	-3178			682	0	SLU 60	0	No
ini.	3	3237	7.47	2562			682	0	SLU 58	0	No
fin.	3	3294	86.4	-3051			682	0	SLU 58	0	No
ini.	3	2969	25.07	2553			682	0	SLU 54	0	No
fin.	3	2766	176.86	-3039			682	0	SLU 54	0	No
ini.	3	2276	-8.02	1819			682	0	SLU 1	0	No
fin.	3	2421	78.43	-2014			682	0	SLU 1	0	No
ini.	3	2940	34.57	2516			682	0	SLU 59	0	No
fin.	3	2669	168.55	-3073			682	0	SLU 59	0	No

Verifiche a pressoflessione delle travi in muratura in combinazioni sismiche

Sezione	γM	N	M	Mu	Comb.	c.s.	Verifica
ini.	2	3773	-890.76	1192.11	SLV 2	1.34	Si
fin.	2	9300	1311.31	1192.11	SLV 2	0.91	No
ini.	2	1765	-429.82	1192.11	SLV 10	2.77	Si
fin.	2	-1743	1843.65	1192.11	SLV 10	0.65	No
ini.	2	3232	415.12	1192.11	SLV 7	2.87	Si
fin.	2	7001	-1686.94	1192.11	SLV 7	0.71	No
ini.	2	2410	831.63	1192.11	SLV 11	1.43	Si
fin.	2	2607	-2074.11	1192.11	SLV 11	0.57	No
ini.	2	3773	-890.76	1192.11	SLV 1	1.34	Si
fin.	2	9300	1311.31	1192.11	SLV 1	0.91	No
ini.	2	3232	415.12	1192.11	SLV 8	2.87	Si
fin.	2	7001	-1686.94	1192.11	SLV 8	0.71	No
ini.	2	2587	-846.33	1192.11	SLV 5	1.41	Si
fin.	2	2651	2230.83	1192.11	SLV 5	0.53	No
ini.	2	2410	831.63	1192.11	SLV 12	1.43	Si
fin.	2	2607	-2074.11	1192.11	SLV 12	0.57	No
ini.	2	1765	-429.82	1192.11	SLV 9	2.77	Si
fin.	2	-1743	1843.65	1192.11	SLV 9	0.65	No
ini.	2	2587	-846.33	1192.11	SLV 6	1.41	Si
fin.	2	2651	2230.83	1192.11	SLV 6	0.53	No

Verifiche a taglio delle travi in muratura secondo §C8.7.1.3.1 in combinazioni sismiche

Sezione	γM	N	M	V	Vt	Vp	Vt fess. diag.	Vt,lim	Comb.	c.s.	Verifica
ini.	2	1765	-429.82	2352			1022	0	SLV 9	0	No
fin.	2	-1743	1843.65	-2761			1487	585	SLV 9	0.21	No
ini.	2	3966	-512.32	4417			1022	0	SLV 4	0	No
fin.	2	10605	135.98	674			1022	0	SLV 4	0	No
ini.	2	3232	415.12	1626			1022	0	SLV 8	0	No
fin.	2	7001	-1686.94	-1755			1022	0	SLV 8	0	No
ini.	2	2587	-846.33	4025			1022	0	SLV 6	0	No
fin.	2	2651	2230.83	-927			1022	0	SLV 6	0	No
ini.	2	3773	-890.76	5137			1022	0	SLV 1	0	No
fin.	2	9300	1311.31	923			1022	0	SLV 1	0	No
ini.	2	2587	-846.33	4025			1022	0	SLV 5	0	No
fin.	2	2651	2230.83	-927			1022	0	SLV 5	0	No
ini.	2	1765	-429.82	2352			1022	0	SLV 10	0	No
fin.	2	-1743	1843.65	-2761			1487	585	SLV 10	0.21	No
ini.	2	3773	-890.76	5137			1022	0	SLV 2	0	No
fin.	2	9300	1311.31	923			1022	0	SLV 2	0	No
ini.	2	3966	-512.32	4417			1022	0	SLV 3	0	No
fin.	2	10605	135.98	674			1022	0	SLV 3	0	No
ini.	2	3232	415.12	1626			1022	0	SLV 7	0	No
fin.	2	7001	-1686.94	-1755			1022	0	SLV 7	0	No

Tabella dei coefficienti di sicurezza minimi

Stato limite	Coeff.s.	Comb.	Verifica
PF_SLV	0.534	SLV 5	No
V_SLV	0	SLV 1	No
PF_SLU	3.293	SLU 65	Si
V_SLU	0	SLU 1	No

Trave di accoppiamento 26

Verifiche condotte secondo D.M. 17-01-18 (N.T.C.)

Dati geometrici

X ini.	Y ini.	Z ini.inf.	Z ini.sup.	H ini.	X fin.	Y fin.	Z fin.inf.	Z fin.sup	H fin.	Luce	Spessore	R. Trazione
-3.197	-3.288	-1.67	0.33	2	-2.197	-3.288	-1.67	0.33	2	1	0.45	30000

Caratteristiche del materiale

(Circolare 7 21-01-19 C8.5.I) Muratura in mattoni pieni e malta di calce LC2_Corti

fb_	fhk	fvk0	fhmedio	τ0	fv0	μ	ϕ	fvk,lim	E	G	FC
120000			172500	9000	20000	0.577	0.767	6500	320000000	128000000	1.2

Verifiche a pressoflessione delle travi in muratura in combinazioni non sismiche

Sezione	γM	N	M	Mu	Comb.	c.s.	Verifica
ini.	3	-1518	-1333.31	9132.35	SLU 73	6.85	Si
fin.	3	-1215	-2027.32	9132.35	SLU 73	4.5	Si
ini.	3	-1564	-1317.59	9132.35	SLU 76	6.93	Si
fin.	3	-1213	-2053.33	9132.35	SLU 76	4.45	Si
ini.	3	-1886	-1155.14	9132.35	SLU 78	7.91	Si
fin.	3	-1589	-1848.85	9132.35	SLU 78	4.94	Si
ini.	3	-1881	-1213.97	9132.35	SLU 82	7.52	Si
fin.	3	-1654	-1846.85	9132.35	SLU 82	4.94	Si
ini.	3	-1886	-1145.66	9132.35	SLU 80	7.97	Si
fin.	3	-1577	-1841.59	9132.35	SLU 80	4.96	Si
ini.	3	-1926	-1198.25	9132.35	SLU 84	7.62	Si
fin.	3	-1652	-1872.86	9132.35	SLU 84	4.88	Si
ini.	3	-1362	-1255.75	9132.35	SLU 52	7.27	Si
fin.	3	-1071	-1905.32	9132.35	SLU 52	4.79	Si
ini.	3	-1407	-1240.03	9132.35	SLU 55	7.36	Si
fin.	3	-1069	-1931.33	9132.35	SLU 55	4.73	Si
ini.	3	-1319	-1247.27	9132.35	SLU 65	7.32	Si
fin.	3	-1044	-1893.68	9132.35	SLU 65	4.82	Si
ini.	3	-1364	-1231.55	9132.35	SLU 68	7.42	Si
fin.	3	-1042	-1919.69	9132.35	SLU 68	4.76	Si

Verifiche a taglio delle travi in muratura secondo §C8.7.1.3.1 in combinazioni non sismiche

Sezione	γM	N	M	V	Vt	Vp	Vt fess. diag.	Vt,lim	Comb.	c.s.	Verifica
ini.	3	-1564	-1317.59	-4681			4092	1609	SLU 76	0.34	No
fin.	3	-1213	-2053.33	3011			3951	1546	SLU 76	0.51	No
ini.	3	-1518	-1333.31	-4575			4073	1601	SLU 73	0.35	No
fin.	3	-1215	-2027.32	3077			3952	1546	SLU 73	0.5	No
ini.	3	-1841	-1170.86	-4475			4202	1657	SLU 75	0.37	No
fin.	3	-1591	-1822.84	3171			4103	1614	SLU 75	0.51	No
ini.	3	-1881	-1213.97	-4570			4218	1664	SLU 82	0.36	No
fin.	3	-1654	-1846.85	3359			4128	1625	SLU 82	0.48	No
ini.	3	-1886	-1145.66	-4580			4220	1665	SLU 80	0.36	No
fin.	3	-1577	-1841.59	3074			4097	1611	SLU 80	0.52	No
ini.	3	-1362	-1255.75	-4199			4011	1573	SLU 52	0.37	No
fin.	3	-1071	-1905.32	2777			3894	1519	SLU 52	0.55	No
ini.	3	-1364	-1231.55	-4213			4012	1573	SLU 68	0.37	No
fin.	3	-1042	-1919.69	2654			3883	1514	SLU 68	0.57	No
ini.	3	-1407	-1240.03	-4305			4029	1581	SLU 55	0.37	No
fin.	3	-1069	-1931.33	2711			3894	1519	SLU 55	0.56	No
ini.	3	-1926	-1198.25	-4675			4237	1671	SLU 84	0.36	No
fin.	3	-1652	-1872.86	3293			4127	1624	SLU 84	0.49	No
ini.	3	-1886	-1155.14	-4581			4221	1665	SLU 78	0.36	No
fin.	3	-1589	-1848.85	3105			4102	1613	SLU 78	0.52	No

Verifiche a pressoflessione delle travi in muratura in combinazioni sismiche

Sezione	γM	N	M	Mu	Comb.	c.s.	Verifica
ini.	2	2893	-3769.12	13698.53	SLV 1	3.63	Si
fin.	2	-2681	403.96	13698.53	SLV 1	33.91	Si
ini.	2	1254	-4308.34	13698.53	SLV 5	3.18	Si
fin.	2	349	-4001.9	13698.53	SLV 5	3.42	Si
ini.	2	-5052	648.5	13698.53	SLV 14	21.12	Si
fin.	2	1096	-4677.62	13698.53	SLV 14	2.93	Si
ini.	2	2893	-3769.12	13698.53	SLV 2	3.63	Si
fin.	2	-2681	403.96	13698.53	SLV 2	33.91	Si
ini.	2	-1130	-2983.05	13698.53	SLV 10	4.59	Si
fin.	2	1483	-5526.37	13698.53	SLV 10	2.48	Si
ini.	2	1254	-4308.34	13698.53	SLV 6	3.18	Si
fin.	2	349	-4001.9	13698.53	SLV 6	3.42	Si
ini.	2	-2008	1649.91	13698.53	SLV 8	8.3	Si
fin.	2	-4532	3504.69	13698.53	SLV 8	3.91	Si
ini.	2	-5052	648.5	13698.53	SLV 13	21.12	Si
fin.	2	1096	-4677.62	13698.53	SLV 13	2.93	Si
ini.	2	-1130	-2983.05	13698.53	SLV 9	4.59	Si
fin.	2	1483	-5526.37	13698.53	SLV 9	2.48	Si
ini.	2	-2008	1649.91	13698.53	SLV 7	8.3	Si

Sezione	γM	N	M	Mu	Comb.	c.s.	Verifica
fin.	2	-4532	3504.69	13698.53	SLV 7	3.91	Si

Verifiche a taglio delle travi in muratura secondo §C8.7.1.3.1 in combinazioni sismiche

Sezione	γM	N	M	V	Vt	Vp	Vt fess. diag.	Vt,lim	Comb.	c.s.	Verifica
ini.	2	-5052	648.5	-13917			7220	2851	SLV 14	0.2	No
fin.	2	1096	-4677.62	-6091			5199	1702	SLV 14	0.28	No
ini.	2	-6031	2435.98	-13564			7611	2993	SLV 16	0.22	No
fin.	2	-369	-2425.64	-7884			5347	2035	SLV 16	0.26	No
ini.	2	1914	-1981.64	8290			5199	1483	SLV 4	0.18	No
fin.	2	-4146	2655.94	10840			6857	2712	SLV 4	0.25	No
ini.	2	-6031	2435.98	-13564			7611	2993	SLV 15	0.22	No
fin.	2	-369	-2425.64	-7884			5347	2035	SLV 15	0.26	No
ini.	2	-5052	648.5	-13917			7220	2851	SLV 13	0.2	No
fin.	2	1096	-4677.62	-6091			5199	1702	SLV 13	0.28	No
ini.	2	1254	-4308.34	-125			5199	1662	SLV 6	13.3	Si
fin.	2	349	-4001.9	8172			5199	1879	SLV 6	0.23	No
ini.	2	1914	-1981.64	8290			5199	1483	SLV 3	0.18	No
fin.	2	-4146	2655.94	10840			6857	2712	SLV 3	0.25	No
ini.	2	2893	-3769.12	7937			5199	1169	SLV 2	0.15	No
fin.	2	-2681	403.96	12633			6272	2472	SLV 2	0.2	No
ini.	2	2893	-3769.12	7937			5199	1169	SLV 1	0.15	No
fin.	2	-2681	403.96	12633			6272	2472	SLV 1	0.2	No
ini.	2	1254	-4308.34	-125			5199	1662	SLV 5	13.3	Si
fin.	2	349	-4001.9	8172			5199	1879	SLV 5	0.23	No

Tabella dei coefficienti di sicurezza minimi

Stato limite	Coeff.s.	Comb.	Verifica
PF_SLV	2.479	SLV 9	Si
V_SLV	0.147	SLV 1	No
PF_SLU	4.448	SLU 76	Si
V_SLU	0.344	SLU 76	No

Trave di accoppiamento 27

Verifiche condotte secondo D.M. 17-01-18 (N.T.C.)

Dati geometrici

X ini.	Y ini.	Z ini.inf.	Z ini.sup.	H ini.	X fin.	Y fin.	Z fin.inf.	Z fin.sup	H fin.	Luce	Spessore	R. Trazione
-3.197	-3.288	0.73	1.32	0.59	-2.197	-3.288	0.73	1.32	0.59	1	0.45	30000

Caratteristiche del materiale

(Circolare 7 21-01-19 C8.5.I) Muratura in mattoni pieni e malta di calce LC2_Corti

fb_	fhk	fvk0	fhmedio	τ0	fv0	μ	ϕ	fvk,lim	E	G	FC
120000			172500	9000	20000	0.577	0.767	6500	320000000	128000000	1.2

Verifiche a pressoflessione delle travi in muratura in combinazioni non sismiche

Sezione	γM	N	M	Mu	Comb.	c.s.	Verifica
ini.	3	2903	-39.36	794.74	SLU 55	20.19	Si
fin.	3	2705	-248.42	794.74	SLU 55	3.2	Si
ini.	3	2712	-37.7	794.74	SLU 34	21.08	Si
fin.	3	2518	-243.36	794.74	SLU 34	3.27	Si
ini.	3	3004	-54.14	794.74	SLU 73	14.68	Si
fin.	3	2807	-255.11	794.74	SLU 73	3.12	Si
ini.	3	3025	-46.05	794.74	SLU 76	17.26	Si
fin.	3	2815	-264.57	794.74	SLU 76	3	Si
ini.	3	2551	-41.74	794.74	SLU 78	19.04	Si
fin.	3	2367	-229.62	794.74	SLU 78	3.46	Si
ini.	3	2918	-36.51	794.74	SLU 68	21.77	Si
fin.	3	2722	-245.16	794.74	SLU 68	3.24	Si
ini.	3	2691	-45.79	794.74	SLU 31	17.36	Si
fin.	3	2510	-233.9	794.74	SLU 31	3.4	Si
ini.	3	2533	-40.34	794.74	SLU 80	19.7	Si
fin.	3	2347	-230.37	794.74	SLU 80	3.45	Si
ini.	3	2897	-44.6	794.74	SLU 65	17.82	Si
fin.	3	2714	-235.7	794.74	SLU 65	3.37	Si
ini.	3	2882	-47.44	794.74	SLU 52	16.75	Si
fin.	3	2697	-238.96	794.74	SLU 52	3.33	Si

Verifiche a taglio delle travi in muratura secondo §C8.7.1.3.1 in combinazioni non sismiche

Sezione	γM	N	M	V	Vt	Vp	Vt fess. diag.	Vt,lim	Comb.	c.s.	Verifica
ini.	3	2415	-53.9	1223			682	0	SLU 61	0	No
fin.	3	2261	-203.6	-1428			682	0	SLU 61	0	No
ini.	3	1639	-46.69	1072			682	0	SLU 53	0	No
fin.	3	1535	-138.5	-1128			682	0	SLU 53	0	No
ini.	3	1646	-57.46	1149			682	0	SLU 60	0	No
fin.	3	1547	-138.1	-1172			682	0	SLU 60	0	No
ini.	3	1642	-37.21	1047			682	0	SLU 58	0	No
fin.	3	1523	-148.72	-1152			682	0	SLU 58	0	No
ini.	3	2411	-33.65	1121			682	0	SLU 59	0	No
fin.	3	2237	-214.22	-1408			682	0	SLU 59	0	No
ini.	3	1660	-38.61	1054			682	0	SLU 56	0	No
fin.	3	1543	-147.97	-1152			682	0	SLU 56	0	No
ini.	3	1181	-35.49	745			682	0	SLU 1	0	No
fin.	3	1117	-89.16	-758			682	0	SLU 1	0	No
ini.	3	2429	-35.05	1128			682	0	SLU 57	0	No
fin.	3	2257	-213.47	-1408			682	0	SLU 57	0	No

Sezione	γM	N	M	V	Vt	Vp	Vt fess. diag.	Vt,lim	Comb.	c.s.	Verifica
ini.	3	2903	-39.36	1188			682	0	SLU 55	0	No
fin.	3	2705	-248.42	-1554			682	0	SLU 55	0	No
ini.	3	2408	-43.13	1146			682	0	SLU 54	0	No
fin.	3	2248	-204.01	-1384			682	0	SLU 54	0	No

Verifiche a pressoflessione delle travi in muratura in combinazioni sismiche

Sezione	γM	N	M	Mu	Comb.	c.s.	Verifica
ini.	2	-2660	-1059.71	1192.11	SLV 4	1.12	Si
fin.	2	-1261	1169.94	1192.11	SLV 4	1.02	Si
ini.	2	-6	947.98	1192.11	SLV 16	1.26	Si
fin.	2	-1155	-1065.62	1192.11	SLV 16	1.12	Si
ini.	2	2498	-1028.23	1192.11	SLV 1	1.16	Si
fin.	2	3504	866.98	1192.11	SLV 1	1.38	Si
ini.	2	-6	947.98	1192.11	SLV 15	1.26	Si
fin.	2	-1155	-1065.62	1192.11	SLV 15	1.12	Si
ini.	2	10240	313.51	1192.11	SLV 10	3.8	Si
fin.	2	9133	-939.59	1192.11	SLV 10	1.27	Si
ini.	2	10240	313.51	1192.11	SLV 9	3.8	Si
fin.	2	9133	-939.59	1192.11	SLV 9	1.27	Si
ini.	2	5152	979.46	1192.11	SLV 14	1.22	Si
fin.	2	3611	-1368.58	1192.11	SLV 14	0.87	No
ini.	2	-2660	-1059.71	1192.11	SLV 3	1.12	Si
fin.	2	-1261	1169.94	1192.11	SLV 3	1.02	Si
ini.	2	2498	-1028.23	1192.11	SLV 2	1.16	Si
fin.	2	3504	866.98	1192.11	SLV 2	1.38	Si
ini.	2	5152	979.46	1192.11	SLV 13	1.22	Si
fin.	2	3611	-1368.58	1192.11	SLV 13	0.87	No

Verifiche a taglio delle travi in muratura secondo §C8.7.1.3.1 in combinazioni sismiche

Sezione	γM	N	M	V	Vt	Vp	Vt fess. diag.	Vt,lim	Comb.	c.s.	Verifica
ini.	2	-6	947.98	-1769			1024	386	SLV 15	0.22	No
fin.	2	-1155	-1065.62	-3266			1330	526	SLV 15	0.16	No
ini.	2	5152	979.46	-1541			1022	0	SLV 13	0	No
fin.	2	3611	-1368.58	-3681			1022	0	SLV 13	0	No
ini.	2	5152	979.46	-1541			1022	0	SLV 14	0	No
fin.	2	3611	-1368.58	-3681			1022	0	SLV 14	0	No
ini.	2	10240	313.51	459			1022	0	SLV 10	0	No
fin.	2	9133	-939.59	-2321			1022	0	SLV 10	0	No
ini.	2	10240	313.51	459			1022	0	SLV 9	0	No
fin.	2	9133	-939.59	-2321			1022	0	SLV 9	0	No
ini.	2	9443	-288.8	1947			1022	0	SLV 6	0	No
fin.	2	9101	-268.92	-742			1022	0	SLV 6	0	No
ini.	2	2498	-1028.23	3416			1022	0	SLV 1	0	No
fin.	2	3504	866.98	1585			1022	0	SLV 1	0	No
ini.	2	9443	-288.8	1947			1022	0	SLV 5	0	No
fin.	2	9101	-268.92	-742			1022	0	SLV 5	0	No
ini.	2	-6	947.98	-1769			1024	386	SLV 16	0.22	No
fin.	2	-1155	-1065.62	-3266			1330	526	SLV 16	0.16	No
ini.	2	2498	-1028.23	3416			1022	0	SLV 2	0	No
fin.	2	3504	866.98	1585			1022	0	SLV 2	0	No

Tabella dei coefficienti di sicurezza minimi

Stato limite	Coeff.s.	Comb.	Verifica
PF_SLV	0.871	SLV 13	No
V_SLV	0	SLV 1	No
PF_SLU	3.004	SLU 76	Si
V_SLU	0	SLU 1	No

Trave di accoppiamento 28

Verifiche condotte secondo D.M. 17-01-18 (N.T.C.)

Dati geometrici

X ini.	Y ini.	Z ini.inf.	Z ini.sup.	H ini.	X fin.	Y fin.	Z fin.inf.	Z fin.sup	H fin.	Luce	Spessore	R. Trazione
-2.913	5.876	-1.67	0.33	2	-1.913	5.876	-1.67	0.33	2	1	0.45	30000

Caratteristiche del materiale

(Circolare 7 21-01-19 C8.5.I) Muratura in mattoni pieni e malta di calce LC2_Corti

fb_	fhk	fvk0	fhmedio	τ0	fv0	μ	ϕ	fvk,lim	E	G	FC
120000			172500	9000	20000	0.577	0.767	6500	320000000	128000000	1.2

Verifiche a pressoflessione delle travi in muratura in combinazioni non sismiche

Sezione	γM	N	M	Mu	Comb.	c.s.	Verifica
ini.	3	-3581	-694.96	9132.35	SLU 74	13.14	Si
fin.	3	-3096	-1696.05	9132.35	SLU 74	5.38	Si
ini.	3	-3620	-627.57	9132.35	SLU 80	14.55	Si
fin.	3	-3054	-1764.84	9132.35	SLU 80	5.17	Si
ini.	3	-3666	-635.74	9132.35	SLU 77	14.36	Si
fin.	3	-3115	-1775.32	9132.35	SLU 77	5.14	Si
ini.	3	-3593	-776.89	9132.35	SLU 81	11.76	Si
fin.	3	-3148	-1680.91	9132.35	SLU 81	5.43	Si
ini.	3	-3649	-624.83	9132.35	SLU 79	14.62	Si
fin.	3	-3093	-1772.7	9132.35	SLU 79	5.15	Si
ini.	3	-3678	-717.67	9132.35	SLU 83	12.72	Si
fin.	3	-3166	-1760.18	9132.35	SLU 83	5.19	Si
ini.	3	-3516	-688.61	9132.35	SLU 76	13.26	Si

Sezione	γM	N	M	Mu	Comb.	c.s.	Verifica
fin.	3	-3009	-1680.33	9132.35	SLU 76	5.43	Si
ini.	3	-3553	-697.69	9132.35	SLU 75	13.09	Si
fin.	3	-3057	-1688.19	9132.35	SLU 75	5.41	Si
ini.	3	-3637	-638.47	9132.35	SLU 78	14.3	Si
fin.	3	-3075	-1767.46	9132.35	SLU 78	5.17	Si
ini.	3	-3649	-720.41	9132.35	SLU 84	12.68	Si
fin.	3	-3127	-1752.32	9132.35	SLU 84	5.21	Si

Verifiche a taglio delle travi in muratura secondo §C8.7.1.3.1 in combinazioni non sismiche

Sezione	γM	N	M	V	Vt	Vp	Vt fess. diag.	Vt,lim	Comb.	c.s.	Verifica
ini.	3	-3678	-717.67	-4694			4937	1946	SLU 83	0.41	No
fin.	3	-3166	-1760.18	1907			4732	1870	SLU 83	0.98	No
ini.	3	-3593	-776.89	-4450			4903	1934	SLU 81	0.43	No
fin.	3	-3148	-1680.91	2060			4725	1867	SLU 81	0.91	No
ini.	3	-3637	-638.47	-4715			4921	1940	SLU 78	0.41	No
fin.	3	-3075	-1767.46	1651			4696	1856	SLU 78	1.12	Si
ini.	3	-3553	-697.69	-4470			4887	1928	SLU 75	0.43	No
fin.	3	-3057	-1688.19	1804			4689	1853	SLU 75	1.03	Si
ini.	3	-3666	-635.74	-4735			4932	1944	SLU 77	0.41	No
fin.	3	-3115	-1775.32	1675			4712	1862	SLU 77	1.11	Si
ini.	3	-3581	-694.96	-4490			4899	1932	SLU 74	0.43	No
fin.	3	-3096	-1696.05	1828			4705	1859	SLU 74	1.02	Si
ini.	3	-3649	-624.83	-4729			4925	1942	SLU 79	0.41	No
fin.	3	-3093	-1772.7	1644			4703	1859	SLU 79	1.13	Si
ini.	3	-3620	-627.57	-4709			4914	1938	SLU 80	0.41	No
fin.	3	-3054	-1764.84	1620			4688	1853	SLU 80	1.14	Si
ini.	3	-3516	-688.61	-4451			4872	1922	SLU 76	0.43	No
fin.	3	-3009	-1680.33	1756			4670	1846	SLU 76	1.05	Si
ini.	3	-3649	-720.41	-4674			4926	1942	SLU 84	0.42	No
fin.	3	-3127	-1752.32	1883			4717	1864	SLU 84	0.99	No

Verifiche a pressoflessione delle travi in muratura in combinazioni sismiche

Sezione	γM	N	M	Mu	Comb.	c.s.	Verifica
ini.	2	4560	-2655.53	13698.53	SLV 9	5.16	Si
fin.	2	6832	-4830.2	13698.53	SLV 9	2.84	Si
ini.	2	1781	-4150.19	13698.53	SLV 1	3.3	Si
fin.	2	-1040	1154.64	13698.53	SLV 1	11.86	Si
ini.	2	5746	-4299.62	13698.53	SLV 5	3.19	Si
fin.	2	5980	-2961.31	13698.53	SLV 5	4.63	Si
ini.	2	-2173	1330.11	13698.53	SLV 14	10.3	Si
fin.	2	1800	-5074.98	13698.53	SLV 14	2.7	Si
ini.	2	4560	-2655.53	13698.53	SLV 10	5.16	Si
fin.	2	6832	-4830.2	13698.53	SLV 10	2.84	Si
ini.	2	5746	-4299.62	13698.53	SLV 6	3.19	Si
fin.	2	5980	-2961.31	13698.53	SLV 6	4.63	Si
ini.	2	-6757	3102.29	13698.53	SLV 16	4.42	Si
fin.	2	-3366	-3415.91	13698.53	SLV 16	4.01	Si
ini.	2	-2173	1330.11	13698.53	SLV 13	10.3	Si
fin.	2	1800	-5074.98	13698.53	SLV 13	2.7	Si
ini.	2	-6757	3102.29	13698.53	SLV 15	4.42	Si
fin.	2	-3366	-3415.91	13698.53	SLV 15	4.01	Si
ini.	2	1781	-4150.19	13698.53	SLV 2	3.3	Si
fin.	2	-1040	1154.64	13698.53	SLV 2	11.86	Si

Verifiche a taglio delle travi in muratura secondo §C8.7.1.3.1 in combinazioni sismiche

Sezione	γM	N	M	V	Vt	Vp	Vt fess. diag.	Vt,lim	Comb.	c.s.	Verifica
ini.	2	4560	-2655.53	-3306			5199	0	SLV 10	0	No
fin.	2	6832	-4830.2	-2852			5199	0	SLV 10	0	No
ini.	2	-6757	3102.29	-13810			7902	3094	SLV 15	0.22	No
fin.	2	-3366	-3415.91	-7578			6545	2587	SLV 15	0.34	No
ini.	2	1781	-4150.19	7985			5199	1521	SLV 2	0.19	No
fin.	2	-1040	1154.64	10254			5615	2171	SLV 2	0.21	No
ini.	2	4560	-2655.53	-3306			5199	0	SLV 9	0	No
fin.	2	6832	-4830.2	-2852			5199	0	SLV 9	0	No
ini.	2	1781	-4150.19	7985			5199	1521	SLV 1	0.19	No
fin.	2	-1040	1154.64	10254			5615	2171	SLV 1	0.21	No
ini.	2	5746	-4299.62	2757			5199	0	SLV 5	0	No
fin.	2	5980	-2961.31	2748			5199	0	SLV 5	0	No
ini.	2	-6757	3102.29	-13810			7902	3094	SLV 16	0.22	No
fin.	2	-3366	-3415.91	-7578			6545	2587	SLV 16	0.34	No
ini.	2	-2173	1330.11	-12227			6068	2382	SLV 13	0.19	No
fin.	2	1800	-5074.98	-8412			5199	1516	SLV 13	0.18	No
ini.	2	5746	-4299.62	2757			5199	0	SLV 6	0	No
fin.	2	5980	-2961.31	2748			5199	0	SLV 6	0	No
ini.	2	-2173	1330.11	-12227			6068	2382	SLV 14	0.19	No
fin.	2	1800	-5074.98	-8412			5199	1516	SLV 14	0.18	No

Tabella dei coefficienti di sicurezza minimi

Stato limite	Coeff.s.	Comb.	Verifica
PF_SLV	2.699	SLV 13	Si
V_SLV	0	SLV 5	No
PF_SLU	5.144	SLU 77	Si
V_SLU	0.411	SLU 77	No

Trave di accoppiamento 29

Verifiche condotte secondo D.M. 17-01-18 (N.T.C.)

Dati geometrici

X ini.	Y ini.	Z ini.inf.	Z ini.sup.	H ini.	X fin.	Y fin.	Z fin.inf.	Z fin.sup	H fin.	Luce	Spessore	R. Trazione
-2.913	5.876	0.73	1.32	0.59	-1.913	5.876	0.73	1.32	0.59	1	0.45	30000

Caratteristiche del materiale

(Circolare 7 21-01-19 C8.5.I) Muratura in mattoni pieni e malta di calce LC2_Corti

fb_	fhk	fvk0	fhmedio	τ0	fv0	μ	ϕ	fvk,lim	E	G	FC
120000			172500	9000	20000	0.577	0.767	6500	320000000	128000000	1.2

Verifiche a pressoflessione delle travi in muratura in combinazioni non sismiche

Sezione	γM	N	M	Mu	Comb.	c.s.	Verifica
ini.	3	2548	-37.97	794.74	SLU 80	20.93	Si
fin.	3	1894	-418.39	794.74	SLU 80	1.9	Si
ini.	3	2469	-58.69	794.74	SLU 76	13.54	Si
fin.	3	1880	-391.22	794.74	SLU 76	2.03	Si
ini.	3	2556	-63.62	794.74	SLU 84	12.49	Si
fin.	3	1940	-410.84	794.74	SLU 84	1.93	Si
ini.	3	2503	-82	794.74	SLU 81	9.69	Si
fin.	3	1949	-388.83	794.74	SLU 81	2.04	Si
ini.	3	2563	-36.56	794.74	SLU 79	21.74	Si
fin.	3	1908	-421.48	794.74	SLU 79	1.89	Si
ini.	3	2581	-39.04	794.74	SLU 77	20.36	Si
fin.	3	1929	-421.29	794.74	SLU 77	1.89	Si
ini.	3	2498	-60.23	794.74	SLU 75	13.19	Si
fin.	3	1910	-393.1	794.74	SLU 75	2.02	Si
ini.	3	2566	-40.45	794.74	SLU 78	19.65	Si
fin.	3	1915	-418.2	794.74	SLU 78	1.9	Si
ini.	3	2572	-62.21	794.74	SLU 83	12.77	Si
fin.	3	1954	-413.93	794.74	SLU 83	1.92	Si
ini.	3	2513	-58.83	794.74	SLU 74	13.51	Si
fin.	3	1923	-396.19	794.74	SLU 74	2.01	Si

Verifiche a taglio delle travi in muratura secondo §C8.7.1.3.1 in combinazioni non sismiche

Sezione	γM	N	M	V	Vt	Vp	Vt fess. diag.	Vt,lim	Comb.	c.s.	Verifica
ini.	3	2364	-36.65	1506			682	0	SLU 57	0	No
fin.	3	1786	-374.73	-2280			682	0	SLU 57	0	No
ini.	3	2295	-56.44	1551			682	0	SLU 54	0	No
fin.	3	1781	-349.63	-2198			682	0	SLU 54	0	No
ini.	3	2360	-32.77	1489			682	0	SLU 58	0	No
fin.	3	1779	-378	-2289			682	0	SLU 58	0	No
ini.	3	1626	-46.13	1083			682	0	SLU 1	0	No
fin.	3	1302	-232.11	-1481			682	0	SLU 1	0	No
ini.	3	2267	-54.9	1540			682	0	SLU 55	0	No
fin.	3	1751	-347.75	-2186			682	0	SLU 55	0	No
ini.	3	2345	-34.17	1492			682	0	SLU 59	0	No
fin.	3	1765	-374.91	-2277			682	0	SLU 59	0	No
ini.	3	2301	-78.21	1677			682	0	SLU 60	0	No
fin.	3	1820	-345.35	-2247			682	0	SLU 60	0	No
ini.	3	2310	-55.03	1547			682	0	SLU 53	0	No
fin.	3	1794	-352.72	-2210			682	0	SLU 53	0	No
ini.	3	2379	-35.25	1502			682	0	SLU 56	0	No
fin.	3	1800	-377.82	-2292			682	0	SLU 56	0	No
ini.	3	2285	-79.61	1681			682	0	SLU 61	0	No
fin.	3	1806	-342.26	-2235			682	0	SLU 61	0	No

Verifiche a pressoflessione delle travi in muratura in combinazioni sismiche

Sezione	γM	N	M	Mu	Comb.	c.s.	Verifica
ini.	2	1183	4146.72	1192.11	SLV 11	0.29	No
fin.	2	2361	-3967.48	1192.11	SLV 11	0.3	No
ini.	2	254	3433.01	1192.11	SLV 8	0.35	No
fin.	2	2761	-3250.99	1192.11	SLV 8	0.37	No
ini.	2	1183	4146.72	1192.11	SLV 12	0.29	No
fin.	2	2361	-3967.48	1192.11	SLV 12	0.3	No
ini.	2	2288	-4248.96	1192.11	SLV 6	0.28	No
fin.	2	386	3455.01	1192.11	SLV 6	0.35	No
ini.	2	2978	2290.7	1192.11	SLV 15	0.52	No
fin.	2	1063	-2456.28	1192.11	SLV 15	0.49	No
ini.	2	3216	-3535.24	1192.11	SLV 9	0.34	No
fin.	2	-14	2738.52	1192.11	SLV 9	0.44	No
ini.	2	254	3433.01	1192.11	SLV 7	0.35	No
fin.	2	2761	-3250.99	1192.11	SLV 7	0.37	No
ini.	2	3216	-3535.24	1192.11	SLV 10	0.34	No
fin.	2	-14	2738.52	1192.11	SLV 10	0.44	No
ini.	2	2978	2290.7	1192.11	SLV 16	0.52	No
fin.	2	1063	-2456.28	1192.11	SLV 16	0.49	No
ini.	2	2288	-4248.96	1192.11	SLV 5	0.28	No
fin.	2	386	3455.01	1192.11	SLV 5	0.35	No

Verifiche a taglio delle travi in muratura secondo §C8.7.1.3.1 in combinazioni sismiche

Sezione	γM	N	M	V	Vt	Vp	Vt fess. diag.	Vt,lim	Comb.	c.s.	Verifica
ini.	2	492	-2392.94	3660			1022	305	SLV 2	0.08	No
fin.	2	1683	1943.81	1719			1022	0	SLV 2	0	No
ini.	2	3216	-3535.24	-200			1022	0	SLV 10	0	No
fin.	2	-14	2738.52	-2323			1026	387	SLV 10	0.17	No
ini.	2	2288	-4248.96	1387			1022	0	SLV 5	0	No
fin.	2	386	3455.01	-361			1022	324	SLV 5	0.9	No
ini.	2	3216	-3535.24	-200			1022	0	SLV 9	0	No
fin.	2	-14	2738.52	-2323			1026	387	SLV 9	0.17	No
ini.	2	254	3433.01	2593			1022	346	SLV 8	0.13	No

Sezione	γM	N	M	V	Vt	Vp	Vt fess. diag.	Vt,lim	Comb.	c.s.	Verifica
fin.	2	2761	-3250.99	-955			1022	0	SLV 8	0	No
ini.	2	-118	-88.35	4022			1054	402	SLV 3	0.1	No
fin.	2	2396	-67.98	1541			1022	0	SLV 3	0	No
ini.	2	-118	-88.35	4022			1054	402	SLV 4	0.1	No
fin.	2	2396	-67.98	1541			1022	0	SLV 4	0	No
ini.	2	492	-2392.94	3660			1022	305	SLV 1	0.08	No
fin.	2	1683	1943.81	1719			1022	0	SLV 1	0	No
ini.	2	254	3433.01	2593			1022	346	SLV 7	0.13	No
fin.	2	2761	-3250.99	-955			1022	0	SLV 7	0	No
ini.	2	2288	-4248.96	1387			1022	0	SLV 6	0	No
fin.	2	386	3455.01	-361			1022	324	SLV 6	0.9	No

Tabella dei coefficienti di sicurezza minimi

Stato limite	Coeff.s.	Comb.	Verifica
PF_SLV	0.281	SLV 5	No
V_SLV	0	SLV 1	No
PF_SLU	1.886	SLU 79	Si
V_SLU	0	SLU 1	No

Trave di accoppiamento 30

Verifiche condotte secondo D.M. 17-01-18 (N.T.C.)

Dati geometrici

X ini.	Y ini.	Z ini.inf.	Z ini.sup.	H ini.	X fin.	Y fin.	Z fin.inf.	Z fin.sup	H fin.	Luce	Spessore	R. Trazione
-21.878	5.937	1.32	2.22	0.9	-22.878	5.937	1.32	2.22	0.9	1	0.28	30000

Caratteristiche del materiale

(Circolare 7 21-01-19 C8.5.I) Muratura in mattoni pieni e malta di calce LC2_Corti

fb_	fhk	fvk0	fhmedio	τ0	fv0	μ	ϕ	fvk,lim	E	G	FC
120000			172500	9000	20000	0.577	0.767	6500	320000000	128000000	1.2

Verifiche a pressoflessione delle travi in muratura in combinazioni non sismiche

Sezione	γM	N	M	Mu	Comb.	c.s.	Verifica
ini.	3	6161	1039.5	1150.68	SLU 82	1.11	Si
fin.	3	6633	568.84	1150.68	SLU 82	2.02	Si
ini.	3	6273	1061.69	1150.68	SLU 84	1.08	Si
fin.	3	6761	580.96	1150.68	SLU 84	1.98	Si
ini.	3	6195	1049.47	1150.68	SLU 78	1.1	Si
fin.	3	6675	582.87	1150.68	SLU 78	1.97	Si
ini.	3	6082	1027.27	1150.68	SLU 75	1.12	Si
fin.	3	6547	570.75	1150.68	SLU 75	2.02	Si
ini.	3	6207	1036.29	1150.68	SLU 79	1.11	Si
fin.	3	6681	595.23	1150.68	SLU 79	1.93	Si
ini.	3	6211	1035.1	1150.68	SLU 81	1.11	Si
fin.	3	6680	583.61	1150.68	SLU 81	1.97	Si
ini.	3	6245	1045.07	1150.68	SLU 77	1.1	Si
fin.	3	6723	597.64	1150.68	SLU 77	1.93	Si
ini.	3	6323	1057.3	1150.68	SLU 83	1.09	Si
fin.	3	6808	595.73	1150.68	SLU 83	1.93	Si
ini.	3	6157	1040.69	1150.68	SLU 80	1.11	Si
fin.	3	6634	580.46	1150.68	SLU 80	1.98	Si
ini.	3	6132	1022.87	1150.68	SLU 74	1.12	Si
fin.	3	6595	585.52	1150.68	SLU 74	1.97	Si

Verifiche a taglio delle travi in muratura secondo §C8.7.1.3.1 in combinazioni non sismiche

Sezione	γM	N	M	V	Vt	Vp	Vt fess. diag.	Vt,lim	Comb.	c.s.	Verifica
ini.	3	5714	943.32	-1599			873	0	SLU 56	0	No
fin.	3	6132	563.28	1598			873	0	SLU 56	0	No
ini.	3	5676	934.54	-1580			873	0	SLU 58	0	No
fin.	3	6090	560.87	1588			873	0	SLU 58	0	No
ini.	3	5480	919.68	-1562			873	0	SLU 55	0	No
fin.	3	5883	524.13	1475			873	0	SLU 55	0	No
ini.	3	5601	921.13	-1553			873	0	SLU 53	0	No
fin.	3	6004	551.16	1554			873	0	SLU 53	0	No
ini.	3	5629	937.75	-1593			873	0	SLU 61	0	No
fin.	3	6041	534.48	1499			873	0	SLU 61	0	No
ini.	3	5626	938.94	-1597			873	0	SLU 59	0	No
fin.	3	6042	546.1	1546			873	0	SLU 59	0	No
ini.	3	5551	925.52	-1570			873	0	SLU 54	0	No
fin.	3	5956	536.39	1512			873	0	SLU 54	0	No
ini.	3	5679	933.35	-1576			873	0	SLU 60	0	No
fin.	3	6089	549.24	1540			873	0	SLU 60	0	No
ini.	3	3922	634.02	-1039			873	0	SLU 1	0	No
fin.	3	4186	399.18	1112			873	0	SLU 1	0	No
ini.	3	5664	947.72	-1616			873	0	SLU 57	0	No
fin.	3	6084	548.51	1556			873	0	SLU 57	0	No

Verifiche a pressoflessione delle travi in muratura in combinazioni sismiche

Sezione	γM	N	M	Mu	Comb.	c.s.	Verifica
ini.	2	18344	5175.3	1726.01	SLV 7	0.33	No
fin.	2	23031	263.41	1726.01	SLV 7	6.55	Si
ini.	2	6918	3929.98	1726.01	SLV 4	0.44	No
fin.	2	12379	-1036.99	1726.01	SLV 4	1.66	Si
ini.	2	-9891	-3791.52	1726.01	SLV 9	0.46	No
fin.	2	-13981	571.42	1726.01	SLV 9	3.02	Si

Sezione	γM	N	M	Mu	Comb.	c.s.	Verifica
ini.	2	19361	3927.13	1726.01	SLV 11	0.44	No
fin.	2	21513	1191.89	1726.01	SLV 11	1.45	Si
ini.	2	1534	-2546.2	1726.01	SLV 14	0.68	No
fin.	2	-3329	1871.82	1726.01	SLV 14	0.92	No
ini.	2	1534	-2546.2	1726.01	SLV 13	0.68	No
fin.	2	-3329	1871.82	1726.01	SLV 13	0.92	No
ini.	2	6918	3929.98	1726.01	SLV 3	0.44	No
fin.	2	12379	-1036.99	1726.01	SLV 3	1.66	Si
ini.	2	19361	3927.13	1726.01	SLV 12	0.44	No
fin.	2	21513	1191.89	1726.01	SLV 12	1.45	Si
ini.	2	18344	5175.3	1726.01	SLV 8	0.33	No
fin.	2	23031	263.41	1726.01	SLV 8	6.55	Si
ini.	2	-9891	-3791.52	1726.01	SLV 10	0.46	No
fin.	2	-13981	571.42	1726.01	SLV 10	3.02	Si

Verifiche a taglio delle travi in muratura secondo §C8.7.1.3.1 in combinazioni sismiche

Sezione	γM	N	M	V	Vt	Vp	Vt fess. diag.	Vt,lim	Comb.	c.s.	Verifica
ini.	2	1534	-2546.2	6505			1310	0	SLV 13	0	No
fin.	2	-3329	1871.82	5719			2509	941	SLV 13	0.16	No
ini.	2	18344	5175.3	-7813			1310	0	SLV 8	0	No
fin.	2	23031	263.41	-1409			1310	0	SLV 8	0	No
ini.	2	19361	3927.13	-4077			1310	0	SLV 11	0	No
fin.	2	21513	1191.89	1080			1310	0	SLV 11	0	No
ini.	2	19361	3927.13	-4077			1310	0	SLV 12	0	No
fin.	2	21513	1191.89	1080			1310	0	SLV 12	0	No
ini.	2	-1857	1614.38	-5949			1979	776	SLV 2	0.13	No
fin.	2	1731	-1223.13	-2578			1310	0	SLV 2	0	No
ini.	2	6918	3929.98	-8821			1310	0	SLV 4	0	No
fin.	2	12379	-1036.99	-3378			1310	0	SLV 4	0	No
ini.	2	1534	-2546.2	6505			1310	0	SLV 14	0	No
fin.	2	-3329	1871.82	5719			2509	941	SLV 14	0.16	No
ini.	2	18344	5175.3	-7813			1310	0	SLV 7	0	No
fin.	2	23031	263.41	-1409			1310	0	SLV 7	0	No
ini.	2	-1857	1614.38	-5949			1979	776	SLV 1	0.13	No
fin.	2	1731	-1223.13	-2578			1310	0	SLV 1	0	No
ini.	2	6918	3929.98	-8821			1310	0	SLV 3	0	No
fin.	2	12379	-1036.99	-3378			1310	0	SLV 3	0	No

Tabella dei coefficienti di sicurezza minimi

Stato limite	Coeff.s.	Comb.	Verifica
PF_SLV	0.334	SLV 7	No
V_SLV	0	SLV 1	No
PF_SLU	1.084	SLU 84	Si
V_SLU	0	SLU 1	No

Trave di accoppiamento 31

Verifiche condotte secondo D.M. 17-01-18 (N.T.C.)

Dati geometrici

X ini.	Y ini.	Z ini.inf.	Z ini.sup.	H ini.	X fin.	Y fin.	Z fin.inf.	Z fin.sup	H fin.	Luce	Spessore	R. Trazione
-21.878	5.937	4.12	5	0.88	-22.878	5.937	4.12	5	0.88	1	0.28	30000

Caratteristiche del materiale

(Circolare 7 21-01-19 C8.5.I) Muratura in mattoni pieni e malta di calce LC2_Corti

fb_	fhk	fvk0	fhmedio	τ0	fv0	μ	ϕ	fvk,lim	E	G	FC
120000			172500	9000	20000	0.577	0.767	6500	320000000	128000000	1.2

Verifiche a pressoflessione delle travi in muratura in combinazioni non sismiche

Sezione	γM	N	M	Mu	Comb.	c.s.	Verifica
ini.	3	-2447	-189.53	1100.1	SLU 82	5.8	Si
fin.	3	-3324	-492.82	1100.1	SLU 82	2.23	Si
ini.	3	-2524	-197.83	1100.1	SLU 83	5.56	Si
fin.	3	-3411	-505.88	1100.1	SLU 83	2.17	Si
ini.	3	-2501	-196.73	1100.1	SLU 79	5.59	Si
fin.	3	-3363	-500.3	1100.1	SLU 79	2.2	Si
ini.	3	-2498	-191.52	1100.1	SLU 84	5.74	Si
fin.	3	-3403	-505.91	1100.1	SLU 84	2.17	Si
ini.	3	-2441	-189.3	1100.1	SLU 75	5.81	Si
fin.	3	-3299	-491.51	1100.1	SLU 75	2.24	Si
ini.	3	-2491	-191.29	1100.1	SLU 78	5.75	Si
fin.	3	-3378	-504.59	1100.1	SLU 78	2.18	Si
ini.	3	-2475	-190.42	1100.1	SLU 80	5.78	Si
fin.	3	-3355	-500.33	1100.1	SLU 80	2.2	Si
ini.	3	-2517	-197.6	1100.1	SLU 77	5.57	Si
fin.	3	-3386	-504.57	1100.1	SLU 77	2.18	Si
ini.	3	-2466	-195.61	1100.1	SLU 74	5.62	Si
fin.	3	-3307	-491.48	1100.1	SLU 74	2.24	Si
ini.	3	-2473	-195.84	1100.1	SLU 81	5.62	Si
fin.	3	-3332	-492.8	1100.1	SLU 81	2.23	Si

Verifiche a taglio delle travi in muratura secondo §C8.7.1.3.1 in combinazioni non sismiche

Sezione	γM	N	M	V	Vt	Vp	Vt fess. diag.	Vt,lim	Comb.	c.s.	Verifica
ini.	3	-2501	-196.73	2146			1715	632	SLU 79	0.29	No
fin.	3	-3363	-500.3	-5365			2019	709	SLU 79	0.13	No
ini.	3	-2475	-190.42	2123			1706	630	SLU 80	0.3	No

Sezione	γM	N	M	V	Vt	Vp	Vt fess. diag.	Vt,lim	Comb.	c.s.	Verifica
fin.	3	-3355	-500.33	-5362			2016	709	SLU 80	0.13	No
ini.	3	-2466	-195.61	2129			1703	629	SLU 74	0.3	No
fin.	3	-3307	-491.48	-5285			1999	705	SLU 74	0.13	No
ini.	3	-2524	-197.83	2207			1723	634	SLU 83	0.29	No
fin.	3	-3411	-505.88	-5498			2036	713	SLU 83	0.13	No
ini.	3	-2491	-191.29	2135			1712	631	SLU 78	0.3	No
fin.	3	-3378	-504.59	-5399			2024	711	SLU 78	0.13	No
ini.	3	-2517	-197.6	2158			1721	634	SLU 77	0.29	No
fin.	3	-3386	-504.57	-5402			2027	711	SLU 77	0.13	No
ini.	3	-2441	-189.3	2106			1694	626	SLU 75	0.3	No
fin.	3	-3299	-491.51	-5281			1996	704	SLU 75	0.13	No
ini.	3	-2447	-189.53	2155			1696	627	SLU 82	0.29	No
fin.	3	-3324	-492.82	-5378			2005	706	SLU 82	0.13	No
ini.	3	-2498	-191.52	2184			1714	632	SLU 84	0.29	No
fin.	3	-3403	-505.91	-5495			2033	713	SLU 84	0.13	No
ini.	3	-2473	-195.84	2178			1705	629	SLU 81	0.29	No
fin.	3	-3332	-492.8	-5381			2008	707	SLU 81	0.13	No

Verifiche a pressoflessione delle travi in muratura in combinazioni sismiche

Sezione	γM	N	M	Mu	Comb.	c.s.	Verifica
ini.	2	968	1736.98	1650.16	SLV 4	0.95	No
fin.	2	-7933	-1542.47	1650.16	SLV 4	1.07	Si
ini.	2	-2251	-1558.88	1650.16	SLV 10	1.06	Si
fin.	2	2038	475.48	1650.16	SLV 10	3.47	Si
ini.	2	-4592	-1460.59	1650.16	SLV 15	1.13	Si
fin.	2	1715	580.95	1650.16	SLV 15	2.84	Si
ini.	2	-4410	-2022.48	1650.16	SLV 13	0.82	No
fin.	2	3423	875.29	1650.16	SLV 13	1.89	Si
ini.	2	-1190	1273.38	1650.16	SLV 7	1.3	Si
fin.	2	-6549	-1142.67	1650.16	SLV 7	1.44	Si
ini.	2	-4592	-1460.59	1650.16	SLV 16	1.13	Si
fin.	2	1715	580.95	1650.16	SLV 16	2.84	Si
ini.	2	-1190	1273.38	1650.16	SLV 8	1.3	Si
fin.	2	-6549	-1142.67	1650.16	SLV 8	1.44	Si
ini.	2	-4410	-2022.48	1650.16	SLV 14	0.82	No
fin.	2	3423	875.29	1650.16	SLV 14	1.89	Si
ini.	2	-2251	-1558.88	1650.16	SLV 9	1.06	Si
fin.	2	2038	475.48	1650.16	SLV 9	3.47	Si
ini.	2	968	1736.98	1650.16	SLV 3	0.95	No
fin.	2	-7933	-1542.47	1650.16	SLV 3	1.07	Si

Verifiche a taglio delle travi in muratura secondo §C8.7.1.3.1 in combinazioni sismiche

Sezione	γM	N	M	V	Vt	Vp	Vt fess. diag.	Vt,lim	Comb.	c.s.	Verifica
ini.	2	-4410	-2022.48	6418			2805	1009	SLV 13	0.16	No
fin.	2	3423	875.29	4491			1253	0	SLV 13	0	No
ini.	2	-4592	-1460.59	7698			2869	1025	SLV 16	0.13	No
fin.	2	1715	580.95	2626			1253	0	SLV 16	0	No
ini.	2	1151	1175.09	-4774			1253	121	SLV 2	0.03	No
fin.	2	-6225	-1248.14	-9705			3444	1160	SLV 2	0.12	No
ini.	2	1151	1175.09	-4774			1253	121	SLV 1	0.03	No
fin.	2	-6225	-1248.14	-9705			3444	1160	SLV 1	0.12	No
ini.	2	-2251	-1558.88	1007			2045	793	SLV 10	0.79	No
fin.	2	2038	475.48	1699			1253	0	SLV 10	0	No
ini.	2	968	1736.98	-3494			1253	218	SLV 3	0.06	No
fin.	2	-7933	-1542.47	-11571			4045	1286	SLV 3	0.11	No
ini.	2	-4410	-2022.48	6418			2805	1009	SLV 14	0.16	No
fin.	2	3423	875.29	4491			1253	0	SLV 14	0	No
ini.	2	968	1736.98	-3494			1253	218	SLV 4	0.06	No
fin.	2	-7933	-1542.47	-11571			4045	1286	SLV 4	0.11	No
ini.	2	-2251	-1558.88	1007			2045	793	SLV 9	0.79	No
fin.	2	2038	475.48	1699			1253	0	SLV 9	0	No
ini.	2	-4592	-1460.59	7698			2869	1025	SLV 15	0.13	No
fin.	2	1715	580.95	2626			1253	0	SLV 15	0	No

Tabella dei coefficienti di sicurezza minimi

Stato limite	Coeff.s.	Comb.	Verifica
PF_SLV	0.816	SLV 13	No
V_SLV	0	SLV 9	No
PF_SLU	2.175	SLU 84	Si
V_SLU	0.13	SLU 84	No

Trave di accoppiamento 32

Verifiche condotte secondo D.M. 17-01-18 (N.T.C.)

Dati geometrici

X ini.	Y ini.	Z ini.inf.	Z ini.sup.	H ini.	X fin.	Y fin.	Z fin.inf.	Z fin.sup	H fin.	Luce	Spessore	R. Trazione
-21.517	-3.183	1.32	2.22	0.9	-22.517	-3.183	1.32	2.22	0.9	1	0.28	30000

Caratteristiche del materiale

(Circolare 7 21-01-19 C8.5.I) Muratura in mattoni pieni e malta di calce LC2_Corti

fb_	fhk	fvk0	fhmedio	τ0	fv0	μ	ϕ	fvk,lim	E	G	FC
120000			172500	9000	20000	0.577	0.767	6500	320000000	128000000	1.2

Verifiche a pressoflessione delle travi in muratura in combinazioni non sismiche

Sezione	γM	N	M	Mu	Comb.	c.s.	Verifica

Sezione	γM	N	M	Mu	Comb.	c.s.	Verifica
ini.	3	8266	705.04	1150.68	SLU 62	1.63	Si
fin.	3	8162	351.06	1150.68	SLU 62	3.28	Si
ini.	3	7003	732.33	1150.68	SLU 84	1.57	Si
fin.	3	7016	342.37	1150.68	SLU 84	3.36	Si
ini.	3	8771	743.99	1150.68	SLU 74	1.55	Si
fin.	3	8649	371.07	1150.68	SLU 74	3.1	Si
ini.	3	8223	709.81	1150.68	SLU 60	1.62	Si
fin.	3	8139	336.01	1150.68	SLU 60	3.42	Si
ini.	3	6960	737.1	1150.68	SLU 82	1.56	Si
fin.	3	6993	327.32	1150.68	SLU 82	3.52	Si
ini.	3	8814	739.22	1150.68	SLU 77	1.56	Si
fin.	3	8672	386.12	1150.68	SLU 77	2.98	Si
ini.	3	9010	777.47	1150.68	SLU 81	1.48	Si
fin.	3	8912	356.91	1150.68	SLU 81	3.22	Si
ini.	3	6721	703.62	1150.68	SLU 75	1.64	Si
fin.	3	6730	341.48	1150.68	SLU 75	3.37	Si
ini.	3	9053	772.7	1150.68	SLU 83	1.49	Si
fin.	3	8935	371.96	1150.68	SLU 83	3.09	Si
ini.	3	8736	732.43	1150.68	SLU 79	1.57	Si
fin.	3	8596	383.52	1150.68	SLU 79	3	Si

Verifiche a taglio delle travi in muratura secondo §C8.7.1.3.1 in combinazioni non sismiche

Sezione	γM	N	M	V	Vt	Vp	Vt fess. diag.	Vt,lim	Comb.	c.s.	Verifica
ini.	3	5933	635.96	-2202			873	0	SLU 54	0	No
fin.	3	5957	320.58	901			873	0	SLU 54	0	No
ini.	3	8026	671.56	-1659			873	0	SLU 56	0	No
fin.	3	7899	365.22	608			873	0	SLU 56	0	No
ini.	3	7983	676.33	-1677			873	0	SLU 53	0	No
fin.	3	7876	350.17	570			873	0	SLU 53	0	No
ini.	3	4489	602.26	-2532			873	0	SLU 55	0	No
fin.	3	4601	298.25	1115			873	0	SLU 55	0	No
ini.	3	5976	631.19	-2184			873	0	SLU 57	0	No
fin.	3	5980	335.63	940			873	0	SLU 57	0	No
ini.	3	7948	664.77	-1639			873	0	SLU 58	0	No
fin.	3	7823	362.62	601			873	0	SLU 58	0	No
ini.	3	5609	472.83	-1157			873	0	SLU 1	0	No
fin.	3	5535	255.03	405			873	0	SLU 1	0	No
ini.	3	6173	669.44	-2301			873	0	SLU 61	0	No
fin.	3	6220	306.42	862			873	0	SLU 61	0	No
ini.	3	5898	624.4	-2164			873	0	SLU 59	0	No
fin.	3	5903	333.03	932			873	0	SLU 59	0	No
ini.	3	8223	709.81	-1776			873	0	SLU 60	0	No
fin.	3	8139	336.01	530			873	0	SLU 60	0	No

Verifiche a pressoflessione delle travi in muratura in combinazioni sismiche

Sezione	γM	N	M	Mu	Comb.	c.s.	Verifica
ini.	2	8681	2396.68	1726.01	SLV 4	0.72	No
fin.	2	11064	-1026.09	1726.01	SLV 4	1.68	Si
ini.	2	8681	2396.68	1726.01	SLV 3	0.72	No
fin.	2	11064	-1026.09	1726.01	SLV 3	1.68	Si
ini.	2	21813	106.72	1726.01	SLV 11	16.17	Si
fin.	2	14390	1600.43	1726.01	SLV 11	1.08	Si
ini.	2	12561	-1279.62	1726.01	SLV 15	1.35	Si
fin.	2	6387	2075.84	1726.01	SLV 15	0.83	No
ini.	2	21813	106.72	1726.01	SLV 12	16.17	Si
fin.	2	14390	1600.43	1726.01	SLV 12	1.08	Si
ini.	2	-413	2311.28	1726.01	SLV 1	0.75	No
fin.	2	5607	-1549.18	1726.01	SLV 1	1.11	Si
ini.	2	3467	-1365.02	1726.01	SLV 14	1.26	Si
fin.	2	931	1552.75	1726.01	SLV 14	1.11	Si
ini.	2	12561	-1279.62	1726.01	SLV 16	1.35	Si
fin.	2	6387	2075.84	1726.01	SLV 16	0.83	No
ini.	2	3467	-1365.02	1726.01	SLV 13	1.26	Si
fin.	2	931	1552.75	1726.01	SLV 13	1.11	Si
ini.	2	-413	2311.28	1726.01	SLV 2	0.75	No
fin.	2	5607	-1549.18	1726.01	SLV 2	1.11	Si

Verifiche a taglio delle travi in muratura secondo §C8.7.1.3.1 in combinazioni sismiche

Sezione	γM	N	M	V	Vt	Vp	Vt fess. diag.	Vt,lim	Comb.	c.s.	Verifica
ini.	2	3467	-1365.02	3952			1310	0	SLV 14	0	No
fin.	2	931	1552.75	5718			1310	252	SLV 14	0.04	No
ini.	2	21813	106.72	2797			1310	0	SLV 12	0	No
fin.	2	14390	1600.43	966			1310	0	SLV 12	0	No
ini.	2	20649	1209.61	-755			1310	0	SLV 7	0	No
fin.	2	15793	669.85	-2039			1310	0	SLV 7	0	No
ini.	2	21813	106.72	2797			1310	0	SLV 11	0	No
fin.	2	14390	1600.43	966			1310	0	SLV 11	0	No
ini.	2	8681	2396.68	-6508			1310	0	SLV 3	0	No
fin.	2	11064	-1026.09	-4873			1310	0	SLV 3	0	No
ini.	2	20649	1209.61	-755			1310	0	SLV 8	0	No
fin.	2	15793	669.85	-2039			1310	0	SLV 8	0	No
ini.	2	-413	2311.28	-7887			1459	568	SLV 1	0.07	No
fin.	2	5607	-1549.18	-4297			1310	0	SLV 1	0	No
ini.	2	8681	2396.68	-6508			1310	0	SLV 4	0	No
fin.	2	11064	-1026.09	-4873			1310	0	SLV 4	0	No
ini.	2	3467	-1365.02	3952			1310	0	SLV 13	0	No
fin.	2	931	1552.75	5718			1310	252	SLV 13	0.04	No
ini.	2	-413	2311.28	-7887			1459	568	SLV 2	0.07	No
fin.	2	5607	-1549.18	-4297			1310	0	SLV 2	0	No

Tabella dei coefficienti di sicurezza minimi

Stato limite	Coeff.s.	Comb.	Verifica
PF_SLV	0.72	SLV 3	No
V_SLV	0	SLV 1	No
PF_SLU	1.48	SLU 81	Si
V_SLU	0	SLU 1	No

Trave di accoppiamento 33

Verifiche condotte secondo D.M. 17-01-18 (N.T.C.)

Dati geometrici

X ini.	Y ini.	Z ini.inf.	Z ini.sup.	H ini.	X fin.	Y fin.	Z fin.inf.	Z fin.sup	H fin.	Luce	Spessore	R. Trazione
-21.517	-3.183	4.12	5	0.88	-22.517	-3.183	4.12	5	0.88	1	0.28	30000

Caratteristiche del materiale

(Circolare 7 21-01-19 C8.5.I) Muratura in mattoni pieni e malta di calce LC2_Corti

fb_	fhk	fvk0	fhmedio	τ0	fv0	μ	ϕ	fvk,lim	E	G	FC
120000			172500	9000	20000	0.577	0.767	6500	320000000	128000000	1.2

Verifiche a pressoflessione delle travi in muratura in combinazioni non sismiche

Sezione	γM	N	M	Mu	Comb.	c.s.	Verifica
ini.	3	-1702	31.56	1100.1	SLU 81	34.85	Si
fin.	3	-3459	-668.2	1100.1	SLU 81	1.65	Si
ini.	3	-1726	-17.72	1100.1	SLU 75	62.1	Si
fin.	3	-3305	-661.07	1100.1	SLU 75	1.66	Si
ini.	3	-1703	-3.11	1100.1	SLU 82	353.66	Si
fin.	3	-3402	-690.81	1100.1	SLU 82	1.59	Si
ini.	3	-1764	23.23	1100.1	SLU 83	47.35	Si
fin.	3	-3468	-663.01	1100.1	SLU 83	1.66	Si
ini.	3	-1786	-26.46	1100.1	SLU 80	41.58	Si
fin.	3	-3285	-648.74	1100.1	SLU 80	1.7	Si
ini.	3	-1725	-41.25	1100.1	SLU 76	26.67	Si
fin.	3	-3238	-669	1100.1	SLU 76	1.64	Si
ini.	3	-1766	-11.44	1100.1	SLU 84	96.16	Si
fin.	3	-3411	-685.63	1100.1	SLU 84	1.6	Si
ini.	3	-1788	-26.05	1100.1	SLU 78	42.24	Si
fin.	3	-3313	-655.88	1100.1	SLU 78	1.68	Si
ini.	3	-1725	16.96	1100.1	SLU 74	64.87	Si
fin.	3	-3362	-638.45	1100.1	SLU 74	1.72	Si
ini.	3	-1662	-32.92	1100.1	SLU 73	33.42	Si
fin.	3	-3230	-674.19	1100.1	SLU 73	1.63	Si

Verifiche a taglio delle travi in muratura secondo §C8.7.1.3.1 in combinazioni non sismiche

Sezione	γM	N	M	V	Vt	Vp	Vt fess. diag.	Vt,lim	Comb.	c.s.	Verifica
ini.	3	-1788	-26.05	2738			1465	560	SLU 78	0.2	No
fin.	3	-3313	-655.88	-3972			2001	705	SLU 78	0.18	No
ini.	3	-1725	-41.25	2828			1442	553	SLU 76	0.2	No
fin.	3	-3238	-669	-4009			1975	699	SLU 76	0.17	No
ini.	3	-1726	-17.72	2680			1443	553	SLU 75	0.21	No
fin.	3	-3305	-661.07	-3992			1998	704	SLU 75	0.18	No
ini.	3	-1786	-26.46	2719			1464	560	SLU 80	0.21	No
fin.	3	-3285	-648.74	-3930			1991	703	SLU 80	0.18	No
ini.	3	-1766	-11.44	2782			1457	558	SLU 84	0.2	No
fin.	3	-3411	-685.63	-4156			2036	713	SLU 84	0.17	No
ini.	3	-1725	16.96	2431			1442	553	SLU 74	0.23	No
fin.	3	-3362	-638.45	-3904			2018	709	SLU 74	0.18	No
ini.	3	-1662	-32.92	2770			1420	546	SLU 73	0.2	No
fin.	3	-3230	-674.19	-4029			1972	698	SLU 73	0.17	No
ini.	3	-1702	31.56	2474			1434	551	SLU 81	0.22	No
fin.	3	-3459	-668.2	-4088			2053	717	SLU 81	0.18	No
ini.	3	-1703	-3.11	2724			1435	551	SLU 82	0.2	No
fin.	3	-3402	-690.81	-4177			2033	713	SLU 82	0.17	No
ini.	3	-1764	23.23	2532			1456	558	SLU 83	0.22	No
fin.	3	-3468	-663.01	-4068			2056	718	SLU 83	0.18	No

Verifiche a pressoflessione delle travi in muratura in combinazioni sismiche

Sezione	γM	N	M	Mu	Comb.	c.s.	Verifica
ini.	2	3303	1135.43	1650.16	SLV 3	1.45	Si
fin.	2	-6307	-1963.82	1650.16	SLV 3	0.84	No
ini.	2	-1913	7.53	1650.16	SLV 5	219.23	Si
fin.	2	-5850	-1345.38	1650.16	SLV 5	1.23	Si
ini.	2	-4578	-928.3	1650.16	SLV 15	1.78	Si
fin.	2	2895	1329.57	1650.16	SLV 15	1.24	Si
ini.	2	2169	948.23	1650.16	SLV 1	1.74	Si
fin.	2	-7583	-2210.39	1650.16	SLV 1	0.75	No
ini.	2	-1913	7.53	1650.16	SLV 6	219.23	Si
fin.	2	-5850	-1345.38	1650.16	SLV 6	1.23	Si
ini.	2	-5712	-1115.5	1650.16	SLV 13	1.48	Si
fin.	2	1619	1082.99	1650.16	SLV 13	1.52	Si
ini.	2	2169	948.23	1650.16	SLV 2	1.74	Si
fin.	2	-7583	-2210.39	1650.16	SLV 2	0.75	No
ini.	2	3303	1135.43	1650.16	SLV 4	1.45	Si
fin.	2	-6307	-1963.82	1650.16	SLV 4	0.84	No
ini.	2	-5712	-1115.5	1650.16	SLV 14	1.48	Si
fin.	2	1619	1082.99	1650.16	SLV 14	1.52	Si
ini.	2	-4578	-928.3	1650.16	SLV 16	1.78	Si

Sezione	γM	N	M	Mu	Comb.	c.s.	Verifica
fin.	2	2895	1329.57	1650.16	SLV 16	1.24	Si

Verifiche a taglio delle travi in muratura secondo §C8.7.1.3.1 in combinazioni sismiche

Sezione	γM	N	M	V	Vt	Vp	Vt fess. diag.	Vt,lim	Comb.	c.s.	Verifica
ini.	2	3303	1135.43	-5262			1253	0	SLV 3	0	No
fin.	2	-6307	-1963.82	-8892			3472	1166	SLV 3	0.13	No
ini.	2	-5712	-1115.5	8488			3263	1119	SLV 13	0.13	No
fin.	2	1619	1082.99	3563			1253	0	SLV 13	0	No
ini.	2	1868	631.53	-2025			1253	0	SLV 7	0	No
fin.	2	-1597	-523.46	-3114			1815	714	SLV 7	0.23	No
ini.	2	2169	948.23	-4223			1253	0	SLV 2	0	No
fin.	2	-7583	-2210.39	-9828			3922	1261	SLV 2	0.13	No
ini.	2	2169	948.23	-4223			1253	0	SLV 1	0	No
fin.	2	-7583	-2210.39	-9828			3922	1261	SLV 1	0.13	No
ini.	2	-4578	-928.3	7449			2864	1024	SLV 15	0.14	No
fin.	2	2895	1329.57	4498			1253	0	SLV 15	0	No
ini.	2	1868	631.53	-2025			1253	0	SLV 8	0	No
fin.	2	-1597	-523.46	-3114			1815	714	SLV 8	0.23	No
ini.	2	3303	1135.43	-5262			1253	0	SLV 4	0	No
fin.	2	-6307	-1963.82	-8892			3472	1166	SLV 4	0.13	No
ini.	2	-5712	-1115.5	8488			3263	1119	SLV 14	0.13	No
fin.	2	1619	1082.99	3563			1253	0	SLV 14	0	No
ini.	2	-4578	-928.3	7449			2864	1024	SLV 16	0.14	No
fin.	2	2895	1329.57	4498			1253	0	SLV 16	0	No

Tabella dei coefficienti di sicurezza minimi

Stato limite	Coeff.s.	Comb.	Verifica
PF_SLV	0.747	SLV 1	No
V_SLV	0	SLV 1	No
PF_SLU	1.592	SLU 82	Si
V_SLU	0.171	SLU 82	No

Trave di accoppiamento 34

Verifiche condotte secondo D.M. 17-01-18 (N.T.C.)

Dati geometrici

X ini.	Y ini.	Z ini.inf.	Z ini.sup.	H ini.	X fin.	Y fin.	Z fin.inf.	Z fin.sup	H fin.	Luce	Spessore	R. Trazione
-18.787	-3.183	1.32	3.32	2	-19.287	-3.183	1.32	3.32	2	0.5	0.28	30000

Caratteristiche del materiale

(Circolare 7 21-01-19 C8.5.I) Muratura in mattoni pieni e malta di calce LC2_Corti

fb_	fhk	fvk0	fhmedio	τ0	fv0	μ	ϕ	fvk,lim	E	G	FC
120000			172500	9000	20000	0.577	0.767	6500	320000000	128000000	1.2

Verifiche a pressoflessione delle travi in muratura in combinazioni non sismiche

Sezione	γM	N	M	Mu	Comb.	c.s.	Verifica
ini.	3	-1801	-577.41	5682.35	SLU 78	9.84	Si
fin.	3	-593	5636.97	5682.35	SLU 78	1.01	Si
ini.	3	-2284	-1164.99	5682.35	SLU 77	4.88	Si
fin.	3	-371	5934.66	5682.35	SLU 77	0.96	No
ini.	3	-1817	-593.41	5682.35	SLU 84	9.58	Si
fin.	3	-551	5795.13	5682.35	SLU 84	0.98	No
ini.	3	-2251	-1157.4	5682.35	SLU 74	4.91	Si
fin.	3	-341	5897.49	5682.35	SLU 74	0.96	No
ini.	3	-1784	-585.82	5682.35	SLU 82	9.7	Si
fin.	3	-520	5757.97	5682.35	SLU 82	0.99	No
ini.	3	-2266	-1153.94	5682.35	SLU 79	4.92	Si
fin.	3	-370	5882.4	5682.35	SLU 79	0.97	No
ini.	3	-2267	-1173.4	5682.35	SLU 81	4.84	Si
fin.	3	-299	6055.66	5682.35	SLU 81	0.94	No
ini.	3	-1768	-569.81	5682.35	SLU 75	9.97	Si
fin.	3	-562	5599.8	5682.35	SLU 75	1.01	Si
ini.	3	-2300	-1181	5682.35	SLU 83	4.81	Si
fin.	3	-329	6092.83	5682.35	SLU 83	0.93	No
ini.	3	-1784	-566.35	5682.35	SLU 80	10.03	Si
fin.	3	-591	5584.7	5682.35	SLU 80	1.02	Si

Verifiche a taglio delle travi in muratura secondo §C8.7.1.3.1 in combinazioni non sismiche

Sezione	γM	N	M	V	Vt	Vp	Vt fess. diag.	Vt,lim	Comb.	c.s.	Verifica
ini.	3	-2284	-1164.99	9316			3070	1210	SLU 77	0.13	No
fin.	3	-371	5934.66	14207			2305	889	SLU 77	0.06	No
ini.	3	-1801	-577.41	8796			2877	1138	SLU 78	0.13	No
fin.	3	-593	5636.97	13921			2394	932	SLU 78	0.07	No
ini.	3	-2251	-1157.4	9240			3057	1205	SLU 74	0.13	No
fin.	3	-341	5897.49	14098			2293	883	SLU 74	0.06	No
ini.	3	-2144	-1102.63	8692			3014	1190	SLU 62	0.14	No
fin.	3	-329	5551.76	13271			2288	880	SLU 62	0.07	No
ini.	3	-2266	-1153.94	9230			3063	1208	SLU 79	0.13	No
fin.	3	-370	5882.4	14077			2305	888	SLU 79	0.06	No
ini.	3	-2300	-1181	9517			3076	1212	SLU 83	0.13	No
fin.	3	-329	6092.83	14541			2288	880	SLU 83	0.06	No
ini.	3	-2267	-1173.4	9441			3063	1208	SLU 81	0.13	No
fin.	3	-299	6055.66	14432			2276	874	SLU 81	0.06	No
ini.	3	-1817	-593.41	8997			2883	1140	SLU 84	0.13	No
fin.	3	-551	5795.13	14255			2377	924	SLU 84	0.06	No

Sezione	γM	N	M	V	Vt	Vp	Vt fess. diag.	Vt,lim	Comb.	c.s.	Verifica
ini.	3	-1784	-585.82	8921			2870	1135	SLU 82	0.13	No
fin.	3	-520	5757.97	14146			2365	918	SLU 82	0.06	No
ini.	3	-2111	-1095.04	8616			3001	1185	SLU 60	0.14	No
fin.	3	-299	5514.59	13162			2276	874	SLU 60	0.07	No

Verifiche a pressoflessione delle travi in muratura in combinazioni sismiche

Sezione	γM	N	M	Mu	Comb.	c.s.	Verifica
ini.	2	-776	1928.06	8523.53	SLV 5	4.42	Si
fin.	2	1673	6567.63	8523.53	SLV 5	1.3	Si
ini.	2	-875	1778.34	8523.53	SLV 9	4.79	Si
fin.	2	-265	7685.27	8523.53	SLV 9	1.11	Si
ini.	2	-776	1928.06	8523.53	SLV 6	4.42	Si
fin.	2	1673	6567.63	8523.53	SLV 6	1.3	Si
ini.	2	-875	1778.34	8523.53	SLV 10	4.79	Si
fin.	2	-265	7685.27	8523.53	SLV 10	1.11	Si
ini.	2	-1976	-1871.02	8523.53	SLV 16	4.56	Si
fin.	2	-3763	5015.12	8523.53	SLV 16	1.7	Si
ini.	2	-2392	-3567.33	8523.53	SLV 12	2.39	Si
fin.	2	-2169	1571.32	8523.53	SLV 12	5.42	Si
ini.	2	-1976	-1871.02	8523.53	SLV 15	4.56	Si
fin.	2	-3763	5015.12	8523.53	SLV 15	1.7	Si
ini.	2	-1520	-267.32	8523.53	SLV 14	31.89	Si
fin.	2	-3191	6849.3	8523.53	SLV 14	1.24	Si
ini.	2	-1520	-267.32	8523.53	SLV 13	31.89	Si
fin.	2	-3191	6849.3	8523.53	SLV 13	1.24	Si
ini.	2	-2392	-3567.33	8523.53	SLV 11	2.39	Si
fin.	2	-2169	1571.32	8523.53	SLV 11	5.42	Si

Verifiche a taglio delle travi in muratura secondo §C8.7.1.3.1 in combinazioni sismiche

Sezione	γM	N	M	V	Vt	Vp	Vt fess. diag.	Vt,lim	Comb.	c.s.	Verifica
ini.	2	-776	1928.06	2544			3545	1376	SLV 5	0.54	No
fin.	2	1673	6567.63	9153			3235	773	SLV 5	0.08	No
ini.	2	-1520	-267.32	16296			3843	1512	SLV 14	0.09	No
fin.	2	-3191	6849.3	20085			4511	1781	SLV 14	0.09	No
ini.	2	-776	1928.06	2544			3545	1376	SLV 6	0.54	No
fin.	2	1673	6567.63	9153			3235	773	SLV 6	0.08	No
ini.	2	-1193	231.75	-3994			3712	1454	SLV 1	0.36	No
fin.	2	3266	3123.83	773			3235	0	SLV 1	0	No
ini.	2	-875	1778.34	8631			3585	1395	SLV 10	0.16	No
fin.	2	-265	7685.27	14947			3341	1274	SLV 10	0.09	No
ini.	2	-1193	231.75	-3994			3712	1454	SLV 2	0.36	No
fin.	2	3266	3123.83	773			3235	0	SLV 2	0	No
ini.	2	-875	1778.34	8631			3585	1395	SLV 9	0.16	No
fin.	2	-265	7685.27	14947			3341	1274	SLV 9	0.09	No
ini.	2	-1976	-1871.02	16779			4025	1590	SLV 16	0.09	No
fin.	2	-3763	5015.12	18695			4740	1864	SLV 16	0.1	No
ini.	2	-1976	-1871.02	16779			4025	1590	SLV 15	0.09	No
fin.	2	-3763	5015.12	18695			4740	1864	SLV 15	0.1	No
ini.	2	-1520	-267.32	16296			3843	1512	SLV 13	0.09	No
fin.	2	-3191	6849.3	20085			4511	1781	SLV 13	0.09	No

Tabella dei coefficienti di sicurezza minimi

Stato limite	Coeff.s.	Comb.	Verifica
PF_SLV	1.109	SLV 9	Si
V_SLV	0	SLV 1	No
PF_SLU	0.933	SLU 83	No
V_SLU	0.061	SLU 83	No

Trave di accoppiamento 35

Verifiche condotte secondo D.M. 17-01-18 (N.T.C.)

Dati geometrici

X ini.	Y ini.	Z ini.inf.	Z ini.sup.	H ini.	X fin.	Y fin.	Z fin.inf.	Z fin.sup	H fin.	Luce	Spessore	R. Trazione
-18.787	-3.183	4.12	5	0.88	-19.287	-3.183	4.12	5	0.88	0.5	0.28	30000

Caratteristiche del materiale

(Circolare 7 21-01-19 C8.5.I) Muratura in mattoni pieni e malta di calce LC2_Corti

fb_	fhk	fvk0	fhmedio	τ0	fv0	μ	ϕ	fvk,lim	E	G	FC
120000			172500	9000	20000	0.577	0.767	6500	320000000	128000000	1.2

Verifiche a pressoflessione delle travi in muratura in combinazioni non sismiche

Sezione	γM	N	M	Mu	Comb.	c.s.	Verifica
ini.	3	1757	-372.86	1100.1	SLU 74	2.95	Si
fin.	3	3298	709.51	1100.1	SLU 74	1.55	Si
ini.	3	1607	-351.27	1100.1	SLU 60	3.13	Si
fin.	3	3057	658.87	1100.1	SLU 60	1.67	Si
ini.	3	1602	-354.44	1100.1	SLU 62	3.1	Si
fin.	3	3061	662.24	1100.1	SLU 62	1.66	Si
ini.	3	1752	-376.03	1100.1	SLU 77	2.93	Si
fin.	3	3302	712.88	1100.1	SLU 77	1.54	Si
ini.	3	1795	-342.2	1100.1	SLU 84	3.21	Si
fin.	3	3130	669.11	1100.1	SLU 84	1.64	Si
ini.	3	1773	-385.97	1100.1	SLU 81	2.85	Si
fin.	3	3366	722.72	1100.1	SLU 81	1.52	Si
ini.	3	1715	-374.23	1100.1	SLU 79	2.94	Si

Sezione	γM	N	M	Mu	Comb.	c.s.	Verifica
fin.	3	3251	703.98	1100.1	SLU 79	1.56	Si
ini.	3	1768	-389.15	1100.1	SLU 83	2.83	Si
fin.	3	3370	726.08	1100.1	SLU 83	1.52	Si
ini.	3	1780	-329.08	1100.1	SLU 78	3.34	Si
fin.	3	3063	655.91	1100.1	SLU 78	1.68	Si
ini.	3	1800	-339.03	1100.1	SLU 82	3.24	Si
fin.	3	3126	665.75	1100.1	SLU 82	1.65	Si

Verifiche a taglio delle travi in muratura secondo §C8.7.1.3.1 in combinazioni non sismiche

Sezione	γM	N	M	V	Vt	Vp	Vt fess. diag.	Vt,lim	Comb.	c.s.	Verifica
ini.	3	1549	-339.52	6671			949	0	SLU 58	0	No
fin.	3	2943	640.14	53			949	0	SLU 58	0	No
ini.	3	1634	-304.32	6469			949	0	SLU 61	0	No
fin.	3	2817	601.9	-446			949	0	SLU 61	0	No
ini.	3	1607	-351.27	6928			949	0	SLU 60	0	No
fin.	3	3057	658.87	28			949	0	SLU 60	0	No
ini.	3	1614	-294.38	6286			949	0	SLU 57	0	No
fin.	3	2754	592.06	-426			949	0	SLU 57	0	No
ini.	3	1591	-338.15	6703			949	0	SLU 53	0	No
fin.	3	2989	645.66	46			949	0	SLU 53	0	No
ini.	3	1586	-341.33	6745			949	0	SLU 56	0	No
fin.	3	2993	649.03	48			949	0	SLU 56	0	No
ini.	3	1618	-291.21	6244			949	0	SLU 54	0	No
fin.	3	2750	588.69	-428			949	0	SLU 54	0	No
ini.	3	1599	-258.11	5865			949	0	SLU 55	0	No
fin.	3	2539	541.82	-739			949	0	SLU 55	0	No
ini.	3	1576	-292.58	6212			949	0	SLU 59	0	No
fin.	3	2703	583.17	-421			949	0	SLU 59	0	No
ini.	3	1155	-232.97	4644			949	0	SLU 1	0	No
fin.	3	2119	458.36	65			949	0	SLU 1	0	No

Verifiche a pressoflessione delle travi in muratura in combinazioni sismiche

Sezione	γM	N	M	Mu	Comb.	c.s.	Verifica
ini.	2	4437	-221.71	1650.16	SLV 15	7.44	Si
fin.	2	7245	1426.59	1650.16	SLV 15	1.16	Si
ini.	2	-2076	-613.94	1650.16	SLV 8	2.69	Si
fin.	2	-301	-197.08	1650.16	SLV 8	8.37	Si
ini.	2	4546	104.04	1650.16	SLV 10	15.86	Si
fin.	2	4879	1184.24	1650.16	SLV 10	1.39	Si
ini.	2	-3261	-480.31	1650.16	SLV 3	3.44	Si
fin.	2	-3275	-665.54	1650.16	SLV 3	2.48	Si
ini.	2	5731	-29.59	1650.16	SLV 13	55.77	Si
fin.	2	7853	1652.7	1650.16	SLV 13	1	No
ini.	2	-2076	-613.94	1650.16	SLV 7	2.69	Si
fin.	2	-301	-197.08	1650.16	SLV 7	8.37	Si
ini.	2	5731	-29.59	1650.16	SLV 14	55.77	Si
fin.	2	7853	1652.7	1650.16	SLV 14	1	No
ini.	2	4546	104.04	1650.16	SLV 9	15.86	Si
fin.	2	4879	1184.24	1650.16	SLV 9	1.39	Si
ini.	2	4437	-221.71	1650.16	SLV 16	7.44	Si
fin.	2	7245	1426.59	1650.16	SLV 16	1.16	Si
ini.	2	-3261	-480.31	1650.16	SLV 4	3.44	Si
fin.	2	-3275	-665.54	1650.16	SLV 4	2.48	Si

Verifiche a taglio delle travi in muratura secondo §C8.7.1.3.1 in combinazioni sismiche

Sezione	γM	N	M	V	Vt	Vp	Vt fess. diag.	Vt,lim	Comb.	c.s.	Verifica
ini.	2	4546	104.04	5022			1423	0	SLV 10	0	No
fin.	2	4879	1184.24	-1101			1423	0	SLV 10	0	No
ini.	2	2237	26.46	3225			1423	0	SLV 6	0	No
fin.	2	1723	556.6	-3138			1423	0	SLV 6	0	No
ini.	2	4437	-221.71	8358			1423	0	SLV 16	0	No
fin.	2	7245	1426.59	4083			1423	0	SLV 16	0	No
ini.	2	5731	-29.59	7786			1423	0	SLV 13	0	No
fin.	2	7853	1652.7	2787			1423	0	SLV 13	0	No
ini.	2	5731	-29.59	7786			1423	0	SLV 14	0	No
fin.	2	7853	1652.7	2787			1423	0	SLV 14	0	No
ini.	2	4437	-221.71	8358			1423	0	SLV 15	0	No
fin.	2	7245	1426.59	4083			1423	0	SLV 15	0	No
ini.	2	233	-536.36	6927			1423	482	SLV 11	0.07	No
fin.	2	2855	430.56	3219			1423	0	SLV 11	0	No
ini.	2	2237	26.46	3225			1423	0	SLV 5	0	No
fin.	2	1723	556.6	-3138			1423	0	SLV 5	0	No
ini.	2	4546	104.04	5022			1423	0	SLV 9	0	No
fin.	2	4879	1184.24	-1101			1423	0	SLV 9	0	No
ini.	2	233	-536.36	6927			1423	482	SLV 12	0.07	No
fin.	2	2855	430.56	3219			1423	0	SLV 12	0	No

Tabella dei coefficienti di sicurezza minimi

Stato limite	Coeff.s.	Comb.	Verifica
PF_SLV	0.998	SLV 13	No
V_SLV	0	SLV 5	No
PF_SLU	1.515	SLU 83	Si
V_SLU	0	SLU 1	No

Trave di accoppiamento 36

Verifiche condotte secondo D.M. 17-01-18 (N.T.C.)

Dati geometrici

X ini.	Y ini.	Z ini.inf.	Z ini.sup.	H ini.	X fin.	Y fin.	Z fin.inf.	Z fin.sup	H fin.	Luce	Spessore	R. Trazione
-17.277	-3.183	1.32	2.22	0.9	-18.277	-3.183	1.32	2.22	0.9	1	0.28	30000

Caratteristiche del materiale

(Circolare 7 21-01-19 C8.5.I) Muratura in mattoni pieni e malta di calce LC2_Corti

fb_	fhk	fvk0	fhmedio	τ0	fv0	μ	ϕ	fvk,lim	E	G	FC
120000			172500	9000	20000	0.577	0.767	6500	320000000	128000000	1.2

Verifiche a pressoflessione delle travi in muratura in combinazioni non sismiche

Sezione	γM	N	M	Mu	Comb.	c.s.	Verifica
ini.	3	-2460	-913.62	1150.68	SLU 84	1.26	Si
fin.	3	-3828	-1861.26	1150.68	SLU 84	0.62	No
ini.	3	-2864	-854.12	1150.68	SLU 79	1.35	Si
fin.	3	-4506	-2015.86	1150.68	SLU 79	0.57	No
ini.	3	-2725	-788.37	1150.68	SLU 62	1.46	Si
fin.	3	-4259	-1916.18	1150.68	SLU 62	0.6	No
ini.	3	-2899	-875.62	1150.68	SLU 81	1.31	Si
fin.	3	-4570	-2084.53	1150.68	SLU 81	0.55	No
ini.	3	-2881	-867.91	1150.68	SLU 77	1.33	Si
fin.	3	-4546	-2030	1150.68	SLU 77	0.57	No
ini.	3	-2428	-908.59	1150.68	SLU 82	1.27	Si
fin.	3	-3782	-1850.74	1150.68	SLU 82	0.62	No
ini.	3	-2849	-862.89	1150.68	SLU 74	1.33	Si
fin.	3	-4501	-2019.48	1150.68	SLU 74	0.57	No
ini.	3	-2693	-783.34	1150.68	SLU 60	1.47	Si
fin.	3	-4214	-1905.66	1150.68	SLU 60	0.6	No
ini.	3	-2674	-775.63	1150.68	SLU 56	1.48	Si
fin.	3	-4190	-1851.13	1150.68	SLU 56	0.62	No
ini.	3	-2931	-880.64	1150.68	SLU 83	1.31	Si
fin.	3	-4615	-2095.05	1150.68	SLU 83	0.55	No

Verifiche a taglio delle travi in muratura secondo §C8.7.1.3.1 in combinazioni non sismiche

Sezione	γM	N	M	V	Vt	Vp	Vt fess. diag.	Vt,lim	Comb.	c.s.	Verifica
ini.	3	-1808	-806.76	-2166			1524	584	SLU 52	0.27	No
fin.	3	-2747	-1426.3	2991			1862	679	SLU 52	0.23	No
ini.	3	-2046	-904.06	-2418			1610	609	SLU 76	0.25	No
fin.	3	-3149	-1615.68	3312			2007	716	SLU 76	0.22	No
ini.	3	-1783	-825.43	-2083			1515	581	SLU 65	0.28	No
fin.	3	-2743	-1395.84	3023			1861	679	SLU 65	0.22	No
ini.	3	-2428	-908.59	-2619			1747	648	SLU 82	0.25	No
fin.	3	-3782	-1850.74	3317			2235	771	SLU 82	0.23	No
ini.	3	-1523	-766.86	-1984			1422	551	SLU 31	0.28	No
fin.	3	-2343	-1281.58	2782			1717	640	SLU 31	0.23	No
ini.	3	-2014	-899.03	-2399			1599	606	SLU 73	0.25	No
fin.	3	-3103	-1605.17	3286			1991	712	SLU 73	0.22	No
ini.	3	-1555	-771.89	-2003			1433	555	SLU 34	0.28	No
fin.	3	-2389	-1292.1	2807			1733	644	SLU 34	0.23	No
ini.	3	-1839	-811.78	-2185			1536	587	SLU 55	0.27	No
fin.	3	-2792	-1436.81	3016			1879	684	SLU 55	0.23	No
ini.	3	-1815	-830.45	-2102			1527	584	SLU 68	0.28	No
fin.	3	-2789	-1406.36	3049			1877	683	SLU 68	0.22	No
ini.	3	-2460	-913.62	-2638			1759	651	SLU 84	0.25	No
fin.	3	-3828	-1861.26	3343			2251	775	SLU 84	0.23	No

Verifiche a pressoflessione delle travi in muratura in combinazioni sismiche

Sezione	γM	N	M	Mu	Comb.	c.s.	Verifica
ini.	2	-4697	2548.02	1726.01	SLV 4	0.68	No
fin.	2	-2571	-3143.66	1726.01	SLV 4	0.55	No
ini.	2	-248	-2984.93	1726.01	SLV 10	0.58	No
fin.	2	39	580.17	1726.01	SLV 10	2.98	Si
ini.	2	703	-3734.85	1726.01	SLV 14	0.46	No
fin.	2	-3718	355.75	1726.01	SLV 14	4.85	Si
ini.	2	-248	-2984.93	1726.01	SLV 9	0.58	No
fin.	2	39	580.17	1726.01	SLV 9	2.98	Si
ini.	2	-3747	1798.09	1726.01	SLV 8	0.96	No
fin.	2	-6328	-3368.07	1726.01	SLV 8	0.51	No
ini.	2	83	-2779.42	1726.01	SLV 15	0.62	No
fin.	2	-5930	-599.77	1726.01	SLV 15	2.88	Si
ini.	2	-4697	2548.02	1726.01	SLV 3	0.68	No
fin.	2	-2571	-3143.66	1726.01	SLV 3	0.55	No
ini.	2	-3747	1798.09	1726.01	SLV 7	0.96	No
fin.	2	-6328	-3368.07	1726.01	SLV 7	0.51	No
ini.	2	703	-3734.85	1726.01	SLV 13	0.46	No
fin.	2	-3718	355.75	1726.01	SLV 13	4.85	Si
ini.	2	83	-2779.42	1726.01	SLV 16	0.62	No
fin.	2	-5930	-599.77	1726.01	SLV 16	2.88	Si

Verifiche a taglio delle travi in muratura secondo §C8.7.1.3.1 in combinazioni sismiche

Sezione	γM	N	M	V	Vt	Vp	Vt fess. diag.	Vt,lim	Comb.	c.s.	Verifica
ini.	2	703	-3734.85	4535			1310	328	SLV 13	0.07	No
fin.	2	-3718	355.75	8728			2648	980	SLV 13	0.11	No
ini.	2	-1682	-1386.7	-3066			1916	753	SLV 6	0.25	No
fin.	2	1047	-183	2325			1310	203	SLV 6	0.09	No
ini.	2	83	-2779.42	4182			1310	476	SLV 16	0.11	No
fin.	2	-5930	-599.77	7566			3445	1178	SLV 16	0.16	No
ini.	2	-248	-2984.93	633			1399	539	SLV 9	0.85	No
fin.	2	39	580.17	5906			1310	485	SLV 9	0.08	No
ini.	2	-4078	1592.58	-7792			2778	1015	SLV 1	0.13	No

Sezione	γM	N	M	V	Vt	Vp	Vt fess. diag.	Vt,lim	Comb.	c.s.	Verifica
fin.	2	-359	-2188.13	-3208			1439	559	SLV 1	0.17	No
ini.	2	-1682	-1386.7	-3066			1916	753	SLV 5	0.25	No
fin.	2	1047	-183	2325			1310	203	SLV 5	0.09	No
ini.	2	-4078	1592.58	-7792			2778	1015	SLV 2	0.13	No
fin.	2	-359	-2188.13	-3208			1439	559	SLV 2	0.17	No
ini.	2	-248	-2984.93	633			1399	539	SLV 10	0.85	No
fin.	2	39	580.17	5906			1310	485	SLV 10	0.08	No
ini.	2	703	-3734.85	4535			1310	328	SLV 14	0.07	No
fin.	2	-3718	355.75	8728			2648	980	SLV 14	0.11	No
ini.	2	83	-2779.42	4182			1310	476	SLV 15	0.11	No
fin.	2	-5930	-599.77	7566			3445	1178	SLV 15	0.16	No

Tabella dei coefficienti di sicurezza minimi

Stato limite	Coeff.s.	Comb.	Verifica
PF_SLV	0.462	SLV 13	No
V_SLV	0.072	SLV 13	No
PF_SLU	0.549	SLU 83	No
V_SLU	0.216	SLU 76	No

Trave di accoppiamento 37

Verifiche condotte secondo D.M. 17-01-18 (N.T.C.)

Dati geometrici

X ini.	Y ini.	Z ini.inf.	Z ini.sup.	H ini.	X fin.	Y fin.	Z fin.inf.	Z fin.sup	H fin.	Luce	Spessore	R. Trazione
-17.277	-3.183	4.12	5	0.88	-18.277	-3.183	4.12	5	0.88	1	0.28	30000

Caratteristiche del materiale

(Circolare 7 21-01-19 C8.5.I) Muratura in mattoni pieni e malta di calce LC2_Corti

fb_	fhk	fvk0	fhmedio	τ0	fv0	μ	ϕ	fvk,lim	E	G	FC
120000			172500	9000	20000	0.577	0.767	6500	320000000	128000000	1.2

Verifiche a pressoflessione delle travi in muratura in combinazioni non sismiche

Sezione	γM	N	M	Mu	Comb.	c.s.	Verifica
ini.	3	1783	243.01	1100.1	SLU 83	4.53	Si
fin.	3	2621	-70.73	1100.1	SLU 83	15.55	Si
ini.	3	1720	240.9	1100.1	SLU 84	4.57	Si
fin.	3	2555	-57.89	1100.1	SLU 84	19	Si
ini.	3	1704	222.82	1100.1	SLU 74	4.94	Si
fin.	3	2576	-54.79	1100.1	SLU 74	20.08	Si
ini.	3	1642	220.71	1100.1	SLU 75	4.98	Si
fin.	3	2511	-41.95	1100.1	SLU 75	26.23	Si
ini.	3	1589	221.01	1100.1	SLU 73	4.98	Si
fin.	3	2424	-35.73	1100.1	SLU 73	30.79	Si
ini.	3	1700	221.46	1100.1	SLU 77	4.97	Si
fin.	3	2576	-55.54	1100.1	SLU 77	19.81	Si
ini.	3	1684	221.8	1100.1	SLU 79	4.96	Si
fin.	3	2532	-58.65	1100.1	SLU 79	18.76	Si
ini.	3	1546	220.1	1100.1	SLU 39	5	Si
fin.	3	2208	-69.04	1100.1	SLU 39	15.93	Si
ini.	3	1787	244.37	1100.1	SLU 81	4.5	Si
fin.	3	2621	-69.98	1100.1	SLU 81	15.72	Si
ini.	3	1725	242.26	1100.1	SLU 82	4.54	Si
fin.	3	2556	-57.13	1100.1	SLU 82	19.26	Si

Verifiche a taglio delle travi in muratura secondo §C8.7.1.3.1 in combinazioni non sismiche

Sezione	γM	N	M	V	Vt	Vp	Vt fess. diag.	Vt,lim	Comb.	c.s.	Verifica
ini.	3	1588	210.27	2330			835	0	SLU 60	0	No
fin.	3	2370	-59.19	-2475			835	0	SLU 60	0	No
ini.	3	1438	185.25	2300			835	0	SLU 57	0	No
fin.	3	2259	-31.91	-2290			835	0	SLU 57	0	No
ini.	3	1505	188.72	2302			835	0	SLU 53	0	No
fin.	3	2325	-44	-2334			835	0	SLU 53	0	No
ini.	3	1385	185.55	2236			835	0	SLU 55	0	No
fin.	3	2173	-25.7	-2232			835	0	SLU 55	0	No
ini.	3	1500	187.36	2320			835	0	SLU 56	0	No
fin.	3	2324	-44.76	-2349			835	0	SLU 56	0	No
ini.	3	1442	186.61	2282			835	0	SLU 54	0	No
fin.	3	2259	-31.16	-2276			835	0	SLU 54	0	No
ini.	3	1032	119.86	1642			835	0	SLU 1	0	No
fin.	3	1664	-15.47	-1565			835	0	SLU 1	0	No
ini.	3	1484	187.7	2288			835	0	SLU 58	0	No
fin.	3	2281	-47.86	-2343			835	0	SLU 58	0	No
ini.	3	1422	185.59	2268			835	0	SLU 59	0	No
fin.	3	2216	-35.02	-2285			835	0	SLU 59	0	No
ini.	3	1525	208.16	2311			835	0	SLU 61	0	No
fin.	3	2304	-46.34	-2417			835	0	SLU 61	0	No

Verifiche a pressoflessione delle travi in muratura in combinazioni sismiche

Sezione	γM	N	M	Mu	Comb.	c.s.	Verifica
ini.	2	3456	997.73	1650.16	SLV 8	1.65	Si
fin.	2	-418	-831.7	1650.16	SLV 8	1.98	Si
ini.	2	-535	-662.01	1650.16	SLV 14	2.49	Si
fin.	2	6403	1396.85	1650.16	SLV 14	1.18	Si
ini.	2	1654	543.21	1650.16	SLV 2	3.04	Si
fin.	2	-2268	-1202.23	1650.16	SLV 2	1.37	Si

Sezione	γM	N	M	Mu	Comb.	c.s.	Verifica
ini.	2	3456	997.73	1650.16	SLV 7	1.65	Si
fin.	2	-418	-831.7	1650.16	SLV 7	1.98	Si
ini.	2	2839	947.68	1650.16	SLV 4	1.74	Si
fin.	2	-2815	-1451.06	1650.16	SLV 4	1.14	Si
ini.	2	2839	947.68	1650.16	SLV 3	1.74	Si
fin.	2	-2815	-1451.06	1650.16	SLV 3	1.14	Si
ini.	2	-535	-662.01	1650.16	SLV 13	2.49	Si
fin.	2	6403	1396.85	1650.16	SLV 13	1.18	Si
ini.	2	650	-257.55	1650.16	SLV 15	6.41	Si
fin.	2	5856	1148.01	1650.16	SLV 15	1.44	Si
ini.	2	650	-257.55	1650.16	SLV 16	6.41	Si
fin.	2	5856	1148.01	1650.16	SLV 16	1.44	Si
ini.	2	1654	543.21	1650.16	SLV 1	3.04	Si
fin.	2	-2268	-1202.23	1650.16	SLV 1	1.37	Si

Verifiche a taglio delle travi in muratura secondo §C8.7.1.3.1 in combinazioni sismiche

Sezione	γM	N	M	V	Vt	Vp	Vt fess. diag.	Vt,lim	Comb.	c.s.	Verifica
ini.	2	3456	997.73	-1884			1253	0	SLV 7	0	No
fin.	2	-418	-831.7	-5285			1400	546	SLV 7	0.1	No
ini.	2	3456	997.73	-1884			1253	0	SLV 8	0	No
fin.	2	-418	-831.7	-5285			1400	546	SLV 8	0.1	No
ini.	2	2839	947.68	-2509			1253	0	SLV 3	0	No
fin.	2	-2815	-1451.06	-7181			2243	854	SLV 3	0.12	No
ini.	2	1654	543.21	-953			1253	0	SLV 2	0	No
fin.	2	-2268	-1202.23	-5925			2051	794	SLV 2	0.13	No
ini.	2	1654	543.21	-953			1253	0	SLV 1	0	No
fin.	2	-2268	-1202.23	-5925			2051	794	SLV 1	0.13	No
ini.	2	-1152	-712.06	5393			1658	656	SLV 9	0.12	No
fin.	2	4007	777.48	1782			1253	0	SLV 9	0	No
ini.	2	-1152	-712.06	5393			1658	656	SLV 10	0.12	No
fin.	2	4007	777.48	1782			1253	0	SLV 10	0	No
ini.	2	-496	-350.49	3302			1427	558	SLV 5	0.17	No
fin.	2	1406	-2.24	-1099			1253	0	SLV 5	0	No
ini.	2	2839	947.68	-2509			1253	0	SLV 4	0	No
fin.	2	-2815	-1451.06	-7181			2243	854	SLV 4	0.12	No
ini.	2	-496	-350.49	3302			1427	558	SLV 6	0.17	No
fin.	2	1406	-2.24	-1099			1253	0	SLV 6	0	No

Tabella dei coefficienti di sicurezza minimi

Stato limite	Coeff.s.	Comb.	Verifica
PF_SLV	1.137	SLV 3	Si
V_SLV	0	SLV 1	No
PF_SLU	4.502	SLU 81	Si
V_SLU	0	SLU 1	No

Trave di accoppiamento 38

Verifiche condotte secondo D.M. 17-01-18 (N.T.C.)

Dati geometrici

X ini.	Y ini.	Z ini.inf.	Z ini.sup.	H ini.	X fin.	Y fin.	Z fin.inf.	Z fin.sup	H fin.	Luce	Spessore	R. Trazione
-16.968	-4.413	4.43	5	0.57	-16.968	-3.323	4.43	5	0.57	1.09	0.28	30000

Caratteristiche del materiale

(Circolare 7 21-01-19 C8.5.I) Muratura in mattoni pieni e malta di calce LC2_Corti

fb_	fhk	fvk0	fhmedio	τ0	fv0	μ	ϕ	fvk,lim	E	G	FC
120000			172500	9000	20000	0.577	0.767	6500	320000000	128000000	1.2

Verifiche a pressoflessione delle travi in muratura in combinazioni non sismiche

Sezione	γM	N	M	Mu	Comb.	c.s.	Verifica
ini.	3	-458	177.11	461.55	SLU 13	2.61	Si
fin.	3	-74	-2.65	461.55	SLU 13	174.34	Si
ini.	3	-440	169.52	461.55	SLU 10	2.72	Si
fin.	3	-71	-2.99	461.55	SLU 10	154.5	Si
ini.	3	-475	183.66	461.55	SLU 47	2.51	Si
fin.	3	-91	1.98	461.55	SLU 47	232.89	Si
ini.	3	-474	184.77	461.55	SLU 2	2.5	Si
fin.	3	-70	-0.59	461.55	SLU 2	776.49	Si
ini.	3	-492	192.36	461.55	SLU 5	2.4	Si
fin.	3	-74	-0.25	461.55	SLU 5	1814.18	Si
ini.	3	-467	180.9	461.55	SLU 26	2.55	Si
fin.	3	-75	-2.37	461.55	SLU 26	195.1	Si
ini.	3	-441	168.41	461.55	SLU 55	2.74	Si
fin.	3	-92	-0.41	461.55	SLU 55	1122.56	Si
ini.	3	-457	176.07	461.55	SLU 44	2.62	Si
fin.	3	-88	1.64	461.55	SLU 44	281.12	Si
ini.	3	-450	172.21	461.55	SLU 68	2.68	Si
fin.	3	-93	-0.13	461.55	SLU 68	3564.97	Si
ini.	3	-449	173.32	461.55	SLU 23	2.66	Si
fin.	3	-72	-2.71	461.55	SLU 23	170.58	Si

Verifiche a taglio delle travi in muratura secondo §C8.7.1.3.1 in combinazioni non sismiche

Sezione	γM	N	M	V	Vt	Vp	Vt fess. diag.	Vt,lim	Comb.	c.s.	Verifica
ini.	3	-450	172.21	-307			530	210	SLU 68	0.68	No
fin.	3	-93	-0.13	-461			435	167	SLU 68	0.36	No
ini.	3	-423	160.82	-286			522	207	SLU 52	0.72	No

Sezione	γM	N	M	V	Vt	Vp	Vt fess. diag.	Vt,lim	Comb.	c.s.	Verifica
fin.	3	-88	-0.75	-446			433	166	SLU 52	0.37	No
ini.	3	-457	176.07	-255			532	210	SLU 44	0.83	No
fin.	3	-88	1.64	-467			433	166	SLU 44	0.36	No
ini.	3	-475	183.66	-275			537	212	SLU 47	0.77	No
fin.	3	-91	1.98	-477			434	167	SLU 47	0.35	No
ini.	3	-441	168.41	-307			527	209	SLU 55	0.68	No
fin.	3	-92	-0.41	-456			434	167	SLU 55	0.37	No
ini.	3	-474	184.77	-209			536	212	SLU 2	1.01	Si
fin.	3	-70	-0.59	-447			428	164	SLU 2	0.37	No
ini.	3	-492	192.36	-230			541	214	SLU 5	0.93	No
fin.	3	-74	-0.25	-457			429	165	SLU 5	0.36	No
ini.	3	-432	164.62	-287			525	208	SLU 65	0.72	No
fin.	3	-89	-0.47	-452			434	167	SLU 65	0.37	No
ini.	3	-458	177.11	-261			532	210	SLU 13	0.8	No
fin.	3	-74	-2.65	-436			430	165	SLU 13	0.38	No
ini.	3	-467	180.9	-262			534	211	SLU 26	0.81	No
fin.	3	-75	-2.37	-441			430	165	SLU 26	0.37	No

Verifiche a pressoflessione delle travi in muratura in combinazioni sismiche

Sezione	γM	N	M	Mu	Comb.	c.s.	Verifica
ini.	2	3836	-1642.47	692.32	SLV 6	0.42	No
fin.	2	-167	101.05	692.32	SLV 6	6.85	Si
ini.	2	-3631	1543.06	692.32	SLV 12	0.45	No
fin.	2	46	-93.54	692.32	SLV 12	7.4	Si
ini.	2	-4427	1771.54	692.32	SLV 7	0.39	No
fin.	2	36	-120.56	692.32	SLV 7	5.74	Si
ini.	2	3836	-1642.47	692.32	SLV 5	0.42	No
fin.	2	-167	101.05	692.32	SLV 5	6.85	Si
ini.	2	-3631	1543.06	692.32	SLV 11	0.45	No
fin.	2	46	-93.54	692.32	SLV 11	7.4	Si
ini.	2	4632	-1870.96	692.32	SLV 10	0.37	No
fin.	2	-157	128.07	692.32	SLV 10	5.41	Si
ini.	2	2669	-942.62	692.32	SLV 13	0.73	No
fin.	2	-75	82.03	692.32	SLV 13	8.44	Si
ini.	2	4632	-1870.96	692.32	SLV 9	0.37	No
fin.	2	-157	128.07	692.32	SLV 9	5.41	Si
ini.	2	-4427	1771.54	692.32	SLV 8	0.39	No
fin.	2	36	-120.56	692.32	SLV 8	5.74	Si
ini.	2	2669	-942.62	692.32	SLV 14	0.73	No
fin.	2	-75	82.03	692.32	SLV 14	8.44	Si

Verifiche a taglio delle travi in muratura secondo §C8.7.1.3.1 in combinazioni sismiche

Sezione	γM	N	M	V	Vt	Vp	Vt fess. diag.	Vt,lim	Comb.	c.s.	Verifica
ini.	2	3836	-1642.47	-163			615	0	SLV 5	0	No
fin.	2	-167	101.05	2782			659	254	SLV 5	0.09	No
ini.	2	2669	-942.62	1549			615	0	SLV 14	0	No
fin.	2	-75	82.03	1893			635	242	SLV 14	0.13	No
ini.	2	3836	-1642.47	-163			615	0	SLV 6	0	No
fin.	2	-167	101.05	2782			659	254	SLV 6	0.09	No
ini.	2	-4427	1771.54	-1207			1795	592	SLV 7	0.49	No
fin.	2	36	-120.56	-3454			615	226	SLV 7	0.07	No
ini.	2	-4427	1771.54	-1207			1795	592	SLV 8	0.49	No
fin.	2	36	-120.56	-3454			615	226	SLV 8	0.07	No
ini.	2	4632	-1870.96	796			615	0	SLV 9	0	No
fin.	2	-157	128.07	3379			657	253	SLV 9	0.07	No
ini.	2	2669	-942.62	1549			615	0	SLV 13	0	No
fin.	2	-75	82.03	1893			635	242	SLV 13	0.13	No
ini.	2	4632	-1870.96	796			615	0	SLV 10	0	No
fin.	2	-157	128.07	3379			657	253	SLV 10	0.07	No
ini.	2	-3631	1543.06	-248			1583	545	SLV 11	2.19	Si
fin.	2	46	-93.54	-2857			615	225	SLV 11	0.08	No
ini.	2	-3631	1543.06	-248			1583	545	SLV 12	2.19	Si
fin.	2	46	-93.54	-2857			615	225	SLV 12	0.08	No

Tabella dei coefficienti di sicurezza minimi

Stato limite	Coeff.s.	Comb.	Verifica
PF_SLV	0.37	SLV 9	No
V_SLV	0	SLV 5	No
PF_SLU	2.399	SLU 5	Si
V_SLU	0.35	SLU 47	No

Trave di accoppiamento 39

Verifiche condotte secondo D.M. 17-01-18 (N.T.C.)

Dati geometrici

X ini.	Y ini.	Z ini.inf.	Z ini.sup.	H ini.	X fin.	Y fin.	Z fin.inf.	Z fin.sup	H fin.	Luce	Spessore	R. Trazione
-15.287	-3.183	3.42	5	1.58	-16.187	-3.183	3.42	5	1.58	0.9	0.28	30000

Caratteristiche del materiale

(Circolare 7 21-01-19 C8.5.I) Muratura in mattoni pieni e malta di calce LC2_Corti

fb_	fhk	fvk0	fhmedio	τ0	fv0	μ	ϕ	fvk,lim	E	G	FC
120000			172500	9000	20000	0.577	0.767	6500	320000000	128000000	1.2

Verifiche a pressoflessione delle travi in muratura in combinazioni non sismiche

Sezione	γM	N	M	Mu	Comb.	c.s.	Verifica

Sezione	γM	N	M	Mu	Comb.	c.s.	Verifica
ini.	3	-956	-1889.71	3546.36	SLU 82	1.88	Si
fin.	3	-956	446.24	3546.36	SLU 82	7.95	Si
ini.	3	-996	-1894.1	3546.36	SLU 81	1.87	Si
fin.	3	-996	269.6	3546.36	SLU 81	13.15	Si
ini.	3	-1024	-1887.84	3546.36	SLU 83	1.88	Si
fin.	3	-1024	263.46	3546.36	SLU 83	13.46	Si
ini.	3	-969	-1824.96	3546.36	SLU 75	1.94	Si
fin.	3	-969	403.9	3546.36	SLU 75	8.78	Si
ini.	3	-1037	-1823.09	3546.36	SLU 77	1.95	Si
fin.	3	-1037	221.12	3546.36	SLU 77	16.04	Si
ini.	3	-985	-1883.45	3546.36	SLU 84	1.88	Si
fin.	3	-985	440.1	3546.36	SLU 84	8.06	Si
ini.	3	-1008	-1829.35	3546.36	SLU 74	1.94	Si
fin.	3	-1008	227.26	3546.36	SLU 74	15.61	Si
ini.	3	-997	-1818.7	3546.36	SLU 78	1.95	Si
fin.	3	-997	397.76	3546.36	SLU 78	8.92	Si
ini.	3	-919	-1793.32	3546.36	SLU 73	1.98	Si
fin.	3	-919	521.78	3546.36	SLU 73	6.8	Si
ini.	3	-1042	-1788.11	3546.36	SLU 79	1.98	Si
fin.	3	-1042	215.1	3546.36	SLU 79	16.49	Si

Verifiche a taglio delle travi in muratura secondo §C8.7.1.3.1 in combinazioni non sismiche

Sezione	γM	N	M	V	Vt	Vp	Vt fess. diag.	Vt,lim	Comb.	c.s.	Verifica
ini.	3	-996	-1894.1	3363			2102	830	SLU 81	0.25	No
fin.	3	-996	269.6	1503			2102	830	SLU 81	0.55	No
ini.	3	-947	-1787.05	3458			2083	822	SLU 76	0.24	No
fin.	3	-947	515.64	1716			2083	822	SLU 76	0.48	No
ini.	3	-956	-1889.71	3554			2086	823	SLU 82	0.23	No
fin.	3	-956	446.24	1694			2086	823	SLU 82	0.49	No
ini.	3	-997	-1818.7	3362			2103	830	SLU 78	0.25	No
fin.	3	-997	397.76	1621			2103	830	SLU 78	0.51	No
ini.	3	-734	-1645.77	3189			1998	785	SLU 40	0.25	No
fin.	3	-734	468.89	1554			1998	785	SLU 40	0.51	No
ini.	3	-969	-1824.96	3376			2091	825	SLU 75	0.24	No
fin.	3	-969	403.9	1634			2091	825	SLU 75	0.5	No
ini.	3	-985	-1883.45	3540			2098	828	SLU 84	0.23	No
fin.	3	-985	440.1	1680			2098	828	SLU 84	0.49	No
ini.	3	-1024	-1887.84	3349			2113	835	SLU 83	0.25	No
fin.	3	-1024	263.46	1489			2113	835	SLU 83	0.56	No
ini.	3	-763	-1639.51	3175			2009	790	SLU 42	0.25	No
fin.	3	-763	462.75	1540			2009	790	SLU 42	0.51	No
ini.	3	-919	-1793.32	3472			2071	817	SLU 73	0.24	No
fin.	3	-919	521.78	1730			2071	817	SLU 73	0.47	No

Verifiche a pressoflessione delle travi in muratura in combinazioni sismiche

Sezione	γM	N	M	Mu	Comb.	c.s.	Verifica
ini.	2	1451	-6801.79	5319.53	SLV 16	0.78	No
fin.	2	1646	4320.03	5319.53	SLV 16	1.23	Si
ini.	2	-1627	5790.84	5319.53	SLV 4	0.92	No
fin.	2	-1805	-4489.53	5319.53	SLV 4	1.18	Si
ini.	2	-2942	4350.28	5319.53	SLV 1	1.22	Si
fin.	2	-3137	-4112.06	5319.53	SLV 1	1.29	Si
ini.	2	1451	-6801.79	5319.53	SLV 15	0.78	No
fin.	2	1646	4320.03	5319.53	SLV 15	1.23	Si
ini.	2	-2942	4350.28	5319.53	SLV 2	1.22	Si
fin.	2	-3137	-4112.06	5319.53	SLV 2	1.29	Si
ini.	2	-2476	-5515.58	5319.53	SLV 10	0.96	No
fin.	2	-2448	2054.53	5319.53	SLV 10	2.59	Si
ini.	2	-1627	5790.84	5319.53	SLV 3	0.92	No
fin.	2	-1805	-4489.53	5319.53	SLV 3	1.18	Si
ini.	2	136	-8242.35	5319.53	SLV 14	0.65	No
fin.	2	314	4697.49	5319.53	SLV 14	1.13	Si
ini.	2	-2476	-5515.58	5319.53	SLV 9	0.96	No
fin.	2	-2448	2054.53	5319.53	SLV 9	2.59	Si
ini.	2	136	-8242.35	5319.53	SLV 13	0.65	No
fin.	2	314	4697.49	5319.53	SLV 13	1.13	Si

Verifiche a taglio delle travi in muratura secondo §C8.7.1.3.1 in combinazioni sismiche

Sezione	γM	N	M	V	Vt	Vp	Vt fess. diag.	Vt,lim	Comb.	c.s.	Verifica
ini.	2	1909	-713.72	3909			2556	356	SLV 11	0.09	No
fin.	2	1993	796.31	1873			2556	303	SLV 11	0.16	No
ini.	2	1909	-713.72	3909			2556	356	SLV 12	0.09	No
fin.	2	1993	796.31	1873			2556	303	SLV 12	0.16	No
ini.	2	136	-8242.35	14504			2556	932	SLV 13	0.06	No
fin.	2	314	4697.49	13711			2556	891	SLV 13	0.06	No
ini.	2	1451	-6801.79	13460			2556	564	SLV 15	0.04	No
fin.	2	1646	4320.03	12122			2556	486	SLV 15	0.04	No
ini.	2	-1627	5790.84	-10349			3206	1267	SLV 3	0.12	No
fin.	2	-1805	-4489.53	-11867			3278	1296	SLV 3	0.11	No
ini.	2	136	-8242.35	14504			2556	932	SLV 14	0.06	No
fin.	2	314	4697.49	13711			2556	891	SLV 14	0.06	No
ini.	2	985	3064.07	-3234			2556	716	SLV 8	0.22	No
fin.	2	958	-1846.56	-5324			2556	724	SLV 8	0.14	No
ini.	2	-1627	5790.84	-10349			3206	1267	SLV 4	0.12	No
fin.	2	-1805	-4489.53	-11867			3278	1296	SLV 4	0.11	No
ini.	2	985	3064.07	-3234			2556	716	SLV 7	0.22	No
fin.	2	958	-1846.56	-5324			2556	724	SLV 7	0.14	No
ini.	2	1451	-6801.79	13460			2556	564	SLV 16	0.04	No
fin.	2	1646	4320.03	12122			2556	486	SLV 16	0.04	No

Tabella dei coefficienti di sicurezza minimi

Stato limite	Coeff.s.	Comb.	Verifica
PF_SLV	0.645	SLV 13	No
V_SLV	0.04	SLV 15	No
PF_SLU	1.872	SLU 81	Si
V_SLU	0.232	SLU 82	No

Trave di accoppiamento 40

Verifiche condotte secondo D.M. 17-01-18 (N.T.C.)

Dati geometrici

X ini.	Y ini.	Z ini.inf.	Z ini.sup.	H ini.	X fin.	Y fin.	Z fin.inf.	Z fin.sup	H fin.	Luce	Spessore	R. Trazione
-16.697	-4.696	4.43	5	0.57	-14.857	-4.696	4.43	5	0.57	1.84	0.3	30000

Caratteristiche del materiale

(Circolare 7 21-01-19 C8.5.I) Muratura in mattoni pieni e malta di calce LC2_Corti

fb_	fhk	fvk0	fhmedio	τ0	fv0	μ	ϕ	fvk,lim	E	G	FC
120000			172500	9000	20000	0.577	0.767	6500	320000000	128000000	1.2

Verifiche a pressoflessione delle travi in muratura in combinazioni non sismiche

Sezione	γM	N	M	Mu	Comb.	c.s.	Verifica
ini.	3	108	-12.28	494.52	SLU 47	40.27	Si
fin.	3	110	52.61	494.52	SLU 47	9.4	Si
ini.	3	113	-14.68	494.52	SLU 44	33.68	Si
fin.	3	79	62.18	494.52	SLU 44	7.95	Si
ini.	3	-86	55.05	494.52	SLU 74	8.98	Si
fin.	3	317	1.5	494.52	SLU 74	330.01	Si
ini.	3	-76	51.6	494.52	SLU 56	9.58	Si
fin.	3	283	11.08	494.52	SLU 56	44.62	Si
ini.	3	-85	54.33	494.52	SLU 81	9.1	Si
fin.	3	316	2.46	494.52	SLU 81	200.73	Si
ini.	3	-82	53.47	494.52	SLU 69	9.25	Si
fin.	3	299	4	494.52	SLU 69	123.62	Si
ini.	3	-90	57.42	494.52	SLU 79	8.61	Si
fin.	3	356	-11.5	494.52	SLU 79	43.02	Si
ini.	3	-82	53.44	494.52	SLU 71	9.25	Si
fin.	3	307	0.57	494.52	SLU 71	865.11	Si
ini.	3	-89	56.73	494.52	SLU 83	8.72	Si
fin.	3	347	-7.1	494.52	SLU 83	69.63	Si
ini.	3	-91	57.45	494.52	SLU 77	8.61	Si
fin.	3	348	-8.07	494.52	SLU 77	61.3	Si

Verifiche a taglio delle travi in muratura secondo §C8.7.1.3.1 in combinazioni non sismiche

Sezione	γM	N	M	V	Vt	Vp	Vt fess. diag.	Vt,lim	Comb.	c.s.	Verifica
ini.	3	13	22.24	-1450			439	163	SLU 84	0.11	No
fin.	3	286	6.89	499			439	117	SLU 84	0.23	No
ini.	3	90	-4.85	-1423			439	152	SLU 73	0.11	No
fin.	3	194	30.96	522			439	134	SLU 73	0.26	No
ini.	3	104	-10.7	-1341			439	149	SLU 52	0.11	No
fin.	3	129	50.11	537			439	145	SLU 52	0.27	No
ini.	3	100	-8.3	-1384			439	150	SLU 55	0.11	No
fin.	3	159	40.54	540			439	140	SLU 55	0.26	No
ini.	3	13	22.94	-1459			439	163	SLU 80	0.11	No
fin.	3	296	2.5	505			439	115	SLU 80	0.23	No
ini.	3	86	-2.45	-1466			439	152	SLU 76	0.1	No
fin.	3	225	21.39	525			439	129	SLU 76	0.24	No
ini.	3	99	-8.83	-1344			439	150	SLU 65	0.11	No
fin.	3	145	43.03	528			439	143	SLU 65	0.27	No
ini.	3	108	-12.28	-1304			439	149	SLU 47	0.11	No
fin.	3	110	52.61	546			439	148	SLU 47	0.27	No
ini.	3	94	-6.43	-1387			439	151	SLU 68	0.11	No
fin.	3	175	33.46	531			439	137	SLU 68	0.26	No
ini.	3	12	22.96	-1457			439	163	SLU 78	0.11	No
fin.	3	287	5.93	511			439	116	SLU 78	0.23	No

Verifiche a pressoflessione delle travi in muratura in combinazioni sismiche

Sezione	γM	N	M	Mu	Comb.	c.s.	Verifica
ini.	2	-698	375.76	741.78	SLV 5	1.97	Si
fin.	2	-1226	709.7	741.78	SLV 5	1.05	Si
ini.	2	-1384	510.01	741.78	SLV 13	1.45	Si
fin.	2	2470	-873.82	741.78	SLV 13	0.85	No
ini.	2	1274	-435.47	741.78	SLV 4	1.7	Si
fin.	2	-2093	905.65	741.78	SLV 4	0.82	No
ini.	2	-698	375.76	741.78	SLV 6	1.97	Si
fin.	2	-1226	709.7	741.78	SLV 6	1.05	Si
ini.	2	-1384	510.01	741.78	SLV 14	1.45	Si
fin.	2	2470	-873.82	741.78	SLV 14	0.85	No
ini.	2	1274	-435.47	741.78	SLV 3	1.7	Si
fin.	2	-2093	905.65	741.78	SLV 3	0.82	No
ini.	2	-811	245.61	741.78	SLV 15	3.02	Si
fin.	2	2872	-1108.79	741.78	SLV 15	0.67	No
ini.	2	701	-171.08	741.78	SLV 2	4.34	Si
fin.	2	-2495	1140.62	741.78	SLV 2	0.65	No
ini.	2	-811	245.61	741.78	SLV 16	3.02	Si
fin.	2	2872	-1108.79	741.78	SLV 16	0.67	No
ini.	2	701	-171.08	741.78	SLV 1	4.34	Si

Sezione	γM	N	M	Mu	Comb.	c.s.	Verifica
fin.	2	-2495	1140.62	741.78	SLV 1	0.65	No

Verifiche a taglio delle travi in muratura secondo §C8.7.1.3.1 in combinazioni sismiche

Sezione	γM	N	M	V	Vt	Vp	Vt fess. diag.	Vt,lim	Comb.	c.s.	Verifica
ini.	2	1274	-435.47	-694			659	0	SLV 4	0	No
fin.	2	-2093	905.65	1345			1217	460	SLV 4	0.34	No
ini.	2	-1384	510.01	-1189			1028	401	SLV 13	0.34	No
fin.	2	2470	-873.82	-620			659	0	SLV 13	0	No
ini.	2	588	-301.23	-1300			659	138	SLV 12	0.11	No
fin.	2	1603	-677.87	-841			659	0	SLV 12	0	No
ini.	2	588	-301.23	-1300			659	138	SLV 11	0.11	No
fin.	2	1603	-677.87	-841			659	0	SLV 11	0	No
ini.	2	1274	-435.47	-694			659	0	SLV 3	0	No
fin.	2	-2093	905.65	1345			1217	460	SLV 3	0.34	No
ini.	2	-811	245.61	-1345			875	346	SLV 16	0.26	No
fin.	2	2872	-1108.79	-1120			659	0	SLV 16	0	No
ini.	2	-811	245.61	-1345			875	346	SLV 15	0.26	No
fin.	2	2872	-1108.79	-1120			659	0	SLV 15	0	No
ini.	2	1214	-505.55	-1104			659	0	SLV 7	0	No
fin.	2	113	-73.53	-101			659	231	SLV 7	2.29	Si
ini.	2	1214	-505.55	-1104			659	0	SLV 8	0	No
fin.	2	113	-73.53	-101			659	231	SLV 8	2.29	Si
ini.	2	-1384	510.01	-1189			1028	401	SLV 14	0.34	No
fin.	2	2470	-873.82	-620			659	0	SLV 14	0	No

Tabella dei coefficienti di sicurezza minimi

Stato limite	Coeff.s.	Comb.	Verifica
PF_SLV	0.65	SLV 1	No
V_SLV	0	SLV 3	No
PF_SLU	7.953	SLU 44	Si
V_SLU	0.104	SLU 76	No

Trave di accoppiamento 41

Verifiche condotte secondo D.M. 17-01-18 (N.T.C.)

Dati geometrici

X ini.	Y ini.	Z ini.inf.	Z ini.sup.	H ini.	X fin.	Y fin.	Z fin.inf.	Z fin.sup	H fin.	Luce	Spessore	R. Trazione
-15.01	1.423	3.42	5	1.58	-15.01	2.223	3.42	5	1.58	0.8	0.14	30000

Caratteristiche del materiale

(Circolare 7 21-01-19 C8.5.I) Muratura in mattoni pieni e malta di calce LC2_Corti

fb_	fhk	fvk0	fhmedio	τ0	fv0	μ	ϕ	fvk,lim	E	G	FC
120000			172500	9000	20000	0.577	0.767	6500	320000000	128000000	1.2

Verifiche a pressoflessione delle travi in muratura in combinazioni non sismiche

Sezione	γM	N	M	Mu	Comb.	c.s.	Verifica
ini.	3	-1476	-1503.69	1773.18	SLU 81	1.18	Si
fin.	3	-1476	-5600.64	1773.18	SLU 81	0.32	No
ini.	3	-1461	-1480.67	1773.18	SLU 80	1.2	Si
fin.	3	-1461	-5575.32	1773.18	SLU 80	0.32	No
ini.	3	-1477	-1496.37	1773.18	SLU 77	1.18	Si
fin.	3	-1477	-5621.81	1773.18	SLU 77	0.32	No
ini.	3	-1466	-1483.31	1773.18	SLU 79	1.2	Si
fin.	3	-1466	-5587.33	1773.18	SLU 79	0.32	No
ini.	3	-1441	-1467.8	1773.18	SLU 75	1.21	Si
fin.	3	-1441	-5483.35	1773.18	SLU 75	0.32	No
ini.	3	-1507	-1529.61	1773.18	SLU 83	1.16	Si
fin.	3	-1507	-5727.09	1773.18	SLU 83	0.31	No
ini.	3	-1446	-1470.45	1773.18	SLU 74	1.21	Si
fin.	3	-1446	-5495.36	1773.18	SLU 74	0.32	No
ini.	3	-1502	-1526.96	1773.18	SLU 84	1.16	Si
fin.	3	-1502	-5715.08	1773.18	SLU 84	0.31	No
ini.	3	-1472	-1493.72	1773.18	SLU 78	1.19	Si
fin.	3	-1472	-5609.8	1773.18	SLU 78	0.32	No
ini.	3	-1471	-1501.04	1773.18	SLU 82	1.18	Si
fin.	3	-1471	-5588.63	1773.18	SLU 82	0.32	No

Verifiche a taglio delle travi in muratura secondo §C8.7.1.3.1 in combinazioni non sismiche

Sezione	γM	N	M	V	Vt	Vp	Vt fess. diag.	Vt,lim	Comb.	c.s.	Verifica
ini.	3	-1471	-1501.04	-4897			1440	555	SLU 82	0.11	No
fin.	3	-1471	-5588.63	-5339			1440	555	SLU 82	0.1	No
ini.	3	-1441	-1467.8	-4807			1428	551	SLU 75	0.11	No
fin.	3	-1441	-5483.35	-5249			1428	551	SLU 75	0.1	No
ini.	3	-1502	-1526.96	-5023			1453	559	SLU 84	0.11	No
fin.	3	-1502	-5715.08	-5465			1453	559	SLU 84	0.1	No
ini.	3	-1466	-1483.31	-4918			1438	554	SLU 79	0.11	No
fin.	3	-1466	-5587.33	-5359			1438	554	SLU 79	0.1	No
ini.	3	-1461	-1480.67	-4906			1436	554	SLU 80	0.11	No
fin.	3	-1461	-5575.32	-5348			1436	554	SLU 80	0.1	No
ini.	3	-1446	-1470.45	-4819			1430	552	SLU 74	0.11	No
fin.	3	-1446	-5495.36	-5260			1430	552	SLU 74	0.1	No
ini.	3	-1472	-1493.72	-4933			1441	555	SLU 78	0.11	No
fin.	3	-1472	-5609.8	-5374			1441	555	SLU 78	0.1	No
ini.	3	-1507	-1529.61	-5035			1455	559	SLU 83	0.11	No
fin.	3	-1507	-5727.09	-5476			1455	559	SLU 83	0.1	No

Sezione	γM	N	M	V	Vt	Vp	Vt fess. diag.	Vt,lim	Comb.	c.s.	Verifica
ini.	3	-1476	-1503.69	-4909			1442	555	SLU 81	0.11	No
fin.	3	-1476	-5600.64	-5351			1442	555	SLU 81	0.1	No
ini.	3	-1477	-1496.37	-4945			1443	556	SLU 77	0.11	No
fin.	3	-1477	-5621.81	-5386			1443	556	SLU 77	0.1	No

Verifiche a pressoflessione delle travi in muratura in combinazioni sismiche

Sezione	γM	N	M	Mu	Comb.	c.s.	Verifica
ini.	2	-5353	-2907.88	2659.77	SLV 11	0.91	No
fin.	2	-3575	-11458.37	2659.77	SLV 11	0.23	No
ini.	2	-154	-760.7	2659.77	SLV 13	3.5	Si
fin.	2	-328	-4097.42	2659.77	SLV 13	0.65	No
ini.	2	-5073	-2713.85	2659.77	SLV 8	0.98	No
fin.	2	-3494	-9941.3	2659.77	SLV 8	0.27	No
ini.	2	-5353	-2907.88	2659.77	SLV 12	0.91	No
fin.	2	-3575	-11458.37	2659.77	SLV 12	0.23	No
ini.	2	-2704	-1856.19	2659.77	SLV 15	1.43	Si
fin.	2	-1871	-8311.67	2659.77	SLV 15	0.32	No
ini.	2	3426	937.76	2659.77	SLV 5	2.84	Si
fin.	2	1649	4106.19	2659.77	SLV 5	0.65	No
ini.	2	3426	937.76	2659.77	SLV 6	2.84	Si
fin.	2	1649	4106.19	2659.77	SLV 6	0.65	No
ini.	2	-154	-760.7	2659.77	SLV 14	3.5	Si
fin.	2	-328	-4097.42	2659.77	SLV 14	0.65	No
ini.	2	-5073	-2713.85	2659.77	SLV 7	0.98	No
fin.	2	-3494	-9941.3	2659.77	SLV 7	0.27	No
ini.	2	-2704	-1856.19	2659.77	SLV 16	1.43	Si
fin.	2	-1871	-8311.67	2659.77	SLV 16	0.32	No

Verifiche a taglio delle travi in muratura secondo §C8.7.1.3.1 in combinazioni sismiche

Sezione	γM	N	M	V	Vt	Vp	Vt fess. diag.	Vt,lim	Comb.	c.s.	Verifica
ini.	2	3426	937.76	9816			1278	0	SLV 5	0	No
fin.	2	1649	4106.19	5744			1278	0	SLV 5	0	No
ini.	2	3426	937.76	9816			1278	0	SLV 6	0	No
fin.	2	1649	4106.19	5744			1278	0	SLV 6	0	No
ini.	2	-5353	-2907.88	-16222			3419	1162	SLV 12	0.07	No
fin.	2	-3575	-11458.37	-12819			2708	989	SLV 12	0.08	No
ini.	2	-5073	-2713.85	-14339			3307	1137	SLV 8	0.08	No
fin.	2	-3494	-9941.3	-11022			2675	981	SLV 8	0.09	No
ini.	2	777	-113.94	3559			1278	262	SLV 2	0.07	No
fin.	2	-56	959.48	1972			1300	493	SLV 2	0.25	No
ini.	2	3146	743.73	7933			1278	0	SLV 10	0	No
fin.	2	1567	2589.12	3947			1278	0	SLV 10	0	No
ini.	2	777	-113.94	3559			1278	262	SLV 1	0.07	No
fin.	2	-56	959.48	1972			1300	493	SLV 1	0.25	No
ini.	2	3146	743.73	7933			1278	0	SLV 9	0	No
fin.	2	1567	2589.12	3947			1278	0	SLV 9	0	No
ini.	2	-5073	-2713.85	-14339			3307	1137	SLV 7	0.08	No
fin.	2	-3494	-9941.3	-11022			2675	981	SLV 7	0.09	No
ini.	2	-5353	-2907.88	-16222			3419	1162	SLV 11	0.07	No
fin.	2	-3575	-11458.37	-12819			2708	989	SLV 11	0.08	No

Tabella dei coefficienti di sicurezza minimi

Stato limite	Coeff.s.	Comb.	Verifica
PF_SLV	0.232	SLV 11	No
V_SLV	0	SLV 5	No
PF_SLU	0.31	SLU 83	No
V_SLU	0.102	SLU 83	No

Trave di accoppiamento 42

Verifiche condotte secondo D.M. 17-01-18 (N.T.C.)

Dati geometrici

X ini.	Y ini.	Z ini.inf.	Z ini.sup.	H ini.	X fin.	Y fin.	Z fin.inf.	Z fin.sup	H fin.	Luce	Spessore	R. Trazione
-13.727	0	3.42	5	1.58	-13.727	1	3.42	5	1.58	1	0.28	30000

Caratteristiche del materiale

(Circolare 7 21-01-19 C8.5.I) Muratura in mattoni pieni e malta di calce LC2_Corti

fb_	fhk	fvk0	fhmedio	τ0	fv0	μ	ϕ	fvk,lim	E	G	FC
120000			172500	9000	20000	0.577	0.767	6500	320000000	128000000	1.2

Verifiche a pressoflessione delle travi in muratura in combinazioni non sismiche

Sezione	γM	N	M	Mu	Comb.	c.s.	Verifica
ini.	3	11	-3564.21	3546.36	SLU 71	0.99	No
fin.	3	11	-277.66	3546.36	SLU 71	12.77	Si
ini.	3	11	-3493.09	3546.36	SLU 66	1.02	Si
fin.	3	11	-270.08	3546.36	SLU 66	13.13	Si
ini.	3	8	-3899.32	3546.36	SLU 79	0.91	No
fin.	3	8	-307.76	3546.36	SLU 79	11.52	Si
ini.	3	6	-3827.24	3546.36	SLU 81	0.93	No
fin.	3	6	-298.35	3546.36	SLU 81	11.89	Si
ini.	3	9	-3508.34	3546.36	SLU 78	1.01	Si
fin.	3	9	-260.82	3546.36	SLU 78	13.6	Si
ini.	3	11	-3600.94	3546.36	SLU 69	0.98	No
fin.	3	11	-281.23	3546.36	SLU 69	12.61	Si
ini.	3	6	-3935.09	3546.36	SLU 83	0.9	No

Sezione	γM	N	M	Mu	Comb.	c.s.	Verifica
fin.	3	6	-309.51	3546.36	SLU 83	11.46	Si
ini.	3	8	-3936.04	3546.36	SLU 77	0.9	No
fin.	3	8	-311.33	3546.36	SLU 77	11.39	Si
ini.	3	7	-3507.38	3546.36	SLU 84	1.01	Si
fin.	3	7	-258.99	3546.36	SLU 84	13.69	Si
ini.	3	8	-3828.2	3546.36	SLU 74	0.93	No
fin.	3	8	-300.18	3546.36	SLU 74	11.81	Si

Verifiche a taglio delle travi in muratura secondo §C8.7.1.3.1 in combinazioni non sismiche

Sezione	γM	N	M	V	Vt	Vp	Vt fess. diag.	Vt,lim	Comb.	c.s.	Verifica
ini.	3	11	-3600.94	3895			1704	639	SLU 69	0.16	No
fin.	3	11	-281.23	2788			1704	639	SLU 69	0.23	No
ini.	3	11	-3493.09	3798			1704	639	SLU 66	0.17	No
fin.	3	11	-270.08	2692			1704	639	SLU 66	0.24	No
ini.	3	6	-3935.09	4201			1704	640	SLU 83	0.15	No
fin.	3	6	-309.51	3094			1704	640	SLU 83	0.21	No
ini.	3	8	-3899.32	4167			1704	639	SLU 79	0.15	No
fin.	3	8	-307.76	3060			1704	639	SLU 79	0.21	No
ini.	3	7	-3507.38	3824			1704	640	SLU 84	0.17	No
fin.	3	7	-258.99	2717			1704	640	SLU 84	0.24	No
ini.	3	11	-3564.21	3862			1704	639	SLU 71	0.17	No
fin.	3	11	-277.66	2755			1704	639	SLU 71	0.23	No
ini.	3	8	-3828.2	4103			1704	639	SLU 74	0.16	No
fin.	3	8	-300.18	2997			1704	639	SLU 74	0.21	No
ini.	3	8	-3936.04	4200			1704	639	SLU 77	0.15	No
fin.	3	8	-311.33	3093			1704	639	SLU 77	0.21	No
ini.	3	6	-3827.24	4104			1704	640	SLU 81	0.16	No
fin.	3	6	-298.35	2998			1704	640	SLU 81	0.21	No
ini.	3	9	-3508.34	3823			1704	639	SLU 78	0.17	No
fin.	3	9	-260.82	2716			1704	639	SLU 78	0.24	No

Verifiche a pressoflessione delle travi in muratura in combinazioni sismiche

Sezione	γM	N	M	Mu	Comb.	c.s.	Verifica
ini.	2	268	6355.97	5319.53	SLV 12	0.84	No
fin.	2	1178	555.99	5319.53	SLV 12	9.57	Si
ini.	2	708	-6024.13	5319.53	SLV 1	0.88	No
fin.	2	-548	-291.43	5319.53	SLV 1	18.25	Si
ini.	2	-252	-11453.99	5319.53	SLV 6	0.46	No
fin.	2	-1163	-941.75	5319.53	SLV 6	5.65	Si
ini.	2	781	5826.11	5319.53	SLV 8	0.91	No
fin.	2	1043	639.14	5319.53	SLV 8	8.32	Si
ini.	2	-766	-10924.13	5319.53	SLV 10	0.49	No
fin.	2	-1028	-1024.9	5319.53	SLV 10	5.19	Si
ini.	2	-252	-11453.99	5319.53	SLV 5	0.46	No
fin.	2	-1163	-941.75	5319.53	SLV 5	5.65	Si
ini.	2	708	-6024.13	5319.53	SLV 2	0.88	No
fin.	2	-548	-291.43	5319.53	SLV 2	18.25	Si
ini.	2	268	6355.97	5319.53	SLV 11	0.84	No
fin.	2	1178	555.99	5319.53	SLV 11	9.57	Si
ini.	2	-766	-10924.13	5319.53	SLV 9	0.49	No
fin.	2	-1028	-1024.9	5319.53	SLV 9	5.19	Si
ini.	2	781	5826.11	5319.53	SLV 7	0.91	No
fin.	2	1043	639.14	5319.53	SLV 7	8.32	Si

Verifiche a taglio delle travi in muratura secondo §C8.7.1.3.1 in combinazioni sismiche

Sezione	γM	N	M	V	Vt	Vp	Vt fess. diag.	Vt,lim	Comb.	c.s.	Verifica
ini.	2	-1003	-4257.92	6250			2957	1159	SLV 14	0.19	No
fin.	2	-99	-568.6	3976			2595	983	SLV 14	0.25	No
ini.	2	781	5826.11	-5209			2556	774	SLV 7	0.15	No
fin.	2	1043	639.14	-5740			2556	699	SLV 7	0.12	No
ini.	2	-766	-10924.13	10801			2862	1116	SLV 10	0.1	No
fin.	2	-1028	-1024.9	9638			2967	1164	SLV 10	0.12	No
ini.	2	-252	-11453.99	10107			2657	1015	SLV 5	0.1	No
fin.	2	-1163	-941.75	9823			3021	1188	SLV 5	0.12	No
ini.	2	-252	-11453.99	10107			2657	1015	SLV 6	0.1	No
fin.	2	-1163	-941.75	9823			3021	1188	SLV 6	0.12	No
ini.	2	268	6355.97	-4516			2556	902	SLV 12	0.2	No
fin.	2	1178	555.99	-5925			2556	658	SLV 12	0.11	No
ini.	2	-766	-10924.13	10801			2862	1116	SLV 9	0.1	No
fin.	2	-1028	-1024.9	9638			2967	1164	SLV 9	0.12	No
ini.	2	781	5826.11	-5209			2556	774	SLV 8	0.15	No
fin.	2	1043	639.14	-5740			2556	699	SLV 8	0.12	No
ini.	2	268	6355.97	-4516			2556	902	SLV 11	0.2	No
fin.	2	1178	555.99	-5925			2556	658	SLV 11	0.11	No
ini.	2	-1003	-4257.92	6250			2957	1159	SLV 13	0.19	No
fin.	2	-99	-568.6	3976			2595	983	SLV 13	0.25	No

Tabella dei coefficienti di sicurezza minimi

Stato limite	Coeff.s.	Comb.	Verifica
PF_SLV	0.464	SLV 5	No
V_SLV	0.1	SLV 5	No
PF_SLU	0.901	SLU 77	No
V_SLU	0.152	SLU 77	No

Trave di accoppiamento 43

Verifiche condotte secondo D.M. 17-01-18 (N.T.C.)

Dati geometrici

X ini.	Y ini.	Z ini.inf.	Z ini.sup.	H ini.	X fin.	Y fin.	Z fin.inf.	Z fin.sup	H fin.	Luce	Spessore	R. Trazione
-17.793	6.64	1.32	2.22	0.9	-16.793	6.64	1.32	2.22	0.9	1	0.28	30000

Caratteristiche del materiale

(Circolare 7 21-01-19 C8.5.I) Muratura in mattoni pieni e malta di calce LC2_Corti

fb_	fhk	fvk0	fhmedio	τ0	fv0	μ	ϕ	fvk,lim	E	G	FC
120000			172500	9000	20000	0.577	0.767	6500	320000000	128000000	1.2

Verifiche a pressoflessione delle travi in muratura in combinazioni non sismiche

Sezione	γM	N	M	Mu	Comb.	c.s.	Verifica
ini.	3	5267	854.98	1150.68	SLU 81	1.35	Si
fin.	3	3780	568.69	1150.68	SLU 81	2.02	Si
ini.	3	5262	856.5	1150.68	SLU 78	1.34	Si
fin.	3	3779	570.13	1150.68	SLU 78	2.02	Si
ini.	3	5356	867.98	1150.68	SLU 84	1.33	Si
fin.	3	3847	578.13	1150.68	SLU 84	1.99	Si
ini.	3	5171	843.35	1150.68	SLU 75	1.36	Si
fin.	3	3711	560.57	1150.68	SLU 75	2.05	Si
ini.	3	5172	843.51	1150.68	SLU 74	1.36	Si
fin.	3	3712	560.7	1150.68	SLU 74	2.05	Si
ini.	3	5357	868.13	1150.68	SLU 83	1.33	Si
fin.	3	3848	578.26	1150.68	SLU 83	1.99	Si
ini.	3	5224	851.07	1150.68	SLU 79	1.35	Si
fin.	3	3754	564.32	1150.68	SLU 79	2.04	Si
ini.	3	5222	850.92	1150.68	SLU 80	1.35	Si
fin.	3	3753	564.19	1150.68	SLU 80	2.04	Si
ini.	3	5263	856.65	1150.68	SLU 77	1.34	Si
fin.	3	3779	570.26	1150.68	SLU 77	2.02	Si
ini.	3	5265	854.83	1150.68	SLU 82	1.35	Si
fin.	3	3780	568.56	1150.68	SLU 82	2.02	Si

Verifiche a taglio delle travi in muratura secondo §C8.7.1.3.1 in combinazioni non sismiche

Sezione	γM	N	M	V	Vt	Vp	Vt fess. diag.	Vt,lim	Comb.	c.s.	Verifica
ini.	3	3218	544.12	-1487			873	0	SLU 1	0	No
fin.	3	2311	349.72	889			873	0	SLU 1	0	No
ini.	3	4716	779.64	-2151			873	0	SLU 58	0	No
fin.	3	3390	510.02	1332			873	0	SLU 58	0	No
ini.	3	4755	785.22	-2169			873	0	SLU 56	0	No
fin.	3	3415	515.97	1351			873	0	SLU 56	0	No
ini.	3	4758	783.39	-2143			873	0	SLU 61	0	No
fin.	3	3416	514.26	1339			873	0	SLU 61	0	No
ini.	3	4623	766.24	-2105			873	0	SLU 55	0	No
fin.	3	3322	500.24	1299			873	0	SLU 55	0	No
ini.	3	4759	783.55	-2142			873	0	SLU 60	0	No
fin.	3	3416	514.39	1339			873	0	SLU 60	0	No
ini.	3	4754	785.06	-2169			873	0	SLU 57	0	No
fin.	3	3415	515.84	1351			873	0	SLU 57	0	No
ini.	3	4715	779.48	-2151			873	0	SLU 59	0	No
fin.	3	3390	509.89	1332			873	0	SLU 59	0	No
ini.	3	4664	772.07	-2122			873	0	SLU 53	0	No
fin.	3	3348	506.4	1318			873	0	SLU 53	0	No
ini.	3	4663	771.92	-2123			873	0	SLU 54	0	No
fin.	3	3348	506.27	1318			873	0	SLU 54	0	No

Verifiche a pressoflessione delle travi in muratura in combinazioni sismiche

Sezione	γM	N	M	Mu	Comb.	c.s.	Verifica
ini.	2	9465	-623.67	1726.01	SLV 3	2.77	Si
fin.	2	3743	3296.19	1726.01	SLV 3	0.52	No
ini.	2	15475	2622.18	1726.01	SLV 7	0.66	No
fin.	2	13997	2557.52	1726.01	SLV 7	0.67	No
ini.	2	4271	3375.43	1726.01	SLV 16	0.51	No
fin.	2	8626	-1675.9	1726.01	SLV 16	1.03	Si
ini.	2	-6891	-2652.57	1726.01	SLV 6	0.65	No
fin.	2	-10417	-304.07	1726.01	SLV 6	5.68	Si
ini.	2	9465	-623.67	1726.01	SLV 4	2.77	Si
fin.	2	3743	3296.19	1726.01	SLV 4	0.52	No
ini.	2	4271	3375.43	1726.01	SLV 15	0.51	No
fin.	2	8626	-1675.9	1726.01	SLV 15	1.03	Si
ini.	2	15475	2622.18	1726.01	SLV 8	0.66	No
fin.	2	13997	2557.52	1726.01	SLV 8	0.67	No
ini.	2	13917	3821.91	1726.01	SLV 12	0.45	No
fin.	2	15462	1065.89	1726.01	SLV 12	1.62	Si
ini.	2	13917	3821.91	1726.01	SLV 11	0.45	No
fin.	2	15462	1065.89	1726.01	SLV 11	1.62	Si
ini.	2	-6891	-2652.57	1726.01	SLV 5	0.65	No
fin.	2	-10417	-304.07	1726.01	SLV 5	5.68	Si

Verifiche a taglio delle travi in muratura secondo §C8.7.1.3.1 in combinazioni sismiche

Sezione	γM	N	M	V	Vt	Vp	Vt fess. diag.	Vt,lim	Comb.	c.s.	Verifica
ini.	2	-2438	1793	-7050			2188	845	SLV 14	0.12	No
fin.	2	1302	-2534.37	-6356			1310	0	SLV 14	0	No
ini.	2	9465	-623.67	3847			1310	0	SLV 3	0	No
fin.	2	3743	3296.19	8327			1310	0	SLV 3	0	No
ini.	2	13917	3821.91	-6014			1310	0	SLV 12	0	No
fin.	2	15462	1065.89	-333			1310	0	SLV 12	0	No
ini.	2	-2438	1793	-7050			2188	845	SLV 13	0.12	No
fin.	2	1302	-2534.37	-6356			1310	0	SLV 13	0	No
ini.	2	9465	-623.67	3847			1310	0	SLV 4	0	No

Sezione	γM	N	M	V	Vt	Vp	Vt fess. diag.	Vt,lim	Comb.	c.s.	Verifica
fin.	2	3743	3296.19	8327			1310	0	SLV 4	0	No
ini.	2	2755	-2206.09	5376			1310	0	SLV 1	0	No
fin.	2	-3581	2437.72	7840			2599	966	SLV 1	0.12	No
ini.	2	15475	2622.18	-2286			1310	0	SLV 8	0	No
fin.	2	13997	2557.52	3926			1310	0	SLV 8	0	No
ini.	2	13917	3821.91	-6014			1310	0	SLV 11	0	No
fin.	2	15462	1065.89	-333			1310	0	SLV 11	0	No
ini.	2	2755	-2206.09	5376			1310	0	SLV 2	0	No
fin.	2	-3581	2437.72	7840			2599	966	SLV 2	0.12	No
ini.	2	15475	2622.18	-2286			1310	0	SLV 7	0	No
fin.	2	13997	2557.52	3926			1310	0	SLV 7	0	No

Tabella dei coefficienti di sicurezza minimi

Stato limite	Coeff.s.	Comb.	Verifica
PF_SLV	0.452	SLV 11	No
V_SLV	0	SLV 1	No
PF_SLU	1.325	SLU 83	Si
V_SLU	0	SLU 1	No

Trave di accoppiamento 44

Verifiche condotte secondo D.M. 17-01-18 (N.T.C.)

Dati geometrici

X ini.	Y ini.	Z ini.inf.	Z ini.sup.	H ini.	X fin.	Y fin.	Z fin.inf.	Z fin.sup	H fin.	Luce	Spessore	R. Trazione
-17.793	6.64	4.12	5	0.88	-16.793	6.64	4.12	5	0.88	1	0.28	30000

Caratteristiche del materiale

(Circolare 7 21-01-19 C8.5.I) Muratura in mattoni pieni e malta di calce LC2_Corti

fb_	fhk	fvk0	fhmedio	τ0	fv0	μ	ϕ	fvk,lim	E	G	FC
120000			172500	9000	20000	0.577	0.767	6500	320000000	128000000	1.2

Verifiche a pressoflessione delle travi in muratura in combinazioni non sismiche

Sezione	γM	N	M	Mu	Comb.	c.s.	Verifica
ini.	3	-2421	-321.54	1100.1	SLU 79	3.42	Si
fin.	3	-1591	-337.93	1100.1	SLU 79	3.26	Si
ini.	3	-2402	-318.14	1100.1	SLU 74	3.46	Si
fin.	3	-1586	-335.04	1100.1	SLU 74	3.28	Si
ini.	3	-2477	-326.66	1100.1	SLU 84	3.37	Si
fin.	3	-1637	-346.47	1100.1	SLU 84	3.18	Si
ini.	3	-2480	-326.77	1100.1	SLU 83	3.37	Si
fin.	3	-1640	-346.52	1100.1	SLU 83	3.17	Si
ini.	3	-2436	-319.37	1100.1	SLU 82	3.44	Si
fin.	3	-1623	-341.36	1100.1	SLU 82	3.22	Si
ini.	3	-2419	-321.43	1100.1	SLU 80	3.42	Si
fin.	3	-1588	-337.88	1100.1	SLU 80	3.26	Si
ini.	3	-2443	-325.43	1100.1	SLU 77	3.38	Si
fin.	3	-1600	-340.15	1100.1	SLU 77	3.23	Si
ini.	3	-2439	-319.49	1100.1	SLU 81	3.44	Si
fin.	3	-1625	-341.41	1100.1	SLU 81	3.22	Si
ini.	3	-2440	-325.31	1100.1	SLU 78	3.38	Si
fin.	3	-1598	-340.1	1100.1	SLU 78	3.23	Si
ini.	3	-2399	-318.03	1100.1	SLU 75	3.46	Si
fin.	3	-1583	-334.99	1100.1	SLU 75	3.28	Si

Verifiche a taglio delle travi in muratura secondo §C8.7.1.3.1 in combinazioni non sismiche

Sezione	γM	N	M	V	Vt	Vp	Vt fess. diag.	Vt,lim	Comb.	c.s.	Verifica
ini.	3	-2443	-325.43	4850			1695	626	SLU 77	0.13	No
fin.	3	-1600	-340.15	-3382			1398	540	SLU 77	0.16	No
ini.	3	-2399	-318.03	4756			1680	622	SLU 75	0.13	No
fin.	3	-1583	-334.99	-3330			1392	538	SLU 75	0.16	No
ini.	3	-2436	-319.37	4866			1693	626	SLU 82	0.13	No
fin.	3	-1623	-341.36	-3432			1406	542	SLU 82	0.16	No
ini.	3	-2421	-321.54	4807			1687	624	SLU 79	0.13	No
fin.	3	-1591	-337.93	-3360			1395	539	SLU 79	0.16	No
ini.	3	-2477	-326.66	4959			1707	630	SLU 84	0.13	No
fin.	3	-1637	-346.47	-3484			1411	544	SLU 84	0.16	No
ini.	3	-2419	-321.43	4806			1686	624	SLU 80	0.13	No
fin.	3	-1588	-337.88	-3359			1394	538	SLU 80	0.16	No
ini.	3	-2480	-326.77	4960			1708	630	SLU 83	0.13	No
fin.	3	-1640	-346.52	-3484			1412	544	SLU 83	0.16	No
ini.	3	-2439	-319.49	4867			1694	626	SLU 81	0.13	No
fin.	3	-1625	-341.41	-3432			1407	542	SLU 81	0.16	No
ini.	3	-2402	-318.14	4757			1681	623	SLU 74	0.13	No
fin.	3	-1586	-335.04	-3330			1393	538	SLU 74	0.16	No
ini.	3	-2440	-325.31	4849			1694	626	SLU 78	0.13	No
fin.	3	-1598	-340.1	-3382			1397	539	SLU 78	0.16	No

Verifiche a pressoflessione delle travi in muratura in combinazioni sismiche

Sezione	γM	N	M	Mu	Comb.	c.s.	Verifica
ini.	2	4528	1292.67	1650.16	SLV 14	1.28	Si
fin.	2	-5392	-1707.08	1650.16	SLV 14	0.97	No
ini.	2	-6801	-1605.93	1650.16	SLV 2	1.03	Si
fin.	2	4361	1449.35	1650.16	SLV 2	1.14	Si
ini.	2	-1608	23.62	1650.16	SLV 12	69.85	Si
fin.	2	-4503	-1039.07	1650.16	SLV 12	1.59	Si

Sezione	γM	N	M	Mu	Comb.	c.s.	Verifica
ini.	2	-7803	-1723.41	1650.16	SLV 4	0.96	No
fin.	2	3195	1247.78	1650.16	SLV 4	1.32	Si
ini.	2	-6801	-1605.93	1650.16	SLV 1	1.03	Si
fin.	2	4361	1449.35	1650.16	SLV 1	1.14	Si
ini.	2	-1608	23.62	1650.16	SLV 11	69.85	Si
fin.	2	-4503	-1039.07	1650.16	SLV 11	1.59	Si
ini.	2	3526	1175.19	1650.16	SLV 15	1.4	Si
fin.	2	-6557	-1908.65	1650.16	SLV 15	0.86	No
ini.	2	4528	1292.67	1650.16	SLV 13	1.28	Si
fin.	2	-5392	-1707.08	1650.16	SLV 13	0.97	No
ini.	2	-7803	-1723.41	1650.16	SLV 3	0.96	No
fin.	2	3195	1247.78	1650.16	SLV 3	1.32	Si
ini.	2	3526	1175.19	1650.16	SLV 16	1.4	Si
fin.	2	-6557	-1908.65	1650.16	SLV 16	0.86	No

Verifiche a taglio delle travi in muratura secondo §C8.7.1.3.1 in combinazioni sismiche

Sezione	γM	N	M	V	Vt	Vp	Vt fess. diag.	Vt,lim	Comb.	c.s.	Verifica
ini.	2	4528	1292.67	-5611			1253	0	SLV 13	0	No
fin.	2	-5392	-1707.08	-9064			3151	1093	SLV 13	0.12	No
ini.	2	-7803	-1723.41	11928			3999	1276	SLV 4	0.11	No
fin.	2	3195	1247.78	4621			1253	0	SLV 4	0	No
ini.	2	-6801	-1605.93	10797			3646	1204	SLV 2	0.11	No
fin.	2	4361	1449.35	5314			1253	0	SLV 2	0	No
ini.	2	-1667	-454.37	3735			1839	723	SLV 6	0.19	No
fin.	2	2306	579.77	1089			1253	0	SLV 6	0	No
ini.	2	4528	1292.67	-5611			1253	0	SLV 14	0	No
fin.	2	-5392	-1707.08	-9064			3151	1093	SLV 14	0.12	No
ini.	2	1732	415.21	-1187			1253	0	SLV 10	0	No
fin.	2	-620	-367.16	-3224			1471	578	SLV 10	0.18	No
ini.	2	-7803	-1723.41	11928			3999	1276	SLV 3	0.11	No
fin.	2	3195	1247.78	4621			1253	0	SLV 3	0	No
ini.	2	-1667	-454.37	3735			1839	723	SLV 5	0.19	No
fin.	2	2306	579.77	1089			1253	0	SLV 5	0	No
ini.	2	-6801	-1605.93	10797			3646	1204	SLV 1	0.11	No
fin.	2	4361	1449.35	5314			1253	0	SLV 1	0	No
ini.	2	1732	415.21	-1187			1253	0	SLV 9	0	No
fin.	2	-620	-367.16	-3224			1471	578	SLV 9	0.18	No

Tabella dei coefficienti di sicurezza minimi

Stato limite	Coeff.s.	Comb.	Verifica
PF_SLV	0.865	SLV 15	No
V_SLV	0	SLV 1	No
PF_SLU	3.175	SLU 83	Si
V_SLU	0.127	SLU 84	No

Trave di accoppiamento 45

Verifiche condotte secondo D.M. 17-01-18 (N.T.C.)

Dati geometrici

X ini.	Y ini.	Z ini.inf.	Z ini.sup.	H ini.	X fin.	Y fin.	Z fin.inf.	Z fin.sup	H fin.	Luce	Spessore	R. Trazione
-12.868	6.64	1.32	2.22	0.9	-11.868	6.64	1.32	2.22	0.9	1	0.28	30000

Caratteristiche del materiale

(Circolare 7 21-01-19 C8.5.I) Muratura in mattoni pieni e malta di calce LC2_Corti

fb_	fhk	fvk0	fhmedio	τ0	fv0	μ	ϕ	fvk,lim	E	G	FC
120000			172500	9000	20000	0.577	0.767	6500	320000000	128000000	1.2

Verifiche a pressoflessione delle travi in muratura in combinazioni non sismiche

Sezione	γM	N	M	Mu	Comb.	c.s.	Verifica
ini.	3	2463	790.59	1150.68	SLU 80	1.46	Si
fin.	3	2549	326.86	1150.68	SLU 80	3.52	Si
ini.	3	2454	791.27	1150.68	SLU 82	1.45	Si
fin.	3	2524	339.17	1150.68	SLU 82	3.39	Si
ini.	3	2431	780.2	1150.68	SLU 74	1.47	Si
fin.	3	2504	329.88	1150.68	SLU 74	3.49	Si
ini.	3	2453	791.16	1150.68	SLU 81	1.45	Si
fin.	3	2523	339.24	1150.68	SLU 81	3.39	Si
ini.	3	2462	790.49	1150.68	SLU 79	1.46	Si
fin.	3	2548	326.94	1150.68	SLU 79	3.52	Si
ini.	3	2483	796.17	1150.68	SLU 78	1.45	Si
fin.	3	2567	330	1150.68	SLU 78	3.49	Si
ini.	3	2504	807.13	1150.68	SLU 84	1.43	Si
fin.	3	2586	339.36	1150.68	SLU 84	3.39	Si
ini.	3	2482	796.06	1150.68	SLU 77	1.45	Si
fin.	3	2566	330.07	1150.68	SLU 77	3.49	Si
ini.	3	2432	780.31	1150.68	SLU 75	1.47	Si
fin.	3	2505	329.81	1150.68	SLU 75	3.49	Si
ini.	3	2503	807.02	1150.68	SLU 83	1.43	Si
fin.	3	2585	339.43	1150.68	SLU 83	3.39	Si

Verifiche a taglio delle travi in muratura secondo §C8.7.1.3.1 in combinazioni non sismiche

Sezione	γM	N	M	V	Vt	Vp	Vt fess. diag.	Vt,lim	Comb.	c.s.	Verifica
ini.	3	2240	715.77	-1529			873	0	SLU 60	0	No
fin.	3	2296	311.3	1668			873	0	SLU 60	0	No
ini.	3	2249	715.09	-1540			873	0	SLU 58	0	No

Sezione	γM	N	M	V	Vt	Vp	Vt fess. diag.	Vt,lim	Comb.	c.s.	Verifica
fin.	3	2320	299	1626			873	0	SLU 58	0	No
ini.	3	2268	720.67	-1555			873	0	SLU 56	0	No
fin.	3	2338	302.13	1647			873	0	SLU 56	0	No
ini.	3	2250	715.2	-1541			873	0	SLU 59	0	No
fin.	3	2321	298.92	1626			873	0	SLU 59	0	No
ini.	3	2200	699.41	-1496			873	0	SLU 55	0	No
fin.	3	2260	298.69	1608			873	0	SLU 55	0	No
ini.	3	2218	704.81	-1509			873	0	SLU 53	0	No
fin.	3	2277	301.94	1628			873	0	SLU 53	0	No
ini.	3	1544	487.4	-1022			873	0	SLU 1	0	No
fin.	3	1573	214.32	1127			873	0	SLU 1	0	No
ini.	3	2270	720.78	-1555			873	0	SLU 57	0	No
fin.	3	2339	302.06	1648			873	0	SLU 57	0	No
ini.	3	2241	715.87	-1529			873	0	SLU 61	0	No
fin.	3	2297	311.23	1668			873	0	SLU 61	0	No
ini.	3	2219	704.91	-1510			873	0	SLU 54	0	No
fin.	3	2278	301.87	1629			873	0	SLU 54	0	No

Verifiche a pressoflessione delle travi in muratura in combinazioni sismiche

Sezione	γM	N	M	Mu	Comb.	c.s.	Verifica
ini.	2	2223	3688.95	1726.01	SLV 15	0.47	No
fin.	2	7086	-915.05	1726.01	SLV 15	1.89	Si
ini.	2	11344	2340.28	1726.01	SLV 7	0.74	No
fin.	2	6350	2927.48	1726.01	SLV 7	0.59	No
ini.	2	10053	3780	1726.01	SLV 12	0.46	No
fin.	2	8546	1851.43	1726.01	SLV 12	0.93	No
ini.	2	-6721	-2718.92	1726.01	SLV 6	0.63	No
fin.	2	-5138	-1389.92	1726.01	SLV 6	1.24	Si
ini.	2	10053	3780	1726.01	SLV 11	0.46	No
fin.	2	8546	1851.43	1726.01	SLV 11	0.93	No
ini.	2	2223	3688.95	1726.01	SLV 16	0.47	No
fin.	2	7086	-915.05	1726.01	SLV 16	1.89	Si
ini.	2	11344	2340.28	1726.01	SLV 8	0.74	No
fin.	2	6350	2927.48	1726.01	SLV 8	0.59	No
ini.	2	6529	-1110.11	1726.01	SLV 3	1.55	Si
fin.	2	-232	2671.78	1726.01	SLV 3	0.65	No
ini.	2	-6721	-2718.92	1726.01	SLV 5	0.63	No
fin.	2	-5138	-1389.92	1726.01	SLV 5	1.24	Si
ini.	2	6529	-1110.11	1726.01	SLV 4	1.55	Si
fin.	2	-232	2671.78	1726.01	SLV 4	0.65	No

Verifiche a taglio delle travi in muratura secondo §C8.7.1.3.1 in combinazioni sismiche

Sezione	γM	N	M	V	Vt	Vp	Vt fess. diag.	Vt,lim	Comb.	c.s.	Verifica
ini.	2	11344	2340.28	-8			1310	0	SLV 8	0	No
fin.	2	6350	2927.48	5723			1310	0	SLV 8	0	No
ini.	2	11344	2340.28	-8			1310	0	SLV 7	0	No
fin.	2	6350	2927.48	5723			1310	0	SLV 7	0	No
ini.	2	6529	-1110.11	5367			1310	0	SLV 3	0	No
fin.	2	-232	2671.78	8884			1394	537	SLV 3	0.06	No
ini.	2	-3197	2171.19	-7623			2461	927	SLV 13	0.12	No
fin.	2	3640	-2210.27	-6420			1310	0	SLV 13	0	No
ini.	2	10053	3780	-4068			1310	0	SLV 12	0	No
fin.	2	8546	1851.43	1566			1310	0	SLV 12	0	No
ini.	2	2223	3688.95	-8169			1310	0	SLV 16	0	No
fin.	2	7086	-915.05	-4973			1310	0	SLV 16	0	No
ini.	2	6529	-1110.11	5367			1310	0	SLV 4	0	No
fin.	2	-232	2671.78	8884			1394	537	SLV 4	0.06	No
ini.	2	2223	3688.95	-8169			1310	0	SLV 15	0	No
fin.	2	7086	-915.05	-4973			1310	0	SLV 15	0	No
ini.	2	-3197	2171.19	-7623			2461	927	SLV 14	0.12	No
fin.	2	3640	-2210.27	-6420			1310	0	SLV 14	0	No
ini.	2	10053	3780	-4068			1310	0	SLV 11	0	No
fin.	2	8546	1851.43	1566			1310	0	SLV 11	0	No

Tabella dei coefficienti di sicurezza minimi

Stato limite	Coeff.s.	Comb.	Verifica
PF_SLV	0.457	SLV 11	No
V_SLV	0	SLV 3	No
PF_SLU	1.426	SLU 84	Si
V_SLU	0	SLU 1	No

Trave di accoppiamento 46

Verifiche condotte secondo D.M. 17-01-18 (N.T.C.)

Dati geometrici

X ini.	Y ini.	Z ini.inf.	Z ini.sup.	H ini.	X fin.	Y fin.	Z fin.inf.	Z fin.sup	H fin.	Luce	Spessore	R. Trazione
-12.868	6.64	4.12	5	0.88	-11.868	6.64	4.12	5	0.88	1	0.28	30000

Caratteristiche del materiale

(Circolare 7 21-01-19 C8.5.I) Muratura in mattoni pieni e malta di calce LC2_Corti

fb_	fhk	fvk0	fhmedio	τ0	fv0	μ	ϕ	fvk,lim	E	G	FC
120000			172500	9000	20000	0.577	0.767	6500	320000000	128000000	1.2

Verifiche a pressoflessione delle travi in muratura in combinazioni non sismiche

Sezione	γM	N	M	Mu	Comb.	c.s.	Verifica

Sezione	γM	N	M	Mu	Comb.	c.s.	Verifica
ini.	3	-1540	-90.93	1100.1	SLU 84	12.1	Si
fin.	3	-2337	-633.01	1100.1	SLU 84	1.74	Si
ini.	3	-1543	-91.11	1100.1	SLU 83	12.07	Si
fin.	3	-2339	-632.78	1100.1	SLU 83	1.74	Si
ini.	3	-1482	-84.39	1100.1	SLU 77	13.04	Si
fin.	3	-2273	-621.45	1100.1	SLU 77	1.77	Si
ini.	3	-1542	-93.94	1100.1	SLU 82	11.71	Si
fin.	3	-2315	-620.49	1100.1	SLU 82	1.77	Si
ini.	3	-1482	-87.23	1100.1	SLU 75	12.61	Si
fin.	3	-2250	-609.17	1100.1	SLU 75	1.81	Si
ini.	3	-1468	-82.89	1100.1	SLU 79	13.27	Si
fin.	3	-2256	-616.69	1100.1	SLU 79	1.78	Si
ini.	3	-1545	-94.12	1100.1	SLU 81	11.69	Si
fin.	3	-2316	-620.27	1100.1	SLU 81	1.77	Si
ini.	3	-1466	-82.71	1100.1	SLU 80	13.3	Si
fin.	3	-2254	-616.92	1100.1	SLU 80	1.78	Si
ini.	3	-1484	-87.41	1100.1	SLU 74	12.59	Si
fin.	3	-2251	-608.94	1100.1	SLU 74	1.81	Si
ini.	3	-1480	-84.22	1100.1	SLU 78	13.06	Si
fin.	3	-2272	-621.68	1100.1	SLU 78	1.77	Si

Verifiche a taglio delle travi in muratura secondo §C8.7.1.3.1 in combinazioni non sismiche

Sezione	γM	N	M	V	Vt	Vp	Vt fess. diag.	Vt,lim	Comb.	c.s.	Verifica
ini.	3	-1540	-90.93	1728			1377	533	SLU 84	0.31	No
fin.	3	-2337	-633.01	-3617			1658	616	SLU 84	0.17	No
ini.	3	-1484	-87.41	1665			1357	527	SLU 74	0.32	No
fin.	3	-2251	-608.94	-3487			1627	608	SLU 74	0.17	No
ini.	3	-1466	-82.71	1663			1351	524	SLU 80	0.32	No
fin.	3	-2254	-616.92	-3529			1628	608	SLU 80	0.17	No
ini.	3	-1543	-91.11	1728			1378	533	SLU 83	0.31	No
fin.	3	-2339	-632.78	-3616			1658	616	SLU 83	0.17	No
ini.	3	-1482	-87.23	1665			1357	526	SLU 75	0.32	No
fin.	3	-2250	-609.17	-3488			1627	608	SLU 75	0.17	No
ini.	3	-1545	-94.12	1714			1379	533	SLU 81	0.31	No
fin.	3	-2316	-620.27	-3549			1650	614	SLU 81	0.17	No
ini.	3	-1480	-84.22	1680			1356	526	SLU 78	0.31	No
fin.	3	-2272	-621.68	-3555			1635	610	SLU 78	0.17	No
ini.	3	-1542	-93.94	1713			1378	533	SLU 82	0.31	No
fin.	3	-2315	-620.49	-3551			1650	614	SLU 82	0.17	No
ini.	3	-1468	-82.89	1664			1352	525	SLU 79	0.32	No
fin.	3	-2256	-616.69	-3527			1629	608	SLU 79	0.17	No
ini.	3	-1482	-84.39	1680			1357	526	SLU 77	0.31	No
fin.	3	-2273	-621.45	-3554			1635	610	SLU 77	0.17	No

Verifiche a pressoflessione delle travi in muratura in combinazioni sismiche

Sezione	γM	N	M	Mu	Comb.	c.s.	Verifica
ini.	2	-4452	-2113.55	1650.16	SLV 2	0.78	No
fin.	2	2608	1648.64	1650.16	SLV 2	1	Si
ini.	2	3109	2054.19	1650.16	SLV 14	0.8	No
fin.	2	-4909	-2272.12	1650.16	SLV 14	0.73	No
ini.	2	-5143	-2174.76	1650.16	SLV 4	0.76	No
fin.	2	1849	1454.98	1650.16	SLV 4	1.13	Si
ini.	2	-5143	-2174.76	1650.16	SLV 3	0.76	No
fin.	2	1849	1454.98	1650.16	SLV 3	1.13	Si
ini.	2	-1035	462.85	1650.16	SLV 11	3.57	Si
fin.	2	-3923	-1319.45	1650.16	SLV 11	1.25	Si
ini.	2	3109	2054.19	1650.16	SLV 13	0.8	No
fin.	2	-4909	-2272.12	1650.16	SLV 13	0.73	No
ini.	2	2418	1992.98	1650.16	SLV 15	0.83	No
fin.	2	-5668	-2465.78	1650.16	SLV 15	0.67	No
ini.	2	2418	1992.98	1650.16	SLV 16	0.83	No
fin.	2	-5668	-2465.78	1650.16	SLV 16	0.67	No
ini.	2	-4452	-2113.55	1650.16	SLV 1	0.78	No
fin.	2	2608	1648.64	1650.16	SLV 1	1	Si
ini.	2	-1035	462.85	1650.16	SLV 12	3.57	Si
fin.	2	-3923	-1319.45	1650.16	SLV 12	1.25	Si

Verifiche a taglio delle travi in muratura secondo §C8.7.1.3.1 in combinazioni sismiche

Sezione	γM	N	M	V	Vt	Vp	Vt fess. diag.	Vt,lim	Comb.	c.s.	Verifica
ini.	2	1270	666.9	-1713			1253	0	SLV 10	0	No
fin.	2	-1393	-673.92	-3957			1743	688	SLV 10	0.17	No
ini.	2	-5143	-2174.76	8774			3063	1072	SLV 4	0.12	No
fin.	2	1849	1454.98	4711			1253	0	SLV 4	0	No
ini.	2	2418	1992.98	-6149			1253	0	SLV 15	0	No
fin.	2	-5668	-2465.78	-9774			3248	1116	SLV 15	0.11	No
ini.	2	2418	1992.98	-6149			1253	0	SLV 16	0	No
fin.	2	-5668	-2465.78	-9774			3248	1116	SLV 16	0.11	No
ini.	2	-5143	-2174.76	8774			3063	1072	SLV 3	0.12	No
fin.	2	1849	1454.98	4711			1253	0	SLV 3	0	No
ini.	2	3109	2054.19	-6512			1253	0	SLV 13	0	No
fin.	2	-4909	-2272.12	-9429			2980	1052	SLV 13	0.11	No
ini.	2	-4452	-2113.55	8411			2820	1012	SLV 2	0.12	No
fin.	2	2608	1648.64	5056			1253	0	SLV 2	0	No
ini.	2	-4452	-2113.55	8411			2820	1012	SLV 1	0.12	No
fin.	2	2608	1648.64	5056			1253	0	SLV 1	0	No
ini.	2	1270	666.9	-1713			1253	0	SLV 9	0	No
fin.	2	-1393	-673.92	-3957			1743	688	SLV 9	0.17	No
ini.	2	3109	2054.19	-6512			1253	0	SLV 14	0	No
fin.	2	-4909	-2272.12	-9429			2980	1052	SLV 14	0.11	No

Tabella dei coefficienti di sicurezza minimi

Stato limite	Coeff.s.	Comb.	Verifica
PF_SLV	0.669	SLV 15	No
V_SLV	0	SLV 1	No
PF_SLU	1.738	SLU 84	Si
V_SLU	0.17	SLU 84	No

Trave di accoppiamento 47

Verifiche condotte secondo D.M. 17-01-18 (N.T.C.)

Dati geometrici

X ini.	Y ini.	Z ini.inf.	Z ini.sup.	H ini.	X fin.	Y fin.	Z fin.inf.	Z fin.sup	H fin.	Luce	Spessore	R. Trazione
-7.943	6.64	1.32	2.22	0.9	-6.943	6.64	1.32	2.22	0.9	1	0.28	30000

Caratteristiche del materiale

(Circolare 7 21-01-19 C8.5.I) Muratura in mattoni pieni e malta di calce LC2_Corti

fb_	fhk	fvk0	fhmedio	τ0	fv0	μ	ϕ	fvk,lim	E	G	FC
120000			172500	9000	20000	0.577	0.767	6500	320000000	128000000	1.2

Verifiche a pressoflessione delle travi in muratura in combinazioni non sismiche

Sezione	γM	N	M	Mu	Comb.	c.s.	Verifica
ini.	3	2405	438.58	1150.68	SLU 83	2.62	Si
fin.	3	3490	897.24	1150.68	SLU 83	1.28	Si
ini.	3	2315	437.25	1150.68	SLU 80	2.63	Si
fin.	3	3384	866.33	1150.68	SLU 80	1.33	Si
ini.	3	2335	440.85	1150.68	SLU 78	2.61	Si
fin.	3	3411	874.01	1150.68	SLU 78	1.32	Si
ini.	3	2382	422.09	1150.68	SLU 81	2.73	Si
fin.	3	3436	895.2	1150.68	SLU 81	1.29	Si
ini.	3	2311	424.47	1150.68	SLU 74	2.71	Si
fin.	3	3357	871.52	1150.68	SLU 74	1.32	Si
ini.	3	2405	438.48	1150.68	SLU 84	2.62	Si
fin.	3	3491	897.7	1150.68	SLU 84	1.28	Si
ini.	3	2334	440.96	1150.68	SLU 77	2.61	Si
fin.	3	3411	873.55	1150.68	SLU 77	1.32	Si
ini.	3	2315	437.36	1150.68	SLU 79	2.63	Si
fin.	3	3383	865.87	1150.68	SLU 79	1.33	Si
ini.	3	2312	424.37	1150.68	SLU 75	2.71	Si
fin.	3	3357	871.97	1150.68	SLU 75	1.32	Si
ini.	3	2383	421.99	1150.68	SLU 82	2.73	Si
fin.	3	3437	895.66	1150.68	SLU 82	1.28	Si

Verifiche a taglio delle travi in muratura secondo §C8.7.1.3.1 in combinazioni non sismiche

Sezione	γM	N	M	V	Vt	Vp	Vt fess. diag.	Vt,lim	Comb.	c.s.	Verifica
ini.	3	2072	380.29	-691			873	0	SLU 53	0	No
fin.	3	3005	797.98	1999			873	0	SLU 53	0	No
ini.	3	2095	396.67	-737			873	0	SLU 57	0	No
fin.	3	3059	800.48	2004			873	0	SLU 57	0	No
ini.	3	2142	377.91	-678			873	0	SLU 60	0	No
fin.	3	3084	821.67	2056			873	0	SLU 60	0	No
ini.	3	2075	393.18	-727			873	0	SLU 58	0	No
fin.	3	3031	792.34	1978			873	0	SLU 58	0	No
ini.	3	2072	380.18	-691			873	0	SLU 54	0	No
fin.	3	3005	798.44	2002			873	0	SLU 54	0	No
ini.	3	2143	377.81	-678			873	0	SLU 61	0	No
fin.	3	3085	822.13	2059			873	0	SLU 61	0	No
ini.	3	2076	393.07	-727			873	0	SLU 59	0	No
fin.	3	3031	792.79	1980			873	0	SLU 59	0	No
ini.	3	1422	256.93	-437			873	0	SLU 1	0	No
fin.	3	2052	565.78	1419			873	0	SLU 1	0	No
ini.	3	2053	376.51	-680			873	0	SLU 55	0	No
fin.	3	2978	791.06	1980			873	0	SLU 55	0	No
ini.	3	2094	396.78	-738			873	0	SLU 56	0	No
fin.	3	3059	800.02	2001			873	0	SLU 56	0	No

Verifiche a pressoflessione delle travi in muratura in combinazioni sismiche

Sezione	γM	N	M	Mu	Comb.	c.s.	Verifica
ini.	2	4258	3047.27	1726.01	SLV 15	0.57	No
fin.	2	9007	541.78	1726.01	SLV 15	3.19	Si
ini.	2	12964	1044.45	1726.01	SLV 7	1.65	Si
fin.	2	9143	3861.76	1726.01	SLV 7	0.45	No
ini.	2	12964	1044.45	1726.01	SLV 8	1.65	Si
fin.	2	9143	3861.76	1726.01	SLV 8	0.45	No
ini.	2	-9833	-481.72	1726.01	SLV 10	3.58	Si
fin.	2	-4623	-2643.63	1726.01	SLV 10	0.65	No
ini.	2	12564	2440.95	1726.01	SLV 12	0.71	No
fin.	2	11720	3287.58	1726.01	SLV 12	0.53	No
ini.	2	12564	2440.95	1726.01	SLV 11	0.71	No
fin.	2	11720	3287.58	1726.01	SLV 11	0.53	No
ini.	2	-1127	-2484.54	1726.01	SLV 2	0.69	No
fin.	2	-4487	676.34	1726.01	SLV 2	2.55	Si
ini.	2	-9833	-481.72	1726.01	SLV 9	3.58	Si
fin.	2	-4623	-2643.63	1726.01	SLV 9	0.65	No
ini.	2	4258	3047.27	1726.01	SLV 16	0.57	No
fin.	2	9007	541.78	1726.01	SLV 16	3.19	Si
ini.	2	-1127	-2484.54	1726.01	SLV 1	0.69	No

Sezione	γM	N	M	Mu	Comb.	c.s.	Verifica
fin.	2	-4487	676.34	1726.01	SLV 1	2.55	Si

Verifiche a taglio delle travi in muratura secondo §C8.7.1.3.1 in combinazioni sismiche

Sezione	γM	N	M	V	Vt	Vp	Vt fess. diag.	Vt,lim	Comb.	c.s.	Verifica
ini.	2	12564	2440.95	-2919			1310	0	SLV 11	0	No
fin.	2	11720	3287.58	2503			1310	0	SLV 11	0	No
ini.	2	12564	2440.95	-2919			1310	0	SLV 12	0	No
fin.	2	11720	3287.58	2503			1310	0	SLV 12	0	No
ini.	2	5592	-1607.73	5704			1310	0	SLV 4	0	No
fin.	2	415	2455.71	7360			1310	404	SLV 4	0.05	No
ini.	2	12964	1044.45	896			1310	0	SLV 7	0	No
fin.	2	9143	3861.76	5553			1310	0	SLV 7	0	No
ini.	2	4258	3047.27	-7010			1310	0	SLV 15	0	No
fin.	2	9007	541.78	-2805			1310	0	SLV 15	0	No
ini.	2	-2461	2170.47	-6703			2196	847	SLV 14	0.13	No
fin.	2	4104	-1237.58	-4305			1310	0	SLV 14	0	No
ini.	2	12964	1044.45	896			1310	0	SLV 8	0	No
fin.	2	9143	3861.76	5553			1310	0	SLV 8	0	No
ini.	2	5592	-1607.73	5704			1310	0	SLV 3	0	No
fin.	2	415	2455.71	7360			1310	404	SLV 3	0.05	No
ini.	2	4258	3047.27	-7010			1310	0	SLV 16	0	No
fin.	2	9007	541.78	-2805			1310	0	SLV 16	0	No
ini.	2	-2461	2170.47	-6703			2196	847	SLV 13	0.13	No
fin.	2	4104	-1237.58	-4305			1310	0	SLV 13	0	No

Tabella dei coefficienti di sicurezza minimi

Stato limite	Coeff.s.	Comb.	Verifica
PF_SLV	0.447	SLV 7	No
V_SLV	0	SLV 3	No
PF_SLU	1.282	SLU 84	Si
V_SLU	0	SLU 1	No

Trave di accoppiamento 48

Verifiche condotte secondo D.M. 17-01-18 (N.T.C.)

Dati geometrici

X ini.	Y ini.	Z ini.inf.	Z ini.sup.	H ini.	X fin.	Y fin.	Z fin.inf.	Z fin.sup	H fin.	Luce	Spessore	R. Trazione
-7.943	6.64	4.12	5	0.88	-6.943	6.64	4.12	5	0.88	1	0.28	30000

Caratteristiche del materiale

(Circolare 7 21-01-19 C8.5.I) Muratura in mattoni pieni e malta di calce LC2_Corti

fb_	fhk	fvk0	fhmedio	τ0	fv0	μ	ϕ	fvk,lim	E	G	FC
120000			172500	9000	20000	0.577	0.767	6500	320000000	128000000	1.2

Verifiche a pressoflessione delle travi in muratura in combinazioni non sismiche

Sezione	γM	N	M	Mu	Comb.	c.s.	Verifica
ini.	3	-2064	-518.34	1100.1	SLU 81	2.12	Si
fin.	3	-1808	-245.54	1100.1	SLU 81	4.48	Si
ini.	3	-1970	-497.02	1100.1	SLU 76	2.21	Si
fin.	3	-1770	-245.51	1100.1	SLU 76	4.48	Si
ini.	3	-1976	-500.29	1100.1	SLU 77	2.2	Si
fin.	3	-1825	-258.37	1100.1	SLU 77	4.26	Si
ini.	3	-2052	-517.2	1100.1	SLU 83	2.13	Si
fin.	3	-1846	-255.63	1100.1	SLU 83	4.3	Si
ini.	3	-1982	-498.17	1100.1	SLU 73	2.21	Si
fin.	3	-1732	-235.42	1100.1	SLU 73	4.67	Si
ini.	3	-1988	-501.75	1100.1	SLU 75	2.19	Si
fin.	3	-1786	-248.33	1100.1	SLU 75	4.43	Si
ini.	3	-1975	-500.6	1100.1	SLU 78	2.2	Si
fin.	3	-1824	-258.42	1100.1	SLU 78	4.26	Si
ini.	3	-2064	-518.65	1100.1	SLU 82	2.12	Si
fin.	3	-1808	-245.59	1100.1	SLU 82	4.48	Si
ini.	3	-1988	-501.44	1100.1	SLU 74	2.19	Si
fin.	3	-1786	-248.28	1100.1	SLU 74	4.43	Si
ini.	3	-2052	-517.51	1100.1	SLU 84	2.13	Si
fin.	3	-1846	-255.67	1100.1	SLU 84	4.3	Si

Verifiche a taglio delle travi in muratura secondo §C8.7.1.3.1 in combinazioni non sismiche

Sezione	γM	N	M	V	Vt	Vp	Vt fess. diag.	Vt,lim	Comb.	c.s.	Verifica
ini.	3	-2052	-517.51	4115			1557	588	SLU 84	0.14	No
fin.	3	-1846	-255.67	-3936			1485	566	SLU 84	0.14	No
ini.	3	-1988	-501.75	3946			1535	581	SLU 75	0.15	No
fin.	3	-1786	-248.33	-3764			1464	560	SLU 75	0.15	No
ini.	3	-2064	-518.34	4095			1562	589	SLU 81	0.14	No
fin.	3	-1808	-245.54	-3847			1472	562	SLU 81	0.15	No
ini.	3	-1976	-500.29	3963			1530	580	SLU 77	0.15	No
fin.	3	-1825	-258.37	-3851			1477	564	SLU 77	0.15	No
ini.	3	-1958	-495.67	3929			1524	578	SLU 80	0.15	No
fin.	3	-1808	-255.56	-3816			1472	562	SLU 80	0.15	No
ini.	3	-1988	-501.44	3945			1535	581	SLU 74	0.15	No
fin.	3	-1786	-248.28	-3763			1464	560	SLU 74	0.15	No
ini.	3	-1975	-500.6	3964			1530	580	SLU 78	0.15	No
fin.	3	-1824	-258.42	-3851			1477	564	SLU 78	0.15	No
ini.	3	-2064	-518.65	4096			1561	589	SLU 82	0.14	No
fin.	3	-1808	-245.59	-3848			1471	562	SLU 82	0.15	No

Sezione	γM	N	M	V	Vt	Vp	Vt fess. diag.	Vt,lim	Comb.	c.s.	Verifica
ini.	3	-2052	-517.2	4113			1557	588	SLU 83	0.14	No
fin.	3	-1846	-255.63	-3935			1485	566	SLU 83	0.14	No
ini.	3	-1958	-495.36	3928			1524	578	SLU 79	0.15	No
fin.	3	-1809	-255.51	-3815			1472	562	SLU 79	0.15	No

Verifiche a pressoflessione delle travi in muratura in combinazioni sismiche

Sezione	γM	N	M	Mu	Comb.	c.s.	Verifica
ini.	2	2526	937.05	1650.16	SLV 16	1.76	Si
fin.	2	-6394	-1508.66	1650.16	SLV 16	1.09	Si
ini.	2	3664	1153.76	1650.16	SLV 14	1.43	Si
fin.	2	-5565	-1441.36	1650.16	SLV 14	1.14	Si
ini.	2	-4639	-1129.32	1650.16	SLV 7	1.46	Si
fin.	2	-1159	117.34	1650.16	SLV 7	14.06	Si
ini.	2	-5315	-1636.3	1650.16	SLV 1	1.01	Si
fin.	2	3977	1180.98	1650.16	SLV 1	1.4	Si
ini.	2	-5315	-1636.3	1650.16	SLV 2	1.01	Si
fin.	2	3977	1180.98	1650.16	SLV 2	1.4	Si
ini.	2	-4639	-1129.32	1650.16	SLV 8	1.46	Si
fin.	2	-1159	117.34	1650.16	SLV 8	14.06	Si
ini.	2	3664	1153.76	1650.16	SLV 13	1.43	Si
fin.	2	-5565	-1441.36	1650.16	SLV 13	1.14	Si
ini.	2	-6454	-1853.01	1650.16	SLV 4	0.89	No
fin.	2	3148	1113.68	1650.16	SLV 4	1.48	Si
ini.	2	2526	937.05	1650.16	SLV 15	1.76	Si
fin.	2	-6394	-1508.66	1650.16	SLV 15	1.09	Si
ini.	2	-6454	-1853.01	1650.16	SLV 3	0.89	No
fin.	2	3148	1113.68	1650.16	SLV 3	1.48	Si

Verifiche a taglio delle travi in muratura secondo §C8.7.1.3.1 in combinazioni sismiche

Sezione	γM	N	M	V	Vt	Vp	Vt fess. diag.	Vt,lim	Comb.	c.s.	Verifica
ini.	2	-845	-406.95	3277			1550	612	SLV 5	0.19	No
fin.	2	1604	341.68	1075			1253	0	SLV 5	0	No
ini.	2	3664	1153.76	-4060			1253	0	SLV 13	0	No
fin.	2	-5565	-1441.36	-9345			3212	1107	SLV 13	0.12	No
ini.	2	3664	1153.76	-4060			1253	0	SLV 14	0	No
fin.	2	-5565	-1441.36	-9345			3212	1107	SLV 14	0.12	No
ini.	2	-6454	-1853.01	9398			3524	1177	SLV 3	0.13	No
fin.	2	3148	1113.68	4414			1253	0	SLV 3	0	No
ini.	2	-845	-406.95	3277			1550	612	SLV 6	0.19	No
fin.	2	1604	341.68	1075			1253	0	SLV 6	0	No
ini.	2	-6454	-1853.01	9398			3524	1177	SLV 4	0.13	No
fin.	2	3148	1113.68	4414			1253	0	SLV 4	0	No
ini.	2	-5315	-1636.3	8622			3124	1087	SLV 1	0.13	No
fin.	2	3977	1180.98	5227			1253	0	SLV 1	0	No
ini.	2	-5315	-1636.3	8622			3124	1087	SLV 2	0.13	No
fin.	2	3977	1180.98	5227			1253	0	SLV 2	0	No
ini.	2	1849	430.07	-528			1253	0	SLV 9	0	No
fin.	2	-1259	-445.02	-3296			1696	670	SLV 9	0.2	No
ini.	2	1849	430.07	-528			1253	0	SLV 10	0	No
fin.	2	-1259	-445.02	-3296			1696	670	SLV 10	0.2	No

Tabella dei coefficienti di sicurezza minimi

Stato limite	Coeff.s.	Comb.	Verifica
PF_SLV	0.891	SLV 3	No
V_SLV	0	SLV 1	No
PF_SLU	2.121	SLU 82	Si
V_SLU	0.143	SLU 84	No

Trave di accoppiamento 49

Verifiche condotte secondo D.M. 17-01-18 (N.T.C.)

Dati geometrici

X ini.	Y ini.	Z ini.inf.	Z ini.sup.	H ini.	X fin.	Y fin.	Z fin.inf.	Z fin.sup	H fin.	Luce	Spessore	R. Trazione
-19.8	1.141	3.42	5	1.58	-20.6	1.141	3.42	5	1.58	0.8	0.28	30000

Caratteristiche del materiale

(Circolare 7 21-01-19 C8.5.I) Muratura in mattoni pieni e malta di calce LC2_Corti

fb_	fhk	fvk0	fhmedio	τ0	fv0	μ	ϕ	fvk,lim	E	G	FC
120000			172500	9000	20000	0.577	0.767	6500	320000000	128000000	1.2

Verifiche a pressoflessione delle travi in muratura in combinazioni non sismiche

Sezione	γM	N	M	Mu	Comb.	c.s.	Verifica
ini.	3	46	1931.2	3546.36	SLU 35	1.84	Si
fin.	3	46	129.15	3546.36	SLU 35	27.46	Si
ini.	3	-140	2143.52	3546.36	SLU 77	1.65	Si
fin.	3	-140	263.86	3546.36	SLU 77	13.44	Si
ini.	3	-190	2008.49	3546.36	SLU 74	1.77	Si
fin.	3	-190	367.84	3546.36	SLU 74	9.64	Si
ini.	3	-200	2005.5	3546.36	SLU 84	1.77	Si
fin.	3	-200	444.78	3546.36	SLU 84	7.97	Si
ini.	3	-158	2112.58	3546.36	SLU 79	1.68	Si
fin.	3	-158	279.66	3546.36	SLU 79	12.68	Si
ini.	3	-191	1957	3546.36	SLU 81	1.81	Si
fin.	3	-191	486.83	3546.36	SLU 81	7.28	Si
ini.	3	-199	2056.99	3546.36	SLU 78	1.72	Si

Sezione	γM	N	M	Mu	Comb.	c.s.	Verifica
fin.	3	-199	325.79	3546.36	SLU 78	10.89	Si
ini.	3	-141	2092.02	3546.36	SLU 83	1.7	Si
fin.	3	-141	382.85	3546.36	SLU 83	9.26	Si
ini.	3	-217	2026.06	3546.36	SLU 80	1.75	Si
fin.	3	-217	341.59	3546.36	SLU 80	10.38	Si
ini.	3	-249	1921.97	3546.36	SLU 75	1.85	Si
fin.	3	-249	429.78	3546.36	SLU 75	8.25	Si

Verifiche a taglio delle travi in muratura secondo §C8.7.1.3.1 in combinazioni non sismiche

Sezione	γM	N	M	V	Vt	Vp	Vt fess. diag.	Vt,lim	Comb.	c.s.	Verifica
ini.	3	-217	2026.06	-1135			1791	687	SLU 80	0.61	No
fin.	3	-217	341.59	-3138			1791	687	SLU 80	0.22	No
ini.	3	-13	1844.68	-1196			1709	644	SLU 36	0.54	No
fin.	3	-13	191.08	-2983			1709	644	SLU 36	0.22	No
ini.	3	-199	2056.99	-1193			1783	683	SLU 78	0.57	No
fin.	3	-199	325.79	-3196			1783	683	SLU 78	0.21	No
ini.	3	-140	2143.52	-1379			1760	671	SLU 77	0.49	No
fin.	3	-140	263.86	-3382			1760	671	SLU 77	0.2	No
ini.	3	46	1931.2	-1381			1704	631	SLU 35	0.46	No
fin.	3	46	129.15	-3169			1704	631	SLU 35	0.2	No
ini.	3	-190	2008.49	-1080			1780	681	SLU 74	0.63	No
fin.	3	-190	367.84	-3083			1780	681	SLU 74	0.22	No
ini.	3	45	1879.7	-1086			1704	631	SLU 41	0.58	No
fin.	3	45	248.14	-3038			1704	631	SLU 41	0.21	No
ini.	3	27	1900.26	-1323			1704	635	SLU 37	0.48	No
fin.	3	27	144.95	-3110			1704	635	SLU 37	0.2	No
ini.	3	-158	2112.58	-1320			1767	675	SLU 79	0.51	No
fin.	3	-158	279.66	-3323			1767	675	SLU 79	0.2	No
ini.	3	-141	2092.02	-1084			1760	671	SLU 83	0.62	No
fin.	3	-141	382.85	-3251			1760	671	SLU 83	0.21	No

Verifiche a pressoflessione delle travi in muratura in combinazioni sismiche

Sezione	γM	N	M	Mu	Comb.	c.s.	Verifica
ini.	2	-2358	5359.94	5319.53	SLV 5	0.99	No
fin.	2	-3109	-4566.9	5319.53	SLV 5	1.16	Si
ini.	2	997	-3945.08	5319.53	SLV 14	1.35	Si
fin.	2	913	5774.86	5319.53	SLV 14	0.92	No
ini.	2	-2358	5359.94	5319.53	SLV 6	0.99	No
fin.	2	-3109	-4566.9	5319.53	SLV 6	1.16	Si
ini.	2	1905	-5370.31	5319.53	SLV 15	0.99	No
fin.	2	2248	7611.08	5319.53	SLV 15	0.7	No
ini.	2	-2536	7812.25	5319.53	SLV 2	0.68	No
fin.	2	-2879	-6839.76	5319.53	SLV 2	0.78	No
ini.	2	1905	-5370.31	5319.53	SLV 16	0.99	No
fin.	2	2248	7611.08	5319.53	SLV 16	0.7	No
ini.	2	-1628	6387.03	5319.53	SLV 3	0.83	No
fin.	2	-1544	-5003.55	5319.53	SLV 3	1.06	Si
ini.	2	997	-3945.08	5319.53	SLV 13	1.35	Si
fin.	2	913	5774.86	5319.53	SLV 13	0.92	No
ini.	2	-2536	7812.25	5319.53	SLV 1	0.68	No
fin.	2	-2879	-6839.76	5319.53	SLV 1	0.78	No
ini.	2	-1628	6387.03	5319.53	SLV 4	0.83	No
fin.	2	-1544	-5003.55	5319.53	SLV 4	1.06	Si

Verifiche a taglio delle travi in muratura secondo §C8.7.1.3.1 in combinazioni sismiche

Sezione	γM	N	M	V	Vt	Vp	Vt fess. diag.	Vt,lim	Comb.	c.s.	Verifica
ini.	2	1905	-5370.31	16755			2556	358	SLV 15	0.02	No
fin.	2	2248	7611.08	15524			2556	0	SLV 15	0	No
ini.	2	1728	-2918	10367			2556	450	SLV 11	0.04	No
fin.	2	2478	5338.21	9320			2556	0	SLV 11	0	No
ini.	2	997	-3945.08	13038			2556	713	SLV 14	0.05	No
fin.	2	913	5774.86	11661			2556	737	SLV 14	0.06	No
ini.	2	-1628	6387.03	-13889			3207	1267	SLV 3	0.09	No
fin.	2	-1544	-5003.55	-15082			3173	1253	SLV 3	0.08	No
ini.	2	997	-3945.08	13038			2556	713	SLV 13	0.05	No
fin.	2	913	5774.86	11661			2556	737	SLV 13	0.06	No
ini.	2	-2536	7812.25	-17607			3570	1409	SLV 1	0.08	No
fin.	2	-2879	-6839.76	-18946			3707	1459	SLV 1	0.08	No
ini.	2	-2536	7812.25	-17607			3570	1409	SLV 2	0.08	No
fin.	2	-2879	-6839.76	-18946			3707	1459	SLV 2	0.08	No
ini.	2	1905	-5370.31	16755			2556	358	SLV 16	0.02	No
fin.	2	2248	7611.08	15524			2556	0	SLV 16	0	No
ini.	2	-1628	6387.03	-13889			3207	1267	SLV 4	0.09	No
fin.	2	-1544	-5003.55	-15082			3173	1253	SLV 4	0.08	No
ini.	2	1728	-2918	10367			2556	450	SLV 12	0.04	No
fin.	2	2478	5338.21	9320			2556	0	SLV 12	0	No

Tabella dei coefficienti di sicurezza minimi

Stato limite	Coeff.s.	Comb.	Verifica
PF_SLV	0.681	SLV 1	No
V_SLV	0	SLV 11	No
PF_SLU	1.654	SLU 77	Si
V_SLU	0.198	SLU 77	No

Trave di accoppiamento 50

Verifiche condotte secondo D.M. 17-01-18 (N.T.C.)

Dati geometrici

X ini.	Y ini.	Z ini.inf.	Z ini.sup.	H ini.	X fin.	Y fin.	Z fin.inf.	Z fin.sup	H fin.	Luce	Spessore	R. Trazione
-11.865	1.141	3.82	5	1.18	-12.865	1.141	3.82	5	1.18	1	0.28	30000

Caratteristiche del materiale

(Circolare 7 21-01-19 C8.5.I) Muratura in mattoni pieni e malta di calce LC2_Corti

fb_	fhk	fvk0	fhmedio	τ0	fv0	μ	ϕ	fvk,lim	E	G	FC
120000			172500	9000	20000	0.577	0.767	6500	320000000	128000000	1.2

Verifiche a pressoflessione delle travi in muratura in combinazioni non sismiche

Sezione	γM	N	M	Mu	Comb.	c.s.	Verifica
ini.	3	-1826	-604.75	1978.03	SLU 81	3.27	Si
fin.	3	-1826	349.63	1978.03	SLU 81	5.66	Si
ini.	3	-1799	-530.78	1978.03	SLU 83	3.73	Si
fin.	3	-1799	282.86	1978.03	SLU 83	6.99	Si
ini.	3	-1516	-513.07	1978.03	SLU 39	3.86	Si
fin.	3	-1516	286.7	1978.03	SLU 39	6.9	Si
ini.	3	-1638	-553.66	1978.03	SLU 61	3.57	Si
fin.	3	-1638	338.99	1978.03	SLU 61	5.84	Si
ini.	3	-1757	-525.57	1978.03	SLU 84	3.76	Si
fin.	3	-1757	284.98	1978.03	SLU 84	6.94	Si
ini.	3	-1559	-517.45	1978.03	SLU 52	3.82	Si
fin.	3	-1559	325.53	1978.03	SLU 52	6.08	Si
ini.	3	-1705	-563.34	1978.03	SLU 73	3.51	Si
fin.	3	-1705	338.29	1978.03	SLU 73	5.85	Si
ini.	3	-1784	-599.55	1978.03	SLU 82	3.3	Si
fin.	3	-1784	351.75	1978.03	SLU 82	5.62	Si
ini.	3	-1680	-558.87	1978.03	SLU 60	3.54	Si
fin.	3	-1680	336.87	1978.03	SLU 60	5.87	Si
ini.	3	-1722	-511.69	1978.03	SLU 74	3.87	Si
fin.	3	-1722	281.84	1978.03	SLU 74	7.02	Si

Verifiche a taglio delle travi in muratura secondo §C8.7.1.3.1 in combinazioni non sismiche

Sezione	γM	N	M	V	Vt	Vp	Vt fess. diag.	Vt,lim	Comb.	c.s.	Verifica
ini.	3	-1705	-563.34	1787			1954	764	SLU 73	0.43	No
fin.	3	-1705	338.29	16			1954	764	SLU 73	48.26	Si
ini.	3	-1680	-506.48	1676			1944	761	SLU 75	0.45	No
fin.	3	-1680	283.96	-95			1944	761	SLU 75	7.98	Si
ini.	3	-1784	-599.55	1910			1986	775	SLU 82	0.41	No
fin.	3	-1784	351.75	-8			1986	775	SLU 82	103.08	Si
ini.	3	-1475	-507.86	1651			1862	732	SLU 40	0.44	No
fin.	3	-1475	288.82	-58			1862	732	SLU 40	12.62	Si
ini.	3	-1516	-513.07	1654			1879	738	SLU 39	0.45	No
fin.	3	-1516	286.7	-55			1879	738	SLU 39	13.44	Si
ini.	3	-1826	-604.75	1913			2003	781	SLU 81	0.41	No
fin.	3	-1826	349.63	-4			2003	781	SLU 81	176.13	Si
ini.	3	-1757	-525.57	1769			1975	771	SLU 84	0.44	No
fin.	3	-1757	284.98	-148			1975	771	SLU 84	5.2	Si
ini.	3	-1638	-553.66	1728			1928	755	SLU 61	0.44	No
fin.	3	-1638	338.99	57			1928	755	SLU 61	13.21	Si
ini.	3	-1680	-558.87	1731			1944	761	SLU 60	0.44	No
fin.	3	-1680	336.87	60			1944	761	SLU 60	12.63	Si
ini.	3	-1799	-530.78	1772			1992	777	SLU 83	0.44	No
fin.	3	-1799	282.86	-145			1992	777	SLU 83	5.35	Si

Verifiche a pressoflessione delle travi in muratura in combinazioni sismiche

Sezione	γM	N	M	Mu	Comb.	c.s.	Verifica
ini.	2	-1583	-7639.14	2967.04	SLV 14	0.39	No
fin.	2	-1476	7507.12	2967.04	SLV 14	0.4	No
ini.	2	-558	-3328.16	2967.04	SLV 12	0.89	No
fin.	2	-423	3078.72	2967.04	SLV 12	0.96	No
ini.	2	-1583	-7639.14	2967.04	SLV 13	0.39	No
fin.	2	-1476	7507.12	2967.04	SLV 13	0.4	No
ini.	2	-966	6853.15	2967.04	SLV 3	0.43	No
fin.	2	-1074	-7031.29	2967.04	SLV 3	0.42	No
ini.	2	-1138	-8058.22	2967.04	SLV 15	0.37	No
fin.	2	-973	7870.45	2967.04	SLV 15	0.38	No
ini.	2	-1138	-8058.22	2967.04	SLV 16	0.37	No
fin.	2	-973	7870.45	2967.04	SLV 16	0.38	No
ini.	2	-1412	7272.22	2967.04	SLV 1	0.41	No
fin.	2	-1576	-7394.61	2967.04	SLV 1	0.4	No
ini.	2	-558	-3328.16	2967.04	SLV 11	0.89	No
fin.	2	-423	3078.72	2967.04	SLV 11	0.96	No
ini.	2	-966	6853.15	2967.04	SLV 4	0.43	No
fin.	2	-1074	-7031.29	2967.04	SLV 4	0.42	No
ini.	2	-1412	7272.22	2967.04	SLV 2	0.41	No
fin.	2	-1576	-7394.61	2967.04	SLV 2	0.4	No

Verifiche a taglio delle travi in muratura secondo §C8.7.1.3.1 in combinazioni sismiche

Sezione	γM	N	M	V	Vt	Vp	Vt fess. diag.	Vt,lim	Comb.	c.s.	Verifica
ini.	2	-558	-3328.16	6808			2132	831	SLV 11	0.12	No
fin.	2	-423	3078.72	5333			2078	805	SLV 11	0.15	No
ini.	2	-1412	7272.22	-14093			2473	978	SLV 2	0.07	No
fin.	2	-1576	-7394.61	-15131			2539	1004	SLV 2	0.07	No
ini.	2	-966	6853.15	-13423			2295	904	SLV 3	0.07	No
fin.	2	-1074	-7031.29	-14658			2338	923	SLV 3	0.06	No
ini.	2	-1583	-7639.14	15829			2542	1005	SLV 13	0.06	No
fin.	2	-1476	7507.12	14776			2499	988	SLV 13	0.07	No
ini.	2	-1138	-8058.22	16499			2364	933	SLV 16	0.06	No

Sezione	γM	N	M	V	Vt	Vp	Vt fess. diag.	Vt,lim	Comb.	c.s.	Verifica
fin.	2	-973	7870.45	15249			2298	905	SLV 16	0.06	No
ini.	2	-558	-3328.16	6808			2132	831	SLV 12	0.12	No
fin.	2	-423	3078.72	5333			2078	805	SLV 12	0.15	No
ini.	2	-1583	-7639.14	15829			2542	1005	SLV 14	0.06	No
fin.	2	-1476	7507.12	14776			2499	988	SLV 14	0.07	No
ini.	2	-966	6853.15	-13423			2295	904	SLV 4	0.07	No
fin.	2	-1074	-7031.29	-14658			2338	923	SLV 4	0.06	No
ini.	2	-1138	-8058.22	16499			2364	933	SLV 15	0.06	No
fin.	2	-973	7870.45	15249			2298	905	SLV 15	0.06	No
ini.	2	-1412	7272.22	-14093			2473	978	SLV 1	0.07	No
fin.	2	-1576	-7394.61	-15131			2539	1004	SLV 1	0.07	No

Tabella dei coefficienti di sicurezza minimi

Stato limite	Coeff.s.	Comb.	Verifica
PF_SLV	0.368	SLV 15	No
V_SLV	0.057	SLV 15	No
PF_SLU	3.271	SLU 81	Si
V_SLU	0.406	SLU 82	No

Trave di accoppiamento 51

Verifiche condotte secondo D.M. 17-01-18 (N.T.C.)

Dati geometrici

X ini.	Y ini.	Z ini.inf.	Z ini.sup.	H ini.	X fin.	Y fin.	Z fin.inf.	Z fin.sup	H fin.	Luce	Spessore	R. Trazione
-4.13	1.141	3.42	5	1.58	-4.93	1.141	3.42	5	1.58	0.8	0.28	30000

Caratteristiche del materiale

(Circolare 7 21-01-19 C8.5.I) Muratura in mattoni pieni e malta di calce LC2_Corti

fb_	fhk	fvk0	fhmedio	τ0	fv0	μ	ϕ	fvk,lim	E	G	FC
120000			172500	9000	20000	0.577	0.767	6500	320000000	128000000	1.2

Verifiche a pressoflessione delle travi in muratura in combinazioni non sismiche

Sezione	γM	N	M	Mu	Comb.	c.s.	Verifica
ini.	3	-511	2945.15	3546.36	SLU 76	1.2	Si
fin.	3	-511	-745.21	3546.36	SLU 76	4.76	Si
ini.	3	-537	3021.11	3546.36	SLU 82	1.17	Si
fin.	3	-537	-729.74	3546.36	SLU 82	4.86	Si
ini.	3	-404	2976.42	3546.36	SLU 83	1.19	Si
fin.	3	-404	-648.31	3546.36	SLU 83	5.47	Si
ini.	3	-443	3028.87	3546.36	SLU 84	1.17	Si
fin.	3	-443	-710.66	3546.36	SLU 84	4.99	Si
ini.	3	-352	2865.5	3546.36	SLU 79	1.24	Si
fin.	3	-352	-622.21	3546.36	SLU 79	5.7	Si
ini.	3	-605	2937.39	3546.36	SLU 73	1.21	Si
fin.	3	-605	-764.29	3546.36	SLU 73	4.64	Si
ini.	3	-391	2917.94	3546.36	SLU 80	1.22	Si
fin.	3	-391	-684.56	3546.36	SLU 80	5.18	Si
ini.	3	-497	2968.67	3546.36	SLU 81	1.19	Si
fin.	3	-497	-667.39	3546.36	SLU 81	5.31	Si
ini.	3	-467	2908.53	3546.36	SLU 75	1.22	Si
fin.	3	-467	-687.86	3546.36	SLU 75	5.16	Si
ini.	3	-373	2916.29	3546.36	SLU 78	1.22	Si
fin.	3	-373	-668.78	3546.36	SLU 78	5.3	Si

Verifiche a taglio delle travi in muratura secondo §C8.7.1.3.1 in combinazioni non sismiche

Sezione	γM	N	M	V	Vt	Vp	Vt fess. diag.	Vt,lim	Comb.	c.s.	Verifica
ini.	3	-537	3021.11	-3575			1919	749	SLU 82	0.21	No
fin.	3	-537	-729.74	-5741			1919	749	SLU 82	0.13	No
ini.	3	-497	2968.67	-3431			1903	741	SLU 81	0.22	No
fin.	3	-497	-667.39	-5597			1903	741	SLU 81	0.13	No
ini.	3	-334	2863.84	-3306			1837	710	SLU 77	0.21	No
fin.	3	-334	-606.43	-5308			1837	710	SLU 77	0.13	No
ini.	3	-511	2945.15	-3581			1908	744	SLU 76	0.21	No
fin.	3	-511	-745.21	-5583			1908	744	SLU 76	0.13	No
ini.	3	-373	2916.29	-3450			1853	718	SLU 78	0.21	No
fin.	3	-373	-668.78	-5451			1853	718	SLU 78	0.13	No
ini.	3	-404	2976.42	-3417			1865	724	SLU 83	0.21	No
fin.	3	-404	-648.31	-5583			1865	724	SLU 83	0.13	No
ini.	3	-467	2908.53	-3464			1891	736	SLU 75	0.21	No
fin.	3	-467	-687.86	-5466			1891	736	SLU 75	0.13	No
ini.	3	-352	2865.5	-3328			1844	714	SLU 79	0.21	No
fin.	3	-352	-622.21	-5330			1844	714	SLU 79	0.13	No
ini.	3	-443	3028.87	-3561			1881	731	SLU 84	0.21	No
fin.	3	-443	-710.66	-5727			1881	731	SLU 84	0.13	No
ini.	3	-391	2917.94	-3471			1860	721	SLU 80	0.21	No
fin.	3	-391	-684.56	-5473			1860	721	SLU 80	0.13	No

Verifiche a pressoflessione delle travi in muratura in combinazioni sismiche

Sezione	γM	N	M	Mu	Comb.	c.s.	Verifica
ini.	2	-3356	-5155.53	5319.53	SLV 14	1.03	Si
fin.	2	-2998	6217.64	5319.53	SLV 14	0.86	No
ini.	2	684	7346.58	5319.53	SLV 2	0.72	No
fin.	2	760	-5893.17	5319.53	SLV 2	0.9	No
ini.	2	2920	6910.9	5319.53	SLV 8	0.77	No
fin.	2	2156	-4528.99	5319.53	SLV 8	1.17	Si

Sezione	γM	N	M	Mu	Comb.	c.s.	Verifica
ini.	2	684	7346.58	5319.53	SLV 1	0.72	No
fin.	2	760	-5893.17	5319.53	SLV 1	0.9	No
ini.	2	2369	9165.07	5319.53	SLV 4	0.58	No
fin.	2	2011	-7219.91	5319.53	SLV 4	0.74	No
ini.	2	2920	6910.9	5319.53	SLV 7	0.77	No
fin.	2	2156	-4528.99	5319.53	SLV 7	1.17	Si
ini.	2	-3356	-5155.53	5319.53	SLV 13	1.03	Si
fin.	2	-2998	6217.64	5319.53	SLV 13	0.86	No
ini.	2	-1671	-3337.04	5319.53	SLV 16	1.59	Si
fin.	2	-1747	4890.9	5319.53	SLV 16	1.09	Si
ini.	2	-1671	-3337.04	5319.53	SLV 15	1.59	Si
fin.	2	-1747	4890.9	5319.53	SLV 15	1.09	Si
ini.	2	2369	9165.07	5319.53	SLV 3	0.58	No
fin.	2	2011	-7219.91	5319.53	SLV 3	0.74	No

Verifiche a taglio delle travi in muratura secondo §C8.7.1.3.1 in combinazioni sismiche

Sezione	γM	N	M	V	Vt	Vp	Vt fess. diag.	Vt,lim	Comb.	c.s.	Verifica
ini.	2	684	7346.58	-16055			2556	799	SLV 1	0.05	No
fin.	2	760	-5893.17	-17456			2556	779	SLV 1	0.04	No
ini.	2	1708	3160.27	-4080			2556	459	SLV 11	0.11	No
fin.	2	1028	-895.75	-4966			2556	704	SLV 11	0.14	No
ini.	2	2369	9165.07	-19807			2556	0	SLV 4	0	No
fin.	2	2011	-7219.91	-20969			2556	290	SLV 4	0.01	No
ini.	2	-3356	-5155.53	14875			3898	1526	SLV 13	0.1	No
fin.	2	-2998	6217.64	13468			3755	1476	SLV 13	0.11	No
ini.	2	2920	6910.9	-13359			2556	0	SLV 8	0	No
fin.	2	2156	-4528.99	-14244			2556	153	SLV 8	0.01	No
ini.	2	2369	9165.07	-19807			2556	0	SLV 3	0	No
fin.	2	2011	-7219.91	-20969			2556	290	SLV 3	0.01	No
ini.	2	-3356	-5155.53	14875			3898	1526	SLV 14	0.1	No
fin.	2	-2998	6217.64	13468			3755	1476	SLV 14	0.11	No
ini.	2	684	7346.58	-16055			2556	799	SLV 2	0.05	No
fin.	2	760	-5893.17	-17456			2556	779	SLV 2	0.04	No
ini.	2	2920	6910.9	-13359			2556	0	SLV 7	0	No
fin.	2	2156	-4528.99	-14244			2556	153	SLV 7	0.01	No
ini.	2	1708	3160.27	-4080			2556	459	SLV 12	0.11	No
fin.	2	1028	-895.75	-4966			2556	704	SLV 12	0.14	No

Tabella dei coefficienti di sicurezza minimi

Stato limite	Coeff.s.	Comb.	Verifica
PF_SLV	0.58	SLV 3	No
V_SLV	0	SLV 3	No
PF_SLU	1.171	SLU 84	Si
V_SLU	0.128	SLU 84	No

Trave di accoppiamento 52

Verifiche condotte secondo D.M. 17-01-18 (N.T.C.)

Dati geometrici

X ini.	Y ini.	Z ini.inf.	Z ini.sup.	H ini.	X fin.	Y fin.	Z fin.inf.	Z fin.sup	H fin.	Luce	Spessore	R. Trazione
-9.94	3.3	3.22	5	1.78	-10.74	3.3	3.22	5	1.78	0.8	0.14	30000

Caratteristiche del materiale

(Circolare 7 21-01-19 C8.5.I) Muratura in mattoni pieni e malta di calce LC2_Corti

fb_	fhk	fvk0	fhmedio	τ0	fv0	μ	ϕ	fvk,lim	E	G	FC
120000			172500	9000	20000	0.577	0.767	6500	320000000	128000000	1.2

Verifiche a pressoflessione delle travi in muratura in combinazioni non sismiche

Sezione	γM	N	M	Mu	Comb.	c.s.	Verifica
ini.	3	48	96.08	2250.5	SLU 72	23.42	Si
fin.	3	48	-1509.38	2250.5	SLU 72	1.49	Si
ini.	3	48	95.98	2250.5	SLU 71	23.45	Si
fin.	3	48	-1512.53	2250.5	SLU 71	1.49	Si
ini.	3	36	54.99	2250.5	SLU 49	40.92	Si
fin.	3	36	-1536.7	2250.5	SLU 49	1.46	Si
ini.	3	49	95.63	2250.5	SLU 69	23.53	Si
fin.	3	49	-1519.53	2250.5	SLU 69	1.48	Si
ini.	3	35	55.24	2250.5	SLU 50	40.74	Si
fin.	3	35	-1532.84	2250.5	SLU 50	1.47	Si
ini.	3	37	57.38	2250.5	SLU 46	39.22	Si
fin.	3	37	-1468.02	2250.5	SLU 46	1.53	Si
ini.	3	35	55.34	2250.5	SLU 51	40.66	Si
fin.	3	35	-1529.7	2250.5	SLU 51	1.47	Si
ini.	3	49	95.73	2250.5	SLU 70	23.51	Si
fin.	3	49	-1516.39	2250.5	SLU 70	1.48	Si
ini.	3	37	57.27	2250.5	SLU 45	39.29	Si
fin.	3	37	-1471.16	2250.5	SLU 45	1.53	Si
ini.	3	36	54.89	2250.5	SLU 48	41	Si
fin.	3	36	-1539.84	2250.5	SLU 48	1.46	Si

Verifiche a taglio delle travi in muratura secondo §C8.7.1.3.1 in combinazioni non sismiche

Sezione	γM	N	M	V	Vt	Vp	Vt fess. diag.	Vt,lim	Comb.	c.s.	Verifica
ini.	3	64	153.02	-1356			960	347	SLU 79	0.26	No
fin.	3	64	-1376.78	-2507			960	347	SLU 79	0.14	No
ini.	3	49	95.63	-1578			960	350	SLU 69	0.22	No

Sezione	γM	N	M	V	Vt	Vp	Vt fess. diag.	Vt,lim	Comb.	c.s.	Verifica
fin.	3	49	-1519.53	-2498			960	350	SLU 69	0.14	No
ini.	3	64	153.12	-1352			960	347	SLU 80	0.26	No
fin.	3	64	-1373.63	-2503			960	347	SLU 80	0.14	No
ini.	3	66	152.77	-1360			960	347	SLU 78	0.25	No
fin.	3	66	-1380.64	-2511			960	347	SLU 78	0.14	No
ini.	3	48	96.08	-1566			960	351	SLU 72	0.22	No
fin.	3	48	-1509.38	-2486			960	351	SLU 72	0.14	No
ini.	3	66	152.67	-1364			960	347	SLU 77	0.25	No
fin.	3	66	-1383.78	-2515			960	347	SLU 77	0.14	No
ini.	3	48	95.98	-1570			960	351	SLU 71	0.22	No
fin.	3	48	-1512.53	-2490			960	351	SLU 71	0.14	No
ini.	3	72	179.85	-1181			960	345	SLU 83	0.29	No
fin.	3	72	-1249.91	-2431			960	345	SLU 83	0.14	No
ini.	3	49	95.73	-1574			960	350	SLU 70	0.22	No
fin.	3	49	-1516.39	-2494			960	350	SLU 70	0.14	No
ini.	3	72	179.96	-1178			960	345	SLU 84	0.29	No
fin.	3	72	-1246.77	-2427			960	345	SLU 84	0.14	No

Verifiche a pressoflessione delle travi in muratura in combinazioni sismiche

Sezione	γM	N	M	Mu	Comb.	c.s.	Verifica
ini.	2	19	-184.6	3375.74	SLV 6	18.29	Si
fin.	2	-67	-3744.59	3375.74	SLV 6	0.9	No
ini.	2	441	387.79	3375.74	SLV 13	8.71	Si
fin.	2	381	4026.86	3375.74	SLV 13	0.84	No
ini.	2	-361	-218.11	3375.74	SLV 3	15.48	Si
fin.	2	-300	-6073.85	3375.74	SLV 3	0.56	No
ini.	2	-307	-316.4	3375.74	SLV 1	10.67	Si
fin.	2	-303	-6737.7	3375.74	SLV 1	0.5	No
ini.	2	387	486.08	3375.74	SLV 15	6.94	Si
fin.	2	383	4690.7	3375.74	SLV 15	0.72	No
ini.	2	19	-184.6	3375.74	SLV 5	18.29	Si
fin.	2	-67	-3744.59	3375.74	SLV 5	0.9	No
ini.	2	441	387.79	3375.74	SLV 14	8.71	Si
fin.	2	381	4026.86	3375.74	SLV 14	0.84	No
ini.	2	-361	-218.11	3375.74	SLV 4	15.48	Si
fin.	2	-300	-6073.85	3375.74	SLV 4	0.56	No
ini.	2	-307	-316.4	3375.74	SLV 2	10.67	Si
fin.	2	-303	-6737.7	3375.74	SLV 2	0.5	No
ini.	2	387	486.08	3375.74	SLV 16	6.94	Si
fin.	2	383	4690.7	3375.74	SLV 16	0.72	No

Verifiche a taglio delle travi in muratura secondo §C8.7.1.3.1 in combinazioni sismiche

Sezione	γM	N	M	V	Vt	Vp	Vt fess. diag.	Vt,lim	Comb.	c.s.	Verifica
ini.	2	441	387.79	4921			1440	435	SLV 13	0.09	No
fin.	2	381	4026.86	4244			1440	451	SLV 13	0.11	No
ini.	2	19	-184.6	-4247			1440	538	SLV 5	0.13	No
fin.	2	-67	-3744.59	-4915			1466	556	SLV 5	0.11	No
ini.	2	387	486.08	5706			1440	450	SLV 15	0.08	No
fin.	2	383	4690.7	4985			1440	451	SLV 15	0.09	No
ini.	2	-361	-218.11	-6988			1584	615	SLV 4	0.09	No
fin.	2	-300	-6073.85	-7778			1560	604	SLV 4	0.08	No
ini.	2	-307	-316.4	-7773			1562	605	SLV 2	0.08	No
fin.	2	-303	-6737.7	-8518			1561	604	SLV 2	0.07	No
ini.	2	387	486.08	5706			1440	450	SLV 16	0.08	No
fin.	2	383	4690.7	4985			1440	451	SLV 16	0.09	No
ini.	2	19	-184.6	-4247			1440	538	SLV 6	0.13	No
fin.	2	-67	-3744.59	-4915			1466	556	SLV 6	0.11	No
ini.	2	-361	-218.11	-6988			1584	615	SLV 3	0.09	No
fin.	2	-300	-6073.85	-7778			1560	604	SLV 3	0.08	No
ini.	2	-307	-316.4	-7773			1562	605	SLV 1	0.08	No
fin.	2	-303	-6737.7	-8518			1561	604	SLV 1	0.07	No
ini.	2	441	387.79	4921			1440	435	SLV 14	0.09	No
fin.	2	381	4026.86	4244			1440	451	SLV 14	0.11	No

Tabella dei coefficienti di sicurezza minimi

Stato limite	Coeff.s.	Comb.	Verifica
PF_SLV	0.501	SLV 1	No
V_SLV	0.071	SLV 1	No
PF_SLU	1.462	SLU 48	Si
V_SLU	0.138	SLU 77	No

Trave di accoppiamento 53

Verifiche condotte secondo D.M. 17-01-18 (N.T.C.)

Dati geometrici

X ini.	Y ini.	Z ini.inf.	Z ini.sup.	H ini.	X fin.	Y fin.	Z fin.inf.	Z fin.sup	H fin.	Luce	Spessore	R. Trazione
-11.003	0	3.42	5	1.58	-11.003	1	3.42	5	1.58	1	0.28	30000

Caratteristiche del materiale

(Circolare 7 21-01-19 C8.5.I) Muratura in mattoni pieni e malta di calce LC2_Corti

fb_	fhk	fvk0	fhmedio	τ0	fv0	μ	ϕ	fvk,lim	E	G	FC
120000			172500	9000	20000	0.577	0.767	6500	320000000	128000000	1.2

Verifiche a pressoflessione delle travi in muratura in combinazioni non sismiche

Sezione	γM	N	M	Mu	Comb.	c.s.	Verifica

Sezione	γM	N	M	Mu	Comb.	c.s.	Verifica
ini.	3	19	-7849.26	3546.36	SLU 83	0.45	No
fin.	3	19	-762.45	3546.36	SLU 83	4.65	Si
ini.	3	21	-7773.7	3546.36	SLU 77	0.46	No
fin.	3	21	-755.06	3546.36	SLU 77	4.7	Si
ini.	3	20	-7454.26	3546.36	SLU 84	0.48	No
fin.	3	20	-715.93	3546.36	SLU 84	4.95	Si
ini.	3	21	-7378.7	3546.36	SLU 78	0.48	No
fin.	3	21	-708.54	3546.36	SLU 78	5.01	Si
ini.	3	21	-7323.96	3546.36	SLU 80	0.48	No
fin.	3	21	-702.92	3546.36	SLU 80	5.05	Si
ini.	3	21	-7158.03	3546.36	SLU 75	0.5	No
fin.	3	21	-684.7	3546.36	SLU 75	5.18	Si
ini.	3	20	-7233.6	3546.36	SLU 82	0.49	No
fin.	3	20	-692.09	3546.36	SLU 82	5.12	Si
ini.	3	20	-7553.04	3546.36	SLU 74	0.47	No
fin.	3	20	-731.22	3546.36	SLU 74	4.85	Si
ini.	3	20	-7718.96	3546.36	SLU 79	0.46	No
fin.	3	20	-749.45	3546.36	SLU 79	4.73	Si
ini.	3	19	-7628.6	3546.36	SLU 81	0.46	No
fin.	3	19	-738.61	3546.36	SLU 81	4.8	Si

Verifiche a taglio delle travi in muratura secondo §C8.7.1.3.1 in combinazioni non sismiche

Sezione	γM	N	M	V	Vt	Vp	Vt fess. diag.	Vt,lim	Comb.	c.s.	Verifica
ini.	3	21	-7378.7	7209			1704	637	SLU 78	0.09	No
fin.	3	21	-708.54	6153			1704	637	SLU 78	0.1	No
ini.	3	20	-7718.96	7509			1704	637	SLU 79	0.08	No
fin.	3	20	-749.45	6452			1704	637	SLU 79	0.1	No
ini.	3	21	-7773.7	7558			1704	637	SLU 77	0.08	No
fin.	3	21	-755.06	6502			1704	637	SLU 77	0.1	No
ini.	3	21	-7158.03	7012			1704	637	SLU 75	0.09	No
fin.	3	21	-684.7	5956			1704	637	SLU 75	0.11	No
ini.	3	20	-7454.26	7277			1704	637	SLU 84	0.09	No
fin.	3	20	-715.93	6221			1704	637	SLU 84	0.1	No
ini.	3	20	-7233.6	7081			1704	637	SLU 82	0.09	No
fin.	3	20	-692.09	6024			1704	637	SLU 82	0.11	No
ini.	3	20	-7553.04	7361			1704	637	SLU 74	0.09	No
fin.	3	20	-731.22	6305			1704	637	SLU 74	0.1	No
ini.	3	19	-7849.26	7626			1704	637	SLU 83	0.08	No
fin.	3	19	-762.45	6570			1704	637	SLU 83	0.1	No
ini.	3	19	-7628.6	7429			1704	637	SLU 81	0.09	No
fin.	3	19	-738.61	6373			1704	637	SLU 81	0.1	No
ini.	3	21	-7323.96	7160			1704	637	SLU 80	0.09	No
fin.	3	21	-702.92	6104			1704	637	SLU 80	0.1	No

Verifiche a pressoflessione delle travi in muratura in combinazioni sismiche

Sezione	γM	N	M	Mu	Comb.	c.s.	Verifica
ini.	2	-406	-12310.92	5319.53	SLV 10	0.43	No
fin.	2	-1151	-1099.72	5319.53	SLV 10	4.84	Si
ini.	2	-443	-13853.18	5319.53	SLV 5	0.38	No
fin.	2	-1046	-1277.6	5319.53	SLV 5	4.16	Si
ini.	2	-406	-12310.92	5319.53	SLV 9	0.43	No
fin.	2	-1151	-1099.72	5319.53	SLV 9	4.84	Si
ini.	2	-55	-4846.93	5319.53	SLV 14	1.1	Si
fin.	2	-493	-392.94	5319.53	SLV 14	13.54	Si
ini.	2	-443	-13853.18	5319.53	SLV 6	0.38	No
fin.	2	-1046	-1277.6	5319.53	SLV 6	4.16	Si
ini.	2	-178	-9987.79	5319.53	SLV 1	0.53	No
fin.	2	-143	-985.88	5319.53	SLV 1	5.4	Si
ini.	2	-55	-4846.93	5319.53	SLV 13	1.1	Si
fin.	2	-493	-392.94	5319.53	SLV 13	13.54	Si
ini.	2	-178	-9987.79	5319.53	SLV 2	0.53	No
fin.	2	-143	-985.88	5319.53	SLV 2	5.4	Si
ini.	2	87	-5132.34	5319.53	SLV 3	1.04	Si
fin.	2	526	-557.95	5319.53	SLV 3	9.53	Si
ini.	2	87	-5132.34	5319.53	SLV 4	1.04	Si
fin.	2	526	-557.95	5319.53	SLV 4	9.53	Si

Verifiche a taglio delle travi in muratura secondo §C8.7.1.3.1 in combinazioni sismiche

Sezione	γM	N	M	V	Vt	Vp	Vt fess. diag.	Vt,lim	Comb.	c.s.	Verifica
ini.	2	-178	-9987.79	8746			2627	1000	SLV 1	0.11	No
fin.	2	-143	-985.88	8550			2613	992	SLV 1	0.12	No
ini.	2	475	3873.9	-3303			2556	852	SLV 11	0.26	No
fin.	2	1078	326.71	-3836			2556	689	SLV 11	0.18	No
ini.	2	-178	-9987.79	8746			2627	1000	SLV 2	0.11	No
fin.	2	-143	-985.88	8550			2613	992	SLV 2	0.12	No
ini.	2	-406	-12310.92	12272			2718	1046	SLV 9	0.09	No
fin.	2	-1151	-1099.72	10718			3016	1186	SLV 9	0.11	No
ini.	2	-443	-13853.18	13161			2733	1054	SLV 6	0.08	No
fin.	2	-1046	-1277.6	12069			2974	1167	SLV 6	0.1	No
ini.	2	475	3873.9	-3303			2556	852	SLV 12	0.26	No
fin.	2	1078	326.71	-3836			2556	689	SLV 12	0.18	No
ini.	2	-443	-13853.18	13161			2733	1054	SLV 5	0.08	No
fin.	2	-1046	-1277.6	12069			2974	1167	SLV 5	0.1	No
ini.	2	-406	-12310.92	12272			2718	1046	SLV 10	0.09	No
fin.	2	-1151	-1099.72	10718			3016	1186	SLV 10	0.11	No
ini.	2	-55	-4846.93	5784			2578	974	SLV 14	0.17	No
fin.	2	-493	-392.94	4049			2753	1064	SLV 14	0.26	No
ini.	2	-55	-4846.93	5784			2578	974	SLV 13	0.17	No
fin.	2	-493	-392.94	4049			2753	1064	SLV 13	0.26	No

Tabella dei coefficienti di sicurezza minimi

Stato limite	Coeff.s.	Comb.	Verifica
PF_SLV	0.384	SLV 5	No
V_SLV	0.08	SLV 5	No
PF_SLU	0.452	SLU 83	No
V_SLU	0.084	SLU 83	No

Trave di accoppiamento 54

Verifiche condotte secondo D.M. 17-01-18 (N.T.C.)

Dati geometrici

X ini.	Y ini.	Z ini.inf.	Z ini.sup.	H ini.	X fin.	Y fin.	Z fin.inf.	Z fin.sup	H fin.	Luce	Spessore	R. Trazione
-9.72	1.426	3.42	5	1.58	-9.72	2.226	3.42	5	1.58	0.8	0.14	30000

Caratteristiche del materiale

(Circolare 7 21-01-19 C8.5.I) Muratura in mattoni pieni e malta di calce LC2_Corti

fb_	fhk	fvk0	fhmedio	τ0	fv0	μ	ϕ	fvk,lim	E	G	FC
120000			172500	9000	20000	0.577	0.767	6500	320000000	128000000	1.2

Verifiche a pressoflessione delle travi in muratura in combinazioni non sismiche

Sezione	γM	N	M	Mu	Comb.	c.s.	Verifica
ini.	3	-355	-569.84	1773.18	SLU 75	3.11	Si
fin.	3	-355	-6199.46	1773.18	SLU 75	0.29	No
ini.	3	-371	-592.92	1773.18	SLU 84	2.99	Si
fin.	3	-371	-6458.89	1773.18	SLU 84	0.27	No
ini.	3	-373	-592.93	1773.18	SLU 83	2.99	Si
fin.	3	-373	-6466.86	1773.18	SLU 83	0.27	No
ini.	3	-361	-581.55	1773.18	SLU 82	3.05	Si
fin.	3	-361	-6321.29	1773.18	SLU 82	0.28	No
ini.	3	-364	-575.38	1773.18	SLU 79	3.08	Si
fin.	3	-364	-6302.9	1773.18	SLU 79	0.28	No
ini.	3	-365	-581.21	1773.18	SLU 78	3.05	Si
fin.	3	-365	-6337.05	1773.18	SLU 78	0.28	No
ini.	3	-363	-581.55	1773.18	SLU 81	3.05	Si
fin.	3	-363	-6329.26	1773.18	SLU 81	0.28	No
ini.	3	-362	-575.37	1773.18	SLU 80	3.08	Si
fin.	3	-362	-6294.92	1773.18	SLU 80	0.28	No
ini.	3	-357	-569.85	1773.18	SLU 74	3.11	Si
fin.	3	-357	-6207.43	1773.18	SLU 74	0.29	No
ini.	3	-367	-581.22	1773.18	SLU 77	3.05	Si
fin.	3	-367	-6345.03	1773.18	SLU 77	0.28	No

Verifiche a taglio delle travi in muratura secondo §C8.7.1.3.1 in combinazioni non sismiche

Sezione	γM	N	M	V	Vt	Vp	Vt fess. diag.	Vt,lim	Comb.	c.s.	Verifica
ini.	3	-362	-575.37	-6936			997	391	SLU 80	0.06	No
fin.	3	-362	-6294.92	-7410			997	391	SLU 80	0.05	No
ini.	3	-373	-592.93	-7129			1001	393	SLU 83	0.06	No
fin.	3	-373	-6466.86	-7603			1001	393	SLU 83	0.05	No
ini.	3	-357	-569.85	-6833			995	391	SLU 74	0.06	No
fin.	3	-357	-6207.43	-7308			995	391	SLU 74	0.05	No
ini.	3	-364	-575.38	-6946			998	392	SLU 79	0.06	No
fin.	3	-364	-6302.9	-7420			998	392	SLU 79	0.05	No
ini.	3	-361	-581.55	-6961			996	391	SLU 82	0.06	No
fin.	3	-361	-6321.29	-7435			996	391	SLU 82	0.05	No
ini.	3	-371	-592.92	-7119			1000	393	SLU 84	0.06	No
fin.	3	-371	-6458.89	-7593			1000	393	SLU 84	0.05	No
ini.	3	-355	-569.84	-6823			994	390	SLU 75	0.06	No
fin.	3	-355	-6199.46	-7298			994	390	SLU 75	0.05	No
ini.	3	-367	-581.22	-6991			999	392	SLU 77	0.06	No
fin.	3	-367	-6345.03	-7465			999	392	SLU 77	0.05	No
ini.	3	-363	-581.55	-6971			997	392	SLU 81	0.06	No
fin.	3	-363	-6329.26	-7445			997	392	SLU 81	0.05	No
ini.	3	-365	-581.21	-6981			998	392	SLU 78	0.06	No
fin.	3	-365	-6337.05	-7455			998	392	SLU 78	0.05	No

Verifiche a pressoflessione delle travi in muratura in combinazioni sismiche

Sezione	γM	N	M	Mu	Comb.	c.s.	Verifica
ini.	2	-766	386.17	2659.77	SLV 12	6.89	Si
fin.	2	-1146	-9717.61	2659.77	SLV 12	0.27	No
ini.	2	-15	-524.95	2659.77	SLV 2	5.07	Si
fin.	2	-41	-4223.9	2659.77	SLV 2	0.63	No
ini.	2	-725	440.74	2659.77	SLV 8	6.03	Si
fin.	2	-1198	-10865.19	2659.77	SLV 8	0.24	No
ini.	2	-15	-524.95	2659.77	SLV 1	5.07	Si
fin.	2	-41	-4223.9	2659.77	SLV 1	0.63	No
ini.	2	-456	-231.77	2659.77	SLV 15	11.48	Si
fin.	2	-431	-4081.77	2659.77	SLV 15	0.65	No
ini.	2	-321	-49.86	2659.77	SLV 4	53.34	Si
fin.	2	-603	-7907.04	2659.77	SLV 4	0.34	No
ini.	2	-725	440.74	2659.77	SLV 7	6.03	Si
fin.	2	-1198	-10865.19	2659.77	SLV 7	0.24	No
ini.	2	-321	-49.86	2659.77	SLV 3	53.34	Si
fin.	2	-603	-7907.04	2659.77	SLV 3	0.34	No
ini.	2	-456	-231.77	2659.77	SLV 16	11.48	Si
fin.	2	-431	-4081.77	2659.77	SLV 16	0.65	No
ini.	2	-766	386.17	2659.77	SLV 11	6.89	Si

Sezione	γM	N	M	Mu	Comb.	c.s.	Verifica
fin.	2	-1146	-9717.61	2659.77	SLV 11	0.27	No

Verifiche a taglio delle travi in muratura secondo §C8.7.1.3.1 in combinazioni sismiche

Sezione	γM	N	M	V	Vt	Vp	Vt fess. diag.	Vt,lim	Comb.	c.s.	Verifica
ini.	2	254	-1197.46	4645			1278	422	SLV 10	0.09	No
fin.	2	727	2559.53	4269			1278	282	SLV 10	0.07	No
ini.	2	-766	386.17	-12333			1584	626	SLV 12	0.05	No
fin.	2	-1146	-9717.61	-12662			1736	686	SLV 12	0.05	No
ini.	2	-15	-524.95	-4383			1284	484	SLV 1	0.11	No
fin.	2	-41	-4223.9	-4777			1294	490	SLV 1	0.1	No
ini.	2	-725	440.74	-13758			1568	619	SLV 7	0.04	No
fin.	2	-1198	-10865.19	-14103			1757	694	SLV 7	0.05	No
ini.	2	254	-1197.46	4645			1278	422	SLV 9	0.09	No
fin.	2	727	2559.53	4269			1278	282	SLV 9	0.07	No
ini.	2	-321	-49.86	-9477			1406	546	SLV 3	0.06	No
fin.	2	-603	-7907.04	-9857			1519	598	SLV 3	0.06	No
ini.	2	-15	-524.95	-4383			1284	484	SLV 2	0.11	No
fin.	2	-41	-4223.9	-4777			1294	490	SLV 2	0.1	No
ini.	2	-321	-49.86	-9477			1406	546	SLV 4	0.06	No
fin.	2	-603	-7907.04	-9857			1519	598	SLV 4	0.06	No
ini.	2	-766	386.17	-12333			1584	626	SLV 11	0.05	No
fin.	2	-1146	-9717.61	-12662			1736	686	SLV 11	0.05	No
ini.	2	-725	440.74	-13758			1568	619	SLV 8	0.04	No
fin.	2	-1198	-10865.19	-14103			1757	694	SLV 8	0.05	No

Tabella dei coefficienti di sicurezza minimi

Stato limite	Coeff.s.	Comb.	Verifica
PF_SLV	0.245	SLV 7	No
V_SLV	0.045	SLV 7	No
PF_SLU	0.274	SLU 83	No
V_SLU	0.052	SLU 83	No

Trave di accoppiamento 55

Verifiche condotte secondo D.M. 17-01-18 (N.T.C.)

Dati geometrici

X ini.	Y ini.	Z ini.inf.	Z ini.sup.	H ini.	X fin.	Y fin.	Z fin.inf.	Z fin.sup	H fin.	Luce	Spessore	R. Trazione
-9.867	-4.697	4.43	5	0.57	-8.027	-4.697	4.43	5	0.57	1.84	0.3	30000

Caratteristiche del materiale

(Circolare 7 21-01-19 C8.5.I) Muratura in mattoni pieni e malta di calce LC2_Corti

fb_	fhk	fvk0	fhmedio	τ0	fv0	μ	ϕ	fvk,lim	E	G	FC
120000			172500	9000	20000	0.577	0.767	6500	320000000	128000000	1.2

Verifiche a pressoflessione delle travi in muratura in combinazioni non sismiche

Sezione	γM	N	M	Mu	Comb.	c.s.	Verifica
ini.	3	611	-362.83	494.52	SLU 77	1.36	Si
fin.	3	-347	127.71	494.52	SLU 77	3.87	Si
ini.	3	601	-357.51	494.52	SLU 74	1.38	Si
fin.	3	-348	128.44	494.52	SLU 74	3.85	Si
ini.	3	530	-338.57	494.52	SLU 78	1.46	Si
fin.	3	-266	56.74	494.52	SLU 78	8.72	Si
ini.	3	531	-339.57	494.52	SLU 80	1.46	Si
fin.	3	-263	55.17	494.52	SLU 80	8.96	Si
ini.	3	520	-333.25	494.52	SLU 75	1.48	Si
fin.	3	-267	57.46	494.52	SLU 75	8.61	Si
ini.	3	632	-377.97	494.52	SLU 83	1.31	Si
fin.	3	-362	130.52	494.52	SLU 83	3.79	Si
ini.	3	541	-348.38	494.52	SLU 82	1.42	Si
fin.	3	-282	60.27	494.52	SLU 82	8.2	Si
ini.	3	613	-363.84	494.52	SLU 79	1.36	Si
fin.	3	-344	126.14	494.52	SLU 79	3.92	Si
ini.	3	551	-353.7	494.52	SLU 84	1.4	Si
fin.	3	-281	59.55	494.52	SLU 84	8.3	Si
ini.	3	623	-372.65	494.52	SLU 81	1.33	Si
fin.	3	-363	131.25	494.52	SLU 81	3.77	Si

Verifiche a taglio delle travi in muratura secondo §C8.7.1.3.1 in combinazioni non sismiche

Sezione	γM	N	M	V	Vt	Vp	Vt fess. diag.	Vt,lim	Comb.	c.s.	Verifica
ini.	3	548	-323.64	667			439	33	SLU 60	0.05	No
fin.	3	-325	119.87	-329			526	207	SLU 60	0.63	No
ini.	3	601	-357.51	723			439	0	SLU 74	0	No
fin.	3	-348	128.44	-342			532	210	SLU 74	0.61	No
ini.	3	613	-363.84	721			439	0	SLU 79	0	No
fin.	3	-344	126.14	-336			531	209	SLU 79	0.62	No
ini.	3	632	-377.97	778			439	0	SLU 83	0	No
fin.	3	-362	130.52	-374			536	211	SLU 83	0.56	No
ini.	3	548	-331.16	695			439	33	SLU 41	0.05	No
fin.	3	-310	108.67	-337			522	205	SLU 41	0.61	No
ini.	3	551	-353.7	712			439	30	SLU 84	0.04	No
fin.	3	-281	59.55	-396			514	202	SLU 84	0.51	No
ini.	3	623	-372.65	779			439	0	SLU 81	0	No
fin.	3	-363	131.25	-380			536	211	SLU 81	0.56	No
ini.	3	541	-348.38	714			439	37	SLU 82	0.05	No
fin.	3	-282	60.27	-402			514	202	SLU 82	0.5	No

Sezione	γM	N	M	V	Vt	Vp	Vt fess. diag.	Vt,lim	Comb.	c.s.	Verifica
ini.	3	557	-328.96	665			439	25	SLU 62	0.04	No
fin.	3	-324	119.15	-323			525	207	SLU 62	0.64	No
ini.	3	611	-362.83	721			439	0	SLU 77	0	No
fin.	3	-347	127.71	-336			532	210	SLU 77	0.62	No

Verifiche a pressoflessione delle travi in muratura in combinazioni sismiche

Sezione	γM	N	M	Mu	Comb.	c.s.	Verifica
ini.	2	-199	-160.28	741.78	SLV 5	4.63	Si
fin.	2	-1579	1232.51	741.78	SLV 5	0.6	No
ini.	2	1014	-317.68	741.78	SLV 11	2.33	Si
fin.	2	1101	-1049.47	741.78	SLV 11	0.71	No
ini.	2	1413	-1090.8	741.78	SLV 1	0.68	No
fin.	2	-1408	903.05	741.78	SLV 1	0.82	No
ini.	2	2011	-1311.18	741.78	SLV 4	0.57	No
fin.	2	-756	311.27	741.78	SLV 4	2.38	Si
ini.	2	-982	416.92	741.78	SLV 10	1.78	Si
fin.	2	-1073	923.13	741.78	SLV 10	0.8	No
ini.	2	-199	-160.28	741.78	SLV 6	4.63	Si
fin.	2	-1579	1232.51	741.78	SLV 6	0.6	No
ini.	2	1413	-1090.8	741.78	SLV 2	0.68	No
fin.	2	-1408	903.05	741.78	SLV 2	0.82	No
ini.	2	1014	-317.68	741.78	SLV 12	2.33	Si
fin.	2	1101	-1049.47	741.78	SLV 12	0.71	No
ini.	2	2011	-1311.18	741.78	SLV 3	0.57	No
fin.	2	-756	311.27	741.78	SLV 3	2.38	Si
ini.	2	-982	416.92	741.78	SLV 9	1.78	Si
fin.	2	-1073	923.13	741.78	SLV 9	0.8	No

Verifiche a taglio delle travi in muratura secondo §C8.7.1.3.1 in combinazioni sismiche

Sezione	γM	N	M	V	Vt	Vp	Vt fess. diag.	Vt,lim	Comb.	c.s.	Verifica
ini.	2	1796	-894.88	1022			659	0	SLV 7	0	No
fin.	2	595	-740.09	1149			659	137	SLV 7	0.12	No
ini.	2	1014	-317.68	389			659	0	SLV 11	0	No
fin.	2	1101	-1049.47	592			659	0	SLV 11	0	No
ini.	2	1413	-1090.8	1455			659	0	SLV 2	0	No
fin.	2	-1408	903.05	383			1034	403	SLV 2	1.05	Si
ini.	2	-598	612.84	-512			818	323	SLV 15	0.63	No
fin.	2	930	-720.01	-821			659	0	SLV 15	0	No
ini.	2	2011	-1311.18	1595			659	0	SLV 4	0	No
fin.	2	-756	311.27	1037			860	340	SLV 4	0.33	No
ini.	2	2011	-1311.18	1595			659	0	SLV 3	0	No
fin.	2	-756	311.27	1037			860	340	SLV 3	0.33	No
ini.	2	-598	612.84	-512			818	323	SLV 16	0.63	No
fin.	2	930	-720.01	-821			659	0	SLV 16	0	No
ini.	2	1796	-894.88	1022			659	0	SLV 8	0	No
fin.	2	595	-740.09	1149			659	137	SLV 8	0.12	No
ini.	2	1413	-1090.8	1455			659	0	SLV 1	0	No
fin.	2	-1408	903.05	383			1034	403	SLV 1	1.05	Si
ini.	2	1014	-317.68	389			659	0	SLV 12	0	No
fin.	2	1101	-1049.47	592			659	0	SLV 12	0	No

Tabella dei coefficienti di sicurezza minimi

Stato limite	Coeff.s.	Comb.	Verifica
PF_SLV	0.566	SLV 3	No
V_SLV	0	SLV 1	No
PF_SLU	1.308	SLU 83	Si
V_SLU	0	SLU 74	No

Trave di accoppiamento 56

Verifiche condotte secondo D.M. 17-01-18 (N.T.C.)

Dati geometrici

X ini.	Y ini.	Z ini.inf.	Z ini.sup.	H ini.	X fin.	Y fin.	Z fin.inf.	Z fin.sup	H fin.	Luce	Spessore	R. Trazione
-8.548	-3.169	3.42	5	1.58	-9.448	-3.169	3.42	5	1.58	0.9	0.28	30000

Caratteristiche del materiale

(Circolare 7 21-01-19 C8.5.I) Muratura in mattoni pieni e malta di calce LC2_Corti

fb_	fhk	fvk0	fhmedio	τ0	fv0	μ	ϕ	fvk,lim	E	G	FC
120000			172500	9000	20000	0.577	0.767	6500	320000000	128000000	1.2

Verifiche a pressoflessione delle travi in muratura in combinazioni non sismiche

Sezione	γM	N	M	Mu	Comb.	c.s.	Verifica
ini.	3	-1100	524.94	3546.36	SLU 40	6.76	Si
fin.	3	-1100	-784.2	3546.36	SLU 40	4.52	Si
ini.	3	-1392	450.9	3546.36	SLU 75	7.86	Si
fin.	3	-1392	-813.81	3546.36	SLU 75	4.36	Si
ini.	3	-1344	438.1	3546.36	SLU 61	8.09	Si
fin.	3	-1344	-784.1	3546.36	SLU 61	4.52	Si
ini.	3	-1452	224.16	3546.36	SLU 74	15.82	Si
fin.	3	-1452	-791.13	3546.36	SLU 74	4.48	Si
ini.	3	-1500	243.97	3546.36	SLU 83	14.54	Si
fin.	3	-1500	-799.4	3546.36	SLU 83	4.44	Si
ini.	3	-1300	644.17	3546.36	SLU 73	5.51	Si
fin.	3	-1300	-869.5	3546.36	SLU 73	4.08	Si
ini.	3	-1358	589.3	3546.36	SLU 76	6.02	Si

Sezione	γM	N	M	Mu	Comb.	c.s.	Verifica
fin.	3	-1358	-794.4	3546.36	SLU 76	4.46	Si
ini.	3	-1382	525.58	3546.36	SLU 82	6.75	Si
fin.	3	-1382	-897.18	3546.36	SLU 82	3.95	Si
ini.	3	-1442	298.84	3546.36	SLU 81	11.87	Si
fin.	3	-1442	-874.5	3546.36	SLU 81	4.06	Si
ini.	3	-1440	470.71	3546.36	SLU 84	7.53	Si
fin.	3	-1440	-822.07	3546.36	SLU 84	4.31	Si

Verifiche a taglio delle travi in muratura secondo §C8.7.1.3.1 in combinazioni non sismiche

Sezione	γM	N	M	V	Vt	Vp	Vt fess. diag.	Vt,lim	Comb.	c.s.	Verifica
ini.	3	-1100	524.94	-424			2144	847	SLU 40	2	Si
fin.	3	-1100	-784.2	-2468			2144	847	SLU 40	0.34	No
ini.	3	-1018	643.53	-604			2111	834	SLU 31	1.38	Si
fin.	3	-1018	-756.53	-2490			2111	834	SLU 31	0.33	No
ini.	3	-1382	525.58	-417			2256	892	SLU 82	2.14	Si
fin.	3	-1382	-897.18	-2722			2256	892	SLU 82	0.33	No
ini.	3	-1392	450.9	-320			2261	894	SLU 75	2.79	Si
fin.	3	-1392	-813.81	-2467			2261	894	SLU 75	0.36	No
ini.	3	-1300	644.17	-597			2224	879	SLU 73	1.47	Si
fin.	3	-1300	-869.5	-2744			2224	879	SLU 73	0.32	No
ini.	3	-1201	568.18	-586			2184	864	SLU 65	1.47	Si
fin.	3	-1201	-769.66	-2365			2184	864	SLU 65	0.37	No
ini.	3	-1440	470.71	-273			2280	901	SLU 84	3.3	Si
fin.	3	-1440	-822.07	-2577			2280	901	SLU 84	0.35	No
ini.	3	-1358	589.3	-453			2247	889	SLU 76	1.96	Si
fin.	3	-1358	-794.4	-2600			2247	889	SLU 76	0.34	No
ini.	3	-1076	588.66	-460			2134	843	SLU 34	1.83	Si
fin.	3	-1076	-681.43	-2345			2134	843	SLU 34	0.36	No
ini.	3	-1262	556.69	-525			2208	873	SLU 52	1.66	Si
fin.	3	-1262	-756.43	-2370			2208	873	SLU 52	0.37	No

Verifiche a pressoflessione delle travi in muratura in combinazioni sismiche

Sezione	γM	N	M	Mu	Comb.	c.s.	Verifica
ini.	2	465	4871.42	5319.53	SLV 1	1.09	Si
fin.	2	-102	-7130.78	5319.53	SLV 1	0.75	No
ini.	2	-3397	1821.16	5319.53	SLV 5	2.92	Si
fin.	2	-4163	-4425.33	5319.53	SLV 5	1.2	Si
ini.	2	2326	4702.94	5319.53	SLV 3	1.13	Si
fin.	2	2151	-5885	5319.53	SLV 3	0.9	No
ini.	2	-4367	-4405.24	5319.53	SLV 14	1.21	Si
fin.	2	-4193	4751.71	5319.53	SLV 14	1.12	Si
ini.	2	-3397	1821.16	5319.53	SLV 6	2.92	Si
fin.	2	-4163	-4425.33	5319.53	SLV 6	1.2	Si
ini.	2	-2506	-4573.72	5319.53	SLV 15	1.16	Si
fin.	2	-1939	5997.49	5319.53	SLV 15	0.89	No
ini.	2	-2506	-4573.72	5319.53	SLV 16	1.16	Si
fin.	2	-1939	5997.49	5319.53	SLV 16	0.89	No
ini.	2	2326	4702.94	5319.53	SLV 4	1.13	Si
fin.	2	2151	-5885	5319.53	SLV 4	0.9	No
ini.	2	-4367	-4405.24	5319.53	SLV 13	1.21	Si
fin.	2	-4193	4751.71	5319.53	SLV 13	1.12	Si
ini.	2	465	4871.42	5319.53	SLV 2	1.09	Si
fin.	2	-102	-7130.78	5319.53	SLV 2	0.75	No

Verifiche a taglio delle travi in muratura secondo §C8.7.1.3.1 in combinazioni sismiche

Sezione	γM	N	M	V	Vt	Vp	Vt fess. diag.	Vt,lim	Comb.	c.s.	Verifica
ini.	2	-2506	-4573.72	11397			3558	1405	SLV 15	0.12	No
fin.	2	-1939	5997.49	10435			3331	1317	SLV 15	0.13	No
ini.	2	2805	1259.54	-3357			2556	0	SLV 7	0	No
fin.	2	3348	-272.71	-4128			2556	0	SLV 7	0	No
ini.	2	2326	4702.94	-11469			2556	0	SLV 3	0	No
fin.	2	2151	-5885	-12897			2556	160	SLV 3	0.01	No
ini.	2	1356	-1523.46	3503			2556	598	SLV 11	0.17	No
fin.	2	2121	3292.04	2871			2556	195	SLV 11	0.07	No
ini.	2	-2506	-4573.72	11397			3558	1405	SLV 16	0.12	No
fin.	2	-1939	5997.49	10435			3331	1317	SLV 16	0.13	No
ini.	2	465	4871.42	-11562			2556	855	SLV 2	0.07	No
fin.	2	-102	-7130.78	-13414			2597	984	SLV 2	0.07	No
ini.	2	465	4871.42	-11562			2556	855	SLV 1	0.07	No
fin.	2	-102	-7130.78	-13414			2597	984	SLV 1	0.07	No
ini.	2	2326	4702.94	-11469			2556	0	SLV 4	0	No
fin.	2	2151	-5885	-12897			2556	160	SLV 4	0.01	No
ini.	2	2805	1259.54	-3357			2556	0	SLV 8	0	No
fin.	2	3348	-272.71	-4128			2556	0	SLV 8	0	No
ini.	2	1356	-1523.46	3503			2556	598	SLV 12	0.17	No
fin.	2	2121	3292.04	2871			2556	195	SLV 12	0.07	No

Tabella dei coefficienti di sicurezza minimi

Stato limite	Coeff.s.	Comb.	Verifica
PF_SLV	0.746	SLV 1	No
V_SLV	0	SLV 3	No
PF_SLU	3.953	SLU 82	Si
V_SLU	0.32	SLU 73	No

Trave di accoppiamento 57

Verifiche condotte secondo D.M. 17-01-18 (N.T.C.)

Dati geometrici

X ini.	Y ini.	Z ini.inf.	Z ini.sup.	H ini.	X fin.	Y fin.	Z fin.inf.	Z fin.sup	H fin.	Luce	Spessore	R. Trazione
-7.763	-4.403	4.43	5	0.57	-7.763	-3.313	4.43	5	0.57	1.09	0.28	30000

Caratteristiche del materiale

(Circolare 7 21-01-19 C8.5.I) Muratura in mattoni pieni e malta di calce LC2_Corti

fb_	fhk	fvk0	fhmedio	τ0	fv0	μ	ϕ	fvk,lim	E	G	FC
120000			172500	9000	20000	0.577	0.767	6500	320000000	128000000	1.2

Verifiche a pressoflessione delle travi in muratura in combinazioni non sismiche

Sezione	γM	N	M	Mu	Comb.	c.s.	Verifica
ini.	3	-228	244.19	461.55	SLU 47	1.89	Si
fin.	3	110	-24.14	461.55	SLU 47	19.12	Si
ini.	3	-211	229.09	461.55	SLU 44	2.01	Si
fin.	3	106	-22.48	461.55	SLU 44	20.53	Si
ini.	3	-220	239.24	461.55	SLU 13	1.93	Si
fin.	3	117	-28.47	461.55	SLU 13	16.21	Si
ini.	3	238	-230.93	461.55	SLU 81	2	Si
fin.	3	-159	41.86	461.55	SLU 81	11.03	Si
ini.	3	-202	219.82	461.55	SLU 68	2.1	Si
fin.	3	98	-22.42	461.55	SLU 68	20.59	Si
ini.	3	-258	273.98	461.55	SLU 5	1.68	Si
fin.	3	135	-31.84	461.55	SLU 5	14.5	Si
ini.	3	-240	258.88	461.55	SLU 2	1.78	Si
fin.	3	131	-30.18	461.55	SLU 2	15.29	Si
ini.	3	-231	249.61	461.55	SLU 26	1.85	Si
fin.	3	122	-30.11	461.55	SLU 26	15.33	Si
ini.	3	-203	224.14	461.55	SLU 10	2.06	Si
fin.	3	113	-26.81	461.55	SLU 10	17.21	Si
ini.	3	-214	234.51	461.55	SLU 23	1.97	Si
fin.	3	118	-28.45	461.55	SLU 23	16.22	Si

Verifiche a taglio delle travi in muratura secondo §C8.7.1.3.1 in combinazioni non sismiche

Sezione	γM	N	M	V	Vt	Vp	Vt fess. diag.	Vt,lim	Comb.	c.s.	Verifica
ini.	3	238	-230.93	346			410	115	SLU 81	0.33	No
fin.	3	-159	41.86	510			452	176	SLU 81	0.34	No
ini.	3	209	-201.14	285			410	120	SLU 39	0.42	No
fin.	3	-134	34.16	446			446	173	SLU 39	0.39	No
ini.	3	191	-186.05	266			410	123	SLU 41	0.46	No
fin.	3	-130	32.5	437			444	172	SLU 41	0.39	No
ini.	3	214	-209.04	324			410	119	SLU 74	0.37	No
fin.	3	-150	39.67	479			450	175	SLU 74	0.36	No
ini.	3	195	-191.47	308			410	123	SLU 62	0.4	No
fin.	3	-142	38.47	442			448	174	SLU 62	0.39	No
ini.	3	197	-193.94	305			410	122	SLU 77	0.4	No
fin.	3	-146	38.01	469			449	174	SLU 77	0.37	No
ini.	3	188	-185.84	297			410	124	SLU 79	0.42	No
fin.	3	-143	37.1	458			448	174	SLU 79	0.38	No
ini.	3	221	-215.83	327			410	118	SLU 83	0.36	No
fin.	3	-155	40.2	501			451	175	SLU 83	0.35	No
ini.	3	212	-206.57	327			410	120	SLU 60	0.37	No
fin.	3	-147	40.13	452			449	174	SLU 60	0.39	No
ini.	3	185	-181.3	308			410	125	SLU 64	0.4	No
fin.	3	-134	37.05	401			445	173	SLU 64	0.43	No

Verifiche a pressoflessione delle travi in muratura in combinazioni sismiche

Sezione	γM	N	M	Mu	Comb.	c.s.	Verifica
ini.	2	-2508	2885.14	692.32	SLV 8	0.24	No
fin.	2	1560	-537.41	692.32	SLV 8	1.29	Si
ini.	2	1662	-1704.95	692.32	SLV 1	0.41	No
fin.	2	-363	95.44	692.32	SLV 1	7.25	Si
ini.	2	1662	-1704.95	692.32	SLV 2	0.41	No
fin.	2	-363	95.44	692.32	SLV 2	7.25	Si
ini.	2	-2904	3244.13	692.32	SLV 11	0.21	No
fin.	2	1427	-480.38	692.32	SLV 11	1.44	Si
ini.	2	3198	-3532.2	692.32	SLV 6	0.2	No
fin.	2	-1637	538.55	692.32	SLV 6	1.29	Si
ini.	2	-2904	3244.13	692.32	SLV 12	0.21	No
fin.	2	1427	-480.38	692.32	SLV 12	1.44	Si
ini.	2	2802	-3173.2	692.32	SLV 9	0.22	No
fin.	2	-1771	595.57	692.32	SLV 9	1.16	Si
ini.	2	-2508	2885.14	692.32	SLV 7	0.24	No
fin.	2	1560	-537.41	692.32	SLV 7	1.29	Si
ini.	2	3198	-3532.2	692.32	SLV 5	0.2	No
fin.	2	-1637	538.55	692.32	SLV 5	1.29	Si
ini.	2	2802	-3173.2	692.32	SLV 10	0.22	No
fin.	2	-1771	595.57	692.32	SLV 10	1.16	Si

Verifiche a taglio delle travi in muratura secondo §C8.7.1.3.1 in combinazioni sismiche

Sezione	γM	N	M	V	Vt	Vp	Vt fess. diag.	Vt,lim	Comb.	c.s.	Verifica
ini.	2	-2508	2885.14	-2382			1284	471	SLV 8	0.2	No
fin.	2	1560	-537.41	-2324			615	0	SLV 8	0	No
ini.	2	1662	-1704.95	2057			615	0	SLV 1	0	No
fin.	2	-363	95.44	1788			711	279	SLV 1	0.16	No
ini.	2	-2508	2885.14	-2382			1284	471	SLV 7	0.2	No
fin.	2	1560	-537.41	-2324			615	0	SLV 7	0	No
ini.	2	3198	-3532.2	3430			615	0	SLV 6	0	No
fin.	2	-1637	538.55	3333			1051	404	SLV 6	0.12	No
ini.	2	1662	-1704.95	2057			615	0	SLV 2	0	No

Sezione	γM	N	M	V	Vt	Vp	Vt fess. diag.	Vt,lim	Comb.	c.s.	Verifica
fin.	2	-363	95.44	1788			711	279	SLV 2	0.16	No
ini.	2	-2904	3244.13	-2949			1389	498	SLV 11	0.17	No
fin.	2	1427	-480.38	-2698			615	0	SLV 11	0	No
ini.	2	-2904	3244.13	-2949			1389	498	SLV 12	0.17	No
fin.	2	1427	-480.38	-2698			615	0	SLV 12	0	No
ini.	2	2802	-3173.2	2863			615	0	SLV 9	0	No
fin.	2	-1771	595.57	2959			1087	415	SLV 9	0.14	No
ini.	2	3198	-3532.2	3430			615	0	SLV 5	0	No
fin.	2	-1637	538.55	3333			1051	404	SLV 5	0.12	No
ini.	2	2802	-3173.2	2863			615	0	SLV 10	0	No
fin.	2	-1771	595.57	2959			1087	415	SLV 10	0.14	No

Tabella dei coefficienti di sicurezza minimi

Stato limite	Coeff.s.	Comb.	Verifica
PF_SLV	0.196	SLV 5	No
V_SLV	0	SLV 1	No
PF_SLU	1.685	SLU 5	Si
V_SLU	0.331	SLU 81	No

Trave di accoppiamento 58

Verifiche condotte secondo D.M. 17-01-18 (N.T.C.)

Dati geometrici

X ini.	Y ini.	Z ini.inf.	Z ini.sup.	H ini.	X fin.	Y fin.	Z fin.inf.	Z fin.sup	H fin.	Luce	Spessore	R. Trazione
-5.088	5.94	1.32	3.32	2	-5.088	6.44	1.32	3.32	2	0.5	0.28	30000

Caratteristiche del materiale

(Circolare 7 21-01-19 C8.5.I) Muratura in mattoni pieni e malta di calce LC2_Corti

fb_	fhk	fvk0	fhmedio	τ0	fv0	μ	ϕ	fvk,lim	E	G	FC
120000			172500	9000	20000	0.577	0.767	6500	320000000	128000000	1.2

Verifiche a pressoflessione delle travi in muratura in combinazioni non sismiche

Sezione	γM	N	M	Mu	Comb.	c.s.	Verifica
ini.	3	-1281	-3770.97	5682.35	SLU 79	1.51	Si
fin.	3	-382	-1906.58	5682.35	SLU 79	2.98	Si
ini.	3	-1321	-3881.11	5682.35	SLU 83	1.46	Si
fin.	3	-391	-1963.84	5682.35	SLU 83	2.89	Si
ini.	3	-1310	-3801.94	5682.35	SLU 82	1.49	Si
fin.	3	-387	-1939.19	5682.35	SLU 82	2.93	Si
ini.	3	-1312	-3809.09	5682.35	SLU 81	1.49	Si
fin.	3	-387	-1938.87	5682.35	SLU 81	2.93	Si
ini.	3	-1279	-3763.82	5682.35	SLU 80	1.51	Si
fin.	3	-382	-1906.89	5682.35	SLU 80	2.98	Si
ini.	3	-1282	-3721.37	5682.35	SLU 75	1.53	Si
fin.	3	-382	-1898.87	5682.35	SLU 75	2.99	Si
ini.	3	-1293	-3800.54	5682.35	SLU 77	1.5	Si
fin.	3	-386	-1923.53	5682.35	SLU 77	2.95	Si
ini.	3	-1291	-3793.39	5682.35	SLU 78	1.5	Si
fin.	3	-386	-1923.84	5682.35	SLU 78	2.95	Si
ini.	3	-1318	-3873.96	5682.35	SLU 84	1.47	Si
fin.	3	-391	-1964.16	5682.35	SLU 84	2.89	Si
ini.	3	-1285	-3728.52	5682.35	SLU 74	1.52	Si
fin.	3	-382	-1898.56	5682.35	SLU 74	2.99	Si

Verifiche a taglio delle travi in muratura secondo §C8.7.1.3.1 in combinazioni non sismiche

Sezione	γM	N	M	V	Vt	Vp	Vt fess. diag.	Vt,lim	Comb.	c.s.	Verifica
ini.	3	-1321	-3881.11	-1946			2685	1061	SLU 83	0.55	No
fin.	3	-391	-1963.84	4505			2313	893	SLU 83	0.2	No
ini.	3	-1282	-3721.37	-1951			2670	1054	SLU 75	0.54	No
fin.	3	-382	-1898.87	4286			2309	891	SLU 75	0.21	No
ini.	3	-1293	-3800.54	-1879			2674	1056	SLU 77	0.56	No
fin.	3	-386	-1923.53	4404			2311	892	SLU 77	0.2	No
ini.	3	-1318	-3873.96	-1962			2684	1060	SLU 84	0.54	No
fin.	3	-391	-1964.16	4496			2313	893	SLU 84	0.2	No
ini.	3	-1312	-3809.09	-2002			2682	1059	SLU 81	0.53	No
fin.	3	-387	-1938.87	4395			2311	892	SLU 81	0.2	No
ini.	3	-1310	-3801.94	-2018			2681	1059	SLU 82	0.52	No
fin.	3	-387	-1939.19	4386			2311	892	SLU 82	0.2	No
ini.	3	-1281	-3770.97	-1850			2669	1054	SLU 79	0.57	No
fin.	3	-382	-1906.58	4369			2310	891	SLU 79	0.2	No
ini.	3	-1279	-3763.82	-1866			2668	1054	SLU 80	0.56	No
fin.	3	-382	-1906.89	4360			2309	891	SLU 80	0.2	No
ini.	3	-1285	-3728.52	-1935			2670	1054	SLU 74	0.54	No
fin.	3	-382	-1898.56	4295			2309	891	SLU 74	0.21	No
ini.	3	-1291	-3793.39	-1895			2673	1055	SLU 78	0.56	No
fin.	3	-386	-1923.84	4396			2311	892	SLU 78	0.2	No

Verifiche a pressoflessione delle travi in muratura in combinazioni sismiche

Sezione	γM	N	M	Mu	Comb.	c.s.	Verifica
ini.	2	-1439	-5363.16	8523.53	SLV 6	1.59	Si
fin.	2	-928	243.77	8523.53	SLV 6	34.96	Si
ini.	2	-1439	-5363.16	8523.53	SLV 5	1.59	Si
fin.	2	-928	243.77	8523.53	SLV 5	34.96	Si
ini.	2	-433	-4579.83	8523.53	SLV 16	1.86	Si
fin.	2	-115	-2872.54	8523.53	SLV 16	2.97	Si

Sezione	γM	N	M	Mu	Comb.	c.s.	Verifica
ini.	2	-1242	-7303.53	8523.53	SLV 10	1.17	Si
fin.	2	-959	-492	8523.53	SLV 10	17.32	Si
ini.	2	-433	-4579.83	8523.53	SLV 15	1.86	Si
fin.	2	-115	-2872.54	8523.53	SLV 15	2.97	Si
ini.	2	-1242	-7303.53	8523.53	SLV 9	1.17	Si
fin.	2	-959	-492	8523.53	SLV 9	17.32	Si
ini.	2	-701	-6881.74	8523.53	SLV 13	1.24	Si
fin.	2	-521	-2170.01	8523.53	SLV 13	3.93	Si
ini.	2	-351	369.49	8523.53	SLV 11	23.07	Si
fin.	2	396	-2833.76	8523.53	SLV 11	3.01	Si
ini.	2	-701	-6881.74	8523.53	SLV 14	1.24	Si
fin.	2	-521	-2170.01	8523.53	SLV 14	3.93	Si
ini.	2	-351	369.49	8523.53	SLV 12	23.07	Si
fin.	2	396	-2833.76	8523.53	SLV 12	3.01	Si

Verifiche a taglio delle travi in muratura secondo §C8.7.1.3.1 in combinazioni sismiche

Sezione	γM	N	M	V	Vt	Vp	Vt fess. diag.	Vt,lim	Comb.	c.s.	Verifica
ini.	2	-548	2309.86	-9909			3454	1331	SLV 8	0.13	No
fin.	2	427	-2097.99	-1844			3235	1121	SLV 8	0.61	No
ini.	2	-701	-6881.74	8391			3515	1361	SLV 14	0.16	No
fin.	2	-521	-2170.01	12954			3443	1326	SLV 14	0.1	No
ini.	2	-1090	1888.07	-11273			3671	1435	SLV 4	0.13	No
fin.	2	-11	-419.97	-7357			3239	1220	SLV 4	0.17	No
ini.	2	-1242	-7303.53	7027			3732	1463	SLV 9	0.21	No
fin.	2	-959	-492	7441			3619	1411	SLV 9	0.19	No
ini.	2	-433	-4579.83	4753			3408	1308	SLV 16	0.28	No
fin.	2	-115	-2872.54	11902			3281	1242	SLV 16	0.1	No
ini.	2	-701	-6881.74	8391			3515	1361	SLV 13	0.16	No
fin.	2	-521	-2170.01	12954			3443	1326	SLV 13	0.1	No
ini.	2	-1090	1888.07	-11273			3671	1435	SLV 3	0.13	No
fin.	2	-11	-419.97	-7357			3239	1220	SLV 3	0.17	No
ini.	2	-1242	-7303.53	7027			3732	1463	SLV 10	0.21	No
fin.	2	-959	-492	7441			3619	1411	SLV 10	0.19	No
ini.	2	-433	-4579.83	4753			3408	1308	SLV 15	0.28	No
fin.	2	-115	-2872.54	11902			3281	1242	SLV 15	0.1	No
ini.	2	-548	2309.86	-9909			3454	1331	SLV 7	0.13	No
fin.	2	427	-2097.99	-1844			3235	1121	SLV 7	0.61	No

Tabella dei coefficienti di sicurezza minimi

Stato limite	Coeff.s.	Comb.	Verifica
PF_SLV	1.167	SLV 9	Si
V_SLV	0.102	SLV 13	No
PF_SLU	1.464	SLU 83	Si
V_SLU	0.198	SLU 83	No

Trave di accoppiamento 59

Verifiche condotte secondo D.M. 17-01-18 (N.T.C.)

Dati geometrici

X ini.	Y ini.	Z ini.inf.	Z ini.sup.	H ini.	X fin.	Y fin.	Z fin.inf.	Z fin.sup	H fin.	Luce	Spessore	R. Trazione
-5.088	5.94	4.12	5	0.88	-5.088	6.44	4.12	5	0.88	0.5	0.28	30000

Caratteristiche del materiale

(Circolare 7 21-01-19 C8.5.I) Muratura in mattoni pieni e malta di calce LC2_Corti

fb_	fhk	fvk0	fhmedio	τ0	fv0	μ	ϕ	fvk,lim	E	G	FC
120000			172500	9000	20000	0.577	0.767	6500	320000000	128000000	1.2

Verifiche a pressoflessione delle travi in muratura in combinazioni non sismiche

Sezione	γM	N	M	Mu	Comb.	c.s.	Verifica
ini.	3	-1374	-530.43	1100.1	SLU 83	2.07	Si
fin.	3	-254	228.77	1100.1	SLU 83	4.81	Si
ini.	3	-1301	-505.6	1100.1	SLU 75	2.18	Si
fin.	3	-236	219.68	1100.1	SLU 75	5.01	Si
ini.	3	-1339	-520.81	1100.1	SLU 77	2.11	Si
fin.	3	-243	222.59	1100.1	SLU 77	4.94	Si
ini.	3	-1339	-516.73	1100.1	SLU 81	2.13	Si
fin.	3	-247	225.83	1100.1	SLU 81	4.87	Si
ini.	3	-1336	-515.22	1100.1	SLU 82	2.14	Si
fin.	3	-246	225.86	1100.1	SLU 82	4.87	Si
ini.	3	-1326	-515.38	1100.1	SLU 80	2.13	Si
fin.	3	-241	220.57	1100.1	SLU 80	4.99	Si
ini.	3	-1304	-507.12	1100.1	SLU 74	2.17	Si
fin.	3	-236	219.65	1100.1	SLU 74	5.01	Si
ini.	3	-1371	-528.91	1100.1	SLU 84	2.08	Si
fin.	3	-253	228.8	1100.1	SLU 84	4.81	Si
ini.	3	-1335	-519.3	1100.1	SLU 78	2.12	Si
fin.	3	-243	222.62	1100.1	SLU 78	4.94	Si
ini.	3	-1329	-516.89	1100.1	SLU 79	2.13	Si
fin.	3	-242	220.54	1100.1	SLU 79	4.99	Si

Verifiche a taglio delle travi in muratura secondo §C8.7.1.3.1 in combinazioni non sismiche

Sezione	γM	N	M	V	Vt	Vp	Vt fess. diag.	Vt,lim	Comb.	c.s.	Verifica
ini.	3	-1301	-505.6	5468			1469	574	SLU 75	0.1	No
fin.	3	-236	219.68	131			1043	405	SLU 75	3.09	Si
ini.	3	-1335	-519.3	5572			1483	579	SLU 78	0.1	No

Sezione	γM	N	M	V	Vt	Vp	Vt fess. diag.	Vt,lim	Comb.	c.s.	Verifica
fin.	3	-243	222.62	157			1046	406	SLU 78	2.59	Si
ini.	3	-1329	-516.89	5524			1480	578	SLU 79	0.1	No
fin.	3	-242	220.54	166			1046	406	SLU 79	2.45	Si
ini.	3	-1326	-515.38	5518			1479	577	SLU 80	0.1	No
fin.	3	-241	220.57	161			1045	406	SLU 80	2.52	Si
ini.	3	-1336	-515.22	5567			1483	579	SLU 82	0.1	No
fin.	3	-246	225.86	153			1047	407	SLU 82	2.65	Si
ini.	3	-1374	-530.43	5677			1499	584	SLU 83	0.1	No
fin.	3	-254	228.77	184			1051	409	SLU 83	2.22	Si
ini.	3	-1371	-528.91	5671			1497	583	SLU 84	0.1	No
fin.	3	-253	228.8	179			1050	408	SLU 84	2.28	Si
ini.	3	-1339	-516.73	5573			1485	579	SLU 81	0.1	No
fin.	3	-247	225.83	158			1048	407	SLU 81	2.58	Si
ini.	3	-1339	-520.81	5578			1484	579	SLU 77	0.1	No
fin.	3	-243	222.59	162			1046	407	SLU 77	2.52	Si
ini.	3	-1304	-507.12	5474			1470	574	SLU 74	0.1	No
fin.	3	-236	219.65	136			1043	405	SLU 74	2.98	Si

Verifiche a pressoflessione delle travi in muratura in combinazioni sismiche

Sezione	γM	N	M	Mu	Comb.	c.s.	Verifica
ini.	2	-1691	-696.44	1650.16	SLV 5	2.37	Si
fin.	2	-453	125.76	1650.16	SLV 5	13.12	Si
ini.	2	1662	583.07	1650.16	SLV 4	2.83	Si
fin.	2	477	118.31	1650.16	SLV 4	13.95	Si
ini.	2	-2463	-897.47	1650.16	SLV 15	1.84	Si
fin.	2	-497	183.04	1650.16	SLV 15	9.02	Si
ini.	2	-1691	-696.44	1650.16	SLV 6	2.37	Si
fin.	2	-453	125.76	1650.16	SLV 6	13.12	Si
ini.	2	-2928	-1140.6	1650.16	SLV 9	1.45	Si
fin.	2	-745	145.17	1650.16	SLV 9	11.37	Si
ini.	2	-2463	-897.47	1650.16	SLV 16	1.84	Si
fin.	2	-497	183.04	1650.16	SLV 16	9.02	Si
ini.	2	1662	583.07	1650.16	SLV 3	2.83	Si
fin.	2	477	118.31	1650.16	SLV 3	13.95	Si
ini.	2	-2928	-1140.6	1650.16	SLV 10	1.45	Si
fin.	2	-745	145.17	1650.16	SLV 10	11.37	Si
ini.	2	-3344	-1248.85	1650.16	SLV 14	1.32	Si
fin.	2	-768	176.02	1650.16	SLV 14	9.37	Si
ini.	2	-3344	-1248.85	1650.16	SLV 13	1.32	Si
fin.	2	-768	176.02	1650.16	SLV 13	9.37	Si

Verifiche a taglio delle travi in muratura secondo §C8.7.1.3.1 in combinazioni sismiche

Sezione	γM	N	M	V	Vt	Vp	Vt fess. diag.	Vt,lim	Comb.	c.s.	Verifica
ini.	2	1246	474.82	894			1423	0	SLV 8	0	No
fin.	2	453	149.16	-3311			1423	426	SLV 8	0.13	No
ini.	2	-2928	-1140.6	6455			2595	984	SLV 10	0.15	No
fin.	2	-745	145.17	3356			1721	678	SLV 10	0.2	No
ini.	2	1662	583.07	-569			1423	0	SLV 3	0	No
fin.	2	477	118.31	-3434			1423	419	SLV 3	0.12	No
ini.	2	-2463	-897.47	6923			2409	928	SLV 15	0.13	No
fin.	2	-497	183.04	1964			1622	634	SLV 15	0.32	No
ini.	2	-3344	-1248.85	7917			2761	1032	SLV 13	0.13	No
fin.	2	-768	176.02	3478			1731	683	SLV 13	0.2	No
ini.	2	1662	583.07	-569			1423	0	SLV 4	0	No
fin.	2	477	118.31	-3434			1423	419	SLV 4	0.12	No
ini.	2	-2928	-1140.6	6455			2595	984	SLV 9	0.15	No
fin.	2	-745	145.17	3356			1721	678	SLV 9	0.2	No
ini.	2	-2463	-897.47	6923			2409	928	SLV 16	0.13	No
fin.	2	-497	183.04	1964			1622	634	SLV 16	0.32	No
ini.	2	1246	474.82	894			1423	0	SLV 7	0	No
fin.	2	453	149.16	-3311			1423	426	SLV 7	0.13	No
ini.	2	-3344	-1248.85	7917			2761	1032	SLV 14	0.13	No
fin.	2	-768	176.02	3478			1731	683	SLV 14	0.2	No

Tabella dei coefficienti di sicurezza minimi

Stato limite	Coeff.s.	Comb.	Verifica
PF_SLV	1.321	SLV 13	Si
V_SLV	0	SLV 3	No
PF_SLU	2.074	SLU 83	Si
V_SLU	0.103	SLU 83	No

Trave di accoppiamento 60

Verifiche condotte secondo D.M. 17-01-18 (N.T.C.)

Dati geometrici

X ini.	Y ini.	Z ini.inf.	Z ini.sup.	H ini.	X fin.	Y fin.	Z fin.inf.	Z fin.sup	H fin.	Luce	Spessore	R. Trazione
-6.467	-3.169	1.32	2.22	0.9	-7.467	-3.169	1.32	2.22	0.9	1	0.28	30000

Caratteristiche del materiale

(Circolare 7 21-01-19 C8.5.I) Muratura in mattoni pieni e malta di calce LC2_Corti

fb_	fhk	fvk0	fhmedio	τ0	fv0	μ	ϕ	fvk,lim	E	G	FC
120000			172500	9000	20000	0.577	0.767	6500	320000000	128000000	1.2

Verifiche a pressoflessione delle travi in muratura in combinazioni non sismiche

Sezione	γM	N	M	Mu	Comb.	c.s.	Verifica

Sezione	γM	N	M	Mu	Comb.	c.s.	Verifica
ini.	3	-2575	-2176.23	1150.68	SLU 84	0.53	No
fin.	3	-2827	53.71	1150.68	SLU 84	21.42	Si
ini.	3	-3166	-2149.1	1150.68	SLU 60	0.54	No
fin.	3	-3036	46.52	1150.68	SLU 60	24.74	Si
ini.	3	-3353	-2318.46	1150.68	SLU 77	0.5	No
fin.	3	-3282	93.43	1150.68	SLU 77	12.32	Si
ini.	3	-2499	-2112.69	1150.68	SLU 78	0.54	No
fin.	3	-2756	73.5	1150.68	SLU 78	15.66	Si
ini.	3	-3168	-2174.54	1150.68	SLU 62	0.53	No
fin.	3	-3084	82.72	1150.68	SLU 62	13.91	Si
ini.	3	-3351	-2293.02	1150.68	SLU 74	0.5	No
fin.	3	-3235	57.23	1150.68	SLU 74	20.11	Si
ini.	3	-3314	-2305.01	1150.68	SLU 79	0.5	No
fin.	3	-3265	105.4	1150.68	SLU 79	10.92	Si
ini.	3	-2574	-2150.79	1150.68	SLU 82	0.54	No
fin.	3	-2780	17.51	1150.68	SLU 82	65.7	Si
ini.	3	-3428	-2356.56	1150.68	SLU 81	0.49	No
fin.	3	-3306	37.44	1150.68	SLU 81	30.73	Si
ini.	3	-3429	-2382.01	1150.68	SLU 83	0.48	No
fin.	3	-3353	73.64	1150.68	SLU 83	15.63	Si

Verifiche a taglio delle travi in muratura secondo §C8.7.1.3.1 in combinazioni non sismiche

Sezione	γM	N	M	V	Vt	Vp	Vt fess. diag.	Vt,lim	Comb.	c.s.	Verifica
ini.	3	-2497	-2087.24	522			1772	655	SLU 75	1.25	Si
fin.	3	-2708	37.3	3659			1848	676	SLU 75	0.18	No
ini.	3	-2314	-1968.77	543			1706	637	SLU 63	1.17	Si
fin.	3	-2557	62.79	3492			1794	661	SLU 63	0.19	No
ini.	3	-2460	-2099.24	616			1759	652	SLU 80	1.06	Si
fin.	3	-2739	85.47	3749			1859	678	SLU 80	0.18	No
ini.	3	-2499	-2112.69	591			1773	655	SLU 78	1.11	Si
fin.	3	-2756	73.5	3754			1866	680	SLU 78	0.18	No
ini.	3	-1628	-1729.15	460			1459	563	SLU 55	1.22	Si
fin.	3	-2071	45.06	3248			1619	612	SLU 55	0.19	No
ini.	3	-2575	-2176.23	590			1801	663	SLU 84	1.12	Si
fin.	3	-2827	53.71	3843			1891	687	SLU 84	0.18	No
ini.	3	-1887	-1911.17	438			1553	592	SLU 73	1.35	Si
fin.	3	-2293	-0.22	3504			1699	635	SLU 73	0.18	No
ini.	3	-3429	-2382.01	650			2108	741	SLU 83	1.14	Si
fin.	3	-3353	73.64	3927			2081	734	SLU 83	0.19	No
ini.	3	-2574	-2150.79	520			1800	663	SLU 82	1.27	Si
fin.	3	-2780	17.51	3748			1874	682	SLU 82	0.18	No
ini.	3	-1889	-1936.61	507			1554	592	SLU 76	1.17	Si
fin.	3	-2340	35.98	3599			1716	640	SLU 76	0.18	No

Verifiche a pressoflessione delle travi in muratura in combinazioni sismiche

Sezione	γM	N	M	Mu	Comb.	c.s.	Verifica
ini.	2	-7276	-4120.62	1726.01	SLV 11	0.42	No
fin.	2	-4969	2637.32	1726.01	SLV 11	0.65	No
ini.	2	-995	-3307.18	1726.01	SLV 15	0.52	No
fin.	2	-4109	3502.84	1726.01	SLV 15	0.49	No
ini.	2	-9147	-3481.03	1726.01	SLV 7	0.5	No
fin.	2	-4270	859.75	1726.01	SLV 7	2.01	Si
ini.	2	-3719	161.62	1726.01	SLV 2	10.68	Si
fin.	2	-344	-3458.11	1726.01	SLV 2	0.5	No
ini.	2	-3719	161.62	1726.01	SLV 1	10.68	Si
fin.	2	-344	-3458.11	1726.01	SLV 1	0.5	No
ini.	2	2561	975.06	1726.01	SLV 5	1.77	Si
fin.	2	516	-2592.59	1726.01	SLV 5	0.67	No
ini.	2	2561	975.06	1726.01	SLV 6	1.77	Si
fin.	2	516	-2592.59	1726.01	SLV 6	0.67	No
ini.	2	-9147	-3481.03	1726.01	SLV 8	0.5	No
fin.	2	-4270	859.75	1726.01	SLV 8	2.01	Si
ini.	2	-995	-3307.18	1726.01	SLV 16	0.52	No
fin.	2	-4109	3502.84	1726.01	SLV 16	0.49	No
ini.	2	-7276	-4120.62	1726.01	SLV 12	0.42	No
fin.	2	-4969	2637.32	1726.01	SLV 12	0.65	No

Verifiche a taglio delle travi in muratura secondo §C8.7.1.3.1 in combinazioni sismiche

Sezione	γM	N	M	V	Vt	Vp	Vt fess. diag.	Vt,lim	Comb.	c.s.	Verifica
ini.	2	-3719	161.62	-6570			2649	980	SLV 2	0.15	No
fin.	2	-344	-3458.11	-4295			1434	556	SLV 2	0.13	No
ini.	2	4432	335.47	216			1310	0	SLV 9	0	No
fin.	2	-183	-815.02	3651			1376	528	SLV 9	0.14	No
ini.	2	2517	-1970.35	6060			1310	0	SLV 14	0	No
fin.	2	-2673	2467.14	8821			2273	871	SLV 14	0.1	No
ini.	2	-995	-3307.18	7280			1668	660	SLV 16	0.09	No
fin.	2	-4109	3502.84	9318			2789	1018	SLV 16	0.11	No
ini.	2	2561	975.06	-3573			1310	0	SLV 5	0	No
fin.	2	516	-2592.59	-284			1310	379	SLV 5	1.34	Si
ini.	2	-995	-3307.18	7280			1668	660	SLV 15	0.09	No
fin.	2	-4109	3502.84	9318			2789	1018	SLV 15	0.11	No
ini.	2	2517	-1970.35	6060			1310	0	SLV 13	0	No
fin.	2	-2673	2467.14	8821			2273	871	SLV 13	0.1	No
ini.	2	4432	335.47	216			1310	0	SLV 10	0	No
fin.	2	-183	-815.02	3651			1376	528	SLV 10	0.14	No
ini.	2	2561	975.06	-3573			1310	0	SLV 6	0	No
fin.	2	516	-2592.59	-284			1310	379	SLV 6	1.34	Si
ini.	2	-3719	161.62	-6570			2649	980	SLV 1	0.15	No
fin.	2	-344	-3458.11	-4295			1434	556	SLV 1	0.13	No

Tabella dei coefficienti di sicurezza minimi

Stato limite	Coeff.s.	Comb.	Verifica
PF_SLV	0.419	SLV 11	No
V_SLV	0	SLV 5	No
PF_SLU	0.483	SLU 83	No
V_SLU	0.178	SLU 76	No

Trave di accoppiamento 61

Verifiche condotte secondo D.M. 17-01-18 (N.T.C.)

Dati geometrici

X ini.	Y ini.	Z ini.inf.	Z ini.sup.	H ini.	X fin.	Y fin.	Z fin.inf.	Z fin.sup	H fin.	Luce	Spessore	R. Trazione
-6.467	-3.169	4.12	5	0.88	-7.467	-3.169	4.12	5	0.88	1	0.28	30000

Caratteristiche del materiale

(Circolare 7 21-01-19 C8.5.I) Muratura in mattoni pieni e malta di calce LC2_Corti

fb_	fhk	fvk0	fhmedio	τ0	fv0	μ	ϕ	fvk,lim	E	G	FC
120000			172500	9000	20000	0.577	0.767	6500	320000000	128000000	1.2

Verifiche a pressoflessione delle travi in muratura in combinazioni non sismiche

Sezione	γM	N	M	Mu	Comb.	c.s.	Verifica
ini.	3	613	-370.92	1100.1	SLU 75	2.97	Si
fin.	3	1769	532.03	1100.1	SLU 75	2.07	Si
ini.	3	650	-381.81	1100.1	SLU 82	2.88	Si
fin.	3	1853	559.02	1100.1	SLU 82	1.97	Si
ini.	3	537	-407.68	1100.1	SLU 77	2.7	Si
fin.	3	1814	534.24	1100.1	SLU 77	2.06	Si
ini.	3	579	-358.47	1100.1	SLU 76	3.07	Si
fin.	3	1728	533.42	1100.1	SLU 76	2.06	Si
ini.	3	539	-386.57	1100.1	SLU 78	2.85	Si
fin.	3	1773	537.85	1100.1	SLU 78	2.05	Si
ini.	3	502	-409.29	1100.1	SLU 79	2.69	Si
fin.	3	1801	533.22	1100.1	SLU 79	2.06	Si
ini.	3	648	-402.92	1100.1	SLU 81	2.73	Si
fin.	3	1894	555.41	1100.1	SLU 81	1.98	Si
ini.	3	504	-388.18	1100.1	SLU 80	2.83	Si
fin.	3	1760	536.84	1100.1	SLU 80	2.05	Si
ini.	3	575	-418.57	1100.1	SLU 83	2.63	Si
fin.	3	1899	561.23	1100.1	SLU 83	1.96	Si
ini.	3	577	-397.46	1100.1	SLU 84	2.77	Si
fin.	3	1858	564.84	1100.1	SLU 84	1.95	Si

Verifiche a taglio delle travi in muratura secondo §C8.7.1.3.1 in combinazioni non sismiche

Sezione	γM	N	M	V	Vt	Vp	Vt fess. diag.	Vt,lim	Comb.	c.s.	Verifica
ini.	3	594	-361.35	4268			835	165	SLU 60	0.04	No
fin.	3	1667	488.73	-800			835	0	SLU 60	0	No
ini.	3	556	-350.46	4105			835	179	SLU 53	0.04	No
fin.	3	1583	461.74	-792			835	0	SLU 53	0	No
ini.	3	450	-346.61	4088			835	211	SLU 59	0.05	No
fin.	3	1533	470.16	-763			835	0	SLU 59	0	No
ini.	3	596	-340.24	4184			835	165	SLU 61	0.04	No
fin.	3	1626	492.35	-823			835	0	SLU 61	0	No
ini.	3	448	-367.72	4172			835	212	SLU 58	0.05	No
fin.	3	1574	466.55	-740			835	0	SLU 58	0	No
ini.	3	473	-225.03	2748			835	205	SLU 1	0.07	No
fin.	3	1081	306.79	-615			835	0	SLU 1	0	No
ini.	3	482	-366.1	4187			835	202	SLU 56	0.05	No
fin.	3	1587	467.56	-764			835	0	SLU 56	0	No
ini.	3	485	-345	4103			835	201	SLU 57	0.05	No
fin.	3	1546	471.18	-787			835	0	SLU 57	0	No
ini.	3	558	-329.35	4021			835	178	SLU 54	0.04	No
fin.	3	1542	465.35	-815			835	0	SLU 54	0	No
ini.	3	525	-316.89	3950			835	189	SLU 55	0.05	No
fin.	3	1501	466.75	-806			835	0	SLU 55	0	No

Verifiche a pressoflessione delle travi in muratura in combinazioni sismiche

Sezione	γM	N	M	Mu	Comb.	c.s.	Verifica
ini.	2	676	-309.97	1650.16	SLV 7	5.32	Si
fin.	2	2207	876.31	1650.16	SLV 7	1.88	Si
ini.	2	-2330	-996.76	1650.16	SLV 11	1.66	Si
fin.	2	2795	1267.76	1650.16	SLV 11	1.3	Si
ini.	2	-4917	-1518.12	1650.16	SLV 15	1.09	Si
fin.	2	2580	1217.9	1650.16	SLV 15	1.35	Si
ini.	2	-4128	-1278.22	1650.16	SLV 13	1.29	Si
fin.	2	1808	783.71	1650.16	SLV 13	2.11	Si
ini.	2	-2330	-996.76	1650.16	SLV 12	1.66	Si
fin.	2	2795	1267.76	1650.16	SLV 12	1.3	Si
ini.	2	5894	1011.08	1650.16	SLV 2	1.63	Si
fin.	2	-152	-521.12	1650.16	SLV 2	3.17	Si
ini.	2	-4128	-1278.22	1650.16	SLV 14	1.29	Si
fin.	2	1808	783.71	1650.16	SLV 14	2.11	Si
ini.	2	5894	1011.08	1650.16	SLV 1	1.63	Si
fin.	2	-152	-521.12	1650.16	SLV 1	3.17	Si
ini.	2	676	-309.97	1650.16	SLV 8	5.32	Si
fin.	2	2207	876.31	1650.16	SLV 8	1.88	Si
ini.	2	-4917	-1518.12	1650.16	SLV 16	1.09	Si

Sezione	γM	N	M	Mu	Comb.	c.s.	Verifica
fin.	2	2580	1217.9	1650.16	SLV 16	1.35	Si

Verifiche a taglio delle travi in muratura secondo §C8.7.1.3.1 in combinazioni sismiche

Sezione	γM	N	M	V	Vt	Vp	Vt fess. diag.	Vt,lim	Comb.	c.s.	Verifica
ini.	2	-2330	-996.76	6314			2073	802	SLV 11	0.13	No
fin.	2	2795	1267.76	2772			1253	0	SLV 11	0	No
ini.	2	5105	771.17	-1226			1253	0	SLV 3	0	No
fin.	2	620	-86.93	-3120			1253	332	SLV 3	0.11	No
ini.	2	5894	1011.08	-2307			1253	0	SLV 1	0	No
fin.	2	-152	-521.12	-4579			1306	500	SLV 1	0.11	No
ini.	2	676	-309.97	3416			1253	317	SLV 7	0.09	No
fin.	2	2207	876.31	838			1253	0	SLV 7	0	No
ini.	2	676	-309.97	3416			1253	317	SLV 8	0.09	No
fin.	2	2207	876.31	838			1253	0	SLV 8	0	No
ini.	2	5894	1011.08	-2307			1253	0	SLV 2	0	No
fin.	2	-152	-521.12	-4579			1306	500	SLV 2	0.11	No
ini.	2	3307	489.71	-185			1253	0	SLV 5	0	No
fin.	2	-367	-570.98	-4025			1382	537	SLV 5	0.13	No
ini.	2	3307	489.71	-185			1253	0	SLV 6	0	No
fin.	2	-367	-570.98	-4025			1382	537	SLV 6	0.13	No
ini.	2	-2330	-996.76	6314			2073	802	SLV 12	0.13	No
fin.	2	2795	1267.76	2772			1253	0	SLV 12	0	No
ini.	2	5105	771.17	-1226			1253	0	SLV 4	0	No
fin.	2	620	-86.93	-3120			1253	332	SLV 4	0.11	No

Tabella dei coefficienti di sicurezza minimi

Stato limite	Coeff.s.	Comb.	Verifica
PF_SLV	1.087	SLV 15	Si
V_SLV	0	SLV 1	No
PF_SLU	1.948	SLU 84	Si
V_SLU	0	SLU 1	No

Trave di accoppiamento 62

Verifiche condotte secondo D.M. 17-01-18 (N.T.C.)

Dati geometrici

X ini.	Y ini.	Z ini.inf.	Z ini.sup.	H ini.	X fin.	Y fin.	Z fin.inf.	Z fin.sup	H fin.	Luce	Spessore	R. Trazione
-5.437	-3.169	1.32	3.32	2	-5.937	-3.169	1.32	3.32	2	0.5	0.28	30000

Caratteristiche del materiale

(Circolare 7 21-01-19 C8.5.I) Muratura in mattoni pieni e malta di calce LC2_Corti

fb_	fhk	fvk0	fhmedio	τ0	fv0	μ	ϕ	fvk,lim	E	G	FC
120000			172500	9000	20000	0.577	0.767	6500	320000000	128000000	1.2

Verifiche a pressoflessione delle travi in muratura in combinazioni non sismiche

Sezione	γM	N	M	Mu	Comb.	c.s.	Verifica
ini.	3	-26	4634.33	5682.35	SLU 75	1.23	Si
fin.	3	-939	-1077.06	5682.35	SLU 75	5.28	Si
ini.	3	6	4596.58	5682.35	SLU 80	1.24	Si
fin.	3	-928	-1061.55	5682.35	SLU 80	5.35	Si
ini.	3	105	5000.72	5682.35	SLU 81	1.14	Si
fin.	3	-1504	-1711.89	5682.35	SLU 81	3.32	Si
ini.	3	-21	4787.17	5682.35	SLU 82	1.19	Si
fin.	3	-956	-1115.88	5682.35	SLU 82	5.09	Si
ini.	3	123	4854.99	5682.35	SLU 77	1.17	Si
fin.	3	-1494	-1676.11	5682.35	SLU 77	3.39	Si
ini.	3	132	4810.13	5682.35	SLU 79	1.18	Si
fin.	3	-1476	-1657.56	5682.35	SLU 79	3.43	Si
ini.	3	-3	4641.44	5682.35	SLU 78	1.22	Si
fin.	3	-946	-1080.1	5682.35	SLU 78	5.26	Si
ini.	3	128	5007.83	5682.35	SLU 83	1.13	Si
fin.	3	-1511	-1714.93	5682.35	SLU 83	3.31	Si
ini.	3	3	4794.28	5682.35	SLU 84	1.19	Si
fin.	3	-964	-1118.92	5682.35	SLU 84	5.08	Si
ini.	3	99	4847.88	5682.35	SLU 74	1.17	Si
fin.	3	-1486	-1673.07	5682.35	SLU 74	3.4	Si

Verifiche a taglio delle travi in muratura secondo §C8.7.1.3.1 in combinazioni non sismiche

Sezione	γM	N	M	V	Vt	Vp	Vt fess. diag.	Vt,lim	Comb.	c.s.	Verifica
ini.	3	-26	4634.33	-12507			2167	817	SLU 75	0.07	No
fin.	3	-939	-1077.06	-9229			2532	995	SLU 75	0.11	No
ini.	3	6	4596.58	-12349			2157	810	SLU 80	0.07	No
fin.	3	-928	-1061.55	-9080			2528	993	SLU 80	0.11	No
ini.	3	105	5000.72	-13156			2157	788	SLU 81	0.06	No
fin.	3	-1504	-1711.89	-9980			2758	1091	SLU 81	0.11	No
ini.	3	99	4847.88	-12741			2157	790	SLU 74	0.06	No
fin.	3	-1486	-1673.07	-9657			2751	1088	SLU 74	0.11	No
ini.	3	-3	4641.44	-12485			2158	812	SLU 78	0.07	No
fin.	3	-946	-1080.1	-9187			2535	996	SLU 78	0.11	No
ini.	3	-21	4787.17	-12922			2165	816	SLU 82	0.06	No
fin.	3	-956	-1115.88	-9552			2539	998	SLU 82	0.1	No
ini.	3	132	4810.13	-12583			2157	782	SLU 79	0.06	No
fin.	3	-1476	-1657.56	-9508			2747	1086	SLU 79	0.11	No
ini.	3	123	4854.99	-12719			2157	784	SLU 77	0.06	No
fin.	3	-1494	-1676.11	-9615			2754	1089	SLU 77	0.11	No

Sezione	γM	N	M	V	Vt	Vp	Vt fess. diag.	Vt,lim	Comb.	c.s.	Verifica
ini.	3	3	4794.28	-12900			2157	811	SLU 84	0.06	No
fin.	3	-964	-1118.92	-9510			2542	999	SLU 84	0.11	No
ini.	3	128	5007.83	-13134			2157	783	SLU 83	0.06	No
fin.	3	-1511	-1714.93	-9938			2761	1092	SLU 83	0.11	No

Verifiche a pressoflessione delle travi in muratura in combinazioni sismiche

Sezione	γM	N	M	Mu	Comb.	c.s.	Verifica
ini.	2	-4440	5728.16	8523.53	SLV 2	1.49	Si
fin.	2	-2071	-1111.03	8523.53	SLV 2	7.67	Si
ini.	2	-2260	6414.58	8523.53	SLV 5	1.33	Si
fin.	2	-505	1428.85	8523.53	SLV 5	5.97	Si
ini.	2	-3811	4183.52	8523.53	SLV 3	2.04	Si
fin.	2	-2634	-2814.33	8523.53	SLV 3	3.03	Si
ini.	2	-2260	6414.58	8523.53	SLV 6	1.33	Si
fin.	2	-505	1428.85	8523.53	SLV 6	5.97	Si
ini.	2	-165	1265.8	8523.53	SLV 7	6.73	Si
fin.	2	-2382	-4248.83	8523.53	SLV 7	2.01	Si
ini.	2	237	5458.31	8523.53	SLV 9	1.56	Si
fin.	2	275	1902.58	8523.53	SLV 9	4.48	Si
ini.	2	-165	1265.8	8523.53	SLV 8	6.73	Si
fin.	2	-2382	-4248.83	8523.53	SLV 8	2.01	Si
ini.	2	-4440	5728.16	8523.53	SLV 1	1.49	Si
fin.	2	-2071	-1111.03	8523.53	SLV 1	7.67	Si
ini.	2	-3811	4183.52	8523.53	SLV 4	2.04	Si
fin.	2	-2634	-2814.33	8523.53	SLV 4	3.03	Si
ini.	2	237	5458.31	8523.53	SLV 10	1.56	Si
fin.	2	275	1902.58	8523.53	SLV 10	4.48	Si

Verifiche a taglio delle travi in muratura secondo §C8.7.1.3.1 in combinazioni sismiche

Sezione	γM	N	M	V	Vt	Vp	Vt fess. diag.	Vt,lim	Comb.	c.s.	Verifica
ini.	2	3884	2540.58	378			3235	0	SLV 13	0	No
fin.	2	527	468.08	3429			3235	1097	SLV 13	0.32	No
ini.	2	4512	995.95	2153			3235	0	SLV 15	0	No
fin.	2	-36	-1235.23	3409			3249	1225	SLV 15	0.36	No
ini.	2	-3811	4183.52	-18111			4759	1871	SLV 4	0.1	No
fin.	2	-2634	-2814.33	-16944			4289	1696	SLV 4	0.1	No
ini.	2	-3811	4183.52	-18111			4759	1871	SLV 3	0.1	No
fin.	2	-2634	-2814.33	-16944			4289	1696	SLV 3	0.1	No
ini.	2	-2260	6414.58	-14864			4139	1636	SLV 5	0.11	No
fin.	2	-505	1428.85	-9777			3437	1323	SLV 5	0.14	No
ini.	2	4512	995.95	2153			3235	0	SLV 16	0	No
fin.	2	-36	-1235.23	3409			3249	1225	SLV 16	0.36	No
ini.	2	-2260	6414.58	-14864			4139	1636	SLV 6	0.11	No
fin.	2	-505	1428.85	-9777			3437	1323	SLV 6	0.14	No
ini.	2	-4440	5728.16	-19886			5011	1958	SLV 2	0.1	No
fin.	2	-2071	-1111.03	-16924			4063	1606	SLV 2	0.09	No
ini.	2	-4440	5728.16	-19886			5011	1958	SLV 1	0.1	No
fin.	2	-2071	-1111.03	-16924			4063	1606	SLV 1	0.09	No
ini.	2	3884	2540.58	378			3235	0	SLV 14	0	No
fin.	2	527	468.08	3429			3235	1097	SLV 14	0.32	No

Tabella dei coefficienti di sicurezza minimi

Stato limite	Coeff.s.	Comb.	Verifica
PF_SLV	1.329	SLV 5	Si
V_SLV	0	SLV 13	No
PF_SLU	1.135	SLU 83	Si
V_SLU	0.06	SLU 83	No

Trave di accoppiamento 63

Verifiche condotte secondo D.M. 17-01-18 (N.T.C.)

Dati geometrici

X ini.	Y ini.	Z ini.inf.	Z ini.sup.	H ini.	X fin.	Y fin.	Z fin.inf.	Z fin.sup	H fin.	Luce	Spessore	R. Trazione
-5.437	-3.169	4.12	5	0.88	-5.937	-3.169	4.12	5	0.88	0.5	0.28	30000

Caratteristiche del materiale

(Circolare 7 21-01-19 C8.5.I) Muratura in mattoni pieni e malta di calce LC2_Corti

fb_	fhk	fvk0	fhmedio	τ0	fv0	μ	ϕ	fvk,lim	E	G	FC
120000			172500	9000	20000	0.577	0.767	6500	320000000	128000000	1.2

Verifiche a pressoflessione delle travi in muratura in combinazioni non sismiche

Sezione	γM	N	M	Mu	Comb.	c.s.	Verifica
ini.	3	2102	487.01	1100.1	SLU 77	2.26	Si
fin.	3	-326	-647.59	1100.1	SLU 77	1.7	Si
ini.	3	1894	440.07	1100.1	SLU 78	2.5	Si
fin.	3	-250	-601.81	1100.1	SLU 78	1.83	Si
ini.	3	2059	473.19	1100.1	SLU 60	2.32	Si
fin.	3	-231	-601.68	1100.1	SLU 60	1.83	Si
ini.	3	2053	478.07	1100.1	SLU 79	2.3	Si
fin.	3	-351	-643.75	1100.1	SLU 79	1.71	Si
ini.	3	2189	505.17	1100.1	SLU 83	2.18	Si
fin.	3	-325	-668.7	1100.1	SLU 83	1.65	Si
ini.	3	1997	463.02	1100.1	SLU 62	2.38	Si
fin.	3	-294	-607.64	1100.1	SLU 62	1.81	Si
ini.	3	2252	515.35	1100.1	SLU 81	2.13	Si

Sezione	γM	N	M	Mu	Comb.	c.s.	Verifica
fin.	3	-262	-662.74	1100.1	SLU 81	1.66	Si
ini.	3	1982	458.24	1100.1	SLU 84	2.4	Si
fin.	3	-249	-622.92	1100.1	SLU 84	1.77	Si
ini.	3	2044	468.41	1100.1	SLU 82	2.35	Si
fin.	3	-186	-616.96	1100.1	SLU 82	1.78	Si
ini.	3	2164	497.18	1100.1	SLU 74	2.21	Si
fin.	3	-262	-641.63	1100.1	SLU 74	1.71	Si

Verifiche a taglio delle travi in muratura secondo §C8.7.1.3.1 in combinazioni non sismiche

Sezione	γM	N	M	V	Vt	Vp	Vt fess. diag.	Vt,lim	Comb.	c.s.	Verifica
ini.	3	1653	388.98	-408			949	0	SLU 59	0	No
fin.	3	-244	-536.91	-6836			1046	407	SLU 59	0.06	No
ini.	3	1972	455.03	-913			949	0	SLU 53	0	No
fin.	3	-231	-580.57	-7351			1041	404	SLU 53	0.05	No
ini.	3	1702	397.92	-418			949	0	SLU 57	0	No
fin.	3	-219	-540.75	-6921			1036	402	SLU 57	0.06	No
ini.	3	1861	435.91	-878			949	0	SLU 58	0	No
fin.	3	-320	-582.69	-7279			1077	421	SLU 58	0.06	No
ini.	3	1445	331.71	-686			949	0	SLU 1	0	No
fin.	3	-88	-399.69	-5111			984	376	SLU 1	0.07	No
ini.	3	2059	473.19	-952			949	0	SLU 60	0	No
fin.	3	-231	-601.68	-7630			1041	404	SLU 60	0.05	No
ini.	3	1764	408.09	-444			949	0	SLU 54	0	No
fin.	3	-155	-534.79	-6908			1011	389	SLU 54	0.06	No
ini.	3	1909	444.85	-888			949	0	SLU 56	0	No
fin.	3	-295	-586.53	-7364			1067	416	SLU 56	0.06	No
ini.	3	1851	426.26	-482			949	0	SLU 61	0	No
fin.	3	-154	-555.9	-7187			1011	389	SLU 61	0.05	No
ini.	3	1577	367.87	-120			949	0	SLU 55	0	No
fin.	3	-129	-500.43	-6529			1001	384	SLU 55	0.06	No

Verifiche a pressoflessione delle travi in muratura in combinazioni sismiche

Sezione	γM	N	M	Mu	Comb.	c.s.	Verifica
ini.	2	7232	1581.64	1650.16	SLV 2	1.04	Si
fin.	2	4294	-258.8	1650.16	SLV 2	6.38	Si
ini.	2	7064	1285.96	1650.16	SLV 4	1.28	Si
fin.	2	3572	-354.52	1650.16	SLV 4	4.65	Si
ini.	2	-412	-461.4	1650.16	SLV 12	3.58	Si
fin.	2	-2542	-636.59	1650.16	SLV 12	2.59	Si
ini.	2	-4134	-871.56	1650.16	SLV 15	1.89	Si
fin.	2	-4538	-616.67	1650.16	SLV 15	2.68	Si
ini.	2	3510	1171.48	1650.16	SLV 6	1.41	Si
fin.	2	2298	-238.89	1650.16	SLV 6	6.91	Si
ini.	2	-412	-461.4	1650.16	SLV 11	3.58	Si
fin.	2	-2542	-636.59	1650.16	SLV 11	2.59	Si
ini.	2	7232	1581.64	1650.16	SLV 1	1.04	Si
fin.	2	4294	-258.8	1650.16	SLV 1	6.38	Si
ini.	2	7064	1285.96	1650.16	SLV 3	1.28	Si
fin.	2	3572	-354.52	1650.16	SLV 3	4.65	Si
ini.	2	3510	1171.48	1650.16	SLV 5	1.41	Si
fin.	2	2298	-238.89	1650.16	SLV 5	6.91	Si
ini.	2	-4134	-871.56	1650.16	SLV 16	1.89	Si
fin.	2	-4538	-616.67	1650.16	SLV 16	2.68	Si

Verifiche a taglio delle travi in muratura secondo §C8.7.1.3.1 in combinazioni sismiche

Sezione	γM	N	M	V	Vt	Vp	Vt fess. diag.	Vt,lim	Comb.	c.s.	Verifica
ini.	2	7064	1285.96	-5078			1423	0	SLV 3	0	No
fin.	2	3572	-354.52	-8281			1423	0	SLV 3	0	No
ini.	2	7064	1285.96	-5078			1423	0	SLV 4	0	No
fin.	2	3572	-354.52	-8281			1423	0	SLV 4	0	No
ini.	2	3510	1171.48	286			1423	0	SLV 6	0	No
fin.	2	2298	-238.89	-7802			1423	0	SLV 6	0	No
ini.	2	3510	1171.48	286			1423	0	SLV 5	0	No
fin.	2	2298	-238.89	-7802			1423	0	SLV 5	0	No
ini.	2	7232	1581.64	-3806			1423	0	SLV 1	0	No
fin.	2	4294	-258.8	-9057			1423	0	SLV 1	0	No
ini.	2	151	524.22	2522			1423	502	SLV 10	0.2	No
fin.	2	-135	-317.53	-5950			1478	564	SLV 10	0.09	No
ini.	2	151	524.22	2522			1423	502	SLV 9	0.2	No
fin.	2	-135	-317.53	-5950			1478	564	SLV 9	0.09	No
ini.	2	7232	1581.64	-3806			1423	0	SLV 2	0	No
fin.	2	4294	-258.8	-9057			1423	0	SLV 2	0	No
ini.	2	2947	185.86	-3955			1423	0	SLV 7	0	No
fin.	2	-109	-557.94	-5216			1467	559	SLV 7	0.11	No
ini.	2	2947	185.86	-3955			1423	0	SLV 8	0	No
fin.	2	-109	-557.94	-5216			1467	559	SLV 8	0.11	No

Tabella dei coefficienti di sicurezza minimi

Stato limite	Coeff.s.	Comb.	Verifica
PF_SLV	1.043	SLV 1	Si
V_SLV	0	SLV 1	No
PF_SLU	1.645	SLU 83	Si
V_SLU	0	SLU 1	No

Trave di accoppiamento 64

Verifiche condotte secondo D.M. 17-01-18 (N.T.C.)

Dati geometrici

X ini.	Y ini.	Z ini.inf.	Z ini.sup.	H ini.	X fin.	Y fin.	Z fin.inf.	Z fin.sup	H fin.	Luce	Spessore	R. Trazione
-1.952	-3.169	1.32	2.22	0.9	-2.952	-3.169	1.32	2.22	0.9	1	0.28	30000

Caratteristiche del materiale

(Circolare 7 21-01-19 C8.5.I) Muratura in mattoni pieni e malta di calce LC2_Corti

fb_	fhk	fvk0	fhmedio	τ0	fv0	μ	ϕ	fvk,lim	E	G	FC
120000			172500	9000	20000	0.577	0.767	6500	320000000	128000000	1.2

Verifiche a pressoflessione delle travi in muratura in combinazioni non sismiche

Sezione	γM	N	M	Mu	Comb.	c.s.	Verifica
ini.	3	8425	-79.45	1150.68	SLU 79	14.48	Si
fin.	3	8223	1057.09	1150.68	SLU 79	1.09	Si
ini.	3	6706	-116.67	1150.68	SLU 75	9.86	Si
fin.	3	6326	1014.37	1150.68	SLU 75	1.13	Si
ini.	3	6765	-128.68	1150.68	SLU 78	8.94	Si
fin.	3	6360	1034.18	1150.68	SLU 78	1.11	Si
ini.	3	8719	-79.01	1150.68	SLU 83	14.56	Si
fin.	3	8531	1083.32	1150.68	SLU 83	1.06	Si
ini.	3	6991	-131.42	1150.68	SLU 84	8.76	Si
fin.	3	6596	1055.06	1150.68	SLU 84	1.09	Si
ini.	3	8435	-64.27	1150.68	SLU 74	17.9	Si
fin.	3	8261	1042.63	1150.68	SLU 74	1.1	Si
ini.	3	8494	-76.27	1150.68	SLU 77	15.09	Si
fin.	3	8296	1062.43	1150.68	SLU 77	1.08	Si
ini.	3	8660	-67.01	1150.68	SLU 81	17.17	Si
fin.	3	8497	1063.51	1150.68	SLU 81	1.08	Si
ini.	3	6931	-119.41	1150.68	SLU 82	9.64	Si
fin.	3	6561	1035.26	1150.68	SLU 82	1.11	Si
ini.	3	6696	-131.85	1150.68	SLU 80	8.73	Si
fin.	3	6287	1028.83	1150.68	SLU 80	1.12	Si

Verifiche a taglio delle travi in muratura secondo §C8.7.1.3.1 in combinazioni non sismiche

Sezione	γM	N	M	V	Vt	Vp	Vt fess. diag.	Vt,lim	Comb.	c.s.	Verifica
ini.	3	6168	-100.72	706			873	0	SLU 61	0	No
fin.	3	5818	939.68	2220			873	0	SLU 61	0	No
ini.	3	7731	-57.58	929			873	0	SLU 56	0	No
fin.	3	7552	966.85	1819			873	0	SLU 56	0	No
ini.	3	5933	-113.16	737			873	0	SLU 59	0	No
fin.	3	5544	933.26	2222			873	0	SLU 59	0	No
ini.	3	5369	-12.44	601			873	0	SLU 1	0	No
fin.	3	5280	651.75	1189			873	0	SLU 1	0	No
ini.	3	6002	-109.99	733			873	0	SLU 57	0	No
fin.	3	5617	938.6	2231			873	0	SLU 57	0	No
ini.	3	4721	-136.1	569			873	0	SLU 55	0	No
fin.	3	4219	894.62	2446			873	0	SLU 55	0	No
ini.	3	5943	-97.98	695			873	0	SLU 54	0	No
fin.	3	5582	918.8	2180			873	0	SLU 54	0	No
ini.	3	7671	-45.58	891			873	0	SLU 53	0	No
fin.	3	7518	947.05	1768			873	0	SLU 53	0	No
ini.	3	7897	-48.32	903			873	0	SLU 60	0	No
fin.	3	7753	967.94	1808			873	0	SLU 60	0	No
ini.	3	7662	-60.76	934			873	0	SLU 58	0	No
fin.	3	7479	961.51	1810			873	0	SLU 58	0	No

Verifiche a pressoflessione delle travi in muratura in combinazioni sismiche

Sezione	γM	N	M	Mu	Comb.	c.s.	Verifica
ini.	2	12572	-2110.83	1726.01	SLV 16	0.82	No
fin.	2	9156	3224.09	1726.01	SLV 16	0.54	No
ini.	2	-927	2059.86	1726.01	SLV 1	0.84	No
fin.	2	2286	-1804.61	1726.01	SLV 1	0.96	No
ini.	2	19330	-256.47	1726.01	SLV 12	6.73	Si
fin.	2	20352	1526.51	1726.01	SLV 12	1.13	Si
ini.	2	6644	2320.04	1726.01	SLV 3	0.74	No
fin.	2	11253	-1763.42	1726.01	SLV 3	0.98	No
ini.	2	5001	-2371.02	1726.01	SLV 13	0.73	No
fin.	2	189	3182.91	1726.01	SLV 13	0.54	No
ini.	2	12572	-2110.83	1726.01	SLV 15	0.82	No
fin.	2	9156	3224.09	1726.01	SLV 15	0.54	No
ini.	2	-927	2059.86	1726.01	SLV 2	0.84	No
fin.	2	2286	-1804.61	1726.01	SLV 2	0.96	No
ini.	2	6644	2320.04	1726.01	SLV 4	0.74	No
fin.	2	11253	-1763.42	1726.01	SLV 4	0.98	No
ini.	2	5001	-2371.02	1726.01	SLV 14	0.73	No
fin.	2	189	3182.91	1726.01	SLV 14	0.54	No
ini.	2	19330	-256.47	1726.01	SLV 11	6.73	Si
fin.	2	20352	1526.51	1726.01	SLV 11	1.13	Si

Verifiche a taglio delle travi in muratura secondo §C8.7.1.3.1 in combinazioni sismiche

Sezione	γM	N	M	V	Vt	Vp	Vt fess. diag.	Vt,lim	Comb.	c.s.	Verifica
ini.	2	-927	2059.86	-4812			1644	649	SLV 2	0.13	No
fin.	2	2286	-1804.61	-3931			1310	0	SLV 2	0	No
ini.	2	19330	-256.47	2545			1310	0	SLV 11	0	No
fin.	2	20352	1526.51	658			1310	0	SLV 11	0	No
ini.	2	5001	-2371.02	5959			1310	0	SLV 14	0	No
fin.	2	189	3182.91	8027			1310	455	SLV 14	0.06	No
ini.	2	19330	-256.47	2545			1310	0	SLV 12	0	No
fin.	2	20352	1526.51	658			1310	0	SLV 12	0	No
ini.	2	6644	2320.04	-4648			1310	0	SLV 3	0	No

Sezione	γM	N	M	V	Vt	Vp	Vt fess. diag.	Vt,lim	Comb.	c.s.	Verifica
fin.	2	11253	-1763.42	-5400			1310	0	SLV 3	0	No
ini.	2	17552	1072.79	-687			1310	0	SLV 8	0	No
fin.	2	20981	30.26	-2929			1310	0	SLV 8	0	No
ini.	2	5001	-2371.02	5959			1310	0	SLV 13	0	No
fin.	2	189	3182.91	8027			1310	455	SLV 13	0.06	No
ini.	2	6644	2320.04	-4648			1310	0	SLV 4	0	No
fin.	2	11253	-1763.42	-5400			1310	0	SLV 4	0	No
ini.	2	17552	1072.79	-687			1310	0	SLV 7	0	No
fin.	2	20981	30.26	-2929			1310	0	SLV 7	0	No
ini.	2	-927	2059.86	-4812			1644	649	SLV 1	0.13	No
fin.	2	2286	-1804.61	-3931			1310	0	SLV 1	0	No

Tabella dei coefficienti di sicurezza minimi

Stato limite	Coeff.s.	Comb.	Verifica
PF_SLV	0.535	SLV 15	No
V_SLV	0	SLV 1	No
PF_SLU	1.062	SLU 83	Si
V_SLU	0	SLU 1	No

Trave di accoppiamento 65

Verifiche condotte secondo D.M. 17-01-18 (N.T.C.)

Dati geometrici

X ini.	Y ini.	Z ini.inf.	Z ini.sup.	H ini.	X fin.	Y fin.	Z fin.inf.	Z fin.sup	H fin.	Luce	Spessore	R. Trazione
-1.952	-3.169	4.12	5	0.88	-2.952	-3.169	4.12	5	0.88	1	0.28	30000

Caratteristiche del materiale

(Circolare 7 21-01-19 C8.5.I) Muratura in mattoni pieni e malta di calce LC2_Corti

fb_	fhk	fvk0	fhmedio	τ0	fv0	μ	ϕ	fvk,lim	E	G	FC
120000			172500	9000	20000	0.577	0.767	6500	320000000	128000000	1.2

Verifiche a pressoflessione delle travi in muratura in combinazioni non sismiche

Sezione	γM	N	M	Mu	Comb.	c.s.	Verifica
ini.	3	-4032	-689.25	1100.1	SLU 78	1.6	Si
fin.	3	-727	247.59	1100.1	SLU 78	4.44	Si
ini.	3	-4050	-687.99	1100.1	SLU 82	1.6	Si
fin.	3	-735	243.85	1100.1	SLU 82	4.51	Si
ini.	3	-3970	-676.41	1100.1	SLU 75	1.63	Si
fin.	3	-729	238.76	1100.1	SLU 75	4.61	Si
ini.	3	-4111	-700.83	1100.1	SLU 84	1.57	Si
fin.	3	-734	252.67	1100.1	SLU 84	4.35	Si
ini.	3	-4205	-689.51	1100.1	SLU 83	1.6	Si
fin.	3	-710	297.75	1100.1	SLU 83	3.69	Si
ini.	3	-4097	-673.26	1100.1	SLU 79	1.63	Si
fin.	3	-698	292.57	1100.1	SLU 79	3.76	Si
ini.	3	-4126	-677.92	1100.1	SLU 77	1.62	Si
fin.	3	-704	292.66	1100.1	SLU 77	3.76	Si
ini.	3	-4003	-684.58	1100.1	SLU 80	1.61	Si
fin.	3	-721	247.5	1100.1	SLU 80	4.44	Si
ini.	3	-4144	-676.67	1100.1	SLU 81	1.63	Si
fin.	3	-712	288.93	1100.1	SLU 81	3.81	Si
ini.	3	-3879	-679.29	1100.1	SLU 76	1.62	Si
fin.	3	-739	208.62	1100.1	SLU 76	5.27	Si

Verifiche a taglio delle travi in muratura secondo §C8.7.1.3.1 in combinazioni non sismiche

Sezione	γM	N	M	V	Vt	Vp	Vt fess. diag.	Vt,lim	Comb.	c.s.	Verifica
ini.	3	-4126	-677.92	5733			2287	771	SLU 77	0.13	No
fin.	3	-704	292.66	-72			1083	428	SLU 77	5.98	Si
ini.	3	-4111	-700.83	5948			2282	770	SLU 84	0.13	No
fin.	3	-734	252.67	-347			1093	432	SLU 84	1.25	Si
ini.	3	-3817	-666.45	5627			2179	747	SLU 73	0.13	No
fin.	3	-740	199.8	-507			1096	433	SLU 73	0.85	No
ini.	3	-3879	-679.29	5706			2200	752	SLU 76	0.13	No
fin.	3	-739	208.62	-474			1095	433	SLU 76	0.91	No
ini.	3	-4050	-687.99	5869			2261	765	SLU 82	0.13	No
fin.	3	-735	243.85	-380			1094	433	SLU 82	1.14	Si
ini.	3	-4205	-689.51	5891			2315	777	SLU 83	0.13	No
fin.	3	-710	297.75	-119			1085	429	SLU 83	3.6	Si
ini.	3	-4144	-676.67	5811			2294	773	SLU 81	0.13	No
fin.	3	-712	288.93	-152			1086	429	SLU 81	2.83	Si
ini.	3	-4032	-689.25	5790			2254	764	SLU 78	0.13	No
fin.	3	-727	247.59	-300			1091	431	SLU 78	1.44	Si
ini.	3	-3970	-676.41	5711			2232	759	SLU 75	0.13	No
fin.	3	-729	238.76	-332			1092	432	SLU 75	1.3	Si
ini.	3	-4003	-684.58	5747			2244	762	SLU 80	0.13	No
fin.	3	-721	247.5	-290			1089	431	SLU 80	1.49	Si

Verifiche a pressoflessione delle travi in muratura in combinazioni sismiche

Sezione	γM	N	M	Mu	Comb.	c.s.	Verifica
ini.	2	-8806	-1937.16	1650.16	SLV 13	0.85	No
fin.	2	2364	1471.23	1650.16	SLV 13	1.12	Si
ini.	2	1893	812.87	1650.16	SLV 2	2.03	Si
fin.	2	-4695	-1327.61	1650.16	SLV 2	1.24	Si
ini.	2	3235	1033.79	1650.16	SLV 4	1.6	Si
fin.	2	-3407	-1092.29	1650.16	SLV 4	1.51	Si

Sezione	γM	N	M	Mu	Comb.	c.s.	Verifica
ini.	2	-8806	-1937.16	1650.16	SLV 14	0.85	No
fin.	2	2364	1471.23	1650.16	SLV 14	1.12	Si
ini.	2	-6628	-1232.4	1650.16	SLV 9	1.34	Si
fin.	2	-1609	217.09	1650.16	SLV 9	7.6	Si
ini.	2	-7463	-1716.24	1650.16	SLV 15	0.96	No
fin.	2	3651	1706.55	1650.16	SLV 15	0.97	No
ini.	2	1893	812.87	1650.16	SLV 1	2.03	Si
fin.	2	-4695	-1327.61	1650.16	SLV 1	1.24	Si
ini.	2	3235	1033.79	1650.16	SLV 3	1.6	Si
fin.	2	-3407	-1092.29	1650.16	SLV 3	1.51	Si
ini.	2	-7463	-1716.24	1650.16	SLV 16	0.96	No
fin.	2	3651	1706.55	1650.16	SLV 16	0.97	No
ini.	2	-6628	-1232.4	1650.16	SLV 10	1.34	Si
fin.	2	-1609	217.09	1650.16	SLV 10	7.6	Si

Verifiche a taglio delle travi in muratura secondo §C8.7.1.3.1 in combinazioni sismiche

Sezione	γM	N	M	V	Vt	Vp	Vt fess. diag.	Vt,lim	Comb.	c.s.	Verifica
ini.	2	1893	812.87	-3008			1253	0	SLV 2	0	No
fin.	2	-4695	-1327.61	-7006			2905	1034	SLV 2	0.15	No
ini.	2	-2152	-495.99	4218			2010	781	SLV 11	0.19	No
fin.	2	2683	1001.49	3524			1253	0	SLV 11	0	No
ini.	2	-8806	-1937.16	11703			4352	1345	SLV 14	0.11	No
fin.	2	2364	1471.23	5899			1253	0	SLV 14	0	No
ini.	2	-7463	-1716.24	10625			3880	1252	SLV 15	0.12	No
fin.	2	3651	1706.55	6888			1253	0	SLV 15	0	No
ini.	2	3235	1033.79	-4086			1253	0	SLV 3	0	No
fin.	2	-3407	-1092.29	-6017			2452	915	SLV 3	0.15	No
ini.	2	-8806	-1937.16	11703			4352	1345	SLV 13	0.11	No
fin.	2	2364	1471.23	5899			1253	0	SLV 13	0	No
ini.	2	3235	1033.79	-4086			1253	0	SLV 4	0	No
fin.	2	-3407	-1092.29	-6017			2452	915	SLV 4	0.15	No
ini.	2	1893	812.87	-3008			1253	0	SLV 1	0	No
fin.	2	-4695	-1327.61	-7006			2905	1034	SLV 1	0.15	No
ini.	2	-7463	-1716.24	10625			3880	1252	SLV 16	0.12	No
fin.	2	3651	1706.55	6888			1253	0	SLV 16	0	No
ini.	2	-2152	-495.99	4218			2010	781	SLV 12	0.19	No
fin.	2	2683	1001.49	3524			1253	0	SLV 12	0	No

Tabella dei coefficienti di sicurezza minimi

Stato limite	Coeff.s.	Comb.	Verifica
PF_SLV	0.852	SLV 13	No
V_SLV	0	SLV 1	No
PF_SLU	1.57	SLU 84	Si
V_SLU	0.129	SLU 84	No

Trave di accoppiamento 66

Verifiche condotte secondo D.M. 17-01-18 (N.T.C.)

Dati geometrici

X ini.	Y ini.	Z ini.inf.	Z ini.sup.	H ini.	X fin.	Y fin.	Z fin.inf.	Z fin.sup	H fin.	Luce	Spessore	R. Trazione
-1.958	5.948	1.32	2.22	0.9	-2.958	5.948	1.32	2.22	0.9	1	0.28	30000

Caratteristiche del materiale

(Circolare 7 21-01-19 C8.5.I) Muratura in mattoni pieni e malta di calce LC2_Corti

fb_	fhk	fvk0	fhmedio	τ0	fv0	μ	ϕ	fvk,lim	E	G	FC
120000			172500	9000	20000	0.577	0.767	6500	320000000	128000000	1.2

Verifiche a pressoflessione delle travi in muratura in combinazioni non sismiche

Sezione	γM	N	M	Mu	Comb.	c.s.	Verifica
ini.	3	6780	-42.28	1150.68	SLU 77	27.22	Si
fin.	3	5680	1043.97	1150.68	SLU 77	1.1	Si
ini.	3	6685	-0.42	1150.68	SLU 82	2752.99	Si
fin.	3	5742	998.55	1150.68	SLU 82	1.15	Si
ini.	3	6529	-31.77	1150.68	SLU 76	36.22	Si
fin.	3	5531	1002.79	1150.68	SLU 76	1.15	Si
ini.	3	6738	-45.46	1150.68	SLU 79	25.31	Si
fin.	3	5635	1038.83	1150.68	SLU 79	1.11	Si
ini.	3	6646	-9.83	1150.68	SLU 74	117	Si
fin.	3	5643	1001.77	1150.68	SLU 74	1.15	Si
ini.	3	6735	-53.53	1150.68	SLU 78	21.5	Si
fin.	3	5639	1047.67	1150.68	SLU 78	1.1	Si
ini.	3	6693	-56.71	1150.68	SLU 80	20.29	Si
fin.	3	5595	1042.53	1150.68	SLU 80	1.1	Si
ini.	3	6819	-32.86	1150.68	SLU 84	35.02	Si
fin.	3	5779	1040.75	1150.68	SLU 84	1.11	Si
ini.	3	6864	-21.61	1150.68	SLU 83	53.25	Si
fin.	3	5819	1037.05	1150.68	SLU 83	1.11	Si
ini.	3	6601	-21.09	1150.68	SLU 75	54.57	Si
fin.	3	5603	1005.47	1150.68	SLU 75	1.14	Si

Verifiche a taglio delle travi in muratura secondo §C8.7.1.3.1 in combinazioni non sismiche

Sezione	γM	N	M	V	Vt	Vp	Vt fess. diag.	Vt,lim	Comb.	c.s.	Verifica
ini.	3	5996	5.85	769			873	0	SLU 54	0	No
fin.	3	5115	903.88	3222			873	0	SLU 54	0	No
ini.	3	6131	-26.59	866			873	0	SLU 57	0	No

Sezione	γM	N	M	V	Vt	Vp	Vt fess. diag.	Vt,lim	Comb.	c.s.	Verifica
fin.	3	5152	946.08	3377			873	0	SLU 57	0	No
ini.	3	6080	26.52	719			873	0	SLU 61	0	No
fin.	3	5254	896.96	3194			873	0	SLU 61	0	No
ini.	3	6088	-29.77	872			873	0	SLU 59	0	No
fin.	3	5107	940.94	3355			873	0	SLU 59	0	No
ini.	3	6175	-15.34	843			873	0	SLU 56	0	No
fin.	3	5193	942.38	3366			873	0	SLU 56	0	No
ini.	3	5924	-4.83	791			873	0	SLU 55	0	No
fin.	3	5043	901.2	3208			873	0	SLU 55	0	No
ini.	3	4204	43.98	464			873	0	SLU 1	0	No
fin.	3	3636	610.26	2164			873	0	SLU 1	0	No
ini.	3	6133	-18.52	850			873	0	SLU 58	0	No
fin.	3	5148	937.24	3344			873	0	SLU 58	0	No
ini.	3	6041	17.1	747			873	0	SLU 53	0	No
fin.	3	5156	900.18	3210			873	0	SLU 53	0	No
ini.	3	6125	37.77	697			873	0	SLU 60	0	No
fin.	3	5295	893.26	3183			873	0	SLU 60	0	No

Verifiche a pressoflessione delle travi in muratura in combinazioni sismiche

Sezione	γM	N	M	Mu	Comb.	c.s.	Verifica
ini.	2	10476	2240.57	1726.01	SLV 4	0.77	No
fin.	2	11819	-1180.17	1726.01	SLV 4	1.46	Si
ini.	2	10609	-1832.23	1726.01	SLV 16	0.94	No
fin.	2	7949	2935.55	1726.01	SLV 16	0.59	No
ini.	2	24546	-1.66	1726.01	SLV 11	1039.42	Si
fin.	2	23216	1988.43	1726.01	SLV 11	0.87	No
ini.	2	-1377	-2179.45	1726.01	SLV 14	0.79	No
fin.	2	-3975	2512.64	1726.01	SLV 14	0.69	No
ini.	2	-1509	1893.35	1726.01	SLV 1	0.91	No
fin.	2	-105	-1603.08	1726.01	SLV 1	1.08	Si
ini.	2	10476	2240.57	1726.01	SLV 3	0.77	No
fin.	2	11819	-1180.17	1726.01	SLV 3	1.46	Si
ini.	2	-1377	-2179.45	1726.01	SLV 13	0.79	No
fin.	2	-3975	2512.64	1726.01	SLV 13	0.69	No
ini.	2	24546	-1.66	1726.01	SLV 12	1039.42	Si
fin.	2	23216	1988.43	1726.01	SLV 12	0.87	No
ini.	2	-1509	1893.35	1726.01	SLV 2	0.91	No
fin.	2	-105	-1603.08	1726.01	SLV 2	1.08	Si
ini.	2	10609	-1832.23	1726.01	SLV 15	0.94	No
fin.	2	7949	2935.55	1726.01	SLV 15	0.59	No

Verifiche a taglio delle travi in muratura secondo §C8.7.1.3.1 in combinazioni sismiche

Sezione	γM	N	M	V	Vt	Vp	Vt fess. diag.	Vt,lim	Comb.	c.s.	Verifica
ini.	2	10476	2240.57	-4208			1310	0	SLV 4	0	No
fin.	2	11819	-1180.17	-3774			1310	0	SLV 4	0	No
ini.	2	24506	1220.18	195			1310	0	SLV 7	0	No
fin.	2	24377	753.72	2870			1310	0	SLV 7	0	No
ini.	2	10476	2240.57	-4208			1310	0	SLV 3	0	No
fin.	2	11819	-1180.17	-3774			1310	0	SLV 3	0	No
ini.	2	24546	-1.66	3250			1310	0	SLV 12	0	No
fin.	2	23216	1988.43	7020			1310	0	SLV 12	0	No
ini.	2	10609	-1832.23	5973			1310	0	SLV 16	0	No
fin.	2	7949	2935.55	10062			1310	0	SLV 16	0	No
ini.	2	24506	1220.18	195			1310	0	SLV 8	0	No
fin.	2	24377	753.72	2870			1310	0	SLV 8	0	No
ini.	2	10609	-1832.23	5973			1310	0	SLV 15	0	No
fin.	2	7949	2935.55	10062			1310	0	SLV 15	0	No
ini.	2	-1509	1893.35	-4928			1854	731	SLV 2	0.15	No
fin.	2	-105	-1603.08	-5318			1348	513	SLV 2	0.1	No
ini.	2	-1509	1893.35	-4928			1854	731	SLV 1	0.15	No
fin.	2	-105	-1603.08	-5318			1348	513	SLV 1	0.1	No
ini.	2	24546	-1.66	3250			1310	0	SLV 11	0	No
fin.	2	23216	1988.43	7020			1310	0	SLV 11	0	No

Tabella dei coefficienti di sicurezza minimi

Stato limite	Coeff.s.	Comb.	Verifica
PF_SLV	0.588	SLV 15	No
V_SLV	0	SLV 3	No
PF_SLU	1.098	SLU 78	Si
V_SLU	0	SLU 1	No

Trave di accoppiamento 67

Verifiche condotte secondo D.M. 17-01-18 (N.T.C.)

Dati geometrici

X ini.	Y ini.	Z ini.inf.	Z ini.sup.	H ini.	X fin.	Y fin.	Z fin.inf.	Z fin.sup	H fin.	Luce	Spessore	R. Trazione
-1.958	5.948	4.12	5	0.88	-2.958	5.948	4.12	5	0.88	1	0.28	30000

Caratteristiche del materiale

(Circolare 7 21-01-19 C8.5.I) Muratura in mattoni pieni e malta di calce LC2_Corti

fb_	fhk	fvk0	fhmedio	τ0	fv0	μ	ϕ	fvk,lim	E	G	FC
120000			172500	9000	20000	0.577	0.767	6500	320000000	128000000	1.2

Verifiche a pressoflessione delle travi in muratura in combinazioni non sismiche

Sezione	γM	N	M	Mu	Comb.	c.s.	Verifica

Sezione	γM	N	M	Mu	Comb.	c.s.	Verifica
ini.	3	-3133	-765.83	1100.1	SLU 75	1.44	Si
fin.	3	-1830	105.59	1100.1	SLU 75	10.42	Si
ini.	3	-3232	-795.38	1100.1	SLU 84	1.38	Si
fin.	3	-1865	115.22	1100.1	SLU 84	9.55	Si
ini.	3	-3245	-803.1	1100.1	SLU 79	1.37	Si
fin.	3	-1801	142.01	1100.1	SLU 79	7.75	Si
ini.	3	-3139	-764.43	1100.1	SLU 74	1.44	Si
fin.	3	-1847	100.72	1100.1	SLU 74	10.92	Si
ini.	3	-3113	-763.85	1100.1	SLU 76	1.44	Si
fin.	3	-1796	112.6	1100.1	SLU 76	9.77	Si
ini.	3	-3109	-753.79	1100.1	SLU 82	1.46	Si
fin.	3	-1889	77.69	1100.1	SLU 82	14.16	Si
ini.	3	-3239	-804.5	1100.1	SLU 80	1.37	Si
fin.	3	-1784	146.88	1100.1	SLU 80	7.49	Si
ini.	3	-3256	-807.42	1100.1	SLU 78	1.36	Si
fin.	3	-1806	143.12	1100.1	SLU 78	7.69	Si
ini.	3	-3262	-806.02	1100.1	SLU 77	1.36	Si
fin.	3	-1823	138.25	1100.1	SLU 77	7.96	Si
ini.	3	-3238	-793.98	1100.1	SLU 83	1.39	Si
fin.	3	-1883	110.35	1100.1	SLU 83	9.97	Si

Verifiche a taglio delle travi in muratura secondo §C8.7.1.3.1 in combinazioni non sismiche

Sezione	γM	N	M	V	Vt	Vp	Vt fess. diag.	Vt,lim	Comb.	c.s.	Verifica
ini.	3	-3133	-765.83	4166			1938	690	SLU 75	0.17	No
fin.	3	-1830	105.59	-794			1479	565	SLU 75	0.71	No
ini.	3	-3239	-804.5	4338			1975	699	SLU 80	0.16	No
fin.	3	-1784	146.88	-666			1463	560	SLU 80	0.84	No
ini.	3	-3256	-807.42	4355			1981	700	SLU 78	0.16	No
fin.	3	-1806	143.12	-686			1471	562	SLU 78	0.82	No
ini.	3	-3238	-793.98	4345			1975	699	SLU 83	0.16	No
fin.	3	-1883	110.35	-834			1498	570	SLU 83	0.68	No
ini.	3	-3113	-763.85	4151			1931	688	SLU 76	0.17	No
fin.	3	-1796	112.6	-763			1467	561	SLU 76	0.73	No
ini.	3	-3109	-753.79	4159			1929	687	SLU 82	0.17	No
fin.	3	-1889	77.69	-926			1500	571	SLU 82	0.62	No
ini.	3	-3262	-806.02	4351			1983	701	SLU 77	0.16	No
fin.	3	-1823	138.25	-702			1477	564	SLU 77	0.8	No
ini.	3	-3116	-752.38	4155			1932	688	SLU 81	0.17	No
fin.	3	-1906	72.82	-942			1506	573	SLU 81	0.61	No
ini.	3	-3245	-803.1	4334			1977	699	SLU 79	0.16	No
fin.	3	-1801	142.01	-683			1469	561	SLU 79	0.82	No
ini.	3	-3232	-795.38	4348			1973	698	SLU 84	0.16	No
fin.	3	-1865	115.22	-818			1492	568	SLU 84	0.7	No

Verifiche a pressoflessione delle travi in muratura in combinazioni sismiche

Sezione	γM	N	M	Mu	Comb.	c.s.	Verifica
ini.	2	-5567	-1609.58	1650.16	SLV 12	1.03	Si
fin.	2	-3777	316.91	1650.16	SLV 12	5.21	Si
ini.	2	2849	1347.48	1650.16	SLV 1	1.22	Si
fin.	2	-2584	-1740.13	1650.16	SLV 1	0.95	No
ini.	2	-7078	-2345.35	1650.16	SLV 15	0.7	No
fin.	2	-71	1819.48	1650.16	SLV 15	0.91	No
ini.	2	-5783	-1978.29	1650.16	SLV 14	0.83	No
fin.	2	1793	1988.74	1650.16	SLV 14	0.83	No
ini.	2	1554	980.42	1650.16	SLV 4	1.68	Si
fin.	2	-4448	-1909.39	1650.16	SLV 4	0.86	No
ini.	2	2849	1347.48	1650.16	SLV 2	1.22	Si
fin.	2	-2584	-1740.13	1650.16	SLV 2	0.95	No
ini.	2	-5567	-1609.58	1650.16	SLV 11	1.03	Si
fin.	2	-3777	316.91	1650.16	SLV 11	5.21	Si
ini.	2	-5783	-1978.29	1650.16	SLV 13	0.83	No
fin.	2	1793	1988.74	1650.16	SLV 13	0.83	No
ini.	2	-7078	-2345.35	1650.16	SLV 16	0.7	No
fin.	2	-71	1819.48	1650.16	SLV 16	0.91	No
ini.	2	1554	980.42	1650.16	SLV 3	1.68	Si
fin.	2	-4448	-1909.39	1650.16	SLV 3	0.86	No

Verifiche a taglio delle travi in muratura secondo §C8.7.1.3.1 in combinazioni sismiche

Sezione	γM	N	M	V	Vt	Vp	Vt fess. diag.	Vt,lim	Comb.	c.s.	Verifica
ini.	2	-5783	-1978.29	9025			3288	1125	SLV 13	0.12	No
fin.	2	1793	1988.74	5908			1253	0	SLV 13	0	No
ini.	2	-1251	-386.02	2449			1693	669	SLV 9	0.27	No
fin.	2	2436	881.11	3023			1253	0	SLV 9	0	No
ini.	2	1554	980.42	-3598			1253	0	SLV 4	0	No
fin.	2	-4448	-1909.39	-7169			2818	1012	SLV 4	0.14	No
ini.	2	1554	980.42	-3598			1253	0	SLV 3	0	No
fin.	2	-4448	-1909.39	-7169			2818	1012	SLV 3	0.14	No
ini.	2	-5783	-1978.29	9025			3288	1125	SLV 14	0.12	No
fin.	2	1793	1988.74	5908			1253	0	SLV 14	0	No
ini.	2	1339	611.71	-1765			1253	0	SLV 5	0	No
fin.	2	1122	-237.55	-566			1253	141	SLV 5	0.25	No
ini.	2	-1251	-386.02	2449			1693	669	SLV 10	0.27	No
fin.	2	2436	881.11	3023			1253	0	SLV 10	0	No
ini.	2	1339	611.71	-1765			1253	0	SLV 6	0	No
fin.	2	1122	-237.55	-566			1253	141	SLV 6	0.25	No
ini.	2	2849	1347.48	-5021			1253	0	SLV 1	0	No
fin.	2	-2584	-1740.13	-6053			2162	830	SLV 1	0.14	No
ini.	2	2849	1347.48	-5021			1253	0	SLV 2	0	No
fin.	2	-2584	-1740.13	-6053			2162	830	SLV 2	0.14	No

Tabella dei coefficienti di sicurezza minimi

Stato limite	Coeff.s.	Comb.	Verifica
PF_SLV	0.704	SLV 15	No
V_SLV	0	SLV 1	No
PF_SLU	1.362	SLU 78	Si
V_SLU	0.161	SLU 84	No

Trave di accoppiamento 68

Verifiche condotte secondo D.M. 17-01-18 (N.T.C.)

Dati geometrici

X ini.	Y ini.	Z ini.inf.	Z ini.sup.	H ini.	X fin.	Y fin.	Z fin.inf.	Z fin.sup	H fin.	Luce	Spessore	R. Trazione
-21.878	5.937	5	5.9	0.9	-22.878	5.937	5	5.9	0.9	1	0.28	30000

Caratteristiche del materiale

(Circolare 7 21-01-19 C8.5.I) Muratura in mattoni pieni e malta di calce LC2_Corti

fb_	fhk	fvk0	fhmedio	τ0	fv0	μ	ϕ	fvk,lim	E	G	FC
120000			172500	9000	20000	0.577	0.767	6500	320000000	128000000	1.2

Verifiche a pressoflessione delle travi in muratura in combinazioni non sismiche

Sezione	γM	N	M	Mu	Comb.	c.s.	Verifica
ini.	3	-1703	286.05	1150.68	SLU 78	4.02	Si
fin.	3	-816	104.19	1150.68	SLU 78	11.04	Si
ini.	3	-1691	283.45	1150.68	SLU 80	4.06	Si
fin.	3	-811	103.63	1150.68	SLU 80	11.1	Si
ini.	3	-1651	275.04	1150.68	SLU 82	4.18	Si
fin.	3	-775	105.81	1150.68	SLU 82	10.87	Si
ini.	3	-1696	285.19	1150.68	SLU 84	4.03	Si
fin.	3	-791	106.09	1150.68	SLU 84	10.85	Si
ini.	3	-1659	275.89	1150.68	SLU 75	4.17	Si
fin.	3	-800	103.91	1150.68	SLU 75	11.07	Si
ini.	3	-1646	275.27	1150.68	SLU 76	4.18	Si
fin.	3	-783	101.73	1150.68	SLU 76	11.31	Si
ini.	3	-1660	272.92	1150.68	SLU 74	4.22	Si
fin.	3	-818	106.35	1150.68	SLU 74	10.82	Si
ini.	3	-1692	280.47	1150.68	SLU 79	4.1	Si
fin.	3	-830	106.07	1150.68	SLU 79	10.85	Si
ini.	3	-1704	283.07	1150.68	SLU 77	4.06	Si
fin.	3	-835	106.62	1150.68	SLU 77	10.79	Si
ini.	3	-1697	282.22	1150.68	SLU 83	4.08	Si
fin.	3	-809	108.52	1150.68	SLU 83	10.6	Si

Verifiche a taglio delle travi in muratura secondo §C8.7.1.3.1 in combinazioni non sismiche

Sezione	γM	N	M	V	Vt	Vp	Vt fess. diag.	Vt,lim	Comb.	c.s.	Verifica
ini.	3	-1691	283.45	-2099			1482	571	SLU 80	0.27	No
fin.	3	-811	103.63	2401			1165	461	SLU 80	0.19	No
ini.	3	-1704	283.07	-2118			1487	572	SLU 77	0.27	No
fin.	3	-835	106.62	2457			1174	464	SLU 77	0.19	No
ini.	3	-1696	285.19	-2092			1484	571	SLU 84	0.27	No
fin.	3	-791	106.09	2360			1158	458	SLU 84	0.19	No
ini.	3	-1590	255.3	-1959			1446	559	SLU 69	0.29	No
fin.	3	-844	100.25	2387			1177	465	SLU 69	0.19	No
ini.	3	-1703	286.05	-2122			1487	572	SLU 78	0.27	No
fin.	3	-816	104.19	2427			1167	462	SLU 78	0.19	No
ini.	3	-1692	280.47	-2094			1483	571	SLU 79	0.27	No
fin.	3	-830	106.07	2432			1172	463	SLU 79	0.19	No
ini.	3	-1660	272.92	-2043			1471	567	SLU 74	0.28	No
fin.	3	-818	106.35	2386			1168	462	SLU 74	0.19	No
ini.	3	-1697	282.22	-2087			1484	571	SLU 83	0.27	No
fin.	3	-809	108.52	2391			1165	461	SLU 83	0.19	No
ini.	3	-1659	275.89	-2047			1471	567	SLU 75	0.28	No
fin.	3	-800	103.91	2355			1161	459	SLU 75	0.19	No
ini.	3	-1589	258.27	-1963			1445	559	SLU 70	0.28	No
fin.	3	-826	97.82	2356			1171	463	SLU 70	0.2	No

Verifiche a pressoflessione delle travi in muratura in combinazioni sismiche

Sezione	γM	N	M	Mu	Comb.	c.s.	Verifica
ini.	2	-5041	1976.7	1726.01	SLV 3	0.87	No
fin.	2	4095	-897.61	1726.01	SLV 3	1.92	Si
ini.	2	1824	-1123.98	1726.01	SLV 10	1.54	Si
fin.	2	-3868	626.47	1726.01	SLV 10	2.76	Si
ini.	2	1824	-1123.98	1726.01	SLV 9	1.54	Si
fin.	2	-3868	626.47	1726.01	SLV 9	2.76	Si
ini.	2	-3850	1471.99	1726.01	SLV 2	1.17	Si
fin.	2	2883	-727.82	1726.01	SLV 2	2.37	Si
ini.	2	-5041	1976.7	1726.01	SLV 4	0.87	No
fin.	2	4095	-897.61	1726.01	SLV 4	1.92	Si
ini.	2	-4123	1484.77	1726.01	SLV 8	1.16	Si
fin.	2	2637	-473.13	1726.01	SLV 8	3.65	Si
ini.	2	-3850	1471.99	1726.01	SLV 1	1.17	Si
fin.	2	2883	-727.82	1726.01	SLV 1	2.37	Si
ini.	2	-4123	1484.77	1726.01	SLV 7	1.16	Si
fin.	2	2637	-473.13	1726.01	SLV 7	3.65	Si
ini.	2	2742	-1615.91	1726.01	SLV 13	1.07	Si
fin.	2	-5326	1050.96	1726.01	SLV 13	1.64	Si
ini.	2	2742	-1615.91	1726.01	SLV 14	1.07	Si

Sezione	γM	N	M	Mu	Comb.	c.s.	Verifica
fin.	2	-5326	1050.96	1726.01	SLV 14	1.64	Si

Verifiche a taglio delle travi in muratura secondo §C8.7.1.3.1 in combinazioni sismiche

Sezione	γM	N	M	V	Vt	Vp	Vt fess. diag.	Vt,lim	Comb.	c.s.	Verifica
ini.	2	1824	-1123.98	2256			1310	0	SLV 9	0	No
fin.	2	-3868	626.47	587			2702	995	SLV 9	1.69	Si
ini.	2	2742	-1615.91	5718			1310	0	SLV 14	0	No
fin.	2	-5326	1050.96	5666			3227	1127	SLV 14	0.2	No
ini.	2	-5041	1976.7	-8476			3125	1103	SLV 3	0.13	No
fin.	2	4095	-897.61	-2264			1310	0	SLV 3	0	No
ini.	2	-4123	1484.77	-5013			2794	1019	SLV 8	0.2	No
fin.	2	2637	-473.13	2815			1310	0	SLV 8	0	No
ini.	2	-5041	1976.7	-8476			3125	1103	SLV 4	0.13	No
fin.	2	4095	-897.61	-2264			1310	0	SLV 4	0	No
ini.	2	2742	-1615.91	5718			1310	0	SLV 13	0	No
fin.	2	-5326	1050.96	5666			3227	1127	SLV 13	0.2	No
ini.	2	-3850	1471.99	-7483			2696	993	SLV 1	0.13	No
fin.	2	2883	-727.82	-3782			1310	0	SLV 1	0	No
ini.	2	1824	-1123.98	2256			1310	0	SLV 10	0	No
fin.	2	-3868	626.47	587			2702	995	SLV 10	1.69	Si
ini.	2	-4123	1484.77	-5013			2794	1019	SLV 7	0.2	No
fin.	2	2637	-473.13	2815			1310	0	SLV 7	0	No
ini.	2	-3850	1471.99	-7483			2696	993	SLV 2	0.13	No
fin.	2	2883	-727.82	-3782			1310	0	SLV 2	0	No

Tabella dei coefficienti di sicurezza minimi

Stato limite	Coeff.s.	Comb.	Verifica
PF_SLV	0.873	SLV 3	No
V_SLV	0	SLV 1	No
PF_SLU	4.023	SLU 78	Si
V_SLU	0.189	SLU 77	No

Trave di accoppiamento 69

Verifiche condotte secondo D.M. 17-01-18 (N.T.C.)

Dati geometrici

X ini.	Y ini.	Z ini.inf.	Z ini.sup.	H ini.	X fin.	Y fin.	Z fin.inf.	Z fin.sup	H fin.	Luce	Spessore	R. Trazione
-21.878	5.937	7.8	8.55	0.75	-22.878	5.937	7.8	8.55	0.75	1	0.28	30000

Caratteristiche del materiale

(Circolare 7 21-01-19 C8.5.I) Muratura in mattoni pieni e malta di calce LC2_Corti

fb_	fhk	fvk0	fhmedio	τ0	fv0	μ	ϕ	fvk,lim	E	G	FC
120000			172500	9000	20000	0.577	0.767	6500	320000000	128000000	1.2

Verifiche a pressoflessione delle travi in muratura in combinazioni non sismiche

Sezione	γM	N	M	Mu	Comb.	c.s.	Verifica
ini.	3	39	-124.86	799.08	SLU 79	6.4	Si
fin.	3	-613	-152.45	799.08	SLU 79	5.24	Si
ini.	3	42	-123.64	799.08	SLU 84	6.46	Si
fin.	3	-654	-154.86	799.08	SLU 84	5.16	Si
ini.	3	33	-124.91	799.08	SLU 74	6.4	Si
fin.	3	-598	-148.01	799.08	SLU 74	5.4	Si
ini.	3	43	-121.21	799.08	SLU 75	6.59	Si
fin.	3	-611	-149.88	799.08	SLU 75	5.33	Si
ini.	3	49	-121.16	799.08	SLU 80	6.6	Si
fin.	3	-626	-154.31	799.08	SLU 80	5.18	Si
ini.	3	32	-127.35	799.08	SLU 83	6.27	Si
fin.	3	-641	-152.99	799.08	SLU 83	5.22	Si
ini.	3	54	-122.18	799.08	SLU 78	6.54	Si
fin.	3	-628	-156.08	799.08	SLU 78	5.12	Si
ini.	3	31	-122.67	799.08	SLU 82	6.51	Si
fin.	3	-638	-148.65	799.08	SLU 82	5.38	Si
ini.	3	44	-125.88	799.08	SLU 77	6.35	Si
fin.	3	-615	-154.22	799.08	SLU 77	5.18	Si
ini.	3	45	-117.72	799.08	SLU 76	6.79	Si
fin.	3	-619	-149.35	799.08	SLU 76	5.35	Si

Verifiche a taglio delle travi in muratura secondo §C8.7.1.3.1 in combinazioni non sismiche

Sezione	γM	N	M	V	Vt	Vp	Vt fess. diag.	Vt,lim	Comb.	c.s.	Verifica
ini.	3	54	-122.18	1734			607	219	SLU 78	0.13	No
fin.	3	-628	-156.08	-3694			795	314	SLU 78	0.09	No
ini.	3	33	-124.91	1722			607	223	SLU 74	0.13	No
fin.	3	-598	-148.01	-3589			786	311	SLU 74	0.09	No
ini.	3	42	-123.64	1762			607	221	SLU 84	0.13	No
fin.	3	-654	-154.86	-3745			803	318	SLU 84	0.08	No
ini.	3	43	-121.21	1705			607	221	SLU 75	0.13	No
fin.	3	-611	-149.88	-3597			790	312	SLU 75	0.09	No
ini.	3	49	-121.16	1720			607	220	SLU 80	0.13	No
fin.	3	-626	-154.31	-3662			794	314	SLU 80	0.09	No
ini.	3	39	-124.86	1737			607	222	SLU 79	0.13	No
fin.	3	-613	-152.45	-3654			791	313	SLU 79	0.09	No
ini.	3	31	-122.67	1734			607	223	SLU 82	0.13	No
fin.	3	-638	-148.65	-3648			798	316	SLU 82	0.09	No
ini.	3	32	-127.35	1780			607	223	SLU 83	0.13	No
fin.	3	-641	-152.99	-3737			799	316	SLU 83	0.08	No

Sezione	γM	N	M	V	Vt	Vp	Vt fess. diag.	Vt,lim	Comb.	c.s.	Verifica
ini.	3	21	-126.38	1751			607	225	SLU 81	0.13	No
fin.	3	-625	-146.79	-3640			794	314	SLU 81	0.09	No
ini.	3	44	-125.88	1751			607	221	SLU 77	0.13	No
fin.	3	-615	-154.22	-3686			791	313	SLU 77	0.08	No

Verifiche a pressoflessione delle travi in muratura in combinazioni sismiche

Sezione	γM	N	M	Mu	Comb.	c.s.	Verifica
ini.	2	-1948	-894.57	1198.62	SLV 10	1.34	Si
fin.	2	2573	468.54	1198.62	SLV 10	2.56	Si
ini.	2	-3233	-1278.9	1198.62	SLV 13	0.94	No
fin.	2	3757	753.3	1198.62	SLV 13	1.59	Si
ini.	2	3246	1101.26	1198.62	SLV 4	1.09	Si
fin.	2	-4509	-946.3	1198.62	SLV 4	1.27	Si
ini.	2	-2584	-983.03	1198.62	SLV 16	1.22	Si
fin.	2	2629	548.84	1198.62	SLV 16	2.18	Si
ini.	2	2598	805.4	1198.62	SLV 2	1.49	Si
fin.	2	-3382	-741.83	1198.62	SLV 2	1.62	Si
ini.	2	-1948	-894.57	1198.62	SLV 9	1.34	Si
fin.	2	2573	468.54	1198.62	SLV 9	2.56	Si
ini.	2	-2584	-983.03	1198.62	SLV 15	1.22	Si
fin.	2	2629	548.84	1198.62	SLV 15	2.18	Si
ini.	2	2598	805.4	1198.62	SLV 1	1.49	Si
fin.	2	-3382	-741.83	1198.62	SLV 1	1.62	Si
ini.	2	3246	1101.26	1198.62	SLV 3	1.09	Si
fin.	2	-4509	-946.3	1198.62	SLV 3	1.27	Si
ini.	2	-3233	-1278.9	1198.62	SLV 14	0.94	No
fin.	2	3757	753.3	1198.62	SLV 14	1.59	Si

Verifiche a taglio delle travi in muratura secondo §C8.7.1.3.1 in combinazioni sismiche

Sezione	γM	N	M	V	Vt	Vp	Vt fess. diag.	Vt,lim	Comb.	c.s.	Verifica
ini.	2	1961	716.93	-323			910	0	SLV 8	0	No
fin.	2	-3326	-661.54	-5833			1908	699	SLV 8	0.12	No
ini.	2	-1948	-894.57	2678			1494	579	SLV 9	0.22	No
fin.	2	2573	468.54	1095			910	0	SLV 9	0	No
ini.	2	1961	716.93	-323			910	0	SLV 7	0	No
fin.	2	-3326	-661.54	-5833			1908	699	SLV 7	0.12	No
ini.	2	2598	805.4	-2689			910	0	SLV 1	0	No
fin.	2	-3382	-741.83	-6972			1924	703	SLV 1	0.1	No
ini.	2	2598	805.4	-2689			910	0	SLV 2	0	No
fin.	2	-3382	-741.83	-6972			1924	703	SLV 2	0.1	No
ini.	2	3246	1101.26	-2877			910	0	SLV 3	0	No
fin.	2	-4509	-946.3	-8119			2263	788	SLV 3	0.1	No
ini.	2	-1948	-894.57	2678			1494	579	SLV 10	0.22	No
fin.	2	2573	468.54	1095			910	0	SLV 10	0	No
ini.	2	3246	1101.26	-2877			910	0	SLV 4	0	No
fin.	2	-4509	-946.3	-8119			2263	788	SLV 4	0.1	No
ini.	2	-3233	-1278.9	5232			1880	691	SLV 14	0.13	No
fin.	2	3757	753.3	3380			910	0	SLV 14	0	No
ini.	2	-3233	-1278.9	5232			1880	691	SLV 13	0.13	No
fin.	2	3757	753.3	3380			910	0	SLV 13	0	No

Tabella dei coefficienti di sicurezza minimi

Stato limite	Coeff.s.	Comb.	Verifica
PF_SLV	0.937	SLV 13	No
V_SLV	0	SLV 1	No
PF_SLU	5.12	SLU 78	Si
V_SLU	0.085	SLU 83	No

Trave di accoppiamento 70

Verifiche condotte secondo D.M. 17-01-18 (N.T.C.)

Dati geometrici

X ini.	Y ini.	Z ini.inf.	Z ini.sup.	H ini.	X fin.	Y fin.	Z fin.inf.	Z fin.sup	H fin.	Luce	Spessore	R. Trazione
-21.517	-3.183	5	5.9	0.9	-22.517	-3.183	5	5.9	0.9	1	0.28	30000

Caratteristiche del materiale

(Circolare 7 21-01-19 C8.5.I) Muratura in mattoni pieni e malta di calce LC2_Corti

fb_	fhk	fvk0	fhmedio	τ0	fv0	μ	ϕ	fvk,lim	E	G	FC
120000			172500	9000	20000	0.577	0.767	6500	320000000	128000000	1.2

Verifiche a pressoflessione delle travi in muratura in combinazioni non sismiche

Sezione	γM	N	M	Mu	Comb.	c.s.	Verifica
ini.	3	-3066	522.02	1150.68	SLU 81	2.2	Si
fin.	3	-1309	-152.49	1150.68	SLU 81	7.55	Si
ini.	3	-2957	489.6	1150.68	SLU 79	2.35	Si
fin.	3	-1401	-114.75	1150.68	SLU 79	10.03	Si
ini.	3	-2984	495.52	1150.68	SLU 77	2.32	Si
fin.	3	-1401	-118.47	1150.68	SLU 77	9.71	Si
ini.	3	-2850	491.15	1150.68	SLU 84	2.34	Si
fin.	3	-1205	-136.76	1150.68	SLU 84	8.41	Si
ini.	3	-2774	473.09	1150.68	SLU 75	2.43	Si
fin.	3	-1195	-126.84	1150.68	SLU 75	9.07	Si
ini.	3	-3063	517.8	1150.68	SLU 83	2.22	Si
fin.	3	-1360	-140.44	1150.68	SLU 83	8.19	Si
ini.	3	-2848	469.77	1150.68	SLU 62	2.45	Si

Sezione	γM	N	M	Mu	Comb.	c.s.	Verifica
fin.	3	-1308	-118.59	1150.68	SLU 62	9.7	Si
ini.	3	-2853	495.37	1150.68	SLU 82	2.32	Si
fin.	3	-1154	-148.81	1150.68	SLU 82	7.73	Si
ini.	3	-2987	499.74	1150.68	SLU 74	2.3	Si
fin.	3	-1350	-130.52	1150.68	SLU 74	8.82	Si
ini.	3	-2851	473.99	1150.68	SLU 60	2.43	Si
fin.	3	-1257	-130.64	1150.68	SLU 60	8.81	Si

Verifiche a taglio delle travi in muratura secondo §C8.7.1.3.1 in combinazioni non sismiche

Sezione	γM	N	M	V	Vt	Vp	Vt fess. diag.	Vt,lim	Comb.	c.s.	Verifica
ini.	3	-2850	491.15	-3706			1900	689	SLU 84	0.19	No
fin.	3	-1205	-136.76	29			1307	513	SLU 84	17.64	Si
ini.	3	-2364	393.45	-3359			1724	642	SLU 68	0.19	No
fin.	3	-1068	-88.86	312			1258	495	SLU 68	1.59	Si
ini.	3	-2366	397.67	-3379			1725	642	SLU 65	0.19	No
fin.	3	-1016	-100.91	254			1239	489	SLU 65	1.92	Si
ini.	3	-2608	453.62	-3695			1812	666	SLU 73	0.18	No
fin.	3	-1041	-132.72	142			1248	492	SLU 73	3.47	Si
ini.	3	-2771	468.87	-3611			1871	682	SLU 78	0.19	No
fin.	3	-1246	-114.79	136			1322	518	SLU 78	3.81	Si
ini.	3	-2392	405.59	-3407			1735	645	SLU 52	0.19	No
fin.	3	-988	-110.87	201			1229	485	SLU 52	2.41	Si
ini.	3	-2605	449.4	-3675			1811	666	SLU 76	0.18	No
fin.	3	-1092	-120.67	199			1266	498	SLU 76	2.51	Si
ini.	3	-2774	473.09	-3631			1872	682	SLU 75	0.19	No
fin.	3	-1195	-126.84	78			1304	512	SLU 75	6.53	Si
ini.	3	-2853	495.37	-3726			1901	689	SLU 82	0.18	No
fin.	3	-1154	-148.81	-28			1289	506	SLU 82	17.87	Si
ini.	3	-2389	401.37	-3387			1734	644	SLU 55	0.19	No
fin.	3	-1039	-98.82	259			1248	492	SLU 55	1.9	Si

Verifiche a pressoflessione delle travi in muratura in combinazioni sismiche

Sezione	γM	N	M	Mu	Comb.	c.s.	Verifica
ini.	2	-3285	764.17	1726.01	SLV 7	2.26	Si
fin.	2	794	-605.67	1726.01	SLV 7	2.85	Si
ini.	2	-7281	1243.2	1726.01	SLV 3	1.39	Si
fin.	2	2294	-1442.51	1726.01	SLV 3	1.2	Si
ini.	2	-7532	1144.72	1726.01	SLV 2	1.51	Si
fin.	2	1774	-1368.48	1726.01	SLV 2	1.26	Si
ini.	2	3051	-552.2	1726.01	SLV 13	3.13	Si
fin.	2	-4246	1269.26	1726.01	SLV 13	1.36	Si
ini.	2	3302	-453.72	1726.01	SLV 16	3.8	Si
fin.	2	-3726	1195.23	1726.01	SLV 16	1.44	Si
ini.	2	-7281	1243.2	1726.01	SLV 4	1.39	Si
fin.	2	2294	-1442.51	1726.01	SLV 4	1.2	Si
ini.	2	3302	-453.72	1726.01	SLV 15	3.8	Si
fin.	2	-3726	1195.23	1726.01	SLV 15	1.44	Si
ini.	2	-3285	764.17	1726.01	SLV 8	2.26	Si
fin.	2	794	-605.67	1726.01	SLV 8	2.85	Si
ini.	2	-7532	1144.72	1726.01	SLV 1	1.51	Si
fin.	2	1774	-1368.48	1726.01	SLV 1	1.26	Si
ini.	2	3051	-552.2	1726.01	SLV 14	3.13	Si
fin.	2	-4246	1269.26	1726.01	SLV 14	1.36	Si

Verifiche a taglio delle travi in muratura secondo §C8.7.1.3.1 in combinazioni sismiche

Sezione	γM	N	M	V	Vt	Vp	Vt fess. diag.	Vt,lim	Comb.	c.s.	Verifica
ini.	2	3302	-453.72	4099			1310	0	SLV 16	0	No
fin.	2	-3726	1195.23	5285			2651	981	SLV 16	0.19	No
ini.	2	3051	-552.2	2983			1310	0	SLV 13	0	No
fin.	2	-4246	1269.26	5957			2839	1031	SLV 13	0.17	No
ini.	2	-7532	1144.72	-8953			4021	1302	SLV 1	0.15	No
fin.	2	1774	-1368.48	-5400			1310	0	SLV 1	0	No
ini.	2	-3285	764.17	-2356			2493	936	SLV 7	0.4	No
fin.	2	794	-605.67	-2881			1310	300	SLV 7	0.1	No
ini.	2	-3285	764.17	-2356			2493	936	SLV 8	0.4	No
fin.	2	794	-605.67	-2881			1310	300	SLV 8	0.1	No
ini.	2	3051	-552.2	2983			1310	0	SLV 14	0	No
fin.	2	-4246	1269.26	5957			2839	1031	SLV 14	0.17	No
ini.	2	3302	-453.72	4099			1310	0	SLV 15	0	No
fin.	2	-3726	1195.23	5285			2651	981	SLV 15	0.19	No
ini.	2	-7281	1243.2	-7836			3931	1284	SLV 3	0.16	No
fin.	2	2294	-1442.51	-6072			1310	0	SLV 3	0	No
ini.	2	-7281	1243.2	-7836			3931	1284	SLV 4	0.16	No
fin.	2	2294	-1442.51	-6072			1310	0	SLV 4	0	No
ini.	2	-7532	1144.72	-8953			4021	1302	SLV 2	0.15	No
fin.	2	1774	-1368.48	-5400			1310	0	SLV 2	0	No

Tabella dei coefficienti di sicurezza minimi

Stato limite	Coeff.s.	Comb.	Verifica
PF_SLV	1.197	SLV 3	Si
V_SLV	0	SLV 1	No
PF_SLU	2.204	SLU 81	Si
V_SLU	0.18	SLU 73	No

Trave di accoppiamento 71

Verifiche condotte secondo D.M. 17-01-18 (N.T.C.)

Dati geometrici

X ini.	Y ini.	Z ini.inf.	Z ini.sup.	H ini.	X fin.	Y fin.	Z fin.inf.	Z fin.sup	H fin.	Luce	Spessore	R. Trazione
-21.517	-3.183	7.8	8.55	0.75	-22.517	-3.183	7.8	8.55	0.75	1	0.28	30000

Caratteristiche del materiale

(Circolare 7 21-01-19 C8.5.I) Muratura in mattoni pieni e malta di calce LC2_Corti

fb_	fhk	fvk0	fhmedio	τ0	fv0	μ	ϕ	fvk,lim	E	G	FC
120000			172500	9000	20000	0.577	0.767	6500	320000000	128000000	1.2

Verifiche a pressoflessione delle travi in muratura in combinazioni non sismiche

Sezione	γM	N	M	Mu	Comb.	c.s.	Verifica
ini.	3	-627	-62.46	799.08	SLU 79	12.79	Si
fin.	3	-1735	-431.74	799.08	SLU 79	1.85	Si
ini.	3	-425	-49.76	799.08	SLU 75	16.06	Si
fin.	3	-1588	-429.28	799.08	SLU 75	1.86	Si
ini.	3	-603	-62.15	799.08	SLU 77	12.86	Si
fin.	3	-1749	-439.31	799.08	SLU 77	1.82	Si
ini.	3	-482	-57.62	799.08	SLU 78	13.87	Si
fin.	3	-1575	-421.93	799.08	SLU 78	1.89	Si
ini.	3	-573	-51.82	799.08	SLU 83	15.42	Si
fin.	3	-1840	-463.96	799.08	SLU 83	1.72	Si
ini.	3	-516	-43.96	799.08	SLU 81	18.18	Si
fin.	3	-1853	-471.32	799.08	SLU 81	1.7	Si
ini.	3	-546	-54.29	799.08	SLU 74	14.72	Si
fin.	3	-1762	-446.66	799.08	SLU 74	1.79	Si
ini.	3	-492	-45.29	799.08	SLU 60	17.64	Si
fin.	3	-1672	-422.93	799.08	SLU 60	1.89	Si
ini.	3	-395	-39.44	799.08	SLU 82	20.26	Si
fin.	3	-1679	-453.94	799.08	SLU 82	1.76	Si
ini.	3	-452	-47.29	799.08	SLU 84	16.9	Si
fin.	3	-1665	-446.58	799.08	SLU 84	1.79	Si

Verifiche a taglio delle travi in muratura secondo §C8.7.1.3.1 in combinazioni non sismiche

Sezione	γM	N	M	V	Vt	Vp	Vt fess. diag.	Vt,lim	Comb.	c.s.	Verifica
ini.	3	-573	-51.82	2361			778	308	SLU 83	0.13	No
fin.	3	-1840	-463.96	-3266			1158	435	SLU 83	0.13	No
ini.	3	-425	-49.76	2339			734	289	SLU 75	0.12	No
fin.	3	-1588	-429.28	-3119			1083	413	SLU 75	0.13	No
ini.	3	-311	-39.19	2293			700	274	SLU 73	0.12	No
fin.	3	-1472	-417.48	-3081			1048	402	SLU 73	0.13	No
ini.	3	-506	-57.93	2372			758	300	SLU 80	0.13	No
fin.	3	-1561	-414.36	-3038			1075	410	SLU 80	0.14	No
ini.	3	-482	-57.62	2395			751	297	SLU 78	0.12	No
fin.	3	-1575	-421.93	-3088			1079	411	SLU 78	0.13	No
ini.	3	-516	-43.96	2305			761	301	SLU 81	0.13	No
fin.	3	-1853	-471.32	-3297			1162	436	SLU 81	0.13	No
ini.	3	-395	-39.44	2355			725	285	SLU 82	0.12	No
fin.	3	-1679	-453.94	-3269			1110	421	SLU 82	0.13	No
ini.	3	-368	-47.05	2349			717	282	SLU 76	0.12	No
fin.	3	-1458	-410.13	-3050			1044	401	SLU 76	0.13	No
ini.	3	-287	-40.52	2072			693	271	SLU 52	0.13	No
fin.	3	-1291	-369.09	-2745			994	385	SLU 52	0.14	No
ini.	3	-452	-47.29	2412			742	293	SLU 84	0.12	No
fin.	3	-1665	-446.58	-3238			1106	420	SLU 84	0.13	No

Verifiche a pressoflessione delle travi in muratura in combinazioni sismiche

Sezione	γM	N	M	Mu	Comb.	c.s.	Verifica
ini.	2	-3491	-611.69	1198.62	SLV 15	1.96	Si
fin.	2	1540	601.29	1198.62	SLV 15	1.99	Si
ini.	2	2718	532.95	1198.62	SLV 2	2.25	Si
fin.	2	-3965	-1210.77	1198.62	SLV 2	0.99	No
ini.	2	3198	650.75	1198.62	SLV 3	1.84	Si
fin.	2	-4537	-1396.97	1198.62	SLV 3	0.86	No
ini.	2	-3972	-729.49	1198.62	SLV 13	1.64	Si
fin.	2	2112	787.5	1198.62	SLV 13	1.52	Si
ini.	2	1418	346.33	1198.62	SLV 8	3.46	Si
fin.	2	-3078	-914.83	1198.62	SLV 8	1.31	Si
ini.	2	3198	650.75	1198.62	SLV 4	1.84	Si
fin.	2	-4537	-1396.97	1198.62	SLV 4	0.86	No
ini.	2	2718	532.95	1198.62	SLV 1	2.25	Si
fin.	2	-3965	-1210.77	1198.62	SLV 1	0.99	No
ini.	2	-3491	-611.69	1198.62	SLV 16	1.96	Si
fin.	2	1540	601.29	1198.62	SLV 16	1.99	Si
ini.	2	1418	346.33	1198.62	SLV 7	3.46	Si
fin.	2	-3078	-914.83	1198.62	SLV 7	1.31	Si
ini.	2	-3972	-729.49	1198.62	SLV 14	1.64	Si
fin.	2	2112	787.5	1198.62	SLV 14	1.52	Si

Verifiche a taglio delle travi in muratura secondo §C8.7.1.3.1 in combinazioni sismiche

Sezione	γM	N	M	V	Vt	Vp	Vt fess. diag.	Vt,lim	Comb.	c.s.	Verifica
ini.	2	-3972	-729.49	6185			2101	749	SLV 13	0.12	No
fin.	2	2112	787.5	2029			910	0	SLV 13	0	No
ini.	2	2718	532.95	-2448			910	0	SLV 2	0	No
fin.	2	-3965	-1210.77	-6774			2099	748	SLV 2	0.11	No
ini.	2	-3972	-729.49	6185			2101	749	SLV 14	0.12	No
fin.	2	2112	787.5	2029			910	0	SLV 14	0	No
ini.	2	-3491	-611.69	5530			1957	712	SLV 15	0.13	No
fin.	2	1540	601.29	2492			910	0	SLV 15	0	No
ini.	2	2718	532.95	-2448			910	0	SLV 1	0	No

Sezione	γM	N	M	V	Vt	Vp	Vt fess. diag.	Vt,lim	Comb.	c.s.	Verifica
fin.	2	-3965	-1210.77	-6774			2099	748	SLV 1	0.11	No
ini.	2	3198	650.75	-3103			910	0	SLV 4	0	No
fin.	2	-4537	-1396.97	-6311			2271	790	SLV 4	0.13	No
ini.	2	-3491	-611.69	5530			1957	712	SLV 16	0.13	No
fin.	2	1540	601.29	2492			910	0	SLV 16	0	No
ini.	2	1418	346.33	-846			910	0	SLV 7	0	No
fin.	2	-3078	-914.83	-2690			1833	679	SLV 7	0.25	No
ini.	2	3198	650.75	-3103			910	0	SLV 3	0	No
fin.	2	-4537	-1396.97	-6311			2271	790	SLV 3	0.13	No
ini.	2	1418	346.33	-846			910	0	SLV 8	0	No
fin.	2	-3078	-914.83	-2690			1833	679	SLV 8	0.25	No

Tabella dei coefficienti di sicurezza minimi

Stato limite	Coeff.s.	Comb.	Verifica
PF_SLV	0.858	SLV 3	No
V_SLV	0	SLV 1	No
PF_SLU	1.695	SLU 81	Si
V_SLU	0.12	SLU 73	No

Trave di accoppiamento 72

Verifiche condotte secondo D.M. 17-01-18 (N.T.C.)

Dati geometrici

X ini.	Y ini.	Z ini.inf.	Z ini.sup.	H ini.	X fin.	Y fin.	Z fin.inf.	Z fin.sup	H fin.	Luce	Spessore	R. Trazione
-18.787	-3.183	5	7	2	-19.287	-3.183	5	7	2	0.5	0.28	30000

Caratteristiche del materiale

(Circolare 7 21-01-19 C8.5.I) Muratura in mattoni pieni e malta di calce LC2_Corti

fb_	fhk	fvk0	fhmedio	τ0	fv0	μ	ϕ	fvk,lim	E	G	FC
120000			172500	9000	20000	0.577	0.767	6500	320000000	128000000	1.2

Verifiche a pressoflessione delle travi in muratura in combinazioni non sismiche

Sezione	γM	N	M	Mu	Comb.	c.s.	Verifica
ini.	3	-427	864.63	5682.35	SLU 62	6.57	Si
fin.	3	-1886	939.11	5682.35	SLU 62	6.05	Si
ini.	3	-431	923.44	5682.35	SLU 74	6.15	Si
fin.	3	-1973	1012	5682.35	SLU 74	5.62	Si
ini.	3	-385	973.7	5682.35	SLU 83	5.84	Si
fin.	3	-1987	1055.72	5682.35	SLU 83	5.38	Si
ini.	3	-561	846.44	5682.35	SLU 78	6.71	Si
fin.	3	-1844	942.45	5682.35	SLU 78	6.03	Si
ini.	3	-470	895.73	5682.35	SLU 82	6.34	Si
fin.	3	-1795	973.79	5682.35	SLU 82	5.84	Si
ini.	3	-454	923.93	5682.35	SLU 77	6.15	Si
fin.	3	-2004	1018.19	5682.35	SLU 77	5.58	Si
ini.	3	-362	973.21	5682.35	SLU 81	5.84	Si
fin.	3	-1955	1049.53	5682.35	SLU 81	5.41	Si
ini.	3	-492	896.21	5682.35	SLU 84	6.34	Si
fin.	3	-1827	979.98	5682.35	SLU 84	5.8	Si
ini.	3	-448	916.41	5682.35	SLU 79	6.2	Si
fin.	3	-1985	1007.13	5682.35	SLU 79	5.64	Si
ini.	3	-539	845.96	5682.35	SLU 75	6.72	Si
fin.	3	-1813	936.26	5682.35	SLU 75	6.07	Si

Verifiche a taglio delle travi in muratura secondo §C8.7.1.3.1 in combinazioni non sismiche

Sezione	γM	N	M	V	Vt	Vp	Vt fess. diag.	Vt,lim	Comb.	c.s.	Verifica
ini.	3	-404	864.14	362			2318	895	SLU 60	2.47	Si
fin.	3	-1854	932.91	5388			2898	1146	SLU 60	0.21	No
ini.	3	-454	923.93	403			2338	905	SLU 77	2.25	Si
fin.	3	-2004	1018.19	5828			2958	1169	SLU 77	0.2	No
ini.	3	-492	896.21	-77			2354	912	SLU 84	11.82	Si
fin.	3	-1827	979.98	5447			2887	1142	SLU 84	0.21	No
ini.	3	-448	916.41	410			2336	904	SLU 79	2.21	Si
fin.	3	-1985	1007.13	5756			2951	1166	SLU 79	0.2	No
ini.	3	-362	973.21	430			2301	887	SLU 81	2.06	Si
fin.	3	-1955	1049.53	5899			2939	1161	SLU 81	0.2	No
ini.	3	-427	864.63	370			2327	900	SLU 62	2.43	Si
fin.	3	-1886	939.11	5435			2911	1151	SLU 62	0.21	No
ini.	3	-431	923.44	395			2329	900	SLU 74	2.28	Si
fin.	3	-1973	1012	5780			2946	1164	SLU 74	0.2	No
ini.	3	-561	846.44	-113			2381	926	SLU 78	8.23	Si
fin.	3	-1844	942.45	5328			2894	1144	SLU 78	0.21	No
ini.	3	-470	895.73	-85			2345	908	SLU 82	10.68	Si
fin.	3	-1795	973.79	5399			2875	1137	SLU 82	0.21	No
ini.	3	-385	973.7	438			2311	891	SLU 83	2.03	Si
fin.	3	-1987	1055.72	5947			2951	1166	SLU 83	0.2	No

Verifiche a pressoflessione delle travi in muratura in combinazioni sismiche

Sezione	γM	N	M	Mu	Comb.	c.s.	Verifica
ini.	2	1975	1887.03	8523.53	SLV 3	4.52	Si
fin.	2	1421	-1180.23	8523.53	SLV 3	7.22	Si
ini.	2	1765	1376.88	8523.53	SLV 11	6.19	Si
fin.	2	-380	1681.69	8523.53	SLV 11	5.07	Si
ini.	2	1765	1376.88	8523.53	SLV 12	6.19	Si
fin.	2	-380	1681.69	8523.53	SLV 12	5.07	Si

Sezione	γM	N	M	Mu	Comb.	c.s.	Verifica
ini.	2	2701	1951.26	8523.53	SLV 8	4.37	Si
fin.	2	1012	493.16	8523.53	SLV 8	17.28	Si
ini.	2	-2706	-656.99	8523.53	SLV 13	12.97	Si
fin.	2	-4260	2535.75	8523.53	SLV 13	3.36	Si
ini.	2	1975	1887.03	8523.53	SLV 4	4.52	Si
fin.	2	1421	-1180.23	8523.53	SLV 4	7.22	Si
ini.	2	-2706	-656.99	8523.53	SLV 14	12.97	Si
fin.	2	-4260	2535.75	8523.53	SLV 14	3.36	Si
ini.	2	-1147	-27.56	8523.53	SLV 15	309.3	Si
fin.	2	-3219	2781.55	8523.53	SLV 15	3.06	Si
ini.	2	2701	1951.26	8523.53	SLV 7	4.37	Si
fin.	2	1012	493.16	8523.53	SLV 7	17.28	Si
ini.	2	-1147	-27.56	8523.53	SLV 16	309.3	Si
fin.	2	-3219	2781.55	8523.53	SLV 16	3.06	Si

Verifiche a taglio delle travi in muratura secondo §C8.7.1.3.1 in combinazioni sismiche

Sezione	γM	N	M	V	Vt	Vp	Vt fess. diag.	Vt,lim	Comb.	c.s.	Verifica
ini.	2	1765	1376.88	4715			3235	740	SLV 11	0.16	No
fin.	2	-380	1681.69	6649			3387	1297	SLV 11	0.2	No
ini.	2	-2706	-656.99	8167			4317	1707	SLV 13	0.21	No
fin.	2	-4260	2535.75	11474			4939	1933	SLV 13	0.17	No
ini.	2	-2706	-656.99	8167			4317	1707	SLV 14	0.21	No
fin.	2	-4260	2535.75	11474			4939	1933	SLV 14	0.17	No
ini.	2	1975	1887.03	-7673			3235	661	SLV 4	0.09	No
fin.	2	1421	-1180.23	-3527			3235	854	SLV 4	0.24	No
ini.	2	-1147	-27.56	9318			3694	1445	SLV 16	0.16	No
fin.	2	-3219	2781.55	11708			4523	1785	SLV 16	0.15	No
ini.	2	-1147	-27.56	9318			3694	1445	SLV 15	0.16	No
fin.	2	-3219	2781.55	11708			4523	1785	SLV 15	0.15	No
ini.	2	1975	1887.03	-7673			3235	661	SLV 3	0.09	No
fin.	2	1421	-1180.23	-3527			3235	854	SLV 3	0.24	No
ini.	2	415	1257.6	-8824			3235	1123	SLV 2	0.13	No
fin.	2	380	-1426.03	-3761			3235	1132	SLV 2	0.3	No
ini.	2	1765	1376.88	4715			3235	740	SLV 12	0.16	No
fin.	2	-380	1681.69	6649			3387	1297	SLV 12	0.2	No
ini.	2	415	1257.6	-8824			3235	1123	SLV 1	0.13	No
fin.	2	380	-1426.03	-3761			3235	1132	SLV 1	0.3	No

Tabella dei coefficienti di sicurezza minimi

Stato limite	Coeff.s.	Comb.	Verifica
PF_SLV	3.064	SLV 15	Si
V_SLV	0.086	SLV 3	No
PF_SLU	5.382	SLU 83	Si
V_SLU	0.196	SLU 83	No

Trave di accoppiamento 73

Verifiche condotte secondo D.M. 17-01-18 (N.T.C.)

Dati geometrici

X ini.	Y ini.	Z ini.inf.	Z ini.sup.	H ini.	X fin.	Y fin.	Z fin.inf.	Z fin.sup	H fin.	Luce	Spessore	R. Trazione
-18.787	-3.183	7.8	8.55	0.75	-19.287	-3.183	7.8	8.55	0.75	0.5	0.28	30000

Caratteristiche del materiale

(Circolare 7 21-01-19 C8.5.I) Muratura in mattoni pieni e malta di calce LC2_Corti

fb_	fhk	fvk0	fhmedio	τ0	fv0	μ	ϕ	fvk,lim	E	G	FC
120000			172500	9000	20000	0.577	0.767	6500	320000000	128000000	1.2

Verifiche a pressoflessione delle travi in muratura in combinazioni non sismiche

Sezione	γM	N	M	Mu	Comb.	c.s.	Verifica
ini.	3	454	-32.56	799.08	SLU 66	24.54	Si
fin.	3	617	119.91	799.08	SLU 66	6.66	Si
ini.	3	394	-49.59	799.08	SLU 81	16.11	Si
fin.	3	634	128.04	799.08	SLU 81	6.24	Si
ini.	3	405	-46.34	799.08	SLU 77	17.24	Si
fin.	3	632	126.89	799.08	SLU 77	6.3	Si
ini.	3	438	-31.71	799.08	SLU 64	25.2	Si
fin.	3	593	117.24	799.08	SLU 64	6.82	Si
ini.	3	371	-46.76	799.08	SLU 79	17.09	Si
fin.	3	596	123.65	799.08	SLU 79	6.46	Si
ini.	3	376	-50.86	799.08	SLU 83	15.71	Si
fin.	3	621	127.46	799.08	SLU 83	6.27	Si
ini.	3	380	-42.93	799.08	SLU 60	18.61	Si
fin.	3	584	116.66	799.08	SLU 60	6.85	Si
ini.	3	402	-34.24	799.08	SLU 71	23.34	Si
fin.	3	567	116.09	799.08	SLU 71	6.88	Si
ini.	3	423	-45.08	799.08	SLU 74	17.73	Si
fin.	3	645	127.47	799.08	SLU 74	6.27	Si
ini.	3	436	-33.82	799.08	SLU 69	23.63	Si
fin.	3	604	119.34	799.08	SLU 69	6.7	Si

Verifiche a taglio delle travi in muratura secondo §C8.7.1.3.1 in combinazioni non sismiche

Sezione	γM	N	M	V	Vt	Vp	Vt fess. diag.	Vt,lim	Comb.	c.s.	Verifica
ini.	3	405	-46.34	2846			809	198	SLU 77	0.07	No
fin.	3	632	126.89	-1687			809	95	SLU 77	0.06	No
ini.	3	394	-49.59	2922			809	201	SLU 81	0.07	No

Sezione	γM	N	M	V	Vt	Vp	Vt fess. diag.	Vt,lim	Comb.	c.s.	Verifica
fin.	3	634	128.04	-1721			809	94	SLU 81	0.05	No
ini.	3	450	-29.41	2674			809	182	SLU 75	0.07	No
fin.	3	559	107.66	-1862			809	137	SLU 75	0.07	No
ini.	3	421	-33.93	2762			809	192	SLU 82	0.07	No
fin.	3	547	108.23	-1897			809	142	SLU 82	0.07	No
ini.	3	432	-30.68	2687			809	188	SLU 78	0.07	No
fin.	3	546	107.08	-1864			809	143	SLU 78	0.08	No
ini.	3	403	-35.19	2775			809	198	SLU 84	0.07	No
fin.	3	534	107.65	-1899			809	148	SLU 84	0.08	No
ini.	3	371	-46.76	2796			809	209	SLU 79	0.07	No
fin.	3	596	123.65	-1653			809	117	SLU 79	0.07	No
ini.	3	423	-45.08	2833			809	192	SLU 74	0.07	No
fin.	3	645	127.47	-1686			809	85	SLU 74	0.05	No
ini.	3	376	-50.86	2935			809	207	SLU 83	0.07	No
fin.	3	621	127.46	-1722			809	102	SLU 83	0.06	No
ini.	3	454	-32.56	2479			809	181	SLU 66	0.07	No
fin.	3	617	119.91	-1519			809	105	SLU 66	0.07	No

Verifiche a pressoflessione delle travi in muratura in combinazioni sismiche

Sezione	γM	N	M	Mu	Comb.	c.s.	Verifica
ini.	2	-3138	-158.27	1198.62	SLV 3	7.57	Si
fin.	2	-3841	-601.28	1198.62	SLV 3	1.99	Si
ini.	2	3095	-14.9	1198.62	SLV 16	80.44	Si
fin.	2	4960	832.34	1198.62	SLV 16	1.44	Si
ini.	2	3787	105.27	1198.62	SLV 14	11.39	Si
fin.	2	4748	780.97	1198.62	SLV 14	1.53	Si
ini.	2	106	-205.28	1198.62	SLV 12	5.84	Si
fin.	2	2127	390.51	1198.62	SLV 12	3.07	Si
ini.	2	-3138	-158.27	1198.62	SLV 4	7.57	Si
fin.	2	-3841	-601.28	1198.62	SLV 4	1.99	Si
ini.	2	106	-205.28	1198.62	SLV 11	5.84	Si
fin.	2	2127	390.51	1198.62	SLV 11	3.07	Si
ini.	2	3095	-14.9	1198.62	SLV 15	80.44	Si
fin.	2	4960	832.34	1198.62	SLV 15	1.44	Si
ini.	2	3787	105.27	1198.62	SLV 13	11.39	Si
fin.	2	4748	780.97	1198.62	SLV 13	1.53	Si
ini.	2	-2445	-38.11	1198.62	SLV 2	31.46	Si
fin.	2	-4053	-652.65	1198.62	SLV 2	1.84	Si
ini.	2	-2445	-38.11	1198.62	SLV 1	31.46	Si
fin.	2	-4053	-652.65	1198.62	SLV 1	1.84	Si

Verifiche a taglio delle travi in muratura secondo §C8.7.1.3.1 in combinazioni sismiche

Sezione	γM	N	M	V	Vt	Vp	Vt fess. diag.	Vt,lim	Comb.	c.s.	Verifica
ini.	2	3095	-14.9	4015			1213	0	SLV 15	0	No
fin.	2	4960	832.34	2187			1213	0	SLV 15	0	No
ini.	2	3787	105.27	3246			1213	0	SLV 14	0	No
fin.	2	4748	780.97	1268			1213	0	SLV 14	0	No
ini.	2	544	152.27	90			1213	317	SLV 6	3.51	Si
fin.	2	-1220	-210.82	-3548			1701	671	SLV 6	0.19	No
ini.	2	2414	195.28	1133			1213	0	SLV 10	0	No
fin.	2	1421	219.27	-1820			1213	0	SLV 10	0	No
ini.	2	3095	-14.9	4015			1213	0	SLV 16	0	No
fin.	2	4960	832.34	2187			1213	0	SLV 16	0	No
ini.	2	3787	105.27	3246			1213	0	SLV 13	0	No
fin.	2	4748	780.97	1268			1213	0	SLV 13	0	No
ini.	2	544	152.27	90			1213	317	SLV 5	3.51	Si
fin.	2	-1220	-210.82	-3548			1701	671	SLV 5	0.19	No
ini.	2	106	-205.28	3696			1213	433	SLV 12	0.12	No
fin.	2	2127	390.51	1242			1213	0	SLV 12	0	No
ini.	2	2414	195.28	1133			1213	0	SLV 9	0	No
fin.	2	1421	219.27	-1820			1213	0	SLV 9	0	No
ini.	2	106	-205.28	3696			1213	433	SLV 11	0.12	No
fin.	2	2127	390.51	1242			1213	0	SLV 11	0	No

Tabella dei coefficienti di sicurezza minimi

Stato limite	Coeff.s.	Comb.	Verifica
PF_SLV	1.44	SLV 15	Si
V_SLV	0	SLV 9	No
PF_SLU	6.241	SLU 81	Si
V_SLU	0.051	SLU 74	No

Trave di accoppiamento 74

Verifiche condotte secondo D.M. 17-01-18 (N.T.C.)

Dati geometrici

X ini.	Y ini.	Z ini.inf.	Z ini.sup.	H ini.	X fin.	Y fin.	Z fin.inf.	Z fin.sup	H fin.	Luce	Spessore	R. Trazione
-17.277	-3.183	5	5.9	0.9	-18.277	-3.183	5	5.9	0.9	1	0.28	30000

Caratteristiche del materiale

(Circolare 7 21-01-19 C8.5.I) Muratura in mattoni pieni e malta di calce LC2_Corti

fb_	fhk	fvk0	fhmedio	τ0	fv0	μ	ϕ	fvk,lim	E	G	FC
120000			172500	9000	20000	0.577	0.767	6500	320000000	128000000	1.2

Verifiche a pressoflessione delle travi in muratura in combinazioni non sismiche

Sezione	γM	N	M	Mu	Comb.	c.s.	Verifica

Sezione	γM	N	M	Mu	Comb.	c.s.	Verifica
ini.	3	644	-313.04	1150.68	SLU 83	3.68	Si
fin.	3	-194	666.05	1150.68	SLU 83	1.73	Si
ini.	3	514	-298.04	1150.68	SLU 78	3.86	Si
fin.	3	-359	658.71	1150.68	SLU 78	1.75	Si
ini.	3	623	-310.51	1150.68	SLU 77	3.71	Si
fin.	3	-253	668.46	1150.68	SLU 77	1.72	Si
ini.	3	660	-315.97	1150.68	SLU 81	3.64	Si
fin.	3	-174	661.19	1150.68	SLU 81	1.74	Si
ini.	3	488	-288.19	1150.68	SLU 80	3.99	Si
fin.	3	-358	647.96	1150.68	SLU 80	1.78	Si
ini.	3	551	-303.5	1150.68	SLU 82	3.79	Si
fin.	3	-280	651.44	1150.68	SLU 82	1.77	Si
ini.	3	639	-313.43	1150.68	SLU 74	3.67	Si
fin.	3	-233	663.61	1150.68	SLU 74	1.73	Si
ini.	3	535	-300.57	1150.68	SLU 84	3.83	Si
fin.	3	-300	656.29	1150.68	SLU 84	1.75	Si
ini.	3	597	-300.66	1150.68	SLU 79	3.83	Si
fin.	3	-252	657.71	1150.68	SLU 79	1.75	Si
ini.	3	530	-300.96	1150.68	SLU 75	3.82	Si
fin.	3	-339	653.86	1150.68	SLU 75	1.76	Si

Verifiche a taglio delle travi in muratura secondo §C8.7.1.3.1 in combinazioni non sismiche

Sezione	γM	N	M	V	Vt	Vp	Vt fess. diag.	Vt,lim	Comb.	c.s.	Verifica
ini.	3	530	-300.96	349			873	200	SLU 75	0.57	No
fin.	3	-339	653.86	2639			995	389	SLU 75	0.15	No
ini.	3	535	-300.57	325			873	198	SLU 84	0.61	No
fin.	3	-300	656.29	2637			981	383	SLU 84	0.15	No
ini.	3	565	-279.12	279			873	188	SLU 60	0.67	No
fin.	3	-217	612.69	2500			952	369	SLU 60	0.15	No
ini.	3	639	-313.43	339			873	161	SLU 74	0.48	No
fin.	3	-233	663.61	2707			957	371	SLU 74	0.14	No
ini.	3	660	-315.97	327			873	152	SLU 81	0.46	No
fin.	3	-174	661.19	2684			936	361	SLU 81	0.13	No
ini.	3	514	-298.04	336			873	205	SLU 78	0.61	No
fin.	3	-359	658.71	2660			1003	393	SLU 78	0.15	No
ini.	3	597	-300.66	311			873	177	SLU 79	0.57	No
fin.	3	-252	657.71	2674			964	375	SLU 79	0.14	No
ini.	3	551	-303.5	338			873	193	SLU 82	0.57	No
fin.	3	-280	651.44	2617			974	380	SLU 82	0.15	No
ini.	3	623	-310.51	326			873	167	SLU 77	0.51	No
fin.	3	-253	668.46	2728			964	375	SLU 77	0.14	No
ini.	3	644	-313.04	315			873	159	SLU 83	0.5	No
fin.	3	-194	666.05	2705			943	365	SLU 83	0.13	No

Verifiche a pressoflessione delle travi in muratura in combinazioni sismiche

Sezione	γM	N	M	Mu	Comb.	c.s.	Verifica
ini.	2	-2551	1538.8	1726.01	SLV 1	1.12	Si
fin.	2	1141	-709.41	1726.01	SLV 1	2.43	Si
ini.	2	3381	-2227.47	1726.01	SLV 13	0.77	No
fin.	2	-3058	2074.56	1726.01	SLV 13	0.83	No
ini.	2	-2526	1793.49	1726.01	SLV 3	0.96	No
fin.	2	2628	-1128.7	1726.01	SLV 3	1.53	Si
ini.	2	3381	-2227.47	1726.01	SLV 14	0.77	No
fin.	2	-3058	2074.56	1726.01	SLV 14	0.83	No
ini.	2	-2526	1793.49	1726.01	SLV 4	0.96	No
fin.	2	2628	-1128.7	1726.01	SLV 4	1.53	Si
ini.	2	3406	-1972.78	1726.01	SLV 15	0.87	No
fin.	2	-1571	1655.27	1726.01	SLV 15	1.04	Si
ini.	2	1275	-1206.42	1726.01	SLV 10	1.43	Si
fin.	2	-3323	1589.35	1726.01	SLV 10	1.09	Si
ini.	2	1275	-1206.42	1726.01	SLV 9	1.43	Si
fin.	2	-3323	1589.35	1726.01	SLV 9	1.09	Si
ini.	2	-2551	1538.8	1726.01	SLV 2	1.12	Si
fin.	2	1141	-709.41	1726.01	SLV 2	2.43	Si
ini.	2	3406	-1972.78	1726.01	SLV 16	0.87	No
fin.	2	-1571	1655.27	1726.01	SLV 16	1.04	Si

Verifiche a taglio delle travi in muratura secondo §C8.7.1.3.1 in combinazioni sismiche

Sezione	γM	N	M	V	Vt	Vp	Vt fess. diag.	Vt,lim	Comb.	c.s.	Verifica
ini.	2	-421	772.43	-3772			1462	569	SLV 7	0.15	No
fin.	2	2893	-643.48	-2510			1310	0	SLV 7	0	No
ini.	2	3381	-2227.47	7254			1310	0	SLV 13	0	No
fin.	2	-3058	2074.56	7810			2411	913	SLV 13	0.12	No
ini.	2	-2526	1793.49	-6742			2220	855	SLV 3	0.13	No
fin.	2	2628	-1128.7	-3957			1310	0	SLV 3	0	No
ini.	2	-421	772.43	-3772			1462	569	SLV 8	0.15	No
fin.	2	2893	-643.48	-2510			1310	0	SLV 8	0	No
ini.	2	1359	-357.45	45			1310	0	SLV 11	0	No
fin.	2	1633	191.71	491			1310	0	SLV 11	0	No
ini.	2	1275	-1206.42	4285			1310	0	SLV 10	0	No
fin.	2	-3323	1589.35	6363			2506	940	SLV 10	0.15	No
ini.	2	1359	-357.45	45			1310	0	SLV 12	0	No
fin.	2	1633	191.71	491			1310	0	SLV 12	0	No
ini.	2	-2526	1793.49	-6742			2220	855	SLV 4	0.13	No
fin.	2	2628	-1128.7	-3957			1310	0	SLV 4	0	No
ini.	2	3381	-2227.47	7254			1310	0	SLV 14	0	No
fin.	2	-3058	2074.56	7810			2411	913	SLV 14	0.12	No
ini.	2	1275	-1206.42	4285			1310	0	SLV 9	0	No
fin.	2	-3323	1589.35	6363			2506	940	SLV 9	0.15	No

Tabella dei coefficienti di sicurezza minimi

Stato limite	Coeff.s.	Comb.	Verifica
PF_SLV	0.775	SLV 13	No
V_SLV	0	SLV 3	No
PF_SLU	1.721	SLU 77	Si
V_SLU	0.135	SLU 81	No

Trave di accoppiamento 75

Verifiche condotte secondo D.M. 17-01-18 (N.T.C.)

Dati geometrici

X ini.	Y ini.	Z ini.inf.	Z ini.sup.	H ini.	X fin.	Y fin.	Z fin.inf.	Z fin.sup	H fin.	Luce	Spessore	R. Trazione
-17.277	-3.183	7.8	8.55	0.75	-18.277	-3.183	7.8	8.55	0.75	1	0.28	30000

Caratteristiche del materiale

(Circolare 7 21-01-19 C8.5.I) Muratura in mattoni pieni e malta di calce LC2_Corti

fb_	fhk	fvk0	fhmedio	τ0	fv0	μ	ϕ	fvk,lim	E	G	FC
120000			172500	9000	20000	0.577	0.767	6500	320000000	128000000	1.2

Verifiche a pressoflessione delle travi in muratura in combinazioni non sismiche

Sezione	γM	N	M	Mu	Comb.	c.s.	Verifica
ini.	3	-894	-175.17	799.08	SLU 69	4.56	Si
fin.	3	420	24.75	799.08	SLU 69	32.28	Si
ini.	3	-935	-173.62	799.08	SLU 70	4.6	Si
fin.	3	391	20.45	799.08	SLU 70	39.07	Si
ini.	3	-895	-172.66	799.08	SLU 71	4.63	Si
fin.	3	388	22.94	799.08	SLU 71	34.84	Si
ini.	3	-935	-171.11	799.08	SLU 72	4.67	Si
fin.	3	359	18.64	799.08	SLU 72	42.87	Si
ini.	3	-976	-170.34	799.08	SLU 78	4.69	Si
fin.	3	367	5.21	799.08	SLU 78	153.5	Si
ini.	3	-935	-169.38	799.08	SLU 79	4.72	Si
fin.	3	365	7.69	799.08	SLU 79	103.93	Si
ini.	3	-821	-169.41	799.08	SLU 48	4.72	Si
fin.	3	397	28.63	799.08	SLU 48	27.91	Si
ini.	3	-917	-170.37	799.08	SLU 67	4.69	Si
fin.	3	410	21.9	799.08	SLU 67	36.49	Si
ini.	3	-876	-171.93	799.08	SLU 66	4.65	Si
fin.	3	439	26.19	799.08	SLU 66	30.51	Si
ini.	3	-935	-171.89	799.08	SLU 77	4.65	Si
fin.	3	397	9.5	799.08	SLU 77	84.08	Si

Verifiche a taglio delle travi in muratura secondo §C8.7.1.3.1 in combinazioni non sismiche

Sezione	γM	N	M	V	Vt	Vp	Vt fess. diag.	Vt,lim	Comb.	c.s.	Verifica
ini.	3	-935	-171.89	2474			887	349	SLU 77	0.14	No
fin.	3	397	9.5	-1165			607	150	SLU 77	0.13	No
ini.	3	-967	-160.31	2368			897	352	SLU 73	0.15	No
fin.	3	355	3.41	-1114			607	160	SLU 73	0.14	No
ini.	3	-976	-163.18	2473			899	353	SLU 84	0.14	No
fin.	3	345	-1.7	-1230			607	163	SLU 84	0.13	No
ini.	3	-917	-161.49	2483			882	347	SLU 81	0.14	No
fin.	3	393	4.04	-1236			607	151	SLU 81	0.12	No
ini.	3	-935	-169.38	2436			887	349	SLU 79	0.14	No
fin.	3	365	7.69	-1157			607	158	SLU 79	0.14	No
ini.	3	-957	-159.94	2459			894	351	SLU 82	0.14	No
fin.	3	364	-0.26	-1221			607	158	SLU 82	0.13	No
ini.	3	-935	-164.74	2497			887	349	SLU 83	0.14	No
fin.	3	374	2.6	-1245			607	156	SLU 83	0.13	No
ini.	3	-958	-167.09	2436			894	351	SLU 75	0.14	No
fin.	3	387	6.65	-1141			607	153	SLU 75	0.13	No
ini.	3	-976	-170.34	2450			899	353	SLU 78	0.14	No
fin.	3	367	5.21	-1150			607	157	SLU 78	0.14	No
ini.	3	-917	-168.65	2460			882	347	SLU 74	0.14	No
fin.	3	416	10.95	-1156			607	145	SLU 74	0.13	No

Verifiche a pressoflessione delle travi in muratura in combinazioni sismiche

Sezione	γM	N	M	Mu	Comb.	c.s.	Verifica
ini.	2	1211	474.26	1198.62	SLV 4	2.53	Si
fin.	2	-3677	-909.54	1198.62	SLV 4	1.32	Si
ini.	2	488	288.06	1198.62	SLV 2	4.16	Si
fin.	2	-3195	-750.72	1198.62	SLV 2	1.6	Si
ini.	2	-2313	-588	1198.62	SLV 9	2.04	Si
fin.	2	2245	535.01	1198.62	SLV 9	2.24	Si
ini.	2	-2524	-725.51	1198.62	SLV 14	1.65	Si
fin.	2	4310	942.26	1198.62	SLV 14	1.27	Si
ini.	2	-1801	-539.31	1198.62	SLV 16	2.22	Si
fin.	2	3828	783.44	1198.62	SLV 16	1.53	Si
ini.	2	1211	474.26	1198.62	SLV 3	2.53	Si
fin.	2	-3677	-909.54	1198.62	SLV 3	1.32	Si
ini.	2	-2524	-725.51	1198.62	SLV 13	1.65	Si
fin.	2	4310	942.26	1198.62	SLV 13	1.27	Si
ini.	2	-2313	-588	1198.62	SLV 10	2.04	Si
fin.	2	2245	535.01	1198.62	SLV 10	2.24	Si
ini.	2	-1801	-539.31	1198.62	SLV 15	2.22	Si
fin.	2	3828	783.44	1198.62	SLV 15	1.53	Si
ini.	2	488	288.06	1198.62	SLV 1	4.16	Si

Sezione	γM	N	M	Mu	Comb.	c.s.	Verifica
fin.	2	-3195	-750.72	1198.62	SLV 1	1.6	Si

Verifiche a taglio delle travi in muratura secondo §C8.7.1.3.1 in combinazioni sismiche

Sezione	γM	N	M	V	Vt	Vp	Vt fess. diag.	Vt,lim	Comb.	c.s.	Verifica
ini.	2	-1801	-539.31	4035			1450	564	SLV 16	0.14	No
fin.	2	3828	783.44	2813			910	0	SLV 16	0	No
ini.	2	-2524	-725.51	5082			1667	632	SLV 13	0.12	No
fin.	2	4310	942.26	3623			910	0	SLV 13	0	No
ini.	2	-2524	-725.51	5082			1667	632	SLV 14	0.12	No
fin.	2	4310	942.26	3623			910	0	SLV 14	0	No
ini.	2	-2313	-588	4319			1604	613	SLV 9	0.14	No
fin.	2	2245	535.01	1803			910	0	SLV 9	0	No
ini.	2	1001	336.74	-874			910	74	SLV 7	0.08	No
fin.	2	-1613	-502.29	-3269			1394	545	SLV 7	0.17	No
ini.	2	1211	474.26	-1637			910	0	SLV 3	0	No
fin.	2	-3677	-909.54	-5089			2013	726	SLV 3	0.14	No
ini.	2	-1801	-539.31	4035			1450	564	SLV 15	0.14	No
fin.	2	3828	783.44	2813			910	0	SLV 15	0	No
ini.	2	-2313	-588	4319			1604	613	SLV 10	0.14	No
fin.	2	2245	535.01	1803			910	0	SLV 10	0	No
ini.	2	1211	474.26	-1637			910	0	SLV 4	0	No
fin.	2	-3677	-909.54	-5089			2013	726	SLV 4	0.14	No
ini.	2	1001	336.74	-874			910	74	SLV 8	0.08	No
fin.	2	-1613	-502.29	-3269			1394	545	SLV 8	0.17	No

Tabella dei coefficienti di sicurezza minimi

Stato limite	Coeff.s.	Comb.	Verifica
PF_SLV	1.272	SLV 13	Si
V_SLV	0	SLV 3	No
PF_SLU	4.562	SLU 69	Si
V_SLU	0.122	SLU 81	No

Trave di accoppiamento 76

Verifiche condotte secondo D.M. 17-01-18 (N.T.C.)

Dati geometrici

X ini.	Y ini.	Z ini.inf.	Z ini.sup.	H ini.	X fin.	Y fin.	Z fin.inf.	Z fin.sup	H fin.	Luce	Spessore	R. Trazione
-16.968	-4.413	8.11	8.55	0.44	-16.968	-3.323	8.11	8.55	0.44	1.09	0.28	30000

Caratteristiche del materiale

(Circolare 7 21-01-19 C8.5.I) Muratura in mattoni pieni e malta di calce LC2_Corti

fb_	fhk	fvk0	fhmedio	τ0	fv0	μ	ϕ	fvk,lim	E	G	FC
120000			172500	9000	20000	0.577	0.767	6500	320000000	128000000	1.2

Verifiche a pressoflessione delle travi in muratura in combinazioni non sismiche

Sezione	γM	N	M	Mu	Comb.	c.s.	Verifica
ini.	3	338	-85.69	275.03	SLU 44	3.21	Si
fin.	3	106	-22.07	275.03	SLU 44	12.46	Si
ini.	3	370	-91.01	275.03	SLU 65	3.02	Si
fin.	3	112	-23.95	275.03	SLU 65	11.48	Si
ini.	3	341	-89.15	275.03	SLU 23	3.08	Si
fin.	3	115	-23.63	275.03	SLU 23	11.64	Si
ini.	3	352	-86.08	275.03	SLU 55	3.19	Si
fin.	3	109	-23.94	275.03	SLU 55	11.49	Si
ini.	3	355	-92.3	275.03	SLU 10	2.98	Si
fin.	3	117	-23.73	275.03	SLU 10	11.59	Si
ini.	3	387	-97.63	275.03	SLU 31	2.82	Si
fin.	3	122	-25.61	275.03	SLU 31	10.74	Si
ini.	3	356	-89.54	275.03	SLU 34	3.07	Si
fin.	3	118	-25.5	275.03	SLU 34	10.78	Si
ini.	3	384	-94.17	275.03	SLU 52	2.92	Si
fin.	3	113	-24.04	275.03	SLU 52	11.44	Si
ini.	3	384	-91.41	275.03	SLU 76	3.01	Si
fin.	3	114	-25.82	275.03	SLU 76	10.65	Si
ini.	3	416	-99.49	275.03	SLU 73	2.76	Si
fin.	3	118	-25.93	275.03	SLU 73	10.61	Si

Verifiche a taglio delle travi in muratura secondo §C8.7.1.3.1 in combinazioni non sismiche

Sezione	γM	N	M	V	Vt	Vp	Vt fess. diag.	Vt,lim	Comb.	c.s.	Verifica
ini.	3	370	-91.01	140			316	37	SLU 65	0.27	No
fin.	3	112	-23.95	-47			316	102	SLU 65	2.17	Si
ini.	3	309	-83.83	191			316	59	SLU 2	0.31	No
fin.	3	110	-21.75	-39			316	102	SLU 2	2.6	Si
ini.	3	416	-99.49	124			316	0	SLU 73	0	No
fin.	3	118	-25.93	-35			316	100	SLU 73	2.9	Si
ini.	3	338	-85.69	161			316	50	SLU 44	0.31	No
fin.	3	106	-22.07	-55			316	102	SLU 44	1.86	Si
ini.	3	341	-89.15	170			316	49	SLU 23	0.29	No
fin.	3	115	-23.63	-31			316	101	SLU 23	3.26	Si
ini.	3	387	-97.63	154			316	28	SLU 31	0.18	No
fin.	3	122	-25.61	-19			316	100	SLU 31	5.32	Si
ini.	3	384	-91.41	97			316	30	SLU 76	0.31	No
fin.	3	114	-25.82	-43			316	101	SLU 76	2.34	Si
ini.	3	384	-94.17	145			316	30	SLU 52	0.21	No
fin.	3	113	-24.04	-43			316	101	SLU 52	2.37	Si

Sezione	γM	N	M	V	Vt	Vp	Vt fess. diag.	Vt,lim	Comb.	c.s.	Verifica
ini.	3	355	-92.3	175			316	44	SLU 10	0.25	No
fin.	3	117	-23.73	-27			316	101	SLU 10	3.73	Si
ini.	3	356	-89.54	128			316	44	SLU 34	0.34	No
fin.	3	118	-25.5	-27			316	101	SLU 34	3.68	Si

Verifiche a pressoflessione delle travi in muratura in combinazioni sismiche

Sezione	γM	N	M	Mu	Comb.	c.s.	Verifica
ini.	2	-2111	516.41	412.54	SLV 3	0.8	No
fin.	2	598	-107.96	412.54	SLV 3	3.82	Si
ini.	2	3513	-401	412.54	SLV 6	1.03	Si
fin.	2	-686	228.35	412.54	SLV 6	1.81	Si
ini.	2	2421	-548.89	412.54	SLV 13	0.75	No
fin.	2	-602	99.32	412.54	SLV 13	4.15	Si
ini.	2	2421	-548.89	412.54	SLV 14	0.75	No
fin.	2	-602	99.32	412.54	SLV 14	4.15	Si
ini.	2	-2111	516.41	412.54	SLV 4	0.8	No
fin.	2	598	-107.96	412.54	SLV 4	3.82	Si
ini.	2	-3896	598.18	412.54	SLV 7	0.69	No
fin.	2	899	-255.62	412.54	SLV 7	1.61	Si
ini.	2	4206	-630.66	412.54	SLV 9	0.65	No
fin.	2	-903	246.98	412.54	SLV 9	1.67	Si
ini.	2	3513	-401	412.54	SLV 5	1.03	Si
fin.	2	-686	228.35	412.54	SLV 5	1.81	Si
ini.	2	4206	-630.66	412.54	SLV 10	0.65	No
fin.	2	-903	246.98	412.54	SLV 10	1.67	Si
ini.	2	-3896	598.18	412.54	SLV 8	0.69	No
fin.	2	899	-255.62	412.54	SLV 8	1.61	Si

Verifiche a taglio delle travi in muratura secondo §C8.7.1.3.1 in combinazioni sismiche

Sezione	γM	N	M	V	Vt	Vp	Vt fess. diag.	Vt,lim	Comb.	c.s.	Verifica
ini.	2	2421	-548.89	-562			474	0	SLV 13	0	No
fin.	2	-602	99.32	252			635	251	SLV 13	1	No
ini.	2	-3896	598.18	2664			1513	483	SLV 7	0.18	No
fin.	2	899	-255.62	-471			474	0	SLV 7	0	No
ini.	2	2421	-548.89	-562			474	0	SLV 14	0	No
fin.	2	-602	99.32	252			635	251	SLV 14	1	No
ini.	2	-3203	368.52	2937			1328	445	SLV 12	0.15	No
fin.	2	682	-236.99	-367			474	0	SLV 12	0	No
ini.	2	-3896	598.18	2664			1513	483	SLV 8	0.18	No
fin.	2	899	-255.62	-471			474	0	SLV 8	0	No
ini.	2	4206	-630.66	-2937			474	0	SLV 9	0	No
fin.	2	-903	246.98	396			715	280	SLV 9	0.71	No
ini.	2	4206	-630.66	-2937			474	0	SLV 10	0	No
fin.	2	-903	246.98	396			715	280	SLV 10	0.71	No
ini.	2	3513	-401	-3210			474	0	SLV 5	0	No
fin.	2	-686	228.35	292			657	260	SLV 5	0.89	No
ini.	2	3513	-401	-3210			474	0	SLV 6	0	No
fin.	2	-686	228.35	292			657	260	SLV 6	0.89	No
ini.	2	-3203	368.52	2937			1328	445	SLV 11	0.15	No
fin.	2	682	-236.99	-367			474	0	SLV 11	0	No

Tabella dei coefficienti di sicurezza minimi

Stato limite	Coeff.s.	Comb.	Verifica
PF_SLV	0.654	SLV 9	No
V_SLV	0	SLV 5	No
PF_SLU	2.764	SLU 73	Si
V_SLU	0	SLU 73	No

Trave di accoppiamento 77

Verifiche condotte secondo D.M. 17-01-18 (N.T.C.)

Dati geometrici

X ini.	Y ini.	Z ini.inf.	Z ini.sup.	H ini.	X fin.	Y fin.	Z fin.inf.	Z fin.sup	H fin.	Luce	Spessore	R. Trazione
-15.287	-3.183	7.1	8.55	1.45	-16.187	-3.183	7.1	8.55	1.45	0.9	0.28	30000

Caratteristiche del materiale

(Circolare 7 21-01-19 C8.5.I) Muratura in mattoni pieni e malta di calce LC2_Corti

fb_	fhk	fvk0	fhmedio	τ0	fv0	μ	ϕ	fvk,lim	E	G	FC
120000			172500	9000	20000	0.577	0.767	6500	320000000	128000000	1.2

Verifiche a pressoflessione delle travi in muratura in combinazioni non sismiche

Sezione	γM	N	M	Mu	Comb.	c.s.	Verifica
ini.	3	-1005	-2519.42	2986.79	SLU 75	1.19	Si
fin.	3	-1005	1956.86	2986.79	SLU 75	1.53	Si
ini.	3	-968	-2590.33	2986.79	SLU 83	1.15	Si
fin.	3	-968	2038.13	2986.79	SLU 83	1.47	Si
ini.	3	-940	-2604.19	2986.79	SLU 81	1.15	Si
fin.	3	-940	2047.15	2986.79	SLU 81	1.46	Si
ini.	3	-1034	-2505.56	2986.79	SLU 78	1.19	Si
fin.	3	-1034	1947.83	2986.79	SLU 78	1.53	Si
ini.	3	-949	-2496.8	2986.79	SLU 77	1.2	Si
fin.	3	-949	1942.04	2986.79	SLU 77	1.54	Si
ini.	3	-1024	-2612.95	2986.79	SLU 82	1.14	Si
fin.	3	-1024	2052.94	2986.79	SLU 82	1.45	Si
ini.	3	-921	-2510.67	2986.79	SLU 74	1.19	Si

Sezione	γM	N	M	Mu	Comb.	c.s.	Verifica
fin.	3	-921	1951.07	2986.79	SLU 74	1.53	Si
ini.	3	-1053	-2599.08	2986.79	SLU 84	1.15	Si
fin.	3	-1053	2043.92	2986.79	SLU 84	1.46	Si
ini.	3	-1080	-2475.44	2986.79	SLU 76	1.21	Si
fin.	3	-1080	1931.94	2986.79	SLU 76	1.55	Si
ini.	3	-1051	-2489.3	2986.79	SLU 73	1.2	Si
fin.	3	-1051	1940.97	2986.79	SLU 73	1.54	Si

Verifiche a taglio delle travi in muratura secondo §C8.7.1.3.1 in combinazioni non sismiche

Sezione	γM	N	M	V	Vt	Vp	Vt fess. diag.	Vt,lim	Comb.	c.s.	Verifica
ini.	3	-968	-2590.33	6049			1951	771	SLU 83	0.13	No
fin.	3	-968	2038.13	4253			1951	771	SLU 83	0.18	No
ini.	3	-1053	-2599.08	6065			1985	785	SLU 84	0.13	No
fin.	3	-1053	2043.92	4269			1985	785	SLU 84	0.18	No
ini.	3	-1051	-2489.3	5770			1984	784	SLU 73	0.14	No
fin.	3	-1051	1940.97	4091			1984	784	SLU 73	0.19	No
ini.	3	-1024	-2612.95	6091			1973	780	SLU 82	0.13	No
fin.	3	-1024	2052.94	4294			1973	780	SLU 82	0.18	No
ini.	3	-940	-2604.19	6075			1939	766	SLU 81	0.13	No
fin.	3	-940	2047.15	4278			1939	766	SLU 81	0.18	No
ini.	3	-968	-2446.99	5692			1951	771	SLU 79	0.14	No
fin.	3	-968	1913.26	4014			1951	771	SLU 79	0.19	No
ini.	3	-1005	-2519.42	5821			1966	777	SLU 75	0.13	No
fin.	3	-1005	1956.86	4143			1966	777	SLU 75	0.19	No
ini.	3	-1034	-2505.56	5796			1977	781	SLU 78	0.13	No
fin.	3	-1034	1947.83	4117			1977	781	SLU 78	0.19	No
ini.	3	-921	-2510.67	5805			1932	763	SLU 74	0.13	No
fin.	3	-921	1951.07	4126			1932	763	SLU 74	0.18	No
ini.	3	-949	-2496.8	5780			1943	768	SLU 77	0.13	No
fin.	3	-949	1942.04	4101			1943	768	SLU 77	0.19	No

Verifiche a pressoflessione delle travi in muratura in combinazioni sismiche

Sezione	γM	N	M	Mu	Comb.	c.s.	Verifica
ini.	2	-1677	2879.45	4480.18	SLV 4	1.56	Si
fin.	2	-1998	-2620.62	4480.18	SLV 4	1.71	Si
ini.	2	-1677	2879.45	4480.18	SLV 3	1.56	Si
fin.	2	-1998	-2620.62	4480.18	SLV 3	1.71	Si
ini.	2	368	-6256.91	4480.18	SLV 14	0.72	No
fin.	2	689	5212.8	4480.18	SLV 14	0.86	No
ini.	2	-2237	2297.99	4480.18	SLV 2	1.95	Si
fin.	2	-2635	-2010.04	4480.18	SLV 2	2.23	Si
ini.	2	-1197	-3941.06	4480.18	SLV 10	1.14	Si
fin.	2	-1217	3397.16	4480.18	SLV 10	1.32	Si
ini.	2	368	-6256.91	4480.18	SLV 13	0.72	No
fin.	2	689	5212.8	4480.18	SLV 13	0.86	No
ini.	2	928	-5675.45	4480.18	SLV 16	0.79	No
fin.	2	1325	4602.22	4480.18	SLV 16	0.97	No
ini.	2	-1197	-3941.06	4480.18	SLV 9	1.14	Si
fin.	2	-1217	3397.16	4480.18	SLV 9	1.32	Si
ini.	2	928	-5675.45	4480.18	SLV 15	0.79	No
fin.	2	1325	4602.22	4480.18	SLV 15	0.97	No
ini.	2	-2237	2297.99	4480.18	SLV 1	1.95	Si
fin.	2	-2635	-2010.04	4480.18	SLV 1	2.23	Si

Verifiche a taglio delle travi in muratura secondo §C8.7.1.3.1 in combinazioni sismiche

Sezione	γM	N	M	V	Vt	Vp	Vt fess. diag.	Vt,lim	Comb.	c.s.	Verifica
ini.	2	928	-5675.45	12218			2345	650	SLV 15	0.05	No
fin.	2	1325	4602.22	10861			2345	520	SLV 15	0.05	No
ini.	2	368	-6256.91	13256			2345	799	SLV 13	0.06	No
fin.	2	689	5212.8	12495			2345	717	SLV 13	0.06	No
ini.	2	928	-5675.45	12218			2345	650	SLV 16	0.05	No
fin.	2	1325	4602.22	10861			2345	520	SLV 16	0.05	No
ini.	2	670	-2002.86	4805			2345	723	SLV 12	0.15	No
fin.	2	904	1361.87	2718			2345	657	SLV 12	0.24	No
ini.	2	-1197	-3941.06	8264			2824	1113	SLV 9	0.13	No
fin.	2	-1217	3397.16	8166			2832	1116	SLV 9	0.14	No
ini.	2	-1197	-3941.06	8264			2824	1113	SLV 10	0.13	No
fin.	2	-1217	3397.16	8166			2832	1116	SLV 10	0.14	No
ini.	2	368	-6256.91	13256			2345	799	SLV 14	0.06	No
fin.	2	689	5212.8	12495			2345	717	SLV 14	0.06	No
ini.	2	-1677	2879.45	-5504			3016	1193	SLV 4	0.22	No
fin.	2	-1998	-2620.62	-6957			3145	1243	SLV 4	0.18	No
ini.	2	-1677	2879.45	-5504			3016	1193	SLV 3	0.22	No
fin.	2	-1998	-2620.62	-6957			3145	1243	SLV 3	0.18	No
ini.	2	670	-2002.86	4805			2345	723	SLV 11	0.15	No
fin.	2	904	1361.87	2718			2345	657	SLV 11	0.24	No

Tabella dei coefficienti di sicurezza minimi

Stato limite	Coeff.s.	Comb.	Verifica
PF_SLV	0.716	SLV 13	No
V_SLV	0.048	SLV 15	No
PF_SLU	1.143	SLU 82	Si
V_SLU	0.126	SLU 81	No

Trave di accoppiamento 78

Verifiche condotte secondo D.M. 17-01-18 (N.T.C.)

Dati geometrici

X ini.	Y ini.	Z ini.inf.	Z ini.sup.	H ini.	X fin.	Y fin.	Z fin.inf.	Z fin.sup	H fin.	Luce	Spessore	R. Trazione
-16.697	-4.696	8.11	8.55	0.44	-14.857	-4.696	8.11	8.55	0.44	1.84	0.3	30000

Caratteristiche del materiale

(Circolare 7 21-01-19 C8.5.I) Muratura in mattoni pieni e malta di calce LC2_Corti

fb_	fhk	fvk0	fhmedio	τ0	fv0	μ	ϕ	fvk,lim	E	G	FC
120000			172500	9000	20000	0.577	0.767	6500	320000000	128000000	1.2

Verifiche a pressoflessione delle travi in muratura in combinazioni non sismiche

Sezione	γM	N	M	Mu	Comb.	c.s.	Verifica
ini.	3	-520	51.71	294.67	SLU 78	5.7	Si
fin.	3	615	-349.47	294.67	SLU 78	0.84	No
ini.	3	-549	54.93	294.67	SLU 73	5.36	Si
fin.	3	576	-345.48	294.67	SLU 73	0.85	No
ini.	3	-495	43.6	294.67	SLU 75	6.76	Si
fin.	3	597	-336.51	294.67	SLU 75	0.88	No
ini.	3	-510	41.24	294.67	SLU 84	7.15	Si
fin.	3	642	-361.19	294.67	SLU 84	0.82	No
ini.	3	-485	33.13	294.67	SLU 82	8.9	Si
fin.	3	624	-348.23	294.67	SLU 82	0.85	No
ini.	3	-574	63.05	294.67	SLU 76	4.67	Si
fin.	3	594	-358.44	294.67	SLU 76	0.82	No
ini.	3	-396	14.39	294.67	SLU 83	20.48	Si
fin.	3	651	-333.02	294.67	SLU 83	0.88	No
ini.	3	-518	57.44	294.67	SLU 34	5.13	Si
fin.	3	525	-325.77	294.67	SLU 34	0.9	No
ini.	3	-454	35.63	294.67	SLU 42	8.27	Si
fin.	3	572	-328.52	294.67	SLU 42	0.9	No
ini.	3	-523	53.26	294.67	SLU 80	5.53	Si
fin.	3	619	-352.62	294.67	SLU 80	0.84	No

Verifiche a taglio delle travi in muratura secondo §C8.7.1.3.1 in combinazioni non sismiche

Sezione	γM	N	M	V	Vt	Vp	Vt fess. diag.	Vt,lim	Comb.	c.s.	Verifica
ini.	3	-454	35.63	176			460	182	SLU 42	1.03	Si
fin.	3	572	-328.52	-340			339	0	SLU 42	0	No
ini.	3	-483	55.59	92			468	185	SLU 59	2.02	Si
fin.	3	528	-302.81	-227			339	0	SLU 59	0	No
ini.	3	-331	8.61	245			427	169	SLU 60	0.69	No
fin.	3	542	-270.26	-248			339	0	SLU 60	0	No
ini.	3	-480	54.04	97			467	184	SLU 57	1.91	Si
fin.	3	524	-299.66	-223			339	0	SLU 57	0	No
ini.	3	-445	35.46	171			458	181	SLU 61	1.06	Si
fin.	3	532	-298.43	-267			339	0	SLU 61	0	No
ini.	3	-366	27.19	171			436	173	SLU 56	1.01	Si
fin.	3	534	-271.5	-204			339	0	SLU 56	0	No
ini.	3	-534	65.38	66			481	190	SLU 55	2.87	Si
fin.	3	503	-308.63	-240			339	0	SLU 55	0	No
ini.	3	-470	43.57	147			464	183	SLU 63	1.25	Si
fin.	3	551	-311.39	-267			339	0	SLU 63	0	No
ini.	3	-356	16.72	221			434	172	SLU 62	0.78	No
fin.	3	560	-283.22	-247			339	0	SLU 62	0	No
ini.	3	-369	28.74	166			437	173	SLU 58	1.04	Si
fin.	3	537	-274.65	-207			339	0	SLU 58	0	No

Verifiche a pressoflessione delle travi in muratura in combinazioni sismiche

Sezione	γM	N	M	Mu	Comb.	c.s.	Verifica
ini.	2	-2326	461.98	442.01	SLV 12	0.96	No
fin.	2	359	-762.89	442.01	SLV 12	0.58	No
ini.	2	-1945	355.6	442.01	SLV 16	1.24	Si
fin.	2	649	-821.44	442.01	SLV 16	0.54	No
ini.	2	-1945	355.6	442.01	SLV 15	1.24	Si
fin.	2	649	-821.44	442.01	SLV 15	0.54	No
ini.	2	1818	-436.47	442.01	SLV 6	1.01	Si
fin.	2	418	374.09	442.01	SLV 6	1.18	Si
ini.	2	-2326	461.98	442.01	SLV 11	0.96	No
fin.	2	359	-762.89	442.01	SLV 11	0.58	No
ini.	2	-914	127.23	442.01	SLV 14	3.47	Si
fin.	2	720	-570.65	442.01	SLV 14	0.77	No
ini.	2	1818	-436.47	442.01	SLV 5	1.01	Si
fin.	2	418	374.09	442.01	SLV 5	1.18	Si
ini.	2	-914	127.23	442.01	SLV 13	3.47	Si
fin.	2	720	-570.65	442.01	SLV 13	0.77	No
ini.	2	-1620	324.78	442.01	SLV 8	1.36	Si
fin.	2	182	-461.9	442.01	SLV 8	0.96	No
ini.	2	-1620	324.78	442.01	SLV 7	1.36	Si
fin.	2	182	-461.9	442.01	SLV 7	0.96	No

Verifiche a taglio delle travi in muratura secondo §C8.7.1.3.1 in combinazioni sismiche

Sezione	γM	N	M	V	Vt	Vp	Vt fess. diag.	Vt,lim	Comb.	c.s.	Verifica
ini.	2	1818	-436.47	1544			508	0	SLV 5	0	No
fin.	2	418	374.09	222			508	116	SLV 5	0.52	No
ini.	2	1437	-330.09	2094			508	0	SLV 1	0	No
fin.	2	129	432.65	122			508	172	SLV 1	1.41	Si
ini.	2	1437	-330.09	2094			508	0	SLV 2	0	No
fin.	2	129	432.65	122			508	172	SLV 2	1.41	Si
ini.	2	1113	-299.27	540			508	0	SLV 10	0	No
fin.	2	596	73.1	111			508	60	SLV 10	0.54	No
ini.	2	-1945	355.6	-1785			1027	380	SLV 16	0.21	No

Sezione	γM	N	M	V	Vt	Vp	Vt fess. diag.	Vt,lim	Comb.	c.s.	Verifica
fin.	2	649	-821.44	-441			508	25	SLV 16	0.06	No
ini.	2	1818	-436.47	1544			508	0	SLV 6	0	No
fin.	2	418	374.09	222			508	116	SLV 6	0.52	No
ini.	2	-1945	355.6	-1785			1027	380	SLV 15	0.21	No
fin.	2	649	-821.44	-441			508	25	SLV 15	0.06	No
ini.	2	1113	-299.27	540			508	0	SLV 9	0	No
fin.	2	596	73.1	111			508	60	SLV 9	0.54	No
ini.	2	-914	127.23	-1252			752	295	SLV 14	0.24	No
fin.	2	720	-570.65	-246			508	0	SLV 14	0	No
ini.	2	-914	127.23	-1252			752	295	SLV 13	0.24	No
fin.	2	720	-570.65	-246			508	0	SLV 13	0	No

Tabella dei coefficienti di sicurezza minimi

Stato limite	Coeff.s.	Comb.	Verifica
PF_SLV	0.538	SLV 15	No
V_SLV	0	SLV 1	No
PF_SLU	0.816	SLU 84	No
V_SLU	0	SLU 11	No

Trave di accoppiamento 79

Verifiche condotte secondo D.M. 17-01-18 (N.T.C.)

Dati geometrici

X ini.	Y ini.	Z ini.inf.	Z ini.sup.	H ini.	X fin.	Y fin.	Z fin.inf.	Z fin.sup	H fin.	Luce	Spessore	R. Trazione
-15.01	1.423	7.1	8.55	1.45	-15.01	2.223	7.1	8.55	1.45	0.8	0.14	30000

Caratteristiche del materiale

(Circolare 7 21-01-19 C8.5.I) Muratura in mattoni pieni e malta di calce LC2_Corti

fb_	fhk	fvk0	fhmedio	τ0	fv0	μ	ϕ	fvk,lim	E	G	FC
120000			172500	9000	20000	0.577	0.767	6500	320000000	128000000	1.2

Verifiche a pressoflessione delle travi in muratura in combinazioni non sismiche

Sezione	γM	N	M	Mu	Comb.	c.s.	Verifica
ini.	3	136	308.83	1493.39	SLU 83	4.84	Si
fin.	3	136	-2912.69	1493.39	SLU 83	0.51	No
ini.	3	139	307.85	1493.39	SLU 84	4.85	Si
fin.	3	139	-2905.64	1493.39	SLU 84	0.51	No
ini.	3	131	297.91	1493.39	SLU 74	5.01	Si
fin.	3	131	-2783	1493.39	SLU 74	0.54	No
ini.	3	131	304.95	1493.39	SLU 80	4.9	Si
fin.	3	131	-2880.38	1493.39	SLU 80	0.52	No
ini.	3	139	299.5	1493.39	SLU 81	4.99	Si
fin.	3	139	-2800.92	1493.39	SLU 81	0.53	No
ini.	3	128	307.24	1493.39	SLU 77	4.86	Si
fin.	3	128	-2894.77	1493.39	SLU 77	0.52	No
ini.	3	141	298.51	1493.39	SLU 82	5	Si
fin.	3	141	-2793.88	1493.39	SLU 82	0.53	No
ini.	3	128	305.93	1493.39	SLU 79	4.88	Si
fin.	3	128	-2887.42	1493.39	SLU 79	0.52	No
ini.	3	134	296.92	1493.39	SLU 75	5.03	Si
fin.	3	134	-2775.96	1493.39	SLU 75	0.54	No
ini.	3	131	306.26	1493.39	SLU 78	4.88	Si
fin.	3	131	-2887.73	1493.39	SLU 78	0.52	No

Verifiche a taglio delle travi in muratura secondo §C8.7.1.3.1 in combinazioni non sismiche

Sezione	γM	N	M	V	Vt	Vp	Vt fess. diag.	Vt,lim	Comb.	c.s.	Verifica
ini.	3	128	305.93	-3808			782	265	SLU 79	0.07	No
fin.	3	128	-2887.42	-4200			782	265	SLU 79	0.06	No
ini.	3	131	306.26	-3809			782	264	SLU 78	0.07	No
fin.	3	131	-2887.73	-4201			782	264	SLU 78	0.06	No
ini.	3	139	299.5	-3692			782	262	SLU 81	0.07	No
fin.	3	139	-2800.92	-4084			782	262	SLU 81	0.06	No
ini.	3	139	307.85	-3833			782	262	SLU 84	0.07	No
fin.	3	139	-2905.64	-4225			782	262	SLU 84	0.06	No
ini.	3	141	298.51	-3682			782	262	SLU 82	0.07	No
fin.	3	141	-2793.88	-4074			782	262	SLU 82	0.06	No
ini.	3	131	297.91	-3667			782	264	SLU 74	0.07	No
fin.	3	131	-2783	-4059			782	264	SLU 74	0.07	No
ini.	3	128	307.24	-3819			782	265	SLU 77	0.07	No
fin.	3	128	-2894.77	-4211			782	265	SLU 77	0.06	No
ini.	3	131	304.95	-3798			782	264	SLU 80	0.07	No
fin.	3	131	-2880.38	-4190			782	264	SLU 80	0.06	No
ini.	3	136	308.83	-3843			782	263	SLU 83	0.07	No
fin.	3	136	-2912.69	-4235			782	263	SLU 83	0.06	No
ini.	3	134	296.92	-3657			782	264	SLU 75	0.07	No
fin.	3	134	-2775.96	-4049			782	264	SLU 75	0.07	No

Verifiche a pressoflessione delle travi in muratura in combinazioni sismiche

Sezione	γM	N	M	Mu	Comb.	c.s.	Verifica
ini.	2	-196	625.26	2240.09	SLV 15	3.58	Si
fin.	2	-134	-5429.96	2240.09	SLV 15	0.41	No
ini.	2	-1285	1033.39	2240.09	SLV 7	2.17	Si
fin.	2	-1111	-6211.83	2240.09	SLV 7	0.36	No
ini.	2	-1217	1129.53	2240.09	SLV 12	1.98	Si
fin.	2	-1037	-7470.24	2240.09	SLV 12	0.3	No

Sezione	γM	N	M	Mu	Comb.	c.s.	Verifica
ini.	2	-1217	1129.53	2240.09	SLV 11	1.98	Si
fin.	2	-1037	-7470.24	2240.09	SLV 11	0.3	No
ini.	2	-196	625.26	2240.09	SLV 16	3.58	Si
fin.	2	-134	-5429.96	2240.09	SLV 16	0.41	No
ini.	2	-1285	1033.39	2240.09	SLV 8	2.17	Si
fin.	2	-1111	-6211.83	2240.09	SLV 8	0.36	No
ini.	2	1403	-727.9	2240.09	SLV 5	3.08	Si
fin.	2	1223	3812.23	2240.09	SLV 5	0.59	No
ini.	2	1472	-631.75	2240.09	SLV 9	3.55	Si
fin.	2	1297	2553.82	2240.09	SLV 9	0.88	No
ini.	2	1403	-727.9	2240.09	SLV 6	3.08	Si
fin.	2	1223	3812.23	2240.09	SLV 6	0.59	No
ini.	2	1472	-631.75	2240.09	SLV 10	3.55	Si
fin.	2	1297	2553.82	2240.09	SLV 10	0.88	No

Verifiche a taglio delle travi in muratura secondo §C8.7.1.3.1 in combinazioni sismiche

Sezione	γM	N	M	V	Vt	Vp	Vt fess. diag.	Vt,lim	Comb.	c.s.	Verifica
ini.	2	-1285	1033.39	-8626			1687	664	SLV 7	0.08	No
fin.	2	-1111	-6211.83	-8872			1617	639	SLV 7	0.07	No
ini.	2	1472	-631.75	3830			1173	0	SLV 9	0	No
fin.	2	1297	2553.82	3481			1173	0	SLV 9	0	No
ini.	2	-1217	1129.53	-10247			1659	654	SLV 11	0.06	No
fin.	2	-1037	-7470.24	-10482			1587	627	SLV 11	0.06	No
ini.	2	-196	625.26	-7211			1251	482	SLV 15	0.07	No
fin.	2	-134	-5429.96	-7474			1226	470	SLV 15	0.06	No
ini.	2	-1217	1129.53	-10247			1659	654	SLV 12	0.06	No
fin.	2	-1037	-7470.24	-10482			1587	627	SLV 12	0.06	No
ini.	2	1403	-727.9	5451			1173	0	SLV 6	0	No
fin.	2	1223	3812.23	5092			1173	0	SLV 6	0	No
ini.	2	-1285	1033.39	-8626			1687	664	SLV 8	0.08	No
fin.	2	-1111	-6211.83	-8872			1617	639	SLV 8	0.07	No
ini.	2	1403	-727.9	5451			1173	0	SLV 5	0	No
fin.	2	1223	3812.23	5092			1173	0	SLV 5	0	No
ini.	2	-196	625.26	-7211			1251	482	SLV 16	0.07	No
fin.	2	-134	-5429.96	-7474			1226	470	SLV 16	0.06	No
ini.	2	1472	-631.75	3830			1173	0	SLV 10	0	No
fin.	2	1297	2553.82	3481			1173	0	SLV 10	0	No

Tabella dei coefficienti di sicurezza minimi

Stato limite	Coeff.s.	Comb.	Verifica
PF_SLV	0.3	SLV 11	No
V_SLV	0	SLV 5	No
PF_SLU	0.513	SLU 83	No
V_SLU	0.062	SLU 84	No

Trave di accoppiamento 80

Verifiche condotte secondo D.M. 17-01-18 (N.T.C.)

Dati geometrici

X ini.	Y ini.	Z ini.inf.	Z ini.sup.	H ini.	X fin.	Y fin.	Z fin.inf.	Z fin.sup	H fin.	Luce	Spessore	R. Trazione
-13.727	0	7.1	8.55	1.45	-13.727	1	7.1	8.55	1.45	1	0.28	30000

Caratteristiche del materiale

(Circolare 7 21-01-19 C8.5.I) Muratura in mattoni pieni e malta di calce LC2_Corti

fb_	fhk	fvk0	fhmedio	τ0	fv0	μ	ϕ	fvk,lim	E	G	FC
120000			172500	9000	20000	0.577	0.767	6500	320000000	128000000	1.2

Verifiche a pressoflessione delle travi in muratura in combinazioni non sismiche

Sezione	γM	N	M	Mu	Comb.	c.s.	Verifica
ini.	3	-69	-2526.53	2986.79	SLU 79	1.18	Si
fin.	3	-69	-223.16	2986.79	SLU 79	13.38	Si
ini.	3	-57	-2214.06	2986.79	SLU 66	1.35	Si
fin.	3	-57	-188.32	2986.79	SLU 66	15.86	Si
ini.	3	-57	-2331.52	2986.79	SLU 71	1.28	Si
fin.	3	-57	-201.82	2986.79	SLU 71	14.8	Si
ini.	3	-61	-2253.39	2986.79	SLU 37	1.33	Si
fin.	3	-61	-206.03	2986.79	SLU 37	14.5	Si
ini.	3	-70	-2549.4	2986.79	SLU 77	1.17	Si
fin.	3	-70	-225.74	2986.79	SLU 77	13.23	Si
ini.	3	-73	-2469.78	2986.79	SLU 83	1.21	Si
fin.	3	-73	-216.22	2986.79	SLU 83	13.81	Si
ini.	3	-58	-2354.39	2986.79	SLU 69	1.27	Si
fin.	3	-58	-204.4	2986.79	SLU 69	14.61	Si
ini.	3	-71	-2329.45	2986.79	SLU 81	1.28	Si
fin.	3	-71	-200.15	2986.79	SLU 81	14.92	Si
ini.	3	-68	-2409.07	2986.79	SLU 74	1.24	Si
fin.	3	-68	-209.66	2986.79	SLU 74	14.25	Si
ini.	3	-62	-2276.25	2986.79	SLU 35	1.31	Si
fin.	3	-62	-208.61	2986.79	SLU 35	14.32	Si

Verifiche a taglio delle travi in muratura secondo §C8.7.1.3.1 in combinazioni non sismiche

Sezione	γM	N	M	V	Vt	Vp	Vt fess. diag.	Vt,lim	Comb.	c.s.	Verifica
ini.	3	-57	-2214.06	2521			1586	601	SLU 66	0.24	No
fin.	3	-57	-188.32	1538			1586	601	SLU 66	0.39	No
ini.	3	-57	-2331.52	2625			1586	601	SLU 71	0.23	No

Sezione	γM	N	M	V	Vt	Vp	Vt fess. diag.	Vt,lim	Comb.	c.s.	Verifica
fin.	3	-57	-201.82	1642			1586	601	SLU 71	0.37	No
ini.	3	-68	-2409.07	2695			1591	603	SLU 74	0.22	No
fin.	3	-68	-209.66	1712			1591	603	SLU 74	0.35	No
ini.	3	-71	-2329.45	2625			1592	604	SLU 81	0.23	No
fin.	3	-71	-200.15	1642			1592	604	SLU 81	0.37	No
ini.	3	-70	-2549.4	2819			1592	603	SLU 77	0.21	No
fin.	3	-70	-225.74	1836			1592	603	SLU 77	0.33	No
ini.	3	-58	-2354.39	2645			1587	601	SLU 69	0.23	No
fin.	3	-58	-204.4	1662			1587	601	SLU 69	0.36	No
ini.	3	-69	-2188.83	2501			1591	603	SLU 78	0.24	No
fin.	3	-69	-183.29	1518			1591	603	SLU 78	0.4	No
ini.	3	-73	-2469.78	2749			1593	604	SLU 83	0.22	No
fin.	3	-73	-216.22	1766			1593	604	SLU 83	0.34	No
ini.	3	-68	-2165.96	2481			1591	603	SLU 80	0.24	No
fin.	3	-68	-180.71	1498			1591	603	SLU 80	0.4	No
ini.	3	-69	-2526.53	2799			1591	603	SLU 79	0.22	No
fin.	3	-69	-223.16	1816			1591	603	SLU 79	0.33	No

Verifiche a pressoflessione delle travi in muratura in combinazioni sismiche

Sezione	γM	N	M	Mu	Comb.	c.s.	Verifica
ini.	2	-1090	-10469.65	4480.18	SLV 5	0.43	No
fin.	2	-1463	-987.79	4480.18	SLV 5	4.54	Si
ini.	2	-579	-5951.85	4480.18	SLV 2	0.75	No
fin.	2	-803	-539.92	4480.18	SLV 2	8.3	Si
ini.	2	858	6240.34	4480.18	SLV 7	0.72	No
fin.	2	1157	632.08	4480.18	SLV 7	7.09	Si
ini.	2	858	6240.34	4480.18	SLV 8	0.72	No
fin.	2	1157	632.08	4480.18	SLV 8	7.09	Si
ini.	2	1004	7380.94	4480.18	SLV 11	0.61	No
fin.	2	1377	734.15	4480.18	SLV 11	6.1	Si
ini.	2	-944	-9329.06	4480.18	SLV 10	0.48	No
fin.	2	-1243	-885.72	4480.18	SLV 10	5.06	Si
ini.	2	-1090	-10469.65	4480.18	SLV 6	0.43	No
fin.	2	-1463	-987.79	4480.18	SLV 6	4.54	Si
ini.	2	-579	-5951.85	4480.18	SLV 1	0.75	No
fin.	2	-803	-539.92	4480.18	SLV 1	8.3	Si
ini.	2	1004	7380.94	4480.18	SLV 12	0.61	No
fin.	2	1377	734.15	4480.18	SLV 12	6.1	Si
ini.	2	-944	-9329.06	4480.18	SLV 9	0.48	No
fin.	2	-1243	-885.72	4480.18	SLV 9	5.06	Si

Verifiche a taglio delle travi in muratura secondo §C8.7.1.3.1 in combinazioni sismiche

Sezione	γM	N	M	V	Vt	Vp	Vt fess. diag.	Vt,lim	Comb.	c.s.	Verifica
ini.	2	-579	-5951.85	5840			2577	1001	SLV 2	0.17	No
fin.	2	-803	-539.92	4884			2667	1043	SLV 2	0.21	No
ini.	2	-1090	-10469.65	9882			2781	1094	SLV 6	0.11	No
fin.	2	-1463	-987.79	9127			2931	1158	SLV 6	0.13	No
ini.	2	1004	7380.94	-6290			2345	627	SLV 11	0.1	No
fin.	2	1377	734.15	-7039			2345	500	SLV 11	0.07	No
ini.	2	1004	7380.94	-6290			2345	627	SLV 12	0.1	No
fin.	2	1377	734.15	-7039			2345	500	SLV 12	0.07	No
ini.	2	-944	-9329.06	8815			2723	1068	SLV 9	0.12	No
fin.	2	-1243	-885.72	8194			2843	1121	SLV 9	0.14	No
ini.	2	858	6240.34	-5223			2345	671	SLV 7	0.13	No
fin.	2	1157	632.08	-6106			2345	579	SLV 7	0.09	No
ini.	2	-944	-9329.06	8815			2723	1068	SLV 10	0.12	No
fin.	2	-1243	-885.72	8194			2843	1121	SLV 10	0.14	No
ini.	2	-579	-5951.85	5840			2577	1001	SLV 1	0.17	No
fin.	2	-803	-539.92	4884			2667	1043	SLV 1	0.21	No
ini.	2	858	6240.34	-5223			2345	671	SLV 8	0.13	No
fin.	2	1157	632.08	-6106			2345	579	SLV 8	0.09	No
ini.	2	-1090	-10469.65	9882			2781	1094	SLV 5	0.11	No
fin.	2	-1463	-987.79	9127			2931	1158	SLV 5	0.13	No

Tabella dei coefficienti di sicurezza minimi

Stato limite	Coeff.s.	Comb.	Verifica
PF_SLV	0.428	SLV 5	No
V_SLV	0.071	SLV 11	No
PF_SLU	1.172	SLU 77	Si
V_SLU	0.214	SLU 77	No

Trave di accoppiamento 81

Verifiche condotte secondo D.M. 17-01-18 (N.T.C.)

Dati geometrici

X ini.	Y ini.	Z ini.inf.	Z ini.sup.	H ini.	X fin.	Y fin.	Z fin.inf.	Z fin.sup	H fin.	Luce	Spessore	R. Trazione
-17.793	6.64	5	5.9	0.9	-16.793	6.64	5	5.9	0.9	1	0.28	30000

Caratteristiche del materiale

(Circolare 7 21-01-19 C8.5.I) Muratura in mattoni pieni e malta di calce LC2_Corti

fb_	fhk	fvk0	fhmedio	τ0	fv0	μ	ϕ	fvk,lim	E	G	FC
120000			172500	9000	20000	0.577	0.767	6500	320000000	128000000	1.2

Verifiche a pressoflessione delle travi in muratura in combinazioni non sismiche

Sezione	γM	N	M	Mu	Comb.	c.s.	Verifica

Sezione	γM	N	M	Mu	Comb.	c.s.	Verifica
ini.	3	-862	79.62	1150.68	SLU 80	14.45	Si
fin.	3	-1692	395.02	1150.68	SLU 80	2.91	Si
ini.	3	-868	83.41	1150.68	SLU 84	13.8	Si
fin.	3	-1708	399.01	1150.68	SLU 84	2.88	Si
ini.	3	-865	80.01	1150.68	SLU 79	14.38	Si
fin.	3	-1696	395.31	1150.68	SLU 79	2.91	Si
ini.	3	-870	80.17	1150.68	SLU 77	14.35	Si
fin.	3	-1713	399.68	1150.68	SLU 77	2.88	Si
ini.	3	-861	80.17	1150.68	SLU 75	14.35	Si
fin.	3	-1677	389.11	1150.68	SLU 75	2.96	Si
ini.	3	-862	83.79	1150.68	SLU 82	13.73	Si
fin.	3	-1676	388.73	1150.68	SLU 82	2.96	Si
ini.	3	-867	79.78	1150.68	SLU 78	14.42	Si
fin.	3	-1709	399.39	1150.68	SLU 78	2.88	Si
ini.	3	-866	84.18	1150.68	SLU 81	13.67	Si
fin.	3	-1680	389.01	1150.68	SLU 81	2.96	Si
ini.	3	-872	83.79	1150.68	SLU 83	13.73	Si
fin.	3	-1712	399.3	1150.68	SLU 83	2.88	Si
ini.	3	-864	80.55	1150.68	SLU 74	14.28	Si
fin.	3	-1680	389.39	1150.68	SLU 74	2.96	Si

Verifiche a taglio delle travi in muratura secondo §C8.7.1.3.1 in combinazioni non sismiche

Sezione	γM	N	M	V	Vt	Vp	Vt fess. diag.	Vt,lim	Comb.	c.s.	Verifica
ini.	3	-865	80.01	-2059			1185	468	SLU 79	0.23	No
fin.	3	-1696	395.31	2922			1484	571	SLU 79	0.2	No
ini.	3	-870	80.17	-2085			1187	469	SLU 77	0.22	No
fin.	3	-1713	399.68	2961			1490	573	SLU 77	0.19	No
ini.	3	-872	83.79	-2042			1187	469	SLU 83	0.23	No
fin.	3	-1712	399.3	2913			1490	573	SLU 83	0.2	No
ini.	3	-854	79.75	-2000			1181	467	SLU 76	0.23	No
fin.	3	-1657	384.54	2832			1470	567	SLU 76	0.2	No
ini.	3	-862	79.62	-2058			1184	468	SLU 80	0.23	No
fin.	3	-1692	395.02	2921			1483	571	SLU 80	0.2	No
ini.	3	-864	80.55	-2029			1185	468	SLU 74	0.23	No
fin.	3	-1680	389.39	2872			1478	569	SLU 74	0.2	No
ini.	3	-861	80.17	-2028			1183	468	SLU 75	0.23	No
fin.	3	-1677	389.11	2872			1477	569	SLU 75	0.2	No
ini.	3	-862	83.79	-1984			1184	468	SLU 82	0.24	No
fin.	3	-1676	388.73	2824			1477	569	SLU 82	0.2	No
ini.	3	-868	83.41	-2041			1186	469	SLU 84	0.23	No
fin.	3	-1708	399.01	2913			1488	572	SLU 84	0.2	No
ini.	3	-867	79.78	-2084			1185	469	SLU 78	0.22	No
fin.	3	-1709	399.39	2960			1489	573	SLU 78	0.19	No

Verifiche a pressoflessione delle travi in muratura in combinazioni sismiche

Sezione	γM	N	M	Mu	Comb.	c.s.	Verifica
ini.	2	4155	-1162.32	1726.01	SLV 3	1.48	Si
fin.	2	-6626	1844.05	1726.01	SLV 3	0.94	No
ini.	2	4957	-1178.28	1726.01	SLV 2	1.46	Si
fin.	2	-5854	1782.38	1726.01	SLV 2	0.97	No
ini.	2	-414	-284.79	1726.01	SLV 7	6.06	Si
fin.	2	-3980	831.85	1726.01	SLV 7	2.07	Si
ini.	2	-6225	1291.71	1726.01	SLV 15	1.34	Si
fin.	2	3508	-1253.49	1726.01	SLV 15	1.38	Si
ini.	2	-414	-284.79	1726.01	SLV 8	6.06	Si
fin.	2	-3980	831.85	1726.01	SLV 8	2.07	Si
ini.	2	-6225	1291.71	1726.01	SLV 16	1.34	Si
fin.	2	3508	-1253.49	1726.01	SLV 16	1.38	Si
ini.	2	-5423	1275.76	1726.01	SLV 13	1.35	Si
fin.	2	4280	-1315.16	1726.01	SLV 13	1.31	Si
ini.	2	4957	-1178.28	1726.01	SLV 1	1.46	Si
fin.	2	-5854	1782.38	1726.01	SLV 1	0.97	No
ini.	2	-5423	1275.76	1726.01	SLV 14	1.35	Si
fin.	2	4280	-1315.16	1726.01	SLV 14	1.31	Si
ini.	2	4155	-1162.32	1726.01	SLV 4	1.48	Si
fin.	2	-6626	1844.05	1726.01	SLV 4	0.94	No

Verifiche a taglio delle travi in muratura secondo §C8.7.1.3.1 in combinazioni sismiche

Sezione	γM	N	M	V	Vt	Vp	Vt fess. diag.	Vt,lim	Comb.	c.s.	Verifica
ini.	2	-855	398.23	-2569			1618	639	SLV 10	0.25	No
fin.	2	1634	-302.97	-1749			1310	0	SLV 10	0	No
ini.	2	4155	-1162.32	5186			1310	0	SLV 4	0	No
fin.	2	-6626	1844.05	10333			3696	1233	SLV 4	0.12	No
ini.	2	-5423	1275.76	-8034			3263	1136	SLV 13	0.14	No
fin.	2	4280	-1315.16	-6388			1310	0	SLV 13	0	No
ini.	2	4957	-1178.28	5738			1310	0	SLV 2	0	No
fin.	2	-5854	1782.38	9533			3418	1172	SLV 2	0.12	No
ini.	2	2259	-337.98	1563			1310	0	SLV 6	0	No
fin.	2	-1406	626.3	3027			1816	717	SLV 6	0.24	No
ini.	2	4155	-1162.32	5186			1310	0	SLV 3	0	No
fin.	2	-6626	1844.05	10333			3696	1233	SLV 3	0.12	No
ini.	2	4957	-1178.28	5738			1310	0	SLV 1	0	No
fin.	2	-5854	1782.38	9533			3418	1172	SLV 1	0.12	No
ini.	2	-5423	1275.76	-8034			3263	1136	SLV 14	0.14	No
fin.	2	4280	-1315.16	-6388			1310	0	SLV 14	0	No
ini.	2	-855	398.23	-2569			1618	639	SLV 9	0.25	No
fin.	2	1634	-302.97	-1749			1310	0	SLV 9	0	No
ini.	2	2259	-337.98	1563			1310	0	SLV 5	0	No
fin.	2	-1406	626.3	3027			1816	717	SLV 5	0.24	No

Tabella dei coefficienti di sicurezza minimi

Stato limite	Coeff.s.	Comb.	Verifica
PF_SLV	0.936	SLV 3	No
V_SLV	0	SLV 1	No
PF_SLU	2.879	SLU 77	Si
V_SLU	0.193	SLU 78	No

Trave di accoppiamento 82

Verifiche condotte secondo D.M. 17-01-18 (N.T.C.)

Dati geometrici

X ini.	Y ini.	Z ini.inf.	Z ini.sup.	H ini.	X fin.	Y fin.	Z fin.inf.	Z fin.sup	H fin.	Luce	Spessore	R. Trazione
-17.793	6.64	7.8	8.55	0.75	-16.793	6.64	7.8	8.55	0.75	1	0.28	30000

Caratteristiche del materiale

(Circolare 7 21-01-19 C8.5.I) Muratura in mattoni pieni e malta di calce LC2_Corti

fb_	fhk	fvk0	fhmedio	τ0	fv0	μ	ϕ	fvk,lim	E	G	FC
120000			172500	9000	20000	0.577	0.767	6500	320000000	128000000	1.2

Verifiche a pressoflessione delle travi in muratura in combinazioni non sismiche

Sezione	γM	N	M	Mu	Comb.	c.s.	Verifica
ini.	3	-994	-248.85	799.08	SLU 78	3.21	Si
fin.	3	-343	-144.69	799.08	SLU 78	5.52	Si
ini.	3	-1021	-247.83	799.08	SLU 83	3.22	Si
fin.	3	-391	-149.17	799.08	SLU 83	5.36	Si
ini.	3	-992	-239.58	799.08	SLU 82	3.34	Si
fin.	3	-399	-146.86	799.08	SLU 82	5.44	Si
ini.	3	-996	-239.79	799.08	SLU 81	3.33	Si
fin.	3	-404	-147.25	799.08	SLU 81	5.43	Si
ini.	3	-969	-240.81	799.08	SLU 75	3.32	Si
fin.	3	-356	-142.76	799.08	SLU 75	5.6	Si
ini.	3	-973	-241.02	799.08	SLU 74	3.32	Si
fin.	3	-360	-143.15	799.08	SLU 74	5.58	Si
ini.	3	-989	-245.77	799.08	SLU 80	3.25	Si
fin.	3	-345	-143.11	799.08	SLU 80	5.58	Si
ini.	3	-993	-245.98	799.08	SLU 79	3.25	Si
fin.	3	-350	-143.49	799.08	SLU 79	5.57	Si
ini.	3	-1017	-247.62	799.08	SLU 84	3.23	Si
fin.	3	-386	-148.79	799.08	SLU 84	5.37	Si
ini.	3	-998	-249.06	799.08	SLU 77	3.21	Si
fin.	3	-347	-145.08	799.08	SLU 77	5.51	Si

Verifiche a taglio delle travi in muratura secondo §C8.7.1.3.1 in combinazioni non sismiche

Sezione	γM	N	M	V	Vt	Vp	Vt fess. diag.	Vt,lim	Comb.	c.s.	Verifica
ini.	3	-973	-241.02	3701			898	353	SLU 74	0.1	No
fin.	3	-360	-143.15	-2237			715	281	SLU 74	0.13	No
ini.	3	-994	-248.85	3806			905	355	SLU 78	0.09	No
fin.	3	-343	-144.69	-2281			709	279	SLU 78	0.12	No
ini.	3	-989	-245.77	3763			903	355	SLU 80	0.09	No
fin.	3	-345	-143.11	-2258			710	279	SLU 80	0.12	No
ini.	3	-996	-239.79	3740			905	355	SLU 81	0.09	No
fin.	3	-404	-147.25	-2291			728	287	SLU 81	0.13	No
ini.	3	-993	-245.98	3765			904	355	SLU 79	0.09	No
fin.	3	-350	-143.49	-2259			711	280	SLU 79	0.12	No
ini.	3	-1021	-247.83	3846			913	358	SLU 83	0.09	No
fin.	3	-391	-149.17	-2337			724	285	SLU 83	0.12	No
ini.	3	-1017	-247.62	3845			912	358	SLU 84	0.09	No
fin.	3	-386	-148.79	-2336			722	284	SLU 84	0.12	No
ini.	3	-998	-249.06	3807			906	355	SLU 77	0.09	No
fin.	3	-347	-145.08	-2283			711	279	SLU 77	0.12	No
ini.	3	-992	-239.58	3739			904	355	SLU 82	0.09	No
fin.	3	-399	-146.86	-2290			726	286	SLU 82	0.12	No
ini.	3	-969	-240.81	3700			897	352	SLU 75	0.1	No
fin.	3	-356	-142.76	-2235			713	280	SLU 75	0.13	No

Verifiche a pressoflessione delle travi in muratura in combinazioni sismiche

Sezione	γM	N	M	Mu	Comb.	c.s.	Verifica
ini.	2	-5132	-1037.46	1198.62	SLV 1	1.16	Si
fin.	2	4420	1181.43	1198.62	SLV 1	1.01	Si
ini.	2	-2487	-852.12	1198.62	SLV 7	1.41	Si
fin.	2	1451	-109.9	1198.62	SLV 7	10.91	Si
ini.	2	3853	716.72	1198.62	SLV 16	1.67	Si
fin.	2	-4911	-1371.77	1198.62	SLV 16	0.87	No
ini.	2	-5132	-1037.46	1198.62	SLV 2	1.16	Si
fin.	2	4420	1181.43	1198.62	SLV 2	1.01	Si
ini.	2	-5408	-1273.39	1198.62	SLV 3	0.94	No
fin.	2	4583	962.51	1198.62	SLV 3	1.25	Si
ini.	2	4128	952.66	1198.62	SLV 13	1.26	Si
fin.	2	-5074	-1152.85	1198.62	SLV 13	1.04	Si
ini.	2	3853	716.72	1198.62	SLV 15	1.67	Si
fin.	2	-4911	-1371.77	1198.62	SLV 15	0.87	No
ini.	2	4128	952.66	1198.62	SLV 14	1.26	Si
fin.	2	-5074	-1152.85	1198.62	SLV 14	1.04	Si
ini.	2	-2487	-852.12	1198.62	SLV 8	1.41	Si
fin.	2	1451	-109.9	1198.62	SLV 8	10.91	Si
ini.	2	-5408	-1273.39	1198.62	SLV 4	0.94	No

Sezione	γM	N	M	Mu	Comb.	c.s.	Verifica
fin.	2	4583	962.51	1198.62	SLV 4	1.25	Si

Verifiche a taglio delle travi in muratura secondo §C8.7.1.3.1 in combinazioni sismiche

Sezione	γM	N	M	V	Vt	Vp	Vt fess. diag.	Vt,lim	Comb.	c.s.	Verifica
ini.	2	-5408	-1273.39	9175			2532	849	SLV 3	0.09	No
fin.	2	4583	962.51	4063			910	0	SLV 3	0	No
ini.	2	-5132	-1037.46	8434			2449	831	SLV 1	0.1	No
fin.	2	4420	1181.43	4572			910	0	SLV 1	0	No
ini.	2	-2487	-852.12	5577			1656	628	SLV 7	0.11	No
fin.	2	1451	-109.9	-580			910	0	SLV 7	0	No
ini.	2	-5408	-1273.39	9175			2532	849	SLV 4	0.09	No
fin.	2	4583	962.51	4063			910	0	SLV 4	0	No
ini.	2	4128	952.66	-4317			910	0	SLV 14	0	No
fin.	2	-5074	-1152.85	-6999			2432	827	SLV 14	0.12	No
ini.	2	1208	531.38	-719			910	0	SLV 9	0	No
fin.	2	-1942	-80.44	-2355			1492	578	SLV 9	0.25	No
ini.	2	-2487	-852.12	5577			1656	628	SLV 8	0.11	No
fin.	2	1451	-109.9	-580			910	0	SLV 8	0	No
ini.	2	4128	952.66	-4317			910	0	SLV 13	0	No
fin.	2	-5074	-1152.85	-6999			2432	827	SLV 13	0.12	No
ini.	2	-5132	-1037.46	8434			2449	831	SLV 2	0.1	No
fin.	2	4420	1181.43	4572			910	0	SLV 2	0	No
ini.	2	1208	531.38	-719			910	0	SLV 10	0	No
fin.	2	-1942	-80.44	-2355			1492	578	SLV 10	0.25	No

Tabella dei coefficienti di sicurezza minimi

Stato limite	Coeff.s.	Comb.	Verifica
PF_SLV	0.874	SLV 15	No
V_SLV	0	SLV 1	No
PF_SLU	3.208	SLU 77	Si
V_SLU	0.093	SLU 84	No

Trave di accoppiamento 83

Verifiche condotte secondo D.M. 17-01-18 (N.T.C.)

Dati geometrici

X ini.	Y ini.	Z ini.inf.	Z ini.sup.	H ini.	X fin.	Y fin.	Z fin.inf.	Z fin.sup	H fin.	Luce	Spessore	R. Trazione
-12.868	6.64	5	5.9	0.9	-11.868	6.64	5	5.9	0.9	1	0.28	30000

Caratteristiche del materiale

(Circolare 7 21-01-19 C8.5.I) Muratura in mattoni pieni e malta di calce LC2_Corti

fb_	fhk	fvk0	fhmedio	τ0	fv0	μ	ϕ	fvk,lim	E	G	FC
120000			172500	9000	20000	0.577	0.767	6500	320000000	128000000	1.2

Verifiche a pressoflessione delle travi in muratura in combinazioni non sismiche

Sezione	γM	N	M	Mu	Comb.	c.s.	Verifica
ini.	3	-1886	402.96	1150.68	SLU 83	2.86	Si
fin.	3	-1090	28.99	1150.68	SLU 83	39.69	Si
ini.	3	-1835	397.13	1150.68	SLU 79	2.9	Si
fin.	3	-1047	28.2	1150.68	SLU 79	40.8	Si
ini.	3	-1832	397.19	1150.68	SLU 80	2.9	Si
fin.	3	-1044	27.75	1150.68	SLU 80	41.47	Si
ini.	3	-1831	391.2	1150.68	SLU 75	2.94	Si
fin.	3	-1063	31.46	1150.68	SLU 75	36.58	Si
ini.	3	-1833	391.14	1150.68	SLU 74	2.94	Si
fin.	3	-1066	31.91	1150.68	SLU 74	36.06	Si
ini.	3	-1851	400.7	1150.68	SLU 77	2.87	Si
fin.	3	-1060	30.03	1150.68	SLU 77	38.32	Si
ini.	3	-1883	403.02	1150.68	SLU 84	2.86	Si
fin.	3	-1086	28.53	1150.68	SLU 84	40.33	Si
ini.	3	-1866	393.46	1150.68	SLU 82	2.92	Si
fin.	3	-1093	30.41	1150.68	SLU 82	37.83	Si
ini.	3	-1868	393.4	1150.68	SLU 81	2.92	Si
fin.	3	-1097	30.87	1150.68	SLU 81	37.28	Si
ini.	3	-1848	400.76	1150.68	SLU 78	2.87	Si
fin.	3	-1056	29.58	1150.68	SLU 78	38.9	Si

Verifiche a taglio delle travi in muratura secondo §C8.7.1.3.1 in combinazioni non sismiche

Sezione	γM	N	M	V	Vt	Vp	Vt fess. diag.	Vt,lim	Comb.	c.s.	Verifica
ini.	3	-1813	387.68	-2092			1526	584	SLU 76	0.28	No
fin.	3	-1048	29.32	677			1251	493	SLU 76	0.73	No
ini.	3	-1831	391.2	-2116			1532	586	SLU 75	0.28	No
fin.	3	-1063	31.46	695			1256	495	SLU 75	0.71	No
ini.	3	-1835	397.13	-2153			1534	587	SLU 79	0.27	No
fin.	3	-1047	28.2	696			1250	493	SLU 79	0.71	No
ini.	3	-1866	393.46	-2110			1545	590	SLU 82	0.28	No
fin.	3	-1093	30.41	679			1267	499	SLU 82	0.73	No
ini.	3	-1832	397.19	-2154			1533	586	SLU 80	0.27	No
fin.	3	-1044	27.75	696			1249	492	SLU 80	0.71	No
ini.	3	-1883	403.02	-2173			1551	592	SLU 84	0.27	No
fin.	3	-1086	28.53	697			1264	498	SLU 84	0.71	No
ini.	3	-1848	400.76	-2179			1539	588	SLU 78	0.27	No
fin.	3	-1056	29.58	713			1254	494	SLU 78	0.69	No
ini.	3	-1833	391.14	-2114			1533	586	SLU 74	0.28	No
fin.	3	-1066	31.91	696			1257	495	SLU 74	0.71	No

Sezione	γM	N	M	V	Vt	Vp	Vt fess. diag.	Vt,lim	Comb.	c.s.	Verifica
ini.	3	-1886	402.96	-2172			1552	592	SLU 83	0.27	No
fin.	3	-1090	28.99	697			1266	498	SLU 83	0.71	No
ini.	3	-1851	400.7	-2178			1540	588	SLU 77	0.27	No
fin.	3	-1060	30.03	714			1255	494	SLU 77	0.69	No

Verifiche a pressoflessione delle travi in muratura in combinazioni sismiche

Sezione	γM	N	M	Mu	Comb.	c.s.	Verifica
ini.	2	-2585	1022.57	1726.01	SLV 12	1.69	Si
fin.	2	-48	-510.12	1726.01	SLV 12	3.38	Si
ini.	2	2317	-1676.33	1726.01	SLV 2	1.03	Si
fin.	2	-4501	1916.94	1726.01	SLV 2	0.9	No
ini.	2	-2585	1022.57	1726.01	SLV 11	1.69	Si
fin.	2	-48	-510.12	1726.01	SLV 11	3.38	Si
ini.	2	2161	-1561.11	1726.01	SLV 4	1.11	Si
fin.	2	-4773	1937.34	1726.01	SLV 4	0.89	No
ini.	2	-4704	2091.75	1726.01	SLV 13	0.83	No
fin.	2	3257	-1885	1726.01	SLV 13	0.92	No
ini.	2	-4860	2206.97	1726.01	SLV 15	0.78	No
fin.	2	2985	-1864.6	1726.01	SLV 15	0.93	No
ini.	2	-4704	2091.75	1726.01	SLV 14	0.83	No
fin.	2	3257	-1885	1726.01	SLV 14	0.92	No
ini.	2	2161	-1561.11	1726.01	SLV 3	1.11	Si
fin.	2	-4773	1937.34	1726.01	SLV 3	0.89	No
ini.	2	2317	-1676.33	1726.01	SLV 1	1.03	Si
fin.	2	-4501	1916.94	1726.01	SLV 1	0.9	No
ini.	2	-4860	2206.97	1726.01	SLV 16	0.78	No
fin.	2	2985	-1864.6	1726.01	SLV 16	0.93	No

Verifiche a taglio delle travi in muratura secondo §C8.7.1.3.1 in combinazioni sismiche

Sezione	γM	N	M	V	Vt	Vp	Vt fess. diag.	Vt,lim	Comb.	c.s.	Verifica
ini.	2	-4704	2091.75	-8315			3003	1073	SLV 13	0.13	No
fin.	2	3257	-1885	-6991			1310	0	SLV 13	0	No
ini.	2	2161	-1561.11	5475			1310	0	SLV 3	0	No
fin.	2	-4773	1937.34	7939			3028	1079	SLV 3	0.14	No
ini.	2	-2064	638.49	-3000			2053	801	SLV 9	0.27	No
fin.	2	859	-578.12	-2337			1310	278	SLV 9	0.12	No
ini.	2	-4860	2206.97	-8637			3060	1087	SLV 15	0.13	No
fin.	2	2985	-1864.6	-6614			1310	0	SLV 15	0	No
ini.	2	-4860	2206.97	-8637			3060	1087	SLV 16	0.13	No
fin.	2	2985	-1864.6	-6614			1310	0	SLV 16	0	No
ini.	2	-2064	638.49	-3000			2053	801	SLV 10	0.27	No
fin.	2	859	-578.12	-2337			1310	278	SLV 10	0.12	No
ini.	2	-4704	2091.75	-8315			3003	1073	SLV 14	0.13	No
fin.	2	3257	-1885	-6991			1310	0	SLV 14	0	No
ini.	2	2317	-1676.33	5797			1310	0	SLV 2	0	No
fin.	2	-4501	1916.94	7562			2930	1054	SLV 2	0.14	No
ini.	2	2317	-1676.33	5797			1310	0	SLV 1	0	No
fin.	2	-4501	1916.94	7562			2930	1054	SLV 1	0.14	No
ini.	2	2161	-1561.11	5475			1310	0	SLV 4	0	No
fin.	2	-4773	1937.34	7939			3028	1079	SLV 4	0.14	No

Tabella dei coefficienti di sicurezza minimi

Stato limite	Coeff.s.	Comb.	Verifica
PF_SLV	0.782	SLV 15	No
V_SLV	0	SLV 1	No
PF_SLU	2.855	SLU 84	Si
V_SLU	0.27	SLU 78	No

Trave di accoppiamento 84

Verifiche condotte secondo D.M. 17-01-18 (N.T.C.)

Dati geometrici

X ini.	Y ini.	Z ini.inf.	Z ini.sup.	H ini.	X fin.	Y fin.	Z fin.inf.	Z fin.sup	H fin.	Luce	Spessore	R. Trazione
-12.868	6.64	7.8	8.55	0.75	-11.868	6.64	7.8	8.55	0.75	1	0.28	30000

Caratteristiche del materiale

(Circolare 7 21-01-19 C8.5.I) Muratura in mattoni pieni e malta di calce LC2_Corti

fb_	fhk	fvk0	fhmedio	τ0	fv0	μ	ϕ	fvk,lim	E	G	FC
120000			172500	9000	20000	0.577	0.767	6500	320000000	128000000	1.2

Verifiche a pressoflessione delle travi in muratura in combinazioni non sismiche

Sezione	γM	N	M	Mu	Comb.	c.s.	Verifica
ini.	3	-577	-106.6	799.08	SLU 80	7.5	Si
fin.	3	-1003	-363.24	799.08	SLU 80	2.2	Si
ini.	3	-582	-107.07	799.08	SLU 79	7.46	Si
fin.	3	-1005	-363.04	799.08	SLU 79	2.2	Si
ini.	3	-627	-111.54	799.08	SLU 83	7.16	Si
fin.	3	-1054	-371.08	799.08	SLU 83	2.15	Si
ini.	3	-590	-109.05	799.08	SLU 77	7.33	Si
fin.	3	-1016	-366.74	799.08	SLU 77	2.18	Si
ini.	3	-586	-108.57	799.08	SLU 78	7.36	Si
fin.	3	-1014	-366.94	799.08	SLU 78	2.18	Si
ini.	3	-597	-107.79	799.08	SLU 75	7.41	Si
fin.	3	-1010	-357.63	799.08	SLU 75	2.23	Si
ini.	3	-638	-110.76	799.08	SLU 81	7.21	Si

Sezione	γM	N	M	Mu	Comb.	c.s.	Verifica
fin.	3	-1050	-361.78	799.08	SLU 81	2.21	Si
ini.	3	-622	-111.06	799.08	SLU 84	7.19	Si
fin.	3	-1052	-371.28	799.08	SLU 84	2.15	Si
ini.	3	-602	-108.27	799.08	SLU 74	7.38	Si
fin.	3	-1013	-357.43	799.08	SLU 74	2.24	Si
ini.	3	-634	-110.28	799.08	SLU 82	7.25	Si
fin.	3	-1048	-361.97	799.08	SLU 82	2.21	Si

Verifiche a taglio delle travi in muratura secondo §C8.7.1.3.1 in combinazioni non sismiche

Sezione	γM	N	M	V	Vt	Vp	Vt fess. diag.	Vt,lim	Comb.	c.s.	Verifica
ini.	3	-638	-110.76	1472			798	316	SLU 81	0.21	No
fin.	3	-1050	-361.78	-2368			922	361	SLU 81	0.15	No
ini.	3	-590	-109.05	1494			784	310	SLU 77	0.21	No
fin.	3	-1016	-366.74	-2412			911	357	SLU 77	0.15	No
ini.	3	-586	-108.57	1493			782	309	SLU 78	0.21	No
fin.	3	-1014	-366.94	-2413			911	357	SLU 78	0.15	No
ini.	3	-634	-110.28	1471			797	315	SLU 82	0.21	No
fin.	3	-1048	-361.97	-2370			921	361	SLU 82	0.15	No
ini.	3	-622	-111.06	1504			793	314	SLU 84	0.21	No
fin.	3	-1052	-371.28	-2431			922	361	SLU 84	0.15	No
ini.	3	-597	-107.79	1460			786	311	SLU 75	0.21	No
fin.	3	-1010	-357.63	-2353			910	357	SLU 75	0.15	No
ini.	3	-577	-106.6	1474			780	308	SLU 80	0.21	No
fin.	3	-1003	-363.24	-2389			907	356	SLU 80	0.15	No
ini.	3	-627	-111.54	1505			795	314	SLU 83	0.21	No
fin.	3	-1054	-371.08	-2429			923	361	SLU 83	0.15	No
ini.	3	-602	-108.27	1460			787	311	SLU 74	0.21	No
fin.	3	-1013	-357.43	-2351			910	357	SLU 74	0.15	No
ini.	3	-582	-107.07	1475			781	309	SLU 79	0.21	No
fin.	3	-1005	-363.04	-2388			908	356	SLU 79	0.15	No

Verifiche a pressoflessione delle travi in muratura in combinazioni sismiche

Sezione	γM	N	M	Mu	Comb.	c.s.	Verifica
ini.	2	2565	1386.3	1198.62	SLV 13	0.86	No
fin.	2	-4159	-1618.09	1198.62	SLV 13	0.74	No
ini.	2	3098	1406.84	1198.62	SLV 15	0.85	No
fin.	2	-3580	-1556.73	1198.62	SLV 15	0.77	No
ini.	2	-3389	-1531.68	1198.62	SLV 3	0.78	No
fin.	2	2792	1144.81	1198.62	SLV 3	1.05	Si
ini.	2	-327	333.85	1198.62	SLV 9	3.59	Si
fin.	2	-2604	-744.15	1198.62	SLV 9	1.61	Si
ini.	2	-3922	-1552.22	1198.62	SLV 1	0.77	No
fin.	2	2214	1083.45	1198.62	SLV 1	1.11	Si
ini.	2	3098	1406.84	1198.62	SLV 16	0.85	No
fin.	2	-3580	-1556.73	1198.62	SLV 16	0.77	No
ini.	2	-3389	-1531.68	1198.62	SLV 4	0.78	No
fin.	2	2792	1144.81	1198.62	SLV 4	1.05	Si
ini.	2	2565	1386.3	1198.62	SLV 14	0.86	No
fin.	2	-4159	-1618.09	1198.62	SLV 14	0.74	No
ini.	2	-3922	-1552.22	1198.62	SLV 2	0.77	No
fin.	2	2214	1083.45	1198.62	SLV 2	1.11	Si
ini.	2	-327	333.85	1198.62	SLV 10	3.59	Si
fin.	2	-2604	-744.15	1198.62	SLV 10	1.61	Si

Verifiche a taglio delle travi in muratura secondo §C8.7.1.3.1 in combinazioni sismiche

Sezione	γM	N	M	V	Vt	Vp	Vt fess. diag.	Vt,lim	Comb.	c.s.	Verifica
ini.	2	-3922	-1552.22	6243			2086	745	SLV 2	0.12	No
fin.	2	2214	1083.45	3826			910	0	SLV 2	0	No
ini.	2	2565	1386.3	-4483			910	0	SLV 14	0	No
fin.	2	-4159	-1618.09	-6767			2157	763	SLV 14	0.11	No
ini.	2	-3389	-1531.68	6442			1927	704	SLV 3	0.11	No
fin.	2	2792	1144.81	3615			910	0	SLV 3	0	No
ini.	2	1449	402.32	-298			910	0	SLV 11	0	No
fin.	2	-675	-539.59	-3516			1112	439	SLV 11	0.12	No
ini.	2	-497	-479.23	2920			1059	416	SLV 8	0.14	No
fin.	2	1237	270.87	-338			910	0	SLV 8	0	No
ini.	2	2565	1386.3	-4483			910	0	SLV 13	0	No
fin.	2	-4159	-1618.09	-6767			2157	763	SLV 13	0.11	No
ini.	2	-3922	-1552.22	6243			2086	745	SLV 1	0.12	No
fin.	2	2214	1083.45	3826			910	0	SLV 1	0	No
ini.	2	1449	402.32	-298			910	0	SLV 12	0	No
fin.	2	-675	-539.59	-3516			1112	439	SLV 12	0.12	No
ini.	2	-497	-479.23	2920			1059	416	SLV 7	0.14	No
fin.	2	1237	270.87	-338			910	0	SLV 7	0	No
ini.	2	-3389	-1531.68	6442			1927	704	SLV 4	0.11	No
fin.	2	2792	1144.81	3615			910	0	SLV 4	0	No

Tabella dei coefficienti di sicurezza minimi

Stato limite	Coeff.s.	Comb.	Verifica
PF_SLV	0.741	SLV 13	No
V_SLV	0	SLV 1	No
PF_SLU	2.152	SLU 84	Si
V_SLU	0.148	SLU 78	No

Trave di accoppiamento 85

Verifiche condotte secondo D.M. 17-01-18 (N.T.C.)

Dati geometrici

X ini.	Y ini.	Z ini.inf.	Z ini.sup.	H ini.	X fin.	Y fin.	Z fin.inf.	Z fin.sup	H fin.	Luce	Spessore	R. Trazione
-7.943	6.64	5	5.9	0.9	-6.943	6.64	5	5.9	0.9	1	0.28	30000

Caratteristiche del materiale

(Circolare 7 21-01-19 C8.5.I) Muratura in mattoni pieni e malta di calce LC2_Corti

fb_	fhk	fvk0	fhmedio	τ0	fv0	μ	ϕ	fvk,lim	E	G	FC
120000			172500	9000	20000	0.577	0.767	6500	320000000	128000000	1.2

Verifiche a pressoflessione delle travi in muratura in combinazioni non sismiche

Sezione	γM	N	M	Mu	Comb.	c.s.	Verifica
ini.	3	-713	208.83	1150.68	SLU 78	5.51	Si
fin.	3	-864	203.98	1150.68	SLU 78	5.64	Si
ini.	3	-648	181.89	1150.68	SLU 73	6.33	Si
fin.	3	-898	209.31	1150.68	SLU 73	5.5	Si
ini.	3	-690	201.27	1150.68	SLU 83	5.72	Si
fin.	3	-895	214.58	1150.68	SLU 83	5.36	Si
ini.	3	-688	201.13	1150.68	SLU 84	5.72	Si
fin.	3	-893	214.35	1150.68	SLU 84	5.37	Si
ini.	3	-660	188.83	1150.68	SLU 82	6.09	Si
fin.	3	-916	218.3	1150.68	SLU 82	5.27	Si
ini.	3	-687	196.67	1150.68	SLU 74	5.85	Si
fin.	3	-888	208.14	1150.68	SLU 74	5.53	Si
ini.	3	-708	206.72	1150.68	SLU 79	5.57	Si
fin.	3	-857	201.8	1150.68	SLU 79	5.7	Si
ini.	3	-715	208.97	1150.68	SLU 77	5.51	Si
fin.	3	-866	204.2	1150.68	SLU 77	5.64	Si
ini.	3	-662	188.97	1150.68	SLU 81	6.09	Si
fin.	3	-918	218.52	1150.68	SLU 81	5.27	Si
ini.	3	-685	196.53	1150.68	SLU 75	5.85	Si
fin.	3	-886	207.92	1150.68	SLU 75	5.53	Si

Verifiche a taglio delle travi in muratura secondo §C8.7.1.3.1 in combinazioni non sismiche

Sezione	γM	N	M	V	Vt	Vp	Vt fess. diag.	Vt,lim	Comb.	c.s.	Verifica
ini.	3	-708	206.72	-2070			1128	446	SLU 79	0.22	No
fin.	3	-857	201.8	2477			1182	467	SLU 79	0.19	No
ini.	3	-715	208.97	-2101			1131	447	SLU 77	0.21	No
fin.	3	-866	204.2	2517			1185	468	SLU 77	0.19	No
ini.	3	-685	196.53	-2011			1120	443	SLU 75	0.22	No
fin.	3	-886	207.92	2502			1193	471	SLU 75	0.19	No
ini.	3	-690	201.27	-2026			1122	444	SLU 83	0.22	No
fin.	3	-895	214.58	2525			1196	472	SLU 83	0.19	No
ini.	3	-688	201.13	-2027			1121	443	SLU 84	0.22	No
fin.	3	-893	214.35	2526			1195	472	SLU 84	0.19	No
ini.	3	-713	208.83	-2102			1130	447	SLU 78	0.21	No
fin.	3	-864	203.98	2518			1184	468	SLU 78	0.19	No
ini.	3	-687	196.67	-2010			1121	443	SLU 74	0.22	No
fin.	3	-888	208.14	2501			1193	471	SLU 74	0.19	No
ini.	3	-660	188.83	-1937			1111	439	SLU 82	0.23	No
fin.	3	-916	218.3	2510			1203	475	SLU 82	0.19	No
ini.	3	-662	188.97	-1936			1112	440	SLU 81	0.23	No
fin.	3	-918	218.52	2509			1204	475	SLU 81	0.19	No
ini.	3	-706	206.58	-2071			1127	446	SLU 80	0.22	No
fin.	3	-855	201.58	2478			1181	467	SLU 80	0.19	No

Verifiche a pressoflessione delle travi in muratura in combinazioni sismiche

Sezione	γM	N	M	Mu	Comb.	c.s.	Verifica
ini.	2	-4485	1469.08	1726.01	SLV 13	1.17	Si
fin.	2	4231	-957.98	1726.01	SLV 13	1.8	Si
ini.	2	-2598	589.17	1726.01	SLV 11	2.93	Si
fin.	2	28	-87.41	1726.01	SLV 11	19.75	Si
ini.	2	4027	-1245.2	1726.01	SLV 2	1.39	Si
fin.	2	-5138	1199.55	1726.01	SLV 2	1.44	Si
ini.	2	4027	-1245.2	1726.01	SLV 1	1.39	Si
fin.	2	-5138	1199.55	1726.01	SLV 1	1.44	Si
ini.	2	-4485	1469.08	1726.01	SLV 14	1.17	Si
fin.	2	4231	-957.98	1726.01	SLV 14	1.8	Si
ini.	2	3523	-1212.85	1726.01	SLV 3	1.42	Si
fin.	2	-5565	1252.82	1726.01	SLV 3	1.38	Si
ini.	2	-2598	589.17	1726.01	SLV 12	2.93	Si
fin.	2	28	-87.41	1726.01	SLV 12	19.75	Si
ini.	2	3523	-1212.85	1726.01	SLV 4	1.42	Si
fin.	2	-5565	1252.82	1726.01	SLV 4	1.38	Si
ini.	2	-4989	1501.43	1726.01	SLV 15	1.15	Si
fin.	2	3804	-904.7	1726.01	SLV 15	1.91	Si
ini.	2	-4989	1501.43	1726.01	SLV 16	1.15	Si
fin.	2	3804	-904.7	1726.01	SLV 16	1.91	Si

Verifiche a taglio delle travi in muratura secondo §C8.7.1.3.1 in combinazioni sismiche

Sezione	γM	N	M	V	Vt	Vp	Vt fess. diag.	Vt,lim	Comb.	c.s.	Verifica
ini.	2	3523	-1212.85	5327			1310	0	SLV 4	0	No
fin.	2	-5565	1252.82	7972			3313	1147	SLV 4	0.14	No
ini.	2	1636	-332.94	1657			1310	0	SLV 5	0	No
fin.	2	-1362	382.26	2479			1800	711	SLV 5	0.29	No
ini.	2	-917	481.34	-2527			1640	648	SLV 10	0.26	No
fin.	2	1449	-265	-1049			1310	0	SLV 10	0	No
ini.	2	-4485	1469.08	-8060			2925	1053	SLV 14	0.13	No
fin.	2	4231	-957.98	-4423			1310	0	SLV 14	0	No
ini.	2	3523	-1212.85	5327			1310	0	SLV 3	0	No

Sezione	γM	N	M	V	Vt	Vp	Vt fess. diag.	Vt,lim	Comb.	c.s.	Verifica
fin.	2	-5565	1252.82	7972			3313	1147	SLV 3	0.14	No
ini.	2	-917	481.34	-2527			1640	648	SLV 9	0.26	No
fin.	2	1449	-265	-1049			1310	0	SLV 9	0	No
ini.	2	1636	-332.94	1657			1310	0	SLV 6	0	No
fin.	2	-1362	382.26	2479			1800	711	SLV 6	0.29	No
ini.	2	-4485	1469.08	-8060			2925	1053	SLV 13	0.13	No
fin.	2	4231	-957.98	-4423			1310	0	SLV 13	0	No
ini.	2	4027	-1245.2	5886			1310	0	SLV 1	0	No
fin.	2	-5138	1199.55	7336			3160	1111	SLV 1	0.15	No
ini.	2	4027	-1245.2	5886			1310	0	SLV 2	0	No
fin.	2	-5138	1199.55	7336			3160	1111	SLV 2	0.15	No

Tabella dei coefficienti di sicurezza minimi

Stato limite	Coeff.s.	Comb.	Verifica
PF_SLV	1.15	SLV 15	Si
V_SLV	0	SLV 1	No
PF_SLU	5.266	SLU 81	Si
V_SLU	0.186	SLU 78	No

Trave di accoppiamento 86

Verifiche condotte secondo D.M. 17-01-18 (N.T.C.)

Dati geometrici

X ini.	Y ini.	Z ini.inf.	Z ini.sup.	H ini.	X fin.	Y fin.	Z fin.inf.	Z fin.sup	H fin.	Luce	Spessore	R. Trazione
-7.943	6.64	7.8	8.55	0.75	-6.943	6.64	7.8	8.55	0.75	1	0.28	30000

Caratteristiche del materiale

(Circolare 7 21-01-19 C8.5.I) Muratura in mattoni pieni e malta di calce LC2_Corti

fb_	fhk	fvk0	fhmedio	τ0	fv0	μ	ϕ	fvk,lim	E	G	FC
120000			172500	9000	20000	0.577	0.767	6500	320000000	128000000	1.2

Verifiche a pressoflessione delle travi in muratura in combinazioni non sismiche

Sezione	γM	N	M	Mu	Comb.	c.s.	Verifica
ini.	3	-501	-217.72	799.08	SLU 84	3.67	Si
fin.	3	-562	-158.36	799.08	SLU 84	5.05	Si
ini.	3	-466	-207.22	799.08	SLU 76	3.86	Si
fin.	3	-525	-151.37	799.08	SLU 76	5.28	Si
ini.	3	-438	-207.24	799.08	SLU 77	3.86	Si
fin.	3	-566	-164	799.08	SLU 77	4.87	Si
ini.	3	-543	-221.51	799.08	SLU 81	3.61	Si
fin.	3	-528	-148.03	799.08	SLU 81	5.4	Si
ini.	3	-540	-221.35	799.08	SLU 82	3.61	Si
fin.	3	-525	-147.91	799.08	SLU 82	5.4	Si
ini.	3	-473	-210.7	799.08	SLU 75	3.79	Si
fin.	3	-527	-153.45	799.08	SLU 75	5.21	Si
ini.	3	-504	-210.85	799.08	SLU 73	3.79	Si
fin.	3	-488	-140.93	799.08	SLU 73	5.67	Si
ini.	3	-435	-207.08	799.08	SLU 78	3.86	Si
fin.	3	-564	-163.89	799.08	SLU 78	4.88	Si
ini.	3	-476	-210.86	799.08	SLU 74	3.79	Si
fin.	3	-529	-153.56	799.08	SLU 74	5.2	Si
ini.	3	-505	-217.88	799.08	SLU 83	3.67	Si
fin.	3	-565	-158.47	799.08	SLU 83	5.04	Si

Verifiche a taglio delle travi in muratura secondo §C8.7.1.3.1 in combinazioni non sismiche

Sezione	γM	N	M	V	Vt	Vp	Vt fess. diag.	Vt,lim	Comb.	c.s.	Verifica
ini.	3	-501	-217.72	2677			757	299	SLU 84	0.11	No
fin.	3	-562	-158.36	-3137			775	307	SLU 84	0.1	No
ini.	3	-505	-217.88	2677			758	299	SLU 83	0.11	No
fin.	3	-565	-158.47	-3137			776	307	SLU 83	0.1	No
ini.	3	-476	-210.86	2572			749	296	SLU 74	0.12	No
fin.	3	-529	-153.56	-3013			765	302	SLU 74	0.1	No
ini.	3	-473	-210.7	2572			748	295	SLU 75	0.11	No
fin.	3	-527	-153.45	-3013			765	302	SLU 75	0.1	No
ini.	3	-430	-203.7	2548			736	290	SLU 80	0.11	No
fin.	3	-564	-161.88	-3080			776	307	SLU 80	0.1	No
ini.	3	-438	-207.24	2583			738	291	SLU 77	0.11	No
fin.	3	-566	-164	-3118			776	307	SLU 77	0.1	No
ini.	3	-543	-221.51	2666			769	304	SLU 81	0.11	No
fin.	3	-528	-148.03	-3033			765	302	SLU 81	0.1	No
ini.	3	-433	-203.86	2548			737	290	SLU 79	0.11	No
fin.	3	-567	-162	-3079			777	307	SLU 79	0.1	No
ini.	3	-540	-221.35	2666			768	304	SLU 82	0.11	No
fin.	3	-525	-147.91	-3033			764	302	SLU 82	0.1	No
ini.	3	-435	-207.08	2583			737	291	SLU 78	0.11	No
fin.	3	-564	-163.89	-3118			776	307	SLU 78	0.1	No

Verifiche a pressoflessione delle travi in muratura in combinazioni sismiche

Sezione	γM	N	M	Mu	Comb.	c.s.	Verifica
ini.	2	-2865	-483.36	1198.62	SLV 6	2.48	Si
fin.	2	-463	121.72	1198.62	SLV 6	9.85	Si
ini.	2	4466	918	1198.62	SLV 16	1.31	Si
fin.	2	-3808	-1010.12	1198.62	SLV 16	1.19	Si
ini.	2	-4439	-1198.17	1198.62	SLV 3	1	Si
fin.	2	3948	853.26	1198.62	SLV 3	1.4	Si

Sezione	γM	N	M	Mu	Comb.	c.s.	Verifica
ini.	2	-5151	-1210.1	1198.62	SLV 2	0.99	No
fin.	2	3165	816.63	1198.62	SLV 2	1.47	Si
ini.	2	-2865	-483.36	1198.62	SLV 5	2.48	Si
fin.	2	-463	121.72	1198.62	SLV 5	9.85	Si
ini.	2	3754	906.07	1198.62	SLV 13	1.32	Si
fin.	2	-4591	-1046.75	1198.62	SLV 13	1.15	Si
ini.	2	3754	906.07	1198.62	SLV 14	1.32	Si
fin.	2	-4591	-1046.75	1198.62	SLV 14	1.15	Si
ini.	2	-4439	-1198.17	1198.62	SLV 4	1	Si
fin.	2	3948	853.26	1198.62	SLV 4	1.4	Si
ini.	2	-5151	-1210.1	1198.62	SLV 1	0.99	No
fin.	2	3165	816.63	1198.62	SLV 1	1.47	Si
ini.	2	4466	918	1198.62	SLV 15	1.31	Si
fin.	2	-3808	-1010.12	1198.62	SLV 15	1.19	Si

Verifiche a taglio delle travi in muratura secondo §C8.7.1.3.1 in combinazioni sismiche

Sezione	γM	N	M	V	Vt	Vp	Vt fess. diag.	Vt,lim	Comb.	c.s.	Verifica
ini.	2	2180	191.26	936			910	0	SLV 11	0	No
fin.	2	-180	-315.21	-4746			964	371	SLV 11	0.08	No
ini.	2	2180	191.26	936			910	0	SLV 12	0	No
fin.	2	-180	-315.21	-4746			964	371	SLV 12	0.08	No
ini.	2	-492	-443.6	4067			1057	415	SLV 7	0.1	No
fin.	2	2147	243.81	-1184			910	0	SLV 7	0	No
ini.	2	-4439	-1198.17	7175			2242	783	SLV 3	0.11	No
fin.	2	3948	853.26	3687			910	0	SLV 3	0	No
ini.	2	-4439	-1198.17	7175			2242	783	SLV 4	0.11	No
fin.	2	3948	853.26	3687			910	0	SLV 4	0	No
ini.	2	-5151	-1210.1	6707			2455	832	SLV 1	0.12	No
fin.	2	3165	816.63	4299			910	0	SLV 1	0	No
ini.	2	3754	906.07	-3730			910	0	SLV 13	0	No
fin.	2	-4591	-1046.75	-7577			2287	794	SLV 13	0.1	No
ini.	2	-492	-443.6	4067			1057	415	SLV 8	0.1	No
fin.	2	2147	243.81	-1184			910	0	SLV 8	0	No
ini.	2	-5151	-1210.1	6707			2455	832	SLV 2	0.12	No
fin.	2	3165	816.63	4299			910	0	SLV 2	0	No
ini.	2	3754	906.07	-3730			910	0	SLV 14	0	No
fin.	2	-4591	-1046.75	-7577			2287	794	SLV 14	0.1	No

Tabella dei coefficienti di sicurezza minimi

Stato limite	Coeff.s.	Comb.	Verifica
PF_SLV	0.991	SLV 1	No
V_SLV	0	SLV 1	No
PF_SLU	3.607	SLU 81	Si
V_SLU	0.098	SLU 84	No

Trave di accoppiamento 87

Verifiche condotte secondo D.M. 17-01-18 (N.T.C.)

Dati geometrici

X ini.	Y ini.	Z ini.inf.	Z ini.sup.	H ini.	X fin.	Y fin.	Z fin.inf.	Z fin.sup	H fin.	Luce	Spessore	R. Trazione
-19.8	1.141	7.1	8.55	1.45	-20.6	1.141	7.1	8.55	1.45	0.8	0.28	30000

Caratteristiche del materiale

(Circolare 7 21-01-19 C8.5.I) Muratura in mattoni pieni e malta di calce LC2_Corti

fb_	fhk	fvk0	fhmedio	τ0	fv0	μ	ϕ	fvk,lim	E	G	FC
120000			172500	9000	20000	0.577	0.767	6500	320000000	128000000	1.2

Verifiche a pressoflessione delle travi in muratura in combinazioni non sismiche

Sezione	γM	N	M	Mu	Comb.	c.s.	Verifica
ini.	3	-4233	2201.28	2986.79	SLU 78	1.36	Si
fin.	3	-4233	-2206.43	2986.79	SLU 78	1.35	Si
ini.	3	-4231	2169.37	2986.79	SLU 80	1.38	Si
fin.	3	-4231	-2171.98	2986.79	SLU 80	1.38	Si
ini.	3	-4399	2155.92	2986.79	SLU 84	1.39	Si
fin.	3	-4399	-2138.37	2986.79	SLU 84	1.4	Si
ini.	3	-4360	2226.01	2986.79	SLU 83	1.34	Si
fin.	3	-4360	-2201.62	2986.79	SLU 83	1.36	Si
ini.	3	-4191	2150.88	2986.79	SLU 74	1.39	Si
fin.	3	-4191	-2145.65	2986.79	SLU 74	1.39	Si
ini.	3	-4230	2080.79	2986.79	SLU 75	1.44	Si
fin.	3	-4230	-2082.4	2986.79	SLU 75	1.43	Si
ini.	3	-4194	2271.37	2986.79	SLU 77	1.31	Si
fin.	3	-4194	-2269.67	2986.79	SLU 77	1.32	Si
ini.	3	-3794	2021.6	2986.79	SLU 69	1.48	Si
fin.	3	-3794	-2058.7	2986.79	SLU 69	1.45	Si
ini.	3	-4192	2239.46	2986.79	SLU 79	1.33	Si
fin.	3	-4192	-2235.23	2986.79	SLU 79	1.34	Si
ini.	3	-4357	2105.52	2986.79	SLU 81	1.42	Si
fin.	3	-4357	-2077.59	2986.79	SLU 81	1.44	Si

Verifiche a taglio delle travi in muratura secondo §C8.7.1.3.1 in combinazioni non sismiche

Sezione	γM	N	M	V	Vt	Vp	Vt fess. diag.	Vt,lim	Comb.	c.s.	Verifica
ini.	3	-4194	2271.37	-4532			3241	1191	SLU 77	0.26	No
fin.	3	-4194	-2269.67	-6826			3241	1191	SLU 77	0.17	No
ini.	3	-4357	2105.52	-3975			3306	1209	SLU 81	0.3	No

Sezione	γM	N	M	V	Vt	Vp	Vt fess. diag.	Vt,lim	Comb.	c.s.	Verifica
fin.	3	-4357	-2077.59	-6488			3306	1209	SLU 81	0.19	No
ini.	3	-4399	2155.92	-4114			3323	1213	SLU 84	0.29	No
fin.	3	-4399	-2138.37	-6627			3323	1213	SLU 84	0.18	No
ini.	3	-3497	1979.15	-3871			2962	1114	SLU 37	0.29	No
fin.	3	-3497	-1952.82	-5963			2962	1114	SLU 37	0.19	No
ini.	3	-4192	2239.46	-4449			3240	1191	SLU 79	0.27	No
fin.	3	-4192	-2235.23	-6743			3240	1191	SLU 79	0.18	No
ini.	3	-4233	2201.28	-4366			3257	1195	SLU 78	0.27	No
fin.	3	-4233	-2206.43	-6659			3257	1195	SLU 78	0.18	No
ini.	3	-3500	2011.07	-3954			2963	1114	SLU 35	0.28	No
fin.	3	-3500	-1987.27	-6046			2963	1114	SLU 35	0.18	No
ini.	3	-4360	2226.01	-4281			3308	1209	SLU 83	0.28	No
fin.	3	-4360	-2201.62	-6793			3308	1209	SLU 83	0.18	No
ini.	3	-4231	2169.37	-4283			3256	1195	SLU 80	0.28	No
fin.	3	-4231	-2171.98	-6576			3256	1195	SLU 80	0.18	No
ini.	3	-4191	2150.88	-4227			3240	1191	SLU 74	0.28	No
fin.	3	-4191	-2145.65	-6520			3240	1191	SLU 74	0.18	No

Verifiche a pressoflessione delle travi in muratura in combinazioni sismiche

Sezione	γM	N	M	Mu	Comb.	c.s.	Verifica
ini.	2	-2681	6057.19	4480.18	SLV 1	0.74	No
fin.	2	-3187	-6332.24	4480.18	SLV 1	0.71	No
ini.	2	-2789	5220.14	4480.18	SLV 4	0.86	No
fin.	2	-3102	-5510.78	4480.18	SLV 4	0.81	No
ini.	2	-2681	6057.19	4480.18	SLV 2	0.74	No
fin.	2	-3187	-6332.24	4480.18	SLV 2	0.71	No
ini.	2	-3104	-2514.43	4480.18	SLV 14	1.78	Si
fin.	2	-2792	2770.92	4480.18	SLV 14	1.62	Si
ini.	2	-2703	4033.68	4480.18	SLV 5	1.11	Si
fin.	2	-3149	-4104.51	4480.18	SLV 5	1.09	Si
ini.	2	-3212	-3351.48	4480.18	SLV 15	1.34	Si
fin.	2	-2706	3592.38	4480.18	SLV 15	1.25	Si
ini.	2	-2789	5220.14	4480.18	SLV 3	0.86	No
fin.	2	-3102	-5510.78	4480.18	SLV 3	0.81	No
ini.	2	-3212	-3351.48	4480.18	SLV 16	1.34	Si
fin.	2	-2706	3592.38	4480.18	SLV 16	1.25	Si
ini.	2	-3104	-2514.43	4480.18	SLV 13	1.78	Si
fin.	2	-2792	2770.92	4480.18	SLV 13	1.62	Si
ini.	2	-2703	4033.68	4480.18	SLV 6	1.11	Si
fin.	2	-3149	-4104.51	4480.18	SLV 6	1.09	Si

Verifiche a taglio delle travi in muratura secondo §C8.7.1.3.1 in combinazioni sismiche

Sezione	γM	N	M	V	Vt	Vp	Vt fess. diag.	Vt,lim	Comb.	c.s.	Verifica
ini.	2	-3212	-3351.48	9598			3630	1418	SLV 15	0.15	No
fin.	2	-2706	3592.38	8099			3428	1348	SLV 15	0.17	No
ini.	2	-2681	6057.19	-14985			3418	1345	SLV 1	0.09	No
fin.	2	-3187	-6332.24	-16334			3620	1415	SLV 1	0.09	No
ini.	2	-2789	5220.14	-12933			3461	1360	SLV 4	0.11	No
fin.	2	-3102	-5510.78	-14357			3586	1403	SLV 4	0.1	No
ini.	2	-3212	-3351.48	9598			3630	1418	SLV 16	0.15	No
fin.	2	-2706	3592.38	8099			3428	1348	SLV 16	0.17	No
ini.	2	-2703	4033.68	-9494			3426	1348	SLV 5	0.14	No
fin.	2	-3149	-4104.51	-10782			3605	1410	SLV 5	0.13	No
ini.	2	-3104	-2514.43	7545			3587	1404	SLV 14	0.19	No
fin.	2	-2792	2770.92	6122			3462	1360	SLV 14	0.22	No
ini.	2	-2703	4033.68	-9494			3426	1348	SLV 6	0.14	No
fin.	2	-3149	-4104.51	-10782			3605	1410	SLV 6	0.13	No
ini.	2	-2789	5220.14	-12933			3461	1360	SLV 3	0.11	No
fin.	2	-3102	-5510.78	-14357			3586	1403	SLV 3	0.1	No
ini.	2	-3104	-2514.43	7545			3587	1404	SLV 13	0.19	No
fin.	2	-2792	2770.92	6122			3462	1360	SLV 13	0.22	No
ini.	2	-2681	6057.19	-14985			3418	1345	SLV 2	0.09	No
fin.	2	-3187	-6332.24	-16334			3620	1415	SLV 2	0.09	No

Tabella dei coefficienti di sicurezza minimi

Stato limite	Coeff.s.	Comb.	Verifica
PF_SLV	0.708	SLV 1	No
V_SLV	0.087	SLV 1	No
PF_SLU	1.315	SLU 77	Si
V_SLU	0.175	SLU 77	No

Trave di accoppiamento 88

Verifiche condotte secondo D.M. 17-01-18 (N.T.C.)

Dati geometrici

X ini.	Y ini.	Z ini.inf.	Z ini.sup.	H ini.	X fin.	Y fin.	Z fin.inf.	Z fin.sup	H fin.	Luce	Spessore	R. Trazione
-11.865	1.141	7.5	8.55	1.05	-12.865	1.141	7.5	8.55	1.05	1	0.28	30000

Caratteristiche del materiale

(Circolare 7 21-01-19 C8.5.I) Muratura in mattoni pieni e malta di calce LC2_Corti

fb_	fhk	fvk0	fhmedio	τ0	fv0	μ	ϕ	fvk,lim	E	G	FC
120000			172500	9000	20000	0.577	0.767	6500	320000000	128000000	1.2

Verifiche a pressoflessione delle travi in muratura in combinazioni non sismiche

Sezione	γM	N	M	Mu	Comb.	c.s.	Verifica

Sezione	γM	N	M	Mu	Comb.	c.s.	Verifica
ini.	3	-1832	-575.81	1566.2	SLU 73	2.72	Si
fin.	3	-1832	560.62	1566.2	SLU 73	2.79	Si
ini.	3	-1850	-514.28	1566.2	SLU 75	3.05	Si
fin.	3	-1850	522.61	1566.2	SLU 75	3	Si
ini.	3	-1661	-534.34	1566.2	SLU 52	2.93	Si
fin.	3	-1661	512.83	1566.2	SLU 52	3.05	Si
ini.	3	-1927	-529.26	1566.2	SLU 84	2.96	Si
fin.	3	-1927	531.85	1566.2	SLU 84	2.94	Si
ini.	3	-1855	-533.12	1566.2	SLU 83	2.94	Si
fin.	3	-1855	537.03	1566.2	SLU 83	2.92	Si
ini.	3	-1778	-518.14	1566.2	SLU 74	3.02	Si
fin.	3	-1778	527.79	1566.2	SLU 74	2.97	Si
ini.	3	-1611	-570.05	1566.2	SLU 60	2.75	Si
fin.	3	-1611	548.94	1566.2	SLU 60	2.85	Si
ini.	3	-1783	-611.52	1566.2	SLU 81	2.56	Si
fin.	3	-1783	596.74	1566.2	SLU 81	2.62	Si
ini.	3	-1854	-607.66	1566.2	SLU 82	2.58	Si
fin.	3	-1854	591.56	1566.2	SLU 82	2.65	Si
ini.	3	-1683	-566.19	1566.2	SLU 61	2.77	Si
fin.	3	-1683	543.76	1566.2	SLU 61	2.88	Si

Verifiche a taglio delle travi in muratura secondo §C8.7.1.3.1 in combinazioni non sismiche

Sezione	γM	N	M	V	Vt	Vp	Vt fess. diag.	Vt,lim	Comb.	c.s.	Verifica
ini.	3	-1778	-518.14	1931			1844	715	SLU 74	0.37	No
fin.	3	-1778	527.79	161			1844	715	SLU 74	4.44	Si
ini.	3	-1854	-607.66	2157			1874	725	SLU 82	0.34	No
fin.	3	-1854	591.56	241			1874	725	SLU 82	3	Si
ini.	3	-1611	-570.05	1958			1777	693	SLU 60	0.35	No
fin.	3	-1611	548.94	280			1777	693	SLU 60	2.47	Si
ini.	3	-1510	-513.43	1869			1736	679	SLU 39	0.36	No
fin.	3	-1510	503.8	165			1736	679	SLU 39	4.11	Si
ini.	3	-1581	-509.57	1860			1765	689	SLU 40	0.37	No
fin.	3	-1581	498.62	156			1765	689	SLU 40	4.41	Si
ini.	3	-1927	-529.26	2019			1903	734	SLU 84	0.36	No
fin.	3	-1927	531.85	103			1903	734	SLU 84	7.11	Si
ini.	3	-1832	-575.81	2022			1865	722	SLU 73	0.36	No
fin.	3	-1832	560.62	252			1865	722	SLU 73	2.87	Si
ini.	3	-1683	-566.19	1949			1805	702	SLU 61	0.36	No
fin.	3	-1683	543.76	271			1805	702	SLU 61	2.59	Si
ini.	3	-1855	-533.12	2028			1874	725	SLU 83	0.36	No
fin.	3	-1855	537.03	112			1874	725	SLU 83	6.46	Si
ini.	3	-1783	-611.52	2166			1845	715	SLU 81	0.33	No
fin.	3	-1783	596.74	250			1845	715	SLU 81	2.86	Si

Verifiche a pressoflessione delle travi in muratura in combinazioni sismiche

Sezione	γM	N	M	Mu	Comb.	c.s.	Verifica
ini.	2	-857	6132.48	2349.3	SLV 2	0.38	No
fin.	2	-700	-6020.95	2349.3	SLV 2	0.39	No
ini.	2	-857	6132.48	2349.3	SLV 1	0.38	No
fin.	2	-700	-6020.95	2349.3	SLV 1	0.39	No
ini.	2	-1369	-6654.76	2349.3	SLV 13	0.35	No
fin.	2	-818	6828.08	2349.3	SLV 13	0.34	No
ini.	2	-1573	-2805.8	2349.3	SLV 12	0.84	No
fin.	2	-2693	2299.78	2349.3	SLV 12	1.02	Si
ini.	2	-1369	-6654.76	2349.3	SLV 14	0.35	No
fin.	2	-818	6828.08	2349.3	SLV 14	0.34	No
ini.	2	-1034	5843.29	2349.3	SLV 4	0.4	No
fin.	2	-1585	-6035.32	2349.3	SLV 4	0.39	No
ini.	2	-1546	-6943.95	2349.3	SLV 15	0.34	No
fin.	2	-1702	6813.7	2349.3	SLV 15	0.34	No
ini.	2	-1034	5843.29	2349.3	SLV 3	0.4	No
fin.	2	-1585	-6035.32	2349.3	SLV 3	0.39	No
ini.	2	-1546	-6943.95	2349.3	SLV 16	0.34	No
fin.	2	-1702	6813.7	2349.3	SLV 16	0.34	No
ini.	2	-1573	-2805.8	2349.3	SLV 11	0.84	No
fin.	2	-2693	2299.78	2349.3	SLV 11	1.02	Si

Verifiche a taglio delle travi in muratura secondo §C8.7.1.3.1 in combinazioni sismiche

Sezione	γM	N	M	V	Vt	Vp	Vt fess. diag.	Vt,lim	Comb.	c.s.	Verifica
ini.	2	-1546	-6943.95	14449			2317	915	SLV 16	0.06	No
fin.	2	-1702	6813.7	13252			2379	939	SLV 16	0.07	No
ini.	2	-829	1994.33	-3040			2030	799	SLV 5	0.26	No
fin.	2	291	-1507.02	-4001			1698	572	SLV 5	0.14	No
ini.	2	-857	6132.48	-11701			2041	804	SLV 1	0.07	No
fin.	2	-700	-6020.95	-12792			1979	777	SLV 1	0.06	No
ini.	2	-1369	-6654.76	14125			2246	888	SLV 13	0.06	No
fin.	2	-818	6828.08	13038			2025	797	SLV 13	0.06	No
ini.	2	-857	6132.48	-11701			2041	804	SLV 2	0.07	No
fin.	2	-700	-6020.95	-12792			1979	777	SLV 2	0.06	No
ini.	2	-1034	5843.29	-11376			2112	834	SLV 4	0.07	No
fin.	2	-1585	-6035.32	-12577			2332	921	SLV 4	0.07	No
ini.	2	-1034	5843.29	-11376			2112	834	SLV 3	0.07	No
fin.	2	-1585	-6035.32	-12577			2332	921	SLV 3	0.07	No
ini.	2	-1546	-6943.95	14449			2317	915	SLV 15	0.06	No
fin.	2	-1702	6813.7	13252			2379	939	SLV 15	0.07	No
ini.	2	-1369	-6654.76	14125			2246	888	SLV 14	0.06	No
fin.	2	-818	6828.08	13038			2025	797	SLV 14	0.06	No
ini.	2	-829	1994.33	-3040			2030	799	SLV 6	0.26	No
fin.	2	291	-1507.02	-4001			1698	572	SLV 6	0.14	No

Tabella dei coefficienti di sicurezza minimi

Stato limite	Coeff.s.	Comb.	Verifica
PF_SLV	0.338	SLV 15	No
V_SLV	0.061	SLV 1	No
PF_SLU	2.561	SLU 81	Si
V_SLU	0.33	SLU 81	No

Trave di accoppiamento 89

Verifiche condotte secondo D.M. 17-01-18 (N.T.C.)

Dati geometrici

X ini.	Y ini.	Z ini.inf.	Z ini.sup.	H ini.	X fin.	Y fin.	Z fin.inf.	Z fin.sup	H fin.	Luce	Spessore	R. Trazione
-4.13	1.141	7.1	8.55	1.45	-4.93	1.141	7.1	8.55	1.45	0.8	0.28	30000

Caratteristiche del materiale

(Circolare 7 21-01-19 C8.5.I) Muratura in mattoni pieni e malta di calce LC2_Corti

fb_	fhk	fvk0	fhmedio	τ0	fv0	μ	ϕ	fvk,lim	E	G	FC
120000			172500	9000	20000	0.577	0.767	6500	320000000	128000000	1.2

Verifiche a pressoflessione delle travi in muratura in combinazioni non sismiche

Sezione	γM	N	M	Mu	Comb.	c.s.	Verifica
ini.	3	-3299	-658.51	2986.79	SLU 56	4.54	Si
fin.	3	-3299	344.21	2986.79	SLU 56	8.68	Si
ini.	3	-2938	-665.65	2986.79	SLU 35	4.49	Si
fin.	3	-2938	418.93	2986.79	SLU 35	7.13	Si
ini.	3	-3613	-679.37	2986.79	SLU 80	4.4	Si
fin.	3	-3613	364.97	2986.79	SLU 80	8.18	Si
ini.	3	-3581	-725.77	2986.79	SLU 79	4.12	Si
fin.	3	-3581	416.46	2986.79	SLU 79	7.17	Si
ini.	3	-3776	-665.67	2986.79	SLU 83	4.49	Si
fin.	3	-3776	367.07	2986.79	SLU 83	8.14	Si
ini.	3	-3575	-744.71	2986.79	SLU 77	4.01	Si
fin.	3	-3575	429.85	2986.79	SLU 77	6.95	Si
ini.	3	-3240	-702.56	2986.79	SLU 69	4.25	Si
fin.	3	-3240	383.12	2986.79	SLU 69	7.8	Si
ini.	3	-3627	-666.54	2986.79	SLU 74	4.48	Si
fin.	3	-3627	360.43	2986.79	SLU 74	8.29	Si
ini.	3	-3607	-698.31	2986.79	SLU 78	4.28	Si
fin.	3	-3607	378.36	2986.79	SLU 78	7.89	Si
ini.	3	-3247	-683.62	2986.79	SLU 71	4.37	Si
fin.	3	-3247	369.73	2986.79	SLU 71	8.08	Si

Verifiche a taglio delle travi in muratura secondo §C8.7.1.3.1 in combinazioni non sismiche

Sezione	γM	N	M	V	Vt	Vp	Vt fess. diag.	Vt,lim	Comb.	c.s.	Verifica
ini.	3	-2938	-665.65	2479			2739	1048	SLU 35	0.42	No
fin.	3	-2938	418.93	288			2739	1048	SLU 35	3.63	Si
ini.	3	-3575	-744.71	2717			2994	1123	SLU 77	0.41	No
fin.	3	-3575	429.85	295			2994	1123	SLU 77	3.81	Si
ini.	3	-2945	-646.71	2439			2741	1049	SLU 37	0.43	No
fin.	3	-2945	405.54	248			2741	1049	SLU 37	4.23	Si
ini.	3	-3627	-666.54	2532			3014	1129	SLU 74	0.45	No
fin.	3	-3627	360.43	110			3014	1129	SLU 74	10.25	Si
ini.	3	-3581	-725.77	2676			2996	1124	SLU 79	0.42	No
fin.	3	-3581	416.46	254			2996	1124	SLU 79	4.42	Si
ini.	3	-3776	-665.67	2649			3074	1146	SLU 83	0.43	No
fin.	3	-3776	367.07	8			3074	1146	SLU 83	145.5	Si
ini.	3	-2971	-619.25	2357			2752	1052	SLU 36	0.45	No
fin.	3	-2971	367.43	166			2752	1052	SLU 36	6.33	Si
ini.	3	-3613	-679.37	2554			3009	1127	SLU 80	0.44	No
fin.	3	-3613	364.97	132			3009	1127	SLU 80	8.55	Si
ini.	3	-3140	-586.61	2411			2819	1072	SLU 41	0.44	No
fin.	3	-3140	356.14	2			2819	1072	SLU 41	605.24	Si
ini.	3	-3607	-698.31	2594			3006	1127	SLU 78	0.43	No
fin.	3	-3607	378.36	172			3006	1127	SLU 78	6.54	Si

Verifiche a pressoflessione delle travi in muratura in combinazioni sismiche

Sezione	γM	N	M	Mu	Comb.	c.s.	Verifica
ini.	2	-2709	-3105.02	4480.18	SLV 9	1.44	Si
fin.	2	-2474	2601.46	4480.18	SLV 9	1.72	Si
ini.	2	-3341	-4813.17	4480.18	SLV 15	0.93	No
fin.	2	-2968	4229.59	4480.18	SLV 15	1.06	Si
ini.	2	-3274	-5573.89	4480.18	SLV 13	0.8	No
fin.	2	-2834	4896.8	4480.18	SLV 13	0.91	No
ini.	2	-3341	-4813.17	4480.18	SLV 16	0.93	No
fin.	2	-2968	4229.59	4480.18	SLV 16	1.06	Si
ini.	2	-3274	-5573.89	4480.18	SLV 14	0.8	No
fin.	2	-2834	4896.8	4480.18	SLV 14	0.91	No
ini.	2	-1883	4015.75	4480.18	SLV 1	1.12	Si
fin.	2	-2256	-3885.34	4480.18	SLV 1	1.15	Si
ini.	2	-1883	4015.75	4480.18	SLV 2	1.12	Si
fin.	2	-2256	-3885.34	4480.18	SLV 2	1.15	Si
ini.	2	-2709	-3105.02	4480.18	SLV 10	1.44	Si
fin.	2	-2474	2601.46	4480.18	SLV 10	1.72	Si
ini.	2	-1950	4776.47	4480.18	SLV 3	0.94	No
fin.	2	-2391	-4552.54	4480.18	SLV 3	0.98	No
ini.	2	-1950	4776.47	4480.18	SLV 4	0.94	No

Sezione	γM	N	M	Mu	Comb.	c.s.	Verifica
fin.	2	-2391	-4552.54	4480.18	SLV 4	0.98	No

Verifiche a taglio delle travi in muratura secondo §C8.7.1.3.1 in combinazioni sismiche

Sezione	γM	N	M	V	Vt	Vp	Vt fess. diag.	Vt,lim	Comb.	c.s.	Verifica
ini.	2	-3341	-4813.17	12280			3682	1436	SLV 16	0.12	No
fin.	2	-2968	4229.59	10797			3533	1385	SLV 16	0.13	No
ini.	2	-2709	-3105.02	8128			3429	1349	SLV 9	0.17	No
fin.	2	-2474	2601.46	6458			3335	1315	SLV 9	0.2	No
ini.	2	-3274	-5573.89	14147			3655	1427	SLV 14	0.1	No
fin.	2	-2834	4896.8	12576			3479	1366	SLV 14	0.11	No
ini.	2	-2709	-3105.02	8128			3429	1349	SLV 10	0.17	No
fin.	2	-2474	2601.46	6458			3335	1315	SLV 10	0.2	No
ini.	2	-1883	4015.75	-9272			3099	1225	SLV 2	0.13	No
fin.	2	-2256	-3885.34	-10835			3248	1282	SLV 2	0.12	No
ini.	2	-1950	4776.47	-11138			3125	1236	SLV 3	0.11	No
fin.	2	-2391	-4552.54	-12614			3302	1302	SLV 3	0.1	No
ini.	2	-1883	4015.75	-9272			3099	1225	SLV 1	0.13	No
fin.	2	-2256	-3885.34	-10835			3248	1282	SLV 1	0.12	No
ini.	2	-1950	4776.47	-11138			3125	1236	SLV 4	0.11	No
fin.	2	-2391	-4552.54	-12614			3302	1302	SLV 4	0.1	No
ini.	2	-3274	-5573.89	14147			3655	1427	SLV 13	0.1	No
fin.	2	-2834	4896.8	12576			3479	1366	SLV 13	0.11	No
ini.	2	-3341	-4813.17	12280			3682	1436	SLV 15	0.12	No
fin.	2	-2968	4229.59	10797			3533	1385	SLV 15	0.13	No

Tabella dei coefficienti di sicurezza minimi

Stato limite	Coeff.s.	Comb.	Verifica
PF_SLV	0.804	SLV 13	No
V_SLV	0.101	SLV 13	No
PF_SLU	4.011	SLU 77	Si
V_SLU	0.413	SLU 77	No

Trave di accoppiamento 90

Verifiche condotte secondo D.M. 17-01-18 (N.T.C.)

Dati geometrici

X ini.	Y ini.	Z ini.inf.	Z ini.sup.	H ini.	X fin.	Y fin.	Z fin.inf.	Z fin.sup	H fin.	Luce	Spessore	R. Trazione
-9.94	3.3	6.9	8.55	1.65	-10.74	3.3	6.9	8.55	1.65	0.8	0.14	30000

Caratteristiche del materiale

(Circolare 7 21-01-19 C8.5.I) Muratura in mattoni pieni e malta di calce LC2_Corti

fb_	fhk	fvk0	fhmedio	τ0	fv0	μ	ϕ	fvk,lim	E	G	FC
120000			172500	9000	20000	0.577	0.767	6500	320000000	128000000	1.2

Verifiche a pressoflessione delle travi in muratura in combinazioni non sismiche

Sezione	γM	N	M	Mu	Comb.	c.s.	Verifica
ini.	3	34	89.73	1933.78	SLU 45	21.55	Si
fin.	3	34	-965.06	1933.78	SLU 45	2	Si
ini.	3	32	89.19	1933.78	SLU 47	21.68	Si
fin.	3	32	-979.42	1933.78	SLU 47	1.97	Si
ini.	3	34	89.8	1933.78	SLU 46	21.53	Si
fin.	3	34	-961.69	1933.78	SLU 46	2.01	Si
ini.	3	30	87.35	1933.78	SLU 51	22.14	Si
fin.	3	30	-1061.91	1933.78	SLU 51	1.82	Si
ini.	3	39	131.52	1933.78	SLU 69	14.7	Si
fin.	3	39	-907.48	1933.78	SLU 69	2.13	Si
ini.	3	37	130.85	1933.78	SLU 71	14.78	Si
fin.	3	37	-927.46	1933.78	SLU 71	2.09	Si
ini.	3	32	87.94	1933.78	SLU 48	21.99	Si
fin.	3	32	-1045.3	1933.78	SLU 48	1.85	Si
ini.	3	30	87.27	1933.78	SLU 50	22.16	Si
fin.	3	30	-1065.28	1933.78	SLU 50	1.82	Si
ini.	3	37	130.93	1933.78	SLU 72	14.77	Si
fin.	3	37	-924.09	1933.78	SLU 72	2.09	Si
ini.	3	33	88.01	1933.78	SLU 49	21.97	Si
fin.	3	33	-1041.93	1933.78	SLU 49	1.86	Si

Verifiche a taglio delle travi in muratura secondo §C8.7.1.3.1 in combinazioni non sismiche

Sezione	γM	N	M	V	Vt	Vp	Vt fess. diag.	Vt,lim	Comb.	c.s.	Verifica
ini.	3	32	87.94	-1088			890	328	SLU 48	0.3	No
fin.	3	32	-1045.3	-1789			890	328	SLU 48	0.18	No
ini.	3	37	130.93	-899			890	327	SLU 72	0.36	No
fin.	3	37	-924.09	-1783			890	327	SLU 72	0.18	No
ini.	3	30	87.35	-1108			890	328	SLU 51	0.3	No
fin.	3	30	-1061.91	-1809			890	328	SLU 51	0.18	No
ini.	3	33	88.01	-1084			890	328	SLU 49	0.3	No
fin.	3	33	-1041.93	-1785			890	328	SLU 49	0.18	No
ini.	3	34	89.73	-990			890	327	SLU 45	0.33	No
fin.	3	34	-965.06	-1691			890	327	SLU 45	0.19	No
ini.	3	37	130.85	-903			890	327	SLU 71	0.36	No
fin.	3	37	-927.46	-1787			890	327	SLU 71	0.18	No
ini.	3	32	89.19	-1007			890	328	SLU 47	0.33	No
fin.	3	32	-979.42	-1708			890	328	SLU 47	0.19	No
ini.	3	39	131.52	-879			890	326	SLU 69	0.37	No
fin.	3	39	-907.48	-1763			890	326	SLU 69	0.18	No

Sezione	γM	N	M	V	Vt	Vp	Vt fess. diag.	Vt,lim	Comb.	c.s.	Verifica
ini.	3	30	87.27	-1112			890	328	SLU 50	0.3	No
fin.	3	30	-1065.28	-1813			890	328	SLU 50	0.18	No
ini.	3	40	131.59	-874			890	326	SLU 70	0.37	No
fin.	3	40	-904.11	-1759			890	326	SLU 70	0.19	No

Verifiche a pressoflessione delle travi in muratura in combinazioni sismiche

Sezione	γM	N	M	Mu	Comb.	c.s.	Verifica
ini.	2	-594	-105.6	2900.66	SLV 4	27.47	Si
fin.	2	-645	-4956.06	2900.66	SLV 4	0.59	No
ini.	2	-514	-161.75	2900.66	SLV 1	17.93	Si
fin.	2	-618	-5282.87	2900.66	SLV 1	0.55	No
ini.	2	657	327.04	2900.66	SLV 14	8.87	Si
fin.	2	708	3875.38	2900.66	SLV 14	0.75	No
ini.	2	-11	-56.19	2900.66	SLV 5	51.62	Si
fin.	2	-123	-2458.76	2900.66	SLV 5	1.18	Si
ini.	2	657	327.04	2900.66	SLV 13	8.87	Si
fin.	2	708	3875.38	2900.66	SLV 13	0.75	No
ini.	2	577	383.2	2900.66	SLV 16	7.57	Si
fin.	2	681	4202.18	2900.66	SLV 16	0.69	No
ini.	2	577	383.2	2900.66	SLV 15	7.57	Si
fin.	2	681	4202.18	2900.66	SLV 15	0.69	No
ini.	2	-514	-161.75	2900.66	SLV 2	17.93	Si
fin.	2	-618	-5282.87	2900.66	SLV 2	0.55	No
ini.	2	-594	-105.6	2900.66	SLV 3	27.47	Si
fin.	2	-645	-4956.06	2900.66	SLV 3	0.59	No
ini.	2	-11	-56.19	2900.66	SLV 6	51.62	Si
fin.	2	-123	-2458.76	2900.66	SLV 6	1.18	Si

Verifiche a taglio delle travi in muratura secondo §C8.7.1.3.1 in combinazioni sismiche

Sezione	γM	N	M	V	Vt	Vp	Vt fess. diag.	Vt,lim	Comb.	c.s.	Verifica
ini.	2	577	383.2	5300			1334	355	SLV 15	0.07	No
fin.	2	681	4202.18	4601			1334	322	SLV 15	0.07	No
ini.	2	-514	-161.75	-6256			1540	604	SLV 2	0.1	No
fin.	2	-618	-5282.87	-6968			1582	622	SLV 2	0.09	No
ini.	2	577	383.2	5300			1334	355	SLV 16	0.07	No
fin.	2	681	4202.18	4601			1334	322	SLV 16	0.07	No
ini.	2	657	327.04	5015			1334	330	SLV 13	0.07	No
fin.	2	708	3875.38	4248			1334	313	SLV 13	0.07	No
ini.	2	-11	-56.19	-2643			1339	504	SLV 5	0.19	No
fin.	2	-123	-2458.76	-3454			1383	528	SLV 5	0.15	No
ini.	2	-594	-105.6	-5970			1572	618	SLV 4	0.1	No
fin.	2	-645	-4956.06	-6616			1592	627	SLV 4	0.09	No
ini.	2	657	327.04	5015			1334	330	SLV 14	0.07	No
fin.	2	708	3875.38	4248			1334	313	SLV 14	0.07	No
ini.	2	-11	-56.19	-2643			1339	504	SLV 6	0.19	No
fin.	2	-123	-2458.76	-3454			1383	528	SLV 6	0.15	No
ini.	2	-594	-105.6	-5970			1572	618	SLV 3	0.1	No
fin.	2	-645	-4956.06	-6616			1592	627	SLV 3	0.09	No
ini.	2	-514	-161.75	-6256			1540	604	SLV 1	0.1	No
fin.	2	-618	-5282.87	-6968			1582	622	SLV 1	0.09	No

Tabella dei coefficienti di sicurezza minimi

Stato limite	Coeff.s.	Comb.	Verifica
PF_SLV	0.549	SLV 1	No
V_SLV	0.066	SLV 13	No
PF_SLU	1.815	SLU 50	Si
V_SLU	0.181	SLU 50	No

Trave di accoppiamento 91

Verifiche condotte secondo D.M. 17-01-18 (N.T.C.)

Dati geometrici

X ini.	Y ini.	Z ini.inf.	Z ini.sup.	H ini.	X fin.	Y fin.	Z fin.inf.	Z fin.sup	H fin.	Luce	Spessore	R. Trazione
-11.003	0	7.1	8.55	1.45	-11.003	1	7.1	8.55	1.45	1	0.28	30000

Caratteristiche del materiale

(Circolare 7 21-01-19 C8.5.I) Muratura in mattoni pieni e malta di calce LC2_Corti

fb_	fhk	fvk0	fhmedio	τ0	fv0	μ	ϕ	fvk,lim	E	G	FC
120000			172500	9000	20000	0.577	0.767	6500	320000000	128000000	1.2

Verifiche a pressoflessione delle travi in muratura in combinazioni non sismiche

Sezione	γM	N	M	Mu	Comb.	c.s.	Verifica
ini.	3	-36	-3767.01	2986.79	SLU 71	0.79	No
fin.	3	-36	-373.71	2986.79	SLU 71	7.99	Si
ini.	3	-45	-4131.42	2986.79	SLU 79	0.72	No
fin.	3	-45	-414.9	2986.79	SLU 79	7.2	Si
ini.	3	-36	-3792.02	2986.79	SLU 69	0.79	No
fin.	3	-36	-376.55	2986.79	SLU 69	7.93	Si
ini.	3	-47	-4068.45	2986.79	SLU 83	0.73	No
fin.	3	-47	-407.32	2986.79	SLU 83	7.33	Si
ini.	3	-46	-3717.14	2986.79	SLU 84	0.8	No
fin.	3	-46	-365.97	2986.79	SLU 84	8.16	Si
ini.	3	-45	-4156.43	2986.79	SLU 77	0.72	No
fin.	3	-45	-417.75	2986.79	SLU 77	7.15	Si
ini.	3	-44	-3780.11	2986.79	SLU 80	0.79	No

Sezione	γM	N	M	Mu	Comb.	c.s.	Verifica
fin.	3	-44	-373.55	2986.79	SLU 80	8	Si
ini.	3	-45	-3849.31	2986.79	SLU 81	0.78	No
fin.	3	-45	-382.09	2986.79	SLU 81	7.82	Si
ini.	3	-43	-3937.29	2986.79	SLU 74	0.76	No
fin.	3	-43	-392.52	2986.79	SLU 74	7.61	Si
ini.	3	-45	-3805.12	2986.79	SLU 78	0.78	No
fin.	3	-45	-376.4	2986.79	SLU 78	7.94	Si

Verifiche a taglio delle travi in muratura secondo §C8.7.1.3.1 in combinazioni non sismiche

Sezione	γM	N	M	V	Vt	Vp	Vt fess. diag.	Vt,lim	Comb.	c.s.	Verifica
ini.	3	-36	-3767.01	3881			1578	596	SLU 71	0.15	No
fin.	3	-36	-373.71	2918			1578	596	SLU 71	0.2	No
ini.	3	-46	-3717.14	3839			1582	598	SLU 84	0.16	No
fin.	3	-46	-365.97	2876			1582	598	SLU 84	0.21	No
ini.	3	-43	-3937.29	4033			1581	598	SLU 74	0.15	No
fin.	3	-43	-392.52	3070			1581	598	SLU 74	0.19	No
ini.	3	-45	-4156.43	4227			1582	598	SLU 77	0.14	No
fin.	3	-45	-417.75	3264			1582	598	SLU 77	0.18	No
ini.	3	-47	-4068.45	4149			1582	598	SLU 83	0.14	No
fin.	3	-47	-407.32	3186			1582	598	SLU 83	0.19	No
ini.	3	-44	-3780.11	3895			1581	598	SLU 80	0.15	No
fin.	3	-44	-373.55	2932			1581	598	SLU 80	0.2	No
ini.	3	-45	-4131.42	4205			1582	598	SLU 79	0.14	No
fin.	3	-45	-414.9	3242			1582	598	SLU 79	0.18	No
ini.	3	-36	-3792.02	3903			1578	596	SLU 69	0.15	No
fin.	3	-36	-376.55	2941			1578	596	SLU 69	0.2	No
ini.	3	-45	-3849.31	3955			1582	598	SLU 81	0.15	No
fin.	3	-45	-382.09	2992			1582	598	SLU 81	0.2	No
ini.	3	-45	-3805.12	3917			1581	598	SLU 78	0.15	No
fin.	3	-45	-376.4	2954			1581	598	SLU 78	0.2	No

Verifiche a pressoflessione delle travi in muratura in combinazioni sismiche

Sezione	γM	N	M	Mu	Comb.	c.s.	Verifica
ini.	2	-1163	-11074.65	4480.18	SLV 9	0.4	No
fin.	2	-1395	-1064.28	4480.18	SLV 9	4.21	Si
ini.	2	898	4851.21	4480.18	SLV 12	0.92	No
fin.	2	1180	461.58	4480.18	SLV 12	9.71	Si
ini.	2	-949	-9912.45	4480.18	SLV 5	0.45	No
fin.	2	-1231	-951.59	4480.18	SLV 5	4.71	Si
ini.	2	898	4851.21	4480.18	SLV 11	0.92	No
fin.	2	1180	461.58	4480.18	SLV 11	9.71	Si
ini.	2	1112	6013.41	4480.18	SLV 7	0.75	No
fin.	2	1344	574.27	4480.18	SLV 7	7.8	Si
ini.	2	-949	-9912.45	4480.18	SLV 6	0.45	No
fin.	2	-1231	-951.59	4480.18	SLV 6	4.71	Si
ini.	2	-691	-6856.5	4480.18	SLV 13	0.65	No
fin.	2	-685	-661.7	4480.18	SLV 13	6.77	Si
ini.	2	1112	6013.41	4480.18	SLV 8	0.75	No
fin.	2	1344	574.27	4480.18	SLV 8	7.8	Si
ini.	2	-1163	-11074.65	4480.18	SLV 10	0.4	No
fin.	2	-1395	-1064.28	4480.18	SLV 10	4.21	Si
ini.	2	-691	-6856.5	4480.18	SLV 14	0.65	No
fin.	2	-685	-661.7	4480.18	SLV 14	6.77	Si

Verifiche a taglio delle travi in muratura secondo §C8.7.1.3.1 in combinazioni sismiche

Sezione	γM	N	M	V	Vt	Vp	Vt fess. diag.	Vt,lim	Comb.	c.s.	Verifica
ini.	2	-691	-6856.5	5826			2622	1022	SLV 14	0.18	No
fin.	2	-685	-661.7	4922			2619	1021	SLV 14	0.21	No
ini.	2	898	4851.21	-4313			2345	659	SLV 11	0.15	No
fin.	2	1180	461.58	-5099			2345	571	SLV 11	0.11	No
ini.	2	-1163	-11074.65	10226			2810	1107	SLV 10	0.11	No
fin.	2	-1395	-1064.28	9433			2903	1146	SLV 10	0.12	No
ini.	2	898	4851.21	-4313			2345	659	SLV 12	0.15	No
fin.	2	1180	461.58	-5099			2345	571	SLV 12	0.11	No
ini.	2	1112	6013.41	-4904			2345	594	SLV 8	0.12	No
fin.	2	1344	574.27	-5592			2345	513	SLV 8	0.09	No
ini.	2	-691	-6856.5	5826			2622	1022	SLV 13	0.18	No
fin.	2	-685	-661.7	4922			2619	1021	SLV 13	0.21	No
ini.	2	-1163	-11074.65	10226			2810	1107	SLV 9	0.11	No
fin.	2	-1395	-1064.28	9433			2903	1146	SLV 9	0.12	No
ini.	2	-949	-9912.45	9635			2725	1069	SLV 6	0.11	No
fin.	2	-1231	-951.59	8940			2838	1119	SLV 6	0.13	No
ini.	2	-949	-9912.45	9635			2725	1069	SLV 5	0.11	No
fin.	2	-1231	-951.59	8940			2838	1119	SLV 5	0.13	No
ini.	2	1112	6013.41	-4904			2345	594	SLV 7	0.12	No
fin.	2	1344	574.27	-5592			2345	513	SLV 7	0.09	No

Tabella dei coefficienti di sicurezza minimi

Stato limite	Coeff.s.	Comb.	Verifica
PF_SLV	0.405	SLV 9	No
V_SLV	0.092	SLV 7	No
PF_SLU	0.719	SLU 77	No
V_SLU	0.142	SLU 77	No

Trave di accoppiamento 92

Verifiche condotte secondo D.M. 17-01-18 (N.T.C.)

Dati geometrici

X ini.	Y ini.	Z ini.inf.	Z ini.sup.	H ini.	X fin.	Y fin.	Z fin.inf.	Z fin.sup	H fin.	Luce	Spessore	R. Trazione
-9.72	1.426	7.1	8.55	1.45	-9.72	2.226	7.1	8.55	1.45	0.8	0.14	30000

Caratteristiche del materiale

(Circolare 7 21-01-19 C8.5.I) Muratura in mattoni pieni e malta di calce LC2_Corti

fb_	fhk	fvk0	fhmedio	τ0	fv0	μ	ϕ	fvk,lim	E	G	FC
120000			172500	9000	20000	0.577	0.767	6500	320000000	128000000	1.2

Verifiche a pressoflessione delle travi in muratura in combinazioni non sismiche

Sezione	γM	N	M	Mu	Comb.	c.s.	Verifica
ini.	3	58	182.65	1493.39	SLU 74	8.18	Si
fin.	3	58	-3044.68	1493.39	SLU 74	0.49	No
ini.	3	62	186.92	1493.39	SLU 84	7.99	Si
fin.	3	62	-3180.02	1493.39	SLU 84	0.47	No
ini.	3	59	187.6	1493.39	SLU 83	7.96	Si
fin.	3	59	-3184.38	1493.39	SLU 83	0.47	No
ini.	3	55	187.32	1493.39	SLU 78	7.97	Si
fin.	3	55	-3152.71	1493.39	SLU 78	0.47	No
ini.	3	54	186.25	1493.39	SLU 80	8.02	Si
fin.	3	54	-3143.66	1493.39	SLU 80	0.48	No
ini.	3	52	188	1493.39	SLU 77	7.94	Si
fin.	3	52	-3157.07	1493.39	SLU 77	0.47	No
ini.	3	61	181.97	1493.39	SLU 75	8.21	Si
fin.	3	61	-3040.32	1493.39	SLU 75	0.49	No
ini.	3	68	181.57	1493.39	SLU 82	8.22	Si
fin.	3	68	-3067.63	1493.39	SLU 82	0.49	No
ini.	3	51	186.92	1493.39	SLU 79	7.99	Si
fin.	3	51	-3148.02	1493.39	SLU 79	0.47	No
ini.	3	65	182.25	1493.39	SLU 81	8.19	Si
fin.	3	65	-3071.99	1493.39	SLU 81	0.49	No

Verifiche a taglio delle travi in muratura secondo §C8.7.1.3.1 in combinazioni non sismiche

Sezione	γM	N	M	V	Vt	Vp	Vt fess. diag.	Vt,lim	Comb.	c.s.	Verifica
ini.	3	52	188	-3986			782	283	SLU 77	0.07	No
fin.	3	52	-3157.07	-4391			782	283	SLU 77	0.06	No
ini.	3	55	187.32	-3980			782	282	SLU 78	0.07	No
fin.	3	55	-3152.71	-4385			782	282	SLU 78	0.06	No
ini.	3	58	182.65	-3839			782	281	SLU 74	0.07	No
fin.	3	58	-3044.68	-4244			782	281	SLU 74	0.07	No
ini.	3	54	186.25	-3967			782	282	SLU 80	0.07	No
fin.	3	54	-3143.66	-4373			782	282	SLU 80	0.06	No
ini.	3	51	186.92	-3973			782	283	SLU 79	0.07	No
fin.	3	51	-3148.02	-4379			782	283	SLU 79	0.06	No
ini.	3	59	187.6	-4020			782	281	SLU 83	0.07	No
fin.	3	59	-3184.38	-4425			782	281	SLU 83	0.06	No
ini.	3	65	182.25	-3872			782	280	SLU 81	0.07	No
fin.	3	65	-3071.99	-4278			782	280	SLU 81	0.07	No
ini.	3	62	186.92	-4013			782	280	SLU 84	0.07	No
fin.	3	62	-3180.02	-4419			782	280	SLU 84	0.06	No
ini.	3	68	181.57	-3866			782	279	SLU 82	0.07	No
fin.	3	68	-3067.63	-4272			782	279	SLU 82	0.07	No
ini.	3	61	181.97	-3833			782	281	SLU 75	0.07	No
fin.	3	61	-3040.32	-4238			782	281	SLU 75	0.07	No

Verifiche a pressoflessione delle travi in muratura in combinazioni sismiche

Sezione	γM	N	M	Mu	Comb.	c.s.	Verifica
ini.	2	-1379	878.68	2240.09	SLV 8	2.55	Si
fin.	2	-1727	-7395.78	2240.09	SLV 8	0.3	No
ini.	2	1472	-628.23	2240.09	SLV 10	3.57	Si
fin.	2	1820	3374.44	2240.09	SLV 10	0.66	No
ini.	2	-1379	878.68	2240.09	SLV 7	2.55	Si
fin.	2	-1727	-7395.78	2240.09	SLV 7	0.3	No
ini.	2	-323	391.94	2240.09	SLV 3	5.72	Si
fin.	2	-531	-5231.43	2240.09	SLV 3	0.43	No
ini.	2	-1417	851.86	2240.09	SLV 12	2.63	Si
fin.	2	-1696	-6337.39	2240.09	SLV 12	0.35	No
ini.	2	-1417	851.86	2240.09	SLV 11	2.63	Si
fin.	2	-1696	-6337.39	2240.09	SLV 11	0.35	No
ini.	2	544	-52.09	2240.09	SLV 2	43.01	Si
fin.	2	524	-2317.88	2240.09	SLV 2	0.97	No
ini.	2	1472	-628.23	2240.09	SLV 9	3.57	Si
fin.	2	1820	3374.44	2240.09	SLV 9	0.66	No
ini.	2	544	-52.09	2240.09	SLV 1	43.01	Si
fin.	2	524	-2317.88	2240.09	SLV 1	0.97	No
ini.	2	-323	391.94	2240.09	SLV 4	5.72	Si
fin.	2	-531	-5231.43	2240.09	SLV 4	0.43	No

Verifiche a taglio delle travi in muratura secondo §C8.7.1.3.1 in combinazioni sismiche

Sezione	γM	N	M	V	Vt	Vp	Vt fess. diag.	Vt,lim	Comb.	c.s.	Verifica
ini.	2	-323	391.94	-6690			1302	507	SLV 3	0.08	No
fin.	2	-531	-5231.43	-6973			1385	545	SLV 3	0.08	No
ini.	2	1472	-628.23	4777			1173	0	SLV 10	0	No
fin.	2	1820	3374.44	4368			1173	0	SLV 10	0	No
ini.	2	-323	391.94	-6690			1302	507	SLV 4	0.08	No
fin.	2	-531	-5231.43	-6973			1385	545	SLV 4	0.08	No
ini.	2	1472	-628.23	4777			1173	0	SLV 9	0	No
fin.	2	1820	3374.44	4368			1173	0	SLV 9	0	No
ini.	2	1511	-601.41	3472			1173	0	SLV 5	0	No

Sezione	γM	N	M	V	Vt	Vp	Vt fess. diag.	Vt,lim	Comb.	c.s.	Verifica
fin.	2	1790	2316.05	3059			1173	0	SLV 5	0	No
ini.	2	1511	-601.41	3472			1173	0	SLV 6	0	No
fin.	2	1790	2316.05	3059			1173	0	SLV 6	0	No
ini.	2	-1379	878.68	-9821			1724	678	SLV 8	0.07	No
fin.	2	-1727	-7395.78	-10026			1863	725	SLV 8	0.07	No
ini.	2	-1417	851.86	-8516			1740	683	SLV 11	0.08	No
fin.	2	-1696	-6337.39	-8717			1851	721	SLV 11	0.08	No
ini.	2	-1379	878.68	-9821			1724	678	SLV 7	0.07	No
fin.	2	-1727	-7395.78	-10026			1863	725	SLV 7	0.07	No
ini.	2	-1417	851.86	-8516			1740	683	SLV 12	0.08	No
fin.	2	-1696	-6337.39	-8717			1851	721	SLV 12	0.08	No

Tabella dei coefficienti di sicurezza minimi

Stato limite	Coeff.s.	Comb.	Verifica
PF_SLV	0.303	SLV 7	No
V_SLV	0	SLV 5	No
PF_SLU	0.469	SLU 83	No
V_SLU	0.063	SLU 84	No

Trave di accoppiamento 93

Verifiche condotte secondo D.M. 17-01-18 (N.T.C.)

Dati geometrici

X ini.	Y ini.	Z ini.inf.	Z ini.sup.	H ini.	X fin.	Y fin.	Z fin.inf.	Z fin.sup	H fin.	Luce	Spessore	R. Trazione
-9.867	-4.697	8.11	8.55	0.44	-8.027	-4.697	8.11	8.55	0.44	1.84	0.3	30000

Caratteristiche del materiale

(Circolare 7 21-01-19 C8.5.I) Muratura in mattoni pieni e malta di calce LC2_Corti

fb_	fhk	fvk0	fhmedio	τ0	fv0	μ	ϕ	fvk,lim	E	G	FC
120000			172500	9000	20000	0.577	0.767	6500	320000000	128000000	1.2

Verifiche a pressoflessione delle travi in muratura in combinazioni non sismiche

Sezione	γM	N	M	Mu	Comb.	c.s.	Verifica
ini.	3	775	-412.29	294.67	SLU 84	0.71	No
fin.	3	-464	77.88	294.67	SLU 84	3.78	Si
ini.	3	760	-404.53	294.67	SLU 82	0.73	No
fin.	3	-459	76.1	294.67	SLU 82	3.87	Si
ini.	3	731	-388.55	294.67	SLU 75	0.76	No
fin.	3	-450	78.81	294.67	SLU 75	3.74	Si
ini.	3	747	-397.77	294.67	SLU 80	0.74	No
fin.	3	-453	80.09	294.67	SLU 80	3.68	Si
ini.	3	738	-373.31	294.67	SLU 79	0.79	No
fin.	3	-391	65.45	294.67	SLU 79	4.5	Si
ini.	3	745	-396.31	294.67	SLU 78	0.74	No
fin.	3	-455	80.59	294.67	SLU 78	3.66	Si
ini.	3	739	-406.32	294.67	SLU 76	0.73	No
fin.	3	-490	88.07	294.67	SLU 76	3.35	Si
ini.	3	765	-387.83	294.67	SLU 83	0.76	No
fin.	3	-402	63.24	294.67	SLU 83	4.66	Si
ini.	3	724	-398.56	294.67	SLU 73	0.74	No
fin.	3	-485	86.29	294.67	SLU 73	3.41	Si
ini.	3	751	-380.08	294.67	SLU 81	0.78	No
fin.	3	-397	61.46	294.67	SLU 81	4.79	Si

Verifiche a taglio delle travi in muratura secondo §C8.7.1.3.1 in combinazioni non sismiche

Sezione	γM	N	M	V	Vt	Vp	Vt fess. diag.	Vt,lim	Comb.	c.s.	Verifica
ini.	3	639	-352.96	296			339	0	SLU 55	0	No
fin.	3	-447	84.04	-159			458	181	SLU 55	1.14	Si
ini.	3	631	-335.19	284			339	0	SLU 54	0	No
fin.	3	-407	74.79	-184			447	177	SLU 54	0.96	No
ini.	3	661	-351.17	332			339	0	SLU 61	0	No
fin.	3	-416	72.08	-220			450	178	SLU 61	0.81	No
ini.	3	646	-342.95	279			339	0	SLU 57	0	No
fin.	3	-412	76.57	-176			449	177	SLU 57	1.01	Si
ini.	3	636	-318.49	263			339	0	SLU 56	0	No
fin.	3	-349	61.93	-212			432	171	SLU 56	0.81	No
ini.	3	652	-326.71	317			339	0	SLU 60	0	No
fin.	3	-354	57.44	-255			433	171	SLU 60	0.67	No
ini.	3	648	-344.41	280			339	0	SLU 59	0	No
fin.	3	-410	76.06	-175			448	177	SLU 59	1.01	Si
ini.	3	622	-310.73	269			339	0	SLU 53	0	No
fin.	3	-344	60.15	-219			431	170	SLU 53	0.78	No
ini.	3	639	-319.95	265			339	0	SLU 58	0	No
fin.	3	-348	61.42	-211			432	171	SLU 58	0.81	No
ini.	3	683	-368.1	392			339	0	SLU 42	0	No
fin.	3	-407	65.36	-234			447	177	SLU 42	0.76	No

Verifiche a pressoflessione delle travi in muratura in combinazioni sismiche

Sezione	γM	N	M	Mu	Comb.	c.s.	Verifica
ini.	2	1043	-882.07	442.01	SLV 3	0.5	No
fin.	2	-1647	408.65	442.01	SLV 3	1.08	Si
ini.	2	-90	405.34	442.01	SLV 14	1.09	Si
fin.	2	1117	-314.24	442.01	SLV 14	1.41	Si
ini.	2	761	-756.42	442.01	SLV 8	0.58	No
fin.	2	-1877	260.06	442.01	SLV 8	1.7	Si

Sezione	γM	N	M	Mu	Comb.	c.s.	Verifica
ini.	2	-90	405.34	442.01	SLV 13	1.09	Si
fin.	2	1117	-314.24	442.01	SLV 13	1.41	Si
ini.	2	1043	-882.07	442.01	SLV 4	0.5	No
fin.	2	-1647	408.65	442.01	SLV 4	1.08	Si
ini.	2	967	-667.82	442.01	SLV 1	0.66	No
fin.	2	-858	339.79	442.01	SLV 1	1.3	Si
ini.	2	761	-756.42	442.01	SLV 7	0.58	No
fin.	2	-1877	260.06	442.01	SLV 7	1.7	Si
ini.	2	444	-434.48	442.01	SLV 12	1.02	Si
fin.	2	-1284	63.85	442.01	SLV 12	6.92	Si
ini.	2	967	-667.82	442.01	SLV 2	0.66	No
fin.	2	-858	339.79	442.01	SLV 2	1.3	Si
ini.	2	444	-434.48	442.01	SLV 11	1.02	Si
fin.	2	-1284	63.85	442.01	SLV 11	6.92	Si

Verifiche a taglio delle travi in muratura secondo §C8.7.1.3.1 in combinazioni sismiche

Sezione	γM	N	M	V	Vt	Vp	Vt fess. diag.	Vt,lim	Comb.	c.s.	Verifica
ini.	2	967	-667.82	344			508	0	SLV 2	0	No
fin.	2	-858	339.79	155			737	290	SLV 2	1.87	Si
ini.	2	191	279.69	-158			508	161	SLV 9	1.02	Si
fin.	2	1347	-165.66	-675			508	0	SLV 9	0	No
ini.	2	761	-756.42	582			508	0	SLV 8	0	No
fin.	2	-1877	260.06	342			1009	375	SLV 8	1.1	Si
ini.	2	967	-667.82	344			508	0	SLV 1	0	No
fin.	2	-858	339.79	155			737	290	SLV 1	1.87	Si
ini.	2	191	279.69	-158			508	161	SLV 10	1.02	Si
fin.	2	1347	-165.66	-675			508	0	SLV 10	0	No
ini.	2	1043	-882.07	526			508	0	SLV 4	0	No
fin.	2	-1647	408.65	382			948	358	SLV 4	0.94	No
ini.	2	508	-42.26	-25			508	92	SLV 6	3.72	Si
fin.	2	754	30.55	-414			508	0	SLV 6	0	No
ini.	2	1043	-882.07	526			508	0	SLV 3	0	No
fin.	2	-1647	408.65	382			948	358	SLV 3	0.94	No
ini.	2	508	-42.26	-25			508	92	SLV 5	3.72	Si
fin.	2	754	30.55	-414			508	0	SLV 5	0	No
ini.	2	761	-756.42	582			508	0	SLV 7	0	No
fin.	2	-1877	260.06	342			1009	375	SLV 7	1.1	Si

Tabella dei coefficienti di sicurezza minimi

Stato limite	Coeff.s.	Comb.	Verifica
PF_SLV	0.501	SLV 3	No
V_SLV	0	SLV 1	No
PF_SLU	0.715	SLU 84	No
V_SLU	0	SLU 4	No

Trave di accoppiamento 94

Verifiche condotte secondo D.M. 17-01-18 (N.T.C.)

Dati geometrici

X ini.	Y ini.	Z ini.inf.	Z ini.sup.	H ini.	X fin.	Y fin.	Z fin.inf.	Z fin.sup	H fin.	Luce	Spessore	R. Trazione
-8.548	-3.169	7.1	8.55	1.45	-9.448	-3.169	7.1	8.55	1.45	0.9	0.28	30000

Caratteristiche del materiale

(Circolare 7 21-01-19 C8.5.I) Muratura in mattoni pieni e malta di calce LC2_Corti

fb_	fhk	fvk0	fhmedio	τ0	fv0	μ	ϕ	fvk,lim	E	G	FC
120000			172500	9000	20000	0.577	0.767	6500	320000000	128000000	1.2

Verifiche a pressoflessione delle travi in muratura in combinazioni non sismiche

Sezione	γM	N	M	Mu	Comb.	c.s.	Verifica
ini.	3	-1576	1475.03	2986.79	SLU 83	2.02	Si
fin.	3	-1576	-2080.47	2986.79	SLU 83	1.44	Si
ini.	3	-1625	1576.49	2986.79	SLU 82	1.89	Si
fin.	3	-1625	-2211.09	2986.79	SLU 82	1.35	Si
ini.	3	-1591	1446.54	2986.79	SLU 75	2.06	Si
fin.	3	-1591	-2080.88	2986.79	SLU 75	1.44	Si
ini.	3	-1631	1384.82	2986.79	SLU 78	2.16	Si
fin.	3	-1631	-1997.43	2986.79	SLU 78	1.5	Si
ini.	3	-1501	1376.38	2986.79	SLU 61	2.17	Si
fin.	3	-1501	-1967.37	2986.79	SLU 61	1.52	Si
ini.	3	-1536	1536.75	2986.79	SLU 81	1.94	Si
fin.	3	-1536	-2163.92	2986.79	SLU 81	1.38	Si
ini.	3	-1501	1406.8	2986.79	SLU 74	2.12	Si
fin.	3	-1501	-2033.72	2986.79	SLU 74	1.47	Si
ini.	3	-1665	1514.77	2986.79	SLU 84	1.97	Si
fin.	3	-1665	-2127.64	2986.79	SLU 84	1.4	Si
ini.	3	-1664	1444.64	2986.79	SLU 76	2.07	Si
fin.	3	-1664	-2059.28	2986.79	SLU 76	1.45	Si
ini.	3	-1624	1506.36	2986.79	SLU 73	1.98	Si
fin.	3	-1624	-2142.73	2986.79	SLU 73	1.39	Si

Verifiche a taglio delle travi in muratura secondo §C8.7.1.3.1 in combinazioni non sismiche

Sezione	γM	N	M	V	Vt	Vp	Vt fess. diag.	Vt,lim	Comb.	c.s.	Verifica
ini.	3	-1501	1406.8	-2972			2164	855	SLU 74	0.29	No
fin.	3	-1501	-2033.72	-4670			2164	855	SLU 74	0.18	No
ini.	3	-1289	1355.39	-2772			2079	822	SLU 39	0.3	No

Sezione	γM	N	M	V	Vt	Vp	Vt fess. diag.	Vt,lim	Comb.	c.s.	Verifica
fin.	3	-1289	-1861.84	-4374			2079	822	SLU 39	0.19	No
ini.	3	-1536	1536.75	-3202			2178	860	SLU 81	0.27	No
fin.	3	-1536	-2163.92	-5018			2178	860	SLU 81	0.17	No
ini.	3	-1665	1514.77	-3138			2230	879	SLU 84	0.28	No
fin.	3	-1665	-2127.64	-4953			2230	879	SLU 84	0.18	No
ini.	3	-1378	1395.13	-2869			2115	836	SLU 40	0.29	No
fin.	3	-1378	-1909	-4471			2115	836	SLU 40	0.19	No
ini.	3	-1591	1446.54	-3069			2200	868	SLU 75	0.28	No
fin.	3	-1591	-2080.88	-4766			2200	868	SLU 75	0.18	No
ini.	3	-1664	1444.64	-3043			2229	879	SLU 76	0.29	No
fin.	3	-1664	-2059.28	-4740			2229	879	SLU 76	0.19	No
ini.	3	-1625	1576.49	-3299			2214	873	SLU 82	0.26	No
fin.	3	-1625	-2211.09	-5115			2214	873	SLU 82	0.17	No
ini.	3	-1624	1506.36	-3204			2213	873	SLU 73	0.27	No
fin.	3	-1624	-2142.73	-4902			2213	873	SLU 73	0.18	No
ini.	3	-1576	1475.03	-3041			2194	866	SLU 83	0.28	No
fin.	3	-1576	-2080.47	-4857			2194	866	SLU 83	0.18	No

Verifiche a pressoflessione delle travi in muratura in combinazioni sismiche

Sezione	γM	N	M	Mu	Comb.	c.s.	Verifica
ini.	2	-1641	3095.59	4480.18	SLV 5	1.45	Si
fin.	2	-1678	-3781.39	4480.18	SLV 5	1.18	Si
ini.	2	-2424	-3017.24	4480.18	SLV 16	1.48	Si
fin.	2	-2056	3331.47	4480.18	SLV 16	1.34	Si
ini.	2	-2424	-3017.24	4480.18	SLV 15	1.48	Si
fin.	2	-2056	3331.47	4480.18	SLV 15	1.34	Si
ini.	2	1015	4301.02	4480.18	SLV 4	1.04	Si
fin.	2	598	-5559.03	4480.18	SLV 4	0.81	No
ini.	2	-3094	-2391.41	4480.18	SLV 14	1.87	Si
fin.	2	-2677	2715.76	4480.18	SLV 14	1.65	Si
ini.	2	344	4926.85	4480.18	SLV 2	0.91	No
fin.	2	-24	-6174.74	4480.18	SLV 2	0.73	No
ini.	2	-3094	-2391.41	4480.18	SLV 13	1.87	Si
fin.	2	-2677	2715.76	4480.18	SLV 13	1.65	Si
ini.	2	344	4926.85	4480.18	SLV 1	0.91	No
fin.	2	-24	-6174.74	4480.18	SLV 1	0.73	No
ini.	2	1015	4301.02	4480.18	SLV 3	1.04	Si
fin.	2	598	-5559.03	4480.18	SLV 3	0.81	No
ini.	2	-1641	3095.59	4480.18	SLV 6	1.45	Si
fin.	2	-1678	-3781.39	4480.18	SLV 6	1.18	Si

Verifiche a taglio delle travi in muratura secondo §C8.7.1.3.1 in combinazioni sismiche

Sezione	γM	N	M	V	Vt	Vp	Vt fess. diag.	Vt,lim	Comb.	c.s.	Verifica
ini.	2	593	1009.5	-2323			2345	743	SLV 8	0.32	No
fin.	2	395	-1729.02	-4619			2345	792	SLV 8	0.17	No
ini.	2	593	1009.5	-2323			2345	743	SLV 7	0.32	No
fin.	2	395	-1729.02	-4619			2345	792	SLV 7	0.17	No
ini.	2	-1641	3095.59	-7331			3002	1187	SLV 5	0.16	No
fin.	2	-1678	-3781.39	-7243			3016	1193	SLV 5	0.16	No
ini.	2	1015	4301.02	-10489			2345	624	SLV 4	0.06	No
fin.	2	598	-5559.03	-11910			2345	741	SLV 4	0.06	No
ini.	2	344	4926.85	-11992			2345	804	SLV 2	0.07	No
fin.	2	-24	-6174.74	-12697			2355	888	SLV 2	0.07	No
ini.	2	344	4926.85	-11992			2345	804	SLV 1	0.07	No
fin.	2	-24	-6174.74	-12697			2355	888	SLV 1	0.07	No
ini.	2	-1641	3095.59	-7331			3002	1187	SLV 6	0.16	No
fin.	2	-1678	-3781.39	-7243			3016	1193	SLV 6	0.16	No
ini.	2	1015	4301.02	-10489			2345	624	SLV 3	0.06	No
fin.	2	598	-5559.03	-11910			2345	741	SLV 3	0.06	No
ini.	2	-2424	-3017.24	7835			3315	1307	SLV 15	0.17	No
fin.	2	-2056	3331.47	6297			3168	1252	SLV 15	0.2	No
ini.	2	-2424	-3017.24	7835			3315	1307	SLV 16	0.17	No
fin.	2	-2056	3331.47	6297			3168	1252	SLV 16	0.2	No

Tabella dei coefficienti di sicurezza minimi

Stato limite	Coeff.s.	Comb.	Verifica
PF_SLV	0.726	SLV 1	No
V_SLV	0.06	SLV 3	No
PF_SLU	1.351	SLU 82	Si
V_SLU	0.171	SLU 82	No

Trave di accoppiamento 95

Verifiche condotte secondo D.M. 17-01-18 (N.T.C.)

Dati geometrici

X ini.	Y ini.	Z ini.inf.	Z ini.sup.	H ini.	X fin.	Y fin.	Z fin.inf.	Z fin.sup	H fin.	Luce	Spessore	R. Trazione
-7.763	-4.403	8.11	8.55	0.44	-7.763	-3.313	8.11	8.55	0.44	1.09	0.28	30000

Caratteristiche del materiale

(Circolare 7 21-01-19 C8.5.I) Muratura in mattoni pieni e malta di calce LC2_Corti

fb_	fhk	fvk0	fhmedio	τ0	fv0	μ	ϕ	fvk,lim	E	G	FC
120000			172500	9000	20000	0.577	0.767	6500	320000000	128000000	1.2

Verifiche a pressoflessione delle travi in muratura in combinazioni non sismiche

Sezione	γM	N	M	Mu	Comb.	c.s.	Verifica

Sezione	γM	N	M	Mu	Comb.	c.s.	Verifica
ini.	3	242	-160.9	275.03	SLU 83	1.71	Si
fin.	3	-104	26.66	275.03	SLU 83	10.32	Si
ini.	3	269	-160.8	275.03	SLU 40	1.71	Si
fin.	3	-29	22.15	275.03	SLU 40	12.41	Si
ini.	3	305	-183.26	275.03	SLU 82	1.5	Si
fin.	3	-45	26.93	275.03	SLU 82	10.21	Si
ini.	3	299	-158.52	275.03	SLU 52	1.73	Si
fin.	3	16	22.09	275.03	SLU 52	12.45	Si
ini.	3	323	-176.94	275.03	SLU 73	1.55	Si
fin.	3	7	23.72	275.03	SLU 73	11.6	Si
ini.	3	308	-162.44	275.03	SLU 76	1.69	Si
fin.	3	16	20.98	275.03	SLU 76	13.11	Si
ini.	3	257	-175.39	275.03	SLU 81	1.57	Si
fin.	3	-113	29.4	275.03	SLU 81	9.36	Si
ini.	3	290	-168.77	275.03	SLU 84	1.63	Si
fin.	3	-36	24.19	275.03	SLU 84	11.37	Si
ini.	3	284	-164.41	275.03	SLU 75	1.67	Si
fin.	3	-34	23.89	275.03	SLU 75	11.51	Si
ini.	3	281	-164.84	275.03	SLU 61	1.67	Si
fin.	3	-36	25.31	275.03	SLU 61	10.87	Si

Verifiche a taglio delle travi in muratura secondo §C8.7.1.3.1 in combinazioni non sismiche

Sezione	γM	N	M	V	Vt	Vp	Vt fess. diag.	Vt,lim	Comb.	c.s.	Verifica
ini.	3	212	-134.82	-742			316	83	SLU 79	0.11	No
fin.	3	-88	22.36	376			340	131	SLU 79	0.35	No
ini.	3	305	-183.26	-524			316	60	SLU 82	0.12	No
fin.	3	-45	26.93	449			328	125	SLU 82	0.28	No
ini.	3	242	-160.9	-700			316	76	SLU 83	0.11	No
fin.	3	-104	26.66	407			344	133	SLU 83	0.33	No
ini.	3	290	-168.77	-580			316	65	SLU 84	0.11	No
fin.	3	-36	24.19	441			326	124	SLU 84	0.28	No
ini.	3	260	-142.7	-621			316	72	SLU 80	0.12	No
fin.	3	-21	19.89	409			322	122	SLU 80	0.3	No
ini.	3	284	-164.41	-555			316	66	SLU 75	0.12	No
fin.	3	-34	23.89	430			325	124	SLU 75	0.29	No
ini.	3	269	-149.92	-610			316	70	SLU 78	0.11	No
fin.	3	-25	21.15	422			323	123	SLU 78	0.29	No
ini.	3	257	-175.39	-645			316	73	SLU 81	0.11	No
fin.	3	-113	29.4	416			346	134	SLU 81	0.32	No
ini.	3	236	-156.54	-675			316	78	SLU 74	0.11	No
fin.	3	-101	26.36	397			343	133	SLU 74	0.33	No
ini.	3	221	-142.04	-731			316	81	SLU 77	0.11	No
fin.	3	-92	23.62	389			341	132	SLU 77	0.34	No

Verifiche a pressoflessione delle travi in muratura in combinazioni sismiche

Sezione	γM	N	M	Mu	Comb.	c.s.	Verifica
ini.	2	-367	579.12	412.54	SLV 8	0.71	No
fin.	2	1045	-24.32	412.54	SLV 8	16.96	Si
ini.	2	812	-943.88	412.54	SLV 6	0.44	No
fin.	2	-1381	84.38	412.54	SLV 6	4.89	Si
ini.	2	534	-582.28	412.54	SLV 2	0.71	No
fin.	2	-757	71.41	412.54	SLV 2	5.78	Si
ini.	2	-482	726.08	412.54	SLV 11	0.57	No
fin.	2	1238	-45.81	412.54	SLV 11	9	Si
ini.	2	-482	726.08	412.54	SLV 12	0.57	No
fin.	2	1238	-45.81	412.54	SLV 12	9	Si
ini.	2	812	-943.88	412.54	SLV 5	0.44	No
fin.	2	-1381	84.38	412.54	SLV 5	4.89	Si
ini.	2	697	-796.92	412.54	SLV 9	0.52	No
fin.	2	-1188	62.88	412.54	SLV 9	6.56	Si
ini.	2	-367	579.12	412.54	SLV 7	0.71	No
fin.	2	1045	-24.32	412.54	SLV 7	16.96	Si
ini.	2	534	-582.28	412.54	SLV 1	0.71	No
fin.	2	-757	71.41	412.54	SLV 1	5.78	Si
ini.	2	697	-796.92	412.54	SLV 10	0.52	No
fin.	2	-1188	62.88	412.54	SLV 10	6.56	Si

Verifiche a taglio delle travi in muratura secondo §C8.7.1.3.1 in combinazioni sismiche

Sezione	γM	N	M	V	Vt	Vp	Vt fess. diag.	Vt,lim	Comb.	c.s.	Verifica
ini.	2	-482	726.08	-3255			603	238	SLV 11	0.07	No
fin.	2	1238	-45.81	-483			474	0	SLV 11	0	No
ini.	2	697	-796.92	2005			474	0	SLV 10	0	No
fin.	2	-1188	62.88	858			791	306	SLV 10	0.36	No
ini.	2	812	-943.88	2337			474	0	SLV 6	0	No
fin.	2	-1381	84.38	1016			843	322	SLV 6	0.32	No
ini.	2	-367	579.12	-2923			572	226	SLV 8	0.08	No
fin.	2	1045	-24.32	-326			474	0	SLV 8	0	No
ini.	2	-204	364.48	-1802			529	206	SLV 15	0.11	No
fin.	2	614	-32.85	-198			474	11	SLV 15	0.06	No
ini.	2	812	-943.88	2337			474	0	SLV 5	0	No
fin.	2	-1381	84.38	1016			843	322	SLV 5	0.32	No
ini.	2	-482	726.08	-3255			603	238	SLV 12	0.07	No
fin.	2	1238	-45.81	-483			474	0	SLV 12	0	No
ini.	2	-367	579.12	-2923			572	226	SLV 7	0.08	No
fin.	2	1045	-24.32	-326			474	0	SLV 7	0	No
ini.	2	-204	364.48	-1802			529	206	SLV 16	0.11	No
fin.	2	614	-32.85	-198			474	11	SLV 16	0.06	No
ini.	2	697	-796.92	2005			474	0	SLV 9	0	No
fin.	2	-1188	62.88	858			791	306	SLV 9	0.36	No

Tabella dei coefficienti di sicurezza minimi

Stato limite	Coeff.s.	Comb.	Verifica
PF_SLV	0.437	SLV 5	No
V_SLV	0	SLV 5	No
PF_SLU	1.501	SLU 82	Si
V_SLU	0.109	SLU 83	No

Trave di accoppiamento 96

Verifiche condotte secondo D.M. 17-01-18 (N.T.C.)

Dati geometrici

X ini.	Y ini.	Z ini.inf.	Z ini.sup.	H ini.	X fin.	Y fin.	Z fin.inf.	Z fin.sup	H fin.	Luce	Spessore	R. Trazione
-5.088	5.94	5	7	2	-5.088	6.44	5	7	2	0.5	0.28	30000

Caratteristiche del materiale

(Circolare 7 21-01-19 C8.5.I) Muratura in mattoni pieni e malta di calce LC2_Corti

fb_	fhk	fvk0	fhmedio	τ0	fv0	μ	ϕ	fvk,lim	E	G	FC
120000			172500	9000	20000	0.577	0.767	6500	320000000	128000000	1.2

Verifiche a pressoflessione delle travi in muratura in combinazioni non sismiche

Sezione	γM	N	M	Mu	Comb.	c.s.	Verifica
ini.	3	1430	-704.15	5682.35	SLU 79	8.07	Si
fin.	3	343	-187.39	5682.35	SLU 79	30.32	Si
ini.	3	1475	-716.17	5682.35	SLU 84	7.93	Si
fin.	3	357	-187.58	5682.35	SLU 84	30.29	Si
ini.	3	1478	-716.45	5682.35	SLU 83	7.93	Si
fin.	3	358	-187.29	5682.35	SLU 83	30.34	Si
ini.	3	1440	-710.21	5682.35	SLU 77	8	Si
fin.	3	345	-190.4	5682.35	SLU 77	29.84	Si
ini.	3	1443	-683.23	5682.35	SLU 81	8.32	Si
fin.	3	351	-181.32	5682.35	SLU 81	31.34	Si
ini.	3	1402	-676.71	5682.35	SLU 75	8.4	Si
fin.	3	337	-184.74	5682.35	SLU 75	30.76	Si
ini.	3	1427	-703.87	5682.35	SLU 80	8.07	Si
fin.	3	343	-187.69	5682.35	SLU 80	30.28	Si
ini.	3	1440	-682.95	5682.35	SLU 82	8.32	Si
fin.	3	350	-181.62	5682.35	SLU 82	31.29	Si
ini.	3	1437	-709.93	5682.35	SLU 78	8	Si
fin.	3	344	-190.7	5682.35	SLU 78	29.8	Si
ini.	3	1406	-676.99	5682.35	SLU 74	8.39	Si
fin.	3	338	-184.44	5682.35	SLU 74	30.81	Si

Verifiche a taglio delle travi in muratura secondo §C8.7.1.3.1 in combinazioni non sismiche

Sezione	γM	N	M	V	Vt	Vp	Vt fess. diag.	Vt,lim	Comb.	c.s.	Verifica
ini.	3	1443	-683.23	409			2157	387	SLU 81	0.94	No
fin.	3	351	-181.32	4881			2157	731	SLU 81	0.15	No
ini.	3	1427	-703.87	456			2157	394	SLU 80	0.86	No
fin.	3	343	-187.69	4869			2157	733	SLU 80	0.15	No
ini.	3	1440	-682.95	404			2157	388	SLU 82	0.96	No
fin.	3	350	-181.62	4874			2157	732	SLU 82	0.15	No
ini.	3	1475	-716.17	468			2157	372	SLU 84	0.79	No
fin.	3	357	-187.58	5016			2157	730	SLU 84	0.15	No
ini.	3	1437	-709.93	446			2157	389	SLU 78	0.87	No
fin.	3	344	-190.7	4916			2157	733	SLU 78	0.15	No
ini.	3	1406	-676.99	387			2157	403	SLU 74	1.04	Si
fin.	3	338	-184.44	4781			2157	734	SLU 74	0.15	No
ini.	3	1440	-710.21	451			2157	388	SLU 77	0.86	No
fin.	3	345	-190.4	4923			2157	733	SLU 77	0.15	No
ini.	3	1430	-704.15	461			2157	393	SLU 79	0.85	No
fin.	3	343	-187.39	4876			2157	733	SLU 79	0.15	No
ini.	3	1478	-716.45	473			2157	370	SLU 83	0.78	No
fin.	3	358	-187.29	5023			2157	730	SLU 83	0.15	No
ini.	3	1402	-676.71	382			2157	405	SLU 75	1.06	Si
fin.	3	337	-184.74	4774			2157	735	SLU 75	0.15	No

Verifiche a pressoflessione delle travi in muratura in combinazioni sismiche

Sezione	γM	N	M	Mu	Comb.	c.s.	Verifica
ini.	2	3083	-2599.21	8523.53	SLV 9	3.28	Si
fin.	2	782	-362.36	8523.53	SLV 9	23.52	Si
ini.	2	-1252	1762.86	8523.53	SLV 7	4.84	Si
fin.	2	-343	112.5	8523.53	SLV 7	75.77	Si
ini.	2	3670	-3220.85	8523.53	SLV 14	2.65	Si
fin.	2	794	-424.9	8523.53	SLV 14	20.06	Si
ini.	2	3083	-2599.21	8523.53	SLV 10	3.28	Si
fin.	2	782	-362.36	8523.53	SLV 10	23.52	Si
ini.	2	-1840	2384.5	8523.53	SLV 3	3.57	Si
fin.	2	-355	175.03	8523.53	SLV 3	48.7	Si
ini.	2	2786	-2337.18	8523.53	SLV 15	3.65	Si
fin.	2	537	-327.69	8523.53	SLV 15	26.01	Si
ini.	2	3670	-3220.85	8523.53	SLV 13	2.65	Si
fin.	2	794	-424.9	8523.53	SLV 13	20.06	Si
ini.	2	-1252	1762.86	8523.53	SLV 8	4.84	Si
fin.	2	-343	112.5	8523.53	SLV 8	75.77	Si
ini.	2	-1840	2384.5	8523.53	SLV 4	3.57	Si
fin.	2	-355	175.03	8523.53	SLV 4	48.7	Si
ini.	2	2786	-2337.18	8523.53	SLV 16	3.65	Si

Sezione	γM	N	M	Mu	Comb.	c.s.	Verifica
fin.	2	537	-327.69	8523.53	SLV 16	26.01	Si

Verifiche a taglio delle travi in muratura secondo §C8.7.1.3.1 in combinazioni sismiche

Sezione	γM	N	M	V	Vt	Vp	Vt fess. diag.	Vt,lim	Comb.	c.s.	Verifica
ini.	2	3083	-2599.21	7657			3235	0	SLV 10	0	No
fin.	2	782	-362.36	9805			3235	1033	SLV 10	0.11	No
ini.	2	-1840	2384.5	-8428			3971	1567	SLV 3	0.19	No
fin.	2	-355	175.03	-6159			3377	1292	SLV 3	0.21	No
ini.	2	-1252	1762.86	-7377			3736	1465	SLV 8	0.2	No
fin.	2	-343	112.5	-3664			3372	1290	SLV 8	0.35	No
ini.	2	3083	-2599.21	7657			3235	0	SLV 9	0	No
fin.	2	782	-362.36	9805			3235	1033	SLV 9	0.11	No
ini.	2	2786	-2337.18	5448			3235	85	SLV 15	0.02	No
fin.	2	537	-327.69	9686			3235	1094	SLV 15	0.11	No
ini.	2	3670	-3220.85	8709			3235	0	SLV 13	0	No
fin.	2	794	-424.9	12300			3235	1030	SLV 13	0.08	No
ini.	2	-1840	2384.5	-8428			3971	1567	SLV 4	0.19	No
fin.	2	-355	175.03	-6159			3377	1292	SLV 4	0.21	No
ini.	2	3670	-3220.85	8709			3235	0	SLV 14	0	No
fin.	2	794	-424.9	12300			3235	1030	SLV 14	0.08	No
ini.	2	2786	-2337.18	5448			3235	85	SLV 16	0.02	No
fin.	2	537	-327.69	9686			3235	1094	SLV 16	0.11	No
ini.	2	-1252	1762.86	-7377			3736	1465	SLV 7	0.2	No
fin.	2	-343	112.5	-3664			3372	1290	SLV 7	0.35	No

Tabella dei coefficienti di sicurezza minimi

Stato limite	Coeff.s.	Comb.	Verifica
PF_SLV	2.646	SLV 13	Si
V_SLV	0	SLV 9	No
PF_SLU	7.931	SLU 83	Si
V_SLU	0.145	SLU 83	No

Trave di accoppiamento 97

Verifiche condotte secondo D.M. 17-01-18 (N.T.C.)

Dati geometrici

X ini.	Y ini.	Z ini.inf.	Z ini.sup.	H ini.	X fin.	Y fin.	Z fin.inf.	Z fin.sup	H fin.	Luce	Spessore	R. Trazione
-5.088	5.94	7.8	8.55	0.75	-5.088	6.44	7.8	8.55	0.75	0.5	0.28	30000

Caratteristiche del materiale

(Circolare 7 21-01-19 C8.5.I) Muratura in mattoni pieni e malta di calce LC2_Corti

fb_	fhk	fvk0	fhmedio	τ0	fv0	μ	ϕ	fvk,lim	E	G	FC
120000			172500	9000	20000	0.577	0.767	6500	320000000	128000000	1.2

Verifiche a pressoflessione delle travi in muratura in combinazioni non sismiche

Sezione	γM	N	M	Mu	Comb.	c.s.	Verifica
ini.	3	-585	-184.1	799.08	SLU 78	4.34	Si
fin.	3	-31	151.89	799.08	SLU 78	5.26	Si
ini.	3	-559	-174.73	799.08	SLU 75	4.57	Si
fin.	3	-29	148.45	799.08	SLU 75	5.38	Si
ini.	3	-603	-187.82	799.08	SLU 83	4.25	Si
fin.	3	-39	154.96	799.08	SLU 83	5.16	Si
ini.	3	-587	-185.45	799.08	SLU 77	4.31	Si
fin.	3	-32	151.97	799.08	SLU 77	5.26	Si
ini.	3	-574	-177.1	799.08	SLU 82	4.51	Si
fin.	3	-36	151.45	799.08	SLU 82	5.28	Si
ini.	3	-577	-178.45	799.08	SLU 81	4.48	Si
fin.	3	-36	151.53	799.08	SLU 81	5.27	Si
ini.	3	-580	-183.59	799.08	SLU 79	4.35	Si
fin.	3	-32	150.16	799.08	SLU 79	5.32	Si
ini.	3	-578	-182.24	799.08	SLU 80	4.38	Si
fin.	3	-31	150.08	799.08	SLU 80	5.32	Si
ini.	3	-561	-176.08	799.08	SLU 74	4.54	Si
fin.	3	-29	148.53	799.08	SLU 74	5.38	Si
ini.	3	-601	-186.47	799.08	SLU 84	4.29	Si
fin.	3	-38	154.89	799.08	SLU 84	5.16	Si

Verifiche a taglio delle travi in muratura secondo §C8.7.1.3.1 in combinazioni non sismiche

Sezione	γM	N	M	V	Vt	Vp	Vt fess. diag.	Vt,lim	Comb.	c.s.	Verifica
ini.	3	-580	-183.59	2900			1041	412	SLU 79	0.14	No
fin.	3	-32	150.16	-297			821	311	SLU 79	1.05	Si
ini.	3	-601	-186.47	2940			1049	415	SLU 84	0.14	No
fin.	3	-38	154.89	-281			824	313	SLU 84	1.11	Si
ini.	3	-585	-184.1	2934			1043	412	SLU 78	0.14	No
fin.	3	-31	151.89	-307			821	311	SLU 78	1.01	Si
ini.	3	-603	-187.82	2948			1050	415	SLU 83	0.14	No
fin.	3	-39	154.96	-279			824	313	SLU 83	1.12	Si
ini.	3	-587	-185.45	2942			1044	413	SLU 77	0.14	No
fin.	3	-32	151.97	-305			821	311	SLU 77	1.02	Si
ini.	3	-578	-182.24	2893			1040	411	SLU 80	0.14	No
fin.	3	-31	150.08	-299			821	311	SLU 80	1.04	Si
ini.	3	-561	-176.08	2851			1033	408	SLU 74	0.14	No
fin.	3	-29	148.53	-315			820	311	SLU 74	0.99	No
ini.	3	-574	-177.1	2850			1038	411	SLU 82	0.14	No
fin.	3	-36	151.45	-292			823	312	SLU 82	1.07	Si

Sezione	γM	N	M	V	Vt	Vp	Vt fess. diag.	Vt,lim	Comb.	c.s.	Verifica
ini.	3	-577	-178.45	2857			1039	411	SLU 81	0.14	No
fin.	3	-36	151.53	-289			823	312	SLU 81	1.08	Si
ini.	3	-559	-174.73	2844			1032	408	SLU 75	0.14	No
fin.	3	-29	148.45	-317			820	311	SLU 75	0.98	No

Verifiche a pressoflessione delle travi in muratura in combinazioni sismiche

Sezione	γM	N	M	Mu	Comb.	c.s.	Verifica
ini.	2	-1982	-603.19	1198.62	SLV 9	1.99	Si
fin.	2	-619	80.93	1198.62	SLV 9	14.81	Si
ini.	2	-1982	-603.19	1198.62	SLV 10	1.99	Si
fin.	2	-619	80.93	1198.62	SLV 10	14.81	Si
ini.	2	1812	584.8	1198.62	SLV 3	2.05	Si
fin.	2	501	44.47	1198.62	SLV 3	26.95	Si
ini.	2	-2469	-795.58	1198.62	SLV 14	1.51	Si
fin.	2	-512	149.5	1198.62	SLV 14	8.02	Si
ini.	2	1145	393.09	1198.62	SLV 2	3.05	Si
fin.	2	197	23.5	1198.62	SLV 2	51.01	Si
ini.	2	1145	393.09	1198.62	SLV 1	3.05	Si
fin.	2	197	23.5	1198.62	SLV 1	51.01	Si
ini.	2	-1802	-603.88	1198.62	SLV 15	1.98	Si
fin.	2	-207	170.48	1198.62	SLV 15	7.03	Si
ini.	2	-1802	-603.88	1198.62	SLV 16	1.98	Si
fin.	2	-207	170.48	1198.62	SLV 16	7.03	Si
ini.	2	1812	584.8	1198.62	SLV 4	2.05	Si
fin.	2	501	44.47	1198.62	SLV 4	26.95	Si
ini.	2	-2469	-795.58	1198.62	SLV 13	1.51	Si
fin.	2	-512	149.5	1198.62	SLV 13	8.02	Si

Verifiche a taglio delle travi in muratura secondo §C8.7.1.3.1 in combinazioni sismiche

Sezione	γM	N	M	V	Vt	Vp	Vt fess. diag.	Vt,lim	Comb.	c.s.	Verifica
ini.	2	-2469	-795.58	5123			2201	836	SLV 14	0.16	No
fin.	2	-512	149.5	2412			1418	557	SLV 14	0.23	No
ini.	2	-1802	-603.88	4610			1934	752	SLV 15	0.16	No
fin.	2	-207	170.48	1626			1296	500	SLV 15	0.31	No
ini.	2	1145	393.09	-876			1213	0	SLV 1	0	No
fin.	2	197	23.5	-2193			1213	412	SLV 1	0.19	No
ini.	2	1325	392.41	113			1213	0	SLV 7	0	No
fin.	2	608	113.05	-2286			1213	296	SLV 7	0.13	No
ini.	2	1812	584.8	-1389			1213	0	SLV 3	0	No
fin.	2	501	44.47	-2980			1213	330	SLV 3	0.11	No
ini.	2	-2469	-795.58	5123			2201	836	SLV 13	0.16	No
fin.	2	-512	149.5	2412			1418	557	SLV 13	0.23	No
ini.	2	1145	393.09	-876			1213	0	SLV 2	0	No
fin.	2	197	23.5	-2193			1213	412	SLV 2	0.19	No
ini.	2	-1802	-603.88	4610			1934	752	SLV 16	0.16	No
fin.	2	-207	170.48	1626			1296	500	SLV 16	0.31	No
ini.	2	1325	392.41	113			1213	0	SLV 8	0	No
fin.	2	608	113.05	-2286			1213	296	SLV 8	0.13	No
ini.	2	1812	584.8	-1389			1213	0	SLV 4	0	No
fin.	2	501	44.47	-2980			1213	330	SLV 4	0.11	No

Tabella dei coefficienti di sicurezza minimi

Stato limite	Coeff.s.	Comb.	Verifica
PF_SLV	1.507	SLV 13	Si
V_SLV	0	SLV 1	No
PF_SLU	4.254	SLU 83	Si
V_SLU	0.14	SLU 77	No

Trave di accoppiamento 98

Verifiche condotte secondo D.M. 17-01-18 (N.T.C.)

Dati geometrici

X ini.	Y ini.	Z ini.inf.	Z ini.sup.	H ini.	X fin.	Y fin.	Z fin.inf.	Z fin.sup	H fin.	Luce	Spessore	R. Trazione
-6.467	-3.169	5	5.9	0.9	-7.467	-3.169	5	5.9	0.9	1	0.28	30000

Caratteristiche del materiale

(Circolare 7 21-01-19 C8.5.I) Muratura in mattoni pieni e malta di calce LC2_Corti

fb_	fhk	fvk0	fhmedio	τ0	fv0	μ	ϕ	fvk,lim	E	G	FC
120000			172500	9000	20000	0.577	0.767	6500	320000000	128000000	1.2

Verifiche a pressoflessione delle travi in muratura in combinazioni non sismiche

Sezione	γM	N	M	Mu	Comb.	c.s.	Verifica
ini.	3	702	191.28	1150.68	SLU 64	6.02	Si
fin.	3	-201	-26.14	1150.68	SLU 64	44.02	Si
ini.	3	502	193.43	1150.68	SLU 65	5.95	Si
fin.	3	-329	-26.75	1150.68	SLU 65	43.01	Si
ini.	3	328	191.25	1150.68	SLU 44	6.02	Si
fin.	3	-330	-30.04	1150.68	SLU 44	38.3	Si
ini.	3	549	183.23	1150.68	SLU 52	6.28	Si
fin.	3	-350	-17.02	1150.68	SLU 52	67.6	Si
ini.	3	424	185.03	1150.68	SLU 46	6.22	Si
fin.	3	-319	-12.42	1150.68	SLU 46	92.66	Si
ini.	3	598	187.21	1150.68	SLU 67	6.15	Si
fin.	3	-318	-9.13	1150.68	SLU 67	126.06	Si
ini.	3	544	183.74	1150.68	SLU 45	6.26	Si

Sezione	γM	N	M	Mu	Comb.	c.s.	Verifica
fin.	3	-243	-12.05	1150.68	SLU 45	95.47	Si
ini.	3	528	189.1	1150.68	SLU 43	6.09	Si
fin.	3	-203	-29.43	1150.68	SLU 43	39.1	Si
ini.	3	718	185.92	1150.68	SLU 66	6.19	Si
fin.	3	-241	-8.76	1150.68	SLU 66	131.33	Si
ini.	3	723	185.41	1150.68	SLU 73	6.21	Si
fin.	3	-348	-13.73	1150.68	SLU 73	83.79	Si

Verifiche a taglio delle travi in muratura secondo §C8.7.1.3.1 in combinazioni non sismiche

Sezione	γM	N	M	V	Vt	Vp	Vt fess. diag.	Vt,lim	Comb.	c.s.	Verifica
ini.	3	1017	179.83	-1484			873	0	SLU 81	0	No
fin.	3	-229	-7.54	1239			956	371	SLU 81	0.3	No
ini.	3	897	181.12	-1458			873	0	SLU 82	0	No
fin.	3	-305	-7.91	1204			983	384	SLU 82	0.32	No
ini.	3	953	157.55	-1396			873	0	SLU 79	0	No
fin.	3	-346	41.94	1374			998	391	SLU 79	0.28	No
ini.	3	954	165.04	-1448			873	0	SLU 77	0	No
fin.	3	-323	31.79	1360			990	387	SLU 77	0.28	No
ini.	3	858	164.79	-1409			873	0	SLU 62	0	No
fin.	3	-293	16.7	1223			979	382	SLU 62	0.31	No
ini.	3	957	123.91	-1097			873	0	SLU 41	0	No
fin.	3	-244	27.65	1170			961	373	SLU 41	0.32	No
ini.	3	1033	166.97	-1435			873	0	SLU 83	0	No
fin.	3	-292	19.99	1342			978	382	SLU 83	0.28	No
ini.	3	913	168.26	-1409			873	0	SLU 84	0	No
fin.	3	-368	19.62	1307			1006	394	SLU 84	0.3	No
ini.	3	939	177.9	-1497			873	0	SLU 74	0	No
fin.	3	-260	4.26	1257			967	376	SLU 74	0.3	No
ini.	3	843	177.65	-1458			873	0	SLU 60	0	No
fin.	3	-231	-10.83	1120			956	371	SLU 60	0.33	No

Verifiche a pressoflessione delle travi in muratura in combinazioni sismiche

Sezione	γM	N	M	Mu	Comb.	c.s.	Verifica
ini.	2	-2523	1053.05	1726.01	SLV 5	1.64	Si
fin.	2	913	-979.32	1726.01	SLV 5	1.76	Si
ini.	2	-1005	1095.58	1726.01	SLV 4	1.58	Si
fin.	2	3067	-1677.4	1726.01	SLV 4	1.03	Si
ini.	2	2135	-806.84	1726.01	SLV 13	2.14	Si
fin.	2	-3388	1643.17	1726.01	SLV 13	1.05	Si
ini.	2	3576	-1149.95	1726.01	SLV 16	1.5	Si
fin.	2	-3446	1898.65	1726.01	SLV 16	0.91	No
ini.	2	-2446	1438.69	1726.01	SLV 1	1.2	Si
fin.	2	3125	-1932.88	1726.01	SLV 1	0.89	No
ini.	2	3576	-1149.95	1726.01	SLV 15	1.5	Si
fin.	2	-3446	1898.65	1726.01	SLV 15	0.91	No
ini.	2	2135	-806.84	1726.01	SLV 14	2.14	Si
fin.	2	-3388	1643.17	1726.01	SLV 14	1.05	Si
ini.	2	-2446	1438.69	1726.01	SLV 2	1.2	Si
fin.	2	3125	-1932.88	1726.01	SLV 2	0.89	No
ini.	2	-2523	1053.05	1726.01	SLV 6	1.64	Si
fin.	2	913	-979.32	1726.01	SLV 6	1.76	Si
ini.	2	-1005	1095.58	1726.01	SLV 3	1.58	Si
fin.	2	3067	-1677.4	1726.01	SLV 3	1.03	Si

Verifiche a taglio delle travi in muratura secondo §C8.7.1.3.1 in combinazioni sismiche

Sezione	γM	N	M	V	Vt	Vp	Vt fess. diag.	Vt,lim	Comb.	c.s.	Verifica
ini.	2	-1005	1095.58	-5099			1672	661	SLV 4	0.13	No
fin.	2	3067	-1677.4	-4890			1310	0	SLV 4	0	No
ini.	2	2135	-806.84	2790			1310	0	SLV 13	0	No
fin.	2	-3388	1643.17	6474			2530	947	SLV 13	0.15	No
ini.	2	-1005	1095.58	-5099			1672	661	SLV 3	0.13	No
fin.	2	3067	-1677.4	-4890			1310	0	SLV 3	0	No
ini.	2	2279	-90.65	281			1310	0	SLV 7	0	No
fin.	2	720	-127.72	1053			1310	323	SLV 7	0.31	No
ini.	2	2279	-90.65	281			1310	0	SLV 8	0	No
fin.	2	720	-127.72	1053			1310	323	SLV 8	0.31	No
ini.	2	-2446	1438.69	-6826			2191	846	SLV 2	0.12	No
fin.	2	3125	-1932.88	-6187			1310	0	SLV 2	0	No
ini.	2	3653	-764.31	3165			1310	0	SLV 12	0	No
fin.	2	-1234	945.09	4851			1754	694	SLV 12	0.14	No
ini.	2	3653	-764.31	3165			1310	0	SLV 11	0	No
fin.	2	-1234	945.09	4851			1754	694	SLV 11	0.14	No
ini.	2	2135	-806.84	2790			1310	0	SLV 14	0	No
fin.	2	-3388	1643.17	6474			2530	947	SLV 14	0.15	No
ini.	2	-2446	1438.69	-6826			2191	846	SLV 1	0.12	No
fin.	2	3125	-1932.88	-6187			1310	0	SLV 1	0	No

Tabella dei coefficienti di sicurezza minimi

Stato limite	Coeff.s.	Comb.	Verifica
PF_SLV	0.893	SLV 1	No
V_SLV	0	SLV 1	No
PF_SLU	5.949	SLU 65	Si
V_SLU	0	SLU 32	No

Trave di accoppiamento 99

Verifiche condotte secondo D.M. 17-01-18 (N.T.C.)

Dati geometrici

X ini.	Y ini.	Z ini.inf.	Z ini.sup.	H ini.	X fin.	Y fin.	Z fin.inf.	Z fin.sup	H fin.	Luce	Spessore	R. Trazione
-6.467	-3.169	7.8	8.55	0.75	-7.467	-3.169	7.8	8.55	0.75	1	0.28	30000

Caratteristiche del materiale

(Circolare 7 21-01-19 C8.5.I) Muratura in mattoni pieni e malta di calce LC2_Corti

fb_	fhk	fvk0	fhmedio	τ0	fv0	μ	ϕ	fvk,lim	E	G	FC
120000			172500	9000	20000	0.577	0.767	6500	320000000	128000000	1.2

Verifiche a pressoflessione delle travi in muratura in combinazioni non sismiche

Sezione	γM	N	M	Mu	Comb.	c.s.	Verifica
ini.	3	-442	-176.44	799.08	SLU 79	4.53	Si
fin.	3	-492	-4.54	799.08	SLU 79	175.99	Si
ini.	3	-351	-162.72	799.08	SLU 82	4.91	Si
fin.	3	-604	-5.84	799.08	SLU 82	136.87	Si
ini.	3	-429	-173.45	799.08	SLU 78	4.61	Si
fin.	3	-575	-6.46	799.08	SLU 78	123.63	Si
ini.	3	-409	-177.15	799.08	SLU 83	4.51	Si
fin.	3	-509	-1.13	799.08	SLU 83	705.91	Si
ini.	3	-396	-161.28	799.08	SLU 76	4.95	Si
fin.	3	-643	-9.01	799.08	SLU 76	88.67	Si
ini.	3	-409	-174.54	799.08	SLU 77	4.58	Si
fin.	3	-492	-6.82	799.08	SLU 77	117.23	Si
ini.	3	-429	-176.06	799.08	SLU 84	4.54	Si
fin.	3	-592	-0.78	799.08	SLU 84	1025.15	Si
ini.	3	-461	-175.35	799.08	SLU 80	4.56	Si
fin.	3	-575	-4.19	799.08	SLU 80	190.8	Si
ini.	3	-331	-163.81	799.08	SLU 81	4.88	Si
fin.	3	-521	-6.19	799.08	SLU 81	129.08	Si
ini.	3	-402	-161.49	799.08	SLU 41	4.95	Si
fin.	3	-405	12.5	799.08	SLU 41	63.95	Si

Verifiche a taglio delle travi in muratura secondo §C8.7.1.3.1 in combinazioni non sismiche

Sezione	γM	N	M	V	Vt	Vp	Vt fess. diag.	Vt,lim	Comb.	c.s.	Verifica
ini.	3	-461	-175.35	2135			745	294	SLU 80	0.14	No
fin.	3	-575	-4.19	-1436			779	308	SLU 80	0.21	No
ini.	3	-351	-160.1	2075			712	280	SLU 75	0.13	No
fin.	3	-587	-11.52	-1503			783	310	SLU 75	0.21	No
ini.	3	-409	-177.15	2272			729	287	SLU 83	0.13	No
fin.	3	-509	-1.13	-1521			759	300	SLU 83	0.2	No
ini.	3	-331	-163.81	2202			706	277	SLU 81	0.13	No
fin.	3	-521	-6.19	-1554			763	301	SLU 81	0.19	No
ini.	3	-429	-176.06	2209			735	290	SLU 84	0.13	No
fin.	3	-592	-0.78	-1504			784	310	SLU 84	0.21	No
ini.	3	-331	-161.19	2139			706	277	SLU 74	0.13	No
fin.	3	-504	-11.87	-1521			758	299	SLU 74	0.2	No
ini.	3	-442	-176.44	2199			739	292	SLU 79	0.13	No
fin.	3	-492	-4.54	-1454			754	298	SLU 79	0.2	No
ini.	3	-409	-174.54	2209			729	287	SLU 77	0.13	No
fin.	3	-492	-6.82	-1488			754	298	SLU 77	0.2	No
ini.	3	-429	-173.45	2145			735	290	SLU 78	0.14	No
fin.	3	-575	-6.46	-1470			779	308	SLU 78	0.21	No
ini.	3	-351	-162.72	2139			712	280	SLU 82	0.13	No
fin.	3	-604	-5.84	-1537			788	312	SLU 82	0.2	No

Verifiche a pressoflessione delle travi in muratura in combinazioni sismiche

Sezione	γM	N	M	Mu	Comb.	c.s.	Verifica
ini.	2	-4497	-999.6	1198.62	SLV 16	1.2	Si
fin.	2	1244	552.36	1198.62	SLV 16	2.17	Si
ini.	2	-4497	-999.6	1198.62	SLV 15	1.2	Si
fin.	2	1244	552.36	1198.62	SLV 15	2.17	Si
ini.	2	3632	674.96	1198.62	SLV 3	1.78	Si
fin.	2	-1305	-413.23	1198.62	SLV 3	2.9	Si
ini.	2	4192	811.01	1198.62	SLV 1	1.48	Si
fin.	2	-2017	-599.07	1198.62	SLV 1	2	Si
ini.	2	-2305	-572.24	1198.62	SLV 11	2.09	Si
fin.	2	1183	431.21	1198.62	SLV 11	2.78	Si
ini.	2	4192	811.01	1198.62	SLV 2	1.48	Si
fin.	2	-2017	-599.07	1198.62	SLV 2	2	Si
ini.	2	3632	674.96	1198.62	SLV 4	1.78	Si
fin.	2	-1305	-413.23	1198.62	SLV 4	2.9	Si
ini.	2	-2305	-572.24	1198.62	SLV 12	2.09	Si
fin.	2	1183	431.21	1198.62	SLV 12	2.78	Si
ini.	2	-3938	-863.55	1198.62	SLV 14	1.39	Si
fin.	2	532	366.52	1198.62	SLV 14	3.27	Si
ini.	2	-3938	-863.55	1198.62	SLV 13	1.39	Si
fin.	2	532	366.52	1198.62	SLV 13	3.27	Si

Verifiche a taglio delle travi in muratura secondo §C8.7.1.3.1 in combinazioni sismiche

Sezione	γM	N	M	V	Vt	Vp	Vt fess. diag.	Vt,lim	Comb.	c.s.	Verifica
ini.	2	1999	383.65	-1019			910	0	SLV 5	0	No
fin.	2	-1955	-477.92	-3929			1496	579	SLV 5	0.15	No
ini.	2	4192	811.01	-3007			910	0	SLV 1	0	No
fin.	2	-2017	-599.07	-4492			1515	585	SLV 1	0.13	No
ini.	2	-4497	-999.6	5735			2259	787	SLV 15	0.14	No
fin.	2	1244	552.36	2275			910	0	SLV 15	0	No
ini.	2	-4497	-999.6	5735			2259	787	SLV 16	0.14	No
fin.	2	1244	552.36	2275			910	0	SLV 16	0	No
ini.	2	1999	383.65	-1019			910	0	SLV 6	0	No

Sezione	γM	N	M	V	Vt	Vp	Vt fess. diag.	Vt,lim	Comb.	c.s.	Verifica
fin.	2	-1955	-477.92	-3929			1496	579	SLV 6	0.15	No
ini.	2	4192	811.01	-3007			910	0	SLV 2	0	No
fin.	2	-2017	-599.07	-4492			1515	585	SLV 2	0.13	No
ini.	2	-2305	-572.24	3747			1601	612	SLV 12	0.16	No
fin.	2	1183	431.21	1713			910	0	SLV 12	0	No
ini.	2	-2305	-572.24	3747			1601	612	SLV 11	0.16	No
fin.	2	1183	431.21	1713			910	0	SLV 11	0	No
ini.	2	3632	674.96	-2301			910	0	SLV 4	0	No
fin.	2	-1305	-413.23	-3301			1301	513	SLV 4	0.16	No
ini.	2	3632	674.96	-2301			910	0	SLV 3	0	No
fin.	2	-1305	-413.23	-3301			1301	513	SLV 3	0.16	No

Tabella dei coefficienti di sicurezza minimi

Stato limite	Coeff.s.	Comb.	Verifica
PF_SLV	1.199	SLV 15	Si
V_SLV	0	SLV 1	No
PF_SLU	4.511	SLU 83	Si
V_SLU	0.126	SLU 81	No

Trave di accoppiamento 100

Verifiche condotte secondo D.M. 17-01-18 (N.T.C.)

Dati geometrici

X ini.	Y ini.	Z ini.inf.	Z ini.sup.	H ini.	X fin.	Y fin.	Z fin.inf.	Z fin.sup	H fin.	Luce	Spessore	R. Trazione
-5.437	-3.169	5	7	2	-5.937	-3.169	5	7	2	0.5	0.28	30000

Caratteristiche del materiale

(Circolare 7 21-01-19 C8.5.I) Muratura in mattoni pieni e malta di calce LC2_Corti

fb_	fhk	fvk0	fhmedio	τ0	fv0	μ	ϕ	fvk,lim	E	G	FC
120000			172500	9000	20000	0.577	0.767	6500	320000000	128000000	1.2

Verifiche a pressoflessione delle travi in muratura in combinazioni non sismiche

Sezione	γM	N	M	Mu	Comb.	c.s.	Verifica
ini.	3	-1643	1004.6	5682.35	SLU 81	5.66	Si
fin.	3	870	1312.81	5682.35	SLU 81	4.33	Si
ini.	3	-1629	929.62	5682.35	SLU 79	6.11	Si
fin.	3	775	1272.81	5682.35	SLU 79	4.46	Si
ini.	3	-1485	876.72	5682.35	SLU 75	6.48	Si
fin.	3	657	1185.67	5682.35	SLU 75	4.79	Si
ini.	3	-1479	927.87	5682.35	SLU 82	6.12	Si
fin.	3	750	1235.13	5682.35	SLU 82	4.6	Si
ini.	3	-1488	865.89	5682.35	SLU 78	6.56	Si
fin.	3	656	1202.29	5682.35	SLU 78	4.73	Si
ini.	3	-1652	942.62	5682.35	SLU 77	6.03	Si
fin.	3	776	1279.97	5682.35	SLU 77	4.44	Si
ini.	3	-1646	993.77	5682.35	SLU 83	5.72	Si
fin.	3	869	1329.43	5682.35	SLU 83	4.27	Si
ini.	3	-1649	953.45	5682.35	SLU 74	5.96	Si
fin.	3	777	1263.35	5682.35	SLU 74	4.5	Si
ini.	3	-1465	852.89	5682.35	SLU 80	6.66	Si
fin.	3	655	1195.13	5682.35	SLU 80	4.75	Si
ini.	3	-1482	917.04	5682.35	SLU 84	6.2	Si
fin.	3	749	1251.75	5682.35	SLU 84	4.54	Si

Verifiche a taglio delle travi in muratura secondo §C8.7.1.3.1 in combinazioni non sismiche

Sezione	γM	N	M	V	Vt	Vp	Vt fess. diag.	Vt,lim	Comb.	c.s.	Verifica
ini.	3	-1591	885.6	-6331			2793	1105	SLU 62	0.17	No
fin.	3	701	1182.07	-1416			2157	641	SLU 62	0.45	No
ini.	3	-1646	993.77	-6899			2815	1113	SLU 83	0.16	No
fin.	3	869	1329.43	-1570			2157	593	SLU 83	0.38	No
ini.	3	-1588	896.43	-6364			2792	1104	SLU 60	0.17	No
fin.	3	701	1165.45	-1487			2157	641	SLU 60	0.43	No
ini.	3	-1643	1004.6	-6933			2814	1113	SLU 81	0.16	No
fin.	3	870	1312.81	-1641			2157	593	SLU 81	0.36	No
ini.	3	-1649	953.45	-6717			2816	1114	SLU 74	0.17	No
fin.	3	777	1263.35	-1507			2157	620	SLU 74	0.41	No
ini.	3	-1479	927.87	-6402			2748	1087	SLU 82	0.17	No
fin.	3	750	1235.13	-1083			2157	628	SLU 82	0.58	No
ini.	3	-1629	929.62	-6589			2808	1111	SLU 79	0.17	No
fin.	3	775	1272.81	-1414			2157	621	SLU 79	0.44	No
ini.	3	-1482	917.04	-6368			2749	1087	SLU 84	0.17	No
fin.	3	749	1251.75	-1012			2157	628	SLU 84	0.62	No
ini.	3	-1652	942.62	-6684			2817	1114	SLU 77	0.17	No
fin.	3	776	1279.97	-1435			2157	620	SLU 77	0.43	No
ini.	3	-1485	876.72	-6186			2751	1088	SLU 75	0.18	No
fin.	3	657	1185.67	-949			2157	653	SLU 75	0.69	No

Verifiche a pressoflessione delle travi in muratura in combinazioni sismiche

Sezione	γM	N	M	Mu	Comb.	c.s.	Verifica
ini.	2	-4182	1952.52	8523.53	SLV 2	4.37	Si
fin.	2	-1364	-521.11	8523.53	SLV 2	16.36	Si
ini.	2	1749	-656.87	8523.53	SLV 15	12.98	Si
fin.	2	2273	2198.14	8523.53	SLV 15	3.88	Si
ini.	2	-3214	2181.85	8523.53	SLV 4	3.91	Si
fin.	2	60	70.4	8523.53	SLV 4	121.07	Si

Sezione	γM	N	M	Mu	Comb.	c.s.	Verifica
ini.	2	781	-886.2	8523.53	SLV 14	9.62	Si
fin.	2	849	1606.63	8523.53	SLV 14	5.31	Si
ini.	2	781	-886.2	8523.53	SLV 13	9.62	Si
fin.	2	849	1606.63	8523.53	SLV 13	5.31	Si
ini.	2	-4182	1952.52	8523.53	SLV 1	4.37	Si
fin.	2	-1364	-521.11	8523.53	SLV 1	16.36	Si
ini.	2	1749	-656.87	8523.53	SLV 16	12.98	Si
fin.	2	2273	2198.14	8523.53	SLV 16	3.88	Si
ini.	2	-3214	2181.85	8523.53	SLV 3	3.91	Si
fin.	2	60	70.4	8523.53	SLV 3	121.07	Si
ini.	2	1142	604.24	8523.53	SLV 12	14.11	Si
fin.	2	3160	2143.53	8523.53	SLV 12	3.98	Si
ini.	2	1142	604.24	8523.53	SLV 11	14.11	Si
fin.	2	3160	2143.53	8523.53	SLV 11	3.98	Si

Verifiche a taglio delle travi in muratura secondo §C8.7.1.3.1 in combinazioni sismiche

Sezione	γM	N	M	V	Vt	Vp	Vt fess. diag.	Vt,lim	Comb.	c.s.	Verifica
ini.	2	1142	604.24	-2900			3235	937	SLV 12	0.32	No
fin.	2	3160	2143.53	-540			3235	0	SLV 12	0	No
ini.	2	1749	-656.87	2762			3235	746	SLV 16	0.27	No
fin.	2	2273	2198.14	6794			3235	528	SLV 16	0.08	No
ini.	2	1142	604.24	-2900			3235	937	SLV 11	0.32	No
fin.	2	3160	2143.53	-540			3235	0	SLV 11	0	No
ini.	2	-347	1455.86	-7455			3374	1291	SLV 8	0.17	No
fin.	2	2496	1505.21	-5619			3235	401	SLV 8	0.07	No
ini.	2	-347	1455.86	-7455			3374	1291	SLV 7	0.17	No
fin.	2	2496	1505.21	-5619			3235	401	SLV 7	0.07	No
ini.	2	-3214	2181.85	-12422			4521	1784	SLV 3	0.14	No
fin.	2	60	70.4	-10138			3235	1204	SLV 3	0.12	No
ini.	2	781	-886.2	3060			3235	1034	SLV 14	0.34	No
fin.	2	849	1606.63	8001			3235	1016	SLV 14	0.13	No
ini.	2	1749	-656.87	2762			3235	746	SLV 15	0.27	No
fin.	2	2273	2198.14	6794			3235	528	SLV 15	0.08	No
ini.	2	781	-886.2	3060			3235	1034	SLV 13	0.34	No
fin.	2	849	1606.63	8001			3235	1016	SLV 13	0.13	No
ini.	2	-3214	2181.85	-12422			4521	1784	SLV 4	0.14	No
fin.	2	60	70.4	-10138			3235	1204	SLV 4	0.12	No

Tabella dei coefficienti di sicurezza minimi

Stato limite	Coeff.s.	Comb.	Verifica
PF_SLV	3.878	SLV 15	Si
V_SLV	0	SLV 11	No
PF_SLU	4.274	SLU 83	Si
V_SLU	0.161	SLU 81	No

Trave di accoppiamento 101

Verifiche condotte secondo D.M. 17-01-18 (N.T.C.)

Dati geometrici

X ini.	Y ini.	Z ini.inf.	Z ini.sup.	H ini.	X fin.	Y fin.	Z fin.inf.	Z fin.sup	H fin.	Luce	Spessore	R. Trazione
-5.437	-3.169	7.8	8.55	0.75	-5.937	-3.169	7.8	8.55	0.75	0.5	0.28	30000

Caratteristiche del materiale

(Circolare 7 21-01-19 C8.5.I) Muratura in mattoni pieni e malta di calce LC2_Corti

fb_	fhk	fvk0	fhmedio	τ0	fv0	μ	ϕ	fvk,lim	E	G	FC
120000			172500	9000	20000	0.577	0.767	6500	320000000	128000000	1.2

Verifiche a pressoflessione delle travi in muratura in combinazioni non sismiche

Sezione	γM	N	M	Mu	Comb.	c.s.	Verifica
ini.	3	168	101.3	799.08	SLU 77	7.89	Si
fin.	3	-500	-143.41	799.08	SLU 77	5.57	Si
ini.	3	237	111.88	799.08	SLU 74	7.14	Si
fin.	3	-435	-140.39	799.08	SLU 74	5.69	Si
ini.	3	119	87.62	799.08	SLU 41	9.12	Si
fin.	3	-497	-131.14	799.08	SLU 41	6.09	Si
ini.	3	189	109.63	799.08	SLU 83	7.29	Si
fin.	3	-519	-149.53	799.08	SLU 83	5.34	Si
ini.	3	106	91.29	799.08	SLU 84	8.75	Si
fin.	3	-479	-127.24	799.08	SLU 84	6.28	Si
ini.	3	197	102.39	799.08	SLU 62	7.8	Si
fin.	3	-436	-133.18	799.08	SLU 62	6	Si
ini.	3	128	96.25	799.08	SLU 79	8.3	Si
fin.	3	-530	-143.01	799.08	SLU 79	5.59	Si
ini.	3	266	112.96	799.08	SLU 60	7.07	Si
fin.	3	-371	-130.16	799.08	SLU 60	6.14	Si
ini.	3	188	98.2	799.08	SLU 39	8.14	Si
fin.	3	-432	-128.12	799.08	SLU 39	6.24	Si
ini.	3	258	120.2	799.08	SLU 81	6.65	Si
fin.	3	-454	-146.51	799.08	SLU 81	5.45	Si

Verifiche a taglio delle travi in muratura secondo §C8.7.1.3.1 in combinazioni non sismiche

Sezione	γM	N	M	V	Vt	Vp	Vt fess. diag.	Vt,lim	Comb.	c.s.	Verifica
ini.	3	168	101.3	1411			809	265	SLU 77	0.19	No
fin.	3	-500	-143.41	-3457			1009	398	SLU 77	0.12	No
ini.	3	128	96.25	1385			809	275	SLU 79	0.2	No

Sezione	γM	N	M	V	Vt	Vp	Vt fess. diag.	Vt,lim	Comb.	c.s.	Verifica
fin.	3	-530	-143.01	-3395			1021	403	SLU 79	0.12	No
ini.	3	154	93.55	1559			809	269	SLU 75	0.17	No
fin.	3	-395	-118.1	-3279			967	381	SLU 75	0.12	No
ini.	3	237	111.88	1383			809	247	SLU 74	0.18	No
fin.	3	-435	-140.39	-3467			983	388	SLU 74	0.11	No
ini.	3	266	112.96	1247			809	240	SLU 60	0.19	No
fin.	3	-371	-130.16	-3242			957	376	SLU 60	0.12	No
ini.	3	189	109.63	1416			809	260	SLU 83	0.18	No
fin.	3	-519	-149.53	-3587			1016	402	SLU 83	0.11	No
ini.	3	176	101.87	1564			809	263	SLU 82	0.17	No
fin.	3	-415	-124.22	-3408			975	384	SLU 82	0.11	No
ini.	3	106	91.29	1592			809	280	SLU 84	0.18	No
fin.	3	-479	-127.24	-3398			1001	395	SLU 84	0.12	No
ini.	3	129	86.84	1623			809	275	SLU 73	0.17	No
fin.	3	-334	-99.83	-3102			942	370	SLU 73	0.12	No
ini.	3	258	120.2	1387			809	242	SLU 81	0.17	No
fin.	3	-454	-146.51	-3597			991	391	SLU 81	0.11	No

Verifiche a pressoflessione delle travi in muratura in combinazioni sismiche

Sezione	γM	N	M	Mu	Comb.	c.s.	Verifica
ini.	2	4695	876.11	1198.62	SLV 1	1.37	Si
fin.	2	3166	-6.61	1198.62	SLV 1	181.34	Si
ini.	2	-4101	-618.88	1198.62	SLV 13	1.94	Si
fin.	2	-2988	-71.86	1198.62	SLV 13	16.68	Si
ini.	2	4535	789.98	1198.62	SLV 3	1.52	Si
fin.	2	2531	-110.16	1198.62	SLV 3	10.88	Si
ini.	2	4535	789.98	1198.62	SLV 4	1.52	Si
fin.	2	2531	-110.16	1198.62	SLV 4	10.88	Si
ini.	2	-4261	-705	1198.62	SLV 16	1.7	Si
fin.	2	-3623	-175.41	1198.62	SLV 16	6.83	Si
ini.	2	4695	876.11	1198.62	SLV 2	1.37	Si
fin.	2	3166	-6.61	1198.62	SLV 2	181.34	Si
ini.	2	1803	453.34	1198.62	SLV 6	2.64	Si
fin.	2	1752	91.37	1198.62	SLV 6	13.12	Si
ini.	2	-4101	-618.88	1198.62	SLV 14	1.94	Si
fin.	2	-2988	-71.86	1198.62	SLV 14	16.68	Si
ini.	2	1803	453.34	1198.62	SLV 5	2.64	Si
fin.	2	1752	91.37	1198.62	SLV 5	13.12	Si
ini.	2	-4261	-705	1198.62	SLV 15	1.7	Si
fin.	2	-3623	-175.41	1198.62	SLV 15	6.83	Si

Verifiche a taglio delle travi in muratura secondo §C8.7.1.3.1 in combinazioni sismiche

Sezione	γM	N	M	V	Vt	Vp	Vt fess. diag.	Vt,lim	Comb.	c.s.	Verifica
ini.	2	1803	453.34	1533			1213	0	SLV 6	0	No
fin.	2	1752	91.37	-1847			1213	0	SLV 6	0	No
ini.	2	4695	876.11	-1524			1213	0	SLV 1	0	No
fin.	2	3166	-6.61	-4078			1213	0	SLV 1	0	No
ini.	2	-836	4.84	3268			1547	612	SLV 9	0.19	No
fin.	2	-94	71.79	-606			1251	477	SLV 9	0.79	No
ini.	2	4535	789.98	-2409			1213	0	SLV 4	0	No
fin.	2	2531	-110.16	-4749			1213	0	SLV 4	0	No
ini.	2	1270	166.26	-1418			1213	0	SLV 8	0	No
fin.	2	-363	-253.81	-4084			1358	530	SLV 8	0.13	No
ini.	2	1270	166.26	-1418			1213	0	SLV 7	0	No
fin.	2	-363	-253.81	-4084			1358	530	SLV 7	0.13	No
ini.	2	4695	876.11	-1524			1213	0	SLV 2	0	No
fin.	2	3166	-6.61	-4078			1213	0	SLV 2	0	No
ini.	2	4535	789.98	-2409			1213	0	SLV 3	0	No
fin.	2	2531	-110.16	-4749			1213	0	SLV 3	0	No
ini.	2	1803	453.34	1533			1213	0	SLV 5	0	No
fin.	2	1752	91.37	-1847			1213	0	SLV 5	0	No
ini.	2	-836	4.84	3268			1547	612	SLV 10	0.19	No
fin.	2	-94	71.79	-606			1251	477	SLV 10	0.79	No

Tabella dei coefficienti di sicurezza minimi

Stato limite	Coeff.s.	Comb.	Verifica
PF_SLV	1.368	SLV 1	Si
V_SLV	0	SLV 1	No
PF_SLU	5.344	SLU 83	Si
V_SLU	0.109	SLU 81	No

Trave di accoppiamento 102

Verifiche condotte secondo D.M. 17-01-18 (N.T.C.)

Dati geometrici

X ini.	Y ini.	Z ini.inf.	Z ini.sup.	H ini.	X fin.	Y fin.	Z fin.inf.	Z fin.sup	H fin.	Luce	Spessore	R. Trazione
-1.952	-3.169	5	5.9	0.9	-2.952	-3.169	5	5.9	0.9	1	0.28	30000

Caratteristiche del materiale

(Circolare 7 21-01-19 C8.5.I) Muratura in mattoni pieni e malta di calce LC2_Corti

fb_	fhk	fvk0	fhmedio	τ0	fv0	μ	ϕ	fvk,lim	E	G	FC
120000			172500	9000	20000	0.577	0.767	6500	320000000	128000000	1.2

Verifiche a pressoflessione delle travi in muratura in combinazioni non sismiche

Sezione	γM	N	M	Mu	Comb.	c.s.	Verifica

Sezione	γM	N	M	Mu	Comb.	c.s.	Verifica
ini.	3	-148	-163.49	1150.68	SLU 75	7.04	Si
fin.	3	-3390	680.17	1150.68	SLU 75	1.69	Si
ini.	3	-223	-171.65	1150.68	SLU 81	6.7	Si
fin.	3	-3655	718.23	1150.68	SLU 81	1.6	Si
ini.	3	-247	-165.09	1150.68	SLU 74	6.97	Si
fin.	3	-3606	703.24	1150.68	SLU 74	1.64	Si
ini.	3	-143	-165.53	1150.68	SLU 80	6.95	Si
fin.	3	-3425	684.24	1150.68	SLU 80	1.68	Si
ini.	3	-218	-175.3	1150.68	SLU 83	6.56	Si
fin.	3	-3713	728.45	1150.68	SLU 83	1.58	Si
ini.	3	-124	-170.05	1150.68	SLU 82	6.77	Si
fin.	3	-3439	695.17	1150.68	SLU 82	1.66	Si
ini.	3	-242	-168.74	1150.68	SLU 77	6.82	Si
fin.	3	-3664	713.46	1150.68	SLU 77	1.61	Si
ini.	3	-120	-173.71	1150.68	SLU 84	6.62	Si
fin.	3	-3498	705.38	1150.68	SLU 84	1.63	Si
ini.	3	-242	-167.13	1150.68	SLU 79	6.89	Si
fin.	3	-3641	707.31	1150.68	SLU 79	1.63	Si
ini.	3	-144	-167.15	1150.68	SLU 78	6.88	Si
fin.	3	-3448	690.39	1150.68	SLU 78	1.67	Si

Verifiche a taglio delle travi in muratura secondo §C8.7.1.3.1 in combinazioni non sismiche

Sezione	γM	N	M	V	Vt	Vp	Vt fess. diag.	Vt,lim	Comb.	c.s.	Verifica
ini.	3	-82	-160.82	236			903	344	SLU 76	1.46	Si
fin.	3	-3222	658.64	3666			2033	723	SLU 76	0.2	No
ini.	3	-87	-157.16	224			905	345	SLU 73	1.54	Si
fin.	3	-3164	648.43	3607			2012	718	SLU 73	0.2	No
ini.	3	-130	-136.4	102			920	353	SLU 55	3.46	Si
fin.	3	-2933	590.8	3351			1929	697	SLU 55	0.21	No
ini.	3	-120	-173.71	457			917	351	SLU 84	0.77	No
fin.	3	-3498	705.38	3763			2133	747	SLU 84	0.2	No
ini.	3	-148	-163.49	373			927	357	SLU 75	0.96	No
fin.	3	-3390	680.17	3666			2094	738	SLU 75	0.2	No
ini.	3	-144	-167.15	385			925	356	SLU 78	0.92	No
fin.	3	-3448	690.39	3725			2115	743	SLU 78	0.2	No
ini.	3	-218	-175.3	677			952	369	SLU 83	0.55	No
fin.	3	-3713	728.45	3698			2210	765	SLU 83	0.21	No
ini.	3	-124	-170.05	444			918	352	SLU 82	0.79	No
fin.	3	-3439	695.17	3704			2111	742	SLU 82	0.2	No
ini.	3	-143	-165.53	396			925	356	SLU 80	0.9	No
fin.	3	-3425	684.24	3682			2106	741	SLU 80	0.2	No
ini.	3	-242	-168.74	605			961	373	SLU 77	0.62	No
fin.	3	-3664	713.46	3660			2192	761	SLU 77	0.21	No

Verifiche a pressoflessione delle travi in muratura in combinazioni sismiche

Sezione	γM	N	M	Mu	Comb.	c.s.	Verifica
ini.	2	-4326	937.65	1726.01	SLV 1	1.84	Si
fin.	2	1882	-701.74	1726.01	SLV 1	2.46	Si
ini.	2	3856	-1146.09	1726.01	SLV 16	1.51	Si
fin.	2	-6880	1657.89	1726.01	SLV 16	1.04	Si
ini.	2	3856	-1146.09	1726.01	SLV 15	1.51	Si
fin.	2	-6880	1657.89	1726.01	SLV 15	1.04	Si
ini.	2	3080	-1096.77	1726.01	SLV 14	1.57	Si
fin.	2	-7909	1751.6	1726.01	SLV 14	0.99	No
ini.	2	-3550	888.33	1726.01	SLV 4	1.94	Si
fin.	2	2912	-795.45	1726.01	SLV 4	2.17	Si
ini.	2	-3550	888.33	1726.01	SLV 3	1.94	Si
fin.	2	2912	-795.45	1726.01	SLV 3	2.17	Si
ini.	2	-4326	937.65	1726.01	SLV 2	1.84	Si
fin.	2	1882	-701.74	1726.01	SLV 2	2.46	Si
ini.	2	3080	-1096.77	1726.01	SLV 13	1.57	Si
fin.	2	-7909	1751.6	1726.01	SLV 13	0.99	No
ini.	2	-418	-327.19	1726.01	SLV 10	5.28	Si
fin.	2	-5683	1002.25	1726.01	SLV 10	1.72	Si
ini.	2	-418	-327.19	1726.01	SLV 9	5.28	Si
fin.	2	-5683	1002.25	1726.01	SLV 9	1.72	Si

Verifiche a taglio delle travi in muratura secondo §C8.7.1.3.1 in combinazioni sismiche

Sezione	γM	N	M	V	Vt	Vp	Vt fess. diag.	Vt,lim	Comb.	c.s.	Verifica
ini.	2	3856	-1146.09	6466			1310	0	SLV 15	0	No
fin.	2	-6880	1657.89	8440			3787	1253	SLV 15	0.15	No
ini.	2	-3550	888.33	-4842			2588	963	SLV 3	0.2	No
fin.	2	2912	-795.45	-4286			1310	0	SLV 3	0	No
ini.	2	-3550	888.33	-4842			2588	963	SLV 4	0.2	No
fin.	2	2912	-795.45	-4286			1310	0	SLV 4	0	No
ini.	2	2169	-491.59	3605			1310	0	SLV 12	0	No
fin.	2	-2252	689.9	3086			2121	823	SLV 12	0.27	No
ini.	2	3080	-1096.77	5526			1310	0	SLV 14	0	No
fin.	2	-7909	1751.6	9212			4157	1330	SLV 14	0.14	No
ini.	2	3080	-1096.77	5526			1310	0	SLV 13	0	No
fin.	2	-7909	1751.6	9212			4157	1330	SLV 13	0.14	No
ini.	2	3856	-1146.09	6466			1310	0	SLV 16	0	No
fin.	2	-6880	1657.89	8440			3787	1253	SLV 16	0.15	No
ini.	2	-4326	937.65	-5782			2868	1038	SLV 1	0.18	No
fin.	2	1882	-701.74	-3514			1310	0	SLV 1	0	No
ini.	2	-4326	937.65	-5782			2868	1038	SLV 2	0.18	No
fin.	2	1882	-701.74	-3514			1310	0	SLV 2	0	No
ini.	2	2169	-491.59	3605			1310	0	SLV 11	0	No
fin.	2	-2252	689.9	3086			2121	823	SLV 11	0.27	No

Tabella dei coefficienti di sicurezza minimi

Stato limite	Coeff.s.	Comb.	Verifica
PF_SLV	0.985	SLV 13	No
V_SLV	0	SLV 1	No
PF_SLU	1.58	SLU 83	Si
V_SLU	0.197	SLU 76	No

Trave di accoppiamento 103

Verifiche condotte secondo D.M. 17-01-18 (N.T.C.)

Dati geometrici

X ini.	Y ini.	Z ini.inf.	Z ini.sup.	H ini.	X fin.	Y fin.	Z fin.inf.	Z fin.sup	H fin.	Luce	Spessore	R. Trazione
-1.952	-3.169	7.8	8.55	0.75	-2.952	-3.169	7.8	8.55	0.75	1	0.28	30000

Caratteristiche del materiale

(Circolare 7 21-01-19 C8.5.I) Muratura in mattoni pieni e malta di calce LC2_Corti

fb_	fhk	fvk0	fhmedio	τ0	fv0	μ	ϕ	fvk,lim	E	G	FC
120000			172500	9000	20000	0.577	0.767	6500	320000000	128000000	1.2

Verifiche a pressoflessione delle travi in muratura in combinazioni non sismiche

Sezione	γM	N	M	Mu	Comb.	c.s.	Verifica
ini.	3	-2058	-435.56	799.08	SLU 75	1.83	Si
fin.	3	-145	34.31	799.08	SLU 75	23.29	Si
ini.	3	-2235	-451.53	799.08	SLU 79	1.77	Si
fin.	3	-291	32.9	799.08	SLU 79	24.29	Si
ini.	3	-2088	-441.99	799.08	SLU 78	1.81	Si
fin.	3	-156	35.14	799.08	SLU 78	22.74	Si
ini.	3	-2317	-467.15	799.08	SLU 83	1.71	Si
fin.	3	-275	36.92	799.08	SLU 83	21.64	Si
ini.	3	-2156	-452.7	799.08	SLU 84	1.77	Si
fin.	3	-155	38.99	799.08	SLU 84	20.49	Si
ini.	3	-2127	-446.27	799.08	SLU 82	1.79	Si
fin.	3	-145	38.16	799.08	SLU 82	20.94	Si
ini.	3	-2218	-450.01	799.08	SLU 74	1.78	Si
fin.	3	-265	32.24	799.08	SLU 74	24.78	Si
ini.	3	-2075	-437.07	799.08	SLU 80	1.83	Si
fin.	3	-172	34.97	799.08	SLU 80	22.85	Si
ini.	3	-2287	-460.72	799.08	SLU 81	1.73	Si
fin.	3	-264	36.09	799.08	SLU 81	22.14	Si
ini.	3	-2248	-456.44	799.08	SLU 77	1.75	Si
fin.	3	-275	33.07	799.08	SLU 77	24.16	Si

Verifiche a taglio delle travi in muratura secondo §C8.7.1.3.1 in combinazioni non sismiche

Sezione	γM	N	M	V	Vt	Vp	Vt fess. diag.	Vt,lim	Comb.	c.s.	Verifica
ini.	3	-2127	-446.27	4236			1244	459	SLU 82	0.11	No
fin.	3	-145	38.16	-1060			650	251	SLU 82	0.24	No
ini.	3	-1908	-414.58	4006			1179	441	SLU 73	0.11	No
fin.	3	-71	34.69	-1045			628	240	SLU 73	0.23	No
ini.	3	-2058	-435.56	4120			1224	453	SLU 75	0.11	No
fin.	3	-145	34.31	-1036			650	251	SLU 75	0.24	No
ini.	3	-2156	-452.7	4287			1253	461	SLU 84	0.11	No
fin.	3	-155	38.99	-1064			653	252	SLU 84	0.24	No
ini.	3	-1938	-421.01	4057			1188	443	SLU 76	0.11	No
fin.	3	-81	35.52	-1049			631	241	SLU 76	0.23	No
ini.	3	-2317	-467.15	4308			1302	474	SLU 83	0.11	No
fin.	3	-275	36.92	-1021			689	269	SLU 83	0.26	No
ini.	3	-2248	-456.44	4192			1281	468	SLU 77	0.11	No
fin.	3	-275	33.07	-997			689	269	SLU 77	0.27	No
ini.	3	-2287	-460.72	4257			1293	472	SLU 81	0.11	No
fin.	3	-264	36.09	-1017			686	268	SLU 81	0.26	No
ini.	3	-2088	-441.99	4171			1233	456	SLU 78	0.11	No
fin.	3	-156	35.14	-1040			653	252	SLU 78	0.24	No
ini.	3	-2075	-437.07	4121			1229	454	SLU 80	0.11	No
fin.	3	-172	34.97	-1025			658	255	SLU 80	0.25	No

Verifiche a pressoflessione delle travi in muratura in combinazioni sismiche

Sezione	γM	N	M	Mu	Comb.	c.s.	Verifica
ini.	2	2550	537.38	1198.62	SLV 1	2.23	Si
fin.	2	-3276	-871.11	1198.62	SLV 1	1.38	Si
ini.	2	-3793	-622.03	1198.62	SLV 11	1.93	Si
fin.	2	1283	443.69	1198.62	SLV 11	2.7	Si
ini.	2	-3793	-622.03	1198.62	SLV 12	1.93	Si
fin.	2	1283	443.69	1198.62	SLV 12	2.7	Si
ini.	2	-5542	-1141.68	1198.62	SLV 16	1.05	Si
fin.	2	2842	904.02	1198.62	SLV 16	1.33	Si
ini.	2	2550	537.38	1198.62	SLV 2	2.23	Si
fin.	2	-3276	-871.11	1198.62	SLV 2	1.38	Si
ini.	2	1836	492.53	1198.62	SLV 3	2.43	Si
fin.	2	-2892	-764.98	1198.62	SLV 3	1.57	Si
ini.	2	-4828	-1096.83	1198.62	SLV 14	1.09	Si
fin.	2	2459	797.89	1198.62	SLV 14	1.5	Si
ini.	2	1836	492.53	1198.62	SLV 4	2.43	Si
fin.	2	-2892	-764.98	1198.62	SLV 4	1.57	Si
ini.	2	-5542	-1141.68	1198.62	SLV 15	1.05	Si
fin.	2	2842	904.02	1198.62	SLV 15	1.33	Si
ini.	2	-4828	-1096.83	1198.62	SLV 13	1.09	Si

Sezione	γM	N	M	Mu	Comb.	c.s.	Verifica
fin.	2	2459	797.89	1198.62	SLV 13	1.5	Si

Verifiche a taglio delle travi in muratura secondo §C8.7.1.3.1 in combinazioni sismiche

Sezione	γM	N	M	V	Vt	Vp	Vt fess. diag.	Vt,lim	Comb.	c.s.	Verifica
ini.	2	-5542	-1141.68	7244			2572	858	SLV 16	0.12	No
fin.	2	2842	904.02	3790			910	0	SLV 16	0	No
ini.	2	1836	492.53	-2201			910	0	SLV 4	0	No
fin.	2	-2892	-764.98	-4571			1777	663	SLV 4	0.15	No
ini.	2	-5542	-1141.68	7244			2572	858	SLV 15	0.12	No
fin.	2	2842	904.02	3790			910	0	SLV 15	0	No
ini.	2	-4828	-1096.83	7725			2358	810	SLV 14	0.1	No
fin.	2	2459	797.89	3209			910	0	SLV 14	0	No
ini.	2	2550	537.38	-1720			910	0	SLV 2	0	No
fin.	2	-3276	-871.11	-5152			1892	695	SLV 2	0.13	No
ini.	2	2550	537.38	-1720			910	0	SLV 1	0	No
fin.	2	-3276	-871.11	-5152			1892	695	SLV 1	0.13	No
ini.	2	-3793	-622.03	3377			2048	735	SLV 11	0.22	No
fin.	2	1283	443.69	1541			910	0	SLV 11	0	No
ini.	2	-3793	-622.03	3377			2048	735	SLV 12	0.22	No
fin.	2	1283	443.69	1541			910	0	SLV 12	0	No
ini.	2	-4828	-1096.83	7725			2358	810	SLV 13	0.1	No
fin.	2	2459	797.89	3209			910	0	SLV 13	0	No
ini.	2	1836	492.53	-2201			910	0	SLV 3	0	No
fin.	2	-2892	-764.98	-4571			1777	663	SLV 3	0.15	No

Tabella dei coefficienti di sicurezza minimi

Stato limite	Coeff.s.	Comb.	Verifica
PF_SLV	1.05	SLV 15	Si
V_SLV	0	SLV 1	No
PF_SLU	1.711	SLU 83	Si
V_SLU	0.108	SLU 84	No

Trave di accoppiamento 104

Verifiche condotte secondo D.M. 17-01-18 (N.T.C.)

Dati geometrici

X ini.	Y ini.	Z ini.inf.	Z ini.sup.	H ini.	X fin.	Y fin.	Z fin.inf.	Z fin.sup	H fin.	Luce	Spessore	R. Trazione
-1.958	5.948	5	5.9	0.9	-2.958	5.948	5	5.9	0.9	1	0.28	30000

Caratteristiche del materiale

(Circolare 7 21-01-19 C8.5.I) Muratura in mattoni pieni e malta di calce LC2_Corti

fb_	fhk	fvk0	fhmedio	τ0	fv0	μ	ϕ	fvk,lim	E	G	FC
120000			172500	9000	20000	0.577	0.767	6500	320000000	128000000	1.2

Verifiche a pressoflessione delle travi in muratura in combinazioni non sismiche

Sezione	γM	N	M	Mu	Comb.	c.s.	Verifica
ini.	3	-740	-81.74	1150.68	SLU 79	14.08	Si
fin.	3	-2184	465.86	1150.68	SLU 79	2.47	Si
ini.	3	-789	-61.06	1150.68	SLU 84	18.85	Si
fin.	3	-2155	438.83	1150.68	SLU 84	2.62	Si
ini.	3	-755	-77.82	1150.68	SLU 77	14.79	Si
fin.	3	-2194	464.85	1150.68	SLU 77	2.48	Si
ini.	3	-720	-68.81	1150.68	SLU 70	16.72	Si
fin.	3	-2037	430.53	1150.68	SLU 70	2.67	Si
ini.	3	-740	-80.93	1150.68	SLU 78	14.22	Si
fin.	3	-2189	467.06	1150.68	SLU 78	2.46	Si
ini.	3	-705	-72.74	1150.68	SLU 72	15.82	Si
fin.	3	-2028	431.54	1150.68	SLU 72	2.67	Si
ini.	3	-805	-57.94	1150.68	SLU 83	19.86	Si
fin.	3	-2160	436.62	1150.68	SLU 83	2.64	Si
ini.	3	-736	-65.69	1150.68	SLU 69	17.52	Si
fin.	3	-2042	428.32	1150.68	SLU 69	2.69	Si
ini.	3	-724	-84.86	1150.68	SLU 80	13.56	Si
fin.	3	-2180	468.07	1150.68	SLU 80	2.46	Si
ini.	3	-720	-69.62	1150.68	SLU 71	16.53	Si
fin.	3	-2033	429.33	1150.68	SLU 71	2.68	Si

Verifiche a taglio delle travi in muratura secondo §C8.7.1.3.1 in combinazioni non sismiche

Sezione	γM	N	M	V	Vt	Vp	Vt fess. diag.	Vt,lim	Comb.	c.s.	Verifica
ini.	3	-720	-68.81	-303			1133	448	SLU 70	1.48	Si
fin.	3	-2037	430.53	2098			1607	608	SLU 70	0.29	No
ini.	3	-720	-69.62	-293			1133	448	SLU 71	1.53	Si
fin.	3	-2033	429.33	2085			1605	608	SLU 71	0.29	No
ini.	3	-789	-61.06	-314			1158	458	SLU 84	1.46	Si
fin.	3	-2155	438.83	2147			1649	621	SLU 84	0.29	No
ini.	3	-805	-57.94	-332			1163	460	SLU 83	1.39	Si
fin.	3	-2160	436.62	2142			1651	621	SLU 83	0.29	No
ini.	3	-740	-81.74	-255			1140	451	SLU 79	1.77	Si
fin.	3	-2184	465.86	2247			1660	624	SLU 79	0.28	No
ini.	3	-740	-80.93	-265			1140	451	SLU 78	1.7	Si
fin.	3	-2189	467.06	2261			1661	624	SLU 78	0.28	No
ini.	3	-724	-84.86	-237			1134	449	SLU 80	1.89	Si
fin.	3	-2180	468.07	2252			1658	623	SLU 80	0.28	No
ini.	3	-705	-72.74	-275			1127	446	SLU 72	1.62	Si
fin.	3	-2028	431.54	2090			1603	607	SLU 72	0.29	No

Sezione	γM	N	M	V	Vt	Vp	Vt fess. diag.	Vt,lim	Comb.	c.s.	Verifica
ini.	3	-736	-65.69	-321			1138	450	SLU 69	1.4	Si
fin.	3	-2042	428.32	2093			1609	609	SLU 69	0.29	No
ini.	3	-755	-77.82	-283			1145	453	SLU 77	1.6	Si
fin.	3	-2194	464.85	2256			1663	625	SLU 77	0.28	No

Verifiche a pressoflessione delle travi in muratura in combinazioni sismiche

Sezione	γM	N	M	Mu	Comb.	c.s.	Verifica
ini.	2	-4074	1168.43	1726.01	SLV 4	1.48	Si
fin.	2	1274	-1319.03	1726.01	SLV 4	1.31	Si
ini.	2	-3569	1541.87	1726.01	SLV 2	1.12	Si
fin.	2	2148	-1829.77	1726.01	SLV 2	0.94	No
ini.	2	2786	-1185.07	1726.01	SLV 13	1.46	Si
fin.	2	-4135	1841.11	1726.01	SLV 13	0.94	No
ini.	2	-4074	1168.43	1726.01	SLV 3	1.48	Si
fin.	2	1274	-1319.03	1726.01	SLV 3	1.31	Si
ini.	2	-3569	1541.87	1726.01	SLV 1	1.12	Si
fin.	2	2148	-1829.77	1726.01	SLV 1	0.94	No
ini.	2	2786	-1185.07	1726.01	SLV 14	1.46	Si
fin.	2	-4135	1841.11	1726.01	SLV 14	0.94	No
ini.	2	-533	-1039.76	1726.01	SLV 12	1.66	Si
fin.	2	-3831	1662.91	1726.01	SLV 12	1.04	Si
ini.	2	-533	-1039.76	1726.01	SLV 11	1.66	Si
fin.	2	-3831	1662.91	1726.01	SLV 11	1.04	Si
ini.	2	2281	-1558.51	1726.01	SLV 15	1.11	Si
fin.	2	-5010	2351.85	1726.01	SLV 15	0.73	No
ini.	2	2281	-1558.51	1726.01	SLV 16	1.11	Si
fin.	2	-5010	2351.85	1726.01	SLV 16	0.73	No

Verifiche a taglio delle travi in muratura secondo §C8.7.1.3.1 in combinazioni sismiche

Sezione	γM	N	M	V	Vt	Vp	Vt fess. diag.	Vt,lim	Comb.	c.s.	Verifica
ini.	2	1152	205.04	3183			1310	145	SLV 10	0.05	No
fin.	2	-915	-39.56	1829			1640	648	SLV 10	0.35	No
ini.	2	-3569	1541.87	-5234			2595	965	SLV 2	0.18	No
fin.	2	2148	-1829.77	-5741			1310	0	SLV 2	0	No
ini.	2	2281	-1558.51	4497			1310	0	SLV 15	0	No
fin.	2	-5010	2351.85	8410			3114	1100	SLV 15	0.13	No
ini.	2	2786	-1185.07	5648			1310	0	SLV 14	0	No
fin.	2	-4135	1841.11	7514			2799	1020	SLV 14	0.14	No
ini.	2	2281	-1558.51	4497			1310	0	SLV 16	0	No
fin.	2	-5010	2351.85	8410			3114	1100	SLV 16	0.13	No
ini.	2	2786	-1185.07	5648			1310	0	SLV 13	0	No
fin.	2	-4135	1841.11	7514			2799	1020	SLV 13	0.14	No
ini.	2	-4074	1168.43	-6386			2777	1014	SLV 3	0.16	No
fin.	2	1274	-1319.03	-4845			1310	0	SLV 3	0	No
ini.	2	1152	205.04	3183			1310	145	SLV 9	0.05	No
fin.	2	-915	-39.56	1829			1640	648	SLV 9	0.35	No
ini.	2	-3569	1541.87	-5234			2595	965	SLV 1	0.18	No
fin.	2	2148	-1829.77	-5741			1310	0	SLV 1	0	No
ini.	2	-4074	1168.43	-6386			2777	1014	SLV 4	0.16	No
fin.	2	1274	-1319.03	-4845			1310	0	SLV 4	0	No

Tabella dei coefficienti di sicurezza minimi

Stato limite	Coeff.s.	Comb.	Verifica
PF_SLV	0.734	SLV 15	No
V_SLV	0	SLV 1	No
PF_SLU	2.458	SLU 80	Si
V_SLU	0.276	SLU 78	No

Trave di accoppiamento 105

Verifiche condotte secondo D.M. 17-01-18 (N.T.C.)

Dati geometrici

X ini.	Y ini.	Z ini.inf.	Z ini.sup.	H ini.	X fin.	Y fin.	Z fin.inf.	Z fin.sup	H fin.	Luce	Spessore	R. Trazione
-1.958	5.948	7.8	8.55	0.75	-2.958	5.948	7.8	8.55	0.75	1	0.28	30000

Caratteristiche del materiale

(Circolare 7 21-01-19 C8.5.I) Muratura in mattoni pieni e malta di calce LC2_Corti

fb_	fhk	fvk0	fhmedio	τ0	fv0	μ	ϕ	fvk,lim	E	G	FC
120000			172500	9000	20000	0.577	0.767	6500	320000000	128000000	1.2

Verifiche a pressoflessione delle travi in muratura in combinazioni non sismiche

Sezione	γM	N	M	Mu	Comb.	c.s.	Verifica
ini.	3	-1144	-458.34	799.08	SLU 78	1.74	Si
fin.	3	-35	55.15	799.08	SLU 78	14.49	Si
ini.	3	-1064	-426.1	799.08	SLU 76	1.88	Si
fin.	3	-84	30.59	799.08	SLU 76	26.12	Si
ini.	3	-1056	-426.15	799.08	SLU 75	1.88	Si
fin.	3	-93	24.27	799.08	SLU 75	32.92	Si
ini.	3	-1139	-457.05	799.08	SLU 77	1.75	Si
fin.	3	-43	52.03	799.08	SLU 77	15.36	Si
ini.	3	-1026	-412.66	799.08	SLU 82	1.94	Si
fin.	3	-157	-2.49	799.08	SLU 82	320.61	Si
ini.	3	-1051	-424.86	799.08	SLU 74	1.88	Si
fin.	3	-101	21.15	799.08	SLU 74	37.78	Si
ini.	3	-1149	-457.43	799.08	SLU 80	1.75	Si

Sezione	γM	N	M	Mu	Comb.	c.s.	Verifica
fin.	3	-31	59.39	799.08	SLU 80	13.45	Si
ini.	3	-1114	-444.86	799.08	SLU 84	1.8	Si
fin.	3	-100	28.39	799.08	SLU 84	28.15	Si
ini.	3	-1109	-443.56	799.08	SLU 83	1.8	Si
fin.	3	-107	25.27	799.08	SLU 83	31.62	Si
ini.	3	-1144	-456.13	799.08	SLU 79	1.75	Si
fin.	3	-38	56.27	799.08	SLU 79	14.2	Si

Verifiche a taglio delle travi in muratura secondo §C8.7.1.3.1 in combinazioni non sismiche

Sezione	γM	N	M	V	Vt	Vp	Vt fess. diag.	Vt,lim	Comb.	c.s.	Verifica
ini.	3	-1144	-458.34	3134			950	370	SLU 78	0.12	No
fin.	3	-35	55.15	-877			617	234	SLU 78	0.27	No
ini.	3	-1144	-456.13	3116			950	371	SLU 79	0.12	No
fin.	3	-38	56.27	-866			618	234	SLU 79	0.27	No
ini.	3	-1022	-411.37	2921			913	358	SLU 81	0.12	No
fin.	3	-165	-5.61	-1077			656	254	SLU 81	0.24	No
ini.	3	-1056	-426.15	2965			923	362	SLU 75	0.12	No
fin.	3	-93	24.27	-958			634	243	SLU 75	0.25	No
ini.	3	-1026	-412.66	2926			914	358	SLU 82	0.12	No
fin.	3	-157	-2.49	-1065			654	253	SLU 82	0.24	No
ini.	3	-1114	-444.86	3096			941	367	SLU 84	0.12	No
fin.	3	-100	28.39	-984			636	244	SLU 84	0.25	No
ini.	3	-1149	-457.43	3121			951	371	SLU 80	0.12	No
fin.	3	-31	59.39	-854			616	233	SLU 80	0.27	No
ini.	3	-1051	-424.86	2959			922	361	SLU 74	0.12	No
fin.	3	-101	21.15	-970			637	244	SLU 74	0.25	No
ini.	3	-1109	-443.56	3090			939	367	SLU 83	0.12	No
fin.	3	-107	25.27	-995			639	245	SLU 83	0.25	No
ini.	3	-1139	-457.05	3128			948	370	SLU 77	0.12	No
fin.	3	-43	52.03	-889			619	235	SLU 77	0.26	No

Verifiche a pressoflessione delle travi in muratura in combinazioni sismiche

Sezione	γM	N	M	Mu	Comb.	c.s.	Verifica
ini.	2	-3290	-1221.63	1198.62	SLV 13	0.98	No
fin.	2	1908	1166.2	1198.62	SLV 13	1.03	Si
ini.	2	-4235	-1481.77	1198.62	SLV 15	0.81	No
fin.	2	2530	1465.92	1198.62	SLV 15	0.82	No
ini.	2	2924	945.87	1198.62	SLV 1	1.27	Si
fin.	2	-2742	-1478.19	1198.62	SLV 1	0.81	No
ini.	2	-3162	-1026.65	1198.62	SLV 11	1.17	Si
fin.	2	1628	890.07	1198.62	SLV 11	1.35	Si
ini.	2	1980	685.73	1198.62	SLV 3	1.75	Si
fin.	2	-2120	-1178.46	1198.62	SLV 3	1.02	Si
ini.	2	-3290	-1221.63	1198.62	SLV 14	0.98	No
fin.	2	1908	1166.2	1198.62	SLV 14	1.03	Si
ini.	2	-3162	-1026.65	1198.62	SLV 12	1.17	Si
fin.	2	1628	890.07	1198.62	SLV 12	1.35	Si
ini.	2	-4235	-1481.77	1198.62	SLV 16	0.81	No
fin.	2	2530	1465.92	1198.62	SLV 16	0.82	No
ini.	2	2924	945.87	1198.62	SLV 2	1.27	Si
fin.	2	-2742	-1478.19	1198.62	SLV 2	0.81	No
ini.	2	1980	685.73	1198.62	SLV 4	1.75	Si
fin.	2	-2120	-1178.46	1198.62	SLV 4	1.02	Si

Verifiche a taglio delle travi in muratura secondo §C8.7.1.3.1 in combinazioni sismiche

Sezione	γM	N	M	V	Vt	Vp	Vt fess. diag.	Vt,lim	Comb.	c.s.	Verifica
ini.	2	2924	945.87	-3594			910	0	SLV 2	0	No
fin.	2	-2742	-1478.19	-4564			1732	651	SLV 2	0.14	No
ini.	2	-3162	-1026.65	5158			1858	686	SLV 12	0.13	No
fin.	2	1628	890.07	-449			910	0	SLV 12	0	No
ini.	2	-3162	-1026.65	5158			1858	686	SLV 11	0.13	No
fin.	2	1628	890.07	-449			910	0	SLV 11	0	No
ini.	2	1851	490.74	-1361			910	0	SLV 5	0	No
fin.	2	-1840	-902.34	-991			1462	568	SLV 5	0.57	No
ini.	2	-3290	-1221.63	6327			1897	696	SLV 14	0.11	No
fin.	2	1908	1166.2	3705			910	0	SLV 14	0	No
ini.	2	2924	945.87	-3594			910	0	SLV 1	0	No
fin.	2	-2742	-1478.19	-4564			1732	651	SLV 1	0.14	No
ini.	2	1851	490.74	-1361			910	0	SLV 6	0	No
fin.	2	-1840	-902.34	-991			1462	568	SLV 6	0.57	No
ini.	2	-3290	-1221.63	6327			1897	696	SLV 13	0.11	No
fin.	2	1908	1166.2	3705			910	0	SLV 13	0	No
ini.	2	1980	685.73	-2531			910	0	SLV 3	0	No
fin.	2	-2120	-1178.46	-5145			1546	595	SLV 3	0.12	No
ini.	2	1980	685.73	-2531			910	0	SLV 4	0	No
fin.	2	-2120	-1178.46	-5145			1546	595	SLV 4	0.12	No

Tabella dei coefficienti di sicurezza minimi

Stato limite	Coeff.s.	Comb.	Verifica
PF_SLV	0.809	SLV 15	No
V_SLV	0	SLV 1	No
PF_SLU	1.743	SLU 78	Si
V_SLU	0.118	SLU 78	No

Trave di accoppiamento 106

Verifiche condotte secondo D.M. 17-01-18 (N.T.C.)

Dati geometrici

X ini.	Y ini.	Z ini.inf.	Z ini.sup.	H ini.	X fin.	Y fin.	Z fin.inf.	Z fin.sup	H fin.	Luce	Spessore	R. Trazione
-0.117	0.001	7.8	8.55	0.75	-0.117	1.001	7.8	8.55	0.75	1	0.28	30000

Caratteristiche del materiale

(Circolare 7 21-01-19 C8.5.I) Muratura in mattoni pieni e malta di calce LC2_Corti

fb_	fhk	fvk0	fhmedio	τ0	fv0	μ	ϕ	fvk,lim	E	G	FC
120000			172500	9000	20000	0.577	0.767	6500	320000000	128000000	1.2

Verifiche a pressoflessione delle travi in muratura in combinazioni non sismiche

Sezione	γM	N	M	Mu	Comb.	c.s.	Verifica
ini.	3	1100	-587.81	799.08	SLU 75	1.36	Si
fin.	3	2707	293.85	799.08	SLU 75	2.72	Si
ini.	3	1104	-619.65	799.08	SLU 82	1.29	Si
fin.	3	2843	325.76	799.08	SLU 82	2.45	Si
ini.	3	1108	-590.65	799.08	SLU 76	1.35	Si
fin.	3	2740	305.46	799.08	SLU 76	2.62	Si
ini.	3	1075	-603.32	799.08	SLU 83	1.32	Si
fin.	3	2723	296.01	799.08	SLU 83	2.7	Si
ini.	3	1095	-590.73	799.08	SLU 78	1.35	Si
fin.	3	2696	289.27	799.08	SLU 78	2.76	Si
ini.	3	1113	-587.73	799.08	SLU 73	1.36	Si
fin.	3	2751	310.04	799.08	SLU 73	2.58	Si
ini.	3	1071	-571.48	799.08	SLU 77	1.4	Si
fin.	3	2587	264.1	799.08	SLU 77	3.03	Si
ini.	3	1086	-580.74	799.08	SLU 80	1.38	Si
fin.	3	2657	284.1	799.08	SLU 80	2.81	Si
ini.	3	1080	-600.4	799.08	SLU 81	1.33	Si
fin.	3	2734	300.59	799.08	SLU 81	2.66	Si
ini.	3	1099	-622.57	799.08	SLU 84	1.28	Si
fin.	3	2831	321.18	799.08	SLU 84	2.49	Si

Verifiche a taglio delle travi in muratura secondo §C8.7.1.3.1 in combinazioni non sismiche

Sezione	γM	N	M	V	Vt	Vp	Vt fess. diag.	Vt,lim	Comb.	c.s.	Verifica
ini.	3	1084	-496.92	2994			607	0	SLU 55	0	No
fin.	3	2399	241.2	-787			607	0	SLU 55	0	No
ini.	3	1072	-497	3023			607	0	SLU 57	0	No
fin.	3	2355	225.01	-891			607	0	SLU 57	0	No
ini.	3	1039	-467.76	2901			607	0	SLU 58	0	No
fin.	3	2207	194.67	-982			607	0	SLU 58	0	No
ini.	3	1063	-487.01	2972			607	0	SLU 59	0	No
fin.	3	2316	219.84	-890			607	0	SLU 59	0	No
ini.	3	1047	-477.76	2952			607	0	SLU 56	0	No
fin.	3	2246	199.84	-984			607	0	SLU 56	0	No
ini.	3	1081	-525.92	3118			607	0	SLU 61	0	No
fin.	3	2502	261.5	-732			607	0	SLU 61	0	No
ini.	3	1077	-494.08	2997			607	0	SLU 54	0	No
fin.	3	2366	229.59	-850			607	0	SLU 54	0	No
ini.	3	800	-299.72	1949			607	0	SLU 1	0	No
fin.	3	1511	115.41	-792			607	0	SLU 1	0	No
ini.	3	1053	-474.84	2926			607	0	SLU 53	0	No
fin.	3	2257	204.42	-942			607	0	SLU 53	0	No
ini.	3	1057	-506.67	3047			607	0	SLU 60	0	No
fin.	3	2393	236.33	-824			607	0	SLU 60	0	No

Verifiche a pressoflessione delle travi in muratura in combinazioni sismiche

Sezione	γM	N	M	Mu	Comb.	c.s.	Verifica
ini.	2	1509	454.64	1198.62	SLV 7	2.64	Si
fin.	2	-608	-544.77	1198.62	SLV 7	2.2	Si
ini.	2	825	-805.75	1198.62	SLV 13	1.49	Si
fin.	2	3489	473.18	1198.62	SLV 13	2.53	Si
ini.	2	114	-1167.32	1198.62	SLV 10	1.03	Si
fin.	2	4043	855.64	1198.62	SLV 10	1.4	Si
ini.	2	825	-805.75	1198.62	SLV 14	1.49	Si
fin.	2	3489	473.18	1198.62	SLV 14	2.53	Si
ini.	2	-33	-1031.41	1198.62	SLV 6	1.16	Si
fin.	2	3334	784.64	1198.62	SLV 6	1.53	Si
ini.	2	1509	454.64	1198.62	SLV 8	2.64	Si
fin.	2	-608	-544.77	1198.62	SLV 8	2.2	Si
ini.	2	1656	318.74	1198.62	SLV 11	3.76	Si
fin.	2	101	-473.77	1198.62	SLV 11	2.53	Si
ini.	2	-33	-1031.41	1198.62	SLV 5	1.16	Si
fin.	2	3334	784.64	1198.62	SLV 5	1.53	Si
ini.	2	114	-1167.32	1198.62	SLV 9	1.03	Si
fin.	2	4043	855.64	1198.62	SLV 9	1.4	Si
ini.	2	1656	318.74	1198.62	SLV 12	3.76	Si
fin.	2	101	-473.77	1198.62	SLV 12	2.53	Si

Verifiche a taglio delle travi in muratura secondo §C8.7.1.3.1 in combinazioni sismiche

Sezione	γM	N	M	V	Vt	Vp	Vt fess. diag.	Vt,lim	Comb.	c.s.	Verifica
ini.	2	1509	454.64	-692			910	0	SLV 8	0	No
fin.	2	-608	-544.77	-3418			1092	430	SLV 8	0.13	No
ini.	2	114	-1167.32	5097			910	323	SLV 10	0.06	No
fin.	2	4043	855.64	2003			910	0	SLV 10	0	No
ini.	2	335	-352.74	2177			910	283	SLV 1	0.13	No
fin.	2	1128	236.51	-712			910	0	SLV 1	0	No
ini.	2	114	-1167.32	5097			910	323	SLV 9	0.06	No
fin.	2	4043	855.64	2003			910	0	SLV 9	0	No
ini.	2	1656	318.74	-200			910	0	SLV 11	0	No

Sezione	γM	N	M	V	Vt	Vp	Vt fess. diag.	Vt,lim	Comb.	c.s.	Verifica
fin.	2	101	-473.77	-2968			910	326	SLV 11	0.11	No
ini.	2	-33	-1031.41	4605			920	348	SLV 5	0.08	No
fin.	2	3334	784.64	1553			910	0	SLV 5	0	No
ini.	2	1656	318.74	-200			910	0	SLV 12	0	No
fin.	2	101	-473.77	-2968			910	326	SLV 12	0.11	No
ini.	2	335	-352.74	2177			910	283	SLV 2	0.13	No
fin.	2	1128	236.51	-712			910	0	SLV 2	0	No
ini.	2	1509	454.64	-692			910	0	SLV 7	0	No
fin.	2	-608	-544.77	-3418			1092	430	SLV 7	0.13	No
ini.	2	-33	-1031.41	4605			920	348	SLV 6	0.08	No
fin.	2	3334	784.64	1553			910	0	SLV 6	0	No

Tabella dei coefficienti di sicurezza minimi

Stato limite	Coeff.s.	Comb.	Verifica
PF_SLV	1.027	SLV 9	Si
V_SLV	0	SLV 1	No
PF_SLU	1.284	SLU 84	Si
V_SLU	0	SLU 1	No

Trave di accoppiamento 107

Verifiche condotte secondo D.M. 17-01-18 (N.T.C.)

Dati geometrici

X ini.	Y ini.	Z ini.inf.	Z ini.sup.	H ini.	X fin.	Y fin.	Z fin.inf.	Z fin.sup	H fin.	Luce	Spessore	R. Trazione
-21.878	5.937	8.55	9.45	0.9	-22.878	5.937	8.55	9.45	0.9	1	0.28	30000

Caratteristiche del materiale

(Circolare 7 21-01-19 C8.5.I) Muratura in mattoni pieni e malta di calce LC2_Corti

fb_	fhk	fvk0	fhmedio	τ0	fv0	μ	ϕ	fvk,lim	E	G	FC
120000			172500	9000	20000	0.577	0.767	6500	320000000	128000000	1.2

Verifiche a pressoflessione delle travi in muratura in combinazioni non sismiche

Sezione	γM	N	M	Mu	Comb.	c.s.	Verifica
ini.	3	-292	172.99	1150.68	SLU 82	6.65	Si
fin.	3	377	49.55	1150.68	SLU 82	23.22	Si
ini.	3	-290	175.17	1150.68	SLU 76	6.57	Si
fin.	3	374	45.35	1150.68	SLU 76	25.37	Si
ini.	3	-277	173.45	1150.68	SLU 75	6.63	Si
fin.	3	377	46.88	1150.68	SLU 75	24.54	Si
ini.	3	-295	180.55	1150.68	SLU 84	6.37	Si
fin.	3	401	47.86	1150.68	SLU 84	24.04	Si
ini.	3	-281	181	1150.68	SLU 78	6.36	Si
fin.	3	401	45.19	1150.68	SLU 78	25.46	Si
ini.	3	-272	176.38	1150.68	SLU 77	6.52	Si
fin.	3	387	48.75	1150.68	SLU 77	23.6	Si
ini.	3	-269	168.82	1150.68	SLU 74	6.82	Si
fin.	3	363	50.44	1150.68	SLU 74	22.81	Si
ini.	3	-287	179.64	1150.68	SLU 80	6.41	Si
fin.	3	388	46.03	1150.68	SLU 80	25	Si
ini.	3	-287	175.92	1150.68	SLU 83	6.54	Si
fin.	3	387	51.42	1150.68	SLU 83	22.38	Si
ini.	3	-279	175.01	1150.68	SLU 79	6.57	Si
fin.	3	374	49.59	1150.68	SLU 79	23.2	Si

Verifiche a taglio delle travi in muratura secondo §C8.7.1.3.1 in combinazioni non sismiche

Sezione	γM	N	M	V	Vt	Vp	Vt fess. diag.	Vt,lim	Comb.	c.s.	Verifica
ini.	3	-245	156.63	-1102			962	374	SLU 69	0.34	No
fin.	3	301	48.43	1429			873	263	SLU 69	0.18	No
ini.	3	-269	168.82	-1103			970	378	SLU 74	0.34	No
fin.	3	363	50.44	1323			873	248	SLU 74	0.19	No
ini.	3	-295	180.55	-1125			980	382	SLU 84	0.34	No
fin.	3	401	47.86	1255			873	238	SLU 84	0.19	No
ini.	3	-281	181	-1184			975	380	SLU 78	0.32	No
fin.	3	401	45.19	1359			873	238	SLU 78	0.17	No
ini.	3	-277	173.45	-1118			973	379	SLU 75	0.34	No
fin.	3	377	46.88	1299			873	244	SLU 75	0.19	No
ini.	3	-279	175.01	-1147			974	379	SLU 79	0.33	No
fin.	3	374	49.59	1359			873	245	SLU 79	0.18	No
ini.	3	-287	179.64	-1162			977	381	SLU 80	0.33	No
fin.	3	388	46.03	1335			873	241	SLU 80	0.18	No
ini.	3	-272	176.38	-1168			971	378	SLU 77	0.32	No
fin.	3	387	48.75	1383			873	241	SLU 77	0.17	No
ini.	3	-254	161.25	-1117			965	375	SLU 70	0.34	No
fin.	3	315	44.87	1405			873	260	SLU 70	0.18	No
ini.	3	-287	175.92	-1110			977	381	SLU 83	0.34	No
fin.	3	387	51.42	1279			873	241	SLU 83	0.19	No

Verifiche a pressoflessione delle travi in muratura in combinazioni sismiche

Sezione	γM	N	M	Mu	Comb.	c.s.	Verifica
ini.	2	2612	-1243.03	1726.01	SLV 13	1.39	Si
fin.	2	-3889	821.39	1726.01	SLV 13	2.1	Si
ini.	2	-1944	1077.03	1726.01	SLV 7	1.6	Si
fin.	2	3057	-417.55	1726.01	SLV 7	4.13	Si
ini.	2	-2393	1090.34	1726.01	SLV 2	1.58	Si
fin.	2	3192	-592.8	1726.01	SLV 2	2.91	Si

Sezione	γM	N	M	Mu	Comb.	c.s.	Verifica
ini.	2	2011	-872.25	1726.01	SLV 16	1.98	Si
fin.	2	-2807	673.82	1726.01	SLV 16	2.56	Si
ini.	2	-2994	1461.13	1726.01	SLV 4	1.18	Si
fin.	2	4273	-740.36	1726.01	SLV 4	2.33	Si
ini.	2	-1944	1077.03	1726.01	SLV 8	1.6	Si
fin.	2	3057	-417.55	1726.01	SLV 8	4.13	Si
ini.	2	-2393	1090.34	1726.01	SLV 1	1.58	Si
fin.	2	3192	-592.8	1726.01	SLV 1	2.91	Si
ini.	2	-2994	1461.13	1726.01	SLV 3	1.18	Si
fin.	2	4273	-740.36	1726.01	SLV 3	2.33	Si
ini.	2	2011	-872.25	1726.01	SLV 15	1.98	Si
fin.	2	-2807	673.82	1726.01	SLV 15	2.56	Si
ini.	2	2612	-1243.03	1726.01	SLV 14	1.39	Si
fin.	2	-3889	821.39	1726.01	SLV 14	2.1	Si

Verifiche a taglio delle travi in muratura secondo §C8.7.1.3.1 in combinazioni sismiche

Sezione	γM	N	M	V	Vt	Vp	Vt fess. diag.	Vt,lim	Comb.	c.s.	Verifica
ini.	2	1562	-858.94	1934			1310	0	SLV 9	0	No
fin.	2	-2673	498.58	2063			2272	871	SLV 9	0.42	No
ini.	2	-2994	1461.13	-5944			2388	906	SLV 3	0.15	No
fin.	2	4273	-740.36	-2622			1310	0	SLV 3	0	No
ini.	2	1562	-858.94	1934			1310	0	SLV 10	0	No
fin.	2	-2673	498.58	2063			2272	871	SLV 10	0.42	No
ini.	2	2612	-1243.03	4487			1310	0	SLV 13	0	No
fin.	2	-3889	821.39	4569			2710	997	SLV 13	0.22	No
ini.	2	-2393	1090.34	-5220			2172	839	SLV 1	0.16	No
fin.	2	3192	-592.8	-2615			1310	0	SLV 1	0	No
ini.	2	-2393	1090.34	-5220			2172	839	SLV 2	0.16	No
fin.	2	3192	-592.8	-2615			1310	0	SLV 2	0	No
ini.	2	2612	-1243.03	4487			1310	0	SLV 14	0	No
fin.	2	-3889	821.39	4569			2710	997	SLV 14	0.22	No
ini.	2	-2994	1461.13	-5944			2388	906	SLV 4	0.15	No
fin.	2	4273	-740.36	-2622			1310	0	SLV 4	0	No
ini.	2	-1944	1077.03	-3391			2010	786	SLV 7	0.23	No
fin.	2	3057	-417.55	-116			1310	0	SLV 7	0	No
ini.	2	-1944	1077.03	-3391			2010	786	SLV 8	0.23	No
fin.	2	3057	-417.55	-116			1310	0	SLV 8	0	No

Tabella dei coefficienti di sicurezza minimi

Stato limite	Coeff.s.	Comb.	Verifica
PF_SLV	1.181	SLV 3	Si
V_SLV	0	SLV 1	No
PF_SLU	6.357	SLU 78	Si
V_SLU	0.175	SLU 77	No

Trave di accoppiamento 108

Verifiche condotte secondo D.M. 17-01-18 (N.T.C.)

Dati geometrici

X ini.	Y ini.	Z ini.inf.	Z ini.sup.	H ini.	X fin.	Y fin.	Z fin.inf.	Z fin.sup	H fin.	Luce	Spessore	R. Trazione
-21.878	5.937	11.35	12.05	0.7	-22.878	5.937	11.35	12.05	0.7	1	0.28	30000

Caratteristiche del materiale

(Circolare 7 21-01-19 C8.5.I) Muratura in mattoni pieni e malta di calce LC2_Corti

fb_	fhk	fvk0	fhmedio	τ0	fv0	μ	ϕ	fvk,lim	E	G	FC
120000			172500	9000	20000	0.577	0.767	6500	320000000	128000000	1.2

Verifiche a pressoflessione delle travi in muratura in combinazioni non sismiche

Sezione	γM	N	M	Mu	Comb.	c.s.	Verifica
ini.	3	232	-6.17	696.09	SLU 80	112.87	Si
fin.	3	-101	-189.46	696.09	SLU 80	3.67	Si
ini.	3	212	-5.07	696.09	SLU 84	137.35	Si
fin.	3	-146	-196.94	696.09	SLU 84	3.53	Si
ini.	3	180	-10.63	696.09	SLU 81	65.51	Si
fin.	3	-154	-187.18	696.09	SLU 81	3.72	Si
ini.	3	218	-3.33	696.09	SLU 76	208.79	Si
fin.	3	-125	-187.69	696.09	SLU 76	3.71	Si
ini.	3	261	-4.83	696.09	SLU 78	144.11	Si
fin.	3	-83	-192.65	696.09	SLU 78	3.61	Si
ini.	3	240	-5.35	696.09	SLU 75	130.02	Si
fin.	3	-101	-187.68	696.09	SLU 75	3.71	Si
ini.	3	221	-11.2	696.09	SLU 79	62.14	Si
fin.	3	-92	-184.67	696.09	SLU 79	3.77	Si
ini.	3	250	-9.87	696.09	SLU 77	70.56	Si
fin.	3	-74	-187.85	696.09	SLU 77	3.71	Si
ini.	3	191	-5.59	696.09	SLU 82	124.49	Si
fin.	3	-164	-191.98	696.09	SLU 82	3.63	Si
ini.	3	201	-10.1	696.09	SLU 83	68.9	Si
fin.	3	-137	-192.14	696.09	SLU 83	3.62	Si

Verifiche a taglio delle travi in muratura secondo §C8.7.1.3.1 in combinazioni non sismiche

Sezione	γM	N	M	V	Vt	Vp	Vt fess. diag.	Vt,lim	Comb.	c.s.	Verifica
ini.	3	250	-9.87	736			528	156	SLU 77	0.21	No
fin.	3	-74	-187.85	-1333			549	210	SLU 77	0.16	No
ini.	3	240	-5.35	695			528	158	SLU 75	0.23	No

Sezione	γM	N	M	V	Vt	Vp	Vt fess. diag.	Vt,lim	Comb.	c.s.	Verifica
fin.	3	-101	-187.68	-1312			557	214	SLU 75	0.16	No
ini.	3	221	-11.2	730			528	162	SLU 79	0.22	No
fin.	3	-92	-184.67	-1311			554	212	SLU 79	0.16	No
ini.	3	191	-5.59	689			528	167	SLU 82	0.24	No
fin.	3	-164	-191.98	-1323			574	222	SLU 82	0.17	No
ini.	3	201	-10.1	729			528	165	SLU 83	0.23	No
fin.	3	-137	-192.14	-1344			567	219	SLU 83	0.16	No
ini.	3	232	-6.17	712			528	160	SLU 80	0.22	No
fin.	3	-101	-189.46	-1328			557	214	SLU 80	0.16	No
ini.	3	230	-10.39	713			528	160	SLU 74	0.22	No
fin.	3	-91	-182.89	-1295			554	212	SLU 74	0.16	No
ini.	3	218	-3.33	678			528	162	SLU 76	0.24	No
fin.	3	-125	-187.69	-1301			563	217	SLU 76	0.17	No
ini.	3	212	-5.07	712			528	164	SLU 84	0.23	No
fin.	3	-146	-196.94	-1361			569	220	SLU 84	0.16	No
ini.	3	261	-4.83	718			528	154	SLU 78	0.21	No
fin.	3	-83	-192.65	-1350			552	211	SLU 78	0.16	No

Verifiche a pressoflessione delle travi in muratura in combinazioni sismiche

Sezione	γM	N	M	Mu	Comb.	c.s.	Verifica
ini.	2	-1221	-677.79	1044.13	SLV 16	1.54	Si
fin.	2	887	531.89	1044.13	SLV 16	1.96	Si
ini.	2	1473	590.14	1044.13	SLV 7	1.77	Si
fin.	2	-990	-700.24	1044.13	SLV 7	1.49	Si
ini.	2	1489	653.82	1044.13	SLV 1	1.6	Si
fin.	2	-1002	-760.97	1044.13	SLV 1	1.37	Si
ini.	2	2002	875.32	1044.13	SLV 4	1.19	Si
fin.	2	-1359	-976.63	1044.13	SLV 4	1.07	Si
ini.	2	-1735	-899.29	1044.13	SLV 14	1.16	Si
fin.	2	1244	747.54	1044.13	SLV 14	1.4	Si
ini.	2	-1735	-899.29	1044.13	SLV 13	1.16	Si
fin.	2	1244	747.54	1044.13	SLV 13	1.4	Si
ini.	2	1473	590.14	1044.13	SLV 8	1.77	Si
fin.	2	-990	-700.24	1044.13	SLV 8	1.49	Si
ini.	2	-1221	-677.79	1044.13	SLV 15	1.54	Si
fin.	2	887	531.89	1044.13	SLV 15	1.96	Si
ini.	2	2002	875.32	1044.13	SLV 3	1.19	Si
fin.	2	-1359	-976.63	1044.13	SLV 3	1.07	Si
ini.	2	1489	653.82	1044.13	SLV 2	1.6	Si
fin.	2	-1002	-760.97	1044.13	SLV 2	1.37	Si

Verifiche a taglio delle travi in muratura secondo §C8.7.1.3.1 in combinazioni sismiche

Sezione	γM	N	M	V	Vt	Vp	Vt fess. diag.	Vt,lim	Comb.	c.s.	Verifica
ini.	2	-1735	-899.29	3288			1278	496	SLV 14	0.15	No
fin.	2	1244	747.54	2023			793	0	SLV 14	0	No
ini.	2	1489	653.82	-1581			793	0	SLV 2	0	No
fin.	2	-1002	-760.97	-3200			1073	424	SLV 2	0.13	No
ini.	2	-1735	-899.29	3288			1278	496	SLV 13	0.15	No
fin.	2	1244	747.54	2023			793	0	SLV 13	0	No
ini.	2	-1221	-677.79	2556			1135	447	SLV 16	0.17	No
fin.	2	887	531.89	1530			793	92	SLV 16	0.06	No
ini.	2	2002	875.32	-2313			793	0	SLV 3	0	No
fin.	2	-1359	-976.63	-3693			1173	461	SLV 3	0.12	No
ini.	2	-1221	-677.79	2556			1135	447	SLV 15	0.17	No
fin.	2	887	531.89	1530			793	92	SLV 15	0.06	No
ini.	2	2002	875.32	-2313			793	0	SLV 4	0	No
fin.	2	-1359	-976.63	-3693			1173	461	SLV 4	0.12	No
ini.	2	1489	653.82	-1581			793	0	SLV 1	0	No
fin.	2	-1002	-760.97	-3200			1073	424	SLV 1	0.13	No
ini.	2	1473	590.14	-1463			793	0	SLV 8	0	No
fin.	2	-990	-700.24	-2441			1070	423	SLV 8	0.17	No
ini.	2	1473	590.14	-1463			793	0	SLV 7	0	No
fin.	2	-990	-700.24	-2441			1070	423	SLV 7	0.17	No

Tabella dei coefficienti di sicurezza minimi

Stato limite	Coeff.s.	Comb.	Verifica
PF_SLV	1.069	SLV 3	Si
V_SLV	0	SLV 1	No
PF_SLU	3.535	SLU 84	Si
V_SLU	0.156	SLU 78	No

Trave di accoppiamento 109

Verifiche condotte secondo D.M. 17-01-18 (N.T.C.)

Dati geometrici

X ini.	Y ini.	Z ini.inf.	Z ini.sup.	H ini.	X fin.	Y fin.	Z fin.inf.	Z fin.sup	H fin.	Luce	Spessore	R. Trazione
-21.517	-3.183	8.55	9.45	0.9	-22.517	-3.183	8.55	9.45	0.9	1	0.28	30000

Caratteristiche del materiale

(Circolare 7 21-01-19 C8.5.I) Muratura in mattoni pieni e malta di calce LC2_Corti

fb_	fhk	fvk0	fhmedio	τ0	fv0	μ	ϕ	fvk,lim	E	G	FC
120000			172500	9000	20000	0.577	0.767	6500	320000000	128000000	1.2

Verifiche a pressoflessione delle travi in muratura in combinazioni non sismiche

Sezione	γM	N	M	Mu	Comb.	c.s.	Verifica

Sezione	γM	N	M	Mu	Comb.	c.s.	Verifica
ini.	3	-1263	272.27	1150.68	SLU 75	4.23	Si
fin.	3	-100	-98.32	1150.68	SLU 75	11.7	Si
ini.	3	-1343	292.12	1150.68	SLU 82	3.94	Si
fin.	3	-59	-120.5	1150.68	SLU 82	9.55	Si
ini.	3	-1466	294.3	1150.68	SLU 83	3.91	Si
fin.	3	-199	-112.51	1150.68	SLU 83	10.23	Si
ini.	3	-1386	274.45	1150.68	SLU 77	4.19	Si
fin.	3	-240	-90.33	1150.68	SLU 77	12.74	Si
ini.	3	-1376	268.98	1150.68	SLU 79	4.28	Si
fin.	3	-269	-83.26	1150.68	SLU 79	13.82	Si
ini.	3	-1413	282.1	1150.68	SLU 74	4.08	Si
fin.	3	-197	-104.89	1150.68	SLU 74	10.97	Si
ini.	3	-1370	268.73	1150.68	SLU 60	4.28	Si
fin.	3	-189	-103.5	1150.68	SLU 60	11.12	Si
ini.	3	-1316	284.47	1150.68	SLU 84	4.04	Si
fin.	3	-102	-105.94	1150.68	SLU 84	10.86	Si
ini.	3	-1181	267.89	1150.68	SLU 73	4.3	Si
fin.	3	-21	-101.43	1150.68	SLU 73	11.34	Si
ini.	3	-1493	301.95	1150.68	SLU 81	3.81	Si
fin.	3	-157	-127.07	1150.68	SLU 81	9.06	Si

Verifiche a taglio delle travi in muratura secondo §C8.7.1.3.1 in combinazioni non sismiche

Sezione	γM	N	M	V	Vt	Vp	Vt fess. diag.	Vt,lim	Comb.	c.s.	Verifica
ini.	3	-1466	294.3	-2361			1401	545	SLU 83	0.23	No
fin.	3	-199	-112.51	-17			945	366	SLU 83	21.6	Si
ini.	3	-1493	301.95	-2399			1411	548	SLU 81	0.23	No
fin.	3	-157	-127.07	-82			930	358	SLU 81	4.38	Si
ini.	3	-1386	274.45	-2311			1372	535	SLU 77	0.23	No
fin.	3	-240	-90.33	105			960	373	SLU 77	3.54	Si
ini.	3	-1316	284.47	-2339			1347	527	SLU 84	0.23	No
fin.	3	-102	-105.94	28			910	348	SLU 84	12.51	Si
ini.	3	-1181	267.89	-2277			1298	510	SLU 73	0.22	No
fin.	3	-21	-101.43	52			881	333	SLU 73	6.38	Si
ini.	3	-1413	282.1	-2350			1382	538	SLU 74	0.23	No
fin.	3	-197	-104.89	41			945	365	SLU 74	8.99	Si
ini.	3	-1263	272.27	-2328			1328	520	SLU 75	0.22	No
fin.	3	-100	-98.32	85			909	348	SLU 75	4.07	Si
ini.	3	-1236	264.62	-2289			1318	517	SLU 78	0.23	No
fin.	3	-143	-83.76	150			925	356	SLU 78	2.37	Si
ini.	3	-1153	260.24	-2238			1289	506	SLU 76	0.23	No
fin.	3	-63	-86.87	117			896	341	SLU 76	2.92	Si
ini.	3	-1343	292.12	-2377			1357	530	SLU 82	0.22	No
fin.	3	-59	-120.5	-37			895	340	SLU 82	9.2	Si

Verifiche a pressoflessione delle travi in muratura in combinazioni sismiche

Sezione	γM	N	M	Mu	Comb.	c.s.	Verifica
ini.	2	2924	-339.98	1726.01	SLV 14	5.08	Si
fin.	2	-2536	1008.67	1726.01	SLV 14	1.71	Si
ini.	2	2178	-286.76	1726.01	SLV 15	6.02	Si
fin.	2	-2336	803.75	1726.01	SLV 15	2.15	Si
ini.	2	-3313	431.58	1726.01	SLV 7	4	Si
fin.	2	834	-697.49	1726.01	SLV 7	2.47	Si
ini.	2	-4185	669.62	1726.01	SLV 1	2.58	Si
fin.	2	1980	-933.14	1726.01	SLV 1	1.85	Si
ini.	2	2924	-339.98	1726.01	SLV 13	5.08	Si
fin.	2	-2536	1008.67	1726.01	SLV 13	1.71	Si
ini.	2	-4931	722.85	1726.01	SLV 4	2.39	Si
fin.	2	2181	-1138.06	1726.01	SLV 4	1.52	Si
ini.	2	-4185	669.62	1726.01	SLV 2	2.58	Si
fin.	2	1980	-933.14	1726.01	SLV 2	1.85	Si
ini.	2	-3313	431.58	1726.01	SLV 8	4	Si
fin.	2	834	-697.49	1726.01	SLV 8	2.47	Si
ini.	2	-4931	722.85	1726.01	SLV 3	2.39	Si
fin.	2	2181	-1138.06	1726.01	SLV 3	1.52	Si
ini.	2	2178	-286.76	1726.01	SLV 16	6.02	Si
fin.	2	-2336	803.75	1726.01	SLV 16	2.15	Si

Verifiche a taglio delle travi in muratura secondo §C8.7.1.3.1 in combinazioni sismiche

Sezione	γM	N	M	V	Vt	Vp	Vt fess. diag.	Vt,lim	Comb.	c.s.	Verifica
ini.	2	2178	-286.76	1992			1310	0	SLV 16	0	No
fin.	2	-2336	803.75	3625			2151	833	SLV 16	0.23	No
ini.	2	-4185	669.62	-5278			2817	1025	SLV 2	0.19	No
fin.	2	1980	-933.14	-3490			1310	0	SLV 2	0	No
ini.	2	1306	-48.72	121			1310	0	SLV 9	0	No
fin.	2	-1189	568.11	1865			1738	687	SLV 9	0.37	No
ini.	2	-4185	669.62	-5278			2817	1025	SLV 1	0.19	No
fin.	2	1980	-933.14	-3490			1310	0	SLV 1	0	No
ini.	2	1306	-48.72	121			1310	0	SLV 10	0	No
fin.	2	-1189	568.11	1865			1738	687	SLV 10	0.37	No
ini.	2	-4931	722.85	-5649			3085	1093	SLV 4	0.19	No
fin.	2	2181	-1138.06	-3892			1310	0	SLV 4	0	No
ini.	2	2924	-339.98	2363			1310	0	SLV 13	0	No
fin.	2	-2536	1008.67	4027			2223	856	SLV 13	0.21	No
ini.	2	-4931	722.85	-5649			3085	1093	SLV 3	0.19	No
fin.	2	2181	-1138.06	-3892			1310	0	SLV 3	0	No
ini.	2	2178	-286.76	1992			1310	0	SLV 15	0	No
fin.	2	-2336	803.75	3625			2151	833	SLV 15	0.23	No
ini.	2	2924	-339.98	2363			1310	0	SLV 14	0	No
fin.	2	-2536	1008.67	4027			2223	856	SLV 14	0.21	No

Tabella dei coefficienti di sicurezza minimi

Stato limite	Coeff.s.	Comb.	Verifica
PF_SLV	1.517	SLV 3	Si
V_SLV	0	SLV 1	No
PF_SLU	3.811	SLU 81	Si
V_SLU	0.223	SLU 82	No

Trave di accoppiamento 110

Verifiche condotte secondo D.M. 17-01-18 (N.T.C.)

Dati geometrici

X ini.	Y ini.	Z ini.inf.	Z ini.sup.	H ini.	X fin.	Y fin.	Z fin.inf.	Z fin.sup	H fin.	Luce	Spessore	R. Trazione
-21.517	-3.183	11.35	12.05	0.7	-22.517	-3.183	11.35	12.05	0.7	1	0.28	30000

Caratteristiche del materiale

(Circolare 7 21-01-19 C8.5.I) Muratura in mattoni pieni e malta di calce LC2_Corti

fb_	fhk	fvk0	fhmedio	τ0	fv0	μ	ϕ	fvk,lim	E	G	FC
120000			172500	9000	20000	0.577	0.767	6500	320000000	128000000	1.2

Verifiche a pressoflessione delle travi in muratura in combinazioni non sismiche

Sezione	γM	N	M	Mu	Comb.	c.s.	Verifica
ini.	3	-57	21.1	696.09	SLU 82	32.98	Si
fin.	3	-767	-232.06	696.09	SLU 82	3	Si
ini.	3	-102	10.8	696.09	SLU 74	64.47	Si
fin.	3	-735	-221.64	696.09	SLU 74	3.14	Si
ini.	3	-99	19.99	696.09	SLU 81	34.83	Si
fin.	3	-845	-241.48	696.09	SLU 81	2.88	Si
ini.	3	-139	4.28	696.09	SLU 77	162.46	Si
fin.	3	-694	-211.62	696.09	SLU 77	3.29	Si
ini.	3	-135	13.47	696.09	SLU 83	51.67	Si
fin.	3	-805	-231.46	696.09	SLU 83	3.01	Si
ini.	3	-77	22.41	696.09	SLU 39	31.06	Si
fin.	3	-765	-214.42	696.09	SLU 39	3.25	Si
ini.	3	-92	13.28	696.09	SLU 60	52.41	Si
fin.	3	-724	-210.37	696.09	SLU 60	3.31	Si
ini.	3	-93	14.59	696.09	SLU 84	47.71	Si
fin.	3	-727	-222.04	696.09	SLU 84	3.13	Si
ini.	3	-60	11.92	696.09	SLU 75	58.42	Si
fin.	3	-657	-212.22	696.09	SLU 75	3.28	Si
ini.	3	-31	17.01	696.09	SLU 73	40.93	Si
fin.	3	-645	-208.51	696.09	SLU 73	3.34	Si

Verifiche a taglio delle travi in muratura secondo §C8.7.1.3.1 in combinazioni non sismiche

Sezione	γM	N	M	V	Vt	Vp	Vt fess. diag.	Vt,lim	Comb.	c.s.	Verifica
ini.	3	-57	21.1	1391			544	207	SLU 82	0.15	No
fin.	3	-767	-232.06	-1931			743	293	SLU 82	0.15	No
ini.	3	-93	14.59	1439			554	213	SLU 84	0.15	No
fin.	3	-727	-222.04	-1887			732	289	SLU 84	0.15	No
ini.	3	-102	10.8	1405			557	214	SLU 74	0.15	No
fin.	3	-735	-221.64	-1854			734	290	SLU 74	0.16	No
ini.	3	-31	17.01	1353			537	204	SLU 73	0.15	No
fin.	3	-645	-208.51	-1795			709	280	SLU 73	0.16	No
ini.	3	-60	11.92	1422			545	208	SLU 75	0.15	No
fin.	3	-657	-212.22	-1827			712	282	SLU 75	0.15	No
ini.	3	-135	13.47	1422			566	218	SLU 83	0.15	No
fin.	3	-805	-231.46	-1915			754	297	SLU 83	0.16	No
ini.	3	-97	5.4	1470			555	213	SLU 78	0.14	No
fin.	3	-616	-202.2	-1782			701	277	SLU 78	0.16	No
ini.	3	-133	3.24	1439			566	218	SLU 80	0.15	No
fin.	3	-615	-194.75	-1724			701	277	SLU 80	0.16	No
ini.	3	-68	10.49	1402			547	209	SLU 76	0.15	No
fin.	3	-604	-198.49	-1750			698	276	SLU 76	0.16	No
ini.	3	-139	4.28	1453			567	219	SLU 77	0.15	No
fin.	3	-694	-211.62	-1810			723	286	SLU 77	0.16	No

Verifiche a pressoflessione delle travi in muratura in combinazioni sismiche

Sezione	γM	N	M	Mu	Comb.	c.s.	Verifica
ini.	2	883	258.97	1044.13	SLV 8	4.03	Si
fin.	2	-1803	-485.86	1044.13	SLV 8	2.15	Si
ini.	2	1928	374.46	1044.13	SLV 4	2.79	Si
fin.	2	-2279	-733.37	1044.13	SLV 4	1.42	Si
ini.	2	-1850	-270.53	1044.13	SLV 15	3.86	Si
fin.	2	787	333.24	1044.13	SLV 15	3.13	Si
ini.	2	1690	279.95	1044.13	SLV 2	3.73	Si
fin.	2	-1766	-625.54	1044.13	SLV 2	1.67	Si
ini.	2	-1850	-270.53	1044.13	SLV 16	3.86	Si
fin.	2	787	333.24	1044.13	SLV 16	3.13	Si
ini.	2	1690	279.95	1044.13	SLV 1	3.73	Si
fin.	2	-1766	-625.54	1044.13	SLV 1	1.67	Si
ini.	2	883	258.97	1044.13	SLV 7	4.03	Si
fin.	2	-1803	-485.86	1044.13	SLV 7	2.15	Si
ini.	2	-2087	-365.03	1044.13	SLV 14	2.86	Si
fin.	2	1299	441.07	1044.13	SLV 14	2.37	Si
ini.	2	-2087	-365.03	1044.13	SLV 13	2.86	Si
fin.	2	1299	441.07	1044.13	SLV 13	2.37	Si
ini.	2	1928	374.46	1044.13	SLV 3	2.79	Si

Sezione	γM	N	M	Mu	Comb.	c.s.	Verifica
fin.	2	-2279	-733.37	1044.13	SLV 3	1.42	Si

Verifiche a taglio delle travi in muratura secondo §C8.7.1.3.1 in combinazioni sismiche

Sezione	γM	N	M	V	Vt	Vp	Vt fess. diag.	Vt,lim	Comb.	c.s.	Verifica
ini.	2	1690	279.95	-1306			793	0	SLV 2	0	No
fin.	2	-1766	-625.54	-3260			1287	499	SLV 2	0.15	No
ini.	2	1928	374.46	-1773			793	0	SLV 3	0	No
fin.	2	-2279	-733.37	-3794			1431	544	SLV 3	0.14	No
ini.	2	1928	374.46	-1773			793	0	SLV 4	0	No
fin.	2	-2279	-733.37	-3794			1431	544	SLV 4	0.14	No
ini.	2	883	258.97	-583			793	94	SLV 7	0.16	No
fin.	2	-1803	-485.86	-2812			1298	503	SLV 7	0.18	No
ini.	2	-2087	-365.03	3650			1377	528	SLV 14	0.14	No
fin.	2	1299	441.07	1326			793	0	SLV 14	0	No
ini.	2	-1850	-270.53	3183			1310	507	SLV 15	0.16	No
fin.	2	787	333.24	792			793	133	SLV 15	0.17	No
ini.	2	883	258.97	-583			793	94	SLV 8	0.16	No
fin.	2	-1803	-485.86	-2812			1298	503	SLV 8	0.18	No
ini.	2	1690	279.95	-1306			793	0	SLV 1	0	No
fin.	2	-1766	-625.54	-3260			1287	499	SLV 1	0.15	No
ini.	2	-2087	-365.03	3650			1377	528	SLV 13	0.14	No
fin.	2	1299	441.07	1326			793	0	SLV 13	0	No
ini.	2	-1850	-270.53	3183			1310	507	SLV 16	0.16	No
fin.	2	787	333.24	792			793	133	SLV 16	0.17	No

Tabella dei coefficienti di sicurezza minimi

Stato limite	Coeff.s.	Comb.	Verifica
PF_SLV	1.424	SLV 3	Si
V_SLV	0	SLV 1	No
PF_SLU	2.883	SLU 81	Si
V_SLU	0.145	SLU 78	No

Trave di accoppiamento 111

Verifiche condotte secondo D.M. 17-01-18 (N.T.C.)

Dati geometrici

X ini.	Y ini.	Z ini.inf.	Z ini.sup.	H ini.	X fin.	Y fin.	Z fin.inf.	Z fin.sup	H fin.	Luce	Spessore	R. Trazione
-18.787	-3.183	8.55	10.55	2	-19.287	-3.183	8.55	10.55	2	0.5	0.28	30000

Caratteristiche del materiale

(Circolare 7 21-01-19 C8.5.I) Muratura in mattoni pieni e malta di calce LC2_Corti

fb_	fhk	fvk0	fhmedio	τ0	fv0	μ	ϕ	fvk,lim	E	G	FC
120000			172500	9000	20000	0.577	0.767	6500	320000000	128000000	1.2

Verifiche a pressoflessione delle travi in muratura in combinazioni non sismiche

Sezione	γM	N	M	Mu	Comb.	c.s.	Verifica
ini.	3	-1532	-49.5	5682.35	SLU 77	114.8	Si
fin.	3	-1760	438.64	5682.35	SLU 77	12.95	Si
ini.	3	-1517	-42.18	5682.35	SLU 74	134.73	Si
fin.	3	-1740	436.79	5682.35	SLU 74	13.01	Si
ini.	3	-1505	-26.14	5682.35	SLU 81	217.4	Si
fin.	3	-1745	447.06	5682.35	SLU 81	12.71	Si
ini.	3	-1521	-55.05	5682.35	SLU 79	103.22	Si
fin.	3	-1746	424.3	5682.35	SLU 79	13.39	Si
ini.	3	-1540	-91.03	5682.35	SLU 75	62.42	Si
fin.	3	-1649	415.8	5682.35	SLU 75	13.67	Si
ini.	3	-1555	-98.36	5682.35	SLU 78	57.77	Si
fin.	3	-1669	417.65	5682.35	SLU 78	13.61	Si
ini.	3	-1528	-75	5682.35	SLU 82	75.77	Si
fin.	3	-1654	426.07	5682.35	SLU 82	13.34	Si
ini.	3	-1544	-103.91	5682.35	SLU 80	54.69	Si
fin.	3	-1655	403.31	5682.35	SLU 80	14.09	Si
ini.	3	-1520	-33.46	5682.35	SLU 83	169.83	Si
fin.	3	-1765	448.9	5682.35	SLU 83	12.66	Si
ini.	3	-1543	-82.32	5682.35	SLU 84	69.03	Si
fin.	3	-1674	427.91	5682.35	SLU 84	13.28	Si

Verifiche a taglio delle travi in muratura secondo §C8.7.1.3.1 in combinazioni non sismiche

Sezione	γM	N	M	V	Vt	Vp	Vt fess. diag.	Vt,lim	Comb.	c.s.	Verifica
ini.	3	-1532	-49.5	105			2770	1095	SLU 77	10.46	Si
fin.	3	-1760	438.64	2718			2861	1131	SLU 77	0.42	No
ini.	3	-1543	-82.32	-22			2774	1097	SLU 84	49.37	Si
fin.	3	-1674	427.91	2572			2826	1118	SLU 84	0.43	No
ini.	3	-1520	-33.46	147			2765	1093	SLU 83	7.43	Si
fin.	3	-1765	448.9	2724			2863	1132	SLU 83	0.42	No
ini.	3	-1540	-91.03	-85			2773	1096	SLU 75	12.85	Si
fin.	3	-1649	415.8	2530			2816	1114	SLU 75	0.44	No
ini.	3	-1517	-42.18	84			2764	1093	SLU 74	13.01	Si
fin.	3	-1740	436.79	2682			2853	1128	SLU 74	0.42	No
ini.	3	-1505	-26.14	126			2759	1091	SLU 81	8.63	Si
fin.	3	-1745	447.06	2688			2855	1129	SLU 81	0.42	No
ini.	3	-1521	-55.05	125			2765	1093	SLU 79	8.78	Si
fin.	3	-1746	424.3	2653			2855	1129	SLU 79	0.43	No
ini.	3	-1555	-98.36	-65			2779	1099	SLU 78	17	Si
fin.	3	-1669	417.65	2566			2824	1117	SLU 78	0.44	No

Sezione	γM	N	M	V	Vt	Vp	Vt fess. diag.	Vt,lim	Comb.	c.s.	Verifica
ini.	3	-1544	-103.91	-45			2774	1097	SLU 80	24.52	Si
fin.	3	-1655	403.31	2500			2818	1115	SLU 80	0.45	No
ini.	3	-1528	-75	-43			2768	1094	SLU 82	25.51	Si
fin.	3	-1654	426.07	2536			2818	1115	SLU 82	0.44	No

Verifiche a pressoflessione delle travi in muratura in combinazioni sismiche

Sezione	γM	N	M	Mu	Comb.	c.s.	Verifica
ini.	2	-250	426.01	8523.53	SLV 1	20.01	Si
fin.	2	330	-1062.07	8523.53	SLV 1	8.03	Si
ini.	2	-1976	-524.95	8523.53	SLV 16	16.24	Si
fin.	2	-2813	1625.39	8523.53	SLV 16	5.24	Si
ini.	2	790	823.23	8523.53	SLV 3	10.35	Si
fin.	2	682	-930.42	8523.53	SLV 3	9.16	Si
ini.	2	-250	426.01	8523.53	SLV 2	20.01	Si
fin.	2	330	-1062.07	8523.53	SLV 2	8.03	Si
ini.	2	-3261	-913.72	8523.53	SLV 9	9.33	Si
fin.	2	-2352	445.61	8523.53	SLV 9	19.13	Si
ini.	2	-1976	-524.95	8523.53	SLV 15	16.24	Si
fin.	2	-2813	1625.39	8523.53	SLV 15	5.24	Si
ini.	2	-3016	-922.16	8523.53	SLV 14	9.24	Si
fin.	2	-3164	1493.74	8523.53	SLV 14	5.71	Si
ini.	2	790	823.23	8523.53	SLV 4	10.35	Si
fin.	2	682	-930.42	8523.53	SLV 4	9.16	Si
ini.	2	-3016	-922.16	8523.53	SLV 13	9.24	Si
fin.	2	-3164	1493.74	8523.53	SLV 13	5.71	Si
ini.	2	-3261	-913.72	8523.53	SLV 10	9.33	Si
fin.	2	-2352	445.61	8523.53	SLV 10	19.13	Si

Verifiche a taglio delle travi in muratura secondo §C8.7.1.3.1 in combinazioni sismiche

Sezione	γM	N	M	V	Vt	Vp	Vt fess. diag.	Vt,lim	Comb.	c.s.	Verifica
ini.	2	-1976	-524.95	6666			4025	1590	SLV 16	0.24	No
fin.	2	-2813	1625.39	6867			4360	1724	SLV 16	0.25	No
ini.	2	-3016	-922.16	5701			4441	1755	SLV 13	0.31	No
fin.	2	-3164	1493.74	6405			4501	1777	SLV 13	0.28	No
ini.	2	-250	426.01	-6672			3335	1271	SLV 2	0.19	No
fin.	2	330	-1062.07	-3240			3235	1143	SLV 2	0.35	No
ini.	2	-1976	-524.95	6666			4025	1590	SLV 15	0.24	No
fin.	2	-2813	1625.39	6867			4360	1724	SLV 15	0.25	No
ini.	2	206	410.34	3461			3235	1172	SLV 11	0.34	No
fin.	2	-1179	884.45	4029			3707	1451	SLV 11	0.36	No
ini.	2	790	823.23	-5708			3235	1031	SLV 4	0.18	No
fin.	2	682	-930.42	-2778			3235	1059	SLV 4	0.38	No
ini.	2	790	823.23	-5708			3235	1031	SLV 3	0.18	No
fin.	2	682	-930.42	-2778			3235	1059	SLV 3	0.38	No
ini.	2	-250	426.01	-6672			3335	1271	SLV 1	0.19	No
fin.	2	330	-1062.07	-3240			3235	1143	SLV 1	0.35	No
ini.	2	-3016	-922.16	5701			4441	1755	SLV 14	0.31	No
fin.	2	-3164	1493.74	6405			4501	1777	SLV 14	0.28	No
ini.	2	206	410.34	3461			3235	1172	SLV 12	0.34	No
fin.	2	-1179	884.45	4029			3707	1451	SLV 12	0.36	No

Tabella dei coefficienti di sicurezza minimi

Stato limite	Coeff.s.	Comb.	Verifica
PF_SLV	5.244	SLV 15	Si
V_SLV	0.181	SLV 3	No
PF_SLU	12.658	SLU 83	Si
V_SLU	0.416	SLU 83	No

Trave di accoppiamento 112

Verifiche condotte secondo D.M. 17-01-18 (N.T.C.)

Dati geometrici

X ini.	Y ini.	Z ini.inf.	Z ini.sup.	H ini.	X fin.	Y fin.	Z fin.inf.	Z fin.sup	H fin.	Luce	Spessore	R. Trazione
-18.787	-3.183	11.35	12.05	0.7	-19.287	-3.183	11.35	12.05	0.7	0.5	0.28	30000

Caratteristiche del materiale

(Circolare 7 21-01-19 C8.5.I) Muratura in mattoni pieni e malta di calce LC2_Corti

fb_	fhk	fvk0	fhmedio	τ0	fv0	μ	ϕ	fvk,lim	E	G	FC
120000			172500	9000	20000	0.577	0.767	6500	320000000	128000000	1.2

Verifiche a pressoflessione delle travi in muratura in combinazioni non sismiche

Sezione	γM	N	M	Mu	Comb.	c.s.	Verifica
ini.	3	380	16.19	696.09	SLU 78	42.99	Si
fin.	3	425	91.1	696.09	SLU 78	7.64	Si
ini.	3	296	6.27	696.09	SLU 83	111.04	Si
fin.	3	358	90.52	696.09	SLU 83	7.69	Si
ini.	3	334	8.39	696.09	SLU 74	82.93	Si
fin.	3	396	90.69	696.09	SLU 74	7.68	Si
ini.	3	362	16.04	696.09	SLU 80	43.4	Si
fin.	3	394	88.47	696.09	SLU 80	7.87	Si
ini.	3	350	15.78	696.09	SLU 84	44.12	Si
fin.	3	378	90.55	696.09	SLU 84	7.69	Si
ini.	3	388	17.9	696.09	SLU 75	38.88	Si
fin.	3	417	90.72	696.09	SLU 75	7.67	Si
ini.	3	308	6.53	696.09	SLU 79	106.59	Si

Sezione	γM	N	M	Mu	Comb.	c.s.	Verifica
fin.	3	374	88.44	696.09	SLU 79	7.87	Si
ini.	3	304	7.98	696.09	SLU 81	87.23	Si
fin.	3	350	90.14	696.09	SLU 81	7.72	Si
ini.	3	358	17.49	696.09	SLU 82	39.8	Si
fin.	3	370	90.17	696.09	SLU 82	7.72	Si
ini.	3	326	6.68	696.09	SLU 77	104.16	Si
fin.	3	404	91.07	696.09	SLU 77	7.64	Si

Verifiche a taglio delle travi in muratura secondo §C8.7.1.3.1 in combinazioni non sismiche

Sezione	γM	N	M	V	Vt	Vp	Vt fess. diag.	Vt,lim	Comb.	c.s.	Verifica
ini.	3	326	6.68	1563			755	201	SLU 77	0.13	No
fin.	3	404	91.07	-1050			755	175	SLU 77	0.17	No
ini.	3	406	24.09	1374			755	175	SLU 76	0.13	No
fin.	3	400	88.11	-1076			755	177	SLU 76	0.16	No
ini.	3	388	17.9	1484			755	181	SLU 75	0.12	No
fin.	3	417	90.72	-1095			755	171	SLU 75	0.16	No
ini.	3	380	16.19	1499			755	184	SLU 78	0.12	No
fin.	3	425	91.1	-1081			755	168	SLU 78	0.16	No
ini.	3	334	8.39	1547			755	198	SLU 74	0.13	No
fin.	3	396	90.69	-1064			755	178	SLU 74	0.17	No
ini.	3	350	15.78	1499			755	194	SLU 84	0.13	No
fin.	3	378	90.55	-1097			755	184	SLU 84	0.17	No
ini.	3	427	20.79	1307			755	167	SLU 70	0.13	No
fin.	3	444	85.36	-984			755	161	SLU 70	0.16	No
ini.	3	435	22.51	1292			755	164	SLU 67	0.13	No
fin.	3	436	84.98	-998			755	164	SLU 67	0.16	No
ini.	3	414	25.8	1358			755	172	SLU 73	0.13	No
fin.	3	392	87.73	-1090			755	180	SLU 73	0.16	No
ini.	3	358	17.49	1483			755	191	SLU 82	0.13	No
fin.	3	370	90.17	-1111			755	187	SLU 82	0.17	No

Verifiche a pressoflessione delle travi in muratura in combinazioni sismiche

Sezione	γM	N	M	Mu	Comb.	c.s.	Verifica
ini.	2	2206	122.03	1044.13	SLV 9	8.56	Si
fin.	2	2121	247.58	1044.13	SLV 9	4.22	Si
ini.	2	2867	69.85	1044.13	SLV 13	14.95	Si
fin.	2	3405	547.77	1044.13	SLV 13	1.91	Si
ini.	2	-1561	12.14	1044.13	SLV 1	86.02	Si
fin.	2	-2247	-396.59	1044.13	SLV 1	2.63	Si
ini.	2	2206	122.03	1044.13	SLV 10	8.56	Si
fin.	2	2121	247.58	1044.13	SLV 10	4.22	Si
ini.	2	-2323	-49.9	1044.13	SLV 4	20.93	Si
fin.	2	-2842	-422.59	1044.13	SLV 4	2.47	Si
ini.	2	-1561	12.14	1044.13	SLV 2	86.02	Si
fin.	2	-2247	-396.59	1044.13	SLV 2	2.63	Si
ini.	2	2105	7.81	1044.13	SLV 15	133.62	Si
fin.	2	2810	521.76	1044.13	SLV 15	2	Si
ini.	2	2867	69.85	1044.13	SLV 14	14.95	Si
fin.	2	3405	547.77	1044.13	SLV 14	1.91	Si
ini.	2	2105	7.81	1044.13	SLV 16	133.62	Si
fin.	2	2810	521.76	1044.13	SLV 16	2	Si
ini.	2	-2323	-49.9	1044.13	SLV 3	20.93	Si
fin.	2	-2842	-422.59	1044.13	SLV 3	2.47	Si

Verifiche a taglio delle travi in muratura secondo §C8.7.1.3.1 in combinazioni sismiche

Sezione	γM	N	M	V	Vt	Vp	Vt fess. diag.	Vt,lim	Comb.	c.s.	Verifica
ini.	2	2206	122.03	517			1132	0	SLV 9	0	No
fin.	2	2121	247.58	-1106			1132	0	SLV 9	0	No
ini.	2	2867	69.85	1672			1132	0	SLV 13	0	No
fin.	2	3405	547.77	717			1132	0	SLV 13	0	No
ini.	2	-333	-84.76	2016			1265	493	SLV 11	0.24	No
fin.	2	138	160.9	674			1132	395	SLV 11	0.59	No
ini.	2	2105	7.81	2122			1132	0	SLV 16	0	No
fin.	2	2810	521.76	1251			1132	0	SLV 16	0	No
ini.	2	2206	122.03	517			1132	0	SLV 10	0	No
fin.	2	2121	247.58	-1106			1132	0	SLV 10	0	No
ini.	2	2867	69.85	1672			1132	0	SLV 14	0	No
fin.	2	3405	547.77	717			1132	0	SLV 14	0	No
ini.	2	2105	7.81	2122			1132	0	SLV 15	0	No
fin.	2	2810	521.76	1251			1132	0	SLV 15	0	No
ini.	2	877	104.71	-24			1132	138	SLV 6	5.77	Si
fin.	2	426	-35.73	-2134			1132	320	SLV 6	0.15	No
ini.	2	877	104.71	-24			1132	138	SLV 5	5.77	Si
fin.	2	426	-35.73	-2134			1132	320	SLV 5	0.15	No
ini.	2	-333	-84.76	2016			1265	493	SLV 12	0.24	No
fin.	2	138	160.9	674			1132	395	SLV 12	0.59	No

Tabella dei coefficienti di sicurezza minimi

Stato limite	Coeff.s.	Comb.	Verifica
PF_SLV	1.906	SLV 13	Si
V_SLV	0	SLV 9	No
PF_SLU	7.641	SLU 78	Si
V_SLU	0.122	SLU 75	No

Trave di accoppiamento 113

Verifiche condotte secondo D.M. 17-01-18 (N.T.C.)

Dati geometrici

X ini.	Y ini.	Z ini.inf.	Z ini.sup.	H ini.	X fin.	Y fin.	Z fin.inf.	Z fin.sup	H fin.	Luce	Spessore	R. Trazione
-17.277	-3.183	8.55	9.45	0.9	-18.277	-3.183	8.55	9.45	0.9	1	0.28	30000

Caratteristiche del materiale

(Circolare 7 21-01-19 C8.5.I) Muratura in mattoni pieni e malta di calce LC2_Corti

fb_	fhk	fvk0	fhmedio	τ0	fv0	μ	ϕ	fvk,lim	E	G	FC
120000			172500	9000	20000	0.577	0.767	6500	320000000	128000000	1.2

Verifiche a pressoflessione delle travi in muratura in combinazioni non sismiche

Sezione	γM	N	M	Mu	Comb.	c.s.	Verifica
ini.	3	-165	-408.39	1150.68	SLU 84	2.82	Si
fin.	3	-1485	504.77	1150.68	SLU 84	2.28	Si
ini.	3	-102	-401.14	1150.68	SLU 74	2.87	Si
fin.	3	-1435	501.59	1150.68	SLU 74	2.29	Si
ini.	3	-160	-398.08	1150.68	SLU 73	2.89	Si
fin.	3	-1482	494.64	1150.68	SLU 73	2.33	Si
ini.	3	-133	-406.34	1150.68	SLU 83	2.83	Si
fin.	3	-1441	502.84	1150.68	SLU 83	2.29	Si
ini.	3	-134	-403.19	1150.68	SLU 75	2.85	Si
fin.	3	-1478	503.52	1150.68	SLU 75	2.29	Si
ini.	3	-179	-394.11	1150.68	SLU 76	2.92	Si
fin.	3	-1499	495.08	1150.68	SLU 76	2.32	Si
ini.	3	-146	-412.36	1150.68	SLU 82	2.79	Si
fin.	3	-1467	504.33	1150.68	SLU 82	2.28	Si
ini.	3	-153	-399.22	1150.68	SLU 78	2.88	Si
fin.	3	-1496	503.95	1150.68	SLU 78	2.28	Si
ini.	3	-114	-410.31	1150.68	SLU 81	2.8	Si
fin.	3	-1423	502.4	1150.68	SLU 81	2.29	Si
ini.	3	-121	-397.17	1150.68	SLU 77	2.9	Si
fin.	3	-1452	502.02	1150.68	SLU 77	2.29	Si

Verifiche a taglio delle travi in muratura secondo §C8.7.1.3.1 in combinazioni non sismiche

Sezione	γM	N	M	V	Vt	Vp	Vt fess. diag.	Vt,lim	Comb.	c.s.	Verifica
ini.	3	-121	-397.17	1120			917	352	SLU 77	0.31	No
fin.	3	-1452	502.02	2040			1396	543	SLU 77	0.27	No
ini.	3	-134	-403.19	1168			922	354	SLU 75	0.3	No
fin.	3	-1478	503.52	2026			1406	546	SLU 75	0.27	No
ini.	3	-85	-364.63	1024			904	345	SLU 66	0.34	No
fin.	3	-1400	475.98	1993			1377	537	SLU 66	0.27	No
ini.	3	-136	-362.71	1039			922	354	SLU 70	0.34	No
fin.	3	-1461	478.35	1992			1400	544	SLU 70	0.27	No
ini.	3	-114	-410.31	1189			914	350	SLU 81	0.29	No
fin.	3	-1423	502.4	1985			1386	540	SLU 81	0.27	No
ini.	3	-104	-360.66	1007			911	348	SLU 69	0.35	No
fin.	3	-1418	476.42	1999			1384	539	SLU 69	0.27	No
ini.	3	-102	-401.14	1137			910	348	SLU 74	0.31	No
fin.	3	-1435	501.59	2033			1390	541	SLU 74	0.27	No
ini.	3	-153	-399.22	1152			929	357	SLU 78	0.31	No
fin.	3	-1496	503.95	2033			1412	548	SLU 78	0.27	No
ini.	3	-133	-406.34	1172			921	354	SLU 83	0.3	No
fin.	3	-1441	502.84	1992			1392	542	SLU 83	0.27	No
ini.	3	-117	-366.69	1056			915	351	SLU 67	0.33	No
fin.	3	-1444	477.91	1986			1393	542	SLU 67	0.27	No

Verifiche a pressoflessione delle travi in muratura in combinazioni sismiche

Sezione	γM	N	M	Mu	Comb.	c.s.	Verifica
ini.	2	1211	-1103.98	1726.01	SLV 10	1.56	Si
fin.	2	-3246	1074.14	1726.01	SLV 10	1.61	Si
ini.	2	1211	-1103.98	1726.01	SLV 9	1.56	Si
fin.	2	-3246	1074.14	1726.01	SLV 9	1.61	Si
ini.	2	2668	-1523.64	1726.01	SLV 15	1.13	Si
fin.	2	-2555	1228.75	1726.01	SLV 15	1.4	Si
ini.	2	-3071	1221.8	1726.01	SLV 4	1.41	Si
fin.	2	1424	-765.89	1726.01	SLV 4	2.25	Si
ini.	2	2668	-1523.64	1726.01	SLV 16	1.13	Si
fin.	2	-2555	1228.75	1726.01	SLV 16	1.4	Si
ini.	2	2922	-1773.44	1726.01	SLV 14	0.97	No
fin.	2	-3517	1479.6	1726.01	SLV 14	1.17	Si
ini.	2	-2816	971.99	1726.01	SLV 1	1.78	Si
fin.	2	462	-515.04	1726.01	SLV 1	3.35	Si
ini.	2	-3071	1221.8	1726.01	SLV 3	1.41	Si
fin.	2	1424	-765.89	1726.01	SLV 3	2.25	Si
ini.	2	-2816	971.99	1726.01	SLV 2	1.78	Si
fin.	2	462	-515.04	1726.01	SLV 2	3.35	Si
ini.	2	2922	-1773.44	1726.01	SLV 13	0.97	No
fin.	2	-3517	1479.6	1726.01	SLV 13	1.17	Si

Verifiche a taglio delle travi in muratura secondo §C8.7.1.3.1 in combinazioni sismiche

Sezione	γM	N	M	V	Vt	Vp	Vt fess. diag.	Vt,lim	Comb.	c.s.	Verifica
ini.	2	-1359	552.34	-2298			1799	711	SLV 8	0.31	No
fin.	2	1153	-360.43	-1725			1310	143	SLV 8	0.08	No
ini.	2	-3071	1221.8	-4705			2416	914	SLV 4	0.19	No
fin.	2	1424	-765.89	-3052			1310	0	SLV 4	0	No
ini.	2	-3071	1221.8	-4705			2416	914	SLV 3	0.19	No
fin.	2	1424	-765.89	-3052			1310	0	SLV 3	0	No
ini.	2	2668	-1523.64	5336			1310	0	SLV 15	0	No
fin.	2	-2555	1228.75	4778			2230	858	SLV 15	0.18	No
ini.	2	1211	-1103.98	3878			1310	97	SLV 10	0.03	No

Sezione	γM	N	M	V	Vt	Vp	Vt fess. diag.	Vt,lim	Comb.	c.s.	Verifica
fin.	2	-3246	1074.14	4663			2479	932	SLV 10	0.2	No
ini.	2	2922	-1773.44	6285			1310	0	SLV 14	0	No
fin.	2	-3517	1479.6	5990			2576	960	SLV 14	0.16	No
ini.	2	2922	-1773.44	6285			1310	0	SLV 13	0	No
fin.	2	-3517	1479.6	5990			2576	960	SLV 13	0.16	No
ini.	2	1211	-1103.98	3878			1310	97	SLV 9	0.03	No
fin.	2	-3246	1074.14	4663			2479	932	SLV 9	0.2	No
ini.	2	2668	-1523.64	5336			1310	0	SLV 16	0	No
fin.	2	-2555	1228.75	4778			2230	858	SLV 16	0.18	No
ini.	2	-1359	552.34	-2298			1799	711	SLV 7	0.31	No
fin.	2	1153	-360.43	-1725			1310	143	SLV 7	0.08	No

Tabella dei coefficienti di sicurezza minimi

Stato limite	Coeff.s.	Comb.	Verifica
PF_SLV	0.973	SLV 13	No
V_SLV	0	SLV 3	No
PF_SLU	2.28	SLU 84	Si
V_SLU	0.266	SLU 74	No

Trave di accoppiamento 114

Verifiche condotte secondo D.M. 17-01-18 (N.T.C.)

Dati geometrici

X ini.	Y ini.	Z ini.inf.	Z ini.sup.	H ini.	X fin.	Y fin.	Z fin.inf.	Z fin.sup	H fin.	Luce	Spessore	R. Trazione
-17.277	-3.183	11.35	12.05	0.7	-18.277	-3.183	11.35	12.05	0.7	1	0.28	30000

Caratteristiche del materiale

(Circolare 7 21-01-19 C8.5.I) Muratura in mattoni pieni e malta di calce LC2_Corti

fb_	fhk	fvk0	fhmedio	τ0	fv0	μ	ϕ	fvk,lim	E	G	FC
120000			172500	9000	20000	0.577	0.767	6500	320000000	128000000	1.2

Verifiche a pressoflessione delle travi in muratura in combinazioni non sismiche

Sezione	γM	N	M	Mu	Comb.	c.s.	Verifica
ini.	3	-716	-129.67	696.09	SLU 65	5.37	Si
fin.	3	500	63.56	696.09	SLU 65	10.95	Si
ini.	3	-714	-130.78	696.09	SLU 68	5.32	Si
fin.	3	492	61.52	696.09	SLU 68	11.31	Si
ini.	3	-709	-127.03	696.09	SLU 78	5.48	Si
fin.	3	448	50.3	696.09	SLU 78	13.84	Si
ini.	3	-711	-125.92	696.09	SLU 75	5.53	Si
fin.	3	457	52.34	696.09	SLU 75	13.3	Si
ini.	3	-760	-130.64	696.09	SLU 73	5.33	Si
fin.	3	472	60.18	696.09	SLU 73	11.57	Si
ini.	3	-738	-125.34	696.09	SLU 84	5.55	Si
fin.	3	427	51.14	696.09	SLU 84	13.61	Si
ini.	3	-673	-125.06	696.09	SLU 72	5.57	Si
fin.	3	459	53.93	696.09	SLU 72	12.91	Si
ini.	3	-665	-126.06	696.09	SLU 70	5.52	Si
fin.	3	477	53.68	696.09	SLU 70	12.97	Si
ini.	3	-717	-126.03	696.09	SLU 80	5.52	Si
fin.	3	431	50.55	696.09	SLU 80	13.77	Si
ini.	3	-758	-131.75	696.09	SLU 76	5.28	Si
fin.	3	464	58.14	696.09	SLU 76	11.97	Si

Verifiche a taglio delle travi in muratura secondo §C8.7.1.3.1 in combinazioni non sismiche

Sezione	γM	N	M	V	Vt	Vp	Vt fess. diag.	Vt,lim	Comb.	c.s.	Verifica
ini.	3	-651	-116.79	1495			711	281	SLU 77	0.19	No
fin.	3	411	41.96	-567			528	121	SLU 77	0.21	No
ini.	3	-653	-115.68	1498			711	281	SLU 74	0.19	No
fin.	3	419	44	-563			528	119	SLU 74	0.21	No
ini.	3	-760	-130.64	1521			741	292	SLU 73	0.19	No
fin.	3	472	60.18	-406			528	105	SLU 73	0.26	No
ini.	3	-740	-124.23	1543			736	290	SLU 82	0.19	No
fin.	3	435	53.18	-514			528	115	SLU 82	0.22	No
ini.	3	-758	-131.75	1517			741	292	SLU 76	0.19	No
fin.	3	464	58.14	-410			528	107	SLU 76	0.26	No
ini.	3	-711	-125.92	1533			728	287	SLU 75	0.19	No
fin.	3	457	52.34	-489			528	109	SLU 75	0.22	No
ini.	3	-682	-113.98	1509			719	284	SLU 81	0.19	No
fin.	3	398	44.84	-588			528	124	SLU 81	0.21	No
ini.	3	-738	-125.34	1540			735	290	SLU 84	0.19	No
fin.	3	427	51.14	-518			528	117	SLU 84	0.23	No
ini.	3	-680	-115.1	1506			719	284	SLU 83	0.19	No
fin.	3	389	42.8	-591			528	126	SLU 83	0.21	No
ini.	3	-709	-127.03	1529			727	287	SLU 78	0.19	No
fin.	3	448	50.3	-493			528	111	SLU 78	0.23	No

Verifiche a pressoflessione delle travi in muratura in combinazioni sismiche

Sezione	γM	N	M	Mu	Comb.	c.s.	Verifica
ini.	2	145	173.09	1044.13	SLV 1	6.03	Si
fin.	2	-2403	-465.16	1044.13	SLV 1	2.24	Si
ini.	2	-1080	-343.73	1044.13	SLV 15	3.04	Si
fin.	2	3053	537.97	1044.13	SLV 15	1.94	Si
ini.	2	-1910	-358.15	1044.13	SLV 9	2.92	Si
fin.	2	2255	385.19	1044.13	SLV 9	2.71	Si

Sezione	γM	N	M	Mu	Comb.	c.s.	Verifica
ini.	2	145	173.09	1044.13	SLV 2	6.03	Si
fin.	2	-2403	-465.16	1044.13	SLV 2	2.24	Si
ini.	2	-1773	-451.24	1044.13	SLV 13	2.31	Si
fin.	2	3665	647.13	1044.13	SLV 13	1.61	Si
ini.	2	-1773	-451.24	1044.13	SLV 14	2.31	Si
fin.	2	3665	647.13	1044.13	SLV 14	1.61	Si
ini.	2	-1910	-358.15	1044.13	SLV 10	2.92	Si
fin.	2	2255	385.19	1044.13	SLV 10	2.71	Si
ini.	2	838	280.59	1044.13	SLV 3	3.72	Si
fin.	2	-3015	-574.32	1044.13	SLV 3	1.82	Si
ini.	2	838	280.59	1044.13	SLV 4	3.72	Si
fin.	2	-3015	-574.32	1044.13	SLV 4	1.82	Si
ini.	2	-1080	-343.73	1044.13	SLV 16	3.04	Si
fin.	2	3053	537.97	1044.13	SLV 16	1.94	Si

Verifiche a taglio delle travi in muratura secondo §C8.7.1.3.1 in combinazioni sismiche

Sezione	γM	N	M	V	Vt	Vp	Vt fess. diag.	Vt,lim	Comb.	c.s.	Verifica
ini.	2	975	187.5	-610			793	22	SLV 8	0.04	No
fin.	2	-1606	-312.38	-2286			1242	484	SLV 8	0.21	No
ini.	2	975	187.5	-610			793	22	SLV 7	0.04	No
fin.	2	-1606	-312.38	-2286			1242	484	SLV 7	0.21	No
ini.	2	-1080	-343.73	2762			1095	432	SLV 15	0.16	No
fin.	2	3053	537.97	1997			793	0	SLV 15	0	No
ini.	2	838	280.59	-1302			793	113	SLV 4	0.09	No
fin.	2	-3015	-574.32	-3343			1637	602	SLV 4	0.18	No
ini.	2	-1080	-343.73	2762			1095	432	SLV 16	0.16	No
fin.	2	3053	537.97	1997			793	0	SLV 16	0	No
ini.	2	-1910	-358.15	2696			1327	512	SLV 10	0.19	No
fin.	2	2255	385.19	1636			793	0	SLV 10	0	No
ini.	2	838	280.59	-1302			793	113	SLV 3	0.09	No
fin.	2	-3015	-574.32	-3343			1637	602	SLV 3	0.18	No
ini.	2	-1773	-451.24	3388			1289	500	SLV 14	0.15	No
fin.	2	3665	647.13	2693			793	0	SLV 14	0	No
ini.	2	-1773	-451.24	3388			1289	500	SLV 13	0.15	No
fin.	2	3665	647.13	2693			793	0	SLV 13	0	No
ini.	2	-1910	-358.15	2696			1327	512	SLV 9	0.19	No
fin.	2	2255	385.19	1636			793	0	SLV 9	0	No

Tabella dei coefficienti di sicurezza minimi

Stato limite	Coeff.s.	Comb.	Verifica
PF_SLV	1.613	SLV 13	Si
V_SLV	0	SLV 9	No
PF_SLU	5.283	SLU 76	Si
V_SLU	0.188	SLU 75	No

Trave di accoppiamento 115

Verifiche condotte secondo D.M. 17-01-18 (N.T.C.)

Dati geometrici

X ini.	Y ini.	Z ini.inf.	Z ini.sup.	H ini.	X fin.	Y fin.	Z fin.inf.	Z fin.sup	H fin.	Luce	Spessore	R. Trazione
-16.968	-4.413	11.66	12.05	0.39	-16.968	-3.323	11.66	12.05	0.39	1.09	0.28	30000

Caratteristiche del materiale

(Circolare 7 21-01-19 C8.5.I) Muratura in mattoni pieni e malta di calce LC2_Corti

fb_	fhk	fvk0	fhmedio	τ0	fv0	μ	ϕ	fvk,lim	E	G	FC
120000			172500	9000	20000	0.577	0.767	6500	320000000	128000000	1.2

Verifiche a pressoflessione delle travi in muratura in combinazioni non sismiche

Sezione	γM	N	M	Mu	Comb.	c.s.	Verifica
ini.	3	84	-332.51	216.07	SLU 65	0.65	No
fin.	3	84	2.98	216.07	SLU 65	72.6	Si
ini.	3	84	-320.78	216.07	SLU 44	0.67	No
fin.	3	84	3.5	216.07	SLU 44	61.79	Si
ini.	3	84	-336.21	216.07	SLU 31	0.64	No
fin.	3	84	0.12	216.07	SLU 31	1755.97	Si
ini.	3	83	-340.37	216.07	SLU 76	0.63	No
fin.	3	83	2.47	216.07	SLU 76	87.52	Si
ini.	3	84	-348.82	216.07	SLU 73	0.62	No
fin.	3	84	2.43	216.07	SLU 73	89.04	Si
ini.	3	84	-337.08	216.07	SLU 52	0.64	No
fin.	3	84	2.95	216.07	SLU 52	73.32	Si
ini.	3	83	-327.76	216.07	SLU 34	0.66	No
fin.	3	83	0.17	216.07	SLU 34	1307.01	Si
ini.	3	84	-324.47	216.07	SLU 10	0.67	No
fin.	3	84	0.64	216.07	SLU 10	335.77	Si
ini.	3	83	-328.64	216.07	SLU 55	0.66	No
fin.	3	83	2.99	216.07	SLU 55	72.28	Si
ini.	3	83	-324.07	216.07	SLU 68	0.67	No
fin.	3	83	3.02	216.07	SLU 68	71.58	Si

Verifiche a taglio delle travi in muratura secondo §C8.7.1.3.1 in combinazioni non sismiche

Sezione	γM	N	M	V	Vt	Vp	Vt fess. diag.	Vt,lim	Comb.	c.s.	Verifica
ini.	3	84	-332.51	419			280	93	SLU 65	0.22	No
fin.	3	84	2.98	196			280	93	SLU 65	0.47	No
ini.	3	84	-337.08	423			280	93	SLU 52	0.22	No

Sezione	γM	N	M	V	Vt	Vp	Vt fess. diag.	Vt,lim	Comb.	c.s.	Verifica
fin.	3	84	2.95	201			280	93	SLU 52	0.46	No
ini.	3	83	-327.76	386			280	93	SLU 34	0.24	No
fin.	3	83	0.17	215			280	93	SLU 34	0.43	No
ini.	3	83	-312.33	401			280	93	SLU 47	0.23	No
fin.	3	83	3.54	178			280	93	SLU 47	0.52	No
ini.	3	83	-340.37	426			280	93	SLU 76	0.22	No
fin.	3	83	2.47	203			280	93	SLU 76	0.46	No
ini.	3	84	-320.78	409			280	93	SLU 44	0.23	No
fin.	3	84	3.5	186			280	93	SLU 44	0.5	No
ini.	3	83	-324.07	411			280	93	SLU 68	0.23	No
fin.	3	83	3.02	189			280	93	SLU 68	0.49	No
ini.	3	84	-336.21	394			280	93	SLU 31	0.23	No
fin.	3	84	0.12	223			280	93	SLU 31	0.42	No
ini.	3	84	-348.82	434			280	93	SLU 73	0.21	No
fin.	3	84	2.43	211			280	93	SLU 73	0.44	No
ini.	3	83	-328.64	416			280	93	SLU 55	0.22	No
fin.	3	83	2.99	193			280	93	SLU 55	0.48	No

Verifiche a pressoflessione delle travi in muratura in combinazioni sismiche

Sezione	γM	N	M	Mu	Comb.	c.s.	Verifica
ini.	2	583	-1782.21	324.11	SLV 8	0.18	No
fin.	2	906	-18.42	324.11	SLV 8	17.59	Si
ini.	2	-585	1655.28	324.11	SLV 10	0.2	No
fin.	2	-909	31.98	324.11	SLV 10	10.13	Si
ini.	2	-698	2027.62	324.11	SLV 5	0.16	No
fin.	2	-730	89.61	324.11	SLV 5	3.62	Si
ini.	2	583	-1782.21	324.11	SLV 7	0.18	No
fin.	2	906	-18.42	324.11	SLV 7	17.59	Si
ini.	2	379	-1255.5	324.11	SLV 16	0.26	No
fin.	2	-53	-105.49	324.11	SLV 16	3.07	Si
ini.	2	695	-2154.54	324.11	SLV 11	0.15	No
fin.	2	728	-76.06	324.11	SLV 11	4.26	Si
ini.	2	379	-1255.5	324.11	SLV 15	0.26	No
fin.	2	-53	-105.49	324.11	SLV 15	3.07	Si
ini.	2	-698	2027.62	324.11	SLV 6	0.16	No
fin.	2	-730	89.61	324.11	SLV 6	3.62	Si
ini.	2	-585	1655.28	324.11	SLV 9	0.2	No
fin.	2	-909	31.98	324.11	SLV 9	10.13	Si
ini.	2	695	-2154.54	324.11	SLV 12	0.15	No
fin.	2	728	-76.06	324.11	SLV 12	4.26	Si

Verifiche a taglio delle travi in muratura secondo §C8.7.1.3.1 in combinazioni sismiche

Sezione	γM	N	M	V	Vt	Vp	Vt fess. diag.	Vt,lim	Comb.	c.s.	Verifica
ini.	2	583	-1782.21	-398			421	0	SLV 8	0	No
fin.	2	906	-18.42	1546			421	0	SLV 8	0	No
ini.	2	695	-2154.54	-269			421	0	SLV 11	0	No
fin.	2	728	-76.06	1884			421	0	SLV 11	0	No
ini.	2	695	-2154.54	-269			421	0	SLV 12	0	No
fin.	2	728	-76.06	1884			421	0	SLV 12	0	No
ini.	2	583	-1782.21	-398			421	0	SLV 7	0	No
fin.	2	906	-18.42	1546			421	0	SLV 7	0	No
ini.	2	-698	2027.62	570			607	239	SLV 5	0.42	No
fin.	2	-730	89.61	-1927			615	242	SLV 5	0.13	No
ini.	2	379	-1255.5	219			421	88	SLV 15	0.4	No
fin.	2	-53	-105.49	1064			435	166	SLV 15	0.16	No
ini.	2	-698	2027.62	570			607	239	SLV 6	0.42	No
fin.	2	-730	89.61	-1927			615	242	SLV 6	0.13	No
ini.	2	379	-1255.5	219			421	88	SLV 16	0.4	No
fin.	2	-53	-105.49	1064			435	166	SLV 16	0.16	No
ini.	2	-381	1128.57	81			522	206	SLV 1	2.55	Si
fin.	2	51	119.04	-1107			421	151	SLV 1	0.14	No
ini.	2	-381	1128.57	81			522	206	SLV 2	2.55	Si
fin.	2	51	119.04	-1107			421	151	SLV 2	0.14	No

Tabella dei coefficienti di sicurezza minimi

Stato limite	Coeff.s.	Comb.	Verifica
PF_SLV	0.15	SLV 11	No
V_SLV	0	SLV 7	No
PF_SLU	0.619	SLU 73	No
V_SLU	0.214	SLU 73	No

Trave di accoppiamento 116

Verifiche condotte secondo D.M. 17-01-18 (N.T.C.)

Dati geometrici

X ini.	Y ini.	Z ini.inf.	Z ini.sup.	H ini.	X fin.	Y fin.	Z fin.inf.	Z fin.sup	H fin.	Luce	Spessore	R. Trazione
-15.287	-3.183	10.65	12.05	1.4	-16.187	-3.183	10.65	12.05	1.4	0.9	0.28	30000

Caratteristiche del materiale

(Circolare 7 21-01-19 C8.5.I) Muratura in mattoni pieni e malta di calce LC2_Corti

fb_	fhk	fvk0	fhmedio	τ0	fv0	μ	ϕ	fvk,lim	E	G	FC
120000			172500	9000	20000	0.577	0.767	6500	320000000	128000000	1.2

Verifiche a pressoflessione delle travi in muratura in combinazioni non sismiche

Sezione	γM	N	M	Mu	Comb.	c.s.	Verifica

Sezione	γM	N	M	Mu	Comb.	c.s.	Verifica
ini.	3	-472	-2144.95	2784.35	SLU 82	1.3	Si
fin.	3	-472	1873.55	2784.35	SLU 82	1.49	Si
ini.	3	-431	-2074.17	2784.35	SLU 75	1.34	Si
fin.	3	-431	1777.69	2784.35	SLU 75	1.57	Si
ini.	3	-450	-2152.93	2784.35	SLU 83	1.29	Si
fin.	3	-450	1890	2784.35	SLU 83	1.47	Si
ini.	3	-463	-2021.1	2784.35	SLU 73	1.38	Si
fin.	3	-463	1730.63	2784.35	SLU 73	1.61	Si
ini.	3	-425	-2029.03	2784.35	SLU 79	1.37	Si
fin.	3	-425	1750.5	2784.35	SLU 79	1.59	Si
ini.	3	-468	-2128.82	2784.35	SLU 84	1.31	Si
fin.	3	-468	1850.92	2784.35	SLU 84	1.5	Si
ini.	3	-409	-2082.15	2784.35	SLU 77	1.34	Si
fin.	3	-409	1794.13	2784.35	SLU 77	1.55	Si
ini.	3	-413	-2098.28	2784.35	SLU 74	1.33	Si
fin.	3	-413	1816.76	2784.35	SLU 74	1.53	Si
ini.	3	-427	-2058.04	2784.35	SLU 78	1.35	Si
fin.	3	-427	1755.05	2784.35	SLU 78	1.59	Si
ini.	3	-454	-2169.06	2784.35	SLU 81	1.28	Si
fin.	3	-454	1912.63	2784.35	SLU 81	1.46	Si

Verifiche a taglio delle travi in muratura secondo §C8.7.1.3.1 in combinazioni non sismiche

Sezione	γM	N	M	V	Vt	Vp	Vt fess. diag.	Vt,lim	Comb.	c.s.	Verifica
ini.	3	-454	-2169.06	5431			1691	659	SLU 81	0.12	No
fin.	3	-454	1912.63	3657			1691	659	SLU 81	0.18	No
ini.	3	-472	-2144.95	5360			1698	663	SLU 82	0.12	No
fin.	3	-472	1873.55	3587			1698	663	SLU 82	0.18	No
ini.	3	-431	-2074.17	5116			1682	655	SLU 75	0.13	No
fin.	3	-431	1777.69	3461			1682	655	SLU 75	0.19	No
ini.	3	-409	-2082.15	5143			1673	651	SLU 77	0.13	No
fin.	3	-409	1794.13	3488			1673	651	SLU 77	0.19	No
ini.	3	-413	-2098.28	5186			1675	652	SLU 74	0.13	No
fin.	3	-413	1816.76	3531			1675	652	SLU 74	0.18	No
ini.	3	-468	-2128.82	5317			1697	662	SLU 84	0.12	No
fin.	3	-468	1850.92	3544			1697	662	SLU 84	0.19	No
ini.	3	-450	-2152.93	5387			1690	659	SLU 83	0.12	No
fin.	3	-450	1890	3614			1690	659	SLU 83	0.18	No
ini.	3	-425	-2029.03	5036			1680	654	SLU 79	0.13	No
fin.	3	-425	1750.5	3380			1680	654	SLU 79	0.19	No
ini.	3	-463	-2021.1	5005			1695	661	SLU 73	0.13	No
fin.	3	-463	1730.63	3349			1695	661	SLU 73	0.2	No
ini.	3	-427	-2058.04	5073			1680	654	SLU 78	0.13	No
fin.	3	-427	1755.05	3418			1680	654	SLU 78	0.19	No

Verifiche a pressoflessione delle travi in muratura in combinazioni sismiche

Sezione	γM	N	M	Mu	Comb.	c.s.	Verifica
ini.	2	-898	-3789.46	4176.53	SLV 10	1.1	Si
fin.	2	-842	3158.72	4176.53	SLV 10	1.32	Si
ini.	2	-1424	-2160.03	4176.53	SLV 6	1.93	Si
fin.	2	-1636	1660.17	4176.53	SLV 6	2.52	Si
ini.	2	-908	1782.5	4176.53	SLV 4	2.34	Si
fin.	2	-1332	-1670.67	4176.53	SLV 4	2.5	Si
ini.	2	-898	-3789.46	4176.53	SLV 9	1.1	Si
fin.	2	-842	3158.72	4176.53	SLV 9	1.32	Si
ini.	2	845	-3648.94	4176.53	SLV 15	1.14	Si
fin.	2	1315	3324.49	4176.53	SLV 15	1.26	Si
ini.	2	323	-4591.18	4176.53	SLV 13	0.91	No
fin.	2	747	4054.89	4176.53	SLV 13	1.03	Si
ini.	2	-1424	-2160.03	4176.53	SLV 5	1.93	Si
fin.	2	-1636	1660.17	4176.53	SLV 5	2.52	Si
ini.	2	845	-3648.94	4176.53	SLV 16	1.14	Si
fin.	2	1315	3324.49	4176.53	SLV 16	1.26	Si
ini.	2	-908	1782.5	4176.53	SLV 3	2.34	Si
fin.	2	-1332	-1670.67	4176.53	SLV 3	2.5	Si
ini.	2	323	-4591.18	4176.53	SLV 14	0.91	No
fin.	2	747	4054.89	4176.53	SLV 14	1.03	Si

Verifiche a taglio delle travi in muratura secondo §C8.7.1.3.1 in combinazioni sismiche

Sezione	γM	N	M	V	Vt	Vp	Vt fess. diag.	Vt,lim	Comb.	c.s.	Verifica
ini.	2	-898	-3789.46	8176			2624	1029	SLV 9	0.13	No
fin.	2	-842	3158.72	7465			2601	1019	SLV 9	0.14	No
ini.	2	323	-4591.18	10229			2264	779	SLV 14	0.08	No
fin.	2	747	4054.89	9385			2264	670	SLV 14	0.07	No
ini.	2	-908	1782.5	-3357			2628	1031	SLV 4	0.31	No
fin.	2	-1332	-1670.67	-4691			2797	1104	SLV 4	0.24	No
ini.	2	-898	-3789.46	8176			2624	1029	SLV 10	0.13	No
fin.	2	-842	3158.72	7465			2601	1019	SLV 10	0.14	No
ini.	2	-1424	-2160.03	4635			2834	1120	SLV 5	0.24	No
fin.	2	-1636	1660.17	3837			2919	1154	SLV 5	0.3	No
ini.	2	-1424	-2160.03	4635			2834	1120	SLV 6	0.24	No
fin.	2	-1636	1660.17	3837			2919	1154	SLV 6	0.3	No
ini.	2	323	-4591.18	10229			2264	779	SLV 13	0.08	No
fin.	2	747	4054.89	9385			2264	670	SLV 13	0.07	No
ini.	2	845	-3648.94	8447			2264	643	SLV 15	0.08	No
fin.	2	1315	3324.49	7402			2264	489	SLV 15	0.07	No
ini.	2	845	-3648.94	8447			2264	643	SLV 16	0.08	No
fin.	2	1315	3324.49	7402			2264	489	SLV 16	0.07	No
ini.	2	-908	1782.5	-3357			2628	1031	SLV 3	0.31	No
fin.	2	-1332	-1670.67	-4691			2797	1104	SLV 3	0.24	No

Tabella dei coefficienti di sicurezza minimi

Stato limite	Coeff.s.	Comb.	Verifica
PF_SLV	0.91	SLV 13	No
V_SLV	0.066	SLV 15	No
PF_SLU	1.284	SLU 81	Si
V_SLU	0.121	SLU 81	No

Trave di accoppiamento 117

Verifiche condotte secondo D.M. 17-01-18 (N.T.C.)

Dati geometrici

X ini.	Y ini.	Z ini.inf.	Z ini.sup.	H ini.	X fin.	Y fin.	Z fin.inf.	Z fin.sup	H fin.	Luce	Spessore	R. Trazione
-16.697	-4.696	11.66	12.05	0.39	-14.857	-4.696	11.66	12.05	0.39	1.84	0.3	30000

Caratteristiche del materiale

(Circolare 7 21-01-19 C8.5.I) Muratura in mattoni pieni e malta di calce LC2_Corti

fb_	fhk	fvk0	fhmedio	τ0	fv0	μ	ϕ	fvk,lim	E	G	FC
120000			172500	9000	20000	0.577	0.767	6500	320000000	128000000	1.2

Verifiche a pressoflessione delle travi in muratura in combinazioni non sismiche

Sezione	γM	N	M	Mu	Comb.	c.s.	Verifica
ini.	3	-334	292.04	231.51	SLU 76	0.79	No
fin.	3	-854	-476.31	231.51	SLU 76	0.49	No
ini.	3	-268	240.47	231.51	SLU 80	0.96	No
fin.	3	-789	-450.11	231.51	SLU 80	0.51	No
ini.	3	-262	221.53	231.51	SLU 75	1.05	Si
fin.	3	-725	-420.21	231.51	SLU 75	0.55	No
ini.	3	-267	210.13	231.51	SLU 82	1.1	Si
fin.	3	-712	-419.12	231.51	SLU 82	0.55	No
ini.	3	-315	281.52	231.51	SLU 55	0.82	No
fin.	3	-780	-430.46	231.51	SLU 55	0.54	No
ini.	3	-271	225.39	231.51	SLU 84	1.03	Si
fin.	3	-762	-443.26	231.51	SLU 84	0.52	No
ini.	3	-313	272	231.51	SLU 34	0.85	No
fin.	3	-785	-432.97	231.51	SLU 34	0.53	No
ini.	3	-330	276.78	231.51	SLU 73	0.84	No
fin.	3	-804	-452.17	231.51	SLU 73	0.51	No
ini.	3	-316	291.64	231.51	SLU 68	0.79	No
fin.	3	-798	-436	231.51	SLU 68	0.53	No
ini.	3	-266	236.79	231.51	SLU 78	0.98	No
fin.	3	-775	-444.34	231.51	SLU 78	0.52	No

Verifiche a taglio delle travi in muratura secondo §C8.7.1.3.1 in combinazioni non sismiche

Sezione	γM	N	M	V	Vt	Vp	Vt fess. diag.	Vt,lim	Comb.	c.s.	Verifica
ini.	3	-271	225.39	72			373	147	SLU 84	2.03	Si
fin.	3	-762	-443.26	-772			504	194	SLU 84	0.25	No
ini.	3	-268	240.47	0			372	147	SLU 80	341.24	Si
fin.	3	-789	-450.11	-769			511	197	SLU 80	0.26	No
ini.	3	-330	276.78	-9			388	154	SLU 73	17.68	Si
fin.	3	-804	-452.17	-760			515	198	SLU 73	0.26	No
ini.	3	-267	210.13	110			372	147	SLU 82	1.33	Si
fin.	3	-712	-419.12	-741			490	190	SLU 82	0.26	No
ini.	3	-334	292.04	-47			389	154	SLU 76	3.29	Si
fin.	3	-854	-476.31	-791			528	202	SLU 76	0.26	No
ini.	3	-161	109.91	237			343	134	SLU 81	0.57	No
fin.	3	-538	-343.63	-661			444	174	SLU 81	0.26	No
ini.	3	-165	125.16	199			344	135	SLU 83	0.68	No
fin.	3	-588	-367.77	-692			457	179	SLU 83	0.26	No
ini.	3	-266	236.79	8			371	147	SLU 78	17.71	Si
fin.	3	-775	-444.34	-763			507	195	SLU 78	0.26	No
ini.	3	-161	140.25	126			343	134	SLU 79	1.06	Si
fin.	3	-615	-374.62	-689			464	181	SLU 79	0.26	No
ini.	3	-262	221.53	46			370	146	SLU 75	3.15	Si
fin.	3	-725	-420.21	-732			494	191	SLU 75	0.26	No

Verifiche a pressoflessione delle travi in muratura in combinazioni sismiche

Sezione	γM	N	M	Mu	Comb.	c.s.	Verifica
ini.	2	-1097	920.54	347.26	SLV 16	0.38	No
fin.	2	-2005	-934.85	347.26	SLV 16	0.37	No
ini.	2	-1642	1454.83	347.26	SLV 11	0.24	No
fin.	2	-2747	-1259	347.26	SLV 11	0.28	No
ini.	2	1082	-1009.63	347.26	SLV 10	0.34	No
fin.	2	1427	550.91	347.26	SLV 10	0.63	No
ini.	2	1082	-1009.63	347.26	SLV 9	0.34	No
fin.	2	1427	550.91	347.26	SLV 9	0.63	No
ini.	2	-1097	920.54	347.26	SLV 15	0.38	No
fin.	2	-2005	-934.85	347.26	SLV 15	0.37	No
ini.	2	-1292	1173.46	347.26	SLV 8	0.3	No
fin.	2	-2130	-993.86	347.26	SLV 8	0.35	No
ini.	2	1432	-1291.01	347.26	SLV 6	0.27	No
fin.	2	2043	816.04	347.26	SLV 6	0.43	No
ini.	2	1432	-1291.01	347.26	SLV 5	0.27	No
fin.	2	2043	816.04	347.26	SLV 5	0.43	No
ini.	2	-1292	1173.46	347.26	SLV 7	0.3	No
fin.	2	-2130	-993.86	347.26	SLV 7	0.35	No
ini.	2	-1642	1454.83	347.26	SLV 12	0.24	No

Sezione	γM	N	M	Mu	Comb.	c.s.	Verifica
fin.	2	-2747	-1259	347.26	SLV 12	0.28	No

Verifiche a taglio delle travi in muratura secondo §C8.7.1.3.1 in combinazioni sismiche

Sezione	γM	N	M	V	Vt	Vp	Vt fess. diag.	Vt,lim	Comb.	c.s.	Verifica
ini.	2	-1642	1454.83	-774			888	331	SLV 11	0.43	No
fin.	2	-2747	-1259	-1469			1183	405	SLV 11	0.28	No
ini.	2	1432	-1291.01	988			451	0	SLV 6	0	No
fin.	2	2043	816.04	619			451	0	SLV 6	0	No
ini.	2	-1292	1173.46	-519			795	304	SLV 8	0.58	No
fin.	2	-2130	-993.86	-1193			1019	365	SLV 8	0.31	No
ini.	2	-1642	1454.83	-774			888	331	SLV 12	0.43	No
fin.	2	-2747	-1259	-1469			1183	405	SLV 12	0.28	No
ini.	2	1432	-1291.01	988			451	0	SLV 5	0	No
fin.	2	2043	816.04	619			451	0	SLV 5	0	No
ini.	2	887	-756.72	758			451	0	SLV 2	0	No
fin.	2	1301	491.9	307			451	0	SLV 2	0	No
ini.	2	1082	-1009.63	733			451	0	SLV 10	0	No
fin.	2	1427	550.91	343			451	0	SLV 10	0	No
ini.	2	887	-756.72	758			451	0	SLV 1	0	No
fin.	2	1301	491.9	307			451	0	SLV 1	0	No
ini.	2	-1292	1173.46	-519			795	304	SLV 7	0.58	No
fin.	2	-2130	-993.86	-1193			1019	365	SLV 7	0.31	No
ini.	2	1082	-1009.63	733			451	0	SLV 9	0	No
fin.	2	1427	550.91	343			451	0	SLV 9	0	No

Tabella dei coefficienti di sicurezza minimi

Stato limite	Coeff.s.	Comb.	Verifica
PF_SLV	0.239	SLV 11	No
V_SLV	0	SLV 1	No
PF_SLU	0.486	SLU 76	No
V_SLU	0.252	SLU 84	No

Trave di accoppiamento 118

Verifiche condotte secondo D.M. 17-01-18 (N.T.C.)

Dati geometrici

X ini.	Y ini.	Z ini.inf.	Z ini.sup.	H ini.	X fin.	Y fin.	Z fin.inf.	Z fin.sup	H fin.	Luce	Spessore	R. Trazione
-15.01	1.423	10.65	12.05	1.4	-15.01	2.223	10.65	12.05	1.4	0.8	0.14	30000

Caratteristiche del materiale

(Circolare 7 21-01-19 C8.5.I) Muratura in mattoni pieni e malta di calce LC2_Corti

fb_	fhk	fvk0	fhmedio	τ0	fv0	μ	ϕ	fvk,lim	E	G	FC
120000			172500	9000	20000	0.577	0.767	6500	320000000	128000000	1.2

Verifiche a pressoflessione delle travi in muratura in combinazioni non sismiche

Sezione	γM	N	M	Mu	Comb.	c.s.	Verifica
ini.	3	-116	117.4	1392.18	SLU 69	11.86	Si
fin.	3	-116	-2322.54	1392.18	SLU 69	0.6	No
ini.	3	-112	117.84	1392.18	SLU 84	11.81	Si
fin.	3	-112	-2467.32	1392.18	SLU 84	0.56	No
ini.	3	-122	122.24	1392.18	SLU 78	11.39	Si
fin.	3	-122	-2544.64	1392.18	SLU 78	0.55	No
ini.	3	-106	115.15	1392.18	SLU 76	12.09	Si
fin.	3	-106	-2365.22	1392.18	SLU 76	0.59	No
ini.	3	-115	118.4	1392.18	SLU 83	11.76	Si
fin.	3	-115	-2473.63	1392.18	SLU 83	0.56	No
ini.	3	-111	117.17	1392.18	SLU 75	11.88	Si
fin.	3	-111	-2373.16	1392.18	SLU 75	0.59	No
ini.	3	-122	121.16	1392.18	SLU 79	11.49	Si
fin.	3	-122	-2547.21	1392.18	SLU 79	0.55	No
ini.	3	-114	117.73	1392.18	SLU 74	11.82	Si
fin.	3	-114	-2379.47	1392.18	SLU 74	0.59	No
ini.	3	-119	120.59	1392.18	SLU 80	11.54	Si
fin.	3	-119	-2540.9	1392.18	SLU 80	0.55	No
ini.	3	-125	122.8	1392.18	SLU 77	11.34	Si
fin.	3	-125	-2550.95	1392.18	SLU 77	0.55	No

Verifiche a taglio delle travi in muratura secondo §C8.7.1.3.1 in combinazioni non sismiche

Sezione	γM	N	M	V	Vt	Vp	Vt fess. diag.	Vt,lim	Comb.	c.s.	Verifica
ini.	3	-106	115.15	-2912			797	306	SLU 76	0.11	No
fin.	3	-106	-2365.22	-3304			797	306	SLU 76	0.09	No
ini.	3	-122	122.24	-3146			804	310	SLU 78	0.1	No
fin.	3	-122	-2544.64	-3537			804	310	SLU 78	0.09	No
ini.	3	-114	117.73	-2934			800	308	SLU 74	0.1	No
fin.	3	-114	-2379.47	-3325			800	308	SLU 74	0.09	No
ini.	3	-111	117.17	-2925			799	307	SLU 75	0.11	No
fin.	3	-111	-2373.16	-3316			799	307	SLU 75	0.09	No
ini.	3	-122	121.16	-3147			804	310	SLU 79	0.1	No
fin.	3	-122	-2547.21	-3539			804	310	SLU 79	0.09	No
ini.	3	-125	122.8	-3154			805	310	SLU 77	0.1	No
fin.	3	-125	-2550.95	-3546			805	310	SLU 77	0.09	No
ini.	3	-112	117.84	-3043			800	307	SLU 84	0.1	No
fin.	3	-112	-2467.32	-3435			800	307	SLU 84	0.09	No
ini.	3	-119	120.59	-3139			803	309	SLU 80	0.1	No
fin.	3	-119	-2540.9	-3530			803	309	SLU 80	0.09	No

Sezione	γM	N	M	V	Vt	Vp	Vt fess. diag.	Vt,lim	Comb.	c.s.	Verifica
ini.	3	-115	118.4	-3052			801	308	SLU 83	0.1	No
fin.	3	-115	-2473.63	-3443			801	308	SLU 83	0.09	No
ini.	3	-116	117.4	-2862			801	308	SLU 69	0.11	No
fin.	3	-116	-2322.54	-3253			801	308	SLU 69	0.09	No

Verifiche a pressoflessione delle travi in muratura in combinazioni sismiche

Sezione	γM	N	M	Mu	Comb.	c.s.	Verifica
ini.	2	-402	414.16	2088.26	SLV 16	5.04	Si
fin.	2	-488	-4302.28	2088.26	SLV 16	0.49	No
ini.	2	-1523	882.47	2088.26	SLV 11	2.37	Si
fin.	2	-1809	-5840.69	2088.26	SLV 11	0.36	No
ini.	2	-1591	821.31	2088.26	SLV 7	2.54	Si
fin.	2	-1877	-4866.56	2088.26	SLV 7	0.43	No
ini.	2	490	-48.42	2088.26	SLV 13	43.13	Si
fin.	2	577	-2009.51	2088.26	SLV 13	1.04	Si
ini.	2	-1591	821.31	2088.26	SLV 8	2.54	Si
fin.	2	-1877	-4866.56	2088.26	SLV 8	0.43	No
ini.	2	490	-48.42	2088.26	SLV 14	43.13	Si
fin.	2	577	-2009.51	2088.26	SLV 14	1.04	Si
ini.	2	1385	-720.62	2088.26	SLV 5	2.9	Si
fin.	2	1671	2776.01	2088.26	SLV 5	0.75	No
ini.	2	1385	-720.62	2088.26	SLV 6	2.9	Si
fin.	2	1671	2776.01	2088.26	SLV 6	0.75	No
ini.	2	-1523	882.47	2088.26	SLV 12	2.37	Si
fin.	2	-1809	-5840.69	2088.26	SLV 12	0.36	No
ini.	2	-402	414.16	2088.26	SLV 15	5.04	Si
fin.	2	-488	-4302.28	2088.26	SLV 15	0.49	No

Verifiche a taglio delle travi in muratura secondo §C8.7.1.3.1 in combinazioni sismiche

Sezione	γM	N	M	V	Vt	Vp	Vt fess. diag.	Vt,lim	Comb.	c.s.	Verifica
ini.	2	-1523	882.47	-7870			1741	681	SLV 11	0.09	No
fin.	2	-1809	-5840.69	-8016			1856	719	SLV 11	0.09	No
ini.	2	1385	-720.62	4122			1132	0	SLV 6	0	No
fin.	2	1671	2776.01	3675			1132	0	SLV 6	0	No
ini.	2	-1523	882.47	-7870			1741	681	SLV 12	0.09	No
fin.	2	-1809	-5840.69	-8016			1856	719	SLV 12	0.09	No
ini.	2	1453	-659.45	2896			1132	0	SLV 9	0	No
fin.	2	1739	1801.87	2483			1132	0	SLV 9	0	No
ini.	2	-1591	821.31	-6644			1768	690	SLV 8	0.1	No
fin.	2	-1877	-4866.56	-6824			1883	728	SLV 8	0.11	No
ini.	2	-402	414.16	-5533			1293	506	SLV 15	0.09	No
fin.	2	-488	-4302.28	-5732			1327	521	SLV 15	0.09	No
ini.	2	-402	414.16	-5533			1293	506	SLV 16	0.09	No
fin.	2	-488	-4302.28	-5732			1327	521	SLV 16	0.09	No
ini.	2	-1591	821.31	-6644			1768	690	SLV 7	0.1	No
fin.	2	-1877	-4866.56	-6824			1883	728	SLV 7	0.11	No
ini.	2	1453	-659.45	2896			1132	0	SLV 10	0	No
fin.	2	1739	1801.87	2483			1132	0	SLV 10	0	No
ini.	2	1385	-720.62	4122			1132	0	SLV 5	0	No
fin.	2	1671	2776.01	3675			1132	0	SLV 5	0	No

Tabella dei coefficienti di sicurezza minimi

Stato limite	Coeff.s.	Comb.	Verifica
PF_SLV	0.358	SLV 11	No
V_SLV	0	SLV 5	No
PF_SLU	0.546	SLU 77	No
V_SLU	0.087	SLU 79	No

Trave di accoppiamento 119

Verifiche condotte secondo D.M. 17-01-18 (N.T.C.)

Dati geometrici

X ini.	Y ini.	Z ini.inf.	Z ini.sup.	H ini.	X fin.	Y fin.	Z fin.inf.	Z fin.sup	H fin.	Luce	Spessore	R. Trazione
-13.727	0	10.65	12.05	1.4	-13.727	1	10.65	12.05	1.4	1	0.28	30000

Caratteristiche del materiale

(Circolare 7 21-01-19 C8.5.I) Muratura in mattoni pieni e malta di calce LC2_Corti

fb_	fhk	fvk0	fhmedio	τ0	fv0	μ	ϕ	fvk,lim	E	G	FC
120000			172500	9000	20000	0.577	0.767	6500	320000000	128000000	1.2

Verifiche a pressoflessione delle travi in muratura in combinazioni non sismiche

Sezione	γM	N	M	Mu	Comb.	c.s.	Verifica
ini.	3	-84	-2449.1	2784.35	SLU 71	1.14	Si
fin.	3	-84	-218.33	2784.35	SLU 71	12.75	Si
ini.	3	-104	-2411.53	2784.35	SLU 83	1.15	Si
fin.	3	-104	-212.62	2784.35	SLU 83	13.1	Si
ini.	3	-89	-2373.05	2784.35	SLU 35	1.17	Si
fin.	3	-89	-222.58	2784.35	SLU 35	12.51	Si
ini.	3	-101	-2634.54	2784.35	SLU 77	1.06	Si
fin.	3	-101	-238.79	2784.35	SLU 77	11.66	Si
ini.	3	-88	-2341.71	2784.35	SLU 37	1.19	Si
fin.	3	-88	-219.03	2784.35	SLU 37	12.71	Si
ini.	3	-86	-2480.44	2784.35	SLU 69	1.12	Si
fin.	3	-86	-221.88	2784.35	SLU 69	12.55	Si
ini.	3	-99	-2315.56	2784.35	SLU 80	1.2	Si

Sezione	γM	N	M	Mu	Comb.	c.s.	Verifica
fin.	3	-99	-201.28	2784.35	SLU 80	13.83	Si
ini.	3	-99	-2603.21	2784.35	SLU 79	1.07	Si
fin.	3	-99	-235.24	2784.35	SLU 79	11.84	Si
ini.	3	-98	-2376.82	2784.35	SLU 74	1.17	Si
fin.	3	-98	-208.93	2784.35	SLU 74	13.33	Si
ini.	3	-100	-2346.89	2784.35	SLU 78	1.19	Si
fin.	3	-100	-204.82	2784.35	SLU 78	13.59	Si

Verifiche a taglio delle travi in muratura secondo §C8.7.1.3.1 in combinazioni non sismiche

Sezione	γM	N	M	V	Vt	Vp	Vt fess. diag.	Vt,lim	Comb.	c.s.	Verifica
ini.	3	-98	-2376.82	2647			1549	589	SLU 74	0.22	No
fin.	3	-98	-208.93	1697			1549	589	SLU 74	0.35	No
ini.	3	-101	-2634.54	2875			1550	590	SLU 77	0.21	No
fin.	3	-101	-238.79	1924			1550	590	SLU 77	0.31	No
ini.	3	-86	-2480.44	2738			1544	586	SLU 69	0.21	No
fin.	3	-86	-221.88	1787			1544	586	SLU 69	0.33	No
ini.	3	-99	-2603.21	2847			1549	589	SLU 79	0.21	No
fin.	3	-99	-235.24	1897			1549	589	SLU 79	0.31	No
ini.	3	-100	-2346.89	2621			1550	590	SLU 78	0.22	No
fin.	3	-100	-204.82	1671			1550	590	SLU 78	0.35	No
ini.	3	-89	-2373.05	2524			1545	587	SLU 35	0.23	No
fin.	3	-89	-222.58	1785			1545	587	SLU 35	0.33	No
ini.	3	-84	-2449.1	2710			1543	586	SLU 71	0.22	No
fin.	3	-84	-218.33	1759			1543	586	SLU 71	0.33	No
ini.	3	-87	-2260.98	2531			1545	587	SLU 56	0.23	No
fin.	3	-87	-197.55	1598			1545	587	SLU 56	0.37	No
ini.	3	-99	-2315.56	2593			1549	589	SLU 80	0.23	No
fin.	3	-99	-201.28	1643			1549	589	SLU 80	0.36	No
ini.	3	-104	-2411.53	2678			1551	590	SLU 83	0.22	No
fin.	3	-104	-212.62	1728			1551	590	SLU 83	0.34	No

Verifiche a pressoflessione delle travi in muratura in combinazioni sismiche

Sezione	γM	N	M	Mu	Comb.	c.s.	Verifica
ini.	2	-1540	-8991.24	4176.53	SLV 5	0.46	No
fin.	2	-1808	-732.19	4176.53	SLV 5	5.7	Si
ini.	2	-766	-5013.64	4176.53	SLV 1	0.83	No
fin.	2	-1026	-374.15	4176.53	SLV 1	11.16	Si
ini.	2	1243	5234.27	4176.53	SLV 7	0.8	No
fin.	2	1392	449.14	4176.53	SLV 7	9.3	Si
ini.	2	1415	6092.55	4176.53	SLV 11	0.69	No
fin.	2	1683	496.64	4176.53	SLV 11	8.41	Si
ini.	2	1243	5234.27	4176.53	SLV 8	0.8	No
fin.	2	1392	449.14	4176.53	SLV 8	9.3	Si
ini.	2	1415	6092.55	4176.53	SLV 12	0.69	No
fin.	2	1683	496.64	4176.53	SLV 12	8.41	Si
ini.	2	-1368	-8132.97	4176.53	SLV 9	0.51	No
fin.	2	-1517	-684.69	4176.53	SLV 9	6.1	Si
ini.	2	-1540	-8991.24	4176.53	SLV 6	0.46	No
fin.	2	-1808	-732.19	4176.53	SLV 6	5.7	Si
ini.	2	-1368	-8132.97	4176.53	SLV 10	0.51	No
fin.	2	-1517	-684.69	4176.53	SLV 10	6.1	Si
ini.	2	-766	-5013.64	4176.53	SLV 2	0.83	No
fin.	2	-1026	-374.15	4176.53	SLV 2	11.16	Si

Verifiche a taglio delle travi in muratura secondo §C8.7.1.3.1 in combinazioni sismiche

Sezione	γM	N	M	V	Vt	Vp	Vt fess. diag.	Vt,lim	Comb.	c.s.	Verifica
ini.	2	-1540	-8991.24	8568			2880	1139	SLV 5	0.13	No
fin.	2	-1808	-732.19	7863			2988	1182	SLV 5	0.15	No
ini.	2	-766	-5013.64	4929			2571	1005	SLV 2	0.2	No
fin.	2	-1026	-374.15	4051			2675	1052	SLV 2	0.26	No
ini.	2	1243	5234.27	-4402			2264	515	SLV 7	0.12	No
fin.	2	1392	449.14	-5255			2264	459	SLV 7	0.09	No
ini.	2	-1368	-8132.97	7797			2812	1110	SLV 9	0.14	No
fin.	2	-1517	-684.69	7196			2871	1135	SLV 9	0.16	No
ini.	2	-1540	-8991.24	8568			2880	1139	SLV 6	0.13	No
fin.	2	-1808	-732.19	7863			2988	1182	SLV 6	0.15	No
ini.	2	1415	6092.55	-5173			2264	450	SLV 12	0.09	No
fin.	2	1683	496.64	-5923			2264	320	SLV 12	0.05	No
ini.	2	1243	5234.27	-4402			2264	515	SLV 8	0.12	No
fin.	2	1392	449.14	-5255			2264	459	SLV 8	0.09	No
ini.	2	1415	6092.55	-5173			2264	450	SLV 11	0.09	No
fin.	2	1683	496.64	-5923			2264	320	SLV 11	0.05	No
ini.	2	-1368	-8132.97	7797			2812	1110	SLV 10	0.14	No
fin.	2	-1517	-684.69	7196			2871	1135	SLV 10	0.16	No
ini.	2	-766	-5013.64	4929			2571	1005	SLV 1	0.2	No
fin.	2	-1026	-374.15	4051			2675	1052	SLV 1	0.26	No

Tabella dei coefficienti di sicurezza minimi

Stato limite	Coeff.s.	Comb.	Verifica
PF_SLV	0.465	SLV 5	No
V_SLV	0.054	SLV 11	No
PF_SLU	1.057	SLU 77	Si
V_SLU	0.205	SLU 77	No

Trave di accoppiamento 120

Verifiche condotte secondo D.M. 17-01-18 (N.T.C.)

Dati geometrici

X ini.	Y ini.	Z ini.inf.	Z ini.sup.	H ini.	X fin.	Y fin.	Z fin.inf.	Z fin.sup	H fin.	Luce	Spessore	R. Trazione
-17.793	6.64	8.55	9.45	0.9	-16.793	6.64	8.55	9.45	0.9	1	0.28	30000

Caratteristiche del materiale

(Circolare 7 21-01-19 C8.5.I) Muratura in mattoni pieni e malta di calce LC2_Corti

fb_	fhk	fvk0	fhmedio	τ0	fv0	μ	ϕ	fvk,lim	E	G	FC
120000			172500	9000	20000	0.577	0.767	6500	320000000	128000000	1.2

Verifiche a pressoflessione delle travi in muratura in combinazioni non sismiche

Sezione	γM	N	M	Mu	Comb.	c.s.	Verifica
ini.	3	67	100.04	1150.68	SLU 83	11.5	Si
fin.	3	-563	214.65	1150.68	SLU 83	5.36	Si
ini.	3	64	94.68	1150.68	SLU 76	12.15	Si
fin.	3	-543	207.76	1150.68	SLU 76	5.54	Si
ini.	3	86	94.28	1150.68	SLU 78	12.2	Si
fin.	3	-565	221.84	1150.68	SLU 78	5.19	Si
ini.	3	63	96.23	1150.68	SLU 74	11.96	Si
fin.	3	-549	210.31	1150.68	SLU 74	5.47	Si
ini.	3	68	95.74	1150.68	SLU 75	12.02	Si
fin.	3	-545	210.06	1150.68	SLU 75	5.48	Si
ini.	3	81	94.78	1150.68	SLU 77	12.14	Si
fin.	3	-570	222.09	1150.68	SLU 77	5.18	Si
ini.	3	50	84.19	1150.68	SLU 69	13.67	Si
fin.	3	-542	207.01	1150.68	SLU 69	5.56	Si
ini.	3	78	93.56	1150.68	SLU 80	12.3	Si
fin.	3	-566	219.71	1150.68	SLU 80	5.24	Si
ini.	3	73	99.55	1150.68	SLU 84	11.56	Si
fin.	3	-558	214.39	1150.68	SLU 84	5.37	Si
ini.	3	72	94.05	1150.68	SLU 79	12.24	Si
fin.	3	-571	219.97	1150.68	SLU 79	5.23	Si

Verifiche a taglio delle travi in muratura secondo §C8.7.1.3.1 in combinazioni non sismiche

Sezione	γM	N	M	V	Vt	Vp	Vt fess. diag.	Vt,lim	Comb.	c.s.	Verifica
ini.	3	52	85.64	-1302			873	318	SLU 56	0.24	No
fin.	3	-534	203.76	1513			1066	420	SLU 56	0.28	No
ini.	3	72	94.05	-1310			873	314	SLU 79	0.24	No
fin.	3	-571	219.97	1559			1079	426	SLU 79	0.27	No
ini.	3	56	83.7	-1346			873	318	SLU 70	0.24	No
fin.	3	-537	206.76	1566			1067	421	SLU 70	0.27	No
ini.	3	50	84.19	-1349			873	319	SLU 69	0.24	No
fin.	3	-542	207.01	1566			1069	422	SLU 69	0.27	No
ini.	3	47	82.97	-1313			873	319	SLU 72	0.24	No
fin.	3	-539	204.63	1534			1067	421	SLU 72	0.27	No
ini.	3	57	85.15	-1300			873	317	SLU 57	0.24	No
fin.	3	-529	203.51	1513			1064	420	SLU 57	0.28	No
ini.	3	86	94.28	-1341			873	311	SLU 78	0.23	No
fin.	3	-565	221.84	1591			1077	425	SLU 78	0.27	No
ini.	3	78	93.56	-1308			873	313	SLU 80	0.24	No
fin.	3	-566	219.71	1559			1077	425	SLU 80	0.27	No
ini.	3	42	83.46	-1315			873	320	SLU 71	0.24	No
fin.	3	-543	204.89	1534			1069	422	SLU 71	0.27	No
ini.	3	81	94.78	-1344			873	312	SLU 77	0.23	No
fin.	3	-570	222.09	1591			1078	426	SLU 77	0.27	No

Verifiche a pressoflessione delle travi in muratura in combinazioni sismiche

Sezione	γM	N	M	Mu	Comb.	c.s.	Verifica
ini.	2	5102	-1011.66	1726.01	SLV 3	1.71	Si
fin.	2	-3768	1334.93	1726.01	SLV 3	1.29	Si
ini.	2	-5088	1146.56	1726.01	SLV 14	1.51	Si
fin.	2	2994	-1055.41	1726.01	SLV 14	1.64	Si
ini.	2	5102	-1011.66	1726.01	SLV 4	1.71	Si
fin.	2	-3768	1334.93	1726.01	SLV 4	1.29	Si
ini.	2	-4212	1062.83	1726.01	SLV 15	1.62	Si
fin.	2	3941	-1093.28	1726.01	SLV 15	1.58	Si
ini.	2	-57	-104.19	1726.01	SLV 5	16.57	Si
fin.	2	-3123	567.1	1726.01	SLV 5	3.04	Si
ini.	2	4226	-927.94	1726.01	SLV 1	1.86	Si
fin.	2	-4715	1372.79	1726.01	SLV 1	1.26	Si
ini.	2	-57	-104.19	1726.01	SLV 6	16.57	Si
fin.	2	-3123	567.1	1726.01	SLV 6	3.04	Si
ini.	2	-4212	1062.83	1726.01	SLV 16	1.62	Si
fin.	2	3941	-1093.28	1726.01	SLV 16	1.58	Si
ini.	2	-5088	1146.56	1726.01	SLV 13	1.51	Si
fin.	2	2994	-1055.41	1726.01	SLV 13	1.64	Si
ini.	2	4226	-927.94	1726.01	SLV 2	1.86	Si
fin.	2	-4715	1372.79	1726.01	SLV 2	1.26	Si

Verifiche a taglio delle travi in muratura secondo §C8.7.1.3.1 in combinazioni sismiche

Sezione	γM	N	M	V	Vt	Vp	Vt fess. diag.	Vt,lim	Comb.	c.s.	Verifica
ini.	2	2865	-383.26	-49			1310	0	SLV 8	0	No
fin.	2	36	440.88	3828			1310	486	SLV 8	0.13	No
ini.	2	4226	-927.94	4708			1310	0	SLV 2	0	No
fin.	2	-4715	1372.79	6740			3008	1074	SLV 2	0.16	No
ini.	2	2865	-383.26	-49			1310	0	SLV 7	0	No
fin.	2	36	440.88	3828			1310	486	SLV 7	0.13	No
ini.	2	4226	-927.94	4708			1310	0	SLV 1	0	No
fin.	2	-4715	1372.79	6740			3008	1074	SLV 1	0.16	No
ini.	2	5102	-1011.66	4257			1310	0	SLV 3	0	No

Sezione	γM	N	M	V	Vt	Vp	Vt fess. diag.	Vt,lim	Comb.	c.s.	Verifica
fin.	2	-3768	1334.93	7340			2666	985	SLV 3	0.13	No
ini.	2	71	239.09	-3288			1310	479	SLV 12	0.15	No
fin.	2	2349	-287.58	217			1310	0	SLV 12	0	No
ini.	2	5102	-1011.66	4257			1310	0	SLV 4	0	No
fin.	2	-3768	1334.93	7340			2666	985	SLV 4	0.13	No
ini.	2	71	239.09	-3288			1310	479	SLV 11	0.15	No
fin.	2	2349	-287.58	217			1310	0	SLV 11	0	No
ini.	2	-5088	1146.56	-6089			3142	1107	SLV 13	0.18	No
fin.	2	2994	-1055.41	-5298			1310	0	SLV 13	0	No
ini.	2	-5088	1146.56	-6089			3142	1107	SLV 14	0.18	No
fin.	2	2994	-1055.41	-5298			1310	0	SLV 14	0	No

Tabella dei coefficienti di sicurezza minimi

Stato limite	Coeff.s.	Comb.	Verifica
PF_SLV	1.257	SLV 1	Si
V_SLV	0	SLV 1	No
PF_SLU	5.181	SLU 77	Si
V_SLU	0.232	SLU 78	No

Trave di accoppiamento 121

Verifiche condotte secondo D.M. 17-01-18 (N.T.C.)

Dati geometrici

X ini.	Y ini.	Z ini.inf.	Z ini.sup.	H ini.	X fin.	Y fin.	Z fin.inf.	Z fin.sup	H fin.	Luce	Spessore	R. Trazione
-17.793	6.64	11.35	12.05	0.7	-16.793	6.64	11.35	12.05	0.7	1	0.28	30000

Caratteristiche del materiale

(Circolare 7 21-01-19 C8.5.I) Muratura in mattoni pieni e malta di calce LC2_Corti

fb_	fhk	fvk0	fhmedio	τ0	fv0	μ	ϕ	fvk,lim	E	G	FC
120000			172500	9000	20000	0.577	0.767	6500	320000000	128000000	1.2

Verifiche a pressoflessione delle travi in muratura in combinazioni non sismiche

Sezione	γM	N	M	Mu	Comb.	c.s.	Verifica
ini.	3	-387	-104.28	696.09	SLU 79	6.68	Si
fin.	3	-169	-109.09	696.09	SLU 79	6.38	Si
ini.	3	-401	-98.36	696.09	SLU 83	7.08	Si
fin.	3	-248	-115.16	696.09	SLU 83	6.04	Si
ini.	3	-371	-105.46	696.09	SLU 77	6.6	Si
fin.	3	-164	-112.22	696.09	SLU 77	6.2	Si
ini.	3	-384	-103.95	696.09	SLU 80	6.7	Si
fin.	3	-168	-108.86	696.09	SLU 80	6.39	Si
ini.	3	-344	-95.7	696.09	SLU 75	7.27	Si
fin.	3	-206	-111.56	696.09	SLU 75	6.24	Si
ini.	3	-398	-98.04	696.09	SLU 84	7.1	Si
fin.	3	-247	-114.93	696.09	SLU 84	6.06	Si
ini.	3	-368	-105.14	696.09	SLU 78	6.62	Si
fin.	3	-163	-111.99	696.09	SLU 78	6.22	Si
ini.	3	-374	-88.6	696.09	SLU 82	7.86	Si
fin.	3	-290	-114.5	696.09	SLU 82	6.08	Si
ini.	3	-377	-88.93	696.09	SLU 81	7.83	Si
fin.	3	-291	-114.73	696.09	SLU 81	6.07	Si
ini.	3	-347	-96.02	696.09	SLU 74	7.25	Si
fin.	3	-207	-111.79	696.09	SLU 74	6.23	Si

Verifiche a taglio delle travi in muratura secondo §C8.7.1.3.1 in combinazioni non sismiche

Sezione	γM	N	M	V	Vt	Vp	Vt fess. diag.	Vt,lim	Comb.	c.s.	Verifica
ini.	3	-401	-98.36	2177			641	253	SLU 83	0.12	No
fin.	3	-248	-115.16	-1662			598	234	SLU 83	0.14	No
ini.	3	-398	-98.04	2176			640	252	SLU 84	0.12	No
fin.	3	-247	-114.93	-1663			598	233	SLU 84	0.14	No
ini.	3	-347	-96.02	2110			626	246	SLU 74	0.12	No
fin.	3	-207	-111.79	-1609			586	228	SLU 74	0.14	No
ini.	3	-387	-104.28	2186			637	251	SLU 79	0.11	No
fin.	3	-169	-109.09	-1610			576	223	SLU 79	0.14	No
ini.	3	-344	-95.7	2109			625	246	SLU 75	0.12	No
fin.	3	-206	-111.56	-1610			586	228	SLU 75	0.14	No
ini.	3	-368	-105.14	2226			631	249	SLU 78	0.11	No
fin.	3	-163	-111.99	-1649			574	222	SLU 78	0.13	No
ini.	3	-281	-96.91	1975			607	238	SLU 70	0.12	No
fin.	3	-76	-96.83	-1436			550	210	SLU 70	0.15	No
ini.	3	-371	-105.46	2227			632	249	SLU 77	0.11	No
fin.	3	-164	-112.22	-1648			574	222	SLU 77	0.13	No
ini.	3	-359	-94.3	2068			629	248	SLU 76	0.12	No
fin.	3	-209	-108.28	-1572			587	228	SLU 76	0.15	No
ini.	3	-384	-103.95	2185			636	251	SLU 80	0.11	No
fin.	3	-168	-108.86	-1611			575	223	SLU 80	0.14	No

Verifiche a pressoflessione delle travi in muratura in combinazioni sismiche

Sezione	γM	N	M	Mu	Comb.	c.s.	Verifica
ini.	2	3364	620.35	1044.13	SLV 15	1.68	Si
fin.	2	-3087	-789.75	1044.13	SLV 15	1.32	Si
ini.	2	-3772	-739.12	1044.13	SLV 2	1.41	Si
fin.	2	2805	643.99	1044.13	SLV 2	1.62	Si
ini.	2	-3772	-739.12	1044.13	SLV 1	1.41	Si
fin.	2	2805	643.99	1044.13	SLV 1	1.62	Si

Sezione	γM	N	M	Mu	Comb.	c.s.	Verifica
ini.	2	3364	620.35	1044.13	SLV 16	1.68	Si
fin.	2	-3087	-789.75	1044.13	SLV 16	1.32	Si
ini.	2	-3042	-668.08	1044.13	SLV 4	1.56	Si
fin.	2	3421	741.05	1044.13	SLV 4	1.41	Si
ini.	2	-3042	-668.08	1044.13	SLV 3	1.56	Si
fin.	2	3421	741.05	1044.13	SLV 3	1.41	Si
ini.	2	-460	15.48	1044.13	SLV 10	67.43	Si
fin.	2	-2145	-464.27	1044.13	SLV 10	2.25	Si
ini.	2	2634	549.31	1044.13	SLV 13	1.9	Si
fin.	2	-3703	-886.81	1044.13	SLV 13	1.18	Si
ini.	2	2634	549.31	1044.13	SLV 14	1.9	Si
fin.	2	-3703	-886.81	1044.13	SLV 14	1.18	Si
ini.	2	-460	15.48	1044.13	SLV 9	67.43	Si
fin.	2	-2145	-464.27	1044.13	SLV 9	2.25	Si

Verifiche a taglio delle travi in muratura secondo §C8.7.1.3.1 in combinazioni sismiche

Sezione	γM	N	M	V	Vt	Vp	Vt fess. diag.	Vt,lim	Comb.	c.s.	Verifica
ini.	2	1974	252.28	-8			793	0	SLV 11	0	No
fin.	2	-89	-140.73	-1385			817	312	SLV 11	0.22	No
ini.	2	52	-134.25	2517			793	290	SLV 8	0.12	No
fin.	2	1863	318.51	925			793	0	SLV 8	0	No
ini.	2	-3042	-668.08	5511			1644	604	SLV 3	0.11	No
fin.	2	3421	741.05	3060			793	0	SLV 3	0	No
ini.	2	52	-134.25	2517			793	290	SLV 7	0.12	No
fin.	2	1863	318.51	925			793	0	SLV 7	0	No
ini.	2	-3042	-668.08	5511			1644	604	SLV 4	0.11	No
fin.	2	3421	741.05	3060			793	0	SLV 4	0	No
ini.	2	-3772	-739.12	5553			1849	657	SLV 2	0.12	No
fin.	2	2805	643.99	2579			793	0	SLV 2	0	No
ini.	2	1974	252.28	-8			793	0	SLV 12	0	No
fin.	2	-89	-140.73	-1385			817	312	SLV 12	0.22	No
ini.	2	-3772	-739.12	5553			1849	657	SLV 1	0.12	No
fin.	2	2805	643.99	2579			793	0	SLV 1	0	No
ini.	2	2634	549.31	-2863			793	0	SLV 14	0	No
fin.	2	-3703	-886.81	-5120			1830	652	SLV 14	0.13	No
ini.	2	2634	549.31	-2863			793	0	SLV 13	0	No
fin.	2	-3703	-886.81	-5120			1830	652	SLV 13	0.13	No

Tabella dei coefficienti di sicurezza minimi

Stato limite	Coeff.s.	Comb.	Verifica
PF_SLV	1.177	SLV 13	Si
V_SLV	0	SLV 1	No
PF_SLU	6.045	SLU 83	Si
V_SLU	0.112	SLU 78	No

Trave di accoppiamento 122

Verifiche condotte secondo D.M. 17-01-18 (N.T.C.)

Dati geometrici

X ini.	Y ini.	Z ini.inf.	Z ini.sup.	H ini.	X fin.	Y fin.	Z fin.inf.	Z fin.sup	H fin.	Luce	Spessore	R. Trazione
-12.868	6.64	8.55	9.45	0.9	-11.868	6.64	8.55	9.45	0.9	1	0.28	30000

Caratteristiche del materiale

(Circolare 7 21-01-19 C8.5.I) Muratura in mattoni pieni e malta di calce LC2_Corti

fb_	fhk	fvk0	fhmedio	τ0	fv0	μ	ϕ	fvk,lim	E	G	FC
120000			172500	9000	20000	0.577	0.767	6500	320000000	128000000	1.2

Verifiche a pressoflessione delle travi in muratura in combinazioni non sismiche

Sezione	γM	N	M	Mu	Comb.	c.s.	Verifica
ini.	3	-843	207.11	1150.68	SLU 80	5.56	Si
fin.	3	-418	37.01	1150.68	SLU 80	31.09	Si
ini.	3	-857	202.98	1150.68	SLU 74	5.67	Si
fin.	3	-446	38.51	1150.68	SLU 74	29.88	Si
ini.	3	-870	200.99	1150.68	SLU 82	5.72	Si
fin.	3	-456	32.37	1150.68	SLU 82	35.55	Si
ini.	3	-872	207.83	1150.68	SLU 84	5.54	Si
fin.	3	-443	33.75	1150.68	SLU 84	34.1	Si
ini.	3	-839	200.6	1150.68	SLU 76	5.74	Si
fin.	3	-428	35.3	1150.68	SLU 76	32.6	Si
ini.	3	-855	203.45	1150.68	SLU 75	5.66	Si
fin.	3	-442	38.01	1150.68	SLU 75	30.28	Si
ini.	3	-857	210.28	1150.68	SLU 78	5.47	Si
fin.	3	-429	39.39	1150.68	SLU 78	29.21	Si
ini.	3	-859	209.81	1150.68	SLU 77	5.48	Si
fin.	3	-433	39.89	1150.68	SLU 77	28.84	Si
ini.	3	-875	207.36	1150.68	SLU 83	5.55	Si
fin.	3	-447	34.25	1150.68	SLU 83	33.59	Si
ini.	3	-845	206.64	1150.68	SLU 79	5.57	Si
fin.	3	-422	37.52	1150.68	SLU 79	30.67	Si

Verifiche a taglio delle travi in muratura secondo §C8.7.1.3.1 in combinazioni non sismiche

Sezione	γM	N	M	V	Vt	Vp	Vt fess. diag.	Vt,lim	Comb.	c.s.	Verifica
ini.	3	-875	207.36	-1164			1188	470	SLU 83	0.4	No
fin.	3	-447	34.25	309			1034	407	SLU 83	1.32	Si
ini.	3	-857	210.28	-1215			1182	467	SLU 78	0.38	No

Sezione	γM	N	M	V	Vt	Vp	Vt fess. diag.	Vt,lim	Comb.	c.s.	Verifica
fin.	3	-429	39.39	362			1028	404	SLU 78	1.11	Si
ini.	3	-785	192.2	-1131			1156	457	SLU 69	0.4	No
fin.	3	-403	44.29	367			1019	400	SLU 69	1.09	Si
ini.	3	-783	192.68	-1133			1155	457	SLU 70	0.4	No
fin.	3	-399	43.79	366			1017	399	SLU 70	1.09	Si
ini.	3	-855	203.45	-1155			1181	467	SLU 75	0.4	No
fin.	3	-442	38.01	328			1033	406	SLU 75	1.24	Si
ini.	3	-872	207.83	-1167			1188	469	SLU 84	0.4	No
fin.	3	-443	33.75	307			1033	406	SLU 84	1.32	Si
ini.	3	-843	207.11	-1191			1177	465	SLU 80	0.39	No
fin.	3	-418	37.01	343			1024	402	SLU 80	1.17	Si
ini.	3	-857	202.98	-1153			1182	467	SLU 74	0.41	No
fin.	3	-446	38.51	330			1034	407	SLU 74	1.23	Si
ini.	3	-845	206.64	-1189			1178	466	SLU 79	0.39	No
fin.	3	-422	37.52	344			1025	403	SLU 79	1.17	Si
ini.	3	-859	209.81	-1213			1183	467	SLU 77	0.39	No
fin.	3	-433	39.89	364			1029	405	SLU 77	1.11	Si

Verifiche a pressoflessione delle travi in muratura in combinazioni sismiche

Sezione	γM	N	M	Mu	Comb.	c.s.	Verifica
ini.	2	2417	-1429.59	1726.01	SLV 4	1.21	Si
fin.	2	-3297	1434.01	1726.01	SLV 4	1.2	Si
ini.	2	-2957	1647.5	1726.01	SLV 15	1.05	Si
fin.	2	3242	-1411.92	1726.01	SLV 15	1.22	Si
ini.	2	1766	-1375.98	1726.01	SLV 1	1.25	Si
fin.	2	-3890	1470.53	1726.01	SLV 1	1.17	Si
ini.	2	2417	-1429.59	1726.01	SLV 3	1.21	Si
fin.	2	-3297	1434.01	1726.01	SLV 3	1.2	Si
ini.	2	-2487	686.67	1726.01	SLV 9	2.51	Si
fin.	2	-331	-336.72	1726.01	SLV 9	5.13	Si
ini.	2	-3608	1701.11	1726.01	SLV 13	1.01	Si
fin.	2	2649	-1375.4	1726.01	SLV 13	1.25	Si
ini.	2	-2957	1647.5	1726.01	SLV 16	1.05	Si
fin.	2	3242	-1411.92	1726.01	SLV 16	1.22	Si
ini.	2	-3608	1701.11	1726.01	SLV 14	1.01	Si
fin.	2	2649	-1375.4	1726.01	SLV 14	1.25	Si
ini.	2	-2487	686.67	1726.01	SLV 10	2.51	Si
fin.	2	-331	-336.72	1726.01	SLV 10	5.13	Si
ini.	2	1766	-1375.98	1726.01	SLV 2	1.25	Si
fin.	2	-3890	1470.53	1726.01	SLV 2	1.17	Si

Verifiche a taglio delle travi in muratura secondo §C8.7.1.3.1 in combinazioni sismiche

Sezione	γM	N	M	V	Vt	Vp	Vt fess. diag.	Vt,lim	Comb.	c.s.	Verifica
ini.	2	1296	-415.15	662			1310	0	SLV 7	0	No
fin.	2	-317	395.33	2199			1424	552	SLV 7	0.25	No
ini.	2	-3608	1701.11	-6225			2609	969	SLV 13	0.16	No
fin.	2	2649	-1375.4	-5478			1310	0	SLV 13	0	No
ini.	2	-3608	1701.11	-6225			2609	969	SLV 14	0.16	No
fin.	2	2649	-1375.4	-5478			1310	0	SLV 14	0	No
ini.	2	2417	-1429.59	4705			1310	0	SLV 4	0	No
fin.	2	-3297	1434.01	5897			2497	938	SLV 4	0.16	No
ini.	2	2417	-1429.59	4705			1310	0	SLV 3	0	No
fin.	2	-3297	1434.01	5897			2497	938	SLV 3	0.16	No
ini.	2	1766	-1375.98	4848			1310	0	SLV 1	0	No
fin.	2	-3890	1470.53	5711			2711	997	SLV 1	0.17	No
ini.	2	-316	507.98	-2660			1424	551	SLV 12	0.21	No
fin.	2	1645	-458.44	-1158			1310	0	SLV 12	0	No
ini.	2	-316	507.98	-2660			1424	551	SLV 11	0.21	No
fin.	2	1645	-458.44	-1158			1310	0	SLV 11	0	No
ini.	2	1766	-1375.98	4848			1310	0	SLV 2	0	No
fin.	2	-3890	1470.53	5711			2711	997	SLV 2	0.17	No
ini.	2	1296	-415.15	662			1310	0	SLV 8	0	No
fin.	2	-317	395.33	2199			1424	552	SLV 8	0.25	No

Tabella dei coefficienti di sicurezza minimi

Stato limite	Coeff.s.	Comb.	Verifica
PF_SLV	1.015	SLV 13	Si
V_SLV	0	SLV 1	No
PF_SLU	5.472	SLU 78	Si
V_SLU	0.384	SLU 78	No

Trave di accoppiamento 123

Verifiche condotte secondo D.M. 17-01-18 (N.T.C.)

Dati geometrici

X ini.	Y ini.	Z ini.inf.	Z ini.sup.	H ini.	X fin.	Y fin.	Z fin.inf.	Z fin.sup	H fin.	Luce	Spessore	R. Trazione
-12.868	6.64	11.35	12.05	0.7	-11.868	6.64	11.35	12.05	0.7	1	0.28	30000

Caratteristiche del materiale

(Circolare 7 21-01-19 C8.5.I) Muratura in mattoni pieni e malta di calce LC2_Corti

fb_	fhk	fvk0	fhmedio	τ0	fv0	μ	ϕ	fvk,lim	E	G	FC
120000			172500	9000	20000	0.577	0.767	6500	320000000	128000000	1.2

Verifiche a pressoflessione delle travi in muratura in combinazioni non sismiche

Sezione	γM	N	M	Mu	Comb.	c.s.	Verifica

Sezione	γM	N	M	Mu	Comb.	c.s.	Verifica
ini.	3	-254	-74.08	696.09	SLU 81	9.4	Si
fin.	3	-422	-193.97	696.09	SLU 81	3.59	Si
ini.	3	-257	-79.7	696.09	SLU 77	8.73	Si
fin.	3	-421	-204.69	696.09	SLU 77	3.4	Si
ini.	3	-260	-77.72	696.09	SLU 83	8.96	Si
fin.	3	-430	-202.44	696.09	SLU 83	3.44	Si
ini.	3	-247	-77.92	696.09	SLU 79	8.93	Si
fin.	3	-408	-200.96	696.09	SLU 79	3.46	Si
ini.	3	-251	-75.57	696.09	SLU 75	9.21	Si
fin.	3	-415	-196.67	696.09	SLU 75	3.54	Si
ini.	3	-251	-76.05	696.09	SLU 74	9.15	Si
fin.	3	-413	-196.23	696.09	SLU 74	3.55	Si
ini.	3	-260	-77.24	696.09	SLU 84	9.01	Si
fin.	3	-432	-202.88	696.09	SLU 84	3.43	Si
ini.	3	-254	-73.6	696.09	SLU 82	9.46	Si
fin.	3	-424	-194.41	696.09	SLU 82	3.58	Si
ini.	3	-247	-77.44	696.09	SLU 80	8.99	Si
fin.	3	-410	-201.41	696.09	SLU 80	3.46	Si
ini.	3	-257	-79.22	696.09	SLU 78	8.79	Si
fin.	3	-423	-205.14	696.09	SLU 78	3.39	Si

Verifiche a taglio delle travi in muratura secondo §C8.7.1.3.1 in combinazioni non sismiche

Sezione	γM	N	M	V	Vt	Vp	Vt fess. diag.	Vt,lim	Comb.	c.s.	Verifica
ini.	3	-247	-77.92	1043			598	233	SLU 79	0.22	No
fin.	3	-408	-200.96	-1486			643	253	SLU 79	0.17	No
ini.	3	-251	-75.57	1009			599	234	SLU 75	0.23	No
fin.	3	-415	-196.67	-1450			644	254	SLU 75	0.18	No
ini.	3	-260	-77.24	1031			601	235	SLU 84	0.23	No
fin.	3	-432	-202.88	-1487			649	256	SLU 84	0.17	No
ini.	3	-257	-79.22	1059			600	235	SLU 78	0.22	No
fin.	3	-423	-205.14	-1511			647	255	SLU 78	0.17	No
ini.	3	-247	-77.44	1042			597	233	SLU 80	0.22	No
fin.	3	-410	-201.41	-1489			643	254	SLU 80	0.17	No
ini.	3	-251	-76.05	1010			599	234	SLU 74	0.23	No
fin.	3	-413	-196.23	-1448			644	254	SLU 74	0.18	No
ini.	3	-257	-79.7	1060			600	235	SLU 77	0.22	No
fin.	3	-421	-204.69	-1508			646	255	SLU 77	0.17	No
ini.	3	-260	-77.72	1031			601	235	SLU 83	0.23	No
fin.	3	-430	-202.44	-1484			649	256	SLU 83	0.17	No
ini.	3	-254	-73.6	981			599	234	SLU 82	0.24	No
fin.	3	-424	-194.41	-1427			647	255	SLU 82	0.18	No
ini.	3	-240	-73.48	992			596	233	SLU 76	0.23	No
fin.	3	-404	-193.24	-1430			641	253	SLU 76	0.18	No

Verifiche a pressoflessione delle travi in muratura in combinazioni sismiche

Sezione	γM	N	M	Mu	Comb.	c.s.	Verifica
ini.	2	-2610	-942.03	1044.13	SLV 1	1.11	Si
fin.	2	1416	661.18	1044.13	SLV 1	1.58	Si
ini.	2	1854	821.87	1044.13	SLV 13	1.27	Si
fin.	2	-2416	-969.79	1044.13	SLV 13	1.08	Si
ini.	2	-240	177.63	1044.13	SLV 9	5.88	Si
fin.	2	-1648	-466.95	1044.13	SLV 9	2.24	Si
ini.	2	1854	821.87	1044.13	SLV 14	1.27	Si
fin.	2	-2416	-969.79	1044.13	SLV 14	1.08	Si
ini.	2	-2154	-919	1044.13	SLV 3	1.14	Si
fin.	2	1907	719.47	1044.13	SLV 3	1.45	Si
ini.	2	-2154	-919	1044.13	SLV 4	1.14	Si
fin.	2	1907	719.47	1044.13	SLV 4	1.45	Si
ini.	2	-2610	-942.03	1044.13	SLV 2	1.11	Si
fin.	2	1416	661.18	1044.13	SLV 2	1.58	Si
ini.	2	2309	844.9	1044.13	SLV 16	1.24	Si
fin.	2	-1925	-911.5	1044.13	SLV 16	1.15	Si
ini.	2	2309	844.9	1044.13	SLV 15	1.24	Si
fin.	2	-1925	-911.5	1044.13	SLV 15	1.15	Si
ini.	2	-240	177.63	1044.13	SLV 10	5.88	Si
fin.	2	-1648	-466.95	1044.13	SLV 10	2.24	Si

Verifiche a taglio delle travi in muratura secondo §C8.7.1.3.1 in combinazioni sismiche

Sezione	γM	N	M	V	Vt	Vp	Vt fess. diag.	Vt,lim	Comb.	c.s.	Verifica
ini.	2	-60	-274.76	1865			809	307	SLV 8	0.16	No
fin.	2	1138	216.63	-38			793	0	SLV 8	0	No
ini.	2	1854	821.87	-2703			793	0	SLV 13	0	No
fin.	2	-2416	-969.79	-4051			1469	555	SLV 13	0.14	No
ini.	2	-2154	-919	4025			1396	533	SLV 4	0.13	No
fin.	2	1907	719.47	2146			793	0	SLV 4	0	No
ini.	2	-2154	-919	4025			1396	533	SLV 3	0.13	No
fin.	2	1907	719.47	2146			793	0	SLV 3	0	No
ini.	2	-2610	-942.03	3896			1523	571	SLV 1	0.15	No
fin.	2	1416	661.18	2155			793	0	SLV 1	0	No
ini.	2	1279	254.41	-115			793	0	SLV 12	0	No
fin.	2	-11	-272.66	-1900			796	300	SLV 12	0.16	No
ini.	2	1279	254.41	-115			793	0	SLV 11	0	No
fin.	2	-11	-272.66	-1900			796	300	SLV 11	0.16	No
ini.	2	1854	821.87	-2703			793	0	SLV 14	0	No
fin.	2	-2416	-969.79	-4051			1469	555	SLV 14	0.14	No
ini.	2	-2610	-942.03	3896			1523	571	SLV 2	0.15	No
fin.	2	1416	661.18	2155			793	0	SLV 2	0	No
ini.	2	-60	-274.76	1865			809	307	SLV 7	0.16	No
fin.	2	1138	216.63	-38			793	0	SLV 7	0	No

Tabella dei coefficienti di sicurezza minimi

Stato limite	Coeff.s.	Comb.	Verifica
PF_SLV	1.077	SLV 13	Si
V_SLV	0	SLV 1	No
PF_SLU	3.393	SLU 78	Si
V_SLU	0.169	SLU 78	No

Trave di accoppiamento 124

Verifiche condotte secondo D.M. 17-01-18 (N.T.C.)

Dati geometrici

X ini.	Y ini.	Z ini.inf.	Z ini.sup.	H ini.	X fin.	Y fin.	Z fin.inf.	Z fin.sup	H fin.	Luce	Spessore	R. Trazione
-7.943	6.64	8.55	9.45	0.9	-6.943	6.64	8.55	9.45	0.9	1	0.28	30000

Caratteristiche del materiale

(Circolare 7 21-01-19 C8.5.I) Muratura in mattoni pieni e malta di calce LC2_Corti

fb_	fhk	fvk0	fhmedio	τ0	fv0	μ	ϕ	fvk,lim	E	G	FC
120000			172500	9000	20000	0.577	0.767	6500	320000000	128000000	1.2

Verifiche a pressoflessione delle travi in muratura in combinazioni non sismiche

Sezione	γM	N	M	Mu	Comb.	c.s.	Verifica
ini.	3	-100	127.21	1150.68	SLU 76	9.05	Si
fin.	3	-41	144.46	1150.68	SLU 76	7.97	Si
ini.	3	-72	111.31	1150.68	SLU 73	10.34	Si
fin.	3	-88	152.68	1150.68	SLU 73	7.54	Si
ini.	3	-69	114.77	1150.68	SLU 82	10.03	Si
fin.	3	-83	159.7	1150.68	SLU 82	7.21	Si
ini.	3	-96	130.66	1150.68	SLU 84	8.81	Si
fin.	3	-35	151.48	1150.68	SLU 84	7.6	Si
ini.	3	-99	130.73	1150.68	SLU 83	8.8	Si
fin.	3	-39	151.75	1150.68	SLU 83	7.58	Si
ini.	3	-71	101.88	1150.68	SLU 60	11.29	Si
fin.	3	-113	147.98	1150.68	SLU 60	7.78	Si
ini.	3	-100	128.18	1150.68	SLU 74	8.98	Si
fin.	3	-47	148.05	1150.68	SLU 74	7.77	Si
ini.	3	-97	128.11	1150.68	SLU 75	8.98	Si
fin.	3	-43	147.78	1150.68	SLU 75	7.79	Si
ini.	3	-68	101.82	1150.68	SLU 61	11.3	Si
fin.	3	-110	147.71	1150.68	SLU 61	7.79	Si
ini.	3	-72	114.83	1150.68	SLU 81	10.02	Si
fin.	3	-87	159.97	1150.68	SLU 81	7.19	Si

Verifiche a taglio delle travi in muratura secondo §C8.7.1.3.1 in combinazioni non sismiche

Sezione	γM	N	M	V	Vt	Vp	Vt fess. diag.	Vt,lim	Comb.	c.s.	Verifica
ini.	3	-141	136.11	-1196			924	355	SLU 69	0.3	No
fin.	3	-17	123.87	1364			880	332	SLU 69	0.24	No
ini.	3	-138	136.05	-1196			923	355	SLU 70	0.3	No
fin.	3	-13	123.6	1363			878	331	SLU 70	0.24	No
ini.	3	-97	128.11	-1074			908	347	SLU 75	0.32	No
fin.	3	-43	147.78	1371			889	337	SLU 75	0.25	No
ini.	3	-124	131.06	-1136			918	352	SLU 57	0.31	No
fin.	3	-22	127.56	1335			881	333	SLU 57	0.25	No
ini.	3	-130	143.15	-1158			920	353	SLU 80	0.3	No
fin.	3	4	136.42	1329			873	328	SLU 80	0.25	No
ini.	3	-125	144.01	-1185			918	352	SLU 78	0.3	No
fin.	3	4	139.56	1375			873	328	SLU 78	0.24	No
ini.	3	-128	144.08	-1185			919	353	SLU 77	0.3	No
fin.	3	1	139.83	1375			873	329	SLU 77	0.24	No
ini.	3	-100	128.18	-1073			909	348	SLU 74	0.32	No
fin.	3	-47	148.05	1371			890	338	SLU 74	0.25	No
ini.	3	-133	143.21	-1157			921	354	SLU 79	0.31	No
fin.	3	1	136.69	1329			873	329	SLU 79	0.25	No
ini.	3	-127	131.13	-1136			919	353	SLU 56	0.31	No
fin.	3	-26	127.84	1336			883	334	SLU 56	0.25	No

Verifiche a pressoflessione delle travi in muratura in combinazioni sismiche

Sezione	γM	N	M	Mu	Comb.	c.s.	Verifica
ini.	2	3548	-1005.39	1726.01	SLV 4	1.72	Si
fin.	2	-3949	1007.99	1726.01	SLV 4	1.71	Si
ini.	2	2728	-962.54	1726.01	SLV 2	1.79	Si
fin.	2	-4766	1058.35	1726.01	SLV 2	1.63	Si
ini.	2	3548	-1005.39	1726.01	SLV 3	1.72	Si
fin.	2	-3949	1007.99	1726.01	SLV 3	1.71	Si
ini.	2	-3679	1163.4	1726.01	SLV 14	1.48	Si
fin.	2	3774	-793.11	1726.01	SLV 14	2.18	Si
ini.	2	-2393	469.31	1726.01	SLV 9	3.68	Si
fin.	2	-169	-86.34	1726.01	SLV 9	19.99	Si
ini.	2	-2860	1120.56	1726.01	SLV 16	1.54	Si
fin.	2	4592	-843.47	1726.01	SLV 16	2.05	Si
ini.	2	-2393	469.31	1726.01	SLV 10	3.68	Si
fin.	2	-169	-86.34	1726.01	SLV 10	19.99	Si
ini.	2	2728	-962.54	1726.01	SLV 1	1.79	Si
fin.	2	-4766	1058.35	1726.01	SLV 1	1.63	Si
ini.	2	-2860	1120.56	1726.01	SLV 15	1.54	Si
fin.	2	4592	-843.47	1726.01	SLV 15	2.05	Si
ini.	2	-3679	1163.4	1726.01	SLV 13	1.48	Si

Sezione	γM	N	M	Mu	Comb.	c.s.	Verifica
fin.	2	3774	-793.11	1726.01	SLV 13	2.18	Si

Verifiche a taglio delle travi in muratura secondo §C8.7.1.3.1 in combinazioni sismiche

Sezione	γM	N	M	V	Vt	Vp	Vt fess. diag.	Vt,lim	Comb.	c.s.	Verifica
ini.	2	2728	-962.54	4804			1310	0	SLV 1	0	No
fin.	2	-4766	1058.35	5475			3026	1078	SLV 1	0.2	No
ini.	2	339	326.49	-3091			1310	422	SLV 12	0.14	No
fin.	2	2557	-254.21	772			1310	0	SLV 12	0	No
ini.	2	-3679	1163.4	-5756			2635	976	SLV 14	0.17	No
fin.	2	3774	-793.11	-4203			1310	0	SLV 14	0	No
ini.	2	3548	-1005.39	4328			1310	0	SLV 4	0	No
fin.	2	-3949	1007.99	6208			2732	1002	SLV 4	0.16	No
ini.	2	2261	-311.29	77			1310	0	SLV 7	0	No
fin.	2	-6	301.23	3676			1312	494	SLV 7	0.13	No
ini.	2	2261	-311.29	77			1310	0	SLV 8	0	No
fin.	2	-6	301.23	3676			1312	494	SLV 8	0.13	No
ini.	2	339	326.49	-3091			1310	422	SLV 11	0.14	No
fin.	2	2557	-254.21	772			1310	0	SLV 11	0	No
ini.	2	-3679	1163.4	-5756			2635	976	SLV 13	0.17	No
fin.	2	3774	-793.11	-4203			1310	0	SLV 13	0	No
ini.	2	2728	-962.54	4804			1310	0	SLV 2	0	No
fin.	2	-4766	1058.35	5475			3026	1078	SLV 2	0.2	No
ini.	2	3548	-1005.39	4328			1310	0	SLV 3	0	No
fin.	2	-3949	1007.99	6208			2732	1002	SLV 3	0.16	No

Tabella dei coefficienti di sicurezza minimi

Stato limite	Coeff.s.	Comb.	Verifica
PF_SLV	1.484	SLV 13	Si
V_SLV	0	SLV 1	No
PF_SLU	7.193	SLU 81	Si
V_SLU	0.238	SLU 78	No

Trave di accoppiamento 125

Verifiche condotte secondo D.M. 17-01-18 (N.T.C.)

Dati geometrici

X ini.	Y ini.	Z ini.inf.	Z ini.sup.	H ini.	X fin.	Y fin.	Z fin.inf.	Z fin.sup	H fin.	Luce	Spessore	R. Trazione
-7.943	6.64	11.35	12.05	0.7	-6.943	6.64	11.35	12.05	0.7	1	0.28	30000

Caratteristiche del materiale

(Circolare 7 21-01-19 C8.5.I) Muratura in mattoni pieni e malta di calce LC2_Corti

fb_	fhk	fvk0	fhmedio	τ0	fv0	μ	ϕ	fvk,lim	E	G	FC
120000			172500	9000	20000	0.577	0.767	6500	320000000	128000000	1.2

Verifiche a pressoflessione delle travi in muratura in combinazioni non sismiche

Sezione	γM	N	M	Mu	Comb.	c.s.	Verifica
ini.	3	-200	-127.02	696.09	SLU 74	5.48	Si
fin.	3	-176	-72.88	696.09	SLU 74	9.55	Si
ini.	3	-312	-135.54	696.09	SLU 82	5.14	Si
fin.	3	-185	-61.68	696.09	SLU 82	11.29	Si
ini.	3	-270	-122.54	696.09	SLU 60	5.68	Si
fin.	3	-127	-51.65	696.09	SLU 60	13.48	Si
ini.	3	-200	-126.91	696.09	SLU 75	5.48	Si
fin.	3	-174	-72.72	696.09	SLU 75	9.57	Si
ini.	3	-313	-135.65	696.09	SLU 81	5.13	Si
fin.	3	-187	-61.84	696.09	SLU 81	11.26	Si
ini.	3	-231	-129.3	696.09	SLU 83	5.38	Si
fin.	3	-221	-74.93	696.09	SLU 83	9.29	Si
ini.	3	-194	-122.06	696.09	SLU 76	5.7	Si
fin.	3	-189	-71.83	696.09	SLU 76	9.69	Si
ini.	3	-230	-129.19	696.09	SLU 84	5.39	Si
fin.	3	-219	-74.77	696.09	SLU 84	9.31	Si
ini.	3	-275	-128.41	696.09	SLU 73	5.42	Si
fin.	3	-155	-58.74	696.09	SLU 73	11.85	Si
ini.	3	-269	-122.44	696.09	SLU 61	5.69	Si
fin.	3	-125	-51.5	696.09	SLU 61	13.52	Si

Verifiche a taglio delle travi in muratura secondo §C8.7.1.3.1 in combinazioni non sismiche

Sezione	γM	N	M	V	Vt	Vp	Vt fess. diag.	Vt,lim	Comb.	c.s.	Verifica
ini.	3	-33	-104.09	1457			538	204	SLU 70	0.14	No
fin.	3	-141	-79.19	-1762			568	219	SLU 70	0.12	No
ini.	3	-230	-129.19	1727			593	231	SLU 84	0.13	No
fin.	3	-219	-74.77	-1924			590	230	SLU 84	0.12	No
ini.	3	-194	-122.06	1632			583	226	SLU 76	0.14	No
fin.	3	-189	-71.83	-1826			581	226	SLU 76	0.12	No
ini.	3	-118	-120.56	1679			561	216	SLU 78	0.13	No
fin.	3	-208	-85.81	-1992			587	228	SLU 78	0.11	No
ini.	3	-113	-115.89	1631			560	215	SLU 79	0.13	No
fin.	3	-226	-85.19	-1953			592	231	SLU 79	0.12	No
ini.	3	-112	-115.78	1632			560	215	SLU 80	0.13	No
fin.	3	-224	-85.03	-1954			591	230	SLU 80	0.12	No
ini.	3	-231	-129.3	1726			593	231	SLU 83	0.13	No
fin.	3	-221	-74.93	-1924			590	230	SLU 83	0.12	No
ini.	3	-200	-126.91	1679			584	227	SLU 75	0.14	No
fin.	3	-174	-72.72	-1864			577	224	SLU 75	0.12	No

Sezione	γM	N	M	V	Vt	Vp	Vt fess. diag.	Vt,lim	Comb.	c.s.	Verifica
ini.	3	-119	-120.67	1679			562	216	SLU 77	0.13	No
fin.	3	-210	-85.97	-1992			587	229	SLU 77	0.11	No
ini.	3	-200	-127.02	1678			585	227	SLU 74	0.14	No
fin.	3	-176	-72.88	-1864			578	224	SLU 74	0.12	No

Verifiche a pressoflessione delle travi in muratura in combinazioni sismiche

Sezione	γM	N	M	Mu	Comb.	c.s.	Verifica
ini.	2	-3744	-840.24	1044.13	SLV 1	1.24	Si
fin.	2	2200	517.15	1044.13	SLV 1	2.02	Si
ini.	2	-3149	-755.52	1044.13	SLV 4	1.38	Si
fin.	2	2846	583.75	1044.13	SLV 4	1.79	Si
ini.	2	2825	579.38	1044.13	SLV 13	1.8	Si
fin.	2	-2999	-663.64	1044.13	SLV 13	1.57	Si
ini.	2	2825	579.38	1044.13	SLV 14	1.8	Si
fin.	2	-2999	-663.64	1044.13	SLV 14	1.57	Si
ini.	2	3420	664.1	1044.13	SLV 16	1.57	Si
fin.	2	-2352	-597.04	1044.13	SLV 16	1.75	Si
ini.	2	-2139	-442.22	1044.13	SLV 5	2.36	Si
fin.	2	-374	26.17	1044.13	SLV 5	39.9	Si
ini.	2	-3744	-840.24	1044.13	SLV 2	1.24	Si
fin.	2	2200	517.15	1044.13	SLV 2	2.02	Si
ini.	2	-3149	-755.52	1044.13	SLV 3	1.38	Si
fin.	2	2846	583.75	1044.13	SLV 3	1.79	Si
ini.	2	3420	664.1	1044.13	SLV 15	1.57	Si
fin.	2	-2352	-597.04	1044.13	SLV 15	1.75	Si
ini.	2	-2139	-442.22	1044.13	SLV 6	2.36	Si
fin.	2	-374	26.17	1044.13	SLV 6	39.9	Si

Verifiche a taglio delle travi in muratura secondo §C8.7.1.3.1 in combinazioni sismiche

Sezione	γM	N	M	V	Vt	Vp	Vt fess. diag.	Vt,lim	Comb.	c.s.	Verifica
ini.	2	-156	-159.81	1440			836	321	SLV 8	0.22	No
fin.	2	1781	248.18	670			793	0	SLV 8	0	No
ini.	2	-156	-159.81	1440			836	321	SLV 7	0.22	No
fin.	2	1781	248.18	670			793	0	SLV 7	0	No
ini.	2	-3149	-755.52	4442			1674	612	SLV 4	0.14	No
fin.	2	2846	583.75	2800			793	0	SLV 4	0	No
ini.	2	-3744	-840.24	4880			1841	655	SLV 2	0.13	No
fin.	2	2200	517.15	2385			793	0	SLV 2	0	No
ini.	2	1815	266.08	-695			793	0	SLV 11	0	No
fin.	2	222	-106.06	-1570			793	262	SLV 11	0.17	No
ini.	2	2825	579.38	-2237			793	0	SLV 13	0	No
fin.	2	-2999	-663.64	-5081			1632	601	SLV 13	0.12	No
ini.	2	-3149	-755.52	4442			1674	612	SLV 3	0.14	No
fin.	2	2846	583.75	2800			793	0	SLV 3	0	No
ini.	2	1815	266.08	-695			793	0	SLV 12	0	No
fin.	2	222	-106.06	-1570			793	262	SLV 12	0.17	No
ini.	2	-3744	-840.24	4880			1841	655	SLV 1	0.13	No
fin.	2	2200	517.15	2385			793	0	SLV 1	0	No
ini.	2	2825	579.38	-2237			793	0	SLV 14	0	No
fin.	2	-2999	-663.64	-5081			1632	601	SLV 14	0.12	No

Tabella dei coefficienti di sicurezza minimi

Stato limite	Coeff.s.	Comb.	Verifica
PF_SLV	1.243	SLV 1	Si
V_SLV	0	SLV 1	No
PF_SLU	5.131	SLU 81	Si
V_SLU	0.115	SLU 78	No

Trave di accoppiamento 126

Verifiche condotte secondo D.M. 17-01-18 (N.T.C.)

Dati geometrici

X ini.	Y ini.	Z ini.inf.	Z ini.sup.	H ini.	X fin.	Y fin.	Z fin.inf.	Z fin.sup	H fin.	Luce	Spessore	R. Trazione
-19.8	1.141	10.65	12.05	1.4	-20.6	1.141	10.65	12.05	1.4	0.8	0.28	30000

Caratteristiche del materiale

(Circolare 7 21-01-19 C8.5.I) Muratura in mattoni pieni e malta di calce LC2_Corti

fb_	fhk	fvk0	fhmedio	τ0	fv0	μ	ϕ	fvk,lim	E	G	FC
120000			172500	9000	20000	0.577	0.767	6500	320000000	128000000	1.2

Verifiche a pressoflessione delle travi in muratura in combinazioni non sismiche

Sezione	γM	N	M	Mu	Comb.	c.s.	Verifica
ini.	3	-3704	1813.97	2784.35	SLU 84	1.53	Si
fin.	3	-3704	-1864	2784.35	SLU 84	1.49	Si
ini.	3	-3686	1850.27	2784.35	SLU 83	1.5	Si
fin.	3	-3686	-1899.24	2784.35	SLU 83	1.47	Si
ini.	3	-3703	1735.69	2784.35	SLU 82	1.6	Si
fin.	3	-3703	-1787.19	2784.35	SLU 82	1.56	Si
ini.	3	-3475	1830.35	2784.35	SLU 79	1.52	Si
fin.	3	-3475	-1888.68	2784.35	SLU 79	1.47	Si
ini.	3	-3479	1853.16	2784.35	SLU 77	1.5	Si
fin.	3	-3479	-1906.58	2784.35	SLU 77	1.46	Si
ini.	3	-3493	1794.06	2784.35	SLU 80	1.55	Si
fin.	3	-3493	-1853.43	2784.35	SLU 80	1.5	Si
ini.	3	-3497	1738.59	2784.35	SLU 75	1.6	Si

Sezione	γM	N	M	Mu	Comb.	c.s.	Verifica
fin.	3	-3497	-1794.53	2784.35	SLU 75	1.55	Si
ini.	3	-3685	1771.99	2784.35	SLU 81	1.57	Si
fin.	3	-3685	-1822.44	2784.35	SLU 81	1.53	Si
ini.	3	-3478	1774.88	2784.35	SLU 74	1.57	Si
fin.	3	-3478	-1829.78	2784.35	SLU 74	1.52	Si
ini.	3	-3497	1816.87	2784.35	SLU 78	1.53	Si
fin.	3	-3497	-1871.33	2784.35	SLU 78	1.49	Si

Verifiche a taglio delle travi in muratura secondo §C8.7.1.3.1 in combinazioni non sismiche

Sezione	γM	N	M	V	Vt	Vp	Vt fess. diag.	Vt,lim	Comb.	c.s.	Verifica
ini.	3	-3497	1738.59	-3255			2908	1089	SLU 75	0.33	No
fin.	3	-3497	-1794.53	-5650			2908	1089	SLU 75	0.19	No
ini.	3	-3497	1816.87	-3449			2909	1089	SLU 78	0.32	No
fin.	3	-3497	-1871.33	-5843			2909	1089	SLU 78	0.19	No
ini.	3	-3493	1794.06	-3398			2907	1089	SLU 80	0.32	No
fin.	3	-3493	-1853.43	-5793			2907	1089	SLU 80	0.19	No
ini.	3	-3685	1771.99	-3222			2984	1110	SLU 81	0.34	No
fin.	3	-3685	-1822.44	-5836			2984	1110	SLU 81	0.19	No
ini.	3	-3479	1853.16	-3538			2901	1087	SLU 77	0.31	No
fin.	3	-3479	-1906.58	-5933			2901	1087	SLU 77	0.18	No
ini.	3	-3475	1830.35	-3487			2899	1087	SLU 79	0.31	No
fin.	3	-3475	-1888.68	-5882			2899	1087	SLU 79	0.18	No
ini.	3	-3703	1735.69	-3133			2991	1112	SLU 82	0.36	No
fin.	3	-3703	-1787.19	-5746			2991	1112	SLU 82	0.19	No
ini.	3	-3478	1774.88	-3344			2901	1087	SLU 74	0.33	No
fin.	3	-3478	-1829.78	-5739			2901	1087	SLU 74	0.19	No
ini.	3	-3704	1813.97	-3327			2991	1112	SLU 84	0.33	No
fin.	3	-3704	-1864	-5940			2991	1112	SLU 84	0.19	No
ini.	3	-3686	1850.27	-3416			2984	1110	SLU 83	0.33	No
fin.	3	-3686	-1899.24	-6030			2984	1110	SLU 83	0.18	No

Verifiche a pressoflessione delle travi in muratura in combinazioni sismiche

Sezione	γM	N	M	Mu	Comb.	c.s.	Verifica
ini.	2	-1099	4127.69	4176.53	SLV 1	1.01	Si
fin.	2	-1601	-4276.64	4176.53	SLV 1	0.98	No
ini.	2	-2334	3006.45	4176.53	SLV 6	1.39	Si
fin.	2	-2505	-2960.91	4176.53	SLV 6	1.41	Si
ini.	2	-2334	3006.45	4176.53	SLV 5	1.39	Si
fin.	2	-2505	-2960.91	4176.53	SLV 5	1.41	Si
ini.	2	-3149	1397.22	4176.53	SLV 9	2.99	Si
fin.	2	-3024	-1274.04	4176.53	SLV 9	3.28	Si
ini.	2	-3572	-1884.59	4176.53	SLV 15	2.22	Si
fin.	2	-3070	1905.35	4176.53	SLV 15	2.19	Si
ini.	2	-1099	4127.69	4176.53	SLV 2	1.01	Si
fin.	2	-1601	-4276.64	4176.53	SLV 2	0.98	No
ini.	2	-855	3479.52	4176.53	SLV 3	1.2	Si
fin.	2	-1343	-3717.54	4176.53	SLV 3	1.12	Si
ini.	2	-3572	-1884.59	4176.53	SLV 16	2.22	Si
fin.	2	-3070	1905.35	4176.53	SLV 16	2.19	Si
ini.	2	-855	3479.52	4176.53	SLV 4	1.2	Si
fin.	2	-1343	-3717.54	4176.53	SLV 4	1.12	Si
ini.	2	-3149	1397.22	4176.53	SLV 10	2.99	Si
fin.	2	-3024	-1274.04	4176.53	SLV 10	3.28	Si

Verifiche a taglio delle travi in muratura secondo §C8.7.1.3.1 in combinazioni sismiche

Sezione	γM	N	M	V	Vt	Vp	Vt fess. diag.	Vt,lim	Comb.	c.s.	Verifica
ini.	2	-855	3479.52	-8614			2607	1021	SLV 4	0.12	No
fin.	2	-1343	-3717.54	-10146			2802	1106	SLV 4	0.11	No
ini.	2	-3572	-1884.59	5765			3693	1432	SLV 16	0.25	No
fin.	2	-3070	1905.35	4277			3492	1365	SLV 16	0.32	No
ini.	2	-2334	3006.45	-6771			3198	1261	SLV 5	0.19	No
fin.	2	-2505	-2960.91	-8256			3267	1286	SLV 5	0.16	No
ini.	2	-855	3479.52	-8614			2607	1021	SLV 3	0.12	No
fin.	2	-1343	-3717.54	-10146			2802	1106	SLV 3	0.11	No
ini.	2	-1099	4127.69	-10087			2704	1065	SLV 2	0.11	No
fin.	2	-1601	-4276.64	-11603			2905	1149	SLV 2	0.1	No
ini.	2	-1099	4127.69	-10087			2704	1065	SLV 1	0.11	No
fin.	2	-1601	-4276.64	-11603			2905	1149	SLV 1	0.1	No
ini.	2	-1522	845.88	-1864			2873	1136	SLV 7	0.61	No
fin.	2	-1647	-1097.25	-3397			2923	1156	SLV 7	0.34	No
ini.	2	-2334	3006.45	-6771			3198	1261	SLV 6	0.19	No
fin.	2	-2505	-2960.91	-8256			3267	1286	SLV 6	0.16	No
ini.	2	-1522	845.88	-1864			2873	1136	SLV 8	0.61	No
fin.	2	-1647	-1097.25	-3397			2923	1156	SLV 8	0.34	No
ini.	2	-3572	-1884.59	5765			3693	1432	SLV 15	0.25	No
fin.	2	-3070	1905.35	4277			3492	1365	SLV 15	0.32	No

Tabella dei coefficienti di sicurezza minimi

Stato limite	Coeff.s.	Comb.	Verifica
PF_SLV	0.977	SLV 1	No
V_SLV	0.099	SLV 1	No
PF_SLU	1.46	SLU 77	Si
V_SLU	0.183	SLU 77	No

Trave di accoppiamento 127

Verifiche condotte secondo D.M. 17-01-18 (N.T.C.)

Dati geometrici

X ini.	Y ini.	Z ini.inf.	Z ini.sup.	H ini.	X fin.	Y fin.	Z fin.inf.	Z fin.sup	H fin.	Luce	Spessore	R. Trazione
-11.865	1.141	11.05	12.05	1	-12.865	1.141	11.05	12.05	1	1	0.28	30000

Caratteristiche del materiale

(Circolare 7 21-01-19 C8.5.I) Muratura in mattoni pieni e malta di calce LC2_Corti

fb_	fhk	fvk0	fhmedio	τ0	fv0	μ	ϕ	fvk,lim	E	G	FC
120000			172500	9000	20000	0.577	0.767	6500	320000000	128000000	1.2

Verifiche a pressoflessione delle travi in muratura in combinazioni non sismiche

Sezione	γM	N	M	Mu	Comb.	c.s.	Verifica
ini.	3	-2720	-426.65	1420.59	SLU 61	3.33	Si
fin.	3	-2720	447.74	1420.59	SLU 61	3.17	Si
ini.	3	-2613	-429.55	1420.59	SLU 60	3.31	Si
fin.	3	-2613	455.88	1420.59	SLU 60	3.12	Si
ini.	3	-3009	-470.53	1420.59	SLU 81	3.02	Si
fin.	3	-3009	503.91	1420.59	SLU 81	2.82	Si
ini.	3	-3025	-439.41	1420.59	SLU 73	3.23	Si
fin.	3	-3025	467.71	1420.59	SLU 73	3.04	Si
ini.	3	-3286	-381.43	1420.59	SLU 76	3.72	Si
fin.	3	-3286	434.36	1420.59	SLU 76	3.27	Si
ini.	3	-3377	-409.64	1420.59	SLU 84	3.47	Si
fin.	3	-3377	462.41	1420.59	SLU 84	3.07	Si
ini.	3	-3116	-467.62	1420.59	SLU 82	3.04	Si
fin.	3	-3116	495.77	1420.59	SLU 82	2.87	Si
ini.	3	-3270	-412.54	1420.59	SLU 83	3.44	Si
fin.	3	-3270	470.55	1420.59	SLU 83	3.02	Si
ini.	3	-3260	-393.22	1420.59	SLU 75	3.61	Si
fin.	3	-3260	456.79	1420.59	SLU 75	3.11	Si
ini.	3	-3154	-396.12	1420.59	SLU 74	3.59	Si
fin.	3	-3154	464.93	1420.59	SLU 74	3.06	Si

Verifiche a taglio delle travi in muratura secondo §C8.7.1.3.1 in combinazioni non sismiche

Sezione	γM	N	M	V	Vt	Vp	Vt fess. diag.	Vt,lim	Comb.	c.s.	Verifica
ini.	3	-2613	-429.55	1664			2124	791	SLU 60	0.48	No
fin.	3	-2613	455.88	111			2124	791	SLU 60	7.14	Si
ini.	3	-2720	-426.65	1653			2166	803	SLU 61	0.49	No
fin.	3	-2720	447.74	100			2166	803	SLU 61	8.04	Si
ini.	3	-2635	-402.42	1639			2132	793	SLU 39	0.48	No
fin.	3	-2635	428.79	26			2132	793	SLU 39	30.34	Si
ini.	3	-3377	-409.64	1772			2429	872	SLU 84	0.49	No
fin.	3	-3377	462.41	-24			2429	872	SLU 84	36.91	Si
ini.	3	-2742	-399.52	1628			2175	805	SLU 40	0.49	No
fin.	3	-2742	420.65	15			2175	805	SLU 40	53.28	Si
ini.	3	-3009	-470.53	1874			2282	834	SLU 81	0.45	No
fin.	3	-3009	503.91	79			2282	834	SLU 81	10.59	Si
ini.	3	-3116	-467.62	1863			2325	845	SLU 82	0.45	No
fin.	3	-3116	495.77	68			2325	845	SLU 82	12.48	Si
ini.	3	-3025	-439.41	1734			2288	836	SLU 73	0.48	No
fin.	3	-3025	467.71	84			2288	836	SLU 73	9.89	Si
ini.	3	-3270	-412.54	1783			2386	861	SLU 83	0.48	No
fin.	3	-3270	470.55	-13			2386	861	SLU 83	68.41	Si
ini.	3	-3154	-396.12	1688			2340	849	SLU 74	0.5	No
fin.	3	-3154	464.93	38			2340	849	SLU 74	22.11	Si

Verifiche a pressoflessione delle travi in muratura in combinazioni sismiche

Sezione	γM	N	M	Mu	Comb.	c.s.	Verifica
ini.	2	-3395	-1656.36	2130.88	SLV 11	1.29	Si
fin.	2	-3274	1628.14	2130.88	SLV 11	1.31	Si
ini.	2	-2896	-4407.65	2130.88	SLV 15	0.48	No
fin.	2	-2465	4441.52	2130.88	SLV 15	0.48	No
ini.	2	-2896	-4407.65	2130.88	SLV 16	0.48	No
fin.	2	-2465	4441.52	2130.88	SLV 16	0.48	No
ini.	2	-2116	-4327.27	2130.88	SLV 14	0.49	No
fin.	2	-1680	4400.77	2130.88	SLV 14	0.48	No
ini.	2	-2116	-4327.27	2130.88	SLV 13	0.49	No
fin.	2	-1680	4400.77	2130.88	SLV 13	0.48	No
ini.	2	-944	3801.5	2130.88	SLV 2	0.56	No
fin.	2	-1375	-3773.28	2130.88	SLV 2	0.56	No
ini.	2	-3395	-1656.36	2130.88	SLV 12	1.29	Si
fin.	2	-3274	1628.14	2130.88	SLV 12	1.31	Si
ini.	2	-944	3801.5	2130.88	SLV 1	0.56	No
fin.	2	-1375	-3773.28	2130.88	SLV 1	0.56	No
ini.	2	-1724	3721.12	2130.88	SLV 4	0.57	No
fin.	2	-2160	-3732.53	2130.88	SLV 4	0.57	No
ini.	2	-1724	3721.12	2130.88	SLV 3	0.57	No
fin.	2	-2160	-3732.53	2130.88	SLV 3	0.57	No

Verifiche a taglio delle travi in muratura secondo §C8.7.1.3.1 in combinazioni sismiche

Sezione	γM	N	M	V	Vt	Vp	Vt fess. diag.	Vt,lim	Comb.	c.s.	Verifica
ini.	2	-1724	3721.12	-6923			2307	909	SLV 3	0.13	No
fin.	2	-2160	-3732.53	-8059			2481	971	SLV 3	0.12	No
ini.	2	-796	-1388.43	3066			1936	762	SLV 10	0.25	No
fin.	2	-658	1492.31	2308			1881	738	SLV 10	0.32	No
ini.	2	-796	-1388.43	3066			1936	762	SLV 9	0.25	No
fin.	2	-658	1492.31	2308			1881	738	SLV 9	0.32	No
ini.	2	-2116	-4327.27	9251			2464	965	SLV 14	0.1	No
fin.	2	-1680	4400.77	8286			2290	903	SLV 14	0.11	No
ini.	2	-2896	-4407.65	9596			2776	1066	SLV 16	0.11	No

Sezione	γM	N	M	V	Vt	Vp	Vt fess. diag.	Vt,lim	Comb.	c.s.	Verifica
fin.	2	-2465	4441.52	8456			2604	1011	SLV 16	0.12	No
ini.	2	-1724	3721.12	-6923			2307	909	SLV 4	0.13	No
fin.	2	-2160	-3732.53	-8059			2481	971	SLV 4	0.12	No
ini.	2	-944	3801.5	-7268			1995	788	SLV 1	0.11	No
fin.	2	-1375	-3773.28	-8229			2167	857	SLV 1	0.1	No
ini.	2	-2896	-4407.65	9596			2776	1066	SLV 15	0.11	No
fin.	2	-2465	4441.52	8456			2604	1011	SLV 15	0.12	No
ini.	2	-2116	-4327.27	9251			2464	965	SLV 13	0.1	No
fin.	2	-1680	4400.77	8286			2290	903	SLV 13	0.11	No
ini.	2	-944	3801.5	-7268			1995	788	SLV 2	0.11	No
fin.	2	-1375	-3773.28	-8229			2167	857	SLV 2	0.1	No

Tabella dei coefficienti di sicurezza minimi

Stato limite	Coeff.s.	Comb.	Verifica
PF_SLV	0.48	SLV 15	No
V_SLV	0.104	SLV 1	No
PF_SLU	2.819	SLU 81	Si
V_SLU	0.445	SLU 81	No

Trave di accoppiamento 128

Verifiche condotte secondo D.M. 17-01-18 (N.T.C.)

Dati geometrici

X ini.	Y ini.	Z ini.inf.	Z ini.sup.	H ini.	X fin.	Y fin.	Z fin.inf.	Z fin.sup	H fin.	Luce	Spessore	R. Trazione
-4.13	1.141	10.65	12.05	1.4	-4.93	1.141	10.65	12.05	1.4	0.8	0.28	30000

Caratteristiche del materiale

(Circolare 7 21-01-19 C8.5.I) Muratura in mattoni pieni e malta di calce LC2_Corti

fb_	fhk	fvk0	fhmedio	τ0	fv0	μ	ϕ	fvk,lim	E	G	FC
120000			172500	9000	20000	0.577	0.767	6500	320000000	128000000	1.2

Verifiche a pressoflessione delle travi in muratura in combinazioni non sismiche

Sezione	γM	N	M	Mu	Comb.	c.s.	Verifica
ini.	3	-3538	-752.05	2784.35	SLU 83	3.7	Si
fin.	3	-3538	1189.67	2784.35	SLU 83	2.34	Si
ini.	3	-2911	-724.99	2784.35	SLU 35	3.84	Si
fin.	3	-2911	1142.32	2784.35	SLU 35	2.44	Si
ini.	3	-3271	-854.41	2784.35	SLU 80	3.26	Si
fin.	3	-3271	1247.63	2784.35	SLU 80	2.23	Si
ini.	3	-3247	-881.43	2784.35	SLU 79	3.16	Si
fin.	3	-3247	1272.92	2784.35	SLU 79	2.19	Si
ini.	3	-3279	-851.06	2784.35	SLU 77	3.27	Si
fin.	3	-3279	1266.19	2784.35	SLU 77	2.2	Si
ini.	3	-2678	-864.53	2784.35	SLU 69	3.22	Si
fin.	3	-2678	1150.37	2784.35	SLU 69	2.42	Si
ini.	3	-3562	-725.03	2784.35	SLU 84	3.84	Si
fin.	3	-3562	1164.38	2784.35	SLU 84	2.39	Si
ini.	3	-3304	-824.03	2784.35	SLU 78	3.38	Si
fin.	3	-3304	1240.91	2784.35	SLU 78	2.24	Si
ini.	3	-2879	-755.37	2784.35	SLU 37	3.69	Si
fin.	3	-2879	1149.05	2784.35	SLU 37	2.42	Si
ini.	3	-2646	-894.91	2784.35	SLU 71	3.11	Si
fin.	3	-2646	1157.1	2784.35	SLU 71	2.41	Si

Verifiche a taglio delle travi in muratura secondo §C8.7.1.3.1 in combinazioni non sismiche

Sezione	γM	N	M	V	Vt	Vp	Vt fess. diag.	Vt,lim	Comb.	c.s.	Verifica
ini.	3	-2678	-864.53	3496			2581	992	SLU 69	0.28	No
fin.	3	-2678	1150.37	1613			2581	992	SLU 69	0.61	No
ini.	3	-3538	-752.05	3770			2925	1094	SLU 83	0.29	No
fin.	3	-3538	1189.67	1157			2925	1094	SLU 83	0.95	No
ini.	3	-2670	-867.88	3477			2578	991	SLU 72	0.29	No
fin.	3	-2670	1131.81	1594			2578	991	SLU 72	0.62	No
ini.	3	-3279	-851.06	3880			2821	1064	SLU 77	0.27	No
fin.	3	-3279	1266.19	1486			2821	1064	SLU 77	0.72	No
ini.	3	-2725	-834.1	3450			2600	998	SLU 58	0.29	No
fin.	3	-2725	1107.47	1480			2600	998	SLU 58	0.67	No
ini.	3	-3271	-854.41	3861			2818	1063	SLU 80	0.28	No
fin.	3	-3271	1247.63	1467			2818	1063	SLU 80	0.72	No
ini.	3	-3304	-824.03	3814			2831	1067	SLU 78	0.28	No
fin.	3	-3304	1240.91	1421			2831	1067	SLU 78	0.75	No
ini.	3	-2703	-837.51	3431			2591	995	SLU 70	0.29	No
fin.	3	-2703	1125.09	1548			2591	995	SLU 70	0.64	No
ini.	3	-2646	-894.91	3543			2568	988	SLU 71	0.28	No
fin.	3	-2646	1157.1	1660			2568	988	SLU 71	0.6	No
ini.	3	-3247	-881.43	3926			2808	1061	SLU 79	0.27	No
fin.	3	-3247	1272.92	1533			2808	1061	SLU 79	0.69	No

Verifiche a pressoflessione delle travi in muratura in combinazioni sismiche

Sezione	γM	N	M	Mu	Comb.	c.s.	Verifica
ini.	2	-2672	2387.38	4176.53	SLV 1	1.75	Si
fin.	2	-3313	-1883.91	4176.53	SLV 1	2.22	Si
ini.	2	-1616	-3355.33	4176.53	SLV 15	1.24	Si
fin.	2	-975	3248.63	4176.53	SLV 15	1.29	Si
ini.	2	-2672	2387.38	4176.53	SLV 2	1.75	Si
fin.	2	-3313	-1883.91	4176.53	SLV 2	2.22	Si

Sezione	γM	N	M	Mu	Comb.	c.s.	Verifica
ini.	2	-2372	2825.07	4176.53	SLV 4	1.48	Si
fin.	2	-3005	-2445.99	4176.53	SLV 4	1.71	Si
ini.	2	-2531	-2140.5	4176.53	SLV 9	1.95	Si
fin.	2	-2352	2473.37	4176.53	SLV 9	1.69	Si
ini.	2	-1616	-3355.33	4176.53	SLV 16	1.24	Si
fin.	2	-975	3248.63	4176.53	SLV 16	1.29	Si
ini.	2	-1916	-3793.01	4176.53	SLV 13	1.1	Si
fin.	2	-1283	3810.72	4176.53	SLV 13	1.1	Si
ini.	2	-2372	2825.07	4176.53	SLV 3	1.48	Si
fin.	2	-3005	-2445.99	4176.53	SLV 3	1.71	Si
ini.	2	-2531	-2140.5	4176.53	SLV 10	1.95	Si
fin.	2	-2352	2473.37	4176.53	SLV 10	1.69	Si
ini.	2	-1916	-3793.01	4176.53	SLV 14	1.1	Si
fin.	2	-1283	3810.72	4176.53	SLV 14	1.1	Si

Verifiche a taglio delle travi in muratura secondo §C8.7.1.3.1 in combinazioni sismiche

Sezione	γM	N	M	V	Vt	Vp	Vt fess. diag.	Vt,lim	Comb.	c.s.	Verifica
ini.	2	-2531	-2140.5	6523			3277	1290	SLV 9	0.2	No
fin.	2	-2352	2473.37	5133			3205	1264	SLV 9	0.25	No
ini.	2	-2372	2825.07	-6008			3213	1267	SLV 3	0.21	No
fin.	2	-3005	-2445.99	-7544			3466	1356	SLV 3	0.18	No
ini.	2	-2672	2387.38	-4813			3333	1310	SLV 2	0.27	No
fin.	2	-3313	-1883.91	-6282			3590	1398	SLV 2	0.22	No
ini.	2	-2372	2825.07	-6008			3213	1267	SLV 4	0.21	No
fin.	2	-3005	-2445.99	-7544			3466	1356	SLV 4	0.18	No
ini.	2	-1916	-3793.01	10482			3031	1198	SLV 13	0.11	No
fin.	2	-1283	3810.72	9015			2778	1096	SLV 13	0.12	No
ini.	2	-1616	-3355.33	9287			2911	1151	SLV 15	0.12	No
fin.	2	-975	3248.63	7753			2654	1043	SLV 15	0.13	No
ini.	2	-1916	-3793.01	10482			3031	1198	SLV 14	0.11	No
fin.	2	-1283	3810.72	9015			2778	1096	SLV 14	0.12	No
ini.	2	-1616	-3355.33	9287			2911	1151	SLV 16	0.12	No
fin.	2	-975	3248.63	7753			2654	1043	SLV 16	0.13	No
ini.	2	-2531	-2140.5	6523			3277	1290	SLV 10	0.2	No
fin.	2	-2352	2473.37	5133			3205	1264	SLV 10	0.25	No
ini.	2	-2672	2387.38	-4813			3333	1310	SLV 1	0.27	No
fin.	2	-3313	-1883.91	-6282			3590	1398	SLV 1	0.22	No

Tabella dei coefficienti di sicurezza minimi

Stato limite	Coeff.s.	Comb.	Verifica
PF_SLV	1.096	SLV 13	Si
V_SLV	0.114	SLV 13	No
PF_SLU	2.187	SLU 79	Si
V_SLU	0.27	SLU 79	No

Trave di accoppiamento 129

Verifiche condotte secondo D.M. 17-01-18 (N.T.C.)

Dati geometrici

X ini.	Y ini.	Z ini.inf.	Z ini.sup.	H ini.	X fin.	Y fin.	Z fin.inf.	Z fin.sup	H fin.	Luce	Spessore	R. Trazione
-9.94	3.3	10.45	12.05	1.6	-10.74	3.3	10.45	12.05	1.6	0.8	0.14	30000

Caratteristiche del materiale

(Circolare 7 21-01-19 C8.5.I) Muratura in mattoni pieni e malta di calce LC2_Corti

fb_	fhk	fvk0	fhmedio	τ0	fv0	μ	ϕ	fvk,lim	E	G	FC
120000			172500	9000	20000	0.577	0.767	6500	320000000	128000000	1.2

Verifiche a pressoflessione delle travi in muratura in combinazioni non sismiche

Sezione	γM	N	M	Mu	Comb.	c.s.	Verifica
ini.	3	23	91.38	1818.35	SLU 47	19.9	Si
fin.	3	23	-648.4	1818.35	SLU 47	2.8	Si
ini.	3	28	91.26	1818.35	SLU 48	19.93	Si
fin.	3	28	-671.11	1818.35	SLU 48	2.71	Si
ini.	3	23	88.64	1818.35	SLU 51	20.52	Si
fin.	3	23	-743.19	1818.35	SLU 51	2.45	Si
ini.	3	17	78.82	1818.35	SLU 8	23.07	Si
fin.	3	17	-567.73	1818.35	SLU 8	3.2	Si
ini.	3	28	94.04	1818.35	SLU 46	19.34	Si
fin.	3	28	-575.07	1818.35	SLU 46	3.16	Si
ini.	3	23	88.51	1818.35	SLU 50	20.55	Si
fin.	3	23	-746.92	1818.35	SLU 50	2.43	Si
ini.	3	18	78.95	1818.35	SLU 9	23.03	Si
fin.	3	18	-564	1818.35	SLU 9	3.22	Si
ini.	3	28	91.39	1818.35	SLU 49	19.9	Si
fin.	3	28	-667.37	1818.35	SLU 49	2.72	Si
ini.	3	23	93.82	1818.35	SLU 43	19.38	Si
fin.	3	23	-562.31	1818.35	SLU 43	3.23	Si
ini.	3	28	93.91	1818.35	SLU 45	19.36	Si
fin.	3	28	-578.8	1818.35	SLU 45	3.14	Si

Verifiche a taglio delle travi in muratura secondo §C8.7.1.3.1 in combinazioni non sismiche

Sezione	γM	N	M	V	Vt	Vp	Vt fess. diag.	Vt,lim	Comb.	c.s.	Verifica
ini.	3	23	88.51	-715			863	320	SLU 50	0.45	No
fin.	3	23	-746.92	-1407			863	320	SLU 50	0.23	No
ini.	3	29	136.75	-350			863	318	SLU 70	0.91	No

Sezione	γM	N	M	V	Vt	Vp	Vt fess. diag.	Vt,lim	Comb.	c.s.	Verifica
fin.	3	29	-479.97	-1226			863	318	SLU 70	0.26	No
ini.	3	28	93.91	-512			863	318	SLU 45	0.62	No
fin.	3	28	-578.8	-1204			863	318	SLU 45	0.26	No
ini.	3	28	136.62	-355			863	318	SLU 69	0.9	No
fin.	3	28	-483.71	-1230			863	318	SLU 69	0.26	No
ini.	3	23	91.38	-596			863	320	SLU 47	0.54	No
fin.	3	23	-648.4	-1288			863	320	SLU 47	0.25	No
ini.	3	23	133.87	-446			863	320	SLU 71	0.72	No
fin.	3	23	-559.52	-1322			863	320	SLU 71	0.24	No
ini.	3	28	91.26	-624			863	319	SLU 48	0.51	No
fin.	3	28	-671.11	-1316			863	319	SLU 48	0.24	No
ini.	3	28	91.39	-619			863	319	SLU 49	0.51	No
fin.	3	28	-667.37	-1312			863	319	SLU 49	0.24	No
ini.	3	24	134	-441			863	319	SLU 72	0.72	No
fin.	3	24	-555.79	-1317			863	319	SLU 72	0.24	No
ini.	3	23	88.64	-711			863	320	SLU 51	0.45	No
fin.	3	23	-743.19	-1403			863	320	SLU 51	0.23	No

Verifiche a pressoflessione delle travi in muratura in combinazioni sismiche

Sezione	γM	N	M	Mu	Comb.	c.s.	Verifica
ini.	2	711	242.52	2727.53	SLV 15	11.25	Si
fin.	2	867	2741.55	2727.53	SLV 15	0.99	No
ini.	2	617	155.5	2727.53	SLV 13	17.54	Si
fin.	2	849	2937.03	2727.53	SLV 13	0.93	No
ini.	2	-674	-13.13	2727.53	SLV 2	207.74	Si
fin.	2	-830	-3209.43	2727.53	SLV 2	0.85	No
ini.	2	711	242.52	2727.53	SLV 16	11.25	Si
fin.	2	867	2741.55	2727.53	SLV 16	0.99	No
ini.	2	-580	73.88	2727.53	SLV 3	36.92	Si
fin.	2	-813	-3404.9	2727.53	SLV 3	0.8	No
ini.	2	617	155.5	2727.53	SLV 14	17.54	Si
fin.	2	849	2937.03	2727.53	SLV 14	0.93	No
ini.	2	-18	234.42	2727.53	SLV 8	11.64	Si
fin.	2	-204	-1481.7	2727.53	SLV 8	1.84	Si
ini.	2	-18	234.42	2727.53	SLV 7	11.64	Si
fin.	2	-204	-1481.7	2727.53	SLV 7	1.84	Si
ini.	2	-580	73.88	2727.53	SLV 4	36.92	Si
fin.	2	-813	-3404.9	2727.53	SLV 4	0.8	No
ini.	2	-674	-13.13	2727.53	SLV 1	207.74	Si
fin.	2	-830	-3209.43	2727.53	SLV 1	0.85	No

Verifiche a taglio delle travi in muratura secondo §C8.7.1.3.1 in combinazioni sismiche

Sezione	γM	N	M	V	Vt	Vp	Vt fess. diag.	Vt,lim	Comb.	c.s.	Verifica
ini.	2	711	242.52	3837			1294	294	SLV 16	0.08	No
fin.	2	867	2741.55	3036			1294	231	SLV 16	0.08	No
ini.	2	-580	73.88	-4112			1526	600	SLV 3	0.15	No
fin.	2	-813	-3404.9	-4887			1619	640	SLV 3	0.13	No
ini.	2	-18	234.42	-1418			1301	491	SLV 8	0.35	No
fin.	2	-204	-1481.7	-2412			1376	529	SLV 8	0.22	No
ini.	2	711	242.52	3837			1294	294	SLV 15	0.08	No
fin.	2	867	2741.55	3036			1294	231	SLV 15	0.08	No
ini.	2	617	155.5	3913			1294	326	SLV 13	0.08	No
fin.	2	849	2937.03	3290			1294	239	SLV 13	0.07	No
ini.	2	-674	-13.13	-4036			1564	616	SLV 1	0.15	No
fin.	2	-830	-3209.43	-4633			1626	643	SLV 1	0.14	No
ini.	2	-18	234.42	-1418			1301	491	SLV 7	0.35	No
fin.	2	-204	-1481.7	-2412			1376	529	SLV 7	0.22	No
ini.	2	-580	73.88	-4112			1526	600	SLV 4	0.15	No
fin.	2	-813	-3404.9	-4887			1619	640	SLV 4	0.13	No
ini.	2	617	155.5	3913			1294	326	SLV 14	0.08	No
fin.	2	849	2937.03	3290			1294	239	SLV 14	0.07	No
ini.	2	-674	-13.13	-4036			1564	616	SLV 2	0.15	No
fin.	2	-830	-3209.43	-4633			1626	643	SLV 2	0.14	No

Tabella dei coefficienti di sicurezza minimi

Stato limite	Coeff.s.	Comb.	Verifica
PF_SLV	0.801	SLV 3	No
V_SLV	0.073	SLV 13	No
PF_SLU	2.434	SLU 50	Si
V_SLU	0.227	SLU 50	No

Trave di accoppiamento 130

Verifiche condotte secondo D.M. 17-01-18 (N.T.C.)

Dati geometrici

X ini.	Y ini.	Z ini.inf.	Z ini.sup.	H ini.	X fin.	Y fin.	Z fin.inf.	Z fin.sup	H fin.	Luce	Spessore	R. Trazione
-11.003	0	10.65	12.05	1.4	-11.003	1	10.65	12.05	1.4	1	0.28	30000

Caratteristiche del materiale

(Circolare 7 21-01-19 C8.5.I) Muratura in mattoni pieni e malta di calce LC2_Corti

fb_	fhk	fvk0	fhmedio	τ0	fv0	μ	ϕ	fvk,lim	E	G	FC
120000			172500	9000	20000	0.577	0.767	6500	320000000	128000000	1.2

Verifiche a pressoflessione delle travi in muratura in combinazioni non sismiche

Sezione	γM	N	M	Mu	Comb.	c.s.	Verifica

Sezione	γM	N	M	Mu	Comb.	c.s.	Verifica
ini.	3	-70	-3548.7	2784.35	SLU 79	0.78	No
fin.	3	-70	-351.73	2784.35	SLU 79	7.92	Si
ini.	3	-58	-3349.35	2784.35	SLU 71	0.83	No
fin.	3	-58	-329.34	2784.35	SLU 71	8.45	Si
ini.	3	-59	-3378.74	2784.35	SLU 69	0.82	No
fin.	3	-59	-332.69	2784.35	SLU 69	8.37	Si
ini.	3	-71	-3578.1	2784.35	SLU 77	0.78	No
fin.	3	-71	-355.08	2784.35	SLU 77	7.84	Si
ini.	3	-71	-3283.45	2784.35	SLU 78	0.85	No
fin.	3	-71	-320.25	2784.35	SLU 78	8.69	Si
ini.	3	-65	-3211.63	2784.35	SLU 35	0.87	No
fin.	3	-65	-326.13	2784.35	SLU 35	8.54	Si
ini.	3	-64	-3182.24	2784.35	SLU 37	0.87	No
fin.	3	-64	-322.78	2784.35	SLU 37	8.63	Si
ini.	3	-68	-3247.29	2784.35	SLU 74	0.86	No
fin.	3	-68	-316.67	2784.35	SLU 74	8.79	Si
ini.	3	-72	-3303.34	2784.35	SLU 83	0.84	No
fin.	3	-72	-322.91	2784.35	SLU 83	8.62	Si
ini.	3	-70	-3254.06	2784.35	SLU 80	0.86	No
fin.	3	-70	-316.9	2784.35	SLU 80	8.79	Si

Verifiche a taglio delle travi in muratura secondo §C8.7.1.3.1 in combinazioni non sismiche

Sezione	γM	N	M	V	Vt	Vp	Vt fess. diag.	Vt,lim	Comb.	c.s.	Verifica
ini.	3	-68	-3247.29	3422			1537	583	SLU 74	0.17	No
fin.	3	-68	-316.67	2474			1537	583	SLU 74	0.24	No
ini.	3	-58	-3084.1	3278			1533	581	SLU 70	0.18	No
fin.	3	-58	-297.85	2330			1533	581	SLU 70	0.25	No
ini.	3	-71	-3578.1	3714			1538	583	SLU 77	0.16	No
fin.	3	-71	-355.08	2766			1538	583	SLU 77	0.21	No
ini.	3	-70	-3254.06	3429			1538	583	SLU 80	0.17	No
fin.	3	-70	-316.9	2481			1538	583	SLU 80	0.24	No
ini.	3	-60	-3064.88	3260			1534	581	SLU 56	0.18	No
fin.	3	-60	-295.79	2313			1534	581	SLU 56	0.25	No
ini.	3	-71	-3283.45	3455			1538	583	SLU 78	0.17	No
fin.	3	-71	-320.25	2507			1538	583	SLU 78	0.23	No
ini.	3	-72	-3303.34	3472			1538	584	SLU 83	0.17	No
fin.	3	-72	-322.91	2524			1538	584	SLU 83	0.23	No
ini.	3	-58	-3349.35	3511			1533	581	SLU 71	0.17	No
fin.	3	-58	-329.34	2563			1533	581	SLU 71	0.23	No
ini.	3	-59	-3378.74	3537			1533	581	SLU 69	0.16	No
fin.	3	-59	-332.69	2589			1533	581	SLU 69	0.22	No
ini.	3	-70	-3548.7	3688			1538	583	SLU 79	0.16	No
fin.	3	-70	-351.73	2740			1538	583	SLU 79	0.21	No

Verifiche a pressoflessione delle travi in muratura in combinazioni sismiche

Sezione	γM	N	M	Mu	Comb.	c.s.	Verifica
ini.	2	1462	5511.3	4176.53	SLV 7	0.76	No
fin.	2	1630	443.33	4176.53	SLV 7	9.42	Si
ini.	2	-1371	-8553.22	4176.53	SLV 6	0.49	No
fin.	2	-1452	-740.05	4176.53	SLV 6	5.64	Si
ini.	2	1289	4529.9	4176.53	SLV 11	0.92	No
fin.	2	1370	364.85	4176.53	SLV 11	11.45	Si
ini.	2	-753	-5757	4176.53	SLV 13	0.73	No
fin.	2	-935	-495.91	4176.53	SLV 13	8.42	Si
ini.	2	-1543	-9534.62	4176.53	SLV 9	0.44	No
fin.	2	-1711	-818.54	4176.53	SLV 9	5.1	Si
ini.	2	1289	4529.9	4176.53	SLV 12	0.92	No
fin.	2	1370	364.85	4176.53	SLV 12	11.45	Si
ini.	2	-753	-5757	4176.53	SLV 14	0.73	No
fin.	2	-935	-495.91	4176.53	SLV 14	8.42	Si
ini.	2	-1371	-8553.22	4176.53	SLV 5	0.49	No
fin.	2	-1452	-740.05	4176.53	SLV 5	5.64	Si
ini.	2	1462	5511.3	4176.53	SLV 8	0.76	No
fin.	2	1630	443.33	4176.53	SLV 8	9.42	Si
ini.	2	-1543	-9534.62	4176.53	SLV 10	0.44	No
fin.	2	-1711	-818.54	4176.53	SLV 10	5.1	Si

Verifiche a taglio delle travi in muratura secondo §C8.7.1.3.1 in combinazioni sismiche

Sezione	γM	N	M	V	Vt	Vp	Vt fess. diag.	Vt,lim	Comb.	c.s.	Verifica
ini.	2	1289	4529.9	-3682			2264	498	SLV 12	0.14	No
fin.	2	1370	364.85	-4613			2264	467	SLV 12	0.1	No
ini.	2	-753	-5757	5598			2566	1003	SLV 13	0.18	No
fin.	2	-935	-495.91	4765			2639	1036	SLV 13	0.22	No
ini.	2	-1543	-9534.62	8984			2882	1139	SLV 9	0.13	No
fin.	2	-1711	-818.54	8366			2949	1166	SLV 9	0.14	No
ini.	2	-753	-5757	5598			2566	1003	SLV 14	0.18	No
fin.	2	-935	-495.91	4765			2639	1036	SLV 14	0.22	No
ini.	2	-1371	-8553.22	8086			2813	1111	SLV 5	0.14	No
fin.	2	-1452	-740.05	7558			2845	1124	SLV 5	0.15	No
ini.	2	-1543	-9534.62	8984			2882	1139	SLV 10	0.13	No
fin.	2	-1711	-818.54	8366			2949	1166	SLV 10	0.14	No
ini.	2	1289	4529.9	-3682			2264	498	SLV 11	0.14	No
fin.	2	1370	364.85	-4613			2264	467	SLV 11	0.1	No
ini.	2	-1371	-8553.22	8086			2813	1111	SLV 6	0.14	No
fin.	2	-1452	-740.05	7558			2845	1124	SLV 6	0.15	No
ini.	2	1462	5511.3	-4580			2264	430	SLV 7	0.09	No
fin.	2	1630	443.33	-5420			2264	350	SLV 7	0.06	No
ini.	2	1462	5511.3	-4580			2264	430	SLV 8	0.09	No
fin.	2	1630	443.33	-5420			2264	350	SLV 8	0.06	No

Tabella dei coefficienti di sicurezza minimi

Stato limite	Coeff.s.	Comb.	Verifica
PF_SLV	0.438	SLV 9	No
V_SLV	0.065	SLV 7	No
PF_SLU	0.778	SLU 77	No
V_SLU	0.157	SLU 77	No

Trave di accoppiamento 131

Verifiche condotte secondo D.M. 17-01-18 (N.T.C.)

Dati geometrici

X ini.	Y ini.	Z ini.inf.	Z ini.sup.	H ini.	X fin.	Y fin.	Z fin.inf.	Z fin.sup	H fin.	Luce	Spessore	R. Trazione
-9.72	1.426	10.65	12.05	1.4	-9.72	2.226	10.65	12.05	1.4	0.8	0.14	30000

Caratteristiche del materiale

(Circolare 7 21-01-19 C8.5.I) Muratura in mattoni pieni e malta di calce LC2_Corti

fb_	fhk	fvk0	fhmedio	τ0	fv0	μ	ϕ	fvk,lim	E	G	FC
120000			172500	9000	20000	0.577	0.767	6500	320000000	128000000	1.2

Verifiche a pressoflessione delle travi in muratura in combinazioni non sismiche

Sezione	γM	N	M	Mu	Comb.	c.s.	Verifica
ini.	3	-86	145.28	1392.18	SLU 78	9.58	Si
fin.	3	-86	-2545.79	1392.18	SLU 78	0.55	No
ini.	3	-84	143.45	1392.18	SLU 80	9.7	Si
fin.	3	-84	-2546.01	1392.18	SLU 80	0.55	No
ini.	3	-73	141.23	1392.18	SLU 84	9.86	Si
fin.	3	-73	-2477.08	1392.18	SLU 84	0.56	No
ini.	3	-86	144.07	1392.18	SLU 79	9.66	Si
fin.	3	-86	-2550.46	1392.18	SLU 79	0.55	No
ini.	3	-73	139.85	1392.18	SLU 75	9.95	Si
fin.	3	-73	-2378.49	1392.18	SLU 75	0.59	No
ini.	3	-75	140.47	1392.18	SLU 74	9.91	Si
fin.	3	-75	-2382.95	1392.18	SLU 74	0.58	No
ini.	3	-88	145.9	1392.18	SLU 77	9.54	Si
fin.	3	-88	-2550.25	1392.18	SLU 77	0.55	No
ini.	3	-69	137.61	1392.18	SLU 76	10.12	Si
fin.	3	-69	-2375.74	1392.18	SLU 76	0.59	No
ini.	3	-80	136.59	1392.18	SLU 71	10.19	Si
fin.	3	-80	-2320.93	1392.18	SLU 71	0.6	No
ini.	3	-76	141.85	1392.18	SLU 83	9.81	Si
fin.	3	-76	-2481.53	1392.18	SLU 83	0.56	No

Verifiche a taglio delle travi in muratura secondo §C8.7.1.3.1 in combinazioni non sismiche

Sezione	γM	N	M	V	Vt	Vp	Vt fess. diag.	Vt,lim	Comb.	c.s.	Verifica
ini.	3	-73	141.23	-3084			784	300	SLU 84	0.1	No
fin.	3	-73	-2477.08	-3476			784	300	SLU 84	0.09	No
ini.	3	-84	143.45	-3173			788	302	SLU 80	0.1	No
fin.	3	-84	-2546.01	-3565			788	302	SLU 80	0.08	No
ini.	3	-69	137.61	-2953			782	299	SLU 76	0.1	No
fin.	3	-69	-2375.74	-3345			782	299	SLU 76	0.09	No
ini.	3	-73	139.85	-2959			784	299	SLU 75	0.1	No
fin.	3	-73	-2378.49	-3351			784	299	SLU 75	0.09	No
ini.	3	-75	140.47	-2966			785	300	SLU 74	0.1	No
fin.	3	-75	-2382.95	-3357			785	300	SLU 74	0.09	No
ini.	3	-60	135.8	-2868			779	297	SLU 82	0.1	No
fin.	3	-60	-2309.77	-3260			779	297	SLU 82	0.09	No
ini.	3	-88	145.9	-3182			790	303	SLU 77	0.1	No
fin.	3	-88	-2550.25	-3573			790	303	SLU 77	0.08	No
ini.	3	-86	144.07	-3180			789	302	SLU 79	0.1	No
fin.	3	-86	-2550.46	-3571			789	302	SLU 79	0.08	No
ini.	3	-86	145.28	-3175			789	302	SLU 78	0.1	No
fin.	3	-86	-2545.79	-3567			789	302	SLU 78	0.08	No
ini.	3	-76	141.85	-3091			785	300	SLU 83	0.1	No
fin.	3	-76	-2481.53	-3482			785	300	SLU 83	0.09	No

Verifiche a pressoflessione delle travi in muratura in combinazioni sismiche

Sezione	γM	N	M	Mu	Comb.	c.s.	Verifica
ini.	2	-1661	900.94	2088.26	SLV 11	2.32	Si
fin.	2	-1927	-4819.74	2088.26	SLV 11	0.43	No
ini.	2	-1621	937.43	2088.26	SLV 7	2.23	Si
fin.	2	-1922	-5711.66	2088.26	SLV 7	0.37	No
ini.	2	504	-89.47	2088.26	SLV 2	23.34	Si
fin.	2	532	-1911.37	2088.26	SLV 2	1.09	Si
ini.	2	-1621	937.43	2088.26	SLV 8	2.23	Si
fin.	2	-1922	-5711.66	2088.26	SLV 8	0.37	No
ini.	2	-455	404.14	2088.26	SLV 4	5.17	Si
fin.	2	-598	-4145.61	2088.26	SLV 4	0.5	No
ini.	2	504	-89.47	2088.26	SLV 1	23.34	Si
fin.	2	532	-1911.37	2088.26	SLV 1	1.09	Si
ini.	2	-1661	900.94	2088.26	SLV 12	2.32	Si
fin.	2	-1927	-4819.74	2088.26	SLV 12	0.43	No
ini.	2	-455	404.14	2088.26	SLV 3	5.17	Si
fin.	2	-598	-4145.61	2088.26	SLV 3	0.5	No
ini.	2	1538	-744.41	2088.26	SLV 9	2.81	Si
fin.	2	1839	2627.74	2088.26	SLV 9	0.79	No
ini.	2	1538	-744.41	2088.26	SLV 10	2.81	Si

Sezione	γM	N	M	Mu	Comb.	c.s.	Verifica
fin.	2	1839	2627.74	2088.26	SLV 10	0.79	No

Verifiche a taglio delle travi in muratura secondo §C8.7.1.3.1 in combinazioni sismiche

Sezione	γM	N	M	V	Vt	Vp	Vt fess. diag.	Vt,lim	Comb.	c.s.	Verifica
ini.	2	1538	-744.41	3964			1132	0	SLV 9	0	No
fin.	2	1839	2627.74	3519			1132	0	SLV 9	0	No
ini.	2	-1621	937.43	-7775			1781	694	SLV 8	0.09	No
fin.	2	-1922	-5711.66	-7922			1901	733	SLV 8	0.09	No
ini.	2	1538	-744.41	3964			1132	0	SLV 10	0	No
fin.	2	1839	2627.74	3519			1132	0	SLV 10	0	No
ini.	2	-1621	937.43	-7775			1781	694	SLV 7	0.09	No
fin.	2	-1922	-5711.66	-7922			1901	733	SLV 7	0.09	No
ini.	2	-455	404.14	-5355			1314	516	SLV 4	0.1	No
fin.	2	-598	-4145.61	-5557			1371	541	SLV 4	0.1	No
ini.	2	1578	-707.92	2851			1132	0	SLV 6	0	No
fin.	2	1844	1735.82	2438			1132	0	SLV 6	0	No
ini.	2	1578	-707.92	2851			1132	0	SLV 5	0	No
fin.	2	1844	1735.82	2438			1132	0	SLV 5	0	No
ini.	2	-455	404.14	-5355			1314	516	SLV 3	0.1	No
fin.	2	-598	-4145.61	-5557			1371	541	SLV 3	0.1	No
ini.	2	-1661	900.94	-6661			1796	699	SLV 11	0.1	No
fin.	2	-1927	-4819.74	-6842			1903	734	SLV 11	0.11	No
ini.	2	-1661	900.94	-6661			1796	699	SLV 12	0.1	No
fin.	2	-1927	-4819.74	-6842			1903	734	SLV 12	0.11	No

Tabella dei coefficienti di sicurezza minimi

Stato limite	Coeff.s.	Comb.	Verifica
PF_SLV	0.366	SLV 7	No
V_SLV	0	SLV 5	No
PF_SLU	0.546	SLU 79	No
V_SLU	0.085	SLU 80	No

Trave di accoppiamento 132

Verifiche condotte secondo D.M. 17-01-18 (N.T.C.)

Dati geometrici

X ini.	Y ini.	Z ini.inf.	Z ini.sup.	H ini.	X fin.	Y fin.	Z fin.inf.	Z fin.sup	H fin.	Luce	Spessore	R. Trazione
-9.867	-4.697	11.66	12.05	0.39	-8.027	-4.697	11.66	12.05	0.39	1.84	0.3	30000

Caratteristiche del materiale

(Circolare 7 21-01-19 C8.5.I) Muratura in mattoni pieni e malta di calce LC2_Corti

fb_	fhk	fvk0	fhmedio	τ0	fv0	μ	ϕ	fvk,lim	E	G	FC
120000			172500	9000	20000	0.577	0.767	6500	320000000	128000000	1.2

Verifiche a pressoflessione delle travi in muratura in combinazioni non sismiche

Sezione	γM	N	M	Mu	Comb.	c.s.	Verifica
ini.	3	983	-441.29	231.51	SLU 84	0.52	No
fin.	3	-514	104.11	231.51	SLU 84	2.22	Si
ini.	3	979	-454.56	231.51	SLU 76	0.51	No
fin.	3	-618	131.7	231.51	SLU 76	1.76	Si
ini.	3	951	-430.76	231.51	SLU 82	0.54	No
fin.	3	-510	98.07	231.51	SLU 82	2.36	Si
ini.	3	947	-444.03	231.51	SLU 73	0.52	No
fin.	3	-613	125.66	231.51	SLU 73	1.84	Si
ini.	3	872	-410.02	231.51	SLU 34	0.56	No
fin.	3	-568	118.12	231.51	SLU 34	1.96	Si
ini.	3	966	-429.84	231.51	SLU 80	0.54	No
fin.	3	-506	111.7	231.51	SLU 80	2.07	Si
ini.	3	864	-403.27	231.51	SLU 68	0.57	No
fin.	3	-589	135.32	231.51	SLU 68	1.71	Si
ini.	3	960	-427.52	231.51	SLU 78	0.54	No
fin.	3	-506	110.66	231.51	SLU 78	2.09	Si
ini.	3	862	-402.48	231.51	SLU 55	0.58	No
fin.	3	-581	129.22	231.51	SLU 55	1.79	Si
ini.	3	928	-416.99	231.51	SLU 75	0.56	No
fin.	3	-502	104.62	231.51	SLU 75	2.21	Si

Verifiche a taglio delle travi in muratura secondo §C8.7.1.3.1 in combinazioni non sismiche

Sezione	γM	N	M	V	Vt	Vp	Vt fess. diag.	Vt,lim	Comb.	c.s.	Verifica
ini.	3	742	-312.04	330			300	0	SLU 53	0	No
fin.	3	-292	63.08	-108			378	149	SLU 53	1.39	Si
ini.	3	848	-377.76	358			300	0	SLU 59	0	No
fin.	3	-469	109.23	-36			426	168	SLU 59	4.68	Si
ini.	3	765	-325.81	390			300	0	SLU 60	0	No
fin.	3	-300	56.54	-144			380	150	SLU 60	1.04	Si
ini.	3	780	-324.88	314			300	0	SLU 58	0	No
fin.	3	-296	70.17	-87			379	150	SLU 58	1.73	Si
ini.	3	842	-375.44	358			300	0	SLU 57	0	No
fin.	3	-469	108.18	-39			426	168	SLU 57	4.27	Si
ini.	3	774	-322.56	315			300	0	SLU 56	0	No
fin.	3	-296	69.12	-90			379	150	SLU 56	1.66	Si
ini.	3	834	-378.68	434			300	0	SLU 61	0	No
fin.	3	-473	95.59	-93			427	168	SLU 61	1.81	Si
ini.	3	810	-364.91	374			300	0	SLU 54	0	No
fin.	3	-465	102.14	-57			424	167	SLU 54	2.96	Si

Sezione	γM	N	M	V	Vt	Vp	Vt fess. diag.	Vt,lim	Comb.	c.s.	Verifica
ini.	3	493	-207.99	209			300	0	SLU 1	0	No
fin.	3	-209	48.12	-62			356	140	SLU 1	2.28	Si
ini.	3	862	-402.48	403			300	0	SLU 55	0	No
fin.	3	-581	129.22	-19			455	178	SLU 55	9.29	Si

Verifiche a pressoflessione delle travi in muratura in combinazioni sismiche

Sezione	γM	N	M	Mu	Comb.	c.s.	Verifica
ini.	2	1230	-826.82	347.26	SLV 11	0.42	No
fin.	2	-2348	515.92	347.26	SLV 11	0.67	No
ini.	2	-48	489.87	347.26	SLV 9	0.71	No
fin.	2	2342	-493.73	347.26	SLV 9	0.7	No
ini.	2	-111	351.77	347.26	SLV 5	0.99	No
fin.	2	1893	-420.34	347.26	SLV 5	0.83	No
ini.	2	647	-665.19	347.26	SLV 3	0.52	No
fin.	2	-1679	321.55	347.26	SLV 3	1.08	Si
ini.	2	1230	-826.82	347.26	SLV 12	0.42	No
fin.	2	-2348	515.92	347.26	SLV 12	0.67	No
ini.	2	-111	351.77	347.26	SLV 6	0.99	No
fin.	2	1893	-420.34	347.26	SLV 6	0.83	No
ini.	2	-48	489.87	347.26	SLV 10	0.71	No
fin.	2	2342	-493.73	347.26	SLV 10	0.7	No
ini.	2	647	-665.19	347.26	SLV 4	0.52	No
fin.	2	-1679	321.55	347.26	SLV 4	1.08	Si
ini.	2	1167	-964.92	347.26	SLV 7	0.36	No
fin.	2	-2797	589.31	347.26	SLV 7	0.59	No
ini.	2	1167	-964.92	347.26	SLV 8	0.36	No
fin.	2	-2797	589.31	347.26	SLV 8	0.59	No

Verifiche a taglio delle travi in muratura secondo §C8.7.1.3.1 in combinazioni sismiche

Sezione	γM	N	M	V	Vt	Vp	Vt fess. diag.	Vt,lim	Comb.	c.s.	Verifica
ini.	2	1167	-964.92	728			451	0	SLV 8	0	No
fin.	2	-2797	589.31	719			1196	408	SLV 8	0.57	No
ini.	2	-48	489.87	-203			463	176	SLV 10	0.87	No
fin.	2	2342	-493.73	-892			451	0	SLV 10	0	No
ini.	2	647	-665.19	561			451	0	SLV 4	0	No
fin.	2	-1679	321.55	557			898	334	SLV 4	0.6	No
ini.	2	1230	-826.82	623			451	0	SLV 11	0	No
fin.	2	-2348	515.92	455			1077	380	SLV 11	0.83	No
ini.	2	-111	351.77	-98			480	185	SLV 6	1.88	Si
fin.	2	1893	-420.34	-627			451	0	SLV 6	0	No
ini.	2	-48	489.87	-203			463	176	SLV 9	0.87	No
fin.	2	2342	-493.73	-892			451	0	SLV 9	0	No
ini.	2	647	-665.19	561			451	0	SLV 3	0	No
fin.	2	-1679	321.55	557			898	334	SLV 3	0.6	No
ini.	2	-111	351.77	-98			480	185	SLV 5	1.88	Si
fin.	2	1893	-420.34	-627			451	0	SLV 5	0	No
ini.	2	1167	-964.92	728			451	0	SLV 7	0	No
fin.	2	-2797	589.31	719			1196	408	SLV 7	0.57	No
ini.	2	1230	-826.82	623			451	0	SLV 12	0	No
fin.	2	-2348	515.92	455			1077	380	SLV 12	0.83	No

Tabella dei coefficienti di sicurezza minimi

Stato limite	Coeff.s.	Comb.	Verifica
PF_SLV	0.36	SLV 7	No
V_SLV	0	SLV 3	No
PF_SLU	0.509	SLU 76	No
V_SLU	0	SLU 1	No

Trave di accoppiamento 133

Verifiche condotte secondo D.M. 17-01-18 (N.T.C.)

Dati geometrici

X ini.	Y ini.	Z ini.inf.	Z ini.sup.	H ini.	X fin.	Y fin.	Z fin.inf.	Z fin.sup	H fin.	Luce	Spessore	R. Trazione
-8.548	-3.169	10.65	12.05	1.4	-9.448	-3.169	10.65	12.05	1.4	0.9	0.28	30000

Caratteristiche del materiale

(Circolare 7 21-01-19 C8.5.I) Muratura in mattoni pieni e malta di calce LC2_Corti

fb_	fhk	fvk0	fhmedio	τ0	fv0	μ	ϕ	fvk,lim	E	G	FC
120000			172500	9000	20000	0.577	0.767	6500	320000000	128000000	1.2

Verifiche a pressoflessione delle travi in muratura in combinazioni non sismiche

Sezione	γM	N	M	Mu	Comb.	c.s.	Verifica
ini.	3	-392	1265.01	2784.35	SLU 75	2.2	Si
fin.	3	-392	-1641.23	2784.35	SLU 75	1.7	Si
ini.	3	-457	1389.87	2784.35	SLU 82	2	Si
fin.	3	-457	-1746.64	2784.35	SLU 82	1.59	Si
ini.	3	-427	1312.07	2784.35	SLU 84	2.12	Si
fin.	3	-427	-1673.24	2784.35	SLU 84	1.66	Si
ini.	3	-323	1212.28	2784.35	SLU 77	2.3	Si
fin.	3	-323	-1564.12	2784.35	SLU 77	1.78	Si
ini.	3	-387	1337.15	2784.35	SLU 83	2.08	Si
fin.	3	-387	-1669.53	2784.35	SLU 83	1.67	Si
ini.	3	-353	1290.09	2784.35	SLU 74	2.16	Si
fin.	3	-353	-1637.53	2784.35	SLU 74	1.7	Si
ini.	3	-418	1414.95	2784.35	SLU 81	1.97	Si

Sezione	γM	N	M	Mu	Comb.	c.s.	Verifica
fin.	3	-418	-1742.94	2784.35	SLU 81	1.6	Si
ini.	3	-432	1205.47	2784.35	SLU 76	2.31	Si
fin.	3	-432	-1590.27	2784.35	SLU 76	1.75	Si
ini.	3	-362	1187.2	2784.35	SLU 78	2.35	Si
fin.	3	-362	-1567.83	2784.35	SLU 78	1.78	Si
ini.	3	-462	1283.28	2784.35	SLU 73	2.17	Si
fin.	3	-462	-1663.68	2784.35	SLU 73	1.67	Si

Verifiche a taglio delle travi in muratura secondo §C8.7.1.3.1 in combinazioni non sismiche

Sezione	γM	N	M	V	Vt	Vp	Vt fess. diag.	Vt,lim	Comb.	c.s.	Verifica
ini.	3	-427	1312.07	-2422			1680	654	SLU 84	0.27	No
fin.	3	-427	-1673.24	-4209			1680	654	SLU 84	0.16	No
ini.	3	-418	1414.95	-2614			1677	653	SLU 81	0.25	No
fin.	3	-418	-1742.94	-4400			1677	653	SLU 81	0.15	No
ini.	3	-323	1212.28	-2249			1639	634	SLU 77	0.28	No
fin.	3	-323	-1564.12	-3917			1639	634	SLU 77	0.16	No
ini.	3	-353	1290.09	-2417			1651	640	SLU 74	0.26	No
fin.	3	-353	-1637.53	-4085			1651	640	SLU 74	0.16	No
ini.	3	-432	1205.47	-2271			1682	655	SLU 76	0.29	No
fin.	3	-432	-1590.27	-3939			1682	655	SLU 76	0.17	No
ini.	3	-392	1265.01	-2393			1667	648	SLU 75	0.27	No
fin.	3	-392	-1641.23	-4062			1667	648	SLU 75	0.16	No
ini.	3	-387	1337.15	-2446			1665	647	SLU 83	0.26	No
fin.	3	-387	-1669.53	-4232			1665	647	SLU 83	0.15	No
ini.	3	-457	1389.87	-2590			1692	660	SLU 82	0.25	No
fin.	3	-457	-1746.64	-4377			1692	660	SLU 82	0.15	No
ini.	3	-362	1187.2	-2225			1655	642	SLU 78	0.29	No
fin.	3	-362	-1567.83	-3894			1655	642	SLU 78	0.16	No
ini.	3	-462	1283.28	-2439			1694	661	SLU 73	0.27	No
fin.	3	-462	-1663.68	-4107			1694	661	SLU 73	0.16	No

Verifiche a pressoflessione delle travi in muratura in combinazioni sismiche

Sezione	γM	N	M	Mu	Comb.	c.s.	Verifica
ini.	2	-1328	-2053.29	4176.53	SLV 16	2.03	Si
fin.	2	-917	2094.76	4176.53	SLV 16	1.99	Si
ini.	2	-1328	-2053.29	4176.53	SLV 15	2.03	Si
fin.	2	-917	2094.76	4176.53	SLV 15	1.99	Si
ini.	2	-863	2958.83	4176.53	SLV 5	1.41	Si
fin.	2	-868	-3452.69	4176.53	SLV 5	1.21	Si
ini.	2	-1681	1439.78	4176.53	SLV 10	2.9	Si
fin.	2	-1416	-1783.83	4176.53	SLV 10	2.34	Si
ini.	2	1399	3010.19	4176.53	SLV 3	1.39	Si
fin.	2	909	-3468.09	4176.53	SLV 3	1.2	Si
ini.	2	-863	2958.83	4176.53	SLV 6	1.41	Si
fin.	2	-868	-3452.69	4176.53	SLV 6	1.21	Si
ini.	2	1399	3010.19	4176.53	SLV 4	1.39	Si
fin.	2	909	-3468.09	4176.53	SLV 4	1.2	Si
ini.	2	795	3804.43	4176.53	SLV 1	1.1	Si
fin.	2	384	-4359.59	4176.53	SLV 1	0.96	No
ini.	2	795	3804.43	4176.53	SLV 2	1.1	Si
fin.	2	384	-4359.59	4176.53	SLV 2	0.96	No
ini.	2	-1681	1439.78	4176.53	SLV 9	2.9	Si
fin.	2	-1416	-1783.83	4176.53	SLV 9	2.34	Si

Verifiche a taglio delle travi in muratura secondo §C8.7.1.3.1 in combinazioni sismiche

Sezione	γM	N	M	V	Vt	Vp	Vt fess. diag.	Vt,lim	Comb.	c.s.	Verifica
ini.	2	795	3804.43	-8859			2264	657	SLV 1	0.07	No
fin.	2	384	-4359.59	-9640			2264	764	SLV 1	0.08	No
ini.	2	1399	3010.19	-6735			2264	456	SLV 4	0.07	No
fin.	2	909	-3468.09	-7966			2264	624	SLV 4	0.08	No
ini.	2	-1328	-2053.29	5498			2796	1104	SLV 15	0.2	No
fin.	2	-917	2094.76	4081			2631	1032	SLV 15	0.25	No
ini.	2	-1328	-2053.29	5498			2796	1104	SLV 16	0.2	No
fin.	2	-917	2094.76	4081			2631	1032	SLV 16	0.25	No
ini.	2	-863	2958.83	-7055			2610	1023	SLV 6	0.14	No
fin.	2	-868	-3452.69	-7376			2612	1024	SLV 6	0.14	No
ini.	2	-863	2958.83	-7055			2610	1023	SLV 5	0.14	No
fin.	2	-868	-3452.69	-7376			2612	1024	SLV 5	0.14	No
ini.	2	1399	3010.19	-6735			2264	456	SLV 3	0.07	No
fin.	2	909	-3468.09	-7966			2264	624	SLV 3	0.08	No
ini.	2	330	-1207.69	3695			2264	777	SLV 11	0.21	No
fin.	2	335	1187.85	1817			2264	776	SLV 11	0.43	No
ini.	2	795	3804.43	-8859			2264	657	SLV 2	0.07	No
fin.	2	384	-4359.59	-9640			2264	764	SLV 2	0.08	No
ini.	2	330	-1207.69	3695			2264	777	SLV 12	0.21	No
fin.	2	335	1187.85	1817			2264	776	SLV 12	0.43	No

Tabella dei coefficienti di sicurezza minimi

Stato limite	Coeff.s.	Comb.	Verifica
PF_SLV	0.958	SLV 1	No
V_SLV	0.068	SLV 3	No
PF_SLU	1.594	SLU 82	Si
V_SLU	0.148	SLU 81	No

Trave di accoppiamento 134

Verifiche condotte secondo D.M. 17-01-18 (N.T.C.)

Dati geometrici

X ini.	Y ini.	Z ini.inf.	Z ini.sup.	H ini.	X fin.	Y fin.	Z fin.inf.	Z fin.sup	H fin.	Luce	Spessore	R. Trazione
-7.763	-4.403	11.66	12.05	0.39	-7.763	-3.313	11.66	12.05	0.39	1.09	0.28	30000

Caratteristiche del materiale

(Circolare 7 21-01-19 C8.5.I) Muratura in mattoni pieni e malta di calce LC2_Corti

fb_	fhk	fvk0	fhmedio	τ0	fv0	μ	ϕ	fvk,lim	E	G	FC
120000			172500	9000	20000	0.577	0.767	6500	320000000	128000000	1.2

Verifiche a pressoflessione delle travi in muratura in combinazioni non sismiche

Sezione	γM	N	M	Mu	Comb.	c.s.	Verifica
ini.	3	118	-348.13	216.07	SLU 68	0.62	No
fin.	3	109	18.09	216.07	SLU 68	11.95	Si
ini.	3	122	-346.98	216.07	SLU 10	0.62	No
fin.	3	118	19.98	216.07	SLU 10	10.81	Si
ini.	3	120	-355.77	216.07	SLU 55	0.61	No
fin.	3	111	19.37	216.07	SLU 55	11.16	Si
ini.	3	123	-367.71	216.07	SLU 52	0.59	No
fin.	3	114	21.59	216.07	SLU 52	10.01	Si
ini.	3	124	-361.69	216.07	SLU 31	0.6	No
fin.	3	118	20.04	216.07	SLU 31	10.78	Si
ini.	3	119	-345.36	216.07	SLU 44	0.63	No
fin.	3	111	20.26	216.07	SLU 44	10.67	Si
ini.	3	121	-349.75	216.07	SLU 34	0.62	No
fin.	3	116	17.82	216.07	SLU 34	12.13	Si
ini.	3	122	-370.48	216.07	SLU 76	0.58	No
fin.	3	112	19.43	216.07	SLU 76	11.12	Si
ini.	3	125	-382.42	216.07	SLU 73	0.57	No
fin.	3	114	21.65	216.07	SLU 73	9.98	Si
ini.	3	121	-360.07	216.07	SLU 65	0.6	No
fin.	3	112	20.31	216.07	SLU 65	10.64	Si

Verifiche a taglio delle travi in muratura secondo §C8.7.1.3.1 in combinazioni non sismiche

Sezione	γM	N	M	V	Vt	Vp	Vt fess. diag.	Vt,lim	Comb.	c.s.	Verifica
ini.	3	121	-360.07	480			280	86	SLU 65	0.18	No
fin.	3	112	20.31	262			280	88	SLU 65	0.34	No
ini.	3	124	-361.69	458			280	86	SLU 31	0.19	No
fin.	3	118	20.04	296			280	87	SLU 31	0.29	No
ini.	3	119	-345.36	464			280	87	SLU 44	0.19	No
fin.	3	111	20.26	246			280	88	SLU 44	0.36	No
ini.	3	122	-370.48	490			280	86	SLU 76	0.18	No
fin.	3	112	19.43	276			280	88	SLU 76	0.32	No
ini.	3	116	-333.42	450			280	87	SLU 47	0.19	No
fin.	3	109	18.03	232			280	88	SLU 47	0.38	No
ini.	3	121	-349.75	445			280	86	SLU 34	0.19	No
fin.	3	116	17.82	283			280	87	SLU 34	0.31	No
ini.	3	118	-348.13	467			280	87	SLU 68	0.19	No
fin.	3	109	18.09	249			280	88	SLU 68	0.35	No
ini.	3	123	-367.71	487			280	86	SLU 52	0.18	No
fin.	3	114	21.59	272			280	87	SLU 52	0.32	No
ini.	3	120	-355.77	473			280	86	SLU 55	0.18	No
fin.	3	111	19.37	259			280	88	SLU 55	0.34	No
ini.	3	125	-382.42	503			280	86	SLU 73	0.17	No
fin.	3	114	21.65	289			280	87	SLU 73	0.3	No

Verifiche a pressoflessione delle travi in muratura in combinazioni sismiche

Sezione	γM	N	M	Mu	Comb.	c.s.	Verifica
ini.	2	1054	-2095.91	324.11	SLV 8	0.15	No
fin.	2	1208	77.94	324.11	SLV 8	4.16	Si
ini.	2	454	-1035.72	324.11	SLV 3	0.31	No
fin.	2	245	52.94	324.11	SLV 3	6.12	Si
ini.	2	966	-1872.14	324.11	SLV 12	0.17	No
fin.	2	1280	61.14	324.11	SLV 12	5.3	Si
ini.	2	-952	1679.14	324.11	SLV 6	0.19	No
fin.	2	-1305	-49.48	324.11	SLV 6	6.55	Si
ini.	2	-1040	1902.91	324.11	SLV 9	0.17	No
fin.	2	-1234	-66.28	324.11	SLV 9	4.89	Si
ini.	2	-952	1679.14	324.11	SLV 5	0.19	No
fin.	2	-1305	-49.48	324.11	SLV 5	6.55	Si
ini.	2	454	-1035.72	324.11	SLV 4	0.31	No
fin.	2	245	52.94	324.11	SLV 4	6.12	Si
ini.	2	-1040	1902.91	324.11	SLV 10	0.17	No
fin.	2	-1234	-66.28	324.11	SLV 10	4.89	Si
ini.	2	966	-1872.14	324.11	SLV 11	0.17	No
fin.	2	1280	61.14	324.11	SLV 11	5.3	Si
ini.	2	1054	-2095.91	324.11	SLV 7	0.15	No
fin.	2	1208	77.94	324.11	SLV 7	4.16	Si

Verifiche a taglio delle travi in muratura secondo §C8.7.1.3.1 in combinazioni sismiche

Sezione	γM	N	M	V	Vt	Vp	Vt fess. diag.	Vt,lim	Comb.	c.s.	Verifica
ini.	2	966	-1872.14	10			421	0	SLV 11	0	No
fin.	2	1280	61.14	1937			421	0	SLV 11	0	No
ini.	2	966	-1872.14	10			421	0	SLV 12	0	No
fin.	2	1280	61.14	1937			421	0	SLV 12	0	No
ini.	2	454	-1035.72	248			421	65	SLV 4	0.26	No
fin.	2	245	52.94	1333			421	117	SLV 4	0.09	No
ini.	2	1054	-2095.91	75			421	0	SLV 8	0	No
fin.	2	1208	77.94	2348			421	0	SLV 8	0	No
ini.	2	-1040	1902.91	285			698	270	SLV 10	0.95	No

Sezione	γM	N	M	V	Vt	Vp	Vt fess. diag.	Vt,lim	Comb.	c.s.	Verifica
fin.	2	-1234	-66.28	-2333			750	286	SLV 10	0.12	No
ini.	2	1054	-2095.91	75			421	0	SLV 7	0	No
fin.	2	1208	77.94	2348			421	0	SLV 7	0	No
ini.	2	-441	842.72	112			538	213	SLV 13	1.9	Si
fin.	2	-271	-41.28	-1318			493	194	SLV 13	0.15	No
ini.	2	454	-1035.72	248			421	65	SLV 3	0.26	No
fin.	2	245	52.94	1333			421	117	SLV 3	0.09	No
ini.	2	-441	842.72	112			538	213	SLV 14	1.9	Si
fin.	2	-271	-41.28	-1318			493	194	SLV 14	0.15	No
ini.	2	-1040	1902.91	285			698	270	SLV 9	0.95	No
fin.	2	-1234	-66.28	-2333			750	286	SLV 9	0.12	No

Tabella dei coefficienti di sicurezza minimi

Stato limite	Coeff.s.	Comb.	Verifica
PF_SLV	0.155	SLV 7	No
V_SLV	0	SLV 7	No
PF_SLU	0.565	SLU 73	No
V_SLU	0.17	SLU 73	No

Trave di accoppiamento 135

Verifiche condotte secondo D.M. 17-01-18 (N.T.C.)

Dati geometrici

X ini.	Y ini.	Z ini.inf.	Z ini.sup.	H ini.	X fin.	Y fin.	Z fin.inf.	Z fin.sup	H fin.	Luce	Spessore	R. Trazione
-5.088	5.94	8.55	10.55	2	-5.088	6.44	8.55	10.55	2	0.5	0.28	30000

Caratteristiche del materiale

(Circolare 7 21-01-19 C8.5.I) Muratura in mattoni pieni e malta di calce LC2_Corti

fb_	fhk	fvk0	fhmedio	τ0	fv0	μ	ϕ	fvk,lim	E	G	FC
120000			172500	9000	20000	0.577	0.767	6500	320000000	128000000	1.2

Verifiche a pressoflessione delle travi in muratura in combinazioni non sismiche

Sezione	γM	N	M	Mu	Comb.	c.s.	Verifica
ini.	3	612	-373.28	5682.35	SLU 36	15.22	Si
fin.	3	113	-132.56	5682.35	SLU 36	42.87	Si
ini.	3	671	-398.2	5682.35	SLU 78	14.27	Si
fin.	3	117	-155.23	5682.35	SLU 78	36.61	Si
ini.	3	666	-385.79	5682.35	SLU 79	14.73	Si
fin.	3	118	-150.8	5682.35	SLU 79	37.68	Si
ini.	3	615	-371.22	5682.35	SLU 35	15.31	Si
fin.	3	114	-132.19	5682.35	SLU 35	42.99	Si
ini.	3	664	-387.86	5682.35	SLU 80	14.65	Si
fin.	3	117	-151.17	5682.35	SLU 80	37.59	Si
ini.	3	691	-388.64	5682.35	SLU 83	14.62	Si
fin.	3	127	-145.81	5682.35	SLU 83	38.97	Si
ini.	3	641	-368.43	5682.35	SLU 75	15.42	Si
fin.	3	111	-146.35	5682.35	SLU 75	38.83	Si
ini.	3	673	-396.14	5682.35	SLU 77	14.34	Si
fin.	3	118	-154.86	5682.35	SLU 77	36.69	Si
ini.	3	689	-390.71	5682.35	SLU 84	14.54	Si
fin.	3	126	-146.17	5682.35	SLU 84	38.87	Si
ini.	3	644	-366.37	5682.35	SLU 74	15.51	Si
fin.	3	112	-145.98	5682.35	SLU 74	38.93	Si

Verifiche a taglio delle travi in muratura secondo §C8.7.1.3.1 in combinazioni non sismiche

Sezione	γM	N	M	V	Vt	Vp	Vt fess. diag.	Vt,lim	Comb.	c.s.	Verifica
ini.	3	664	-387.86	81			2157	652	SLU 80	8.04	Si
fin.	3	117	-151.17	2370			2157	786	SLU 80	0.33	No
ini.	3	671	-398.2	79			2157	650	SLU 78	8.22	Si
fin.	3	117	-155.23	2417			2157	786	SLU 78	0.33	No
ini.	3	644	-366.37	35			2157	657	SLU 74	18.93	Si
fin.	3	112	-145.98	2298			2157	787	SLU 74	0.34	No
ini.	3	691	-388.64	108			2157	644	SLU 83	5.95	Si
fin.	3	127	-145.81	2432			2157	784	SLU 83	0.32	No
ini.	3	641	-368.43	38			2157	658	SLU 75	17.5	Si
fin.	3	111	-146.35	2296			2157	787	SLU 75	0.34	No
ini.	3	666	-385.79	78			2157	651	SLU 79	8.32	Si
fin.	3	118	-150.8	2372			2157	785	SLU 79	0.33	No
ini.	3	662	-358.87	67			2157	652	SLU 81	9.76	Si
fin.	3	121	-136.93	2310			2157	785	SLU 81	0.34	No
ini.	3	673	-396.14	76			2157	649	SLU 77	8.52	Si
fin.	3	118	-154.86	2420			2157	786	SLU 77	0.32	No
ini.	3	689	-390.71	111			2157	645	SLU 84	5.8	Si
fin.	3	126	-146.17	2430			2157	784	SLU 84	0.32	No
ini.	3	659	-360.94	70			2157	653	SLU 82	9.37	Si
fin.	3	121	-137.29	2308			2157	785	SLU 82	0.34	No

Verifiche a pressoflessione delle travi in muratura in combinazioni sismiche

Sezione	γM	N	M	Mu	Comb.	c.s.	Verifica
ini.	2	3216	-2470.47	8523.53	SLV 13	3.45	Si
fin.	2	663	-415.63	8523.53	SLV 13	20.51	Si
ini.	2	-2449	2071.3	8523.53	SLV 4	4.12	Si
fin.	2	-543	225	8523.53	SLV 4	37.88	Si
ini.	2	-1982	1543.94	8523.53	SLV 2	5.52	Si
fin.	2	-528	128.86	8523.53	SLV 2	66.15	Si

Sezione	γM	N	M	Mu	Comb.	c.s.	Verifica
ini.	2	-2449	2071.3	8523.53	SLV 3	4.12	Si
fin.	2	-543	225	8523.53	SLV 3	37.88	Si
ini.	2	-1982	1543.94	8523.53	SLV 1	5.52	Si
fin.	2	-528	128.86	8523.53	SLV 1	66.15	Si
ini.	2	2749	-1943.1	8523.53	SLV 15	4.39	Si
fin.	2	648	-319.49	8523.53	SLV 15	26.68	Si
ini.	2	1942	-1680.68	8523.53	SLV 10	5.07	Si
fin.	2	265	-337.22	8523.53	SLV 10	25.28	Si
ini.	2	2749	-1943.1	8523.53	SLV 16	4.39	Si
fin.	2	648	-319.49	8523.53	SLV 16	26.68	Si
ini.	2	1942	-1680.68	8523.53	SLV 9	5.07	Si
fin.	2	265	-337.22	8523.53	SLV 9	25.28	Si
ini.	2	3216	-2470.47	8523.53	SLV 14	3.45	Si
fin.	2	663	-415.63	8523.53	SLV 14	20.51	Si

Verifiche a taglio delle travi in muratura secondo §C8.7.1.3.1 in combinazioni sismiche

Sezione	γM	N	M	V	Vt	Vp	Vt fess. diag.	Vt,lim	Comb.	c.s.	Verifica
ini.	2	2749	-1943.1	4670			3235	165	SLV 16	0.04	No
fin.	2	648	-319.49	6887			3235	1067	SLV 16	0.15	No
ini.	2	-1175	1281.51	-5275			3705	1451	SLV 8	0.27	No
fin.	2	-145	146.59	-3608			3293	1248	SLV 8	0.35	No
ini.	2	-2449	2071.3	-6944			4215	1667	SLV 4	0.24	No
fin.	2	-543	225	-6001			3452	1330	SLV 4	0.22	No
ini.	2	3216	-2470.47	6724			3235	0	SLV 13	0	No
fin.	2	663	-415.63	8702			3235	1063	SLV 13	0.12	No
ini.	2	1942	-1680.68	5055			3235	674	SLV 9	0.13	No
fin.	2	265	-337.22	6309			3235	1158	SLV 9	0.18	No
ini.	2	1942	-1680.68	5055			3235	674	SLV 10	0.13	No
fin.	2	265	-337.22	6309			3235	1158	SLV 10	0.18	No
ini.	2	2749	-1943.1	4670			3235	165	SLV 15	0.04	No
fin.	2	648	-319.49	6887			3235	1067	SLV 15	0.15	No
ini.	2	-1175	1281.51	-5275			3705	1451	SLV 7	0.27	No
fin.	2	-145	146.59	-3608			3293	1248	SLV 7	0.35	No
ini.	2	3216	-2470.47	6724			3235	0	SLV 14	0	No
fin.	2	663	-415.63	8702			3235	1063	SLV 14	0.12	No
ini.	2	-2449	2071.3	-6944			4215	1667	SLV 3	0.24	No
fin.	2	-543	225	-6001			3452	1330	SLV 3	0.22	No

Tabella dei coefficienti di sicurezza minimi

Stato limite	Coeff.s.	Comb.	Verifica
PF_SLV	3.45	SLV 13	Si
V_SLV	0	SLV 13	No
PF_SLU	14.27	SLU 78	Si
V_SLU	0.322	SLU 83	No

Trave di accoppiamento 136

Verifiche condotte secondo D.M. 17-01-18 (N.T.C.)

Dati geometrici

X ini.	Y ini.	Z ini.inf.	Z ini.sup.	H ini.	X fin.	Y fin.	Z fin.inf.	Z fin.sup	H fin.	Luce	Spessore	R. Trazione
-5.088	5.94	11.35	12.05	0.7	-5.088	6.44	11.35	12.05	0.7	0.5	0.28	30000

Caratteristiche del materiale

(Circolare 7 21-01-19 C8.5.I) Muratura in mattoni pieni e malta di calce LC2_Corti

fb_	fhk	fvk0	fhmedio	τ0	fv0	μ	ϕ	fvk,lim	E	G	FC
120000			172500	9000	20000	0.577	0.767	6500	320000000	128000000	1.2

Verifiche a pressoflessione delle travi in muratura in combinazioni non sismiche

Sezione	γM	N	M	Mu	Comb.	c.s.	Verifica
ini.	3	-386	-104.31	696.09	SLU 84	6.67	Si
fin.	3	-55	75.94	696.09	SLU 84	9.17	Si
ini.	3	-373	-105.39	696.09	SLU 77	6.6	Si
fin.	3	-46	76.21	696.09	SLU 77	9.13	Si
ini.	3	-354	-100.71	696.09	SLU 80	6.91	Si
fin.	3	-41	74.66	696.09	SLU 80	9.32	Si
ini.	3	-369	-99.26	696.09	SLU 42	7.01	Si
fin.	3	-61	66.54	696.09	SLU 42	10.46	Si
ini.	3	-370	-99.9	696.09	SLU 41	6.97	Si
fin.	3	-62	66.6	696.09	SLU 41	10.45	Si
ini.	3	-387	-104.95	696.09	SLU 83	6.63	Si
fin.	3	-56	76	696.09	SLU 83	9.16	Si
ini.	3	-357	-100.33	696.09	SLU 35	6.94	Si
fin.	3	-52	66.81	696.09	SLU 35	10.42	Si
ini.	3	-355	-101.35	696.09	SLU 79	6.87	Si
fin.	3	-42	74.72	696.09	SLU 79	9.32	Si
ini.	3	-355	-99.69	696.09	SLU 36	6.98	Si
fin.	3	-51	66.75	696.09	SLU 36	10.43	Si
ini.	3	-372	-104.75	696.09	SLU 78	6.65	Si
fin.	3	-45	76.15	696.09	SLU 78	9.14	Si

Verifiche a taglio delle travi in muratura secondo §C8.7.1.3.1 in combinazioni non sismiche

Sezione	γM	N	M	V	Vt	Vp	Vt fess. diag.	Vt,lim	Comb.	c.s.	Verifica
ini.	3	-355	-101.35	1590			897	353	SLU 79	0.22	No
fin.	3	-42	74.72	-216			771	293	SLU 79	1.36	Si
ini.	3	-362	-98.17	1541			900	354	SLU 75	0.23	No

Sezione	γM	N	M	V	Vt	Vp	Vt fess. diag.	Vt,lim	Comb.	c.s.	Verifica
fin.	3	-47	73.44	-200			774	294	SLU 75	1.47	Si
ini.	3	-274	-80.97	1464			864	338	SLU 70	0.23	No
fin.	3	-17	66.85	-294			762	288	SLU 70	0.98	No
ini.	3	-386	-104.31	1568			909	358	SLU 84	0.23	No
fin.	3	-55	75.94	-168			777	296	SLU 84	1.76	Si
ini.	3	-275	-81.61	1470			865	339	SLU 69	0.23	No
fin.	3	-17	66.91	-294			762	288	SLU 69	0.98	No
ini.	3	-373	-105.39	1635			904	356	SLU 77	0.22	No
fin.	3	-46	76.21	-213			773	294	SLU 77	1.38	Si
ini.	3	-372	-104.75	1629			904	356	SLU 78	0.22	No
fin.	3	-45	76.15	-213			773	294	SLU 78	1.38	Si
ini.	3	-363	-98.81	1547			900	354	SLU 74	0.23	No
fin.	3	-48	73.5	-200			774	294	SLU 74	1.47	Si
ini.	3	-354	-100.71	1585			896	353	SLU 80	0.22	No
fin.	3	-41	74.66	-216			771	293	SLU 80	1.36	Si
ini.	3	-387	-104.95	1573			910	358	SLU 83	0.23	No
fin.	3	-56	76	-168			777	296	SLU 83	1.76	Si

Verifiche a pressoflessione delle travi in muratura in combinazioni sismiche

Sezione	γM	N	M	Mu	Comb.	c.s.	Verifica
ini.	2	608	347.5	1044.13	SLV 8	3	Si
fin.	2	458	-387.15	1044.13	SLV 8	2.7	Si
ini.	2	-995	-451.45	1044.13	SLV 9	2.31	Si
fin.	2	-492	480.82	1044.13	SLV 9	2.17	Si
ini.	2	-307	-239.64	1044.13	SLV 5	4.36	Si
fin.	2	-363	467.43	1044.13	SLV 5	2.23	Si
ini.	2	-1478	-493.06	1044.13	SLV 14	2.12	Si
fin.	2	-355	197.34	1044.13	SLV 14	5.29	Si
ini.	2	1092	389.11	1044.13	SLV 4	2.68	Si
fin.	2	321	-103.67	1044.13	SLV 4	10.07	Si
ini.	2	1092	389.11	1044.13	SLV 3	2.68	Si
fin.	2	321	-103.67	1044.13	SLV 3	10.07	Si
ini.	2	608	347.5	1044.13	SLV 7	3	Si
fin.	2	458	-387.15	1044.13	SLV 7	2.7	Si
ini.	2	-995	-451.45	1044.13	SLV 10	2.31	Si
fin.	2	-492	480.82	1044.13	SLV 10	2.17	Si
ini.	2	-307	-239.64	1044.13	SLV 6	4.36	Si
fin.	2	-363	467.43	1044.13	SLV 6	2.23	Si
ini.	2	-1478	-493.06	1044.13	SLV 13	2.12	Si
fin.	2	-355	197.34	1044.13	SLV 13	5.29	Si

Verifiche a taglio delle travi in muratura secondo §C8.7.1.3.1 in combinazioni sismiche

Sezione	γM	N	M	V	Vt	Vp	Vt fess. diag.	Vt,lim	Comb.	c.s.	Verifica
ini.	2	608	347.5	1823			1132	262	SLV 7	0.14	No
fin.	2	458	-387.15	-519			1132	311	SLV 7	0.6	No
ini.	2	-1204	-316.92	3153			1614	636	SLV 16	0.2	No
fin.	2	-108	-59.04	1219			1176	449	SLV 16	0.37	No
ini.	2	-80	135.69	2884			1164	443	SLV 11	0.15	No
fin.	2	329	-373.76	312			1132	347	SLV 11	1.11	Si
ini.	2	-1204	-316.92	3153			1614	636	SLV 15	0.2	No
fin.	2	-108	-59.04	1219			1176	449	SLV 15	0.37	No
ini.	2	1092	389.11	-382			1132	0	SLV 3	0	No
fin.	2	321	-103.67	-1554			1132	349	SLV 3	0.22	No
ini.	2	-80	135.69	2884			1164	443	SLV 12	0.15	No
fin.	2	329	-373.76	312			1132	347	SLV 12	1.11	Si
ini.	2	817	212.97	-1212			1132	174	SLV 2	0.14	No
fin.	2	75	152.71	-1608			1132	410	SLV 2	0.25	No
ini.	2	608	347.5	1823			1132	262	SLV 8	0.14	No
fin.	2	458	-387.15	-519			1132	311	SLV 8	0.6	No
ini.	2	1092	389.11	-382			1132	0	SLV 4	0	No
fin.	2	321	-103.67	-1554			1132	349	SLV 4	0.22	No
ini.	2	817	212.97	-1212			1132	174	SLV 1	0.14	No
fin.	2	75	152.71	-1608			1132	410	SLV 1	0.25	No

Tabella dei coefficienti di sicurezza minimi

Stato limite	Coeff.s.	Comb.	Verifica
PF_SLV	2.118	SLV 13	Si
V_SLV	0	SLV 3	No
PF_SLU	6.605	SLU 77	Si
V_SLU	0.218	SLU 77	No

Trave di accoppiamento 137

Verifiche condotte secondo D.M. 17-01-18 (N.T.C.)

Dati geometrici

X ini.	Y ini.	Z ini.inf.	Z ini.sup.	H ini.	X fin.	Y fin.	Z fin.inf.	Z fin.sup	H fin.	Luce	Spessore	R. Trazione
-6.467	-3.169	8.55	9.45	0.9	-7.467	-3.169	8.55	9.45	0.9	1	0.28	30000

Caratteristiche del materiale

(Circolare 7 21-01-19 C8.5.I) Muratura in mattoni pieni e malta di calce LC2_Corti

fb_	fhk	fvk0	fhmedio	τ0	fv0	μ	ϕ	fvk,lim	E	G	FC
120000			172500	9000	20000	0.577	0.767	6500	320000000	128000000	1.2

Verifiche a pressoflessione delle travi in muratura in combinazioni non sismiche

Sezione	γM	N	M	Mu	Comb.	c.s.	Verifica

Sezione	γM	N	M	Mu	Comb.	c.s.	Verifica
ini.	3	-1029	302.54	1150.68	SLU 65	3.8	Si
fin.	3	-596	-235.59	1150.68	SLU 65	4.88	Si
ini.	3	-1011	308.17	1150.68	SLU 73	3.73	Si
fin.	3	-674	-250.45	1150.68	SLU 73	4.59	Si
ini.	3	-823	285.79	1150.68	SLU 81	4.03	Si
fin.	3	-633	-226.85	1150.68	SLU 81	5.07	Si
ini.	3	-991	293.84	1150.68	SLU 52	3.92	Si
fin.	3	-613	-231.38	1150.68	SLU 52	4.97	Si
ini.	3	-912	286.33	1150.68	SLU 61	4.02	Si
fin.	3	-617	-225.76	1150.68	SLU 61	5.1	Si
ini.	3	-999	283.54	1150.68	SLU 68	4.06	Si
fin.	3	-656	-205.66	1150.68	SLU 68	5.6	Si
ini.	3	-1010	288.2	1150.68	SLU 44	3.99	Si
fin.	3	-535	-216.52	1150.68	SLU 44	5.31	Si
ini.	3	-931	300.67	1150.68	SLU 82	3.83	Si
fin.	3	-678	-244.83	1150.68	SLU 82	4.7	Si
ini.	3	-919	289.08	1150.68	SLU 75	3.98	Si
fin.	3	-682	-220.42	1150.68	SLU 75	5.22	Si
ini.	3	-981	289.18	1150.68	SLU 76	3.98	Si
fin.	3	-734	-220.52	1150.68	SLU 76	5.22	Si

Verifiche a taglio delle travi in muratura secondo §C8.7.1.3.1 in combinazioni non sismiche

Sezione	γM	N	M	V	Vt	Vp	Vt fess. diag.	Vt,lim	Comb.	c.s.	Verifica
ini.	3	-829	268.56	-1380			1172	463	SLU 66	0.34	No
fin.	3	-559	-187.57	-257			1075	424	SLU 66	1.65	Si
ini.	3	-823	285.79	-1339			1170	462	SLU 81	0.35	No
fin.	3	-633	-226.85	-378			1101	435	SLU 81	1.15	Si
ini.	3	-917	269.11	-1384			1204	475	SLU 46	0.34	No
fin.	3	-543	-186.49	-322			1069	422	SLU 46	1.31	Si
ini.	3	-849	277.74	-1390			1179	466	SLU 64	0.34	No
fin.	3	-522	-205.62	-347			1061	418	SLU 64	1.2	Si
ini.	3	-811	274.19	-1345			1165	461	SLU 74	0.34	No
fin.	3	-638	-202.44	-279			1103	436	SLU 74	1.57	Si
ini.	3	-791	259.86	-1326			1158	458	SLU 53	0.35	No
fin.	3	-576	-183.37	-239			1081	427	SLU 53	1.78	Si
ini.	3	-1029	302.54	-1427			1244	490	SLU 65	0.34	No
fin.	3	-596	-235.59	-520			1088	430	SLU 65	0.83	No
ini.	3	-809	254.23	-1362			1165	461	SLU 45	0.34	No
fin.	3	-498	-168.51	-218			1053	415	SLU 45	1.9	Si
ini.	3	-829	263.4	-1371			1172	463	SLU 43	0.34	No
fin.	3	-460	-186.55	-308			1039	409	SLU 43	1.33	Si
ini.	3	-937	283.44	-1403			1211	478	SLU 67	0.34	No
fin.	3	-604	-205.56	-361			1091	431	SLU 67	1.19	Si

Verifiche a pressoflessione delle travi in muratura in combinazioni sismiche

Sezione	γM	N	M	Mu	Comb.	c.s.	Verifica
ini.	2	-3184	1289.76	1726.01	SLV 1	1.34	Si
fin.	2	2544	-1657.29	1726.01	SLV 1	1.04	Si
ini.	2	-2850	880.67	1726.01	SLV 6	1.96	Si
fin.	2	778	-904.32	1726.01	SLV 6	1.91	Si
ini.	2	-3184	1289.76	1726.01	SLV 2	1.34	Si
fin.	2	2544	-1657.29	1726.01	SLV 2	1.04	Si
ini.	2	-2231	1062.11	1726.01	SLV 4	1.63	Si
fin.	2	2345	-1461.88	1726.01	SLV 4	1.18	Si
ini.	2	-2850	880.67	1726.01	SLV 5	1.96	Si
fin.	2	778	-904.32	1726.01	SLV 5	1.91	Si
ini.	2	944	-637.9	1726.01	SLV 14	2.71	Si
fin.	2	-3165	1145.43	1726.01	SLV 14	1.51	Si
ini.	2	944	-637.9	1726.01	SLV 13	2.71	Si
fin.	2	-3165	1145.43	1726.01	SLV 13	1.51	Si
ini.	2	1897	-865.55	1726.01	SLV 15	1.99	Si
fin.	2	-3364	1340.85	1726.01	SLV 15	1.29	Si
ini.	2	-2231	1062.11	1726.01	SLV 3	1.63	Si
fin.	2	2345	-1461.88	1726.01	SLV 3	1.18	Si
ini.	2	1897	-865.55	1726.01	SLV 16	1.99	Si
fin.	2	-3364	1340.85	1726.01	SLV 16	1.29	Si

Verifiche a taglio delle travi in muratura secondo §C8.7.1.3.1 in combinazioni sismiche

Sezione	γM	N	M	V	Vt	Vp	Vt fess. diag.	Vt,lim	Comb.	c.s.	Verifica
ini.	2	1563	-456.46	1992			1310	0	SLV 12	0	No
fin.	2	-1598	587.88	3285			1885	743	SLV 12	0.23	No
ini.	2	-3184	1289.76	-5528			2456	926	SLV 1	0.17	No
fin.	2	2544	-1657.29	-6010			1310	0	SLV 1	0	No
ini.	2	-2231	1062.11	-4404			2113	821	SLV 3	0.19	No
fin.	2	2345	-1461.88	-4806			1310	0	SLV 3	0	No
ini.	2	-2231	1062.11	-4404			2113	821	SLV 4	0.19	No
fin.	2	2345	-1461.88	-4806			1310	0	SLV 4	0	No
ini.	2	1563	-456.46	1992			1310	0	SLV 11	0	No
fin.	2	-1598	587.88	3285			1885	743	SLV 11	0.23	No
ini.	2	1897	-865.55	3418			1310	0	SLV 16	0	No
fin.	2	-3364	1340.85	5481			2521	945	SLV 16	0.17	No
ini.	2	-2850	880.67	-4101			2336	890	SLV 5	0.22	No
fin.	2	778	-904.32	-3814			1310	305	SLV 5	0.08	No
ini.	2	-2850	880.67	-4101			2336	890	SLV 6	0.22	No
fin.	2	778	-904.32	-3814			1310	305	SLV 6	0.08	No
ini.	2	-3184	1289.76	-5528			2456	926	SLV 2	0.17	No
fin.	2	2544	-1657.29	-6010			1310	0	SLV 2	0	No
ini.	2	1897	-865.55	3418			1310	0	SLV 15	0	No
fin.	2	-3364	1340.85	5481			2521	945	SLV 15	0.17	No

Tabella dei coefficienti di sicurezza minimi

Stato limite	Coeff.s.	Comb.	Verifica
PF_SLV	1.041	SLV 1	Si
V_SLV	0	SLV 1	No
PF_SLU	3.734	SLU 73	Si
V_SLU	0.335	SLU 64	No

Trave di accoppiamento 138

Verifiche condotte secondo D.M. 17-01-18 (N.T.C.)

Dati geometrici

X ini.	Y ini.	Z ini.inf.	Z ini.sup.	H ini.	X fin.	Y fin.	Z fin.inf.	Z fin.sup	H fin.	Luce	Spessore	R. Trazione
-6.467	-3.169	11.35	12.05	0.7	-7.467	-3.169	11.35	12.05	0.7	1	0.28	30000

Caratteristiche del materiale

(Circolare 7 21-01-19 C8.5.I) Muratura in mattoni pieni e malta di calce LC2_Corti

fb_	fhk	fvk0	fhmedio	τ0	fv0	μ	ϕ	fvk,lim	E	G	FC
120000			172500	9000	20000	0.577	0.767	6500	320000000	128000000	1.2

Verifiche a pressoflessione delle travi in muratura in combinazioni non sismiche

Sezione	γM	N	M	Mu	Comb.	c.s.	Verifica
ini.	3	142	-22.94	696.09	SLU 76	30.34	Si
fin.	3	-372	-89.69	696.09	SLU 76	7.76	Si
ini.	3	171	-14.33	696.09	SLU 55	48.56	Si
fin.	3	-332	-90.67	696.09	SLU 55	7.68	Si
ini.	3	224	-0.06	696.09	SLU 52	12392.67	Si
fin.	3	-384	-101.04	696.09	SLU 52	6.89	Si
ini.	3	195	-8.67	696.09	SLU 73	80.33	Si
fin.	3	-424	-100.06	696.09	SLU 73	6.96	Si
ini.	3	222	13.15	696.09	SLU 2	52.95	Si
fin.	3	-322	-89.52	696.09	SLU 2	7.78	Si
ini.	3	282	14.12	696.09	SLU 44	49.31	Si
fin.	3	-372	-107.8	696.09	SLU 44	6.46	Si
ini.	3	193	4.54	696.09	SLU 23	153.45	Si
fin.	3	-361	-88.54	696.09	SLU 23	7.86	Si
ini.	3	201	-8.77	696.09	SLU 68	79.36	Si
fin.	3	-360	-96.45	696.09	SLU 68	7.22	Si
ini.	3	230	-0.16	696.09	SLU 47	4294.85	Si
fin.	3	-320	-97.43	696.09	SLU 47	7.14	Si
ini.	3	253	5.51	696.09	SLU 65	126.42	Si
fin.	3	-412	-106.82	696.09	SLU 65	6.52	Si

Verifiche a taglio delle travi in muratura secondo §C8.7.1.3.1 in combinazioni non sismiche

Sezione	γM	N	M	V	Vt	Vp	Vt fess. diag.	Vt,lim	Comb.	c.s.	Verifica
ini.	3	148	-22.64	873			528	175	SLU 82	0.2	No
fin.	3	-386	-85.28	-1183			636	251	SLU 82	0.21	No
ini.	3	34	-56.97	1002			528	194	SLU 79	0.19	No
fin.	3	-212	-49.6	-984			588	229	SLU 79	0.23	No
ini.	3	88	-44.48	933			528	185	SLU 78	0.2	No
fin.	3	-274	-69.97	-1069			605	237	SLU 78	0.22	No
ini.	3	108	-42.05	972			528	182	SLU 74	0.19	No
fin.	3	-262	-62.52	-1086			602	235	SLU 74	0.22	No
ini.	3	115	-34.49	967			528	181	SLU 81	0.19	No
fin.	3	-321	-67.45	-1137			618	243	SLU 81	0.21	No
ini.	3	95	-36.92	928			528	184	SLU 84	0.2	No
fin.	3	-334	-74.9	-1120			622	244	SLU 84	0.22	No
ini.	3	55	-56.33	1028			528	190	SLU 77	0.19	No
fin.	3	-210	-52.14	-1022			587	229	SLU 77	0.22	No
ini.	3	91	-40.16	897			528	185	SLU 62	0.21	No
fin.	3	-230	-58.06	-999			593	231	SLU 62	0.23	No
ini.	3	62	-48.77	1023			528	189	SLU 83	0.18	No
fin.	3	-270	-57.08	-1073			604	236	SLU 83	0.22	No
ini.	3	141	-30.2	877			528	176	SLU 75	0.2	No
fin.	3	-326	-80.34	-1133			620	243	SLU 75	0.21	No

Verifiche a pressoflessione delle travi in muratura in combinazioni sismiche

Sezione	γM	N	M	Mu	Comb.	c.s.	Verifica
ini.	2	2797	522.81	1044.13	SLV 4	2	Si
fin.	2	-625	-358.91	1044.13	SLV 4	2.91	Si
ini.	2	3436	645.14	1044.13	SLV 1	1.62	Si
fin.	2	-1117	-497.93	1044.13	SLV 1	2.1	Si
ini.	2	-3152	-671.37	1044.13	SLV 16	1.56	Si
fin.	2	659	382.74	1044.13	SLV 16	2.73	Si
ini.	2	2099	369.89	1044.13	SLV 6	2.82	Si
fin.	2	-1241	-400.55	1044.13	SLV 6	2.61	Si
ini.	2	-2513	-549.04	1044.13	SLV 14	1.9	Si
fin.	2	167	243.72	1044.13	SLV 14	4.28	Si
ini.	2	-3152	-671.37	1044.13	SLV 15	1.56	Si
fin.	2	659	382.74	1044.13	SLV 15	2.73	Si
ini.	2	2797	522.81	1044.13	SLV 3	2	Si
fin.	2	-625	-358.91	1044.13	SLV 3	2.91	Si
ini.	2	-2513	-549.04	1044.13	SLV 13	1.9	Si
fin.	2	167	243.72	1044.13	SLV 13	4.28	Si
ini.	2	2099	369.89	1044.13	SLV 5	2.82	Si
fin.	2	-1241	-400.55	1044.13	SLV 5	2.61	Si
ini.	2	3436	645.14	1044.13	SLV 2	1.62	Si

Sezione	γM	N	M	Mu	Comb.	c.s.	Verifica
fin.	2	-1117	-497.93	1044.13	SLV 2	2.1	Si

Verifiche a taglio delle travi in muratura secondo §C8.7.1.3.1 in combinazioni sismiche

Sezione	γM	N	M	V	Vt	Vp	Vt fess. diag.	Vt,lim	Comb.	c.s.	Verifica
ini.	2	2797	522.81	-1728			793	0	SLV 4	0	No
fin.	2	-625	-358.91	-2524			968	382	SLV 4	0.15	No
ini.	2	-3152	-671.37	3598			1675	612	SLV 16	0.17	No
fin.	2	659	382.74	1496			793	171	SLV 16	0.11	No
ini.	2	2099	369.89	-1450			793	0	SLV 5	0	No
fin.	2	-1241	-400.55	-2400			1140	449	SLV 5	0.19	No
ini.	2	3436	645.14	-2460			793	0	SLV 1	0	No
fin.	2	-1117	-497.93	-3116			1105	436	SLV 1	0.14	No
ini.	2	2797	522.81	-1728			793	0	SLV 3	0	No
fin.	2	-625	-358.91	-2524			968	382	SLV 3	0.15	No
ini.	2	3436	645.14	-2460			793	0	SLV 2	0	No
fin.	2	-1117	-497.93	-3116			1105	436	SLV 2	0.14	No
ini.	2	-1815	-396.12	2588			1301	504	SLV 11	0.19	No
fin.	2	784	285.36	780			793	133	SLV 11	0.17	No
ini.	2	-1815	-396.12	2588			1301	504	SLV 12	0.19	No
fin.	2	784	285.36	780			793	133	SLV 12	0.17	No
ini.	2	2099	369.89	-1450			793	0	SLV 6	0	No
fin.	2	-1241	-400.55	-2400			1140	449	SLV 6	0.19	No
ini.	2	-3152	-671.37	3598			1675	612	SLV 15	0.17	No
fin.	2	659	382.74	1496			793	171	SLV 15	0.11	No

Tabella dei coefficienti di sicurezza minimi

Stato limite	Coeff.s.	Comb.	Verifica
PF_SLV	1.555	SLV 15	Si
V_SLV	0	SLV 1	No
PF_SLU	6.457	SLU 44	Si
V_SLU	0.185	SLU 83	No

Trave di accoppiamento 139

Verifiche condotte secondo D.M. 17-01-18 (N.T.C.)

Dati geometrici

X ini.	Y ini.	Z ini.inf.	Z ini.sup.	H ini.	X fin.	Y fin.	Z fin.inf.	Z fin.sup	H fin.	Luce	Spessore	R. Trazione
-5.437	-3.169	8.55	10.55	2	-5.937	-3.169	8.55	10.55	2	0.5	0.28	30000

Caratteristiche del materiale

(Circolare 7 21-01-19 C8.5.I) Muratura in mattoni pieni e malta di calce LC2_Corti

fb_	fhk	fvk0	fhmedio	τ0	fv0	μ	ϕ	fvk,lim	E	G	FC
120000			172500	9000	20000	0.577	0.767	6500	320000000	128000000	1.2

Verifiche a pressoflessione delle travi in muratura in combinazioni non sismiche

Sezione	γM	N	M	Mu	Comb.	c.s.	Verifica
ini.	3	-1494	377.17	5682.35	SLU 82	15.07	Si
fin.	3	-904	122.66	5682.35	SLU 82	46.33	Si
ini.	3	-1247	350.33	5682.35	SLU 39	16.22	Si
fin.	3	-626	182.57	5682.35	SLU 39	31.12	Si
ini.	3	-1532	401.96	5682.35	SLU 81	14.14	Si
fin.	3	-819	190.79	5682.35	SLU 81	29.78	Si
ini.	3	-1507	383.21	5682.35	SLU 83	14.83	Si
fin.	3	-799	199.8	5682.35	SLU 83	28.44	Si
ini.	3	-1450	339.56	5682.35	SLU 79	16.73	Si
fin.	3	-791	185.25	5682.35	SLU 79	30.67	Si
ini.	3	-1446	357.5	5682.35	SLU 60	15.89	Si
fin.	3	-808	155.03	5682.35	SLU 60	36.65	Si
ini.	3	-1494	374.68	5682.35	SLU 74	15.17	Si
fin.	3	-822	180.61	5682.35	SLU 74	31.46	Si
ini.	3	-1469	355.92	5682.35	SLU 77	15.97	Si
fin.	3	-801	189.62	5682.35	SLU 77	29.97	Si
ini.	3	-1456	349.89	5682.35	SLU 75	16.24	Si
fin.	3	-906	112.48	5682.35	SLU 75	50.52	Si
ini.	3	-1469	358.42	5682.35	SLU 84	15.85	Si
fin.	3	-884	131.68	5682.35	SLU 84	43.15	Si

Verifiche a taglio delle travi in muratura secondo §C8.7.1.3.1 in combinazioni non sismiche

Sezione	γM	N	M	V	Vt	Vp	Vt fess. diag.	Vt,lim	Comb.	c.s.	Verifica
ini.	3	-1494	377.17	-3123			2754	1089	SLU 82	0.35	No
fin.	3	-904	122.66	-226			2518	989	SLU 82	4.37	Si
ini.	3	-1421	338.74	-2963			2725	1077	SLU 62	0.36	No
fin.	3	-788	164.05	-223			2472	968	SLU 62	4.34	Si
ini.	3	-1450	339.56	-3035			2737	1082	SLU 79	0.36	No
fin.	3	-791	185.25	-172			2473	968	SLU 79	5.65	Si
ini.	3	-1469	358.42	-3068			2744	1085	SLU 84	0.35	No
fin.	3	-884	131.68	-153			2510	985	SLU 84	6.42	Si
ini.	3	-1469	355.92	-3122			2744	1085	SLU 77	0.35	No
fin.	3	-801	189.62	-171			2477	970	SLU 77	5.68	Si
ini.	3	-1507	383.21	-3223			2760	1091	SLU 83	0.34	No
fin.	3	-799	199.8	-296			2476	970	SLU 83	3.27	Si
ini.	3	-1532	401.96	-3278			2770	1095	SLU 81	0.33	No
fin.	3	-819	190.79	-369			2484	974	SLU 81	2.64	Si
ini.	3	-1446	357.5	-3018			2735	1081	SLU 60	0.36	No
fin.	3	-808	155.03	-295			2480	972	SLU 60	3.29	Si

Sezione	γM	N	M	V	Vt	Vp	Vt fess. diag.	Vt,lim	Comb.	c.s.	Verifica
ini.	3	-1456	349.89	-3022			2739	1083	SLU 75	0.36	No
fin.	3	-906	112.48	-101			2519	989	SLU 75	9.82	Si
ini.	3	-1494	374.68	-3177			2754	1089	SLU 74	0.34	No
fin.	3	-822	180.61	-244			2485	974	SLU 74	4	Si

Verifiche a pressoflessione delle travi in muratura in combinazioni sismiche

Sezione	γM	N	M	Mu	Comb.	c.s.	Verifica
ini.	2	389	-973.42	8523.53	SLV 13	8.76	Si
fin.	2	188	706.37	8523.53	SLV 13	12.07	Si
ini.	2	-2584	1477.83	8523.53	SLV 4	5.77	Si
fin.	2	-1493	-518.03	8523.53	SLV 4	16.45	Si
ini.	2	-2584	1477.83	8523.53	SLV 3	5.77	Si
fin.	2	-1493	-518.03	8523.53	SLV 3	16.45	Si
ini.	2	882	-980.45	8523.53	SLV 16	8.69	Si
fin.	2	1252	1004.1	8523.53	SLV 16	8.49	Si
ini.	2	243	-128.25	8523.53	SLV 11	66.46	Si
fin.	2	1533	818.7	8523.53	SLV 11	10.41	Si
ini.	2	882	-980.45	8523.53	SLV 15	8.69	Si
fin.	2	1252	1004.1	8523.53	SLV 15	8.49	Si
ini.	2	-3077	1484.86	8523.53	SLV 1	5.74	Si
fin.	2	-2557	-815.75	8523.53	SLV 1	10.45	Si
ini.	2	243	-128.25	8523.53	SLV 12	66.46	Si
fin.	2	1533	818.7	8523.53	SLV 12	10.41	Si
ini.	2	389	-973.42	8523.53	SLV 14	8.76	Si
fin.	2	188	706.37	8523.53	SLV 14	12.07	Si
ini.	2	-3077	1484.86	8523.53	SLV 2	5.74	Si
fin.	2	-2557	-815.75	8523.53	SLV 2	10.45	Si

Verifiche a taglio delle travi in muratura secondo §C8.7.1.3.1 in combinazioni sismiche

Sezione	γM	N	M	V	Vt	Vp	Vt fess. diag.	Vt,lim	Comb.	c.s.	Verifica
ini.	2	-796	609.23	-4667			3553	1380	SLV 7	0.3	No
fin.	2	710	362.07	-4181			3235	1052	SLV 7	0.25	No
ini.	2	-3077	1484.86	-7030			4466	1764	SLV 2	0.25	No
fin.	2	-2557	-815.75	-5664			4258	1684	SLV 2	0.3	No
ini.	2	-3077	1484.86	-7030			4466	1764	SLV 1	0.25	No
fin.	2	-2557	-815.75	-5664			4258	1684	SLV 1	0.3	No
ini.	2	882	-980.45	2607			3235	1008	SLV 15	0.39	No
fin.	2	1252	1004.1	5326			3235	905	SLV 15	0.17	No
ini.	2	389	-973.42	3163			3235	1130	SLV 13	0.36	No
fin.	2	188	706.37	6628			3235	1176	SLV 13	0.18	No
ini.	2	-2584	1477.83	-7586			4269	1688	SLV 3	0.22	No
fin.	2	-1493	-518.03	-6965			3832	1507	SLV 3	0.22	No
ini.	2	-796	609.23	-4667			3553	1380	SLV 8	0.3	No
fin.	2	710	362.07	-4181			3235	1052	SLV 8	0.25	No
ini.	2	882	-980.45	2607			3235	1008	SLV 16	0.39	No
fin.	2	1252	1004.1	5326			3235	905	SLV 16	0.17	No
ini.	2	-2584	1477.83	-7586			4269	1688	SLV 4	0.22	No
fin.	2	-1493	-518.03	-6965			3832	1507	SLV 4	0.22	No
ini.	2	389	-973.42	3163			3235	1130	SLV 14	0.36	No
fin.	2	188	706.37	6628			3235	1176	SLV 14	0.18	No

Tabella dei coefficienti di sicurezza minimi

Stato limite	Coeff.s.	Comb.	Verifica
PF_SLV	5.74	SLV 1	Si
V_SLV	0.17	SLV 15	No
PF_SLU	14.137	SLU 81	Si
V_SLU	0.334	SLU 81	No

Trave di accoppiamento 140

Verifiche condotte secondo D.M. 17-01-18 (N.T.C.)

Dati geometrici

X ini.	Y ini.	Z ini.inf.	Z ini.sup.	H ini.	X fin.	Y fin.	Z fin.inf.	Z fin.sup	H fin.	Luce	Spessore	R. Trazione
-5.437	-3.169	11.35	12.05	0.7	-5.937	-3.169	11.35	12.05	0.7	0.5	0.28	30000

Caratteristiche del materiale

(Circolare 7 21-01-19 C8.5.I) Muratura in mattoni pieni e malta di calce LC2_Corti

fb_	fhk	fvk0	fhmedio	τ0	fv0	μ	ϕ	fvk,lim	E	G	FC
120000			172500	9000	20000	0.577	0.767	6500	320000000	128000000	1.2

Verifiche a pressoflessione delle travi in muratura in combinazioni non sismiche

Sezione	γM	N	M	Mu	Comb.	c.s.	Verifica
ini.	3	267	73.73	696.09	SLU 81	9.44	Si
fin.	3	19	-41.39	696.09	SLU 81	16.82	Si
ini.	3	285	67.61	696.09	SLU 74	10.3	Si
fin.	3	34	-40.47	696.09	SLU 74	17.2	Si
ini.	3	312	68.54	696.09	SLU 64	10.16	Si
fin.	3	133	-26.58	696.09	SLU 64	26.19	Si
ini.	3	303	68.46	696.09	SLU 75	10.17	Si
fin.	3	82	-30.28	696.09	SLU 75	22.99	Si
ini.	3	277	69.29	696.09	SLU 60	10.05	Si
fin.	3	60	-35.39	696.09	SLU 60	19.67	Si
ini.	3	343	69.95	696.09	SLU 65	9.95	Si
fin.	3	212	-9.58	696.09	SLU 65	72.64	Si
ini.	3	322	69.14	696.09	SLU 52	10.07	Si

Sezione	γM	N	M	Mu	Comb.	c.s.	Verifica
fin.	3	174	-13.95	696.09	SLU 52	49.89	Si
ini.	3	311	73.58	696.09	SLU 73	9.46	Si
fin.	3	133	-19.96	696.09	SLU 73	34.88	Si
ini.	3	296	70.13	696.09	SLU 61	9.93	Si
fin.	3	108	-25.19	696.09	SLU 61	27.63	Si
ini.	3	285	74.57	696.09	SLU 82	9.33	Si
fin.	3	67	-31.2	696.09	SLU 82	22.31	Si

Verifiche a taglio delle travi in muratura secondo §C8.7.1.3.1 in combinazioni non sismiche

Sezione	γM	N	M	V	Vt	Vp	Vt fess. diag.	Vt,lim	Comb.	c.s.	Verifica
ini.	3	316	63.98	837			755	204	SLU 66	0.24	No
fin.	3	114	-30.1	-1495			755	258	SLU 66	0.17	No
ini.	3	256	65.92	936			755	222	SLU 84	0.24	No
fin.	3	30	-34.28	-1651			755	278	SLU 84	0.17	No
ini.	3	285	67.61	918			755	213	SLU 74	0.23	No
fin.	3	34	-40.47	-1706			755	276	SLU 74	0.16	No
ini.	3	255	58.97	924			755	222	SLU 77	0.24	No
fin.	3	-3	-43.56	-1697			756	285	SLU 77	0.17	No
ini.	3	237	65.08	919			755	227	SLU 83	0.25	No
fin.	3	-18	-44.48	-1725			762	288	SLU 83	0.17	No
ini.	3	285	74.57	930			755	213	SLU 82	0.23	No
fin.	3	67	-31.2	-1660			755	269	SLU 82	0.16	No
ini.	3	273	59.81	941			755	217	SLU 78	0.23	No
fin.	3	45	-33.36	-1623			755	274	SLU 78	0.17	No
ini.	3	267	73.73	913			755	219	SLU 81	0.24	No
fin.	3	19	-41.39	-1734			755	280	SLU 81	0.16	No
ini.	3	311	73.58	907			755	206	SLU 73	0.23	No
fin.	3	133	-19.96	-1520			755	253	SLU 73	0.17	No
ini.	3	303	68.46	935			755	208	SLU 75	0.22	No
fin.	3	82	-30.28	-1632			755	266	SLU 75	0.16	No

Verifiche a pressoflessione delle travi in muratura in combinazioni sismiche

Sezione	γM	N	M	Mu	Comb.	c.s.	Verifica
ini.	2	3446	531.63	1044.13	SLV 2	1.96	Si
fin.	2	2753	41.92	1044.13	SLV 2	24.91	Si
ini.	2	2827	507.52	1044.13	SLV 3	2.06	Si
fin.	2	1953	-21.15	1044.13	SLV 3	49.36	Si
ini.	2	2136	233	1044.13	SLV 5	4.48	Si
fin.	2	2101	92.77	1044.13	SLV 5	11.26	Si
ini.	2	2136	233	1044.13	SLV 6	4.48	Si
fin.	2	2101	92.77	1044.13	SLV 6	11.26	Si
ini.	2	3446	531.63	1044.13	SLV 1	1.96	Si
fin.	2	2753	41.92	1044.13	SLV 1	24.91	Si
ini.	2	-2360	-401.94	1044.13	SLV 14	2.6	Si
fin.	2	-1777	-23.02	1044.13	SLV 14	45.36	Si
ini.	2	2827	507.52	1044.13	SLV 4	2.06	Si
fin.	2	1953	-21.15	1044.13	SLV 4	49.36	Si
ini.	2	-2360	-401.94	1044.13	SLV 13	2.6	Si
fin.	2	-1777	-23.02	1044.13	SLV 13	45.36	Si
ini.	2	-2979	-426.05	1044.13	SLV 15	2.45	Si
fin.	2	-2576	-86.09	1044.13	SLV 15	12.13	Si
ini.	2	-2979	-426.05	1044.13	SLV 16	2.45	Si
fin.	2	-2576	-86.09	1044.13	SLV 16	12.13	Si

Verifiche a taglio delle travi in muratura secondo §C8.7.1.3.1 in combinazioni sismiche

Sezione	γM	N	M	V	Vt	Vp	Vt fess. diag.	Vt,lim	Comb.	c.s.	Verifica
ini.	2	3446	531.63	-793			1132	0	SLV 1	0	No
fin.	2	2753	41.92	-1789			1132	0	SLV 1	0	No
ini.	2	73	152.65	-823			1132	410	SLV 7	0.5	No
fin.	2	-565	-117.46	-2230			1358	535	SLV 7	0.24	No
ini.	2	2136	233	1044			1132	0	SLV 5	0	No
fin.	2	2101	92.77	-566			1132	0	SLV 5	0	No
ini.	2	2827	507.52	-1353			1132	0	SLV 4	0	No
fin.	2	1953	-21.15	-2288			1132	0	SLV 4	0	No
ini.	2	394	-47.07	2058			1132	330	SLV 9	0.16	No
fin.	2	742	73.29	-17			1132	210	SLV 9	12.4	Si
ini.	2	394	-47.07	2058			1132	330	SLV 10	0.16	No
fin.	2	742	73.29	-17			1132	210	SLV 10	12.4	Si
ini.	2	2827	507.52	-1353			1132	0	SLV 3	0	No
fin.	2	1953	-21.15	-2288			1132	0	SLV 3	0	No
ini.	2	73	152.65	-823			1132	410	SLV 8	0.5	No
fin.	2	-565	-117.46	-2230			1358	535	SLV 8	0.24	No
ini.	2	2136	233	1044			1132	0	SLV 6	0	No
fin.	2	2101	92.77	-566			1132	0	SLV 6	0	No
ini.	2	3446	531.63	-793			1132	0	SLV 2	0	No
fin.	2	2753	41.92	-1789			1132	0	SLV 2	0	No

Tabella dei coefficienti di sicurezza minimi

Stato limite	Coeff.s.	Comb.	Verifica
PF_SLV	1.964	SLV 1	Si
V_SLV	0	SLV 1	No
PF_SLU	9.335	SLU 82	Si
V_SLU	0.161	SLU 81	No

Trave di accoppiamento 141

Verifiche condotte secondo D.M. 17-01-18 (N.T.C.)

Dati geometrici

X ini.	Y ini.	Z ini.inf.	Z ini.sup.	H ini.	X fin.	Y fin.	Z fin.inf.	Z fin.sup	H fin.	Luce	Spessore	R. Trazione
-1.952	-3.169	8.55	9.45	0.9	-2.952	-3.169	8.55	9.45	0.9	1	0.28	30000

Caratteristiche del materiale

(Circolare 7 21-01-19 C8.5.I) Muratura in mattoni pieni e malta di calce LC2_Corti

fb_	fhk	fvk0	fhmedio	τ0	fv0	μ	ϕ	fvk,lim	E	G	FC
120000			172500	9000	20000	0.577	0.767	6500	320000000	128000000	1.2

Verifiche a pressoflessione delle travi in muratura in combinazioni non sismiche

Sezione	γM	N	M	Mu	Comb.	c.s.	Verifica
ini.	3	341	-59.95	1150.68	SLU 82	19.2	Si
fin.	3	-1641	397.71	1150.68	SLU 82	2.89	Si
ini.	3	248	-60.29	1150.68	SLU 81	19.09	Si
fin.	3	-1774	404.79	1150.68	SLU 81	2.84	Si
ini.	3	218	-53.21	1150.68	SLU 77	21.62	Si
fin.	3	-1755	396	1150.68	SLU 77	2.91	Si
ini.	3	193	-49.56	1150.68	SLU 79	23.22	Si
fin.	3	-1751	389.49	1150.68	SLU 79	2.95	Si
ini.	3	317	-54.23	1150.68	SLU 75	21.22	Si
fin.	3	-1596	386.22	1150.68	SLU 75	2.98	Si
ini.	3	311	-52.87	1150.68	SLU 78	21.76	Si
fin.	3	-1622	388.93	1150.68	SLU 78	2.96	Si
ini.	3	285	-49.22	1150.68	SLU 80	23.38	Si
fin.	3	-1618	382.42	1150.68	SLU 80	3.01	Si
ini.	3	335	-58.59	1150.68	SLU 84	19.64	Si
fin.	3	-1666	400.42	1150.68	SLU 84	2.87	Si
ini.	3	242	-58.93	1150.68	SLU 83	19.53	Si
fin.	3	-1799	407.49	1150.68	SLU 83	2.82	Si
ini.	3	224	-54.57	1150.68	SLU 74	21.09	Si
fin.	3	-1730	393.29	1150.68	SLU 74	2.93	Si

Verifiche a taglio delle travi in muratura secondo §C8.7.1.3.1 in combinazioni non sismiche

Sezione	γM	N	M	V	Vt	Vp	Vt fess. diag.	Vt,lim	Comb.	c.s.	Verifica
ini.	3	359	-51.7	-211			873	249	SLU 73	1.18	Si
fin.	3	-1478	372.28	2155			1406	546	SLU 73	0.25	No
ini.	3	218	-53.21	-220			873	283	SLU 77	1.29	Si
fin.	3	-1755	396	2284			1505	578	SLU 77	0.25	No
ini.	3	311	-52.87	-253			873	261	SLU 78	1.03	Si
fin.	3	-1622	388.93	2274			1457	563	SLU 78	0.25	No
ini.	3	341	-59.95	-128			873	253	SLU 82	1.99	Si
fin.	3	-1641	397.71	2245			1464	565	SLU 82	0.25	No
ini.	3	335	-58.59	-154			873	255	SLU 84	1.65	Si
fin.	3	-1666	400.42	2274			1473	568	SLU 84	0.25	No
ini.	3	242	-58.93	-121			873	277	SLU 83	2.28	Si
fin.	3	-1799	407.49	2285			1521	583	SLU 83	0.25	No
ini.	3	353	-50.34	-237			873	250	SLU 76	1.05	Si
fin.	3	-1504	374.99	2184			1415	549	SLU 76	0.25	No
ini.	3	317	-54.23	-226			873	259	SLU 75	1.15	Si
fin.	3	-1596	386.22	2245			1448	560	SLU 75	0.25	No
ini.	3	285	-49.22	-242			873	267	SLU 80	1.1	Si
fin.	3	-1618	382.42	2220			1456	562	SLU 80	0.25	No
ini.	3	224	-54.57	-194			873	282	SLU 74	1.45	Si
fin.	3	-1730	393.29	2256			1496	575	SLU 74	0.25	No

Verifiche a pressoflessione delle travi in muratura in combinazioni sismiche

Sezione	γM	N	M	Mu	Comb.	c.s.	Verifica
ini.	2	1488	-402.2	1726.01	SLV 12	4.29	Si
fin.	2	-3340	583.7	1726.01	SLV 12	2.96	Si
ini.	2	1488	-402.2	1726.01	SLV 11	4.29	Si
fin.	2	-3340	583.7	1726.01	SLV 11	2.96	Si
ini.	2	2719	-659.38	1726.01	SLV 13	2.62	Si
fin.	2	-4026	1011.88	1726.01	SLV 13	1.71	Si
ini.	2	-2876	705.61	1726.01	SLV 1	2.45	Si
fin.	2	2362	-540.29	1726.01	SLV 1	3.19	Si
ini.	2	3055	-761.18	1726.01	SLV 16	2.27	Si
fin.	2	-4742	1064.99	1726.01	SLV 16	1.62	Si
ini.	2	2719	-659.38	1726.01	SLV 14	2.62	Si
fin.	2	-4026	1011.88	1726.01	SLV 14	1.71	Si
ini.	2	-2540	603.81	1726.01	SLV 3	2.86	Si
fin.	2	1647	-487.18	1726.01	SLV 3	3.54	Si
ini.	2	-2540	603.81	1726.01	SLV 4	2.86	Si
fin.	2	1647	-487.18	1726.01	SLV 4	3.54	Si
ini.	2	3055	-761.18	1726.01	SLV 15	2.27	Si
fin.	2	-4742	1064.99	1726.01	SLV 15	1.62	Si
ini.	2	-2876	705.61	1726.01	SLV 2	2.45	Si
fin.	2	2362	-540.29	1726.01	SLV 2	3.19	Si

Verifiche a taglio delle travi in muratura secondo §C8.7.1.3.1 in combinazioni sismiche

Sezione	γM	N	M	V	Vt	Vp	Vt fess. diag.	Vt,lim	Comb.	c.s.	Verifica
ini.	2	1488	-402.2	2001			1310	0	SLV 12	0	No
fin.	2	-3340	583.7	2788			2513	942	SLV 12	0.34	No
ini.	2	3055	-761.18	3694			1310	0	SLV 16	0	No
fin.	2	-4742	1064.99	5612			3017	1076	SLV 16	0.19	No
ini.	2	-2540	603.81	-3430			2225	856	SLV 3	0.25	No
fin.	2	1647	-487.18	-2522			1310	0	SLV 3	0	No
ini.	2	2719	-659.38	3007			1310	0	SLV 13	0	No
fin.	2	-4026	1011.88	5592			2760	1010	SLV 13	0.18	No
ini.	2	-2876	705.61	-4116			2345	893	SLV 1	0.22	No

Sezione	γM	N	M	V	Vt	Vp	Vt fess. diag.	Vt,lim	Comb.	c.s.	Verifica
fin.	2	2362	-540.29	-2542			1310	0	SLV 1	0	No
ini.	2	1488	-402.2	2001			1310	0	SLV 11	0	No
fin.	2	-3340	583.7	2788			2513	942	SLV 11	0.34	No
ini.	2	-2876	705.61	-4116			2345	893	SLV 2	0.22	No
fin.	2	2362	-540.29	-2542			1310	0	SLV 2	0	No
ini.	2	-2540	603.81	-3430			2225	856	SLV 4	0.25	No
fin.	2	1647	-487.18	-2522			1310	0	SLV 4	0	No
ini.	2	2719	-659.38	3007			1310	0	SLV 14	0	No
fin.	2	-4026	1011.88	5592			2760	1010	SLV 14	0.18	No
ini.	2	3055	-761.18	3694			1310	0	SLV 15	0	No
fin.	2	-4742	1064.99	5612			3017	1076	SLV 15	0.19	No

Tabella dei coefficienti di sicurezza minimi

Stato limite	Coeff.s.	Comb.	Verifica
PF_SLV	1.621	SLV 15	Si
V_SLV	0	SLV 1	No
PF_SLU	2.824	SLU 83	Si
V_SLU	0.247	SLU 78	No

Trave di accoppiamento 142

Verifiche condotte secondo D.M. 17-01-18 (N.T.C.)

Dati geometrici

X ini.	Y ini.	Z ini.inf.	Z ini.sup.	H ini.	X fin.	Y fin.	Z fin.inf.	Z fin.sup	H fin.	Luce	Spessore	R. Trazione
-1.952	-3.169	11.35	12.05	0.7	-2.952	-3.169	11.35	12.05	0.7	1	0.28	30000

Caratteristiche del materiale

(Circolare 7 21-01-19 C8.5.I) Muratura in mattoni pieni e malta di calce LC2_Corti

fb_	fhk	fvk0	fhmedio	τ0	fv0	μ	ϕ	fvk,lim	E	G	FC
120000			172500	9000	20000	0.577	0.767	6500	320000000	128000000	1.2

Verifiche a pressoflessione delle travi in muratura in combinazioni non sismiche

Sezione	γM	N	M	Mu	Comb.	c.s.	Verifica
ini.	3	-1086	-223.37	696.09	SLU 84	3.12	Si
fin.	3	88	6.83	696.09	SLU 84	101.89	Si
ini.	3	-1004	-214.91	696.09	SLU 75	3.24	Si
fin.	3	112	4.33	696.09	SLU 75	160.7	Si
ini.	3	-1106	-220.99	696.09	SLU 82	3.15	Si
fin.	3	70	8.99	696.09	SLU 82	77.46	Si
ini.	3	-1053	-219.54	696.09	SLU 74	3.17	Si
fin.	3	66	1.9	696.09	SLU 74	365.75	Si
ini.	3	-976	-212.31	696.09	SLU 80	3.28	Si
fin.	3	102	0.91	696.09	SLU 80	763.88	Si
ini.	3	-983	-217.29	696.09	SLU 78	3.2	Si
fin.	3	130	2.18	696.09	SLU 78	319.66	Si
ini.	3	-1135	-228	696.09	SLU 83	3.05	Si
fin.	3	41	4.4	696.09	SLU 83	158.07	Si
ini.	3	-1032	-221.91	696.09	SLU 77	3.14	Si
fin.	3	83	-0.25	696.09	SLU 77	2775.64	Si
ini.	3	-1025	-216.94	696.09	SLU 79	3.21	Si
fin.	3	55	-1.52	696.09	SLU 79	458.82	Si
ini.	3	-1155	-225.62	696.09	SLU 81	3.09	Si
fin.	3	24	6.56	696.09	SLU 81	106.15	Si

Verifiche a taglio delle travi in muratura secondo §C8.7.1.3.1 in combinazioni non sismiche

Sezione	γM	N	M	V	Vt	Vp	Vt fess. diag.	Vt,lim	Comb.	c.s.	Verifica
ini.	3	-1155	-225.62	2467			852	331	SLU 81	0.13	No
fin.	3	24	6.56	-769			528	195	SLU 81	0.25	No
ini.	3	-1053	-219.54	2412			823	321	SLU 74	0.13	No
fin.	3	66	1.9	-771			528	189	SLU 74	0.24	No
ini.	3	-1106	-220.99	2479			838	326	SLU 82	0.13	No
fin.	3	70	8.99	-788			528	188	SLU 82	0.24	No
ini.	3	-964	-206.85	2370			798	313	SLU 76	0.13	No
fin.	3	115	4.68	-783			528	180	SLU 76	0.23	No
ini.	3	-976	-212.31	2387			802	314	SLU 80	0.13	No
fin.	3	102	0.91	-777			528	183	SLU 80	0.24	No
ini.	3	-1032	-221.91	2437			817	319	SLU 77	0.13	No
fin.	3	83	-0.25	-777			528	186	SLU 77	0.24	No
ini.	3	-1135	-228	2493			846	329	SLU 83	0.13	No
fin.	3	41	4.4	-776			528	192	SLU 83	0.25	No
ini.	3	-983	-217.29	2449			804	315	SLU 78	0.13	No
fin.	3	130	2.18	-796			528	178	SLU 78	0.22	No
ini.	3	-1086	-223.37	2504			832	324	SLU 84	0.13	No
fin.	3	88	6.83	-795			528	185	SLU 84	0.23	No
ini.	3	-1004	-214.91	2424			809	317	SLU 75	0.13	No
fin.	3	112	4.33	-790			528	181	SLU 75	0.23	No

Verifiche a pressoflessione delle travi in muratura in combinazioni sismiche

Sezione	γM	N	M	Mu	Comb.	c.s.	Verifica
ini.	2	-2295	-522.69	1044.13	SLV 13	2	Si
fin.	2	1629	411.41	1044.13	SLV 13	2.54	Si
ini.	2	-2217	-404.11	1044.13	SLV 12	2.58	Si
fin.	2	908	261.95	1044.13	SLV 12	3.99	Si
ini.	2	1508	320.56	1044.13	SLV 1	3.26	Si
fin.	2	-1840	-496.11	1044.13	SLV 1	2.1	Si

Sezione	γM	N	M	Mu	Comb.	c.s.	Verifica
ini.	2	929	239.07	1044.13	SLV 4	4.37	Si
fin.	2	-1612	-418.49	1044.13	SLV 4	2.49	Si
ini.	2	-2873	-604.18	1044.13	SLV 15	1.73	Si
fin.	2	1857	489.03	1044.13	SLV 15	2.14	Si
ini.	2	-2873	-604.18	1044.13	SLV 16	1.73	Si
fin.	2	1857	489.03	1044.13	SLV 16	2.14	Si
ini.	2	-2295	-522.69	1044.13	SLV 14	2	Si
fin.	2	1629	411.41	1044.13	SLV 14	2.54	Si
ini.	2	929	239.07	1044.13	SLV 3	4.37	Si
fin.	2	-1612	-418.49	1044.13	SLV 3	2.49	Si
ini.	2	1508	320.56	1044.13	SLV 2	3.26	Si
fin.	2	-1840	-496.11	1044.13	SLV 2	2.1	Si
ini.	2	-2217	-404.11	1044.13	SLV 11	2.58	Si
fin.	2	908	261.95	1044.13	SLV 11	3.99	Si

Verifiche a taglio delle travi in muratura secondo §C8.7.1.3.1 in combinazioni sismiche

Sezione	γM	N	M	V	Vt	Vp	Vt fess. diag.	Vt,lim	Comb.	c.s.	Verifica
ini.	2	1508	320.56	-1160			793	0	SLV 1	0	No
fin.	2	-1840	-496.11	-3069			1308	506	SLV 1	0.16	No
ini.	2	-2873	-604.18	4285			1597	591	SLV 15	0.14	No
fin.	2	1857	489.03	2004			793	0	SLV 15	0	No
ini.	2	-2295	-522.69	3777			1435	545	SLV 14	0.14	No
fin.	2	1629	411.41	1599			793	0	SLV 14	0	No
ini.	2	-2217	-404.11	3150			1413	539	SLV 12	0.17	No
fin.	2	908	261.95	844			793	81	SLV 12	0.1	No
ini.	2	1508	320.56	-1160			793	0	SLV 2	0	No
fin.	2	-1840	-496.11	-3069			1308	506	SLV 2	0.16	No
ini.	2	-2873	-604.18	4285			1597	591	SLV 16	0.14	No
fin.	2	1857	489.03	2004			793	0	SLV 16	0	No
ini.	2	929	239.07	-652			793	68	SLV 4	0.1	No
fin.	2	-1612	-418.49	-2663			1244	485	SLV 4	0.18	No
ini.	2	-2217	-404.11	3150			1413	539	SLV 11	0.17	No
fin.	2	908	261.95	844			793	81	SLV 11	0.1	No
ini.	2	-2295	-522.69	3777			1435	545	SLV 13	0.14	No
fin.	2	1629	411.41	1599			793	0	SLV 13	0	No
ini.	2	929	239.07	-652			793	68	SLV 3	0.1	No
fin.	2	-1612	-418.49	-2663			1244	485	SLV 3	0.18	No

Tabella dei coefficienti di sicurezza minimi

Stato limite	Coeff.s.	Comb.	Verifica
PF_SLV	1.728	SLV 15	Si
V_SLV	0	SLV 1	No
PF_SLU	3.053	SLU 83	Si
V_SLU	0.128	SLU 78	No

Trave di accoppiamento 143

Verifiche condotte secondo D.M. 17-01-18 (N.T.C.)

Dati geometrici

X ini.	Y ini.	Z ini.inf.	Z ini.sup.	H ini.	X fin.	Y fin.	Z fin.inf.	Z fin.sup	H fin.	Luce	Spessore	R. Trazione
-1.958	5.948	8.55	9.45	0.9	-2.958	5.948	8.55	9.45	0.9	1	0.28	30000

Caratteristiche del materiale

(Circolare 7 21-01-19 C8.5.I) Muratura in mattoni pieni e malta di calce LC2_Corti

fb_	fhk	fvk0	fhmedio	τ0	fv0	μ	ϕ	fvk,lim	E	G	FC
120000			172500	9000	20000	0.577	0.767	6500	320000000	128000000	1.2

Verifiche a pressoflessione delle travi in muratura in combinazioni non sismiche

Sezione	γM	N	M	Mu	Comb.	c.s.	Verifica
ini.	3	291	-85.15	1150.68	SLU 71	13.51	Si
fin.	3	-716	340.04	1150.68	SLU 71	3.38	Si
ini.	3	337	-97.87	1150.68	SLU 77	11.76	Si
fin.	3	-760	364.86	1150.68	SLU 77	3.15	Si
ini.	3	303	-85.91	1150.68	SLU 70	13.39	Si
fin.	3	-707	340.58	1150.68	SLU 70	3.38	Si
ini.	3	299	-88.55	1150.68	SLU 72	13	Si
fin.	3	-720	343.77	1150.68	SLU 72	3.35	Si
ini.	3	341	-103.9	1150.68	SLU 80	11.08	Si
fin.	3	-777	371.77	1150.68	SLU 80	3.1	Si
ini.	3	333	-100.5	1150.68	SLU 79	11.45	Si
fin.	3	-773	368.05	1150.68	SLU 79	3.13	Si
ini.	3	345	-101.26	1150.68	SLU 78	11.36	Si
fin.	3	-764	368.58	1150.68	SLU 78	3.12	Si
ini.	3	280	-83.62	1150.68	SLU 84	13.76	Si
fin.	3	-735	337.64	1150.68	SLU 84	3.41	Si
ini.	3	295	-82.52	1150.68	SLU 69	13.95	Si
fin.	3	-703	336.85	1150.68	SLU 69	3.42	Si
ini.	3	340	-106.94	1150.68	SLU 38	10.76	Si
fin.	3	-679	334.41	1150.68	SLU 38	3.44	Si

Verifiche a taglio delle travi in muratura secondo §C8.7.1.3.1 in combinazioni non sismiche

Sezione	γM	N	M	V	Vt	Vp	Vt fess. diag.	Vt,lim	Comb.	c.s.	Verifica
ini.	3	303	-85.91	-123			873	263	SLU 70	2.14	Si
fin.	3	-707	340.58	1519			1128	446	SLU 70	0.29	No
ini.	3	341	-103.9	-8			873	253	SLU 80	30.41	Si

Sezione	γM	N	M	V	Vt	Vp	Vt fess. diag.	Vt,lim	Comb.	c.s.	Verifica
fin.	3	-777	371.77	1603			1153	456	SLU 80	0.28	No
ini.	3	285	-80.45	-122			873	267	SLU 57	2.18	Si
fin.	3	-690	328.5	1461			1122	444	SLU 57	0.3	No
ini.	3	299	-88.55	-93			873	264	SLU 72	2.83	Si
fin.	3	-720	343.77	1513			1133	448	SLU 72	0.3	No
ini.	3	291	-85.15	-109			873	266	SLU 71	2.43	Si
fin.	3	-716	340.04	1503			1131	447	SLU 71	0.3	No
ini.	3	337	-97.87	-54			873	254	SLU 77	4.71	Si
fin.	3	-760	364.86	1599			1147	454	SLU 77	0.28	No
ini.	3	345	-101.26	-38			873	252	SLU 78	6.64	Si
fin.	3	-764	368.58	1609			1148	454	SLU 78	0.28	No
ini.	3	277	-77.05	-138			873	269	SLU 56	1.94	Si
fin.	3	-687	324.78	1451			1121	443	SLU 56	0.31	No
ini.	3	295	-82.52	-139			873	265	SLU 69	1.91	Si
fin.	3	-703	336.85	1509			1127	445	SLU 69	0.3	No
ini.	3	333	-100.5	-24			873	255	SLU 79	10.5	Si
fin.	3	-773	368.05	1593			1152	456	SLU 79	0.29	No

Verifiche a pressoflessione delle travi in muratura in combinazioni sismiche

Sezione	γM	N	M	Mu	Comb.	c.s.	Verifica
ini.	2	-2523	941.87	1726.01	SLV 4	1.83	Si
fin.	2	1353	-1052.21	1726.01	SLV 4	1.64	Si
ini.	2	2725	-989.84	1726.01	SLV 14	1.74	Si
fin.	2	-2250	1431.78	1726.01	SLV 14	1.21	Si
ini.	2	-3059	977.84	1726.01	SLV 2	1.77	Si
fin.	2	1906	-1418.78	1726.01	SLV 2	1.22	Si
ini.	2	2725	-989.84	1726.01	SLV 13	1.74	Si
fin.	2	-2250	1431.78	1726.01	SLV 13	1.21	Si
ini.	2	1863	-379.09	1726.01	SLV 12	4.55	Si
fin.	2	-1992	1228.32	1726.01	SLV 12	1.41	Si
ini.	2	3261	-1025.81	1726.01	SLV 15	1.68	Si
fin.	2	-2802	1798.35	1726.01	SLV 15	0.96	No
ini.	2	3261	-1025.81	1726.01	SLV 16	1.68	Si
fin.	2	-2802	1798.35	1726.01	SLV 16	0.96	No
ini.	2	-2523	941.87	1726.01	SLV 3	1.83	Si
fin.	2	1353	-1052.21	1726.01	SLV 3	1.64	Si
ini.	2	1863	-379.09	1726.01	SLV 11	4.55	Si
fin.	2	-1992	1228.32	1726.01	SLV 11	1.41	Si
ini.	2	-3059	977.84	1726.01	SLV 1	1.77	Si
fin.	2	1906	-1418.78	1726.01	SLV 1	1.22	Si

Verifiche a taglio delle travi in muratura secondo §C8.7.1.3.1 in combinazioni sismiche

Sezione	γM	N	M	V	Vt	Vp	Vt fess. diag.	Vt,lim	Comb.	c.s.	Verifica
ini.	2	3261	-1025.81	3943			1310	0	SLV 15	0	No
fin.	2	-2802	1798.35	6091			2319	885	SLV 15	0.15	No
ini.	2	-3059	977.84	-4369			2411	913	SLV 2	0.21	No
fin.	2	1906	-1418.78	-4331			1310	0	SLV 2	0	No
ini.	2	-2523	941.87	-4344			2218	854	SLV 4	0.2	No
fin.	2	1353	-1052.21	-3769			1310	0	SLV 4	0	No
ini.	2	2725	-989.84	3919			1310	0	SLV 13	0	No
fin.	2	-2250	1431.78	5529			2120	823	SLV 13	0.15	No
ini.	2	3261	-1025.81	3943			1310	0	SLV 16	0	No
fin.	2	-2802	1798.35	6091			2319	885	SLV 16	0.15	No
ini.	2	1863	-379.09	1071			1310	0	SLV 12	0	No
fin.	2	-1992	1228.32	3295			2027	792	SLV 12	0.24	No
ini.	2	1863	-379.09	1071			1310	0	SLV 11	0	No
fin.	2	-1992	1228.32	3295			2027	792	SLV 11	0.24	No
ini.	2	-2523	941.87	-4344			2218	854	SLV 3	0.2	No
fin.	2	1353	-1052.21	-3769			1310	0	SLV 3	0	No
ini.	2	-3059	977.84	-4369			2411	913	SLV 1	0.21	No
fin.	2	1906	-1418.78	-4331			1310	0	SLV 1	0	No
ini.	2	2725	-989.84	3919			1310	0	SLV 14	0	No
fin.	2	-2250	1431.78	5529			2120	823	SLV 14	0.15	No

Tabella dei coefficienti di sicurezza minimi

Stato limite	Coeff.s.	Comb.	Verifica
PF_SLV	0.96	SLV 15	No
V_SLV	0	SLV 1	No
PF_SLU	3.095	SLU 80	Si
V_SLU	0.282	SLU 78	No

Trave di accoppiamento 144

Verifiche condotte secondo D.M. 17-01-18 (N.T.C.)

Dati geometrici

X ini.	Y ini.	Z ini.inf.	Z ini.sup.	H ini.	X fin.	Y fin.	Z fin.inf.	Z fin.sup	H fin.	Luce	Spessore	R. Trazione
-1.958	5.948	11.35	12.05	0.7	-2.958	5.948	11.35	12.05	0.7	1	0.28	30000

Caratteristiche del materiale

(Circolare 7 21-01-19 C8.5.I) Muratura in mattoni pieni e malta di calce LC2_Corti

fb_	fhk	fvk0	fhmedio	τ0	fv0	μ	ϕ	fvk,lim	E	G	FC
120000			172500	9000	20000	0.577	0.767	6500	320000000	128000000	1.2

Verifiche a pressoflessione delle travi in muratura in combinazioni non sismiche

Sezione	γM	N	M	Mu	Comb.	c.s.	Verifica

Sezione	γM	N	M	Mu	Comb.	c.s.	Verifica
ini.	3	-465	-378.16	696.09	SLU 79	1.84	Si
fin.	3	164	181.77	696.09	SLU 79	3.83	Si
ini.	3	-457	-359.16	696.09	SLU 83	1.94	Si
fin.	3	127	156.88	696.09	SLU 83	4.44	Si
ini.	3	-415	-345.17	696.09	SLU 36	2.02	Si
fin.	3	168	172.55	696.09	SLU 36	4.03	Si
ini.	3	-444	-382.48	696.09	SLU 78	1.82	Si
fin.	3	194	184.32	696.09	SLU 78	3.78	Si
ini.	3	-401	-345.89	696.09	SLU 75	2.01	Si
fin.	3	163	152.71	696.09	SLU 75	4.56	Si
ini.	3	-430	-348.88	696.09	SLU 76	2	Si
fin.	3	143	157.69	696.09	SLU 76	4.41	Si
ini.	3	-440	-345.24	696.09	SLU 38	2.02	Si
fin.	3	144	174.52	696.09	SLU 38	3.99	Si
ini.	3	-470	-382.55	696.09	SLU 80	1.82	Si
fin.	3	170	186.29	696.09	SLU 80	3.74	Si
ini.	3	-440	-378.09	696.09	SLU 77	1.84	Si
fin.	3	188	179.8	696.09	SLU 77	3.87	Si
ini.	3	-462	-363.55	696.09	SLU 84	1.91	Si
fin.	3	132	161.4	696.09	SLU 84	4.31	Si

Verifiche a taglio delle travi in muratura secondo §C8.7.1.3.1 in combinazioni non sismiche

Sezione	γM	N	M	V	Vt	Vp	Vt fess. diag.	Vt,lim	Comb.	c.s.	Verifica
ini.	3	-397	-341.5	1512			639	252	SLU 74	0.17	No
fin.	3	157	148.19	-145			528	173	SLU 74	1.19	Si
ini.	3	-440	-378.09	1626			651	257	SLU 77	0.16	No
fin.	3	188	179.8	-72			528	168	SLU 77	2.35	Si
ini.	3	-362	-341.44	1472			630	248	SLU 70	0.17	No
fin.	3	209	168.63	-53			528	164	SLU 70	3.08	Si
ini.	3	-444	-382.48	1638			653	258	SLU 78	0.16	No
fin.	3	194	184.32	-59			528	167	SLU 78	2.84	Si
ini.	3	-465	-378.16	1615			659	260	SLU 79	0.16	No
fin.	3	164	181.77	-56			528	172	SLU 79	3.05	Si
ini.	3	-462	-363.55	1585			658	260	SLU 84	0.16	No
fin.	3	132	161.4	-120			528	178	SLU 84	1.48	Si
ini.	3	-430	-348.88	1522			649	256	SLU 76	0.17	No
fin.	3	143	157.69	-109			528	176	SLU 76	1.62	Si
ini.	3	-401	-345.89	1524			641	253	SLU 75	0.17	No
fin.	3	163	152.71	-132			528	172	SLU 75	1.3	Si
ini.	3	-470	-382.55	1628			660	261	SLU 80	0.16	No
fin.	3	170	186.29	-44			528	171	SLU 80	3.92	Si
ini.	3	-457	-359.16	1572			656	259	SLU 83	0.16	No
fin.	3	127	156.88	-132			528	179	SLU 83	1.35	Si

Verifiche a pressoflessione delle travi in muratura in combinazioni sismiche

Sezione	γM	N	M	Mu	Comb.	c.s.	Verifica
ini.	2	-998	-1019.71	1044.13	SLV 14	1.02	Si
fin.	2	1039	904.18	1044.13	SLV 14	1.15	Si
ini.	2	-998	-1019.71	1044.13	SLV 13	1.02	Si
fin.	2	1039	904.18	1044.13	SLV 13	1.15	Si
ini.	2	-1227	-1254.15	1044.13	SLV 16	0.83	No
fin.	2	1507	1136.25	1044.13	SLV 16	0.92	No
ini.	2	-879	-874.8	1044.13	SLV 11	1.19	Si
fin.	2	1222	747.65	1044.13	SLV 11	1.4	Si
ini.	2	758	845.62	1044.13	SLV 2	1.23	Si
fin.	2	-1335	-979.69	1044.13	SLV 2	1.07	Si
ini.	2	-1227	-1254.15	1044.13	SLV 15	0.83	No
fin.	2	1507	1136.25	1044.13	SLV 15	0.92	No
ini.	2	-879	-874.8	1044.13	SLV 12	1.19	Si
fin.	2	1222	747.65	1044.13	SLV 12	1.4	Si
ini.	2	530	611.18	1044.13	SLV 4	1.71	Si
fin.	2	-867	-747.61	1044.13	SLV 4	1.4	Si
ini.	2	758	845.62	1044.13	SLV 1	1.23	Si
fin.	2	-1335	-979.69	1044.13	SLV 1	1.07	Si
ini.	2	530	611.18	1044.13	SLV 3	1.71	Si
fin.	2	-867	-747.61	1044.13	SLV 3	1.4	Si

Verifiche a taglio delle travi in muratura secondo §C8.7.1.3.1 in combinazioni sismiche

Sezione	γM	N	M	V	Vt	Vp	Vt fess. diag.	Vt,lim	Comb.	c.s.	Verifica
ini.	2	530	611.18	-1424			793	202	SLV 3	0.14	No
fin.	2	-867	-747.61	-2307			1035	409	SLV 3	0.18	No
ini.	2	-998	-1019.71	3317			1072	424	SLV 13	0.13	No
fin.	2	1039	904.18	1991			793	0	SLV 13	0	No
ini.	2	-879	-874.8	2585			1039	411	SLV 11	0.16	No
fin.	2	1222	747.65	1791			793	0	SLV 11	0	No
ini.	2	-998	-1019.71	3317			1072	424	SLV 14	0.13	No
fin.	2	1039	904.18	1991			793	0	SLV 14	0	No
ini.	2	-1227	-1254.15	3828			1136	448	SLV 16	0.12	No
fin.	2	1507	1136.25	2709			793	0	SLV 16	0	No
ini.	2	530	611.18	-1424			793	202	SLV 4	0.14	No
fin.	2	-867	-747.61	-2307			1035	409	SLV 4	0.18	No
ini.	2	-879	-874.8	2585			1039	411	SLV 12	0.16	No
fin.	2	1222	747.65	1791			793	0	SLV 12	0	No
ini.	2	758	845.62	-1934			793	142	SLV 2	0.07	No
fin.	2	-1335	-979.69	-3024			1166	458	SLV 2	0.15	No
ini.	2	758	845.62	-1934			793	142	SLV 1	0.07	No
fin.	2	-1335	-979.69	-3024			1166	458	SLV 1	0.15	No
ini.	2	-1227	-1254.15	3828			1136	448	SLV 15	0.12	No
fin.	2	1507	1136.25	2709			793	0	SLV 15	0	No

Tabella dei coefficienti di sicurezza minimi

Stato limite	Coeff.s.	Comb.	Verifica
PF_SLV	0.833	SLV 15	No
V_SLV	0	SLV 11	No
PF_SLU	1.82	SLU 80	Si
V_SLU	0.157	SLU 78	No

Trave di accoppiamento 145

Verifiche condotte secondo D.M. 17-01-18 (N.T.C.)

Dati geometrici

X ini.	Y ini.	Z ini.inf.	Z ini.sup.	H ini.	X fin.	Y fin.	Z fin.inf.	Z fin.sup	H fin.	Luce	Spessore	R. Trazione
-21.878	5.937	12.05	12.95	0.9	-22.878	5.937	12.05	12.95	0.9	1	0.28	30000

Caratteristiche del materiale

(Circolare 7 21-01-19 C8.5.I) Muratura in mattoni pieni e malta di calce LC2_Corti

fb_	fhk	fvk0	fhmedio	τ0	fv0	μ	ϕ	fvk,lim	E	G	FC
120000			172500	9000	20000	0.577	0.767	6500	320000000	128000000	1.2

Verifiche a pressoflessione delle travi in muratura in combinazioni non sismiche

Sezione	γM	N	M	Mu	Comb.	c.s.	Verifica
ini.	3	-444	116.56	1150.68	SLU 83	9.87	Si
fin.	3	-106	-102.25	1150.68	SLU 83	11.25	Si
ini.	3	-467	126.21	1150.68	SLU 82	9.12	Si
fin.	3	-113	-113.95	1150.68	SLU 82	10.1	Si
ini.	3	-423	116.73	1150.68	SLU 40	9.86	Si
fin.	3	-96	-106.49	1150.68	SLU 40	10.81	Si
ini.	3	-373	115.56	1150.68	SLU 78	9.96	Si
fin.	3	-29	-102.25	1150.68	SLU 78	11.25	Si
ini.	3	-384	117.19	1150.68	SLU 75	9.82	Si
fin.	3	-44	-106.66	1150.68	SLU 75	10.79	Si
ini.	3	-455	118.19	1150.68	SLU 81	9.74	Si
fin.	3	-121	-106.66	1150.68	SLU 81	10.79	Si
ini.	3	-436	121.26	1150.68	SLU 73	9.49	Si
fin.	3	-96	-108.85	1150.68	SLU 73	10.57	Si
ini.	3	-412	115.1	1150.68	SLU 42	10	Si
fin.	3	-82	-102.08	1150.68	SLU 42	11.27	Si
ini.	3	-425	119.63	1150.68	SLU 76	9.62	Si
fin.	3	-82	-104.43	1150.68	SLU 76	11.02	Si
ini.	3	-456	124.58	1150.68	SLU 84	9.24	Si
fin.	3	-98	-109.54	1150.68	SLU 84	10.5	Si

Verifiche a taglio delle travi in muratura secondo §C8.7.1.3.1 in combinazioni non sismiche

Sezione	γM	N	M	V	Vt	Vp	Vt fess. diag.	Vt,lim	Comb.	c.s.	Verifica
ini.	3	-456	124.58	-261			1037	408	SLU 84	1.56	Si
fin.	3	-98	-109.54	-513			909	347	SLU 84	0.68	No
ini.	3	-436	121.26	-248			1030	405	SLU 73	1.63	Si
fin.	3	-96	-108.85	-503			908	347	SLU 73	0.69	No
ini.	3	-455	118.19	-212			1037	408	SLU 81	1.93	Si
fin.	3	-121	-106.66	-524			917	352	SLU 81	0.67	No
ini.	3	-444	116.56	-237			1033	406	SLU 83	1.71	Si
fin.	3	-106	-102.25	-488			912	349	SLU 83	0.71	No
ini.	3	-467	126.21	-236			1042	410	SLU 82	1.74	Si
fin.	3	-113	-113.95	-548			914	350	SLU 82	0.64	No
ini.	3	-411	108.71	-178			1021	401	SLU 39	2.26	Si
fin.	3	-105	-99.2	-501			911	349	SLU 39	0.7	No
ini.	3	-393	111.78	-214			1015	398	SLU 31	1.86	Si
fin.	3	-80	-101.39	-481			902	344	SLU 31	0.72	No
ini.	3	-425	119.63	-274			1026	403	SLU 76	1.47	Si
fin.	3	-82	-104.43	-467			903	344	SLU 76	0.74	No
ini.	3	-423	116.73	-202			1026	403	SLU 40	2	Si
fin.	3	-96	-106.49	-526			908	347	SLU 40	0.66	No
ini.	3	-412	115.1	-227			1022	401	SLU 42	1.77	Si
fin.	3	-82	-102.08	-490			903	344	SLU 42	0.7	No

Verifiche a pressoflessione delle travi in muratura in combinazioni sismiche

Sezione	γM	N	M	Mu	Comb.	c.s.	Verifica
ini.	2	-1540	822.71	1726.01	SLV 8	2.1	Si
fin.	2	740	-721.71	1726.01	SLV 8	2.39	Si
ini.	2	-903	707.37	1726.01	SLV 1	2.44	Si
fin.	2	1272	-714.89	1726.01	SLV 1	2.41	Si
ini.	2	1015	-688.74	1726.01	SLV 10	2.51	Si
fin.	2	-881	603.86	1726.01	SLV 10	2.86	Si
ini.	2	1015	-688.74	1726.01	SLV 9	2.51	Si
fin.	2	-881	603.86	1726.01	SLV 9	2.86	Si
ini.	2	-1501	1017.61	1726.01	SLV 3	1.7	Si
fin.	2	1496	-971.4	1726.01	SLV 3	1.78	Si
ini.	2	-1501	1017.61	1726.01	SLV 4	1.7	Si
fin.	2	1496	-971.4	1726.01	SLV 4	1.78	Si
ini.	2	976	-883.64	1726.01	SLV 14	1.95	Si
fin.	2	-1638	853.55	1726.01	SLV 14	2.02	Si
ini.	2	976	-883.64	1726.01	SLV 13	1.95	Si
fin.	2	-1638	853.55	1726.01	SLV 13	2.02	Si
ini.	2	-1540	822.71	1726.01	SLV 7	2.1	Si
fin.	2	740	-721.71	1726.01	SLV 7	2.39	Si
ini.	2	-903	707.37	1726.01	SLV 2	2.44	Si

Sezione	γM	N	M	Mu	Comb.	c.s.	Verifica
fin.	2	1272	-714.89	1726.01	SLV 2	2.41	Si

Verifiche a taglio delle travi in muratura secondo §C8.7.1.3.1 in combinazioni sismiche

Sezione	γM	N	M	V	Vt	Vp	Vt fess. diag.	Vt,lim	Comb.	c.s.	Verifica
ini.	2	-903	707.37	-2403			1635	646	SLV 2	0.27	No
fin.	2	1272	-714.89	-3012			1310	0	SLV 2	0	No
ini.	2	-1501	1017.61	-3331			1850	730	SLV 3	0.22	No
fin.	2	1496	-971.4	-2728			1310	0	SLV 3	0	No
ini.	2	378	-573.39	2101			1310	412	SLV 16	0.2	No
fin.	2	-1413	597.03	2486			1819	718	SLV 16	0.29	No
ini.	2	-903	707.37	-2403			1635	646	SLV 1	0.27	No
fin.	2	1272	-714.89	-3012			1310	0	SLV 1	0	No
ini.	2	976	-883.64	3029			1310	234	SLV 14	0.08	No
fin.	2	-1638	853.55	2202			1900	748	SLV 14	0.34	No
ini.	2	-1501	1017.61	-3331			1850	730	SLV 4	0.22	No
fin.	2	1496	-971.4	-2728			1310	0	SLV 4	0	No
ini.	2	1015	-688.74	2211			1310	217	SLV 9	0.1	No
fin.	2	-881	603.86	45			1627	643	SLV 9	14.21	Si
ini.	2	378	-573.39	2101			1310	412	SLV 15	0.2	No
fin.	2	-1413	597.03	2486			1819	718	SLV 15	0.29	No
ini.	2	1015	-688.74	2211			1310	217	SLV 10	0.1	No
fin.	2	-881	603.86	45			1627	643	SLV 10	14.21	Si
ini.	2	976	-883.64	3029			1310	234	SLV 13	0.08	No
fin.	2	-1638	853.55	2202			1900	748	SLV 13	0.34	No

Tabella dei coefficienti di sicurezza minimi

Stato limite	Coeff.s.	Comb.	Verifica
PF_SLV	1.696	SLV 3	Si
V_SLV	0	SLV 1	No
PF_SLU	9.117	SLU 82	Si
V_SLU	0.638	SLU 82	No

Trave di accoppiamento 146

Verifiche condotte secondo D.M. 17-01-18 (N.T.C.)

Dati geometrici

X ini.	Y ini.	Z ini.inf.	Z ini.sup.	H ini.	X fin.	Y fin.	Z fin.inf.	Z fin.sup	H fin.	Luce	Spessore	R. Trazione
-21.878	5.937	14.85	15.15	0.3	-22.878	5.937	14.85	15.15	0.3	1	0.28	30000

Caratteristiche del materiale

(Circolare 7 21-01-19 C8.5.I) Muratura in mattoni pieni e malta di calce LC2_Corti

fb_	fhk	fvk0	fhmedio	τ0	fv0	μ	ϕ	fvk,lim	E	G	FC
120000			172500	9000	20000	0.577	0.767	6500	320000000	128000000	1.2

Verifiche a pressoflessione delle travi in muratura in combinazioni non sismiche

Sezione	γM	N	M	Mu	Comb.	c.s.	Verifica
ini.	3	-225	-68.37	127.85	SLU 56	1.87	Si
fin.	3	-168	-57.84	127.85	SLU 56	2.21	Si
ini.	3	-217	-69.06	127.85	SLU 72	1.85	Si
fin.	3	-138	-54.46	127.85	SLU 72	2.35	Si
ini.	3	-250	-69.09	127.85	SLU 78	1.85	Si
fin.	3	-241	-67.35	127.85	SLU 78	1.9	Si
ini.	3	-223	-70.72	127.85	SLU 71	1.81	Si
fin.	3	-125	-52.7	127.85	SLU 71	2.43	Si
ini.	3	-192	-68.34	127.85	SLU 50	1.87	Si
fin.	3	-65	-44.96	127.85	SLU 50	2.84	Si
ini.	3	-235	-74.86	127.85	SLU 69	1.71	Si
fin.	3	-151	-59.46	127.85	SLU 69	2.15	Si
ini.	3	-204	-72.48	127.85	SLU 48	1.76	Si
fin.	3	-90	-51.72	127.85	SLU 48	2.47	Si
ini.	3	-197	-70.82	127.85	SLU 49	1.81	Si
fin.	3	-103	-53.48	127.85	SLU 49	2.39	Si
ini.	3	-228	-73.2	127.85	SLU 70	1.75	Si
fin.	3	-163	-61.22	127.85	SLU 70	2.09	Si
ini.	3	-256	-70.75	127.85	SLU 77	1.81	Si
fin.	3	-229	-65.59	127.85	SLU 77	1.95	Si

Verifiche a taglio delle travi in muratura secondo §C8.7.1.3.1 in combinazioni non sismiche

Sezione	γM	N	M	V	Vt	Vp	Vt fess. diag.	Vt,lim	Comb.	c.s.	Verifica
ini.	3	-235	-74.86	488			278	110	SLU 69	0.23	No
fin.	3	-151	-59.46	-428			256	101	SLU 69	0.24	No
ini.	3	-225	-68.37	451			276	109	SLU 56	0.24	No
fin.	3	-168	-57.84	-411			261	103	SLU 56	0.25	No
ini.	3	-192	-68.34	439			267	105	SLU 50	0.24	No
fin.	3	-65	-44.96	-347			233	90	SLU 50	0.26	No
ini.	3	-204	-72.48	470			270	107	SLU 48	0.23	No
fin.	3	-90	-51.72	-388			240	93	SLU 48	0.24	No
ini.	3	-223	-70.72	458			275	109	SLU 71	0.24	No
fin.	3	-125	-52.7	-387			249	98	SLU 71	0.25	No
ini.	3	-217	-69.06	451			273	108	SLU 72	0.24	No
fin.	3	-138	-54.46	-394			252	99	SLU 72	0.25	No
ini.	3	-197	-70.82	463			268	106	SLU 49	0.23	No
fin.	3	-103	-53.48	-395			243	95	SLU 49	0.24	No
ini.	3	-228	-73.2	482			277	109	SLU 70	0.23	No
fin.	3	-163	-61.22	-435			259	102	SLU 70	0.23	No

Sezione	γM	N	M	V	Vt	Vp	Vt fess. diag.	Vt,lim	Comb.	c.s.	Verifica
ini.	3	-250	-69.09	463			282	112	SLU 78	0.24	No
fin.	3	-241	-67.35	-457			280	111	SLU 78	0.24	No
ini.	3	-256	-70.75	470			284	112	SLU 77	0.24	No
fin.	3	-229	-65.59	-450			277	109	SLU 77	0.24	No

Verifiche a pressoflessione delle travi in muratura in combinazioni sismiche

Sezione	γM	N	M	Mu	Comb.	c.s.	Verifica
ini.	2	635	77.93	191.78	SLV 2	2.46	Si
fin.	2	-1000	-201.63	191.78	SLV 2	0.95	No
ini.	2	-1154	-143.98	191.78	SLV 14	1.33	Si
fin.	2	238	92.75	191.78	SLV 14	2.07	Si
ini.	2	-352	-7.89	191.78	SLV 5	24.31	Si
fin.	2	-1150	-146.24	191.78	SLV 5	1.31	Si
ini.	2	635	77.93	191.78	SLV 1	2.46	Si
fin.	2	-1000	-201.63	191.78	SLV 1	0.95	No
ini.	2	-1154	-143.98	191.78	SLV 13	1.33	Si
fin.	2	238	92.75	191.78	SLV 13	2.07	Si
ini.	2	943	84.92	191.78	SLV 3	2.26	Si
fin.	2	-499	-160.79	191.78	SLV 3	1.19	Si
ini.	2	-845	-137	191.78	SLV 15	1.4	Si
fin.	2	739	133.58	191.78	SLV 15	1.44	Si
ini.	2	-352	-7.89	191.78	SLV 6	24.31	Si
fin.	2	-1150	-146.24	191.78	SLV 6	1.31	Si
ini.	2	-845	-137	191.78	SLV 16	1.4	Si
fin.	2	739	133.58	191.78	SLV 16	1.44	Si
ini.	2	943	84.92	191.78	SLV 4	2.26	Si
fin.	2	-499	-160.79	191.78	SLV 4	1.19	Si

Verifiche a taglio delle travi in muratura secondo §C8.7.1.3.1 in combinazioni sismiche

Sezione	γM	N	M	V	Vt	Vp	Vt fess. diag.	Vt,lim	Comb.	c.s.	Verifica
ini.	2	635	77.93	-181			323	0	SLV 2	0	No
fin.	2	-1000	-201.63	-637			590	224	SLV 2	0.35	No
ini.	2	943	84.92	-375			323	0	SLV 4	0	No
fin.	2	-499	-160.79	-840			457	180	SLV 4	0.21	No
ini.	2	677	15.4	-256			323	0	SLV 8	0	No
fin.	2	518	-10.11	-723			323	0	SLV 8	0	No
ini.	2	635	77.93	-181			323	0	SLV 1	0	No
fin.	2	-1000	-201.63	-637			590	224	SLV 1	0.35	No
ini.	2	141	-51.18	39			323	99	SLV 12	2.53	Si
fin.	2	889	78.2	-419			323	0	SLV 12	0	No
ini.	2	-845	-137	610			549	211	SLV 16	0.35	No
fin.	2	739	133.58	173			323	0	SLV 16	0	No
ini.	2	677	15.4	-256			323	0	SLV 7	0	No
fin.	2	518	-10.11	-723			323	0	SLV 7	0	No
ini.	2	-845	-137	610			549	211	SLV 15	0.35	No
fin.	2	739	133.58	173			323	0	SLV 15	0	No
ini.	2	141	-51.18	39			323	99	SLV 11	2.53	Si
fin.	2	889	78.2	-419			323	0	SLV 11	0	No
ini.	2	943	84.92	-375			323	0	SLV 3	0	No
fin.	2	-499	-160.79	-840			457	180	SLV 3	0.21	No

Tabella dei coefficienti di sicurezza minimi

Stato limite	Coeff.s.	Comb.	Verifica
PF_SLV	0.951	SLV 1	No
V_SLV	0	SLV 1	No
PF_SLU	1.708	SLU 69	Si
V_SLU	0.225	SLU 69	No

Trave di accoppiamento 147

Verifiche condotte secondo D.M. 17-01-18 (N.T.C.)

Dati geometrici

X ini.	Y ini.	Z ini.inf.	Z ini.sup.	H ini.	X fin.	Y fin.	Z fin.inf.	Z fin.sup	H fin.	Luce	Spessore	R. Trazione
-21.517	-3.183	12.05	12.95	0.9	-22.517	-3.183	12.05	12.95	0.9	1	0.28	30000

Caratteristiche del materiale

(Circolare 7 21-01-19 C8.5.I) Muratura in mattoni pieni e malta di calce LC2_Corti

fb_	fhk	fvk0	fhmedio	τ0	fv0	μ	ϕ	fvk,lim	E	G	FC
120000			172500	9000	20000	0.577	0.767	6500	320000000	128000000	1.2

Verifiche a pressoflessione delle travi in muratura in combinazioni non sismiche

Sezione	γM	N	M	Mu	Comb.	c.s.	Verifica
ini.	3	-523	204.89	1150.68	SLU 84	5.62	Si
fin.	3	110	-71.07	1150.68	SLU 84	16.19	Si
ini.	3	-577	193.33	1150.68	SLU 60	5.95	Si
fin.	3	55	-67.41	1150.68	SLU 60	17.07	Si
ini.	3	-546	201.04	1150.68	SLU 74	5.72	Si
fin.	3	87	-64.95	1150.68	SLU 74	17.72	Si
ini.	3	-530	195.22	1150.68	SLU 40	5.89	Si
fin.	3	122	-82.36	1150.68	SLU 40	13.97	Si
ini.	3	-610	201.93	1150.68	SLU 39	5.7	Si
fin.	3	78	-86.17	1150.68	SLU 39	13.35	Si
ini.	3	-603	211.59	1150.68	SLU 83	5.44	Si
fin.	3	67	-74.88	1150.68	SLU 83	15.37	Si
ini.	3	-592	217.65	1150.68	SLU 82	5.29	Si

Sezione	γM	N	M	Mu	Comb.	c.s.	Verifica
fin.	3	119	-82.88	1150.68	SLU 82	13.88	Si
ini.	3	-466	194.33	1150.68	SLU 75	5.92	Si
fin.	3	131	-61.14	1150.68	SLU 75	18.82	Si
ini.	3	-671	224.36	1150.68	SLU 81	5.13	Si
fin.	3	76	-86.68	1150.68	SLU 81	13.27	Si
ini.	3	-478	194.99	1150.68	SLU 73	5.9	Si
fin.	3	135	-67.4	1150.68	SLU 73	17.07	Si

Verifiche a taglio delle travi in muratura secondo §C8.7.1.3.1 in combinazioni non sismiche

Sezione	γM	N	M	V	Vt	Vp	Vt fess. diag.	Vt,lim	Comb.	c.s.	Verifica
ini.	3	-592	217.65	-747			1087	429	SLU 82	0.57	No
fin.	3	119	-82.88	-604			873	305	SLU 82	0.5	No
ini.	3	-404	158.58	-750			1019	400	SLU 66	0.53	No
fin.	3	58	-34.74	-259			873	317	SLU 66	1.22	Si
ini.	3	-671	224.36	-778			1115	441	SLU 81	0.57	No
fin.	3	76	-86.68	-624			873	314	SLU 81	0.5	No
ini.	3	-610	201.93	-625			1093	432	SLU 39	0.69	No
fin.	3	78	-86.17	-617			873	313	SLU 39	0.51	No
ini.	3	-451	170.01	-758			1036	408	SLU 53	0.54	No
fin.	3	66	-45.67	-329			873	315	SLU 53	0.96	No
ini.	3	-530	195.22	-594			1064	420	SLU 40	0.71	No
fin.	3	122	-82.36	-597			873	304	SLU 40	0.51	No
ini.	3	-546	201.04	-788			1070	422	SLU 74	0.54	No
fin.	3	87	-64.95	-468			873	311	SLU 74	0.67	No
ini.	3	-230	120.84	-690			956	371	SLU 46	0.54	No
fin.	3	80	-11.66	-101			873	313	SLU 46	3.08	Si
ini.	3	-310	127.54	-721			985	385	SLU 45	0.53	No
fin.	3	37	-15.46	-121			873	321	SLU 45	2.65	Si
ini.	3	-324	151.87	-719			990	387	SLU 67	0.54	No
fin.	3	101	-30.93	-240			873	308	SLU 67	1.29	Si

Verifiche a pressoflessione delle travi in muratura in combinazioni sismiche

Sezione	γM	N	M	Mu	Comb.	c.s.	Verifica
ini.	2	-1532	303.08	1726.01	SLV 1	5.69	Si
fin.	2	1237	-403.16	1726.01	SLV 1	4.28	Si
ini.	2	-2308	424.67	1726.01	SLV 4	4.06	Si
fin.	2	1249	-520.59	1726.01	SLV 4	3.32	Si
ini.	2	771	-40.61	1726.01	SLV 15	42.5	Si
fin.	2	-1178	327.4	1726.01	SLV 15	5.27	Si
ini.	2	-2137	403.67	1726.01	SLV 7	4.28	Si
fin.	2	413	-360.79	1726.01	SLV 7	4.78	Si
ini.	2	-2308	424.67	1726.01	SLV 3	4.06	Si
fin.	2	1249	-520.59	1726.01	SLV 3	3.32	Si
ini.	2	1547	-162.2	1726.01	SLV 13	10.64	Si
fin.	2	-1189	444.83	1726.01	SLV 13	3.88	Si
ini.	2	1547	-162.2	1726.01	SLV 14	10.64	Si
fin.	2	-1189	444.83	1726.01	SLV 14	3.88	Si
ini.	2	771	-40.61	1726.01	SLV 16	42.5	Si
fin.	2	-1178	327.4	1726.01	SLV 16	5.27	Si
ini.	2	-2137	403.67	1726.01	SLV 8	4.28	Si
fin.	2	413	-360.79	1726.01	SLV 8	4.78	Si
ini.	2	-1532	303.08	1726.01	SLV 2	5.69	Si
fin.	2	1237	-403.16	1726.01	SLV 2	4.28	Si

Verifiche a taglio delle travi in muratura secondo §C8.7.1.3.1 in combinazioni sismiche

Sezione	γM	N	M	V	Vt	Vp	Vt fess. diag.	Vt,lim	Comb.	c.s.	Verifica
ini.	2	1376	-141.2	800			1310	0	SLV 10	0	No
fin.	2	-354	285.04	1184			1438	558	SLV 10	0.47	No
ini.	2	-1532	303.08	-1789			1861	734	SLV 2	0.41	No
fin.	2	1237	-403.16	-1675			1310	67	SLV 2	0.04	No
ini.	2	-1532	303.08	-1789			1861	734	SLV 1	0.41	No
fin.	2	1237	-403.16	-1675			1310	67	SLV 1	0.04	No
ini.	2	1376	-141.2	800			1310	0	SLV 9	0	No
fin.	2	-354	285.04	1184			1438	558	SLV 9	0.47	No
ini.	2	-2308	424.67	-2336			2141	830	SLV 4	0.36	No
fin.	2	1249	-520.59	-2250			1310	47	SLV 4	0.02	No
ini.	2	1547	-162.2	1213			1310	0	SLV 13	0	No
fin.	2	-1189	444.83	1690			1738	687	SLV 13	0.41	No
ini.	2	1547	-162.2	1213			1310	0	SLV 14	0	No
fin.	2	-1189	444.83	1690			1738	687	SLV 14	0.41	No
ini.	2	-2137	403.67	-1923			2079	810	SLV 8	0.42	No
fin.	2	413	-360.79	-1744			1310	404	SLV 8	0.23	No
ini.	2	-2137	403.67	-1923			2079	810	SLV 7	0.42	No
fin.	2	413	-360.79	-1744			1310	404	SLV 7	0.23	No
ini.	2	-2308	424.67	-2336			2141	830	SLV 3	0.36	No
fin.	2	1249	-520.59	-2250			1310	47	SLV 3	0.02	No

Tabella dei coefficienti di sicurezza minimi

Stato limite	Coeff.s.	Comb.	Verifica
PF_SLV	3.315	SLV 3	Si
V_SLV	0	SLV 9	No
PF_SLU	5.129	SLU 81	Si
V_SLU	0.503	SLU 81	No

Trave di accoppiamento 148

Verifiche condotte secondo D.M. 17-01-18 (N.T.C.)

Dati geometrici

X ini.	Y ini.	Z ini.inf.	Z ini.sup.	H ini.	X fin.	Y fin.	Z fin.inf.	Z fin.sup	H fin.	Luce	Spessore	R. Trazione
-21.517	-3.183	14.85	15.15	0.3	-22.517	-3.183	14.85	15.15	0.3	1	0.28	30000

Caratteristiche del materiale

(Circolare 7 21-01-19 C8.5.I) Muratura in mattoni pieni e malta di calce LC2_Corti

fb_	fhk	fvk0	fhmedio	τ0	fv0	μ	ϕ	fvk,lim	E	G	FC
120000			172500	9000	20000	0.577	0.767	6500	320000000	128000000	1.2

Verifiche a pressoflessione delle travi in muratura in combinazioni non sismiche

Sezione	γM	N	M	Mu	Comb.	c.s.	Verifica
ini.	3	-22	0.34	127.85	SLU 84	375.01	Si
fin.	3	-303	-50.97	127.85	SLU 84	2.51	Si
ini.	3	-38	-9.12	127.85	SLU 75	14.02	Si
fin.	3	-282	-53.88	127.85	SLU 75	2.37	Si
ini.	3	-19	1.54	127.85	SLU 60	83.05	Si
fin.	3	-300	-49.8	127.85	SLU 60	2.57	Si
ini.	3	-46	-11.06	127.85	SLU 77	11.56	Si
fin.	3	-269	-51.98	127.85	SLU 77	2.46	Si
ini.	3	-36	-12.36	127.85	SLU 78	10.35	Si
fin.	3	-241	-49.84	127.85	SLU 78	2.57	Si
ini.	3	-48	-7.82	127.85	SLU 74	16.34	Si
fin.	3	-311	-56.01	127.85	SLU 74	2.28	Si
ini.	3	-34	4.87	127.85	SLU 81	26.23	Si
fin.	3	-373	-57.14	127.85	SLU 81	2.24	Si
ini.	3	-32	1.63	127.85	SLU 83	78.22	Si
fin.	3	-331	-53.1	127.85	SLU 83	2.41	Si
ini.	3	-24	3.58	127.85	SLU 82	35.71	Si
fin.	3	-344	-55	127.85	SLU 82	2.32	Si
ini.	3	-39	7.89	127.85	SLU 39	16.21	Si
fin.	3	-360	-50.87	127.85	SLU 39	2.51	Si

Verifiche a taglio delle travi in muratura secondo §C8.7.1.3.1 in combinazioni non sismiche

Sezione	γM	N	M	V	Vt	Vp	Vt fess. diag.	Vt,lim	Comb.	c.s.	Verifica
ini.	3	-20	-19.91	182			221	84	SLU 70	0.46	No
fin.	3	-129	-39.88	-261			250	98	SLU 70	0.38	No
ini.	3	-48	-7.82	130			228	88	SLU 74	0.67	No
fin.	3	-311	-56.01	-321			299	118	SLU 74	0.37	No
ini.	3	-36	-12.36	150			225	86	SLU 78	0.57	No
fin.	3	-241	-49.84	-298			280	111	SLU 78	0.37	No
ini.	3	-33	-11.16	142			225	86	SLU 53	0.6	No
fin.	3	-238	-48.67	-290			279	110	SLU 53	0.38	No
ini.	3	-46	-11.06	144			228	88	SLU 77	0.61	No
fin.	3	-269	-51.98	-305			287	114	SLU 77	0.37	No
ini.	3	-32	-15.38	162			224	86	SLU 66	0.53	No
fin.	3	-200	-46.04	-284			269	106	SLU 66	0.37	No
ini.	3	-38	-9.12	136			226	86	SLU 75	0.63	No
fin.	3	-282	-53.88	-313			291	115	SLU 75	0.37	No
ini.	3	-23	-12.45	148			222	84	SLU 54	0.57	No
fin.	3	-209	-46.54	-283			271	107	SLU 54	0.38	No
ini.	3	-30	-18.62	176			224	85	SLU 69	0.49	No
fin.	3	-158	-42.01	-269			258	101	SLU 69	0.38	No
ini.	3	-22	-16.67	169			222	84	SLU 67	0.5	No
fin.	3	-171	-43.91	-276			261	103	SLU 67	0.37	No

Verifiche a pressoflessione delle travi in muratura in combinazioni sismiche

Sezione	γM	N	M	Mu	Comb.	c.s.	Verifica
ini.	2	594	88.69	191.78	SLV 3	2.16	Si
fin.	2	-692	-136.89	191.78	SLV 3	1.4	Si
ini.	2	632	47.33	191.78	SLV 1	4.05	Si
fin.	2	-201	-98.99	191.78	SLV 1	1.94	Si
ini.	2	-614	-94.94	191.78	SLV 13	2.02	Si
fin.	2	332	68.43	191.78	SLV 13	2.8	Si
ini.	2	594	88.69	191.78	SLV 4	2.16	Si
fin.	2	-692	-136.89	191.78	SLV 4	1.4	Si
ini.	2	-614	-94.94	191.78	SLV 14	2.02	Si
fin.	2	332	68.43	191.78	SLV 14	2.8	Si
ini.	2	-133	-93.39	191.78	SLV 10	2.05	Si
fin.	2	719	54.05	191.78	SLV 10	3.55	Si
ini.	2	112	87.14	191.78	SLV 7	2.2	Si
fin.	2	-1079	-122.51	191.78	SLV 7	1.57	Si
ini.	2	-133	-93.39	191.78	SLV 9	2.05	Si
fin.	2	719	54.05	191.78	SLV 9	3.55	Si
ini.	2	632	47.33	191.78	SLV 2	4.05	Si
fin.	2	-201	-98.99	191.78	SLV 2	1.94	Si
ini.	2	112	87.14	191.78	SLV 8	2.2	Si
fin.	2	-1079	-122.51	191.78	SLV 8	1.57	Si

Verifiche a taglio delle travi in muratura secondo §C8.7.1.3.1 in combinazioni sismiche

Sezione	γM	N	M	V	Vt	Vp	Vt fess. diag.	Vt,lim	Comb.	c.s.	Verifica
ini.	2	594	88.69	-288			323	0	SLV 4	0	No
fin.	2	-692	-136.89	-567			508	198	SLV 4	0.35	No
ini.	2	-133	-93.39	383			359	140	SLV 9	0.36	No
fin.	2	719	54.05	138			323	0	SLV 9	0	No
ini.	2	241	-50.71	204			323	79	SLV 5	0.39	No
fin.	2	559	3.82	-37			323	0	SLV 5	0	No
ini.	2	-614	-94.94	441			487	191	SLV 13	0.43	No
fin.	2	332	68.43	168			323	56	SLV 13	0.33	No
ini.	2	241	-50.71	204			323	79	SLV 6	0.39	No

Sezione	γM	N	M	V	Vt	Vp	Vt fess. diag.	Vt,lim	Comb.	c.s.	Verifica
fin.	2	559	3.82	-37			323	0	SLV 6	0	No
ini.	2	594	88.69	-288			323	0	SLV 3	0	No
fin.	2	-692	-136.89	-567			508	198	SLV 3	0.35	No
ini.	2	632	47.33	-157			323	0	SLV 2	0	No
fin.	2	-201	-98.99	-417			377	148	SLV 2	0.36	No
ini.	2	632	47.33	-157			323	0	SLV 1	0	No
fin.	2	-201	-98.99	-417			377	148	SLV 1	0.36	No
ini.	2	-614	-94.94	441			487	191	SLV 14	0.43	No
fin.	2	332	68.43	168			323	56	SLV 14	0.33	No
ini.	2	-133	-93.39	383			359	140	SLV 10	0.36	No
fin.	2	719	54.05	138			323	0	SLV 10	0	No

Tabella dei coefficienti di sicurezza minimi

Stato limite	Coeff.s.	Comb.	Verifica
PF_SLV	1.401	SLV 3	Si
V_SLV	0	SLV 1	No
PF_SLU	2.238	SLU 81	Si
V_SLU	0.367	SLU 75	No

Trave di accoppiamento 149

Verifiche condotte secondo D.M. 17-01-18 (N.T.C.)

Dati geometrici

X ini.	Y ini.	Z ini.inf.	Z ini.sup.	H ini.	X fin.	Y fin.	Z fin.inf.	Z fin.sup	H fin.	Luce	Spessore	R. Trazione
-18.787	-3.183	12.05	14.05	2	-19.287	-3.183	12.05	14.05	2	0.5	0.28	30000

Caratteristiche del materiale

(Circolare 7 21-01-19 C8.5.I) Muratura in mattoni pieni e malta di calce LC2_Corti

fb_	fhk	fvk0	fhmedio	τ0	fv0	μ	ϕ	fvk,lim	E	G	FC
120000			172500	9000	20000	0.577	0.767	6500	320000000	128000000	1.2

Verifiche a pressoflessione delle travi in muratura in combinazioni non sismiche

Sezione	γM	N	M	Mu	Comb.	c.s.	Verifica
ini.	3	-787	45.16	5682.35	SLU 77	125.83	Si
fin.	3	-865	388.34	5682.35	SLU 77	14.63	Si
ini.	3	-748	17.63	5682.35	SLU 79	322.23	Si
fin.	3	-814	355.4	5682.35	SLU 79	15.99	Si
ini.	3	-850	-1.77	5682.35	SLU 75	3205.6	Si
fin.	3	-878	383.57	5682.35	SLU 75	14.81	Si
ini.	3	-823	-20.05	5682.35	SLU 84	283.35	Si
fin.	3	-852	366.34	5682.35	SLU 84	15.51	Si
ini.	3	-868	-21.17	5682.35	SLU 82	268.45	Si
fin.	3	-881	360.67	5682.35	SLU 82	15.75	Si
ini.	3	-805	-0.66	5682.35	SLU 78	8614.1	Si
fin.	3	-849	389.24	5682.35	SLU 78	14.6	Si
ini.	3	-766	-28.18	5682.35	SLU 80	201.62	Si
fin.	3	-798	356.29	5682.35	SLU 80	15.95	Si
ini.	3	-832	44.05	5682.35	SLU 74	129.01	Si
fin.	3	-894	382.67	5682.35	SLU 74	14.85	Si
ini.	3	-805	25.76	5682.35	SLU 83	220.55	Si
fin.	3	-867	365.45	5682.35	SLU 83	15.55	Si
ini.	3	-850	24.65	5682.35	SLU 81	230.51	Si
fin.	3	-897	359.78	5682.35	SLU 81	15.79	Si

Verifiche a taglio delle travi in muratura secondo §C8.7.1.3.1 in combinazioni non sismiche

Sezione	γM	N	M	V	Vt	Vp	Vt fess. diag.	Vt,lim	Comb.	c.s.	Verifica
ini.	3	-787	45.16	495			2471	968	SLU 77	1.96	Si
fin.	3	-865	388.34	1194			2503	982	SLU 77	0.82	No
ini.	3	-832	44.05	454			2489	976	SLU 74	2.15	Si
fin.	3	-894	382.67	1153			2514	987	SLU 74	0.86	No
ini.	3	-776	-22.23	412			2467	966	SLU 70	2.34	Si
fin.	3	-792	352.55	1163			2473	969	SLU 70	0.83	No
ini.	3	-805	-0.66	542			2479	971	SLU 78	1.79	Si
fin.	3	-849	389.24	1209			2496	979	SLU 78	0.81	No
ini.	3	-715	42.11	371			2442	954	SLU 56	2.57	Si
fin.	3	-779	349.16	1116			2468	966	SLU 56	0.87	No
ini.	3	-821	-23.34	372			2485	974	SLU 67	2.62	Si
fin.	3	-821	346.88	1121			2485	974	SLU 67	0.87	No
ini.	3	-732	-3.71	418			2450	958	SLU 57	2.29	Si
fin.	3	-763	350.06	1131			2462	963	SLU 57	0.85	No
ini.	3	-766	-28.18	561			2463	964	SLU 80	1.72	Si
fin.	3	-798	356.29	1120			2476	970	SLU 80	0.87	No
ini.	3	-850	-1.77	501			2497	979	SLU 75	1.95	Si
fin.	3	-878	383.57	1168			2508	984	SLU 75	0.84	No
ini.	3	-758	23.59	365			2460	962	SLU 69	2.63	Si
fin.	3	-808	351.65	1148			2480	971	SLU 69	0.85	No

Verifiche a pressoflessione delle travi in muratura in combinazioni sismiche

Sezione	γM	N	M	Mu	Comb.	c.s.	Verifica
ini.	2	-552	111.7	8523.53	SLV 11	76.31	Si
fin.	2	-731	448.73	8523.53	SLV 11	18.99	Si
ini.	2	334	187.52	8523.53	SLV 2	45.45	Si
fin.	2	362	-350.62	8523.53	SLV 2	24.31	Si
ini.	2	334	187.52	8523.53	SLV 1	45.45	Si
fin.	2	362	-350.62	8523.53	SLV 1	24.31	Si

Sezione	γM	N	M	Mu	Comb.	c.s.	Verifica
ini.	2	-1563	-186.01	8523.53	SLV 15	45.82	Si
fin.	2	-1610	827.24	8523.53	SLV 15	10.3	Si
ini.	2	-552	111.7	8523.53	SLV 12	76.31	Si
fin.	2	-731	448.73	8523.53	SLV 12	18.99	Si
ini.	2	-1563	-186.01	8523.53	SLV 16	45.82	Si
fin.	2	-1610	827.24	8523.53	SLV 16	10.3	Si
ini.	2	-1791	-296.1	8523.53	SLV 14	28.79	Si
fin.	2	-1735	804.99	8523.53	SLV 14	10.59	Si
ini.	2	-1314	-255.27	8523.53	SLV 10	33.39	Si
fin.	2	-1147	374.57	8523.53	SLV 10	22.76	Si
ini.	2	-1314	-255.27	8523.53	SLV 9	33.39	Si
fin.	2	-1147	374.57	8523.53	SLV 9	22.76	Si
ini.	2	-1791	-296.1	8523.53	SLV 13	28.79	Si
fin.	2	-1735	804.99	8523.53	SLV 13	10.59	Si

Verifiche a taglio delle travi in muratura secondo §C8.7.1.3.1 in combinazioni sismiche

Sezione	γM	N	M	V	Vt	Vp	Vt fess. diag.	Vt,lim	Comb.	c.s.	Verifica
ini.	2	562	297.61	-2074			3235	1088	SLV 3	0.52	No
fin.	2	487	-328.37	-758			3235	1106	SLV 3	1.46	Si
ini.	2	334	187.52	-2273			3235	1142	SLV 2	0.5	No
fin.	2	362	-350.62	-873			3235	1136	SLV 2	1.3	Si
ini.	2	-1791	-296.1	2561			3951	1559	SLV 13	0.61	No
fin.	2	-1735	804.99	2252			3929	1549	SLV 13	0.69	No
ini.	2	562	297.61	-2074			3235	1088	SLV 4	0.52	No
fin.	2	487	-328.37	-758			3235	1106	SLV 4	1.46	Si
ini.	2	334	187.52	-2273			3235	1142	SLV 1	0.5	No
fin.	2	362	-350.62	-873			3235	1136	SLV 1	1.3	Si
ini.	2	-552	111.7	1300			3456	1332	SLV 11	1.02	Si
fin.	2	-731	448.73	1407			3527	1367	SLV 11	0.97	No
ini.	2	-1791	-296.1	2561			3951	1559	SLV 14	0.61	No
fin.	2	-1735	804.99	2252			3929	1549	SLV 14	0.69	No
ini.	2	-1563	-186.01	2760			3860	1520	SLV 16	0.55	No
fin.	2	-1610	827.24	2367			3879	1528	SLV 16	0.65	No
ini.	2	-1563	-186.01	2760			3860	1520	SLV 15	0.55	No
fin.	2	-1610	827.24	2367			3879	1528	SLV 15	0.65	No
ini.	2	-552	111.7	1300			3456	1332	SLV 12	1.02	Si
fin.	2	-731	448.73	1407			3527	1367	SLV 12	0.97	No

Tabella dei coefficienti di sicurezza minimi

Stato limite	Coeff.s.	Comb.	Verifica
PF_SLV	10.304	SLV 15	Si
V_SLV	0.503	SLV 1	No
PF_SLU	14.599	SLU 78	Si
V_SLU	0.81	SLU 78	No

Trave di accoppiamento 150

Verifiche condotte secondo D.M. 17-01-18 (N.T.C.)

Dati geometrici

X ini.	Y ini.	Z ini.inf.	Z ini.sup.	H ini.	X fin.	Y fin.	Z fin.inf.	Z fin.sup	H fin.	Luce	Spessore	R. Trazione
-18.787	-3.183	14.85	15.15	0.3	-19.287	-3.183	14.85	15.15	0.3	0.5	0.28	30000

Caratteristiche del materiale

(Circolare 7 21-01-19 C8.5.I) Muratura in mattoni pieni e malta di calce LC2_Corti

fb_	fhk	fvk0	fhmedio	τ0	fv0	μ	ϕ	fvk,lim	E	G	FC
120000			172500	9000	20000	0.577	0.767	6500	320000000	128000000	1.2

Verifiche a pressoflessione delle travi in muratura in combinazioni non sismiche

Sezione	γM	N	M	Mu	Comb.	c.s.	Verifica
ini.	3	79	-19.06	127.85	SLU 57	6.71	Si
fin.	3	79	26.94	127.85	SLU 57	4.75	Si
ini.	3	53	-19.24	127.85	SLU 78	6.65	Si
fin.	3	53	27.86	127.85	SLU 78	4.59	Si
ini.	3	105	-17.19	127.85	SLU 59	7.44	Si
fin.	3	105	26.37	127.85	SLU 59	4.85	Si
ini.	3	138	-19.68	127.85	SLU 49	6.5	Si
fin.	3	138	27.69	127.85	SLU 49	4.62	Si
ini.	3	140	-17.98	127.85	SLU 72	7.11	Si
fin.	3	140	28.05	127.85	SLU 72	4.56	Si
ini.	3	113	-19.85	127.85	SLU 70	6.44	Si
fin.	3	113	28.62	127.85	SLU 70	4.47	Si
ini.	3	69	-20.19	127.85	SLU 69	6.33	Si
fin.	3	69	26	127.85	SLU 69	4.92	Si
ini.	3	80	-17.36	127.85	SLU 80	7.36	Si
fin.	3	80	27.29	127.85	SLU 80	4.68	Si
ini.	3	135	-14.09	127.85	SLU 68	9.07	Si
fin.	3	135	25.85	127.85	SLU 68	4.95	Si
ini.	3	165	-17.8	127.85	SLU 51	7.18	Si
fin.	3	165	27.13	127.85	SLU 51	4.71	Si

Verifiche a taglio delle travi in muratura secondo §C8.7.1.3.1 in combinazioni non sismiche

Sezione	γM	N	M	V	Vt	Vp	Vt fess. diag.	Vt,lim	Comb.	c.s.	Verifica
ini.	3	138	-19.68	144			216	58	SLU 49	0.4	No
fin.	3	138	27.69	46			216	58	SLU 49	1.27	Si
ini.	3	140	-17.98	141			216	57	SLU 72	0.41	No

Sezione	γM	N	M	V	Vt	Vp	Vt fess. diag.	Vt,lim	Comb.	c.s.	Verifica
fin.	3	140	28.05	43			216	57	SLU 72	1.34	Si
ini.	3	94	-20.02	139			216	66	SLU 48	0.47	No
fin.	3	94	25.07	41			216	66	SLU 48	1.61	Si
ini.	3	105	-17.19	136			216	64	SLU 59	0.47	No
fin.	3	105	26.37	38			216	64	SLU 59	1.69	Si
ini.	3	135	-14.09	129			216	58	SLU 68	0.45	No
fin.	3	135	25.85	31			216	58	SLU 68	1.9	Si
ini.	3	165	-17.8	139			216	52	SLU 51	0.37	No
fin.	3	165	27.13	41			216	52	SLU 51	1.28	Si
ini.	3	96	-18.32	137			216	66	SLU 71	0.48	No
fin.	3	96	25.43	38			216	66	SLU 71	1.72	Si
ini.	3	113	-19.85	146			216	63	SLU 70	0.43	No
fin.	3	113	28.62	48			216	63	SLU 70	1.31	Si
ini.	3	160	-13.92	127			216	53	SLU 47	0.42	No
fin.	3	160	24.93	29			216	53	SLU 47	1.86	Si
ini.	3	121	-18.15	134			216	61	SLU 50	0.45	No
fin.	3	121	24.5	36			216	61	SLU 50	1.69	Si

Verifiche a pressoflessione delle travi in muratura in combinazioni sismiche

Sezione	γM	N	M	Mu	Comb.	c.s.	Verifica
ini.	2	-174	-47.79	191.78	SLV 4	4.01	Si
fin.	2	-540	-60.42	191.78	SLV 4	3.17	Si
ini.	2	193	31.29	191.78	SLV 13	6.13	Si
fin.	2	560	86.56	191.78	SLV 13	2.22	Si
ini.	2	941	-22.34	191.78	SLV 9	8.59	Si
fin.	2	1048	78.34	191.78	SLV 9	2.45	Si
ini.	2	404	-64.9	191.78	SLV 2	2.96	Si
fin.	2	36	-31.92	191.78	SLV 2	6.01	Si
ini.	2	-384	48.4	191.78	SLV 15	3.96	Si
fin.	2	-16	58.06	191.78	SLV 15	3.3	Si
ini.	2	-384	48.4	191.78	SLV 16	3.96	Si
fin.	2	-16	58.06	191.78	SLV 16	3.3	Si
ini.	2	193	31.29	191.78	SLV 14	6.13	Si
fin.	2	560	86.56	191.78	SLV 14	2.22	Si
ini.	2	404	-64.9	191.78	SLV 1	2.96	Si
fin.	2	36	-31.92	191.78	SLV 1	6.01	Si
ini.	2	-174	-47.79	191.78	SLV 3	4.01	Si
fin.	2	-540	-60.42	191.78	SLV 3	3.17	Si
ini.	2	941	-22.34	191.78	SLV 10	8.59	Si
fin.	2	1048	78.34	191.78	SLV 10	2.45	Si

Verifiche a taglio delle travi in muratura secondo §C8.7.1.3.1 in combinazioni sismiche

Sezione	γM	N	M	V	Vt	Vp	Vt fess. diag.	Vt,lim	Comb.	c.s.	Verifica
ini.	2	1004	-51.19	115			323	0	SLV 6	0	No
fin.	2	891	42.8	-151			323	0	SLV 6	0	No
ini.	2	193	31.29	193			323	89	SLV 13	0.46	No
fin.	2	560	86.56	-126			323	0	SLV 13	0	No
ini.	2	193	31.29	193			323	89	SLV 14	0.46	No
fin.	2	560	86.56	-126			323	0	SLV 14	0	No
ini.	2	941	-22.34	171			323	0	SLV 10	0	No
fin.	2	1048	78.34	-198			323	0	SLV 10	0	No
ini.	2	1004	-51.19	115			323	0	SLV 5	0	No
fin.	2	891	42.8	-151			323	0	SLV 5	0	No
ini.	2	-921	5.84	-10			569	218	SLV 8	21.81	Si
fin.	2	-1028	-52.21	207			598	226	SLV 8	1.09	Si
ini.	2	941	-22.34	171			323	0	SLV 9	0	No
fin.	2	1048	78.34	-198			323	0	SLV 9	0	No
ini.	2	-921	5.84	-10			569	218	SLV 7	21.81	Si
fin.	2	-1028	-52.21	207			598	226	SLV 7	1.09	Si
ini.	2	-384	48.4	155			426	168	SLV 15	1.09	Si
fin.	2	-16	58.06	-19			328	124	SLV 15	6.67	Si
ini.	2	-384	48.4	155			426	168	SLV 16	1.09	Si
fin.	2	-16	58.06	-19			328	124	SLV 16	6.67	Si

Tabella dei coefficienti di sicurezza minimi

Stato limite	Coeff.s.	Comb.	Verifica
PF_SLV	2.216	SLV 13	Si
V_SLV	0	SLV 5	No
PF_SLU	4.468	SLU 70	Si
V_SLU	0.374	SLU 51	No

Trave di accoppiamento 151

Verifiche condotte secondo D.M. 17-01-18 (N.T.C.)

Dati geometrici

X ini.	Y ini.	Z ini.inf.	Z ini.sup.	H ini.	X fin.	Y fin.	Z fin.inf.	Z fin.sup	H fin.	Luce	Spessore	R. Trazione
-17.277	-3.183	12.05	12.95	0.9	-18.277	-3.183	12.05	12.95	0.9	1	0.28	30000

Caratteristiche del materiale

(Circolare 7 21-01-19 C8.5.I) Muratura in mattoni pieni e malta di calce LC2_Corti

fb_	fhk	fvk0	fhmedio	τ0	fv0	μ	ϕ	fvk,lim	E	G	FC
120000			172500	9000	20000	0.577	0.767	6500	320000000	128000000	1.2

Verifiche a pressoflessione delle travi in muratura in combinazioni non sismiche

Sezione	γM	N	M	Mu	Comb.	c.s.	Verifica

Sezione	γM	N	M	Mu	Comb.	c.s.	Verifica
ini.	3	185	-399.07	1150.68	SLU 81	2.88	Si
fin.	3	-894	321.33	1150.68	SLU 81	3.58	Si
ini.	3	252	-416.7	1150.68	SLU 84	2.76	Si
fin.	3	-913	329.23	1150.68	SLU 84	3.5	Si
ini.	3	290	-411.74	1150.68	SLU 76	2.79	Si
fin.	3	-932	329.39	1150.68	SLU 76	3.49	Si
ini.	3	266	-409.39	1150.68	SLU 73	2.81	Si
fin.	3	-967	335.67	1150.68	SLU 73	3.43	Si
ini.	3	286	-403.9	1150.68	SLU 80	2.85	Si
fin.	3	-863	313.65	1150.68	SLU 80	3.67	Si
ini.	3	252	-404.5	1150.68	SLU 75	2.84	Si
fin.	3	-916	327.81	1150.68	SLU 75	3.51	Si
ini.	3	233	-391.57	1150.68	SLU 77	2.94	Si
fin.	3	-828	307.35	1150.68	SLU 77	3.74	Si
ini.	3	210	-401.42	1150.68	SLU 83	2.87	Si
fin.	3	-860	315.05	1150.68	SLU 83	3.65	Si
ini.	3	228	-414.35	1150.68	SLU 82	2.78	Si
fin.	3	-947	335.51	1150.68	SLU 82	3.43	Si
ini.	3	276	-406.85	1150.68	SLU 78	2.83	Si
fin.	3	-882	321.53	1150.68	SLU 78	3.58	Si

Verifiche a taglio delle travi in muratura secondo §C8.7.1.3.1 in combinazioni non sismiche

Sezione	γM	N	M	V	Vt	Vp	Vt fess. diag.	Vt,lim	Comb.	c.s.	Verifica
ini.	3	312	-376.42	1427			873	261	SLU 68	0.18	No
fin.	3	-894	307.69	1040			1195	472	SLU 68	0.45	No
ini.	3	252	-416.7	1662			873	275	SLU 84	0.17	No
fin.	3	-913	329.23	926			1202	475	SLU 84	0.51	No
ini.	3	290	-411.74	1634			873	266	SLU 76	0.16	No
fin.	3	-932	329.39	984			1209	477	SLU 76	0.49	No
ini.	3	286	-403.9	1564			873	267	SLU 80	0.17	No
fin.	3	-863	313.65	941			1184	468	SLU 80	0.5	No
ini.	3	185	-399.07	1581			873	290	SLU 81	0.18	No
fin.	3	-894	321.33	883			1195	472	SLU 81	0.53	No
ini.	3	210	-401.42	1572			873	285	SLU 83	0.18	No
fin.	3	-860	315.05	874			1183	468	SLU 83	0.53	No
ini.	3	276	-406.85	1545			873	269	SLU 78	0.17	No
fin.	3	-882	321.53	990			1191	471	SLU 78	0.48	No
ini.	3	266	-409.39	1644			873	272	SLU 73	0.17	No
fin.	3	-967	335.67	993			1221	482	SLU 73	0.49	No
ini.	3	252	-404.5	1555			873	275	SLU 75	0.18	No
fin.	3	-916	327.81	999			1203	475	SLU 75	0.48	No
ini.	3	228	-414.35	1672			873	281	SLU 82	0.17	No
fin.	3	-947	335.51	935			1214	479	SLU 82	0.51	No

Verifiche a pressoflessione delle travi in muratura in combinazioni sismiche

Sezione	γM	N	M	Mu	Comb.	c.s.	Verifica
ini.	2	2331	-1118.02	1726.01	SLV 14	1.54	Si
fin.	2	-2361	944.31	1726.01	SLV 14	1.83	Si
ini.	2	822	-530.51	1726.01	SLV 5	3.25	Si
fin.	2	-799	307.47	1726.01	SLV 5	5.61	Si
ini.	2	-2022	583.98	1726.01	SLV 3	2.96	Si
fin.	2	1086	-499.54	1726.01	SLV 3	3.46	Si
ini.	2	-2022	583.98	1726.01	SLV 4	2.96	Si
fin.	2	1086	-499.54	1726.01	SLV 4	3.46	Si
ini.	2	822	-530.51	1726.01	SLV 6	3.25	Si
fin.	2	-799	307.47	1726.01	SLV 6	5.61	Si
ini.	2	1910	-955.44	1726.01	SLV 9	1.81	Si
fin.	2	-1721	690.81	1726.01	SLV 9	2.5	Si
ini.	2	1604	-832.45	1726.01	SLV 16	2.07	Si
fin.	2	-1988	778.26	1726.01	SLV 16	2.22	Si
ini.	2	1910	-955.44	1726.01	SLV 10	1.81	Si
fin.	2	-1721	690.81	1726.01	SLV 10	2.5	Si
ini.	2	1604	-832.45	1726.01	SLV 15	2.07	Si
fin.	2	-1988	778.26	1726.01	SLV 15	2.22	Si
ini.	2	2331	-1118.02	1726.01	SLV 13	1.54	Si
fin.	2	-2361	944.31	1726.01	SLV 13	1.83	Si

Verifiche a taglio delle travi in muratura secondo §C8.7.1.3.1 in combinazioni sismiche

Sezione	γM	N	M	V	Vt	Vp	Vt fess. diag.	Vt,lim	Comb.	c.s.	Verifica
ini.	2	2331	-1118.02	4573			1310	0	SLV 14	0	No
fin.	2	-2361	944.31	3649			2160	836	SLV 14	0.23	No
ini.	2	822	-530.51	1744			1310	291	SLV 6	0.17	No
fin.	2	-799	307.47	1573			1598	630	SLV 6	0.4	No
ini.	2	1604	-832.45	3569			1310	0	SLV 15	0	No
fin.	2	-1988	778.26	2693			2026	792	SLV 15	0.29	No
ini.	2	1910	-955.44	3590			1310	0	SLV 10	0	No
fin.	2	-1721	690.81	3046			1930	758	SLV 10	0.25	No
ini.	2	2331	-1118.02	4573			1310	0	SLV 13	0	No
fin.	2	-2361	944.31	3649			2160	836	SLV 13	0.23	No
ini.	2	-2022	583.98	-2583			2038	796	SLV 4	0.31	No
fin.	2	1086	-499.54	-2217			1310	183	SLV 4	0.08	No
ini.	2	822	-530.51	1744			1310	291	SLV 5	0.17	No
fin.	2	-799	307.47	1573			1598	630	SLV 5	0.4	No
ini.	2	1910	-955.44	3590			1310	0	SLV 9	0	No
fin.	2	-1721	690.81	3046			1930	758	SLV 9	0.25	No
ini.	2	1604	-832.45	3569			1310	0	SLV 16	0	No
fin.	2	-1988	778.26	2693			2026	792	SLV 16	0.29	No
ini.	2	-2022	583.98	-2583			2038	796	SLV 3	0.31	No
fin.	2	1086	-499.54	-2217			1310	183	SLV 3	0.08	No

Tabella dei coefficienti di sicurezza minimi

Stato limite	Coeff.s.	Comb.	Verifica
PF_SLV	1.544	SLV 13	Si
V_SLV	0	SLV 9	No
PF_SLU	2.761	SLU 84	Si
V_SLU	0.163	SLU 76	No

Trave di accoppiamento 152

Verifiche condotte secondo D.M. 17-01-18 (N.T.C.)

Dati geometrici

X ini.	Y ini.	Z ini.inf.	Z ini.sup.	H ini.	X fin.	Y fin.	Z fin.inf.	Z fin.sup	H fin.	Luce	Spessore	R. Trazione
-17.277	-3.183	14.85	15.15	0.3	-18.277	-3.183	14.85	15.15	0.3	1	0.28	30000

Caratteristiche del materiale

(Circolare 7 21-01-19 C8.5.I) Muratura in mattoni pieni e malta di calce LC2_Corti

fb_	fhk	fvk0	fhmedio	τ0	fv0	μ	ϕ	fvk,lim	E	G	FC
120000			172500	9000	20000	0.577	0.767	6500	320000000	128000000	1.2

Verifiche a pressoflessione delle travi in muratura in combinazioni non sismiche

Sezione	γM	N	M	Mu	Comb.	c.s.	Verifica
ini.	3	-46	-50.23	127.85	SLU 76	2.55	Si
fin.	3	406	29.76	127.85	SLU 76	4.3	Si
ini.	3	69	-47.33	127.85	SLU 70	2.7	Si
fin.	3	419	15.02	127.85	SLU 70	8.51	Si
ini.	3	28	-47.99	127.85	SLU 67	2.66	Si
fin.	3	381	14.79	127.85	SLU 67	8.64	Si
ini.	3	-4	-47.17	127.85	SLU 44	2.71	Si
fin.	3	398	24.14	127.85	SLU 44	5.3	Si
ini.	3	7	-50.09	127.85	SLU 68	2.55	Si
fin.	3	448	28.15	127.85	SLU 68	4.54	Si
ini.	3	-57	-47.31	127.85	SLU 52	2.7	Si
fin.	3	357	25.75	127.85	SLU 52	4.96	Si
ini.	3	-34	-50.75	127.85	SLU 65	2.52	Si
fin.	3	409	27.92	127.85	SLU 65	4.58	Si
ini.	3	-24	-48.12	127.85	SLU 75	2.66	Si
fin.	3	339	16.41	127.85	SLU 75	7.79	Si
ini.	3	17	-47.47	127.85	SLU 78	2.69	Si
fin.	3	377	16.63	127.85	SLU 78	7.69	Si
ini.	3	-87	-50.89	127.85	SLU 73	2.51	Si
fin.	3	368	29.54	127.85	SLU 73	4.33	Si

Verifiche a taglio delle travi in muratura secondo §C8.7.1.3.1 in combinazioni non sismiche

Sezione	γM	N	M	V	Vt	Vp	Vt fess. diag.	Vt,lim	Comb.	c.s.	Verifica
ini.	3	-43	-43.56	282			227	87	SLU 84	0.31	No
fin.	3	340	24.38	-14			216	0	SLU 84	0	No
ini.	3	-1	-36.78	232			216	81	SLU 38	0.35	No
fin.	3	335	22.84	3			216	0	SLU 38	0	No
ini.	3	95	-34.31	260			216	66	SLU 45	0.25	No
fin.	3	297	1.9	-115			216	0	SLU 45	0	No
ini.	3	72	-42.7	277			216	70	SLU 72	0.25	No
fin.	3	437	22.29	-20			216	0	SLU 72	0	No
ini.	3	-24	-48.12	316			222	85	SLU 75	0.27	No
fin.	3	339	16.41	-61			216	0	SLU 75	0	No
ini.	3	-4	-47.17	282			217	82	SLU 44	0.29	No
fin.	3	398	24.14	-3			216	0	SLU 44	0	No
ini.	3	37	-46.51	280			216	76	SLU 47	0.27	No
fin.	3	436	24.36	-2			216	0	SLU 47	0	No
ini.	3	58	-44.41	293			216	72	SLU 46	0.25	No
fin.	3	369	11.01	-74			216	0	SLU 46	0	No
ini.	3	136	-33.65	259			216	58	SLU 48	0.22	No
fin.	3	335	2.12	-115			216	0	SLU 48	0	No
ini.	3	-46	-50.23	303			228	88	SLU 76	0.29	No
fin.	3	406	29.76	11			216	0	SLU 76	0	No

Verifiche a pressoflessione delle travi in muratura in combinazioni sismiche

Sezione	γM	N	M	Mu	Comb.	c.s.	Verifica
ini.	2	-717	-137.56	191.78	SLV 13	1.39	Si
fin.	2	1339	180.54	191.78	SLV 13	1.06	Si
ini.	2	742	86.87	191.78	SLV 3	2.21	Si
fin.	2	-924	-161.69	191.78	SLV 3	1.19	Si
ini.	2	329	-128.1	191.78	SLV 6	1.5	Si
fin.	2	1372	59.79	191.78	SLV 6	3.21	Si
ini.	2	742	86.87	191.78	SLV 4	2.21	Si
fin.	2	-924	-161.69	191.78	SLV 4	1.19	Si
ini.	2	150	122.21	191.78	SLV 8	1.57	Si
fin.	2	-1387	-126.81	191.78	SLV 8	1.51	Si
ini.	2	-717	-137.56	191.78	SLV 14	1.39	Si
fin.	2	1339	180.54	191.78	SLV 14	1.06	Si
ini.	2	-125	-172.9	191.78	SLV 9	1.11	Si
fin.	2	1803	145.66	191.78	SLV 9	1.32	Si
ini.	2	-125	-172.9	191.78	SLV 10	1.11	Si
fin.	2	1803	145.66	191.78	SLV 10	1.32	Si
ini.	2	150	122.21	191.78	SLV 7	1.57	Si
fin.	2	-1387	-126.81	191.78	SLV 7	1.51	Si
ini.	2	329	-128.1	191.78	SLV 5	1.5	Si

Sezione	γM	N	M	Mu	Comb.	c.s.	Verifica
fin.	2	1372	59.79	191.78	SLV 5	3.21	Si

Verifiche a taglio delle travi in muratura secondo §C8.7.1.3.1 in combinazioni sismiche

Sezione	γM	N	M	V	Vt	Vp	Vt fess. diag.	Vt,lim	Comb.	c.s.	Verifica
ini.	2	-717	-137.56	794			515	200	SLV 13	0.25	No
fin.	2	1339	180.54	580			323	0	SLV 13	0	No
ini.	2	795	11.78	-341			323	0	SLV 1	0	No
fin.	2	-96	-105.71	-344			349	135	SLV 1	0.39	No
ini.	2	-125	-172.9	490			357	139	SLV 9	0.28	No
fin.	2	1803	145.66	644			323	0	SLV 9	0	No
ini.	2	329	-128.1	149			323	57	SLV 5	0.38	No
fin.	2	1372	59.79	367			323	0	SLV 5	0	No
ini.	2	742	86.87	-421			323	0	SLV 4	0	No
fin.	2	-924	-161.69	-676			570	218	SLV 4	0.32	No
ini.	2	329	-128.1	149			323	57	SLV 6	0.38	No
fin.	2	1372	59.79	367			323	0	SLV 6	0	No
ini.	2	795	11.78	-341			323	0	SLV 2	0	No
fin.	2	-96	-105.71	-344			349	135	SLV 2	0.39	No
ini.	2	742	86.87	-421			323	0	SLV 3	0	No
fin.	2	-924	-161.69	-676			570	218	SLV 3	0.32	No
ini.	2	-125	-172.9	490			357	139	SLV 10	0.28	No
fin.	2	1803	145.66	644			323	0	SLV 10	0	No
ini.	2	-717	-137.56	794			515	200	SLV 14	0.25	No
fin.	2	1339	180.54	580			323	0	SLV 14	0	No

Tabella dei coefficienti di sicurezza minimi

Stato limite	Coeff.s.	Comb.	Verifica
PF_SLV	1.062	SLV 13	Si
V_SLV	0	SLV 1	No
PF_SLU	2.512	SLU 73	Si
V_SLU	0	SLU 2	No

Trave di accoppiamento 153

Verifiche condotte secondo D.M. 17-01-18 (N.T.C.)

Dati geometrici

X ini.	Y ini.	Z ini.inf.	Z ini.sup.	H ini.	X fin.	Y fin.	Z fin.inf.	Z fin.sup	H fin.	Luce	Spessore	R. Trazione
-15.287	-3.183	14.15	15.15	1	-16.187	-3.183	14.15	15.15	1	0.9	0.28	30000

Caratteristiche del materiale

(Circolare 7 21-01-19 C8.5.I) Muratura in mattoni pieni e malta di calce LC2_Corti

fb_	fhk	fvk0	fhmedio	τ0	fv0	μ	ϕ	fvk,lim	E	G	FC
120000			172500	9000	20000	0.577	0.767	6500	320000000	128000000	1.2

Verifiche a pressoflessione delle travi in muratura in combinazioni non sismiche

Sezione	γM	N	M	Mu	Comb.	c.s.	Verifica
ini.	3	-519	-672.25	1420.59	SLU 83	2.11	Si
fin.	3	1713	578.42	1420.59	SLU 83	2.46	Si
ini.	3	-422	-652.27	1420.59	SLU 84	2.18	Si
fin.	3	1780	573.22	1420.59	SLU 84	2.48	Si
ini.	3	-485	-652.82	1420.59	SLU 82	2.18	Si
fin.	3	1734	579.18	1420.59	SLU 82	2.45	Si
ini.	3	-452	-661.39	1420.59	SLU 77	2.15	Si
fin.	3	1696	558.07	1420.59	SLU 77	2.55	Si
ini.	3	-582	-672.8	1420.59	SLU 81	2.11	Si
fin.	3	1667	584.38	1420.59	SLU 81	2.43	Si
ini.	3	-285	-620.73	1420.59	SLU 80	2.29	Si
fin.	3	1775	537.98	1420.59	SLU 80	2.64	Si
ini.	3	-418	-641.96	1420.59	SLU 75	2.21	Si
fin.	3	1718	558.83	1420.59	SLU 75	2.54	Si
ini.	3	-515	-661.94	1420.59	SLU 74	2.15	Si
fin.	3	1650	564.03	1420.59	SLU 74	2.52	Si
ini.	3	-355	-641.41	1420.59	SLU 78	2.21	Si
fin.	3	1764	552.87	1420.59	SLU 78	2.57	Si
ini.	3	-382	-640.71	1420.59	SLU 79	2.22	Si
fin.	3	1707	543.19	1420.59	SLU 79	2.62	Si

Verifiche a taglio delle travi in muratura secondo §C8.7.1.3.1 in combinazioni non sismiche

Sezione	γM	N	M	V	Vt	Vp	Vt fess. diag.	Vt,lim	Comb.	c.s.	Verifica
ini.	3	-167	-530.93	2530			1145	441	SLU 59	0.17	No
fin.	3	1592	461.75	1574			1078	0	SLU 59	0	No
ini.	3	-396	-572.15	2763			1237	484	SLU 53	0.18	No
fin.	3	1468	487.8	1599			1078	0	SLU 53	0	No
ini.	3	-463	-583	2742			1264	496	SLU 60	0.18	No
fin.	3	1484	508.15	1784			1078	0	SLU 60	0	No
ini.	3	-299	-552.17	2718			1198	466	SLU 54	0.17	No
fin.	3	1535	482.6	1555			1078	0	SLU 54	0	No
ini.	3	-237	-551.62	2701			1173	454	SLU 57	0.17	No
fin.	3	1581	476.64	1539			1078	0	SLU 57	0	No
ini.	3	-334	-571.59	2746			1212	473	SLU 56	0.17	No
fin.	3	1513	481.84	1584			1078	0	SLU 56	0	No
ini.	3	-264	-550.91	2575			1184	460	SLU 58	0.18	No
fin.	3	1524	466.96	1618			1078	0	SLU 58	0	No
ini.	3	-197	-392.69	1861			1157	447	SLU 1	0.24	No
fin.	3	1058	335.93	1113			1078	0	SLU 1	0	No

Sezione	γM	N	M	V	Vt	Vp	Vt fess. diag.	Vt,lim	Comb.	c.s.	Verifica
ini.	3	-165	-518.17	2516			1144	440	SLU 55	0.17	No
fin.	3	1591	464.24	1560			1078	0	SLU 55	0	No
ini.	3	-366	-563.03	2697			1225	479	SLU 61	0.18	No
fin.	3	1552	502.95	1740			1078	0	SLU 61	0	No

Verifiche a pressoflessione delle travi in muratura in combinazioni sismiche

Sezione	γM	N	M	Mu	Comb.	c.s.	Verifica
ini.	2	-719	-610.66	2130.88	SLV 15	3.49	Si
fin.	2	1625	1028.74	2130.88	SLV 15	2.07	Si
ini.	2	-158	-1400.78	2130.88	SLV 10	1.52	Si
fin.	2	4353	893.58	2130.88	SLV 10	2.38	Si
ini.	2	63	-1147.46	2130.88	SLV 6	1.86	Si
fin.	2	3559	449.68	2130.88	SLV 6	4.74	Si
ini.	2	-158	-1400.78	2130.88	SLV 9	1.52	Si
fin.	2	4353	893.58	2130.88	SLV 9	2.38	Si
ini.	2	-579	-1111.73	2130.88	SLV 14	1.92	Si
fin.	2	3312	1205.38	2130.88	SLV 14	1.77	Si
ini.	2	-579	-1111.73	2130.88	SLV 13	1.92	Si
fin.	2	3312	1205.38	2130.88	SLV 13	1.77	Si
ini.	2	-403	522.77	2130.88	SLV 8	4.08	Si
fin.	2	-2065	-139.12	2130.88	SLV 8	15.32	Si
ini.	2	63	-1147.46	2130.88	SLV 5	1.86	Si
fin.	2	3559	449.68	2130.88	SLV 5	4.74	Si
ini.	2	-403	522.77	2130.88	SLV 7	4.08	Si
fin.	2	-2065	-139.12	2130.88	SLV 7	15.32	Si
ini.	2	-719	-610.66	2130.88	SLV 16	3.49	Si
fin.	2	1625	1028.74	2130.88	SLV 16	2.07	Si

Verifiche a taglio delle travi in muratura secondo §C8.7.1.3.1 in combinazioni sismiche

Sezione	γM	N	M	V	Vt	Vp	Vt fess. diag.	Vt,lim	Comb.	c.s.	Verifica
ini.	2	18	233.73	-597			1617	605	SLV 4	1.01	Si
fin.	2	-1023	-450.92	-1386			2027	801	SLV 4	0.58	No
ini.	2	18	233.73	-597			1617	605	SLV 3	1.01	Si
fin.	2	-1023	-450.92	-1386			2027	801	SLV 3	0.58	No
ini.	2	-158	-1400.78	4680			1681	642	SLV 9	0.14	No
fin.	2	4353	893.58	3827			1617	0	SLV 9	0	No
ini.	2	-579	-1111.73	4709			1849	724	SLV 13	0.15	No
fin.	2	3312	1205.38	3980			1617	0	SLV 13	0	No
ini.	2	-158	-1400.78	4680			1681	642	SLV 10	0.14	No
fin.	2	4353	893.58	3827			1617	0	SLV 10	0	No
ini.	2	-719	-610.66	3504			1905	749	SLV 15	0.21	No
fin.	2	1625	1028.74	2843			1617	0	SLV 15	0	No
ini.	2	63	-1147.46	3450			1617	595	SLV 5	0.17	No
fin.	2	3559	449.68	2558			1617	0	SLV 5	0	No
ini.	2	-719	-610.66	3504			1905	749	SLV 16	0.21	No
fin.	2	1625	1028.74	2843			1617	0	SLV 16	0	No
ini.	2	63	-1147.46	3450			1617	595	SLV 6	0.17	No
fin.	2	3559	449.68	2558			1617	0	SLV 6	0	No
ini.	2	-579	-1111.73	4709			1849	724	SLV 14	0.15	No
fin.	2	3312	1205.38	3980			1617	0	SLV 14	0	No

Tabella dei coefficienti di sicurezza minimi

Stato limite	Coeff.s.	Comb.	Verifica
PF_SLV	1.521	SLV 9	Si
V_SLV	0	SLV 5	No
PF_SLU	2.111	SLU 81	Si
V_SLU	0	SLU 1	No

Trave di accoppiamento 154

Verifiche condotte secondo D.M. 17-01-18 (N.T.C.)

Dati geometrici

X ini.	Y ini.	Z ini.inf.	Z ini.sup.	H ini.	X fin.	Y fin.	Z fin.inf.	Z fin.sup	H fin.	Luce	Spessore	R. Trazione
-15.01	1.423	14.15	15.15	1	-15.01	2.223	14.15	15.15	1	0.8	0.14	30000

Caratteristiche del materiale

(Circolare 7 21-01-19 C8.5.I) Muratura in mattoni pieni e malta di calce LC2_Corti

fb_	fhk	fvk0	fhmedio	τ0	fv0	μ	ϕ	fvk,lim	E	G	FC
120000			172500	9000	20000	0.577	0.767	6500	320000000	128000000	1.2

Verifiche a pressoflessione delle travi in muratura in combinazioni non sismiche

Sezione	γM	N	M	Mu	Comb.	c.s.	Verifica
ini.	3	154	6.77	710.29	SLU 78	104.88	Si
fin.	3	154	-1068.62	710.29	SLU 78	0.66	No
ini.	3	155	9.14	710.29	SLU 79	77.71	Si
fin.	3	155	-1061.58	710.29	SLU 79	0.67	No
ini.	3	151	-5.88	710.29	SLU 70	120.89	Si
fin.	3	151	-1011.37	710.29	SLU 70	0.7	No
ini.	3	153	6.32	710.29	SLU 77	112.42	Si
fin.	3	153	-1071.88	710.29	SLU 77	0.66	No
ini.	3	153	-3.51	710.29	SLU 71	202.48	Si
fin.	3	153	-1004.33	710.29	SLU 71	0.71	No
ini.	3	147	-0.28	710.29	SLU 56	2507.19	Si
fin.	3	147	-989.73	710.29	SLU 56	0.72	No
ini.	3	133	24.64	710.29	SLU 83	28.83	Si

Sezione	γM	N	M	Mu	Comb.	c.s.	Verifica
fin.	3	133	-986.77	710.29	SLU 83	0.72	No
ini.	3	153	-3.05	710.29	SLU 72	232.61	Si
fin.	3	153	-1001.06	710.29	SLU 72	0.71	No
ini.	3	156	9.59	710.29	SLU 80	74.03	Si
fin.	3	156	-1058.32	710.29	SLU 80	0.67	No
ini.	3	151	-6.33	710.29	SLU 69	112.21	Si
fin.	3	151	-1014.63	710.29	SLU 69	0.7	No

Verifiche a taglio delle travi in muratura secondo §C8.7.1.3.1 in combinazioni non sismiche

Sezione	γM	N	M	V	Vt	Vp	Vt fess. diag.	Vt,lim	Comb.	c.s.	Verifica
ini.	3	153	6.32	-1218			539	166	SLU 77	0.14	No
fin.	3	153	-1071.88	-1484			539	166	SLU 77	0.11	No
ini.	3	151	-5.88	-1127			539	167	SLU 70	0.15	No
fin.	3	151	-1011.37	-1393			539	167	SLU 70	0.12	No
ini.	3	153	-3.51	-1121			539	166	SLU 71	0.15	No
fin.	3	153	-1004.33	-1388			539	166	SLU 71	0.12	No
ini.	3	151	-6.33	-1130			539	167	SLU 69	0.15	No
fin.	3	151	-1014.63	-1397			539	167	SLU 69	0.12	No
ini.	3	147	-0.28	-1114			539	168	SLU 56	0.15	No
fin.	3	147	-989.73	-1370			539	168	SLU 56	0.12	No
ini.	3	155	9.14	-1208			539	166	SLU 79	0.14	No
fin.	3	155	-1061.58	-1475			539	166	SLU 79	0.11	No
ini.	3	153	-3.05	-1117			539	166	SLU 72	0.15	No
fin.	3	153	-1001.06	-1384			539	166	SLU 72	0.12	No
ini.	3	156	9.59	-1205			539	166	SLU 80	0.14	No
fin.	3	156	-1058.32	-1471			539	166	SLU 80	0.11	No
ini.	3	133	24.64	-1134			539	171	SLU 83	0.15	No
fin.	3	133	-986.77	-1401			539	171	SLU 83	0.12	No
ini.	3	154	6.77	-1214			539	166	SLU 78	0.14	No
fin.	3	154	-1068.62	-1481			539	166	SLU 78	0.11	No

Verifiche a pressoflessione delle travi in muratura in combinazioni sismiche

Sezione	γM	N	M	Mu	Comb.	c.s.	Verifica
ini.	2	-18	79.02	1065.44	SLV 16	13.48	Si
fin.	2	94	-1469.5	1065.44	SLV 16	0.73	No
ini.	2	-1531	42.92	1065.44	SLV 8	24.82	Si
fin.	2	-668	-1784.33	1065.44	SLV 8	0.6	No
ini.	2	-1531	42.92	1065.44	SLV 7	24.82	Si
fin.	2	-668	-1784.33	1065.44	SLV 7	0.6	No
ini.	2	1483	-43.62	1065.44	SLV 6	24.43	Si
fin.	2	701	824.41	1065.44	SLV 6	1.29	Si
ini.	2	886	53.06	1065.44	SLV 13	20.08	Si
fin.	2	504	-686.88	1065.44	SLV 13	1.55	Si
ini.	2	886	53.06	1065.44	SLV 14	20.08	Si
fin.	2	504	-686.88	1065.44	SLV 14	1.55	Si
ini.	2	-18	79.02	1065.44	SLV 15	13.48	Si
fin.	2	94	-1469.5	1065.44	SLV 15	0.73	No
ini.	2	-1320	73.56	1065.44	SLV 12	14.48	Si
fin.	2	-537	-2060.44	1065.44	SLV 12	0.52	No
ini.	2	-1320	73.56	1065.44	SLV 11	14.48	Si
fin.	2	-537	-2060.44	1065.44	SLV 11	0.52	No
ini.	2	1483	-43.62	1065.44	SLV 5	24.43	Si
fin.	2	701	824.41	1065.44	SLV 5	1.29	Si

Verifiche a taglio delle travi in muratura secondo §C8.7.1.3.1 in combinazioni sismiche

Sezione	γM	N	M	V	Vt	Vp	Vt fess. diag.	Vt,lim	Comb.	c.s.	Verifica
ini.	2	-18	79.02	-1980			816	308	SLV 16	0.16	No
fin.	2	94	-1469.5	-2016			809	283	SLV 16	0.14	No
ini.	2	-1320	73.56	-2834			1337	517	SLV 11	0.18	No
fin.	2	-537	-2060.44	-2681			1024	405	SLV 11	0.15	No
ini.	2	-18	79.02	-1980			816	308	SLV 15	0.16	No
fin.	2	94	-1469.5	-2016			809	283	SLV 15	0.14	No
ini.	2	1695	-12.98	1024			809	0	SLV 10	0	No
fin.	2	831	548.3	504			809	0	SLV 10	0	No
ini.	2	886	53.06	-822			809	0	SLV 13	0	No
fin.	2	504	-686.88	-1061			809	161	SLV 13	0.15	No
ini.	2	1483	-43.62	1449			809	0	SLV 5	0	No
fin.	2	701	824.41	890			809	0	SLV 5	0	No
ini.	2	-1320	73.56	-2834			1337	517	SLV 12	0.18	No
fin.	2	-537	-2060.44	-2681			1024	405	SLV 12	0.15	No
ini.	2	1695	-12.98	1024			809	0	SLV 9	0	No
fin.	2	831	548.3	504			809	0	SLV 9	0	No
ini.	2	1483	-43.62	1449			809	0	SLV 6	0	No
fin.	2	701	824.41	890			809	0	SLV 6	0	No
ini.	2	886	53.06	-822			809	0	SLV 14	0	No
fin.	2	504	-686.88	-1061			809	161	SLV 14	0.15	No

Tabella dei coefficienti di sicurezza minimi

Stato limite	Coeff.s.	Comb.	Verifica
PF_SLV	0.517	SLV 11	No
V_SLV	0	SLV 5	No
PF_SLU	0.663	SLU 77	No
V_SLU	0.112	SLU 77	No

Trave di accoppiamento 155

Verifiche condotte secondo D.M. 17-01-18 (N.T.C.)

Dati geometrici

X ini.	Y ini.	Z ini.inf.	Z ini.sup.	H ini.	X fin.	Y fin.	Z fin.inf.	Z fin.sup	H fin.	Luce	Spessore	R. Trazione
-13.727	0	14.15	15.15	1	-13.727	1	14.15	15.15	1	1	0.28	30000

Caratteristiche del materiale

(Circolare 7 21-01-19 C8.5.I) Muratura in mattoni pieni e malta di calce LC2_Corti

fb_	fhk	fvk0	fhmedio	τ0	fv0	μ	ϕ	fvk,lim	E	G	FC
120000			172500	9000	20000	0.577	0.767	6500	320000000	128000000	1.2

Verifiche a pressoflessione delle travi in muratura in combinazioni non sismiche

Sezione	γM	N	M	Mu	Comb.	c.s.	Verifica
ini.	3	-134	-1273.19	1420.59	SLU 35	1.12	Si
fin.	3	-134	-40.02	1420.59	SLU 35	35.5	Si
ini.	3	-134	-1267.6	1420.59	SLU 56	1.12	Si
fin.	3	-134	-30.11	1420.59	SLU 56	47.18	Si
ini.	3	-151	-1391.04	1420.59	SLU 79	1.02	Si
fin.	3	-151	-34.31	1420.59	SLU 79	41.4	Si
ini.	3	-147	-1255.8	1420.59	SLU 74	1.13	Si
fin.	3	-147	-24.52	1420.59	SLU 74	57.93	Si
ini.	3	-136	-1285.86	1420.59	SLU 70	1.1	Si
fin.	3	-136	-28.74	1420.59	SLU 70	49.43	Si
ini.	3	-153	-1426.78	1420.59	SLU 77	1	No
fin.	3	-153	-38.26	1420.59	SLU 77	37.13	Si
ini.	3	-154	-1328.25	1420.59	SLU 78	1.07	Si
fin.	3	-154	-25.72	1420.59	SLU 78	55.23	Si
ini.	3	-152	-1292.51	1420.59	SLU 80	1.1	Si
fin.	3	-152	-21.77	1420.59	SLU 80	65.26	Si
ini.	3	-135	-1384.39	1420.59	SLU 69	1.03	Si
fin.	3	-135	-41.28	1420.59	SLU 69	34.41	Si
ini.	3	-133	-1348.65	1420.59	SLU 71	1.05	Si
fin.	3	-133	-37.33	1420.59	SLU 71	38.06	Si

Verifiche a taglio delle travi in muratura secondo §C8.7.1.3.1 in combinazioni non sismiche

Sezione	γM	N	M	V	Vt	Vp	Vt fess. diag.	Vt,lim	Comb.	c.s.	Verifica
ini.	3	-136	-1285.86	1564			1133	434	SLU 70	0.28	No
fin.	3	-136	-28.74	923			1133	434	SLU 70	0.47	No
ini.	3	-147	-1255.8	1538			1137	437	SLU 74	0.28	No
fin.	3	-147	-24.52	897			1137	437	SLU 74	0.49	No
ini.	3	-134	-1250.12	1532			1132	434	SLU 72	0.28	No
fin.	3	-134	-24.79	891			1132	434	SLU 72	0.49	No
ini.	3	-152	-1292.51	1578			1139	438	SLU 80	0.28	No
fin.	3	-152	-21.77	936			1139	438	SLU 80	0.47	No
ini.	3	-151	-1391.04	1664			1139	437	SLU 79	0.26	No
fin.	3	-151	-34.31	1022			1139	437	SLU 79	0.43	No
ini.	3	-153	-1426.78	1695			1139	438	SLU 77	0.26	No
fin.	3	-153	-38.26	1054			1139	438	SLU 77	0.42	No
ini.	3	-154	-1328.25	1609			1140	438	SLU 78	0.27	No
fin.	3	-154	-25.72	968			1140	438	SLU 78	0.45	No
ini.	3	-134	-1267.6	1536			1132	434	SLU 56	0.28	No
fin.	3	-134	-30.11	908			1132	434	SLU 56	0.48	No
ini.	3	-133	-1348.65	1618			1132	434	SLU 71	0.27	No
fin.	3	-133	-37.33	977			1132	434	SLU 71	0.44	No
ini.	3	-135	-1384.39	1650			1132	434	SLU 69	0.26	No
fin.	3	-135	-41.28	1009			1132	434	SLU 69	0.43	No

Verifiche a pressoflessione delle travi in muratura in combinazioni sismiche

Sezione	γM	N	M	Mu	Comb.	c.s.	Verifica
ini.	2	947	2081.43	2130.88	SLV 11	1.02	Si
fin.	2	2084	-87.97	2130.88	SLV 11	24.22	Si
ini.	2	-1136	-3584.43	2130.88	SLV 5	0.59	No
fin.	2	-2273	78.12	2130.88	SLV 5	27.28	Si
ini.	2	939	1642.09	2130.88	SLV 7	1.3	Si
fin.	2	2102	-253.68	2130.88	SLV 7	8.4	Si
ini.	2	-1128	-3145.09	2130.88	SLV 9	0.68	No
fin.	2	-2291	243.83	2130.88	SLV 9	8.74	Si
ini.	2	-1128	-3145.09	2130.88	SLV 10	0.68	No
fin.	2	-2291	243.83	2130.88	SLV 10	8.74	Si
ini.	2	-419	-2267.71	2130.88	SLV 2	0.94	No
fin.	2	-721	-231.34	2130.88	SLV 2	9.21	Si
ini.	2	-1136	-3584.43	2130.88	SLV 6	0.59	No
fin.	2	-2273	78.12	2130.88	SLV 6	27.28	Si
ini.	2	939	1642.09	2130.88	SLV 8	1.3	Si
fin.	2	2102	-253.68	2130.88	SLV 8	8.4	Si
ini.	2	-419	-2267.71	2130.88	SLV 1	0.94	No
fin.	2	-721	-231.34	2130.88	SLV 1	9.21	Si
ini.	2	947	2081.43	2130.88	SLV 12	1.02	Si
fin.	2	2084	-87.97	2130.88	SLV 12	24.22	Si

Verifiche a taglio delle travi in muratura secondo §C8.7.1.3.1 in combinazioni sismiche

Sezione	γM	N	M	V	Vt	Vp	Vt fess. diag.	Vt,lim	Comb.	c.s.	Verifica
ini.	2	-1136	-3584.43	3476			2072	819	SLV 6	0.24	No
fin.	2	-2273	78.12	3732			2527	986	SLV 6	0.26	No
ini.	2	-1136	-3584.43	3476			2072	819	SLV 5	0.24	No
fin.	2	-2273	78.12	3732			2527	986	SLV 5	0.26	No
ini.	2	-419	-2267.71	2300			1785	694	SLV 1	0.3	No
fin.	2	-721	-231.34	2084			1906	749	SLV 1	0.36	No
ini.	2	947	2081.43	-1514			1617	346	SLV 11	0.23	No
fin.	2	2084	-87.97	-2751			1617	0	SLV 11	0	No
ini.	2	947	2081.43	-1514			1617	346	SLV 12	0.23	No

Sezione	γM	N	M	V	Vt	Vp	Vt fess. diag.	Vt,lim	Comb.	c.s.	Verifica
fin.	2	2084	-87.97	-2751			1617	0	SLV 12	0	No
ini.	2	939	1642.09	-1138			1617	349	SLV 8	0.31	No
fin.	2	2102	-253.68	-2341			1617	0	SLV 8	0	No
ini.	2	939	1642.09	-1138			1617	349	SLV 7	0.31	No
fin.	2	2102	-253.68	-2341			1617	0	SLV 7	0	No
ini.	2	-419	-2267.71	2300			1785	694	SLV 2	0.3	No
fin.	2	-721	-231.34	2084			1906	749	SLV 2	0.36	No
ini.	2	-1128	-3145.09	3100			2069	818	SLV 10	0.26	No
fin.	2	-2291	243.83	3322			2534	988	SLV 10	0.3	No
ini.	2	-1128	-3145.09	3100			2069	818	SLV 9	0.26	No
fin.	2	-2291	243.83	3322			2534	988	SLV 9	0.3	No

Tabella dei coefficienti di sicurezza minimi

Stato limite	Coeff.s.	Comb.	Verifica
PF_SLV	0.594	SLV 5	No
V_SLV	0	SLV 7	No
PF_SLU	0.996	SLU 77	No
V_SLU	0.258	SLU 77	No

Trave di accoppiamento 156

Verifiche condotte secondo D.M. 17-01-18 (N.T.C.)

Dati geometrici

X ini.	Y ini.	Z ini.inf.	Z ini.sup.	H ini.	X fin.	Y fin.	Z fin.inf.	Z fin.sup	H fin.	Luce	Spessore	R. Trazione
-17.793	6.64	12.05	12.95	0.9	-16.793	6.64	12.05	12.95	0.9	1	0.28	30000

Caratteristiche del materiale

(Circolare 7 21-01-19 C8.5.I) Muratura in mattoni pieni e malta di calce LC2_Corti

fb_	fhk	fvk0	fhmedio	τ0	fv0	μ	ϕ	fvk,lim	E	G	FC
120000			172500	9000	20000	0.577	0.767	6500	320000000	128000000	1.2

Verifiche a pressoflessione delle travi in muratura in combinazioni non sismiche

Sezione	γM	N	M	Mu	Comb.	c.s.	Verifica
ini.	3	84	94.09	1150.68	SLU 75	12.23	Si
fin.	3	-55	81.32	1150.68	SLU 75	14.15	Si
ini.	3	159	84.97	1150.68	SLU 78	13.54	Si
fin.	3	-46	94.81	1150.68	SLU 78	12.14	Si
ini.	3	148	79.66	1150.68	SLU 80	14.44	Si
fin.	3	-69	96.05	1150.68	SLU 80	11.98	Si
ini.	3	60	94.45	1150.68	SLU 83	12.18	Si
fin.	3	-92	84.45	1150.68	SLU 83	13.63	Si
ini.	3	-14	103.57	1150.68	SLU 81	11.11	Si
fin.	3	-101	70.97	1150.68	SLU 81	16.21	Si
ini.	3	151	78.36	1150.68	SLU 79	14.69	Si
fin.	3	-68	96.02	1150.68	SLU 79	11.98	Si
ini.	3	-3	98.77	1150.68	SLU 73	11.65	Si
fin.	3	-87	69.1	1150.68	SLU 73	16.65	Si
ini.	3	-17	104.88	1150.68	SLU 82	10.97	Si
fin.	3	-102	71	1150.68	SLU 82	16.21	Si
ini.	3	57	95.76	1150.68	SLU 84	12.02	Si
fin.	3	-93	84.49	1150.68	SLU 84	13.62	Si
ini.	3	162	83.66	1150.68	SLU 77	13.75	Si
fin.	3	-45	94.77	1150.68	SLU 77	12.14	Si

Verifiche a taglio delle travi in muratura secondo §C8.7.1.3.1 in combinazioni non sismiche

Sezione	γM	N	M	V	Vt	Vp	Vt fess. diag.	Vt,lim	Comb.	c.s.	Verifica
ini.	3	188	51.57	-497			873	289	SLU 51	0.58	No
fin.	3	-10	83.52	530			877	331	SLU 51	0.62	No
ini.	3	189	44.18	-440			873	289	SLU 7	0.66	No
fin.	3	13	71.35	471			873	326	SLU 7	0.69	No
ini.	3	125	65.99	-523			873	303	SLU 46	0.58	No
fin.	3	4	68.78	427			873	328	SLU 46	0.77	No
ini.	3	199	56.87	-555			873	287	SLU 49	0.52	No
fin.	3	12	82.27	550			873	326	SLU 49	0.59	No
ini.	3	121	77.8	-464			873	304	SLU 67	0.66	No
fin.	3	-18	76.83	374			880	332	SLU 67	0.89	No
ini.	3	128	64.68	-521			873	303	SLU 45	0.58	No
fin.	3	5	68.75	429			873	328	SLU 45	0.76	No
ini.	3	191	50.26	-495			873	289	SLU 50	0.58	No
fin.	3	-9	83.48	532			877	330	SLU 50	0.62	No
ini.	3	199	67.38	-494			873	287	SLU 69	0.58	No
fin.	3	-8	90.29	500			876	330	SLU 69	0.66	No
ini.	3	196	68.69	-496			873	288	SLU 70	0.58	No
fin.	3	-9	90.32	498			877	330	SLU 70	0.66	No
ini.	3	202	55.56	-553			873	286	SLU 48	0.52	No
fin.	3	14	82.24	552			873	326	SLU 48	0.59	No

Verifiche a pressoflessione delle travi in muratura in combinazioni sismiche

Sezione	γM	N	M	Mu	Comb.	c.s.	Verifica
ini.	2	-2991	712.34	1726.01	SLV 14	2.42	Si
fin.	2	2088	-689.99	1726.01	SLV 14	2.5	Si
ini.	2	3031	-584.68	1726.01	SLV 3	2.95	Si
fin.	2	-2173	788.34	1726.01	SLV 3	2.19	Si
ini.	2	2452	-529.66	1726.01	SLV 1	3.26	Si
fin.	2	-2971	829.72	1726.01	SLV 1	2.08	Si

Sezione	γM	N	M	Mu	Comb.	c.s.	Verifica
ini.	2	-2411	657.32	1726.01	SLV 16	2.63	Si
fin.	2	2885	-731.38	1726.01	SLV 16	2.36	Si
ini.	2	-2411	657.32	1726.01	SLV 15	2.63	Si
fin.	2	2885	-731.38	1726.01	SLV 15	2.36	Si
ini.	2	-2991	712.34	1726.01	SLV 13	2.42	Si
fin.	2	2088	-689.99	1726.01	SLV 13	2.5	Si
ini.	2	3031	-584.68	1726.01	SLV 4	2.95	Si
fin.	2	-2173	788.34	1726.01	SLV 4	2.19	Si
ini.	2	2452	-529.66	1726.01	SLV 2	3.26	Si
fin.	2	-2971	829.72	1726.01	SLV 2	2.08	Si
ini.	2	-130	-30.77	1726.01	SLV 5	56.1	Si
fin.	2	-2131	346.1	1726.01	SLV 5	4.99	Si
ini.	2	-130	-30.77	1726.01	SLV 6	56.1	Si
fin.	2	-2131	346.1	1726.01	SLV 6	4.99	Si

Verifiche a taglio delle travi in muratura secondo §C8.7.1.3.1 in combinazioni sismiche

Sezione	γM	N	M	V	Vt	Vp	Vt fess. diag.	Vt,lim	Comb.	c.s.	Verifica
ini.	2	170	158.43	-631			1310	459	SLV 11	0.73	No
fin.	2	2046	-247.76	6			1310	0	SLV 11	0	No
ini.	2	3031	-584.68	3173			1310	0	SLV 3	0	No
fin.	2	-2173	788.34	4032			2093	814	SLV 3	0.2	No
ini.	2	1803	-214.17	1322			1310	0	SLV 7	0	No
fin.	2	528	208.16	2166			1310	376	SLV 7	0.17	No
ini.	2	1803	-214.17	1322			1310	0	SLV 8	0	No
fin.	2	528	208.16	2166			1310	376	SLV 8	0.17	No
ini.	2	2452	-529.66	2806			1310	0	SLV 2	0	No
fin.	2	-2971	829.72	3473			2380	903	SLV 2	0.26	No
ini.	2	-2991	712.34	-3704			2387	906	SLV 14	0.24	No
fin.	2	2088	-689.99	-3725			1310	0	SLV 14	0	No
ini.	2	2452	-529.66	2806			1310	0	SLV 1	0	No
fin.	2	-2971	829.72	3473			2380	903	SLV 1	0.26	No
ini.	2	170	158.43	-631			1310	459	SLV 12	0.73	No
fin.	2	2046	-247.76	6			1310	0	SLV 12	0	No
ini.	2	3031	-584.68	3173			1310	0	SLV 4	0	No
fin.	2	-2173	788.34	4032			2093	814	SLV 4	0.2	No
ini.	2	-2991	712.34	-3704			2387	906	SLV 13	0.24	No
fin.	2	2088	-689.99	-3725			1310	0	SLV 13	0	No

Tabella dei coefficienti di sicurezza minimi

Stato limite	Coeff.s.	Comb.	Verifica
PF_SLV	2.08	SLV 1	Si
V_SLV	0	SLV 1	No
PF_SLU	10.972	SLU 82	Si
V_SLU	0.517	SLU 49	No

Trave di accoppiamento 157

Verifiche condotte secondo D.M. 17-01-18 (N.T.C.)

Dati geometrici

X ini.	Y ini.	Z ini.inf.	Z ini.sup.	H ini.	X fin.	Y fin.	Z fin.inf.	Z fin.sup	H fin.	Luce	Spessore	R. Trazione
-17.793	6.64	14.85	15.15	0.3	-16.793	6.64	14.85	15.15	0.3	1	0.28	30000

Caratteristiche del materiale

(Circolare 7 21-01-19 C8.5.I) Muratura in mattoni pieni e malta di calce LC2_Corti

fb_	fhk	fvk0	fhmedio	τ0	fv0	μ	ϕ	fvk,lim	E	G	FC
120000			172500	9000	20000	0.577	0.767	6500	320000000	128000000	1.2

Verifiche a pressoflessione delle travi in muratura in combinazioni non sismiche

Sezione	γM	N	M	Mu	Comb.	c.s.	Verifica
ini.	3	-206	-77.85	127.85	SLU 79	1.64	Si
fin.	3	-253	-89.6	127.85	SLU 79	1.43	Si
ini.	3	-91	-75.58	127.85	SLU 48	1.69	Si
fin.	3	-146	-89.63	127.85	SLU 48	1.43	Si
ini.	3	-211	-82.59	127.85	SLU 78	1.55	Si
fin.	3	-276	-99.17	127.85	SLU 78	1.29	Si
ini.	3	-150	-81.9	127.85	SLU 70	1.56	Si
fin.	3	-211	-97.4	127.85	SLU 70	1.31	Si
ini.	3	-143	-82.2	127.85	SLU 69	1.56	Si
fin.	3	-201	-96.87	127.85	SLU 69	1.32	Si
ini.	3	-159	-75.97	127.85	SLU 57	1.68	Si
fin.	3	-221	-91.94	127.85	SLU 57	1.39	Si
ini.	3	-152	-76.27	127.85	SLU 56	1.68	Si
fin.	3	-212	-91.4	127.85	SLU 56	1.4	Si
ini.	3	-213	-77.55	127.85	SLU 80	1.65	Si
fin.	3	-263	-90.14	127.85	SLU 80	1.42	Si
ini.	3	-205	-82.9	127.85	SLU 77	1.54	Si
fin.	3	-267	-98.64	127.85	SLU 77	1.3	Si
ini.	3	-98	-75.28	127.85	SLU 49	1.7	Si
fin.	3	-156	-90.17	127.85	SLU 49	1.42	Si

Verifiche a taglio delle travi in muratura secondo §C8.7.1.3.1 in combinazioni non sismiche

Sezione	γM	N	M	V	Vt	Vp	Vt fess. diag.	Vt,lim	Comb.	c.s.	Verifica
ini.	3	-143	-82.2	434			254	100	SLU 69	0.23	No
fin.	3	-201	-96.87	-481			269	106	SLU 69	0.22	No
ini.	3	-211	-82.59	434			272	107	SLU 78	0.25	No

Sezione	γM	N	M	V	Vt	Vp	Vt fess. diag.	Vt,lim	Comb.	c.s.	Verifica
fin.	3	-276	-99.17	-486			289	114	SLU 78	0.24	No
ini.	3	-145	-77.16	408			254	100	SLU 71	0.24	No
fin.	3	-188	-87.83	-443			266	105	SLU 71	0.24	No
ini.	3	-152	-76.27	406			256	101	SLU 56	0.25	No
fin.	3	-212	-91.4	-454			272	108	SLU 56	0.24	No
ini.	3	-205	-82.9	435			270	107	SLU 77	0.25	No
fin.	3	-267	-98.64	-485			287	113	SLU 77	0.23	No
ini.	3	-98	-75.28	405			242	94	SLU 49	0.23	No
fin.	3	-156	-90.17	-452			257	101	SLU 49	0.22	No
ini.	3	-150	-81.9	433			256	101	SLU 70	0.23	No
fin.	3	-211	-97.4	-483			272	107	SLU 70	0.22	No
ini.	3	-159	-75.97	405			258	102	SLU 57	0.25	No
fin.	3	-221	-91.94	-456			275	109	SLU 57	0.24	No
ini.	3	-91	-75.58	406			240	93	SLU 48	0.23	No
fin.	3	-146	-89.63	-451			255	100	SLU 48	0.22	No
ini.	3	-151	-76.86	407			256	101	SLU 72	0.25	No
fin.	3	-197	-88.37	-444			268	106	SLU 72	0.24	No

Verifiche a pressoflessione delle travi in muratura in combinazioni sismiche

Sezione	γM	N	M	Mu	Comb.	c.s.	Verifica
ini.	2	-1144	-281.01	191.78	SLV 2	0.68	No
fin.	2	581	177.63	191.78	SLV 2	1.08	Si
ini.	2	600	195.39	191.78	SLV 13	0.98	No
fin.	2	-1205	-293.59	191.78	SLV 13	0.65	No
ini.	2	-418	7.47	191.78	SLV 10	25.67	Si
fin.	2	-948	-150.78	191.78	SLV 10	1.27	Si
ini.	2	-794	-262.85	191.78	SLV 4	0.73	No
fin.	2	897	196.59	191.78	SLV 4	0.98	No
ini.	2	949	213.55	191.78	SLV 15	0.9	No
fin.	2	-889	-274.64	191.78	SLV 15	0.7	No
ini.	2	949	213.55	191.78	SLV 16	0.9	No
fin.	2	-889	-274.64	191.78	SLV 16	0.7	No
ini.	2	-794	-262.85	191.78	SLV 3	0.73	No
fin.	2	897	196.59	191.78	SLV 3	0.98	No
ini.	2	600	195.39	191.78	SLV 14	0.98	No
fin.	2	-1205	-293.59	191.78	SLV 14	0.65	No
ini.	2	-418	7.47	191.78	SLV 9	25.67	Si
fin.	2	-948	-150.78	191.78	SLV 9	1.27	Si
ini.	2	-1144	-281.01	191.78	SLV 1	0.68	No
fin.	2	581	177.63	191.78	SLV 1	1.08	Si

Verifiche a taglio delle travi in muratura secondo §C8.7.1.3.1 in combinazioni sismiche

Sezione	γM	N	M	V	Vt	Vp	Vt fess. diag.	Vt,lim	Comb.	c.s.	Verifica
ini.	2	-1144	-281.01	856			629	235	SLV 1	0.27	No
fin.	2	581	177.63	411			323	0	SLV 1	0	No
ini.	2	224	-74.93	628			323	83	SLV 7	0.13	No
fin.	2	641	53.78	173			323	0	SLV 7	0	No
ini.	2	-1144	-281.01	856			629	235	SLV 2	0.27	No
fin.	2	581	177.63	411			323	0	SLV 2	0	No
ini.	2	747	67.99	196			323	0	SLV 12	0	No
fin.	2	105	-87.59	-258			323	105	SLV 12	0.41	No
ini.	2	600	195.39	-584			323	0	SLV 13	0	No
fin.	2	-1205	-293.59	-1025			645	239	SLV 13	0.23	No
ini.	2	-794	-262.85	983			535	207	SLV 3	0.21	No
fin.	2	897	196.59	533			323	0	SLV 3	0	No
ini.	2	-794	-262.85	983			535	207	SLV 4	0.21	No
fin.	2	897	196.59	533			323	0	SLV 4	0	No
ini.	2	747	67.99	196			323	0	SLV 11	0	No
fin.	2	105	-87.59	-258			323	105	SLV 11	0.41	No
ini.	2	224	-74.93	628			323	83	SLV 8	0.13	No
fin.	2	641	53.78	173			323	0	SLV 8	0	No
ini.	2	600	195.39	-584			323	0	SLV 14	0	No
fin.	2	-1205	-293.59	-1025			645	239	SLV 14	0.23	No

Tabella dei coefficienti di sicurezza minimi

Stato limite	Coeff.s.	Comb.	Verifica
PF_SLV	0.653	SLV 13	No
V_SLV	0	SLV 1	No
PF_SLU	1.289	SLU 78	Si
V_SLU	0.221	SLU 69	No

Trave di accoppiamento 158

Verifiche condotte secondo D.M. 17-01-18 (N.T.C.)

Dati geometrici

X ini.	Y ini.	Z ini.inf.	Z ini.sup.	H ini.	X fin.	Y fin.	Z fin.inf.	Z fin.sup	H fin.	Luce	Spessore	R. Trazione
-12.868	6.64	12.05	12.95	0.9	-11.868	6.64	12.05	12.95	0.9	1	0.28	30000

Caratteristiche del materiale

(Circolare 7 21-01-19 C8.5.I) Muratura in mattoni pieni e malta di calce LC2_Corti

fb_	fhk	fvk0	fhmedio	τ0	fv0	μ	ϕ	fvk,lim	E	G	FC
120000			172500	9000	20000	0.577	0.767	6500	320000000	128000000	1.2

Verifiche a pressoflessione delle travi in muratura in combinazioni non sismiche

Sezione	γM	N	M	Mu	Comb.	c.s.	Verifica

Sezione	γM	N	M	Mu	Comb.	c.s.	Verifica
ini.	3	-386	106.47	1150.68	SLU 70	10.81	Si
fin.	3	-244	6.62	1150.68	SLU 70	173.77	Si
ini.	3	-379	101.58	1150.68	SLU 75	11.33	Si
fin.	3	-215	-11.08	1150.68	SLU 75	103.84	Si
ini.	3	-379	104.98	1150.68	SLU 69	10.96	Si
fin.	3	-240	6.47	1150.68	SLU 69	177.96	Si
ini.	3	-411	111.38	1150.68	SLU 78	10.33	Si
fin.	3	-245	-3.68	1150.68	SLU 78	312.28	Si
ini.	3	-376	102.89	1150.68	SLU 57	11.18	Si
fin.	3	-231	2.01	1150.68	SLU 57	572.11	Si
ini.	3	-372	103.19	1150.68	SLU 72	11.15	Si
fin.	3	-232	5.58	1150.68	SLU 72	206.24	Si
ini.	3	-391	106.6	1150.68	SLU 79	10.79	Si
fin.	3	-230	-4.88	1150.68	SLU 79	235.64	Si
ini.	3	-405	109.89	1150.68	SLU 77	10.47	Si
fin.	3	-241	-3.84	1150.68	SLU 77	299.6	Si
ini.	3	-398	108.09	1150.68	SLU 80	10.65	Si
fin.	3	-234	-4.73	1150.68	SLU 80	243.41	Si
ini.	3	-365	101.69	1150.68	SLU 71	11.32	Si
fin.	3	-228	5.42	1150.68	SLU 71	212.18	Si

Verifiche a taglio delle travi in muratura secondo §C8.7.1.3.1 in combinazioni non sismiche

Sezione	γM	N	M	V	Vt	Vp	Vt fess. diag.	Vt,lim	Comb.	c.s.	Verifica
ini.	3	-372	103.19	-364			1007	395	SLU 72	1.08	Si
fin.	3	-232	5.58	33			957	371	SLU 72	11.38	Si
ini.	3	-350	97.98	-370			999	391	SLU 49	1.06	Si
fin.	3	-230	12.32	81			956	371	SLU 49	4.59	Si
ini.	3	-405	109.89	-369			1019	400	SLU 77	1.08	Si
fin.	3	-241	-3.84	-19			960	373	SLU 77	19.87	Si
ini.	3	-343	96.49	-366			997	390	SLU 48	1.07	Si
fin.	3	-226	12.16	82			955	370	SLU 48	4.5	Si
ini.	3	-365	101.69	-361			1005	394	SLU 71	1.09	Si
fin.	3	-228	5.42	34			956	371	SLU 71	10.87	Si
ini.	3	-379	104.98	-384			1010	396	SLU 69	1.03	Si
fin.	3	-240	6.47	50			960	373	SLU 69	7.46	Si
ini.	3	-386	106.47	-387			1012	397	SLU 70	1.03	Si
fin.	3	-244	6.62	48			961	373	SLU 70	7.7	Si
ini.	3	-336	94.7	-347			995	389	SLU 51	1.12	Si
fin.	3	-219	11.28	65			952	369	SLU 51	5.68	Si
ini.	3	-411	111.38	-372			1022	401	SLU 78	1.08	Si
fin.	3	-245	-3.68	-20			962	374	SLU 78	18.48	Si
ini.	3	-376	102.89	-355			1009	395	SLU 57	1.11	Si
fin.	3	-231	2.01	12			957	371	SLU 57	30.78	Si

Verifiche a pressoflessione delle travi in muratura in combinazioni sismiche

Sezione	γM	N	M	Mu	Comb.	c.s.	Verifica
ini.	2	-1975	919.73	1726.01	SLV 13	1.88	Si
fin.	2	1683	-838.28	1726.01	SLV 13	2.06	Si
ini.	2	1513	-794.38	1726.01	SLV 3	2.17	Si
fin.	2	-1936	820.48	1726.01	SLV 3	2.1	Si
ini.	2	-1398	873.44	1726.01	SLV 16	1.98	Si
fin.	2	2230	-872.06	1726.01	SLV 16	1.98	Si
ini.	2	-1629	390	1726.01	SLV 9	4.43	Si
fin.	2	-414	-206.48	1726.01	SLV 9	8.36	Si
ini.	2	936	-748.09	1726.01	SLV 1	2.31	Si
fin.	2	-2483	854.26	1726.01	SLV 1	2.02	Si
ini.	2	-1398	873.44	1726.01	SLV 15	1.98	Si
fin.	2	2230	-872.06	1726.01	SLV 15	1.98	Si
ini.	2	936	-748.09	1726.01	SLV 2	2.31	Si
fin.	2	-2483	854.26	1726.01	SLV 2	2.02	Si
ini.	2	-1975	919.73	1726.01	SLV 14	1.88	Si
fin.	2	1683	-838.28	1726.01	SLV 14	2.06	Si
ini.	2	1513	-794.38	1726.01	SLV 4	2.17	Si
fin.	2	-1936	820.48	1726.01	SLV 4	2.1	Si
ini.	2	-1629	390	1726.01	SLV 10	4.43	Si
fin.	2	-414	-206.48	1726.01	SLV 10	8.36	Si

Verifiche a taglio delle travi in muratura secondo §C8.7.1.3.1 in combinazioni sismiche

Sezione	γM	N	M	V	Vt	Vp	Vt fess. diag.	Vt,lim	Comb.	c.s.	Verifica
ini.	2	-1975	919.73	-3360			2021	790	SLV 14	0.24	No
fin.	2	1683	-838.28	-3421			1310	0	SLV 14	0	No
ini.	2	936	-748.09	2900			1310	250	SLV 1	0.09	No
fin.	2	-2483	854.26	3205			2204	850	SLV 1	0.27	No
ini.	2	294	235.69	-947			1310	432	SLV 12	0.46	No
fin.	2	1411	-319.08	-920			1310	0	SLV 12	0	No
ini.	2	-1398	873.44	-3258			1813	716	SLV 16	0.22	No
fin.	2	2230	-872.06	-3337			1310	0	SLV 16	0	No
ini.	2	294	235.69	-947			1310	432	SLV 11	0.46	No
fin.	2	1411	-319.08	-920			1310	0	SLV 11	0	No
ini.	2	1513	-794.38	3002			1310	0	SLV 4	0	No
fin.	2	-1936	820.48	3289			2007	785	SLV 4	0.24	No
ini.	2	-1975	919.73	-3360			2021	790	SLV 13	0.24	No
fin.	2	1683	-838.28	-3421			1310	0	SLV 13	0	No
ini.	2	1513	-794.38	3002			1310	0	SLV 3	0	No
fin.	2	-1936	820.48	3289			2007	785	SLV 3	0.24	No
ini.	2	936	-748.09	2900			1310	250	SLV 2	0.09	No
fin.	2	-2483	854.26	3205			2204	850	SLV 2	0.27	No
ini.	2	-1398	873.44	-3258			1813	716	SLV 15	0.22	No
fin.	2	2230	-872.06	-3337			1310	0	SLV 15	0	No

Tabella dei coefficienti di sicurezza minimi

Stato limite	Coeff.s.	Comb.	Verifica
PF_SLV	1.877	SLV 13	Si
V_SLV	0	SLV 3	No
PF_SLU	10.331	SLU 78	Si
V_SLU	1.026	SLU 70	Si

Trave di accoppiamento 159

Verifiche condotte secondo D.M. 17-01-18 (N.T.C.)

Dati geometrici

X ini.	Y ini.	Z ini.inf.	Z ini.sup.	H ini.	X fin.	Y fin.	Z fin.inf.	Z fin.sup	H fin.	Luce	Spessore	R. Trazione
-12.868	6.64	14.85	15.15	0.3	-11.868	6.64	14.85	15.15	0.3	1	0.28	30000

Caratteristiche del materiale

(Circolare 7 21-01-19 C8.5.I) Muratura in mattoni pieni e malta di calce LC2_Corti

fb_	fhk	fvk0	fhmedio	τ0	fv0	μ	ϕ	fvk,lim	E	G	FC
120000			172500	9000	20000	0.577	0.767	6500	320000000	128000000	1.2

Verifiche a pressoflessione delle travi in muratura in combinazioni non sismiche

Sezione	γM	N	M	Mu	Comb.	c.s.	Verifica
ini.	3	-89	-57.64	127.85	SLU 69	2.22	Si
fin.	3	-170	-72.37	127.85	SLU 69	1.77	Si
ini.	3	-87	-53.26	127.85	SLU 56	2.4	Si
fin.	3	-169	-68.23	127.85	SLU 56	1.87	Si
ini.	3	-97	-54.44	127.85	SLU 72	2.35	Si
fin.	3	-176	-69	127.85	SLU 72	1.85	Si
ini.	3	-94	-57.61	127.85	SLU 70	2.22	Si
fin.	3	-176	-72.61	127.85	SLU 70	1.76	Si
ini.	3	-92	-53.23	127.85	SLU 57	2.4	Si
fin.	3	-176	-68.47	127.85	SLU 57	1.87	Si
ini.	3	-111	-56.7	127.85	SLU 78	2.25	Si
fin.	3	-207	-74.26	127.85	SLU 78	1.72	Si
ini.	3	-106	-56.74	127.85	SLU 77	2.25	Si
fin.	3	-201	-74.02	127.85	SLU 77	1.73	Si
ini.	3	-92	-54.48	127.85	SLU 71	2.35	Si
fin.	3	-170	-68.76	127.85	SLU 71	1.86	Si
ini.	3	-114	-53.54	127.85	SLU 80	2.39	Si
fin.	3	-207	-70.66	127.85	SLU 80	1.81	Si
ini.	3	-109	-53.57	127.85	SLU 79	2.39	Si
fin.	3	-201	-70.42	127.85	SLU 79	1.82	Si

Verifiche a taglio delle travi in muratura secondo §C8.7.1.3.1 in combinazioni non sismiche

Sezione	γM	N	M	V	Vt	Vp	Vt fess. diag.	Vt,lim	Comb.	c.s.	Verifica
ini.	3	-89	-57.64	412			239	93	SLU 69	0.23	No
fin.	3	-170	-72.37	-470			261	103	SLU 69	0.22	No
ini.	3	-111	-56.7	408			245	96	SLU 78	0.24	No
fin.	3	-207	-74.26	-477			271	107	SLU 78	0.22	No
ini.	3	-92	-54.48	392			240	94	SLU 71	0.24	No
fin.	3	-170	-68.76	-448			261	103	SLU 71	0.23	No
ini.	3	-97	-54.44	391			241	94	SLU 72	0.24	No
fin.	3	-176	-69	-449			263	104	SLU 72	0.23	No
ini.	3	-94	-57.61	412			241	94	SLU 70	0.23	No
fin.	3	-176	-72.61	-471			263	104	SLU 70	0.22	No
ini.	3	-92	-53.23	384			240	94	SLU 57	0.24	No
fin.	3	-176	-68.47	-445			263	104	SLU 57	0.23	No
ini.	3	-70	-54.17	389			234	91	SLU 48	0.23	No
fin.	3	-138	-66.57	-438			253	99	SLU 48	0.23	No
ini.	3	-106	-56.74	408			244	95	SLU 77	0.23	No
fin.	3	-201	-74.02	-476			269	106	SLU 77	0.22	No
ini.	3	-87	-53.26	385			239	93	SLU 56	0.24	No
fin.	3	-169	-68.23	-444			261	103	SLU 56	0.23	No
ini.	3	-75	-54.13	389			236	91	SLU 49	0.24	No
fin.	3	-145	-66.82	-439			254	100	SLU 49	0.23	No

Verifiche a pressoflessione delle travi in muratura in combinazioni sismiche

Sezione	γM	N	M	Mu	Comb.	c.s.	Verifica
ini.	2	-905	-173.3	191.78	SLV 4	1.11	Si
fin.	2	765	119.52	191.78	SLV 4	1.6	Si
ini.	2	829	124.75	191.78	SLV 14	1.54	Si
fin.	2	-961	-189.87	191.78	SLV 14	1.01	Si
ini.	2	-905	-173.3	191.78	SLV 3	1.11	Si
fin.	2	765	119.52	191.78	SLV 3	1.6	Si
ini.	2	1134	131.28	191.78	SLV 16	1.46	Si
fin.	2	-662	-183.49	191.78	SLV 16	1.05	Si
ini.	2	829	124.75	191.78	SLV 13	1.54	Si
fin.	2	-961	-189.87	191.78	SLV 13	1.01	Si
ini.	2	-241	10.54	191.78	SLV 10	18.19	Si
fin.	2	-809	-91.26	191.78	SLV 10	2.1	Si
ini.	2	-1211	-179.83	191.78	SLV 2	1.07	Si
fin.	2	466	113.14	191.78	SLV 2	1.7	Si
ini.	2	1134	131.28	191.78	SLV 15	1.46	Si
fin.	2	-662	-183.49	191.78	SLV 15	1.05	Si
ini.	2	-241	10.54	191.78	SLV 9	18.19	Si
fin.	2	-809	-91.26	191.78	SLV 9	2.1	Si
ini.	2	-1211	-179.83	191.78	SLV 1	1.07	Si

Sezione	γM	N	M	Mu	Comb.	c.s.	Verifica
fin.	2	466	113.14	191.78	SLV 1	1.7	Si

Verifiche a taglio delle travi in muratura secondo §C8.7.1.3.1 in combinazioni sismiche

Sezione	γM	N	M	V	Vt	Vp	Vt fess. diag.	Vt,lim	Comb.	c.s.	Verifica
ini.	2	829	124.75	-435			323	0	SLV 14	0	No
fin.	2	-961	-189.87	-848			580	221	SLV 14	0.26	No
ini.	2	-1211	-179.83	771			646	240	SLV 2	0.31	No
fin.	2	466	113.14	340			323	0	SLV 2	0	No
ini.	2	777	32.28	86			323	0	SLV 12	0	No
fin.	2	186	-69.99	-345			323	91	SLV 12	0.26	No
ini.	2	-905	-173.3	817			565	216	SLV 4	0.26	No
fin.	2	765	119.52	381			323	0	SLV 4	0	No
ini.	2	829	124.75	-435			323	0	SLV 13	0	No
fin.	2	-961	-189.87	-848			580	221	SLV 13	0.26	No
ini.	2	-905	-173.3	817			565	216	SLV 3	0.26	No
fin.	2	765	119.52	381			323	0	SLV 3	0	No
ini.	2	165	-59.09	448			323	95	SLV 7	0.21	No
fin.	2	614	20.91	12			323	0	SLV 7	0	No
ini.	2	165	-59.09	448			323	95	SLV 8	0.21	No
fin.	2	614	20.91	12			323	0	SLV 8	0	No
ini.	2	-1211	-179.83	771			646	240	SLV 1	0.31	No
fin.	2	466	113.14	340			323	0	SLV 1	0	No
ini.	2	777	32.28	86			323	0	SLV 11	0	No
fin.	2	186	-69.99	-345			323	91	SLV 11	0.26	No

Tabella dei coefficienti di sicurezza minimi

Stato limite	Coeff.s.	Comb.	Verifica
PF_SLV	1.01	SLV 13	Si
V_SLV	0	SLV 1	No
PF_SLU	1.722	SLU 78	Si
V_SLU	0.219	SLU 69	No

Trave di accoppiamento 160

Verifiche condotte secondo D.M. 17-01-18 (N.T.C.)

Dati geometrici

X ini.	Y ini.	Z ini.inf.	Z ini.sup.	H ini.	X fin.	Y fin.	Z fin.inf.	Z fin.sup	H fin.	Luce	Spessore	R. Trazione
-7.943	6.64	12.05	12.95	0.9	-6.943	6.64	12.05	12.95	0.9	1	0.28	30000

Caratteristiche del materiale

(Circolare 7 21-01-19 C8.5.I) Muratura in mattoni pieni e malta di calce LC2_Corti

fb_	fhk	fvk0	fhmedio	τ0	fv0	μ	ϕ	fvk,lim	E	G	FC
120000			172500	9000	20000	0.577	0.767	6500	320000000	128000000	1.2

Verifiche a pressoflessione delle travi in muratura in combinazioni non sismiche

Sezione	γM	N	M	Mu	Comb.	c.s.	Verifica
ini.	3	198	43.09	1150.68	SLU 75	26.71	Si
fin.	3	172	97.64	1150.68	SLU 75	11.78	Si
ini.	3	171	45.84	1150.68	SLU 84	25.1	Si
fin.	3	159	97.69	1150.68	SLU 84	11.78	Si
ini.	3	117	25.45	1150.68	SLU 39	45.21	Si
fin.	3	24	98.38	1150.68	SLU 39	11.7	Si
ini.	3	162	20.87	1150.68	SLU 61	55.14	Si
fin.	3	17	105.82	1150.68	SLU 61	10.87	Si
ini.	3	160	27.88	1150.68	SLU 82	41.28	Si
fin.	3	33	115.42	1150.68	SLU 82	9.97	Si
ini.	3	163	20.83	1150.68	SLU 60	55.23	Si
fin.	3	20	104.86	1150.68	SLU 60	10.97	Si
ini.	3	116	25.49	1150.68	SLU 40	45.14	Si
fin.	3	21	99.33	1150.68	SLU 40	11.58	Si
ini.	3	161	27.84	1150.68	SLU 81	41.33	Si
fin.	3	35	114.46	1150.68	SLU 81	10.05	Si
ini.	3	168	20.15	1150.68	SLU 52	57.1	Si
fin.	3	30	99.2	1150.68	SLU 52	11.6	Si
ini.	3	165	27.16	1150.68	SLU 73	42.37	Si
fin.	3	46	108.79	1150.68	SLU 73	10.58	Si

Verifiche a taglio delle travi in muratura secondo §C8.7.1.3.1 in combinazioni non sismiche

Sezione	γM	N	M	V	Vt	Vp	Vt fess. diag.	Vt,lim	Comb.	c.s.	Verifica
ini.	3	225	59.29	-388			873	281	SLU 69	0.72	No
fin.	3	334	62.02	421			873	255	SLU 69	0.61	No
ini.	3	224	59.32	-387			873	281	SLU 70	0.73	No
fin.	3	332	62.98	423			873	256	SLU 70	0.6	No
ini.	3	227	52.31	-443			873	281	SLU 49	0.63	No
fin.	3	317	53.38	496			873	259	SLU 49	0.52	No
ini.	3	194	36.39	-277			873	288	SLU 47	1.04	Si
fin.	3	190	64.53	447			873	289	SLU 47	0.65	No
ini.	3	207	54.29	-427			873	285	SLU 50	0.67	No
fin.	3	320	45.21	424			873	259	SLU 50	0.61	No
ini.	3	206	54.33	-426			873	286	SLU 51	0.67	No
fin.	3	318	46.16	426			873	259	SLU 51	0.61	No
ini.	3	216	34.35	-295			873	283	SLU 46	0.96	No
fin.	3	190	71.11	515			873	289	SLU 46	0.56	No
ini.	3	228	52.28	-444			873	281	SLU 48	0.63	No
fin.	3	319	52.42	494			873	259	SLU 48	0.52	No

Sezione	γM	N	M	V	Vt	Vp	Vt fess. diag.	Vt,lim	Comb.	c.s.	Verifica
ini.	3	213	41.36	-239			873	284	SLU 67	1.19	Si
fin.	3	206	80.7	443			873	286	SLU 67	0.65	No
ini.	3	217	34.31	-296			873	283	SLU 45	0.96	No
fin.	3	192	70.15	513			873	289	SLU 45	0.56	No

Verifiche a pressoflessione delle travi in muratura in combinazioni sismiche

Sezione	γM	N	M	Mu	Comb.	c.s.	Verifica
ini.	2	2327	-664.95	1726.01	SLV 3	2.6	Si
fin.	2	-2444	613.97	1726.01	SLV 3	2.81	Si
ini.	2	-1376	637.93	1726.01	SLV 15	2.71	Si
fin.	2	3101	-513.32	1726.01	SLV 15	3.36	Si
ini.	2	1649	-601	1726.01	SLV 1	2.87	Si
fin.	2	-3000	657.64	1726.01	SLV 1	2.62	Si
ini.	2	-1376	637.93	1726.01	SLV 16	2.71	Si
fin.	2	3101	-513.32	1726.01	SLV 16	3.36	Si
ini.	2	1649	-601	1726.01	SLV 2	2.87	Si
fin.	2	-3000	657.64	1726.01	SLV 2	2.62	Si
ini.	2	-1550	320.5	1726.01	SLV 9	5.39	Si
fin.	2	-45	-24.14	1726.01	SLV 9	71.5	Si
ini.	2	-2055	701.89	1726.01	SLV 14	2.46	Si
fin.	2	2545	-469.64	1726.01	SLV 14	3.68	Si
ini.	2	2327	-664.95	1726.01	SLV 4	2.6	Si
fin.	2	-2444	613.97	1726.01	SLV 4	2.81	Si
ini.	2	-2055	701.89	1726.01	SLV 13	2.46	Si
fin.	2	2545	-469.64	1726.01	SLV 13	3.68	Si
ini.	2	-1550	320.5	1726.01	SLV 10	5.39	Si
fin.	2	-45	-24.14	1726.01	SLV 10	71.5	Si

Verifiche a taglio delle travi in muratura secondo §C8.7.1.3.1 in combinazioni sismiche

Sezione	γM	N	M	V	Vt	Vp	Vt fess. diag.	Vt,lim	Comb.	c.s.	Verifica
ini.	2	1649	-601	2971			1310	0	SLV 2	0	No
fin.	2	-3000	657.64	3394			2390	907	SLV 2	0.27	No
ini.	2	1649	-601	2971			1310	0	SLV 1	0	No
fin.	2	-3000	657.64	3394			2390	907	SLV 1	0.27	No
ini.	2	1823	-283.56	1343			1310	0	SLV 7	0	No
fin.	2	146	168.46	701			1310	464	SLV 7	0.66	No
ini.	2	712	107.31	-536			1310	325	SLV 11	0.61	No
fin.	2	1809	-169.72	-1079			1310	0	SLV 11	0	No
ini.	2	712	107.31	-536			1310	325	SLV 12	0.61	No
fin.	2	1809	-169.72	-1079			1310	0	SLV 12	0	No
ini.	2	2327	-664.95	3231			1310	0	SLV 3	0	No
fin.	2	-2444	613.97	3109			2190	845	SLV 3	0.27	No
ini.	2	-2055	701.89	-3291			2050	800	SLV 14	0.24	No
fin.	2	2545	-469.64	-2539			1310	0	SLV 14	0	No
ini.	2	-2055	701.89	-3291			2050	800	SLV 13	0.24	No
fin.	2	2545	-469.64	-2539			1310	0	SLV 13	0	No
ini.	2	1823	-283.56	1343			1310	0	SLV 8	0	No
fin.	2	146	168.46	701			1310	464	SLV 8	0.66	No
ini.	2	2327	-664.95	3231			1310	0	SLV 4	0	No
fin.	2	-2444	613.97	3109			2190	845	SLV 4	0.27	No

Tabella dei coefficienti di sicurezza minimi

Stato limite	Coeff.s.	Comb.	Verifica
PF_SLV	2.459	SLV 13	Si
V_SLV	0	SLV 1	No
PF_SLU	9.97	SLU 82	Si
V_SLU	0.523	SLU 49	No

Trave di accoppiamento 161

Verifiche condotte secondo D.M. 17-01-18 (N.T.C.)

Dati geometrici

X ini.	Y ini.	Z ini.inf.	Z ini.sup.	H ini.	X fin.	Y fin.	Z fin.inf.	Z fin.sup	H fin.	Luce	Spessore	R. Trazione
-7.943	6.64	14.85	15.15	0.3	-6.943	6.64	14.85	15.15	0.3	1	0.28	30000

Caratteristiche del materiale

(Circolare 7 21-01-19 C8.5.I) Muratura in mattoni pieni e malta di calce LC2_Corti

fb_	fhk	fvk0	fhmedio	τ0	fv0	μ	ϕ	fvk,lim	E	G	FC
120000			172500	9000	20000	0.577	0.767	6500	320000000	128000000	1.2

Verifiche a pressoflessione delle travi in muratura in combinazioni non sismiche

Sezione	γM	N	M	Mu	Comb.	c.s.	Verifica
ini.	3	-226	-101	127.85	SLU 77	1.27	Si
fin.	3	-139	-78.31	127.85	SLU 77	1.63	Si
ini.	3	-193	-95.16	127.85	SLU 57	1.34	Si
fin.	3	-99	-70.78	127.85	SLU 57	1.81	Si
ini.	3	-138	-93.66	127.85	SLU 49	1.37	Si
fin.	3	-48	-70.1	127.85	SLU 49	1.82	Si
ini.	3	-131	-93.23	127.85	SLU 48	1.37	Si
fin.	3	-43	-70.36	127.85	SLU 48	1.82	Si
ini.	3	-234	-101.43	127.85	SLU 78	1.26	Si
fin.	3	-143	-78.05	127.85	SLU 78	1.64	Si
ini.	3	-179	-99.93	127.85	SLU 70	1.28	Si
fin.	3	-92	-77.37	127.85	SLU 70	1.65	Si
ini.	3	-172	-99.5	127.85	SLU 69	1.28	Si

Sezione	γM	N	M	Mu	Comb.	c.s.	Verifica
fin.	3	-87	-77.63	127.85	SLU 69	1.65	Si
ini.	3	-186	-94.73	127.85	SLU 56	1.35	Si
fin.	3	-94	-71.04	127.85	SLU 56	1.8	Si
ini.	3	-250	-92.1	127.85	SLU 75	1.39	Si
fin.	3	-128	-60.07	127.85	SLU 75	2.13	Si
ini.	3	-222	-92.27	127.85	SLU 80	1.39	Si
fin.	3	-147	-73.11	127.85	SLU 80	1.75	Si

Verifiche a taglio delle travi in muratura secondo §C8.7.1.3.1 in combinazioni non sismiche

Sezione	γM	N	M	V	Vt	Vp	Vt fess. diag.	Vt,lim	Comb.	c.s.	Verifica
ini.	3	-160	-90.34	454			258	102	SLU 71	0.22	No
fin.	3	-91	-72.69	-398			240	93	SLU 71	0.23	No
ini.	3	-193	-95.16	469			267	105	SLU 57	0.22	No
fin.	3	-99	-70.78	-392			242	94	SLU 57	0.24	No
ini.	3	-179	-99.93	493			263	104	SLU 70	0.21	No
fin.	3	-92	-77.37	-422			240	94	SLU 70	0.22	No
ini.	3	-186	-94.73	468			265	105	SLU 56	0.22	No
fin.	3	-94	-71.04	-393			241	94	SLU 56	0.24	No
ini.	3	-167	-90.77	455			260	103	SLU 72	0.23	No
fin.	3	-95	-72.43	-397			241	94	SLU 72	0.24	No
ini.	3	-172	-99.5	492			261	103	SLU 69	0.21	No
fin.	3	-87	-77.63	-423			239	93	SLU 69	0.22	No
ini.	3	-226	-101	495			276	109	SLU 77	0.22	No
fin.	3	-139	-78.31	-424			253	99	SLU 77	0.23	No
ini.	3	-234	-101.43	496			278	110	SLU 78	0.22	No
fin.	3	-143	-78.05	-423			254	100	SLU 78	0.24	No
ini.	3	-131	-93.23	465			251	98	SLU 48	0.21	No
fin.	3	-43	-70.36	-393			227	87	SLU 48	0.22	No
ini.	3	-138	-93.66	466			253	99	SLU 49	0.21	No
fin.	3	-48	-70.1	-392			228	88	SLU 49	0.22	No

Verifiche a pressoflessione delle travi in muratura in combinazioni sismiche

Sezione	γM	N	M	Mu	Comb.	c.s.	Verifica
ini.	2	663	155.82	191.78	SLV 14	1.23	Si
fin.	2	-676	-214.69	191.78	SLV 14	0.89	No
ini.	2	1007	173.74	191.78	SLV 16	1.1	Si
fin.	2	-764	-270.23	191.78	SLV 16	0.71	No
ini.	2	-973	-264.19	191.78	SLV 4	0.73	No
fin.	2	572	161	191.78	SLV 4	1.19	Si
ini.	2	1007	173.74	191.78	SLV 15	1.1	Si
fin.	2	-764	-270.23	191.78	SLV 15	0.71	No
ini.	2	-1317	-282.11	191.78	SLV 1	0.68	No
fin.	2	661	216.54	191.78	SLV 1	0.89	No
ini.	2	715	41.36	191.78	SLV 12	4.64	Si
fin.	2	-400	-184.11	191.78	SLV 12	1.04	Si
ini.	2	-1317	-282.11	191.78	SLV 2	0.68	No
fin.	2	661	216.54	191.78	SLV 2	0.89	No
ini.	2	715	41.36	191.78	SLV 11	4.64	Si
fin.	2	-400	-184.11	191.78	SLV 11	1.04	Si
ini.	2	-973	-264.19	191.78	SLV 3	0.73	No
fin.	2	572	161	191.78	SLV 3	1.19	Si
ini.	2	663	155.82	191.78	SLV 13	1.23	Si
fin.	2	-676	-214.69	191.78	SLV 13	0.89	No

Verifiche a taglio delle travi in muratura secondo §C8.7.1.3.1 in combinazioni sismiche

Sezione	γM	N	M	V	Vt	Vp	Vt fess. diag.	Vt,lim	Comb.	c.s.	Verifica
ini.	2	1007	173.74	-453			323	0	SLV 16	0	No
fin.	2	-764	-270.23	-895			527	204	SLV 16	0.23	No
ini.	2	715	41.36	-104			323	0	SLV 12	0	No
fin.	2	-400	-184.11	-550			430	170	SLV 12	0.31	No
ini.	2	-1317	-282.11	983			675	248	SLV 1	0.25	No
fin.	2	661	216.54	534			323	0	SLV 1	0	No
ini.	2	-973	-264.19	882			583	222	SLV 3	0.25	No
fin.	2	572	161	432			323	0	SLV 3	0	No
ini.	2	715	41.36	-104			323	0	SLV 11	0	No
fin.	2	-400	-184.11	-550			430	170	SLV 11	0.31	No
ini.	2	-973	-264.19	882			583	222	SLV 4	0.25	No
fin.	2	572	161	432			323	0	SLV 4	0	No
ini.	2	-1317	-282.11	983			675	248	SLV 2	0.25	No
fin.	2	661	216.54	534			323	0	SLV 2	0	No
ini.	2	663	155.82	-352			323	0	SLV 13	0	No
fin.	2	-676	-214.69	-792			504	197	SLV 13	0.25	No
ini.	2	1007	173.74	-453			323	0	SLV 15	0	No
fin.	2	-764	-270.23	-895			527	204	SLV 15	0.23	No
ini.	2	663	155.82	-352			323	0	SLV 14	0	No
fin.	2	-676	-214.69	-792			504	197	SLV 14	0.25	No

Tabella dei coefficienti di sicurezza minimi

Stato limite	Coeff.s.	Comb.	Verifica
PF_SLV	0.68	SLV 1	No
V_SLV	0	SLV 1	No
PF_SLU	1.261	SLU 78	Si
V_SLU	0.209	SLU 69	No

Trave di accoppiamento 162

Verifiche condotte secondo D.M. 17-01-18 (N.T.C.)

Dati geometrici

X ini.	Y ini.	Z ini.inf.	Z ini.sup.	H ini.	X fin.	Y fin.	Z fin.inf.	Z fin.sup	H fin.	Luce	Spessore	R. Trazione
-19.8	1.141	14.15	15.15	1	-20.6	1.141	14.15	15.15	1	0.8	0.28	30000

Caratteristiche del materiale

(Circolare 7 21-01-19 C8.5.I) Muratura in mattoni pieni e malta di calce LC2_Corti

fb_	fhk	fvk0	fhmedio	τ0	fv0	μ	ϕ	fvk,lim	E	G	FC
120000			172500	9000	20000	0.577	0.767	6500	320000000	128000000	1.2

Verifiche a pressoflessione delle travi in muratura in combinazioni non sismiche

Sezione	γM	N	M	Mu	Comb.	c.s.	Verifica
ini.	3	-1627	206.65	1420.59	SLU 77	6.87	Si
fin.	3	-2863	-712.18	1420.59	SLU 77	1.99	Si
ini.	3	-1583	231.99	1420.59	SLU 83	6.12	Si
fin.	3	-2932	-742.27	1420.59	SLU 83	1.91	Si
ini.	3	-1585	203.31	1420.59	SLU 80	6.99	Si
fin.	3	-2804	-701.37	1420.59	SLU 80	2.03	Si
ini.	3	-1514	234.43	1420.59	SLU 81	6.06	Si
fin.	3	-2873	-730.9	1420.59	SLU 81	1.94	Si
ini.	3	-1558	209.09	1420.59	SLU 74	6.79	Si
fin.	3	-2804	-700.81	1420.59	SLU 74	2.03	Si
ini.	3	-1528	228.43	1420.59	SLU 82	6.22	Si
fin.	3	-2872	-725.21	1420.59	SLU 82	1.96	Si
ini.	3	-1597	225.99	1420.59	SLU 84	6.29	Si
fin.	3	-2931	-736.57	1420.59	SLU 84	1.93	Si
ini.	3	-1573	203.1	1420.59	SLU 75	6.99	Si
fin.	3	-2802	-695.12	1420.59	SLU 75	2.04	Si
ini.	3	-1570	209.3	1420.59	SLU 79	6.79	Si
fin.	3	-2806	-707.06	1420.59	SLU 79	2.01	Si
ini.	3	-1642	200.66	1420.59	SLU 78	7.08	Si
fin.	3	-2861	-706.49	1420.59	SLU 78	2.01	Si

Verifiche a taglio delle travi in muratura secondo §C8.7.1.3.1 in combinazioni non sismiche

Sezione	γM	N	M	V	Vt	Vp	Vt fess. diag.	Vt,lim	Comb.	c.s.	Verifica
ini.	3	-1573	203.1	-290			1707	665	SLU 75	2.29	Si
fin.	3	-2802	-695.12	-3104			2199	812	SLU 75	0.26	No
ini.	3	-1597	225.99	-535			1717	668	SLU 84	1.25	Si
fin.	3	-2931	-736.57	-3195			2251	826	SLU 84	0.26	No
ini.	3	-1642	200.66	-67			1735	674	SLU 78	10.11	Si
fin.	3	-2861	-706.49	-3253			2223	818	SLU 78	0.25	No
ini.	3	-1451	153.42	311			1659	649	SLU 70	2.08	Si
fin.	3	-2427	-597.82	-2911			2049	770	SLU 70	0.26	No
ini.	3	-1585	203.31	-149			1712	667	SLU 80	4.48	Si
fin.	3	-2804	-701.37	-3197			2200	812	SLU 80	0.25	No
ini.	3	-1583	231.99	-568			1712	666	SLU 83	1.17	Si
fin.	3	-2932	-742.27	-3216			2251	826	SLU 83	0.26	No
ini.	3	-1627	206.65	-100			1729	672	SLU 77	6.73	Si
fin.	3	-2863	-712.18	-3274			2224	818	SLU 77	0.25	No
ini.	3	-1558	209.09	-324			1702	663	SLU 74	2.05	Si
fin.	3	-2804	-700.81	-3126			2200	812	SLU 74	0.26	No
ini.	3	-1437	159.42	278			1653	647	SLU 69	2.32	Si
fin.	3	-2429	-603.52	-2932			2050	770	SLU 69	0.26	No
ini.	3	-1570	209.3	-182			1706	665	SLU 79	3.65	Si
fin.	3	-2806	-707.06	-3218			2200	812	SLU 79	0.25	No

Verifiche a pressoflessione delle travi in muratura in combinazioni sismiche

Sezione	γM	N	M	Mu	Comb.	c.s.	Verifica
ini.	2	983	643.82	2130.88	SLV 1	3.31	Si
fin.	2	-1685	-1082.55	2130.88	SLV 1	1.97	Si
ini.	2	904	596.91	2130.88	SLV 4	3.57	Si
fin.	2	-1026	-879.86	2130.88	SLV 4	2.42	Si
ini.	2	-2913	-378.3	2130.88	SLV 15	5.63	Si
fin.	2	-1844	180.83	2130.88	SLV 15	11.78	Si
ini.	2	-2913	-378.3	2130.88	SLV 16	5.63	Si
fin.	2	-1844	180.83	2130.88	SLV 16	11.78	Si
ini.	2	-1407	64.67	2130.88	SLV 10	32.95	Si
fin.	2	-2987	-629.57	2130.88	SLV 10	3.38	Si
ini.	2	-262	357.24	2130.88	SLV 6	5.96	Si
fin.	2	-2741	-947.78	2130.88	SLV 6	2.25	Si
ini.	2	983	643.82	2130.88	SLV 2	3.31	Si
fin.	2	-1685	-1082.55	2130.88	SLV 2	1.97	Si
ini.	2	904	596.91	2130.88	SLV 3	3.57	Si
fin.	2	-1026	-879.86	2130.88	SLV 3	2.42	Si
ini.	2	-1407	64.67	2130.88	SLV 9	32.95	Si
fin.	2	-2987	-629.57	2130.88	SLV 9	3.38	Si
ini.	2	-262	357.24	2130.88	SLV 5	5.96	Si
fin.	2	-2741	-947.78	2130.88	SLV 5	2.25	Si

Verifiche a taglio delle travi in muratura secondo §C8.7.1.3.1 in combinazioni sismiche

Sezione	γM	N	M	V	Vt	Vp	Vt fess. diag.	Vt,lim	Comb.	c.s.	Verifica
ini.	2	904	596.91	-2063			1617	362	SLV 3	0.18	No
fin.	2	-1026	-879.86	-3827			2028	801	SLV 3	0.21	No
ini.	2	983	643.82	-2758			1617	332	SLV 1	0.12	No
fin.	2	-1685	-1082.55	-4536			2292	904	SLV 1	0.2	No
ini.	2	-2913	-378.3	2260			2783	1068	SLV 15	0.47	No
fin.	2	-1844	180.83	542			2355	927	SLV 15	1.71	Si
ini.	2	904	596.91	-2063			1617	362	SLV 4	0.18	No
fin.	2	-1026	-879.86	-3827			2028	801	SLV 4	0.21	No
ini.	2	983	643.82	-2758			1617	332	SLV 2	0.12	No

Sezione	γM	N	M	V	Vt	Vp	Vt fess. diag.	Vt,lim	Comb.	c.s.	Verifica
fin.	2	-1685	-1082.55	-4536			2292	904	SLV 2	0.2	No
ini.	2	-262	357.24	-2057			1722	663	SLV 6	0.32	No
fin.	2	-2741	-947.78	-3835			2714	1047	SLV 6	0.27	No
ini.	2	-262	357.24	-2057			1722	663	SLV 5	0.32	No
fin.	2	-2741	-947.78	-3835			2714	1047	SLV 5	0.27	No
ini.	2	-1407	64.67	-760			2180	862	SLV 10	1.13	Si
fin.	2	-2987	-629.57	-2525			2812	1077	SLV 10	0.43	No
ini.	2	-2913	-378.3	2260			2783	1068	SLV 16	0.47	No
fin.	2	-1844	180.83	542			2355	927	SLV 16	1.71	Si
ini.	2	-1407	64.67	-760			2180	862	SLV 9	1.13	Si
fin.	2	-2987	-629.57	-2525			2812	1077	SLV 9	0.43	No

Tabella dei coefficienti di sicurezza minimi

Stato limite	Coeff.s.	Comb.	Verifica
PF_SLV	1.968	SLV 1	Si
V_SLV	0.12	SLV 1	No
PF_SLU	1.914	SLU 83	Si
V_SLU	0.25	SLU 77	No

Trave di accoppiamento 163

Verifiche condotte secondo D.M. 17-01-18 (N.T.C.)

Dati geometrici

X ini.	Y ini.	Z ini.inf.	Z ini.sup.	H ini.	X fin.	Y fin.	Z fin.inf.	Z fin.sup	H fin.	Luce	Spessore	R. Trazione
-11.865	1.141	14.55	15.15	0.6	-12.865	1.141	14.55	15.15	0.6	1	0.28	30000

Caratteristiche del materiale

(Circolare 7 21-01-19 C8.5.I) Muratura in mattoni pieni e malta di calce LC2_Corti

fb_	fhk	fvk0	fhmedio	τ0	fv0	μ	ϕ	fvk,lim	E	G	FC
120000			172500	9000	20000	0.577	0.767	6500	320000000	128000000	1.2

Verifiche a pressoflessione delle travi in muratura in combinazioni non sismiche

Sezione	γM	N	M	Mu	Comb.	c.s.	Verifica
ini.	3	-2273	-355.69	511.41	SLU 70	1.44	Si
fin.	3	-1672	-97.92	511.41	SLU 70	5.22	Si
ini.	3	-2385	-365.19	511.41	SLU 74	1.4	Si
fin.	3	-1684	-60.02	511.41	SLU 74	8.52	Si
ini.	3	-2431	-365.99	511.41	SLU 75	1.4	Si
fin.	3	-1736	-64.23	511.41	SLU 75	7.96	Si
ini.	3	-2501	-377.05	511.41	SLU 79	1.36	Si
fin.	3	-1812	-81.2	511.41	SLU 79	6.3	Si
ini.	3	-2518	-370.13	511.41	SLU 84	1.38	Si
fin.	3	-1796	-56.6	511.41	SLU 84	9.04	Si
ini.	3	-2473	-369.33	511.41	SLU 83	1.38	Si
fin.	3	-1743	-52.4	511.41	SLU 83	9.76	Si
ini.	3	-2553	-386.42	511.41	SLU 77	1.32	Si
fin.	3	-1853	-85.15	511.41	SLU 77	6.01	Si
ini.	3	-2598	-387.22	511.41	SLU 78	1.32	Si
fin.	3	-1905	-89.35	511.41	SLU 78	5.72	Si
ini.	3	-2546	-377.85	511.41	SLU 80	1.35	Si
fin.	3	-1865	-85.4	511.41	SLU 80	5.99	Si
ini.	3	-2409	-357.15	511.41	SLU 76	1.43	Si
fin.	3	-1731	-63.08	511.41	SLU 76	8.11	Si

Verifiche a taglio delle travi in muratura secondo §C8.7.1.3.1 in combinazioni non sismiche

Sezione	γM	N	M	V	Vt	Vp	Vt fess. diag.	Vt,lim	Comb.	c.s.	Verifica
ini.	3	-1901	-316.35	1457			938	340	SLU 48	0.23	No
fin.	3	-1382	-93.41	-643			800	302	SLU 48	0.47	No
ini.	3	-2546	-377.85	1635			1110	382	SLU 80	0.23	No
fin.	3	-1865	-85.4	-570			929	338	SLU 80	0.59	No
ini.	3	-2221	-346.31	1546			1024	362	SLU 72	0.23	No
fin.	3	-1631	-93.98	-625			866	321	SLU 72	0.51	No
ini.	3	-2228	-354.89	1596			1025	362	SLU 69	0.23	No
fin.	3	-1619	-93.72	-643			863	320	SLU 69	0.5	No
ini.	3	-2553	-386.42	1685			1112	383	SLU 77	0.23	No
fin.	3	-1853	-85.15	-588			925	337	SLU 77	0.57	No
ini.	3	-2501	-377.05	1640			1098	379	SLU 79	0.23	No
fin.	3	-1812	-81.2	-563			915	334	SLU 79	0.59	No
ini.	3	-2598	-387.22	1680			1124	385	SLU 78	0.23	No
fin.	3	-1905	-89.35	-595			939	341	SLU 78	0.57	No
ini.	3	-2226	-347.89	1546			1025	362	SLU 56	0.23	No
fin.	3	-1615	-84.84	-588			862	320	SLU 56	0.54	No
ini.	3	-2176	-345.51	1551			1012	359	SLU 71	0.23	No
fin.	3	-1579	-89.77	-618			852	317	SLU 71	0.51	No
ini.	3	-2273	-355.69	1591			1038	365	SLU 70	0.23	No
fin.	3	-1672	-97.92	-650			877	324	SLU 70	0.5	No

Verifiche a pressoflessione delle travi in muratura in combinazioni sismiche

Sezione	γM	N	M	Mu	Comb.	c.s.	Verifica
ini.	2	995	641.39	767.12	SLV 1	1.2	Si
fin.	2	-2290	-846.73	767.12	SLV 1	0.91	No
ini.	2	-3274	-1060.16	767.12	SLV 13	0.72	No
fin.	2	833	792.62	767.12	SLV 13	0.97	No
ini.	2	-3870	-1108.7	767.12	SLV 15	0.69	No
fin.	2	353	790.97	767.12	SLV 15	0.97	No

Sezione	γM	N	M	Mu	Comb.	c.s.	Verifica
ini.	2	-3870	-1108.7	767.12	SLV 16	0.69	No
fin.	2	353	790.97	767.12	SLV 16	0.97	No
ini.	2	399	592.86	767.12	SLV 3	1.29	Si
fin.	2	-2770	-848.38	767.12	SLV 3	0.9	No
ini.	2	995	641.39	767.12	SLV 2	1.2	Si
fin.	2	-2290	-846.73	767.12	SLV 2	0.91	No
ini.	2	399	592.86	767.12	SLV 4	1.29	Si
fin.	2	-2770	-848.38	767.12	SLV 4	0.9	No
ini.	2	-3071	-569.78	767.12	SLV 11	1.35	Si
fin.	2	-1301	215.27	767.12	SLV 11	3.56	Si
ini.	2	-3274	-1060.16	767.12	SLV 14	0.72	No
fin.	2	833	792.62	767.12	SLV 14	0.97	No
ini.	2	-3071	-569.78	767.12	SLV 12	1.35	Si
fin.	2	-1301	215.27	767.12	SLV 12	3.56	Si

Verifiche a taglio delle travi in muratura secondo §C8.7.1.3.1 in combinazioni sismiche

Sezione	γM	N	M	V	Vt	Vp	Vt fess. diag.	Vt,lim	Comb.	c.s.	Verifica
ini.	2	995	641.39	-1887			647	0	SLV 2	0	No
fin.	2	-2290	-846.73	-3276			1258	470	SLV 2	0.14	No
ini.	2	995	641.39	-1887			647	0	SLV 1	0	No
fin.	2	-2290	-846.73	-3276			1258	470	SLV 1	0.14	No
ini.	2	-3274	-1060.16	4058			1520	539	SLV 13	0.13	No
fin.	2	833	792.62	2573			647	22	SLV 13	0.01	No
ini.	2	-3274	-1060.16	4058			1520	539	SLV 14	0.13	No
fin.	2	833	792.62	2573			647	22	SLV 14	0.01	No
ini.	2	399	592.86	-2010			647	176	SLV 4	0.09	No
fin.	2	-2770	-848.38	-3131			1386	505	SLV 4	0.16	No
ini.	2	-3870	-1108.7	3935			1679	577	SLV 15	0.15	No
fin.	2	353	790.97	2718			647	185	SLV 15	0.07	No
ini.	2	399	592.86	-2010			647	176	SLV 3	0.09	No
fin.	2	-2770	-848.38	-3131			1386	505	SLV 3	0.16	No
ini.	2	-1084	-408	2121			936	368	SLV 9	0.17	No
fin.	2	300	220.78	358			647	195	SLV 9	0.55	No
ini.	2	-3870	-1108.7	3935			1679	577	SLV 16	0.15	No
fin.	2	353	790.97	2718			647	185	SLV 16	0.07	No
ini.	2	-1084	-408	2121			936	368	SLV 10	0.17	No
fin.	2	300	220.78	358			647	195	SLV 10	0.55	No

Tabella dei coefficienti di sicurezza minimi

Stato limite	Coeff.s.	Comb.	Verifica
PF_SLV	0.692	SLV 15	No
V_SLV	0	SLV 1	No
PF_SLU	1.321	SLU 78	Si
V_SLU	0.227	SLU 69	No

Trave di accoppiamento 164

Verifiche condotte secondo D.M. 17-01-18 (N.T.C.)

Dati geometrici

X ini.	Y ini.	Z ini.inf.	Z ini.sup.	H ini.	X fin.	Y fin.	Z fin.inf.	Z fin.sup	H fin.	Luce	Spessore	R. Trazione
-4.13	1.141	14.15	15.15	1	-4.93	1.141	14.15	15.15	1	0.8	0.28	30000

Caratteristiche del materiale

(Circolare 7 21-01-19 C8.5.I) Muratura in mattoni pieni e malta di calce LC2_Corti

fb_	fhk	fvk0	fhmedio	τ0	fv0	μ	ϕ	fvk,lim	E	G	FC
120000			172500	9000	20000	0.577	0.767	6500	320000000	128000000	1.2

Verifiche a pressoflessione delle travi in muratura in combinazioni non sismiche

Sezione	γM	N	M	Mu	Comb.	c.s.	Verifica
ini.	3	-7811	-793.7	1420.59	SLU 78	1.79	Si
fin.	3	-4990	358.58	1420.59	SLU 78	3.96	Si
ini.	3	-6286	-787.41	1420.59	SLU 71	1.8	Si
fin.	3	-3758	416.61	1420.59	SLU 71	3.41	Si
ini.	3	-6289	-750.55	1420.59	SLU 58	1.89	Si
fin.	3	-3823	385.73	1420.59	SLU 58	3.68	Si
ini.	3	-6302	-748.9	1420.59	SLU 59	1.9	Si
fin.	3	-3838	379.9	1420.59	SLU 59	3.74	Si
ini.	3	-7632	-828.11	1420.59	SLU 79	1.72	Si
fin.	3	-4773	403.96	1420.59	SLU 79	3.52	Si
ini.	3	-6465	-753.01	1420.59	SLU 70	1.89	Si
fin.	3	-3975	371.23	1420.59	SLU 70	3.83	Si
ini.	3	-6299	-785.76	1420.59	SLU 72	1.81	Si
fin.	3	-3773	410.78	1420.59	SLU 72	3.46	Si
ini.	3	-7645	-826.46	1420.59	SLU 80	1.72	Si
fin.	3	-4788	398.13	1420.59	SLU 80	3.57	Si
ini.	3	-6452	-754.65	1420.59	SLU 69	1.88	Si
fin.	3	-3961	377.07	1420.59	SLU 69	3.77	Si
ini.	3	-7798	-795.35	1420.59	SLU 77	1.79	Si
fin.	3	-4976	364.41	1420.59	SLU 77	3.9	Si

Verifiche a taglio delle travi in muratura secondo §C8.7.1.3.1 in combinazioni non sismiche

Sezione	γM	N	M	V	Vt	Vp	Vt fess. diag.	Vt,lim	Comb.	c.s.	Verifica
ini.	3	-7645	-826.46	4945			4136	1230	SLU 80	0.25	No
fin.	3	-4788	398.13	-891			2993	1005	SLU 80	1.13	Si
ini.	3	-5109	-677.1	4104			3122	1032	SLU 48	0.25	No

Sezione	γM	N	M	V	Vt	Vp	Vt fess. diag.	Vt,lim	Comb.	c.s.	Verifica
fin.	3	-3011	358.84	-1018			2283	834	SLU 48	0.82	No
ini.	3	-6465	-753.01	4603			3664	1142	SLU 70	0.25	No
fin.	3	-3975	371.23	-1072			2668	931	SLU 70	0.87	No
ini.	3	-6286	-787.41	4650			3593	1129	SLU 71	0.24	No
fin.	3	-3758	416.61	-918			2582	910	SLU 71	0.99	No
ini.	3	-4956	-708.21	4131			3061	1019	SLU 51	0.25	No
fin.	3	-2823	392.55	-888			2208	814	SLU 51	0.92	No
ini.	3	-6299	-785.76	4640			3598	1130	SLU 72	0.24	No
fin.	3	-3773	410.78	-930			2587	911	SLU 72	0.98	No
ini.	3	-7798	-795.35	4919			4197	1241	SLU 77	0.25	No
fin.	3	-4976	364.41	-1021			3069	1021	SLU 77	1	Si
ini.	3	-6452	-754.65	4613			3659	1141	SLU 69	0.25	No
fin.	3	-3961	377.07	-1060			2663	929	SLU 69	0.88	No
ini.	3	-7632	-828.11	4955			4131	1229	SLU 79	0.25	No
fin.	3	-4773	403.96	-879			2988	1003	SLU 79	1.14	Si
ini.	3	-4943	-709.85	4141			3056	1018	SLU 50	0.25	No
fin.	3	-2809	398.38	-876			2202	813	SLU 50	0.93	No

Verifiche a pressoflessione delle travi in muratura in combinazioni sismiche

Sezione	γM	N	M	Mu	Comb.	c.s.	Verifica
ini.	2	-5070	-1261.59	2130.88	SLV 13	1.69	Si
fin.	2	-2201	1026.12	2130.88	SLV 13	2.08	Si
ini.	2	-6669	-907.26	2130.88	SLV 9	2.35	Si
fin.	2	-4147	504.94	2130.88	SLV 9	4.22	Si
ini.	2	-4958	273.09	2130.88	SLV 1	7.8	Si
fin.	2	-4444	-626.57	2130.88	SLV 1	3.4	Si
ini.	2	-3666	-1104.9	2130.88	SLV 15	1.93	Si
fin.	2	-1207	977.04	2130.88	SLV 15	2.18	Si
ini.	2	-6669	-907.26	2130.88	SLV 10	2.35	Si
fin.	2	-4147	504.94	2130.88	SLV 10	4.22	Si
ini.	2	-3666	-1104.9	2130.88	SLV 16	1.93	Si
fin.	2	-1207	977.04	2130.88	SLV 16	2.18	Si
ini.	2	-4958	273.09	2130.88	SLV 2	7.8	Si
fin.	2	-4444	-626.57	2130.88	SLV 2	3.4	Si
ini.	2	-3555	429.79	2130.88	SLV 4	4.96	Si
fin.	2	-3449	-675.65	2130.88	SLV 4	3.15	Si
ini.	2	-3555	429.79	2130.88	SLV 3	4.96	Si
fin.	2	-3449	-675.65	2130.88	SLV 3	3.15	Si
ini.	2	-5070	-1261.59	2130.88	SLV 14	1.69	Si
fin.	2	-2201	1026.12	2130.88	SLV 14	2.08	Si

Verifiche a taglio delle travi in muratura secondo §C8.7.1.3.1 in combinazioni sismiche

Sezione	γM	N	M	V	Vt	Vp	Vt fess. diag.	Vt,lim	Comb.	c.s.	Verifica
ini.	2	-5070	-1261.59	5630			3645	1309	SLV 14	0.23	No
fin.	2	-2201	1026.12	1260			2498	976	SLV 14	0.77	No
ini.	2	-6669	-907.26	4741			4285	1461	SLV 10	0.31	No
fin.	2	-4147	504.94	201			3276	1212	SLV 10	6.02	Si
ini.	2	-1989	-384.95	1980			2413	947	SLV 12	0.48	No
fin.	2	-831	341.34	-63			1950	768	SLV 12	12.11	Si
ini.	2	-5070	-1261.59	5630			3645	1309	SLV 13	0.23	No
fin.	2	-2201	1026.12	1260			2498	976	SLV 13	0.77	No
ini.	2	-6635	-446.86	3150			4271	1458	SLV 6	0.46	No
fin.	2	-4819	9.13	-786			3545	1283	SLV 6	1.63	Si
ini.	2	-6669	-907.26	4741			4285	1461	SLV 9	0.31	No
fin.	2	-4147	504.94	201			3276	1212	SLV 9	6.02	Si
ini.	2	-6635	-446.86	3150			4271	1458	SLV 5	0.46	No
fin.	2	-4819	9.13	-786			3545	1283	SLV 5	1.63	Si
ini.	2	-3666	-1104.9	4801			3084	1158	SLV 16	0.24	No
fin.	2	-1207	977.04	1181			2100	831	SLV 16	0.7	No
ini.	2	-1989	-384.95	1980			2413	947	SLV 11	0.48	No
fin.	2	-831	341.34	-63			1950	768	SLV 11	12.11	Si
ini.	2	-3666	-1104.9	4801			3084	1158	SLV 15	0.24	No
fin.	2	-1207	977.04	1181			2100	831	SLV 15	0.7	No

Tabella dei coefficienti di sicurezza minimi

Stato limite	Coeff.s.	Comb.	Verifica
PF_SLV	1.689	SLV 13	Si
V_SLV	0.232	SLV 13	No
PF_SLU	1.715	SLU 79	Si
V_SLU	0.243	SLU 71	No

Trave di accoppiamento 165

Verifiche condotte secondo D.M. 17-01-18 (N.T.C.)

Dati geometrici

X ini.	Y ini.	Z ini.inf.	Z ini.sup.	H ini.	X fin.	Y fin.	Z fin.inf.	Z fin.sup	H fin.	Luce	Spessore	R. Trazione
-9.94	3.3	13.95	15.15	1.2	-10.74	3.3	13.95	15.15	1.2	0.8	0.14	30000

Caratteristiche del materiale

(Circolare 7 21-01-19 C8.5.I) Muratura in mattoni pieni e malta di calce LC2_Corti

fb_	fhk	fvk0	fhmedio	τ0	fv0	μ	ϕ	fvk,lim	E	G	FC
120000			172500	9000	20000	0.577	0.767	6500	320000000	128000000	1.2

Verifiche a pressoflessione delle travi in muratura in combinazioni non sismiche

Sezione	γM	N	M	Mu	Comb.	c.s.	Verifica

Sezione	γM	N	M	Mu	Comb.	c.s.	Verifica
ini.	3	45	53.94	1022.82	SLU 43	18.96	Si
fin.	3	45	-152.07	1022.82	SLU 43	6.73	Si
ini.	3	50	56.69	1022.82	SLU 71	18.04	Si
fin.	3	50	-164.33	1022.82	SLU 71	6.22	Si
ini.	3	52	73.81	1022.82	SLU 48	13.86	Si
fin.	3	52	-148.69	1022.82	SLU 48	6.88	Si
ini.	3	52	53.37	1022.82	SLU 47	19.17	Si
fin.	3	52	-188.47	1022.82	SLU 47	5.43	Si
ini.	3	45	54.06	1022.82	SLU 44	18.92	Si
fin.	3	45	-149.38	1022.82	SLU 44	6.85	Si
ini.	3	59	52.55	1022.82	SLU 50	19.46	Si
fin.	3	59	-230.26	1022.82	SLU 50	4.44	Si
ini.	3	46	41.19	1022.82	SLU 8	24.83	Si
fin.	3	46	-177.78	1022.82	SLU 8	5.75	Si
ini.	3	59	52.62	1022.82	SLU 51	19.44	Si
fin.	3	59	-228.64	1022.82	SLU 51	4.47	Si
ini.	3	50	56.76	1022.82	SLU 72	18.02	Si
fin.	3	50	-162.71	1022.82	SLU 72	6.29	Si
ini.	3	46	41.27	1022.82	SLU 9	24.79	Si
fin.	3	46	-176.16	1022.82	SLU 9	5.81	Si

Verifiche a taglio delle travi in muratura secondo §C8.7.1.3.1 in combinazioni non sismiche

Sezione	γM	N	M	V	Vt	Vp	Vt fess. diag.	Vt,lim	Comb.	c.s.	Verifica
ini.	3	59	52.55	-113			647	230	SLU 50	2.03	Si
fin.	3	59	-230.26	-625			647	230	SLU 50	0.37	No
ini.	3	52	53.37	-62			647	232	SLU 47	3.73	Si
fin.	3	52	-188.47	-574			647	232	SLU 47	0.4	No
ini.	3	52	73.81	50			647	232	SLU 48	4.62	Si
fin.	3	52	-148.69	-618			647	232	SLU 48	0.38	No
ini.	3	50	56.69	-21			647	232	SLU 71	10.87	Si
fin.	3	50	-164.33	-560			647	232	SLU 71	0.42	No
ini.	3	42	77.95	142			647	234	SLU 69	1.65	Si
fin.	3	42	-82.76	-552			647	234	SLU 69	0.42	No
ini.	3	50	56.76	-19			647	232	SLU 72	11.94	Si
fin.	3	50	-162.71	-558			647	232	SLU 72	0.42	No
ini.	3	52	73.89	52			647	232	SLU 49	4.45	Si
fin.	3	52	-147.08	-616			647	232	SLU 49	0.38	No
ini.	3	45	74.58	100			647	234	SLU 46	2.33	Si
fin.	3	45	-107.98	-568			647	234	SLU 46	0.41	No
ini.	3	59	52.62	-112			647	230	SLU 51	2.06	Si
fin.	3	59	-228.64	-623			647	230	SLU 51	0.37	No
ini.	3	45	74.51	98			647	234	SLU 45	2.38	Si
fin.	3	45	-109.6	-570			647	234	SLU 45	0.41	No

Verifiche a pressoflessione delle travi in muratura in combinazioni sismiche

Sezione	γM	N	M	Mu	Comb.	c.s.	Verifica
ini.	2	-153	-135.87	1534.24	SLV 3	11.29	Si
fin.	2	-307	-1044.42	1534.24	SLV 3	1.47	Si
ini.	2	-153	-135.87	1534.24	SLV 4	11.29	Si
fin.	2	-307	-1044.42	1534.24	SLV 4	1.47	Si
ini.	2	274	244.99	1534.24	SLV 15	6.26	Si
fin.	2	411	858.18	1534.24	SLV 15	1.79	Si
ini.	2	-225	-155.72	1534.24	SLV 1	9.85	Si
fin.	2	-362	-953.81	1534.24	SLV 1	1.61	Si
ini.	2	202	225.14	1534.24	SLV 13	6.81	Si
fin.	2	355	948.78	1534.24	SLV 13	1.62	Si
ini.	2	80	20.6	1534.24	SLV 7	74.48	Si
fin.	2	9	-484.22	1534.24	SLV 7	3.17	Si
ini.	2	80	20.6	1534.24	SLV 8	74.48	Si
fin.	2	9	-484.22	1534.24	SLV 8	3.17	Si
ini.	2	-225	-155.72	1534.24	SLV 2	9.85	Si
fin.	2	-362	-953.81	1534.24	SLV 2	1.61	Si
ini.	2	274	244.99	1534.24	SLV 16	6.26	Si
fin.	2	411	858.18	1534.24	SLV 16	1.79	Si
ini.	2	202	225.14	1534.24	SLV 14	6.81	Si
fin.	2	355	948.78	1534.24	SLV 14	1.62	Si

Verifiche a taglio delle travi in muratura secondo §C8.7.1.3.1 in combinazioni sismiche

Sezione	γM	N	M	V	Vt	Vp	Vt fess. diag.	Vt,lim	Comb.	c.s.	Verifica
ini.	2	80	20.6	-469			970	347	SLV 8	0.74	No
fin.	2	9	-484.22	-857			970	363	SLV 8	0.42	No
ini.	2	-225	-155.72	-951			1061	411	SLV 1	0.43	No
fin.	2	-362	-953.81	-1292			1115	437	SLV 1	0.34	No
ini.	2	-153	-135.87	-1082			1032	397	SLV 4	0.37	No
fin.	2	-307	-1044.42	-1423			1093	427	SLV 4	0.3	No
ini.	2	202	225.14	1236			970	318	SLV 13	0.26	No
fin.	2	355	948.78	761			970	277	SLV 13	0.36	No
ini.	2	80	20.6	-469			970	347	SLV 7	0.74	No
fin.	2	9	-484.22	-857			970	363	SLV 7	0.42	No
ini.	2	-225	-155.72	-951			1061	411	SLV 2	0.43	No
fin.	2	-362	-953.81	-1292			1115	437	SLV 2	0.34	No
ini.	2	274	244.99	1106			970	300	SLV 16	0.27	No
fin.	2	411	858.18	630			970	261	SLV 16	0.41	No
ini.	2	202	225.14	1236			970	318	SLV 14	0.26	No
fin.	2	355	948.78	761			970	277	SLV 14	0.36	No
ini.	2	-153	-135.87	-1082			1032	397	SLV 3	0.37	No
fin.	2	-307	-1044.42	-1423			1093	427	SLV 3	0.3	No
ini.	2	274	244.99	1106			970	300	SLV 15	0.27	No
fin.	2	411	858.18	630			970	261	SLV 15	0.41	No

Tabella dei coefficienti di sicurezza minimi

Stato limite	Coeff.s.	Comb.	Verifica
PF_SLV	1.469	SLV 3	Si
V_SLV	0.257	SLV 13	No
PF_SLU	4.442	SLU 50	Si
V_SLU	0.368	SLU 50	No

Trave di accoppiamento 166

Verifiche condotte secondo D.M. 17-01-18 (N.T.C.)

Dati geometrici

X ini.	Y ini.	Z ini.inf.	Z ini.sup.	H ini.	X fin.	Y fin.	Z fin.inf.	Z fin.sup	H fin.	Luce	Spessore	R. Trazione
-11.003	0	14.15	15.15	1	-11.003	1	14.15	15.15	1	1	0.28	30000

Caratteristiche del materiale

(Circolare 7 21-01-19 C8.5.I) Muratura in mattoni pieni e malta di calce LC2_Corti

fb_	fhk	fvk0	fhmedio	τ0	fv0	μ	ϕ	fvk,lim	E	G	FC
120000			172500	9000	20000	0.577	0.767	6500	320000000	128000000	1.2

Verifiche a pressoflessione delle travi in muratura in combinazioni non sismiche

Sezione	γM	N	M	Mu	Comb.	c.s.	Verifica
ini.	3	-116	-1777.04	1420.59	SLU 77	0.8	No
fin.	3	-116	-86.38	1420.59	SLU 77	16.45	Si
ini.	3	-117	-1675.15	1420.59	SLU 78	0.85	No
fin.	3	-117	-73.42	1420.59	SLU 78	19.35	Si
ini.	3	-103	-1615.8	1420.59	SLU 70	0.88	No
fin.	3	-103	-73.85	1420.59	SLU 70	19.24	Si
ini.	3	-102	-1717.69	1420.59	SLU 69	0.83	No
fin.	3	-102	-86.81	1420.59	SLU 69	16.36	Si
ini.	3	-108	-1589.51	1420.59	SLU 74	0.89	No
fin.	3	-108	-70.69	1420.59	SLU 74	20.1	Si
ini.	3	-103	-1579.16	1420.59	SLU 35	0.9	No
fin.	3	-103	-81.75	1420.59	SLU 35	17.38	Si
ini.	3	-102	-1579.08	1420.59	SLU 72	0.9	No
fin.	3	-102	-69.7	1420.59	SLU 72	20.38	Si
ini.	3	-101	-1680.97	1420.59	SLU 71	0.85	No
fin.	3	-101	-82.65	1420.59	SLU 71	17.19	Si
ini.	3	-114	-1740.32	1420.59	SLU 79	0.82	No
fin.	3	-114	-82.22	1420.59	SLU 79	17.28	Si
ini.	3	-116	-1638.43	1420.59	SLU 80	0.87	No
fin.	3	-116	-69.27	1420.59	SLU 80	20.51	Si

Verifiche a taglio delle travi in muratura secondo §C8.7.1.3.1 in combinazioni non sismiche

Sezione	γM	N	M	V	Vt	Vp	Vt fess. diag.	Vt,lim	Comb.	c.s.	Verifica
ini.	3	-116	-1777.04	1989			1125	430	SLU 77	0.22	No
fin.	3	-116	-86.38	1356			1125	430	SLU 77	0.32	No
ini.	3	-108	-1589.51	1817			1122	429	SLU 74	0.24	No
fin.	3	-108	-70.69	1184			1122	429	SLU 74	0.36	No
ini.	3	-102	-1579.08	1807			1119	427	SLU 72	0.24	No
fin.	3	-102	-69.7	1175			1119	427	SLU 72	0.36	No
ini.	3	-103	-1615.8	1840			1120	428	SLU 70	0.23	No
fin.	3	-103	-73.85	1208			1120	428	SLU 70	0.35	No
ini.	3	-117	-1675.15	1900			1125	430	SLU 78	0.23	No
fin.	3	-117	-73.42	1267			1125	430	SLU 78	0.34	No
ini.	3	-113	-1578.22	1810			1124	430	SLU 83	0.24	No
fin.	3	-113	-66.35	1177			1124	430	SLU 83	0.36	No
ini.	3	-102	-1717.69	1929			1119	427	SLU 69	0.22	No
fin.	3	-102	-86.81	1296			1119	427	SLU 69	0.33	No
ini.	3	-116	-1638.43	1867			1125	430	SLU 80	0.23	No
fin.	3	-116	-69.27	1235			1125	430	SLU 80	0.35	No
ini.	3	-101	-1680.97	1896			1119	427	SLU 71	0.23	No
fin.	3	-101	-82.65	1264			1119	427	SLU 71	0.34	No
ini.	3	-114	-1740.32	1956			1124	430	SLU 79	0.22	No
fin.	3	-114	-82.22	1324			1124	430	SLU 79	0.32	No

Verifiche a pressoflessione delle travi in muratura in combinazioni sismiche

Sezione	γM	N	M	Mu	Comb.	c.s.	Verifica
ini.	2	1274	1771.14	2130.88	SLV 7	1.2	Si
fin.	2	2192	-167.73	2130.88	SLV 7	12.7	Si
ini.	2	-466	-2492.47	2130.88	SLV 13	0.85	No
fin.	2	-825	-240.09	2130.88	SLV 13	8.88	Si
ini.	2	1274	1771.14	2130.88	SLV 8	1.2	Si
fin.	2	2192	-167.73	2130.88	SLV 8	12.7	Si
ini.	2	-466	-2492.47	2130.88	SLV 14	0.85	No
fin.	2	-825	-240.09	2130.88	SLV 14	8.88	Si
ini.	2	-1410	-3265.25	2130.88	SLV 6	0.65	No
fin.	2	-2273	256	2130.88	SLV 6	8.32	Si
ini.	2	-1408	-3722.15	2130.88	SLV 10	0.57	No
fin.	2	-2326	95.48	2130.88	SLV 10	22.32	Si
ini.	2	1276	1314.24	2130.88	SLV 11	1.62	Si
fin.	2	2139	-328.24	2130.88	SLV 11	6.49	Si
ini.	2	1276	1314.24	2130.88	SLV 12	1.62	Si
fin.	2	2139	-328.24	2130.88	SLV 12	6.49	Si
ini.	2	-1410	-3265.25	2130.88	SLV 5	0.65	No
fin.	2	-2273	256	2130.88	SLV 5	8.32	Si
ini.	2	-1408	-3722.15	2130.88	SLV 9	0.57	No

Sezione	γM	N	M	Mu	Comb.	c.s.	Verifica
fin.	2	-2326	95.48	2130.88	SLV 9	22.32	Si

Verifiche a taglio delle travi in muratura secondo §C8.7.1.3.1 in combinazioni sismiche

Sezione	γM	N	M	V	Vt	Vp	Vt fess. diag.	Vt,lim	Comb.	c.s.	Verifica
ini.	2	-1408	-3722.15	3753			2181	862	SLV 9	0.23	No
fin.	2	-2326	95.48	3775			2548	993	SLV 9	0.26	No
ini.	2	1276	1314.24	-1033			1617	181	SLV 12	0.18	No
fin.	2	2139	-328.24	-1991			1617	0	SLV 12	0	No
ini.	2	-1410	-3265.25	3366			2181	862	SLV 5	0.26	No
fin.	2	-2273	256	3358			2527	986	SLV 5	0.29	No
ini.	2	1274	1771.14	-1419			1617	182	SLV 7	0.13	No
fin.	2	2192	-167.73	-2408			1617	0	SLV 7	0	No
ini.	2	1276	1314.24	-1033			1617	181	SLV 11	0.18	No
fin.	2	2139	-328.24	-1991			1617	0	SLV 11	0	No
ini.	2	1274	1771.14	-1419			1617	182	SLV 8	0.13	No
fin.	2	2192	-167.73	-2408			1617	0	SLV 8	0	No
ini.	2	-1410	-3265.25	3366			2181	862	SLV 6	0.26	No
fin.	2	-2273	256	3358			2527	986	SLV 6	0.29	No
ini.	2	-1408	-3722.15	3753			2181	862	SLV 10	0.23	No
fin.	2	-2326	95.48	3775			2548	993	SLV 10	0.26	No
ini.	2	-466	-2492.47	2529			1804	703	SLV 13	0.28	No
fin.	2	-825	-240.09	2243			1947	767	SLV 13	0.34	No
ini.	2	-466	-2492.47	2529			1804	703	SLV 14	0.28	No
fin.	2	-825	-240.09	2243			1947	767	SLV 14	0.34	No

Tabella dei coefficienti di sicurezza minimi

Stato limite	Coeff.s.	Comb.	Verifica
PF_SLV	0.572	SLV 9	No
V_SLV	0	SLV 7	No
PF_SLU	0.799	SLU 77	No
V_SLU	0.216	SLU 77	No

Trave di accoppiamento 167

Verifiche condotte secondo D.M. 17-01-18 (N.T.C.)

Dati geometrici

X ini.	Y ini.	Z ini.inf.	Z ini.sup.	H ini.	X fin.	Y fin.	Z fin.inf.	Z fin.sup	H fin.	Luce	Spessore	R. Trazione
-9.72	1.426	14.15	15.15	1	-9.72	2.226	14.15	15.15	1	0.8	0.14	30000

Caratteristiche del materiale

(Circolare 7 21-01-19 C8.5.I) Muratura in mattoni pieni e malta di calce LC2_Corti

fb_	fhk	fvk0	fhmedio	τ0	fv0	μ	ϕ	fvk,lim	E	G	FC
120000			172500	9000	20000	0.577	0.767	6500	320000000	128000000	1.2

Verifiche a pressoflessione delle travi in muratura in combinazioni non sismiche

Sezione	γM	N	M	Mu	Comb.	c.s.	Verifica
ini.	3	191	9.51	710.29	SLU 71	74.71	Si
fin.	3	191	-997.8	710.29	SLU 71	0.71	No
ini.	3	187	11.72	710.29	SLU 56	60.6	Si
fin.	3	187	-984.34	710.29	SLU 56	0.72	No
ini.	3	198	23.59	710.29	SLU 80	30.11	Si
fin.	3	198	-1052.59	710.29	SLU 80	0.67	No
ini.	3	189	6.81	710.29	SLU 70	104.23	Si
fin.	3	189	-1003.06	710.29	SLU 70	0.71	No
ini.	3	196	20.3	710.29	SLU 78	34.99	Si
fin.	3	196	-1060.75	710.29	SLU 78	0.67	No
ini.	3	196	19.7	710.29	SLU 77	36.06	Si
fin.	3	196	-1063.66	710.29	SLU 77	0.67	No
ini.	3	189	6.22	710.29	SLU 69	114.27	Si
fin.	3	189	-1005.97	710.29	SLU 69	0.71	No
ini.	3	179	36.42	710.29	SLU 83	19.5	Si
fin.	3	179	-984.65	710.29	SLU 83	0.72	No
ini.	3	198	22.99	710.29	SLU 79	30.89	Si
fin.	3	198	-1055.49	710.29	SLU 79	0.67	No
ini.	3	191	10.11	710.29	SLU 72	70.28	Si
fin.	3	191	-994.89	710.29	SLU 72	0.71	No

Verifiche a taglio delle travi in muratura secondo §C8.7.1.3.1 in combinazioni non sismiche

Sezione	γM	N	M	V	Vt	Vp	Vt fess. diag.	Vt,lim	Comb.	c.s.	Verifica
ini.	3	198	22.99	-1217			539	154	SLU 79	0.13	No
fin.	3	198	-1055.49	-1484			539	154	SLU 79	0.1	No
ini.	3	191	10.11	-1125			539	156	SLU 72	0.14	No
fin.	3	191	-994.89	-1392			539	156	SLU 72	0.11	No
ini.	3	189	6.81	-1131			539	156	SLU 70	0.14	No
fin.	3	189	-1003.06	-1398			539	156	SLU 70	0.11	No
ini.	3	198	23.59	-1214			539	154	SLU 80	0.13	No
fin.	3	198	-1052.59	-1481			539	154	SLU 80	0.1	No
ini.	3	191	9.51	-1128			539	156	SLU 71	0.14	No
fin.	3	191	-997.8	-1395			539	156	SLU 71	0.11	No
ini.	3	189	6.22	-1134			539	156	SLU 69	0.14	No
fin.	3	189	-1005.97	-1401			539	156	SLU 69	0.11	No
ini.	3	196	20.3	-1220			539	154	SLU 78	0.13	No
fin.	3	196	-1060.75	-1487			539	154	SLU 78	0.1	No
ini.	3	179	36.42	-1145			539	159	SLU 83	0.14	No
fin.	3	179	-984.65	-1412			539	159	SLU 83	0.11	No

Sezione	γM	N	M	V	Vt	Vp	Vt fess. diag.	Vt,lim	Comb.	c.s.	Verifica
ini.	3	179	37.02	-1143			539	159	SLU 84	0.14	No
fin.	3	179	-981.74	-1409			539	159	SLU 84	0.11	No
ini.	3	196	19.7	-1223			539	155	SLU 77	0.13	No
fin.	3	196	-1063.66	-1490			539	155	SLU 77	0.1	No

Verifiche a pressoflessione delle travi in muratura in combinazioni sismiche

Sezione	γM	N	M	Mu	Comb.	c.s.	Verifica
ini.	2	-1601	94.43	1065.44	SLV 8	11.28	Si
fin.	2	-678	-2083.83	1065.44	SLV 8	0.51	No
ini.	2	-1802	72.6	1065.44	SLV 11	14.68	Si
fin.	2	-797	-1814.67	1065.44	SLV 11	0.59	No
ini.	2	-94	76.26	1065.44	SLV 3	13.97	Si
fin.	2	57	-1467.07	1065.44	SLV 3	0.73	No
ini.	2	1828	-52.05	1065.44	SLV 9	20.47	Si
fin.	2	905	844.72	1065.44	SLV 9	1.26	Si
ini.	2	-1802	72.6	1065.44	SLV 12	14.68	Si
fin.	2	-797	-1814.67	1065.44	SLV 12	0.59	No
ini.	2	995	38.87	1065.44	SLV 1	27.41	Si
fin.	2	567	-669.25	1065.44	SLV 1	1.59	Si
ini.	2	995	38.87	1065.44	SLV 2	27.41	Si
fin.	2	567	-669.25	1065.44	SLV 2	1.59	Si
ini.	2	-1601	94.43	1065.44	SLV 7	11.28	Si
fin.	2	-678	-2083.83	1065.44	SLV 7	0.51	No
ini.	2	-94	76.26	1065.44	SLV 4	13.97	Si
fin.	2	57	-1467.07	1065.44	SLV 4	0.73	No
ini.	2	1828	-52.05	1065.44	SLV 10	20.47	Si
fin.	2	905	844.72	1065.44	SLV 10	1.26	Si

Verifiche a taglio delle travi in muratura secondo §C8.7.1.3.1 in combinazioni sismiche

Sezione	γM	N	M	V	Vt	Vp	Vt fess. diag.	Vt,lim	Comb.	c.s.	Verifica
ini.	2	-94	76.26	-1960			847	324	SLV 4	0.17	No
fin.	2	57	-1467.07	-1999			809	292	SLV 4	0.15	No
ini.	2	-1601	94.43	-2825			1449	552	SLV 8	0.2	No
fin.	2	-678	-2083.83	-2646			1080	427	SLV 8	0.16	No
ini.	2	2030	-30.22	1012			809	0	SLV 5	0	No
fin.	2	1024	575.56	459			809	0	SLV 5	0	No
ini.	2	-94	76.26	-1960			847	324	SLV 3	0.17	No
fin.	2	57	-1467.07	-1999			809	292	SLV 3	0.15	No
ini.	2	-1601	94.43	-2825			1449	552	SLV 7	0.2	No
fin.	2	-678	-2083.83	-2646			1080	427	SLV 7	0.16	No
ini.	2	2030	-30.22	1012			809	0	SLV 6	0	No
fin.	2	1024	575.56	459			809	0	SLV 6	0	No
ini.	2	995	38.87	-809			809	0	SLV 1	0	No
fin.	2	567	-669.25	-1068			809	133	SLV 1	0.12	No
ini.	2	1828	-52.05	1422			809	0	SLV 9	0	No
fin.	2	905	844.72	836			809	0	SLV 9	0	No
ini.	2	1828	-52.05	1422			809	0	SLV 10	0	No
fin.	2	905	844.72	836			809	0	SLV 10	0	No
ini.	2	995	38.87	-809			809	0	SLV 2	0	No
fin.	2	567	-669.25	-1068			809	133	SLV 2	0.12	No

Tabella dei coefficienti di sicurezza minimi

Stato limite	Coeff.s.	Comb.	Verifica
PF_SLV	0.511	SLV 7	No
V_SLV	0	SLV 1	No
PF_SLU	0.668	SLU 77	No
V_SLU	0.104	SLU 77	No

Trave di accoppiamento 168

Verifiche condotte secondo D.M. 17-01-18 (N.T.C.)

Dati geometrici

X ini.	Y ini.	Z ini.inf.	Z ini.sup.	H ini.	X fin.	Y fin.	Z fin.inf.	Z fin.sup	H fin.	Luce	Spessore	R. Trazione
-8.548	-3.169	14.15	15.15	1	-9.448	-3.169	14.15	15.15	1	0.9	0.28	30000

Caratteristiche del materiale

(Circolare 7 21-01-19 C8.5.I) Muratura in mattoni pieni e malta di calce LC2_Corti

fb_	fhk	fvk0	fhmedio	τ0	fv0	μ	ϕ	fvk,lim	E	G	FC
120000			172500	9000	20000	0.577	0.767	6500	320000000	128000000	1.2

Verifiche a pressoflessione delle travi in muratura in combinazioni non sismiche

Sezione	γM	N	M	Mu	Comb.	c.s.	Verifica
ini.	3	1697	406.55	1420.59	SLU 83	3.49	Si
fin.	3	-59	-558.57	1420.59	SLU 83	2.54	Si
ini.	3	1864	394.66	1420.59	SLU 73	3.6	Si
fin.	3	6	-504.53	1420.59	SLU 73	2.82	Si
ini.	3	1631	399.98	1420.59	SLU 74	3.55	Si
fin.	3	-83	-553.6	1420.59	SLU 74	2.57	Si
ini.	3	1852	361.89	1420.59	SLU 78	3.93	Si
fin.	3	120	-516.92	1420.59	SLU 78	2.75	Si
ini.	3	1807	423.31	1420.59	SLU 82	3.36	Si
fin.	3	-97	-546.11	1420.59	SLU 82	2.6	Si
ini.	3	1641	433.98	1420.59	SLU 81	3.27	Si
fin.	3	-180	-570.68	1420.59	SLU 81	2.49	Si
ini.	3	1862	395.89	1420.59	SLU 84	3.59	Si

Sezione	γM	N	M	Mu	Comb.	c.s.	Verifica
fin.	3	24	-534	1420.59	SLU 84	2.66	Si
ini.	3	1698	357.59	1420.59	SLU 79	3.97	Si
fin.	3	111	-521.26	1420.59	SLU 79	2.73	Si
ini.	3	1796	389.31	1420.59	SLU 75	3.65	Si
fin.	3	-1	-529.03	1420.59	SLU 75	2.69	Si
ini.	3	1686	372.55	1420.59	SLU 77	3.81	Si
fin.	3	38	-541.49	1420.59	SLU 77	2.62	Si

Verifiche a taglio delle travi in muratura secondo §C8.7.1.3.1 in combinazioni non sismiche

Sezione	γM	N	M	V	Vt	Vp	Vt fess. diag.	Vt,lim	Comb.	c.s.	Verifica
ini.	3	1621	369.43	-1330			1078	0	SLU 61	0	No
fin.	3	-40	-470.24	-2299			1094	414	SLU 61	0.18	No
ini.	3	1456	380.1	-1335			1078	0	SLU 60	0	No
fin.	3	-123	-494.82	-2293			1127	432	SLU 60	0.19	No
ini.	3	1611	335.43	-1109			1078	0	SLU 54	0	No
fin.	3	57	-453.16	-2282			1078	393	SLU 54	0.17	No
ini.	3	1500	318.68	-1035			1078	0	SLU 56	0	No
fin.	3	95	-465.63	-2196			1078	385	SLU 56	0.18	No
ini.	3	1666	308.01	-1031			1078	0	SLU 57	0	No
fin.	3	178	-441.05	-2202			1078	365	SLU 57	0.17	No
ini.	3	1512	303.72	-1070			1078	0	SLU 58	0	No
fin.	3	168	-445.4	-2026			1078	367	SLU 58	0.18	No
ini.	3	1031	251.36	-820			1078	0	SLU 1	0	No
fin.	3	15	-336.03	-1568			1078	403	SLU 1	0.26	No
ini.	3	1733	313.36	-1142			1078	0	SLU 55	0	No
fin.	3	184	-416.55	-2116			1078	363	SLU 55	0.17	No
ini.	3	1678	293.05	-1066			1078	0	SLU 59	0	No
fin.	3	251	-420.82	-2032			1078	347	SLU 59	0.17	No
ini.	3	1445	346.1	-1114			1078	0	SLU 53	0	No
fin.	3	-26	-477.74	-2276			1089	411	SLU 53	0.18	No

Verifiche a pressoflessione delle travi in muratura in combinazioni sismiche

Sezione	γM	N	M	Mu	Comb.	c.s.	Verifica
ini.	2	-2165	-302.49	2130.88	SLV 12	7.04	Si
fin.	2	28	648.87	2130.88	SLV 12	3.28	Si
ini.	2	3650	418.5	2130.88	SLV 10	5.09	Si
fin.	2	175	-1149.53	2130.88	SLV 10	1.85	Si
ini.	2	3249	1132.95	2130.88	SLV 2	1.88	Si
fin.	2	-463	-1058.19	2130.88	SLV 2	2.01	Si
ini.	2	1504	916.66	2130.88	SLV 3	2.32	Si
fin.	2	-507	-518.67	2130.88	SLV 3	4.11	Si
ini.	2	3249	1132.95	2130.88	SLV 1	1.88	Si
fin.	2	-463	-1058.19	2130.88	SLV 1	2.01	Si
ini.	2	4404	864.72	2130.88	SLV 5	2.46	Si
fin.	2	-96	-1397.88	2130.88	SLV 5	1.52	Si
ini.	2	3650	418.5	2130.88	SLV 9	5.09	Si
fin.	2	175	-1149.53	2130.88	SLV 9	1.85	Si
ini.	2	-2165	-302.49	2130.88	SLV 11	7.04	Si
fin.	2	28	648.87	2130.88	SLV 11	3.28	Si
ini.	2	4404	864.72	2130.88	SLV 6	2.46	Si
fin.	2	-96	-1397.88	2130.88	SLV 6	1.52	Si
ini.	2	1504	916.66	2130.88	SLV 4	2.32	Si
fin.	2	-507	-518.67	2130.88	SLV 4	4.11	Si

Verifiche a taglio delle travi in muratura secondo §C8.7.1.3.1 in combinazioni sismiche

Sezione	γM	N	M	V	Vt	Vp	Vt fess. diag.	Vt,lim	Comb.	c.s.	Verifica
ini.	2	3249	1132.95	-3610			1617	0	SLV 2	0	No
fin.	2	-463	-1058.19	-4396			1803	702	SLV 2	0.16	No
ini.	2	1504	916.66	-2644			1617	0	SLV 4	0	No
fin.	2	-507	-518.67	-3264			1820	710	SLV 4	0.22	No
ini.	2	3650	418.5	-1926			1617	0	SLV 9	0	No
fin.	2	175	-1149.53	-2978			1617	569	SLV 9	0.19	No
ini.	2	3249	1132.95	-3610			1617	0	SLV 1	0	No
fin.	2	-463	-1058.19	-4396			1803	702	SLV 1	0.16	No
ini.	2	4404	864.72	-3223			1617	0	SLV 5	0	No
fin.	2	-96	-1397.88	-4243			1656	629	SLV 5	0.15	No
ini.	2	4404	864.72	-3223			1617	0	SLV 6	0	No
fin.	2	-96	-1397.88	-4243			1656	629	SLV 6	0.15	No
ini.	2	-1009	-570.72	1681			2021	798	SLV 15	0.48	No
fin.	2	395	309.18	949			1617	516	SLV 15	0.54	No
ini.	2	1504	916.66	-2644			1617	0	SLV 3	0	No
fin.	2	-507	-518.67	-3264			1820	710	SLV 3	0.22	No
ini.	2	3650	418.5	-1926			1617	0	SLV 10	0	No
fin.	2	175	-1149.53	-2978			1617	569	SLV 10	0.19	No
ini.	2	-1009	-570.72	1681			2021	798	SLV 16	0.48	No
fin.	2	395	309.18	949			1617	516	SLV 16	0.54	No

Tabella dei coefficienti di sicurezza minimi

Stato limite	Coeff.s.	Comb.	Verifica
PF_SLV	1.524	SLV 5	Si
V_SLV	0	SLV 1	No
PF_SLU	2.489	SLU 81	Si
V_SLU	0	SLU 1	No

Trave di accoppiamento 169

Verifiche condotte secondo D.M. 17-01-18 (N.T.C.)

Dati geometrici

X ini.	Y ini.	Z ini.inf.	Z ini.sup.	H ini.	X fin.	Y fin.	Z fin.inf.	Z fin.sup	H fin.	Luce	Spessore	R. Trazione
-5.088	5.94	12.05	14.05	2	-5.088	6.44	12.05	14.05	2	0.5	0.28	30000

Caratteristiche del materiale

(Circolare 7 21-01-19 C8.5.I) Muratura in mattoni pieni e malta di calce LC2_Corti

fb_	fhk	fvk0	fhmedio	τ0	fv0	μ	ϕ	fvk,lim	E	G	FC
120000			172500	9000	20000	0.577	0.767	6500	320000000	128000000	1.2

Verifiche a pressoflessione delle travi in muratura in combinazioni non sismiche

Sezione	γM	N	M	Mu	Comb.	c.s.	Verifica
ini.	3	328	29.71	5682.35	SLU 69	191.23	Si
fin.	3	71	-73.24	5682.35	SLU 69	77.58	Si
ini.	3	399	-90.58	5682.35	SLU 40	62.73	Si
fin.	3	102	-31.39	5682.35	SLU 40	181.04	Si
ini.	3	400	-89.56	5682.35	SLU 39	63.45	Si
fin.	3	103	-31.38	5682.35	SLU 39	181.1	Si
ini.	3	327	28.69	5682.35	SLU 70	198.05	Si
fin.	3	70	-73.25	5682.35	SLU 70	77.57	Si
ini.	3	228	86.5	5682.35	SLU 50	65.7	Si
fin.	3	42	-66.98	5682.35	SLU 50	84.84	Si
ini.	3	227	85.47	5682.35	SLU 51	66.48	Si
fin.	3	42	-66.99	5682.35	SLU 51	84.83	Si
ini.	3	243	60.99	5682.35	SLU 49	93.17	Si
fin.	3	44	-71.82	5682.35	SLU 49	79.12	Si
ini.	3	421	-73.97	5682.35	SLU 82	76.82	Si
fin.	3	102	-41.51	5682.35	SLU 82	136.9	Si
ini.	3	422	-72.95	5682.35	SLU 81	77.89	Si
fin.	3	103	-41.5	5682.35	SLU 81	136.93	Si
ini.	3	245	62.01	5682.35	SLU 48	91.63	Si
fin.	3	44	-71.81	5682.35	SLU 48	79.13	Si

Verifiche a taglio delle travi in muratura secondo §C8.7.1.3.1 in combinazioni non sismiche

Sezione	γM	N	M	V	Vt	Vp	Vt fess. diag.	Vt,lim	Comb.	c.s.	Verifica
ini.	3	418	-63.84	97			2157	715	SLU 41	7.4	Si
fin.	3	109	-42.12	858			2157	787	SLU 41	0.92	No
ini.	3	440	-47.23	0			2157	709	SLU 83	3113.04	Si
fin.	3	109	-52.24	855			2157	788	SLU 83	0.92	No
ini.	3	417	-64.87	100			2157	715	SLU 42	7.17	Si
fin.	3	109	-42.13	856			2157	788	SLU 42	0.92	No
ini.	3	389	-66.64	58			2157	722	SLU 33	12.55	Si
fin.	3	97	-48.59	819			2157	790	SLU 33	0.96	No
ini.	3	439	-48.26	3			2157	710	SLU 84	238.31	Si
fin.	3	109	-52.25	853			2157	788	SLU 84	0.92	No
ini.	3	400	-89.56	207			2157	719	SLU 39	3.47	Si
fin.	3	103	-31.38	867			2157	789	SLU 39	0.91	No
ini.	3	391	-65.61	54			2157	722	SLU 32	13.29	Si
fin.	3	98	-48.58	821			2157	790	SLU 32	0.96	No
ini.	3	422	-72.95	110			2157	714	SLU 81	6.47	Si
fin.	3	103	-41.5	864			2157	789	SLU 81	0.91	No
ini.	3	399	-90.58	210			2157	720	SLU 40	3.42	Si
fin.	3	102	-31.39	865			2157	789	SLU 40	0.91	No
ini.	3	421	-73.97	114			2157	714	SLU 82	6.29	Si
fin.	3	102	-41.51	862			2157	789	SLU 82	0.92	No

Verifiche a pressoflessione delle travi in muratura in combinazioni sismiche

Sezione	γM	N	M	Mu	Comb.	c.s.	Verifica
ini.	2	1650	-879.93	8523.53	SLV 11	9.69	Si
fin.	2	614	-103.56	8523.53	SLV 11	82.3	Si
ini.	2	-1204	868.1	8523.53	SLV 6	9.82	Si
fin.	2	-521	34.16	8523.53	SLV 6	249.49	Si
ini.	2	1307	-869.46	8523.53	SLV 14	9.8	Si
fin.	2	458	-216.64	8523.53	SLV 14	39.34	Si
ini.	2	-1468	1196.14	8523.53	SLV 1	7.13	Si
fin.	2	-610	155.1	8523.53	SLV 1	54.95	Si
ini.	2	1650	-879.93	8523.53	SLV 12	9.69	Si
fin.	2	614	-103.56	8523.53	SLV 12	82.3	Si
ini.	2	-1468	1196.14	8523.53	SLV 2	7.13	Si
fin.	2	-610	155.1	8523.53	SLV 2	54.95	Si
ini.	2	1913	-1207.97	8523.53	SLV 16	7.06	Si
fin.	2	703	-224.5	8523.53	SLV 16	37.97	Si
ini.	2	-1204	868.1	8523.53	SLV 5	9.82	Si
fin.	2	-521	34.16	8523.53	SLV 5	249.49	Si
ini.	2	1307	-869.46	8523.53	SLV 13	9.8	Si
fin.	2	458	-216.64	8523.53	SLV 13	39.34	Si
ini.	2	1913	-1207.97	8523.53	SLV 15	7.06	Si
fin.	2	703	-224.5	8523.53	SLV 15	37.97	Si

Verifiche a taglio delle travi in muratura secondo §C8.7.1.3.1 in combinazioni sismiche

Sezione	γM	N	M	V	Vt	Vp	Vt fess. diag.	Vt,lim	Comb.	c.s.	Verifica
ini.	2	1650	-879.93	3020			3235	780	SLV 11	0.26	No
fin.	2	614	-103.56	4034			3235	1076	SLV 11	0.27	No
ini.	2	1913	-1207.97	4081			3235	685	SLV 15	0.17	No
fin.	2	703	-224.5	5129			3235	1054	SLV 15	0.21	No
ini.	2	1307	-869.46	2849			3235	889	SLV 13	0.31	No
fin.	2	458	-216.64	3660			3235	1113	SLV 13	0.3	No
ini.	2	1913	-1207.97	4081			3235	685	SLV 16	0.17	No
fin.	2	703	-224.5	5129			3235	1054	SLV 16	0.21	No
ini.	2	-1204	868.1	-3229			3717	1456	SLV 6	0.45	No

Sezione	γM	N	M	V	Vt	Vp	Vt fess. diag.	Vt,lim	Comb.	c.s.	Verifica
fin.	2	-521	34.16	-3268			3444	1326	SLV 6	0.41	No
ini.	2	-1204	868.1	-3229			3717	1456	SLV 5	0.45	No
fin.	2	-521	34.16	-3268			3444	1326	SLV 5	0.41	No
ini.	2	1307	-869.46	2849			3235	889	SLV 14	0.31	No
fin.	2	458	-216.64	3660			3235	1113	SLV 14	0.3	No
ini.	2	-1468	1196.14	-4290			3822	1503	SLV 1	0.35	No
fin.	2	-610	155.1	-4362			3479	1344	SLV 1	0.31	No
ini.	2	-1468	1196.14	-4290			3822	1503	SLV 2	0.35	No
fin.	2	-610	155.1	-4362			3479	1344	SLV 2	0.31	No
ini.	2	1650	-879.93	3020			3235	780	SLV 12	0.26	No
fin.	2	614	-103.56	4034			3235	1076	SLV 12	0.27	No

Tabella dei coefficienti di sicurezza minimi

Stato limite	Coeff.s.	Comb.	Verifica
PF_SLV	7.056	SLV 15	Si
V_SLV	0.168	SLV 15	No
PF_SLU	62.732	SLU 40	Si
V_SLU	0.91	SLU 39	No

Trave di accoppiamento 170

Verifiche condotte secondo D.M. 17-01-18 (N.T.C.)

Dati geometrici

X ini.	Y ini.	Z ini.inf.	Z ini.sup.	H ini.	X fin.	Y fin.	Z fin.inf.	Z fin.sup	H fin.	Luce	Spessore	R. Trazione
-5.088	5.94	14.85	15.15	0.3	-5.088	6.44	14.85	15.15	0.3	0.5	0.28	30000

Caratteristiche del materiale

(Circolare 7 21-01-19 C8.5.I) Muratura in mattoni pieni e malta di calce LC2_Corti

fb_	fhk	fvk0	fhmedio	τ0	fv0	μ	ϕ	fvk,lim	E	G	FC
120000			172500	9000	20000	0.577	0.767	6500	320000000	128000000	1.2

Verifiche a pressoflessione delle travi in muratura in combinazioni non sismiche

Sezione	γM	N	M	Mu	Comb.	c.s.	Verifica
ini.	3	-474	-0.52	127.85	SLU 70	245.4	Si
fin.	3	-470	-22.82	127.85	SLU 70	5.6	Si
ini.	3	-509	-4.61	127.85	SLU 80	27.73	Si
fin.	3	-487	-22.59	127.85	SLU 80	5.66	Si
ini.	3	-476	2.03	127.85	SLU 72	62.93	Si
fin.	3	-483	-24.03	127.85	SLU 72	5.32	Si
ini.	3	-427	6.23	127.85	SLU 50	20.51	Si
fin.	3	-451	-23.48	127.85	SLU 50	5.44	Si
ini.	3	-424	3.68	127.85	SLU 48	34.74	Si
fin.	3	-438	-22.27	127.85	SLU 48	5.74	Si
ini.	3	-425	3.81	127.85	SLU 49	33.51	Si
fin.	3	-439	-22.25	127.85	SLU 49	5.75	Si
ini.	3	-473	-0.66	127.85	SLU 69	194.9	Si
fin.	3	-468	-22.84	127.85	SLU 69	5.6	Si
ini.	3	-508	-4.74	127.85	SLU 79	26.95	Si
fin.	3	-486	-22.61	127.85	SLU 79	5.65	Si
ini.	3	-475	1.9	127.85	SLU 71	67.41	Si
fin.	3	-482	-24.05	127.85	SLU 71	5.32	Si
ini.	3	-428	6.37	127.85	SLU 51	20.08	Si
fin.	3	-453	-23.46	127.85	SLU 51	5.45	Si

Verifiche a taglio delle travi in muratura secondo §C8.7.1.3.1 in combinazioni non sismiche

Sezione	γM	N	M	V	Vt	Vp	Vt fess. diag.	Vt,lim	Comb.	c.s.	Verifica
ini.	3	-475	1.9	-375			342	133	SLU 71	0.36	No
fin.	3	-482	-24.05	758			344	134	SLU 71	0.18	No
ini.	3	-509	-4.61	-352			351	136	SLU 80	0.39	No
fin.	3	-487	-22.59	782			346	134	SLU 80	0.17	No
ini.	3	-459	-0.41	-341			338	132	SLU 58	0.39	No
fin.	3	-455	-22.05	720			337	131	SLU 58	0.18	No
ini.	3	-460	-0.27	-343			338	132	SLU 59	0.38	No
fin.	3	-457	-22.03	723			337	132	SLU 59	0.18	No
ini.	3	-474	-0.52	-351			342	133	SLU 70	0.38	No
fin.	3	-470	-22.82	739			341	133	SLU 70	0.18	No
ini.	3	-476	2.03	-377			343	133	SLU 72	0.35	No
fin.	3	-483	-24.03	761			345	134	SLU 72	0.18	No
ini.	3	-508	-4.74	-349			351	136	SLU 79	0.39	No
fin.	3	-486	-22.61	779			345	134	SLU 79	0.17	No
ini.	3	-506	-7.16	-325			351	136	SLU 78	0.42	No
fin.	3	-474	-21.38	760			342	133	SLU 78	0.18	No
ini.	3	-505	-7.3	-323			350	136	SLU 77	0.42	No
fin.	3	-472	-21.4	757			342	133	SLU 77	0.18	No
ini.	3	-473	-0.66	-348			342	133	SLU 69	0.38	No
fin.	3	-468	-22.84	736			341	133	SLU 69	0.18	No

Verifiche a pressoflessione delle travi in muratura in combinazioni sismiche

Sezione	γM	N	M	Mu	Comb.	c.s.	Verifica
ini.	2	-1416	-263.27	191.78	SLV 12	0.73	No
fin.	2	5	-23.83	191.78	SLV 12	8.05	Si
ini.	2	916	255.73	191.78	SLV 6	0.75	No
fin.	2	-464	4.49	191.78	SLV 6	42.67	Si
ini.	2	-1416	-263.27	191.78	SLV 11	0.73	No
fin.	2	5	-23.83	191.78	SLV 11	8.05	Si

Sezione	γM	N	M	Mu	Comb.	c.s.	Verifica
ini.	2	-1040	-184.84	191.78	SLV 7	1.04	Si
fin.	2	-14	-39.54	191.78	SLV 7	4.85	Si
ini.	2	-1169	-200.56	191.78	SLV 16	0.96	No
fin.	2	-129	9.91	191.78	SLV 16	19.36	Si
ini.	2	916	255.73	191.78	SLV 5	0.75	No
fin.	2	-464	4.49	191.78	SLV 5	42.67	Si
ini.	2	-1169	-200.56	191.78	SLV 15	0.96	No
fin.	2	-129	9.91	191.78	SLV 15	19.36	Si
ini.	2	670	193.02	191.78	SLV 2	0.99	No
fin.	2	-330	-29.24	191.78	SLV 2	6.56	Si
ini.	2	-1040	-184.84	191.78	SLV 8	1.04	Si
fin.	2	-14	-39.54	191.78	SLV 8	4.85	Si
ini.	2	670	193.02	191.78	SLV 1	0.99	No
fin.	2	-330	-29.24	191.78	SLV 1	6.56	Si

Verifiche a taglio delle travi in muratura secondo §C8.7.1.3.1 in combinazioni sismiche

Sezione	γM	N	M	V	Vt	Vp	Vt fess. diag.	Vt,lim	Comb.	c.s.	Verifica
ini.	2	-582	-68.39	284			479	188	SLV 14	0.66	No
fin.	2	-264	23.12	820			394	155	SLV 14	0.19	No
ini.	2	541	177.3	-696			323	0	SLV 10	0	No
fin.	2	-445	20.2	1017			442	175	SLV 10	0.17	No
ini.	2	916	255.73	-1084			323	0	SLV 6	0	No
fin.	2	-464	4.49	844			447	177	SLV 6	0.21	No
ini.	2	83	60.85	-556			323	109	SLV 3	0.2	No
fin.	2	-195	-42.45	-95			376	147	SLV 3	1.55	Si
ini.	2	916	255.73	-1084			323	0	SLV 5	0	No
fin.	2	-464	4.49	844			447	177	SLV 5	0.21	No
ini.	2	670	193.02	-1008			323	0	SLV 2	0	No
fin.	2	-330	-29.24	245			411	163	SLV 2	0.66	No
ini.	2	-582	-68.39	284			479	188	SLV 13	0.66	No
fin.	2	-264	23.12	820			394	155	SLV 13	0.19	No
ini.	2	83	60.85	-556			323	109	SLV 4	0.2	No
fin.	2	-195	-42.45	-95			376	147	SLV 4	1.55	Si
ini.	2	670	193.02	-1008			323	0	SLV 1	0	No
fin.	2	-330	-29.24	245			411	163	SLV 1	0.66	No
ini.	2	541	177.3	-696			323	0	SLV 9	0	No
fin.	2	-445	20.2	1017			442	175	SLV 9	0.17	No

Tabella dei coefficienti di sicurezza minimi

Stato limite	Coeff.s.	Comb.	Verifica
PF_SLV	0.728	SLV 11	No
V_SLV	0	SLV 1	No
PF_SLU	5.317	SLU 71	Si
V_SLU	0.172	SLU 80	No

Trave di accoppiamento 171

Verifiche condotte secondo D.M. 17-01-18 (N.T.C.)

Dati geometrici

X ini.	Y ini.	Z ini.inf.	Z ini.sup.	H ini.	X fin.	Y fin.	Z fin.inf.	Z fin.sup	H fin.	Luce	Spessore	R. Trazione
-6.467	-3.169	12.05	12.95	0.9	-7.467	-3.169	12.05	12.95	0.9	1	0.28	30000

Caratteristiche del materiale

(Circolare 7 21-01-19 C8.5.I) Muratura in mattoni pieni e malta di calce LC2_Corti

fb_	fhk	fvk0	fhmedio	τ0	fv0	μ	ϕ	fvk,lim	E	G	FC
120000			172500	9000	20000	0.577	0.767	6500	320000000	128000000	1.2

Verifiche a pressoflessione delle travi in muratura in combinazioni non sismiche

Sezione	γM	N	M	Mu	Comb.	c.s.	Verifica
ini.	3	-389	181.57	1150.68	SLU 65	6.34	Si
fin.	3	276	-323.74	1150.68	SLU 65	3.55	Si
ini.	3	-356	182.37	1150.68	SLU 73	6.31	Si
fin.	3	262	-349.6	1150.68	SLU 73	3.29	Si
ini.	3	-307	175.61	1150.68	SLU 82	6.55	Si
fin.	3	227	-347.31	1150.68	SLU 82	3.31	Si
ini.	3	-322	168.1	1150.68	SLU 61	6.85	Si
fin.	3	201	-308.77	1150.68	SLU 61	3.73	Si
ini.	3	-222	150.47	1150.68	SLU 76	7.65	Si
fin.	3	292	-333.34	1150.68	SLU 76	3.45	Si
ini.	3	-253	164.96	1150.68	SLU 81	6.98	Si
fin.	3	183	-327.24	1150.68	SLU 81	3.52	Si
ini.	3	-119	133.06	1150.68	SLU 83	8.65	Si
fin.	3	213	-310.98	1150.68	SLU 83	3.7	Si
ini.	3	-212	153.12	1150.68	SLU 75	7.51	Si
fin.	3	255	-324.22	1150.68	SLU 75	3.55	Si
ini.	3	-372	174.86	1150.68	SLU 52	6.58	Si
fin.	3	237	-311.07	1150.68	SLU 52	3.7	Si
ini.	3	-172	143.71	1150.68	SLU 84	8.01	Si
fin.	3	257	-331.05	1150.68	SLU 84	3.48	Si

Verifiche a taglio delle travi in muratura secondo §C8.7.1.3.1 in combinazioni non sismiche

Sezione	γM	N	M	V	Vt	Vp	Vt fess. diag.	Vt,lim	Comb.	c.s.	Verifica
ini.	3	-280	148.27	-439			974	380	SLU 31	0.86	No
fin.	3	228	-301.66	-1088			873	280	SLU 31	0.26	No
ini.	3	-255	149.67	-615			965	375	SLU 68	0.61	No

Sezione	γM	N	M	V	Vt	Vp	Vt fess. diag.	Vt,lim	Comb.	c.s.	Verifica
fin.	3	306	-307.48	-1022			873	262	SLU 68	0.26	No
ini.	3	-307	175.61	-531			984	384	SLU 82	0.72	No
fin.	3	227	-347.31	-1230			873	281	SLU 82	0.23	No
ini.	3	-372	174.86	-647			1007	395	SLU 52	0.61	No
fin.	3	237	-311.07	-1092			873	279	SLU 52	0.26	No
ini.	3	-222	150.47	-506			953	370	SLU 76	0.73	No
fin.	3	292	-333.34	-1145			873	265	SLU 76	0.23	No
ini.	3	-356	182.37	-607			1002	392	SLU 73	0.65	No
fin.	3	262	-349.6	-1238			873	273	SLU 73	0.22	No
ini.	3	-212	153.12	-535			950	368	SLU 75	0.69	No
fin.	3	255	-324.22	-1077			873	274	SLU 75	0.25	No
ini.	3	-253	164.96	-488			965	375	SLU 81	0.77	No
fin.	3	183	-327.24	-1138			873	291	SLU 81	0.26	No
ini.	3	-172	143.71	-431			936	361	SLU 84	0.84	No
fin.	3	257	-331.05	-1137			873	274	SLU 84	0.24	No
ini.	3	-389	181.57	-715			1014	398	SLU 65	0.56	No
fin.	3	276	-323.74	-1114			873	269	SLU 65	0.24	No

Verifiche a pressoflessione delle travi in muratura in combinazioni sismiche

Sezione	γM	N	M	Mu	Comb.	c.s.	Verifica
ini.	2	-1518	710.29	1726.01	SLV 4	2.43	Si
fin.	2	1415	-830.61	1726.01	SLV 4	2.08	Si
ini.	2	-1518	710.29	1726.01	SLV 3	2.43	Si
fin.	2	1415	-830.61	1726.01	SLV 3	2.08	Si
ini.	2	-1354	596.29	1726.01	SLV 6	2.89	Si
fin.	2	1728	-1044.72	1726.01	SLV 6	1.65	Si
ini.	2	905	-347.09	1726.01	SLV 12	4.97	Si
fin.	2	-1436	600.27	1726.01	SLV 12	2.88	Si
ini.	2	-1926	873.21	1726.01	SLV 1	1.98	Si
fin.	2	2077	-1182.89	1726.01	SLV 1	1.46	Si
ini.	2	905	-347.09	1726.01	SLV 11	4.97	Si
fin.	2	-1436	600.27	1726.01	SLV 11	2.88	Si
ini.	2	1477	-624.02	1726.01	SLV 15	2.77	Si
fin.	2	-1785	738.43	1726.01	SLV 15	2.34	Si
ini.	2	-1354	596.29	1726.01	SLV 5	2.89	Si
fin.	2	1728	-1044.72	1726.01	SLV 5	1.65	Si
ini.	2	-1926	873.21	1726.01	SLV 2	1.98	Si
fin.	2	2077	-1182.89	1726.01	SLV 2	1.46	Si
ini.	2	1477	-624.02	1726.01	SLV 16	2.77	Si
fin.	2	-1785	738.43	1726.01	SLV 16	2.34	Si

Verifiche a taglio delle travi in muratura secondo §C8.7.1.3.1 in combinazioni sismiche

Sezione	γM	N	M	V	Vt	Vp	Vt fess. diag.	Vt,lim	Comb.	c.s.	Verifica
ini.	2	-1518	710.29	-2567			1857	732	SLV 3	0.29	No
fin.	2	1415	-830.61	-3484			1310	0	SLV 3	0	No
ini.	2	-1354	596.29	-2593			1798	710	SLV 6	0.27	No
fin.	2	1728	-1044.72	-3284			1310	0	SLV 6	0	No
ini.	2	1069	-461.09	1623			1310	192	SLV 14	0.12	No
fin.	2	-1123	386.15	1999			1715	678	SLV 14	0.34	No
ini.	2	-1926	873.21	-3388			2004	784	SLV 2	0.23	No
fin.	2	2077	-1182.89	-4430			1310	0	SLV 2	0	No
ini.	2	1477	-624.02	2444			1310	0	SLV 16	0	No
fin.	2	-1785	738.43	2945			1953	766	SLV 16	0.26	No
ini.	2	1477	-624.02	2444			1310	0	SLV 15	0	No
fin.	2	-1785	738.43	2945			1953	766	SLV 15	0.26	No
ini.	2	1069	-461.09	1623			1310	192	SLV 13	0.12	No
fin.	2	-1123	386.15	1999			1715	678	SLV 13	0.34	No
ini.	2	-1926	873.21	-3388			2004	784	SLV 1	0.23	No
fin.	2	2077	-1182.89	-4430			1310	0	SLV 1	0	No
ini.	2	-1518	710.29	-2567			1857	732	SLV 4	0.29	No
fin.	2	1415	-830.61	-3484			1310	0	SLV 4	0	No
ini.	2	-1354	596.29	-2593			1798	710	SLV 5	0.27	No
fin.	2	1728	-1044.72	-3284			1310	0	SLV 5	0	No

Tabella dei coefficienti di sicurezza minimi

Stato limite	Coeff.s.	Comb.	Verifica
PF_SLV	1.459	SLV 1	Si
V_SLV	0	SLV 1	No
PF_SLU	3.291	SLU 73	Si
V_SLU	0.22	SLU 73	No

Trave di accoppiamento 172

Verifiche condotte secondo D.M. 17-01-18 (N.T.C.)

Dati geometrici

X ini.	Y ini.	Z ini.inf.	Z ini.sup.	H ini.	X fin.	Y fin.	Z fin.inf.	Z fin.sup	H fin.	Luce	Spessore	R. Trazione
-6.467	-3.169	14.85	15.15	0.3	-7.467	-3.169	14.85	15.15	0.3	1	0.28	30000

Caratteristiche del materiale

(Circolare 7 21-01-19 C8.5.I) Muratura in mattoni pieni e malta di calce LC2_Corti

fb_	fhk	fvk0	fhmedio	τ0	fv0	μ	ϕ	fvk,lim	E	G	FC
120000			172500	9000	20000	0.577	0.767	6500	320000000	128000000	1.2

Verifiche a pressoflessione delle travi in muratura in combinazioni non sismiche

Sezione	γM	N	M	Mu	Comb.	c.s.	Verifica

Sezione	γM	N	M	Mu	Comb.	c.s.	Verifica
ini.	3	470	-19.85	127.85	SLU 53	6.44	Si
fin.	3	374	0.66	127.85	SLU 53	192.69	Si
ini.	3	459	-20.55	127.85	SLU 6	6.22	Si
fin.	3	389	5.51	127.85	SLU 6	23.19	Si
ini.	3	591	-22.09	127.85	SLU 69	5.79	Si
fin.	3	481	5.59	127.85	SLU 69	22.88	Si
ini.	3	504	-20.42	127.85	SLU 27	6.26	Si
fin.	3	423	7.13	127.85	SLU 27	17.93	Si
ini.	3	582	-23.34	127.85	SLU 77	5.48	Si
fin.	3	495	9.22	127.85	SLU 77	13.87	Si
ini.	3	496	-21.66	127.85	SLU 35	5.9	Si
fin.	3	437	10.76	127.85	SLU 35	11.88	Si
ini.	3	545	-22.22	127.85	SLU 48	5.75	Si
fin.	3	448	3.97	127.85	SLU 48	32.2	Si
ini.	3	450	-21.79	127.85	SLU 14	5.87	Si
fin.	3	403	9.14	127.85	SLU 14	13.98	Si
ini.	3	516	-19.72	127.85	SLU 74	6.48	Si
fin.	3	408	2.28	127.85	SLU 74	56.09	Si
ini.	3	536	-23.47	127.85	SLU 56	5.45	Si
fin.	3	461	7.6	127.85	SLU 56	16.82	Si

Verifiche a taglio delle travi in muratura secondo §C8.7.1.3.1 in combinazioni non sismiche

Sezione	γM	N	M	V	Vt	Vp	Vt fess. diag.	Vt,lim	Comb.	c.s.	Verifica
ini.	3	570	-1.97	133			216	0	SLU 61	0	No
fin.	3	448	-4.84	-198			216	0	SLU 61	0	No
ini.	3	470	-19.85	221			216	0	SLU 53	0	No
fin.	3	374	0.66	-237			216	0	SLU 53	0	No
ini.	3	414	-8.9	160			216	0	SLU 60	0	No
fin.	3	311	0.35	-197			216	0	SLU 60	0	No
ini.	3	744	-0.43	126			216	0	SLU 55	0	No
fin.	3	621	-2.92	-189			216	0	SLU 55	0	No
ini.	3	536	-23.47	234			216	0	SLU 56	0	No
fin.	3	461	7.6	-221			216	0	SLU 56	0	No
ini.	3	693	-16.54	208			216	0	SLU 57	0	No
fin.	3	598	2.41	-223			216	0	SLU 57	0	No
ini.	3	706	-8.67	158			216	0	SLU 59	0	No
fin.	3	617	7.48	-172			216	0	SLU 59	0	No
ini.	3	550	-15.59	185			216	0	SLU 58	0	No
fin.	3	480	12.67	-171			216	0	SLU 58	0	No
ini.	3	339	-5.44	117			216	0	SLU 1	0	No
fin.	3	233	-3.29	-167			216	33	SLU 1	0.2	No
ini.	3	627	-12.93	194			216	0	SLU 54	0	No
fin.	3	510	-4.53	-238			216	0	SLU 54	0	No

Verifiche a pressoflessione delle travi in muratura in combinazioni sismiche

Sezione	γM	N	M	Mu	Comb.	c.s.	Verifica
ini.	2	395	101.92	191.78	SLV 4	1.88	Si
fin.	2	-592	-135.15	191.78	SLV 4	1.42	Si
ini.	2	1465	169.31	191.78	SLV 1	1.13	Si
fin.	2	168	-157.11	191.78	SLV 1	1.22	Si
ini.	2	-1606	-160.49	191.78	SLV 11	1.19	Si
fin.	2	-881	78.11	191.78	SLV 11	2.46	Si
ini.	2	-1606	-160.49	191.78	SLV 12	1.19	Si
fin.	2	-881	78.11	191.78	SLV 12	2.46	Si
ini.	2	2307	148.97	191.78	SLV 5	1.29	Si
fin.	2	1375	-81.7	191.78	SLV 5	2.35	Si
ini.	2	1465	169.31	191.78	SLV 2	1.13	Si
fin.	2	168	-157.11	191.78	SLV 2	1.22	Si
ini.	2	-764	-180.83	191.78	SLV 16	1.06	Si
fin.	2	326	153.52	191.78	SLV 16	1.25	Si
ini.	2	395	101.92	191.78	SLV 3	1.88	Si
fin.	2	-592	-135.15	191.78	SLV 3	1.42	Si
ini.	2	-764	-180.83	191.78	SLV 15	1.06	Si
fin.	2	326	153.52	191.78	SLV 15	1.25	Si
ini.	2	2307	148.97	191.78	SLV 6	1.29	Si
fin.	2	1375	-81.7	191.78	SLV 6	2.35	Si

Verifiche a taglio delle travi in muratura secondo §C8.7.1.3.1 in combinazioni sismiche

Sezione	γM	N	M	V	Vt	Vp	Vt fess. diag.	Vt,lim	Comb.	c.s.	Verifica
ini.	2	1959	64.15	-253			323	0	SLV 10	0	No
fin.	2	1650	4.91	-407			323	0	SLV 10	0	No
ini.	2	1465	169.31	-563			323	0	SLV 1	0	No
fin.	2	168	-157.11	-809			323	94	SLV 1	0.12	No
ini.	2	2307	148.97	-567			323	0	SLV 5	0	No
fin.	2	1375	-81.7	-721			323	0	SLV 5	0	No
ini.	2	305	-113.44	486			323	64	SLV 13	0.13	No
fin.	2	1086	131.56	239			323	0	SLV 13	0	No
ini.	2	305	-113.44	486			323	64	SLV 14	0.13	No
fin.	2	1086	131.56	239			323	0	SLV 14	0	No
ini.	2	1465	169.31	-563			323	0	SLV 2	0	No
fin.	2	168	-157.11	-809			323	94	SLV 2	0.12	No
ini.	2	1959	64.15	-253			323	0	SLV 9	0	No
fin.	2	1650	4.91	-407			323	0	SLV 9	0	No
ini.	2	-764	-180.83	804			527	204	SLV 15	0.25	No
fin.	2	326	153.52	478			323	57	SLV 15	0.12	No
ini.	2	-764	-180.83	804			527	204	SLV 16	0.25	No
fin.	2	326	153.52	478			323	57	SLV 16	0.12	No
ini.	2	2307	148.97	-567			323	0	SLV 6	0	No
fin.	2	1375	-81.7	-721			323	0	SLV 6	0	No

Tabella dei coefficienti di sicurezza minimi

Stato limite	Coeff.s.	Comb.	Verifica
PF_SLV	1.061	SLV 15	Si
V_SLV	0	SLV 1	No
PF_SLU	5.448	SLU 56	Si
V_SLU	0	SLU 1	No

Trave di accoppiamento 173

Verifiche condotte secondo D.M. 17-01-18 (N.T.C.)

Dati geometrici

X ini.	Y ini.	Z ini.inf.	Z ini.sup.	H ini.	X fin.	Y fin.	Z fin.inf.	Z fin.sup	H fin.	Luce	Spessore	R. Trazione
-5.437	-3.169	12.05	14.05	2	-5.937	-3.169	12.05	14.05	2	0.5	0.28	30000

Caratteristiche del materiale

(Circolare 7 21-01-19 C8.5.I) Muratura in mattoni pieni e malta di calce LC2_Corti

fb_	fhk	fvk0	fhmedio	τ0	fv0	μ	ϕ	fvk,lim	E	G	FC
120000			172500	9000	20000	0.577	0.767	6500	320000000	128000000	1.2

Verifiche a pressoflessione delle travi in muratura in combinazioni non sismiche

Sezione	γM	N	M	Mu	Comb.	c.s.	Verifica
ini.	3	-364	274.51	5682.35	SLU 53	20.7	Si
fin.	3	-143	169.72	5682.35	SLU 53	33.48	Si
ini.	3	-366	288.11	5682.35	SLU 75	19.72	Si
fin.	3	-145	148.32	5682.35	SLU 75	38.31	Si
ini.	3	-440	272.85	5682.35	SLU 60	20.83	Si
fin.	3	-223	144.48	5682.35	SLU 60	39.33	Si
ini.	3	-442	286.44	5682.35	SLU 82	19.84	Si
fin.	3	-224	123.08	5682.35	SLU 82	46.17	Si
ini.	3	-442	269.92	5682.35	SLU 73	21.05	Si
fin.	3	-264	80.08	5682.35	SLU 73	70.96	Si
ini.	3	-366	268.17	5682.35	SLU 66	21.19	Si
fin.	3	-163	155.85	5682.35	SLU 66	36.46	Si
ini.	3	-442	293.73	5682.35	SLU 81	19.35	Si
fin.	3	-194	165.29	5682.35	SLU 81	34.38	Si
ini.	3	-227	275.34	5682.35	SLU 77	20.64	Si
fin.	3	31	204.15	5682.35	SLU 77	27.83	Si
ini.	3	-303	273.68	5682.35	SLU 83	20.76	Si
fin.	3	-48	178.91	5682.35	SLU 83	31.76	Si
ini.	3	-365	295.39	5682.35	SLU 74	19.24	Si
fin.	3	-115	190.53	5682.35	SLU 74	29.82	Si

Verifiche a taglio delle travi in muratura secondo §C8.7.1.3.1 in combinazioni non sismiche

Sezione	γM	N	M	V	Vt	Vp	Vt fess. diag.	Vt,lim	Comb.	c.s.	Verifica
ini.	3	-442	286.44	-998			2333	903	SLU 82	0.9	No
fin.	3	-224	123.08	-525			2246	859	SLU 82	1.64	Si
ini.	3	-364	274.51	-999			2302	887	SLU 53	0.89	No
fin.	3	-143	169.72	-292			2214	842	SLU 53	2.88	Si
ini.	3	-227	275.34	-987			2247	860	SLU 77	0.87	No
fin.	3	31	204.15	-325			2157	805	SLU 77	2.48	Si
ini.	3	-365	295.39	-1039			2303	887	SLU 74	0.85	No
fin.	3	-115	190.53	-373			2203	836	SLU 74	2.24	Si
ini.	3	-364	267.22	-989			2302	887	SLU 54	0.9	No
fin.	3	-173	127.52	-338			2226	848	SLU 54	2.51	Si
ini.	3	-227	268.06	-976			2248	860	SLU 78	0.88	No
fin.	3	2	161.94	-371			2157	811	SLU 78	2.18	Si
ini.	3	-366	268.17	-999			2303	888	SLU 66	0.89	No
fin.	3	-163	155.85	-255			2222	846	SLU 66	3.32	Si
ini.	3	-442	293.73	-1009			2333	903	SLU 81	0.89	No
fin.	3	-194	165.29	-479			2234	853	SLU 81	1.78	Si
ini.	3	-366	288.11	-1028			2303	888	SLU 75	0.86	No
fin.	3	-145	148.32	-419			2215	842	SLU 75	2.01	Si
ini.	3	-366	260.89	-988			2303	888	SLU 67	0.9	No
fin.	3	-193	113.64	-301			2234	852	SLU 67	2.83	Si

Verifiche a pressoflessione delle travi in muratura in combinazioni sismiche

Sezione	γM	N	M	Mu	Comb.	c.s.	Verifica
ini.	2	-787	382.48	8523.53	SLV 11	22.29	Si
fin.	2	832	694.27	8523.53	SLV 11	12.28	Si
ini.	2	-787	382.48	8523.53	SLV 12	22.29	Si
fin.	2	832	694.27	8523.53	SLV 12	12.28	Si
ini.	2	-1193	663.93	8523.53	SLV 2	12.84	Si
fin.	2	-1603	-325.66	8523.53	SLV 2	26.17	Si
ini.	2	514	-265.48	8523.53	SLV 16	32.11	Si
fin.	2	1214	514.41	8523.53	SLV 16	16.57	Si
ini.	2	-1438	725.12	8523.53	SLV 7	11.75	Si
fin.	2	106	535.99	8523.53	SLV 7	15.9	Si
ini.	2	-1438	725.12	8523.53	SLV 8	11.75	Si
fin.	2	106	535.99	8523.53	SLV 8	15.9	Si
ini.	2	-1193	663.93	8523.53	SLV 1	12.84	Si
fin.	2	-1603	-325.66	8523.53	SLV 1	26.17	Si
ini.	2	-1657	876.67	8523.53	SLV 3	9.72	Si
fin.	2	-1205	-13.2	8523.53	SLV 3	645.5	Si
ini.	2	514	-265.48	8523.53	SLV 15	32.11	Si
fin.	2	1214	514.41	8523.53	SLV 15	16.57	Si
ini.	2	-1657	876.67	8523.53	SLV 4	9.72	Si

Sezione	γM	N	M	Mu	Comb.	c.s.	Verifica
fin.	2	-1205	-13.2	8523.53	SLV 4	645.5	Si

Verifiche a taglio delle travi in muratura secondo §C8.7.1.3.1 in combinazioni sismiche

Sezione	γM	N	M	V	Vt	Vp	Vt fess. diag.	Vt,lim	Comb.	c.s.	Verifica
ini.	2	-1193	663.93	-2048			3712	1454	SLV 2	0.71	No
fin.	2	-1603	-325.66	-2262			3876	1527	SLV 2	0.68	No
ini.	2	977	-478.23	1269			3235	982	SLV 14	0.77	No
fin.	2	816	201.95	2579			3235	1025	SLV 14	0.4	No
ini.	2	514	-265.48	578			3235	1100	SLV 15	1.9	Si
fin.	2	1214	514.41	1753			3235	916	SLV 15	0.52	No
ini.	2	977	-478.23	1269			3235	982	SLV 13	0.77	No
fin.	2	816	201.95	2579			3235	1025	SLV 13	0.4	No
ini.	2	-1438	725.12	-2385			3810	1498	SLV 7	0.63	No
fin.	2	106	535.99	-2359			3235	1194	SLV 7	0.51	No
ini.	2	-1193	663.93	-2048			3712	1454	SLV 1	0.71	No
fin.	2	-1603	-325.66	-2262			3876	1527	SLV 1	0.68	No
ini.	2	514	-265.48	578			3235	1100	SLV 16	1.9	Si
fin.	2	1214	514.41	1753			3235	916	SLV 16	0.52	No
ini.	2	-1657	876.67	-2740			3898	1536	SLV 3	0.56	No
fin.	2	-1205	-13.2	-3088			3717	1456	SLV 3	0.47	No
ini.	2	-1657	876.67	-2740			3898	1536	SLV 4	0.56	No
fin.	2	-1205	-13.2	-3088			3717	1456	SLV 4	0.47	No
ini.	2	-1438	725.12	-2385			3810	1498	SLV 8	0.63	No
fin.	2	106	535.99	-2359			3235	1194	SLV 8	0.51	No

Tabella dei coefficienti di sicurezza minimi

Stato limite	Coeff.s.	Comb.	Verifica
PF_SLV	9.723	SLV 3	Si
V_SLV	0.397	SLV 13	No
PF_SLU	19.237	SLU 74	Si
V_SLU	0.855	SLU 74	No

Trave di accoppiamento 174

Verifiche condotte secondo D.M. 17-01-18 (N.T.C.)

Dati geometrici

X ini.	Y ini.	Z ini.inf.	Z ini.sup.	H ini.	X fin.	Y fin.	Z fin.inf.	Z fin.sup	H fin.	Luce	Spessore	R. Trazione
-5.437	-3.169	14.85	15.15	0.3	-5.937	-3.169	14.85	15.15	0.3	0.5	0.28	30000

Caratteristiche del materiale

(Circolare 7 21-01-19 C8.5.I) Muratura in mattoni pieni e malta di calce LC2_Corti

fb_	fhk	fvk0	fhmedio	τ0	fv0	μ	ϕ	fvk,lim	E	G	FC
120000			172500	9000	20000	0.577	0.767	6500	320000000	128000000	1.2

Verifiche a pressoflessione delle travi in muratura in combinazioni non sismiche

Sezione	γM	N	M	Mu	Comb.	c.s.	Verifica
ini.	3	279	68.56	127.85	SLU 34	1.86	Si
fin.	3	279	-58.5	127.85	SLU 34	2.19	Si
ini.	3	232	70.05	127.85	SLU 73	1.83	Si
fin.	3	232	-59.02	127.85	SLU 73	2.17	Si
ini.	3	301	72.08	127.85	SLU 55	1.77	Si
fin.	3	301	-61.53	127.85	SLU 55	2.08	Si
ini.	3	306	68.19	127.85	SLU 26	1.87	Si
fin.	3	306	-57.64	127.85	SLU 26	2.22	Si
ini.	3	259	69.68	127.85	SLU 65	1.83	Si
fin.	3	259	-58.16	127.85	SLU 65	2.2	Si
ini.	3	327	71.71	127.85	SLU 47	1.78	Si
fin.	3	327	-60.67	127.85	SLU 47	2.11	Si
ini.	3	320	73.94	127.85	SLU 76	1.73	Si
fin.	3	320	-63.12	127.85	SLU 76	2.03	Si
ini.	3	347	73.58	127.85	SLU 68	1.74	Si
fin.	3	347	-62.26	127.85	SLU 68	2.05	Si
ini.	3	213	68.18	127.85	SLU 52	1.88	Si
fin.	3	213	-57.43	127.85	SLU 52	2.23	Si
ini.	3	239	67.81	127.85	SLU 44	1.89	Si
fin.	3	239	-56.57	127.85	SLU 44	2.26	Si

Verifiche a taglio delle travi in muratura secondo §C8.7.1.3.1 in combinazioni non sismiche

Sezione	γM	N	M	V	Vt	Vp	Vt fess. diag.	Vt,lim	Comb.	c.s.	Verifica
ini.	3	326	30.11	-78			216	0	SLU 37	0	No
fin.	3	326	-27.9	-154			216	0	SLU 37	0	No
ini.	3	297	30.8	-83			216	0	SLU 35	0	No
fin.	3	297	-29.7	-159			216	0	SLU 35	0	No
ini.	3	399	58.67	-170			216	0	SLU 51	0	No
fin.	3	399	-50.9	-268			216	0	SLU 51	0	No
ini.	3	323	30.43	-81			216	0	SLU 27	0	No
fin.	3	323	-28.84	-156			216	0	SLU 27	0	No
ini.	3	353	29.74	-76			216	0	SLU 29	0	No
fin.	3	353	-27.04	-151			216	0	SLU 29	0	No
ini.	3	292	57.16	-164			216	0	SLU 84	0	No
fin.	3	292	-49.61	-263			216	0	SLU 84	0	No
ini.	3	348	55.83	-173			216	0	SLU 28	0	No
fin.	3	348	-49.67	-249			216	0	SLU 28	0	No
ini.	3	321	56.2	-176			216	0	SLU 36	0	No
fin.	3	321	-50.52	-251			216	0	SLU 36	0	No

Sezione	γM	N	M	V	Vt	Vp	Vt fess. diag.	Vt,lim	Comb.	c.s.	Verifica
ini.	3	351	55.52	-171			216	0	SLU 38	0	No
fin.	3	351	-48.72	-246			216	0	SLU 38	0	No
ini.	3	378	55.15	-168			216	0	SLU 30	0	No
fin.	3	378	-47.86	-244			216	0	SLU 30	0	No

Verifiche a pressoflessione delle travi in muratura in combinazioni sismiche

Sezione	γM	N	M	Mu	Comb.	c.s.	Verifica
ini.	2	1599	116.35	191.78	SLV 5	1.65	Si
fin.	2	1557	-76.5	191.78	SLV 5	2.51	Si
ini.	2	705	85.42	191.78	SLV 1	2.25	Si
fin.	2	659	-50.23	191.78	SLV 1	3.82	Si
ini.	2	705	85.42	191.78	SLV 2	2.25	Si
fin.	2	659	-50.23	191.78	SLV 2	3.82	Si
ini.	2	-1211	-51.17	191.78	SLV 7	3.75	Si
fin.	2	-1192	30.91	191.78	SLV 7	6.2	Si
ini.	2	-1211	-51.17	191.78	SLV 8	3.75	Si
fin.	2	-1192	30.91	191.78	SLV 8	6.2	Si
ini.	2	-1288	-74.91	191.78	SLV 11	2.56	Si
fin.	2	-1247	40.62	191.78	SLV 11	4.72	Si
ini.	2	1522	92.61	191.78	SLV 10	2.07	Si
fin.	2	1503	-66.79	191.78	SLV 10	2.87	Si
ini.	2	1522	92.61	191.78	SLV 9	2.07	Si
fin.	2	1503	-66.79	191.78	SLV 9	2.87	Si
ini.	2	-1288	-74.91	191.78	SLV 12	2.56	Si
fin.	2	-1247	40.62	191.78	SLV 12	4.72	Si
ini.	2	1599	116.35	191.78	SLV 6	1.65	Si
fin.	2	1557	-76.5	191.78	SLV 6	2.51	Si

Verifiche a taglio delle travi in muratura secondo §C8.7.1.3.1 in combinazioni sismiche

Sezione	γM	N	M	V	Vt	Vp	Vt fess. diag.	Vt,lim	Comb.	c.s.	Verifica
ini.	2	449	6.28	-154			323	0	SLV 14	0	No
fin.	2	477	-17.88	-122			323	0	SLV 14	0	No
ini.	2	1599	116.35	-447			323	0	SLV 5	0	No
fin.	2	1557	-76.5	-548			323	0	SLV 5	0	No
ini.	2	1522	92.61	-443			323	0	SLV 10	0	No
fin.	2	1503	-66.79	-480			323	0	SLV 10	0	No
ini.	2	-1211	-51.17	364			646	240	SLV 7	0.66	No
fin.	2	-1192	30.91	250			641	239	SLV 7	0.95	No
ini.	2	705	85.42	-168			323	0	SLV 2	0	No
fin.	2	659	-50.23	-347			323	0	SLV 2	0	No
ini.	2	449	6.28	-154			323	0	SLV 13	0	No
fin.	2	477	-17.88	-122			323	0	SLV 13	0	No
ini.	2	-1211	-51.17	364			646	240	SLV 8	0.66	No
fin.	2	-1192	30.91	250			641	239	SLV 8	0.95	No
ini.	2	1522	92.61	-443			323	0	SLV 9	0	No
fin.	2	1503	-66.79	-480			323	0	SLV 9	0	No
ini.	2	1599	116.35	-447			323	0	SLV 6	0	No
fin.	2	1557	-76.5	-548			323	0	SLV 6	0	No
ini.	2	705	85.42	-168			323	0	SLV 1	0	No
fin.	2	659	-50.23	-347			323	0	SLV 1	0	No

Tabella dei coefficienti di sicurezza minimi

Stato limite	Coeff.s.	Comb.	Verifica
PF_SLV	1.648	SLV 5	Si
V_SLV	0	SLV 1	No
PF_SLU	1.729	SLU 76	Si
V_SLU	0	SLU 5	No

Trave di accoppiamento 175

Verifiche condotte secondo D.M. 17-01-18 (N.T.C.)

Dati geometrici

X ini.	Y ini.	Z ini.inf.	Z ini.sup.	H ini.	X fin.	Y fin.	Z fin.inf.	Z fin.sup	H fin.	Luce	Spessore	R. Trazione
-1.952	-3.169	12.05	12.95	0.9	-2.952	-3.169	12.05	12.95	0.9	1	0.28	30000

Caratteristiche del materiale

(Circolare 7 21-01-19 C8.5.I) Muratura in mattoni pieni e malta di calce LC2_Corti

fb_	fhk	fvk0	fhmedio	τ0	fv0	μ	ϕ	fvk,lim	E	G	FC
120000			172500	9000	20000	0.577	0.767	6500	320000000	128000000	1.2

Verifiche a pressoflessione delle travi in muratura in combinazioni non sismiche

Sezione	γM	N	M	Mu	Comb.	c.s.	Verifica
ini.	3	505	-90.49	1150.68	SLU 84	12.72	Si
fin.	3	-668	222.58	1150.68	SLU 84	5.17	Si
ini.	3	473	-74.77	1150.68	SLU 76	15.39	Si
fin.	3	-606	211.5	1150.68	SLU 76	5.44	Si
ini.	3	411	-78.47	1150.68	SLU 82	14.66	Si
fin.	3	-766	235.89	1150.68	SLU 82	4.88	Si
ini.	3	515	-100.27	1150.68	SLU 83	11.48	Si
fin.	3	-660	212.92	1150.68	SLU 83	5.4	Si
ini.	3	421	-88.25	1150.68	SLU 81	13.04	Si
fin.	3	-758	226.22	1150.68	SLU 81	5.09	Si
ini.	3	379	-62.76	1150.68	SLU 73	18.33	Si
fin.	3	-704	224.8	1150.68	SLU 73	5.12	Si
ini.	3	373	-75.68	1150.68	SLU 40	15.2	Si

Sezione	γM	N	M	Mu	Comb.	c.s.	Verifica
fin.	3	-694	212.49	1150.68	SLU 40	5.42	Si
ini.	3	513	-91.09	1150.68	SLU 74	12.63	Si
fin.	3	-606	205.22	1150.68	SLU 74	5.61	Si
ini.	3	503	-81.31	1150.68	SLU 75	14.15	Si
fin.	3	-613	214.89	1150.68	SLU 75	5.35	Si
ini.	3	329	-57.25	1150.68	SLU 61	20.1	Si
fin.	3	-663	204.9	1150.68	SLU 61	5.62	Si

Verifiche a taglio delle travi in muratura secondo §C8.7.1.3.1 in combinazioni non sismiche

Sezione	γM	N	M	V	Vt	Vp	Vt fess. diag.	Vt,lim	Comb.	c.s.	Verifica
ini.	3	598	-93.32	346			873	177	SLU 78	0.51	No
fin.	3	-515	201.59	935			1059	417	SLU 78	0.45	No
ini.	3	478	-97.47	551			873	216	SLU 41	0.39	No
fin.	3	-588	189.52	742			1085	429	SLU 41	0.58	No
ini.	3	608	-103.1	362			873	173	SLU 77	0.48	No
fin.	3	-507	191.92	920			1056	416	SLU 77	0.45	No
ini.	3	373	-75.68	563			873	245	SLU 40	0.43	No
fin.	3	-694	212.49	753			1123	444	SLU 40	0.59	No
ini.	3	505	-90.49	494			873	208	SLU 84	0.42	No
fin.	3	-668	222.58	899			1114	440	SLU 84	0.49	No
ini.	3	421	-88.25	539			873	232	SLU 81	0.43	No
fin.	3	-758	226.22	881			1146	453	SLU 81	0.51	No
ini.	3	411	-78.47	523			873	235	SLU 82	0.45	No
fin.	3	-766	235.89	896			1149	454	SLU 82	0.51	No
ini.	3	468	-87.69	534			873	219	SLU 42	0.41	No
fin.	3	-596	199.19	756			1088	430	SLU 42	0.57	No
ini.	3	515	-100.27	510			873	204	SLU 83	0.4	No
fin.	3	-660	212.92	884			1111	439	SLU 83	0.5	No
ini.	3	383	-85.46	580			873	242	SLU 39	0.42	No
fin.	3	-686	202.83	739			1121	443	SLU 39	0.6	No

Verifiche a pressoflessione delle travi in muratura in combinazioni sismiche

Sezione	γM	N	M	Mu	Comb.	c.s.	Verifica
ini.	2	1711	-334.93	1726.01	SLV 13	5.15	Si
fin.	2	-1434	392.96	1726.01	SLV 13	4.39	Si
ini.	2	-1346	320.04	1726.01	SLV 1	5.39	Si
fin.	2	1283	-254.99	1726.01	SLV 1	6.77	Si
ini.	2	-1346	320.04	1726.01	SLV 2	5.39	Si
fin.	2	1283	-254.99	1726.01	SLV 2	6.77	Si
ini.	2	1862	-411.59	1726.01	SLV 16	4.19	Si
fin.	2	-2149	522.88	1726.01	SLV 16	3.3	Si
ini.	2	1862	-411.59	1726.01	SLV 15	4.19	Si
fin.	2	-2149	522.88	1726.01	SLV 15	3.3	Si
ini.	2	967	-271.77	1726.01	SLV 11	6.35	Si
fin.	2	-2031	447.66	1726.01	SLV 11	3.86	Si
ini.	2	50	-75.28	1726.01	SLV 8	22.93	Si
fin.	2	-1216	253.28	1726.01	SLV 8	6.81	Si
ini.	2	50	-75.28	1726.01	SLV 7	22.93	Si
fin.	2	-1216	253.28	1726.01	SLV 7	6.81	Si
ini.	2	1711	-334.93	1726.01	SLV 14	5.15	Si
fin.	2	-1434	392.96	1726.01	SLV 14	4.39	Si
ini.	2	967	-271.77	1726.01	SLV 12	6.35	Si
fin.	2	-2031	447.66	1726.01	SLV 12	3.86	Si

Verifiche a taglio delle travi in muratura secondo §C8.7.1.3.1 in combinazioni sismiche

Sezione	γM	N	M	V	Vt	Vp	Vt fess. diag.	Vt,lim	Comb.	c.s.	Verifica
ini.	2	-451	180.23	-1144			1473	575	SLV 6	0.5	No
fin.	2	1165	-179.77	-817			1310	135	SLV 6	0.17	No
ini.	2	-1346	320.04	-1711			1795	709	SLV 1	0.41	No
fin.	2	1283	-254.99	-1444			1310	0	SLV 1	0	No
ini.	2	-1346	320.04	-1711			1795	709	SLV 2	0.41	No
fin.	2	1283	-254.99	-1444			1310	0	SLV 2	0	No
ini.	2	967	-271.77	1510			1310	238	SLV 11	0.16	No
fin.	2	-2031	447.66	2024			2041	797	SLV 11	0.39	No
ini.	2	967	-271.77	1510			1310	238	SLV 12	0.16	No
fin.	2	-2031	447.66	2024			2041	797	SLV 12	0.39	No
ini.	2	1862	-411.59	2077			1310	0	SLV 15	0	No
fin.	2	-2149	522.88	2651			2084	811	SLV 15	0.31	No
ini.	2	-451	180.23	-1144			1473	575	SLV 5	0.5	No
fin.	2	1165	-179.77	-817			1310	135	SLV 5	0.17	No
ini.	2	1711	-334.93	1577			1310	0	SLV 13	0	No
fin.	2	-1434	392.96	2119			1826	721	SLV 13	0.34	No
ini.	2	1711	-334.93	1577			1310	0	SLV 14	0	No
fin.	2	-1434	392.96	2119			1826	721	SLV 14	0.34	No
ini.	2	1862	-411.59	2077			1310	0	SLV 16	0	No
fin.	2	-2149	522.88	2651			2084	811	SLV 16	0.31	No

Tabella dei coefficienti di sicurezza minimi

Stato limite	Coeff.s.	Comb.	Verifica
PF_SLV	3.301	SLV 15	Si
V_SLV	0	SLV 1	No
PF_SLU	4.878	SLU 82	Si
V_SLU	0.392	SLU 41	No

Trave di accoppiamento 176

Verifiche condotte secondo D.M. 17-01-18 (N.T.C.)

Dati geometrici

X ini.	Y ini.	Z ini.inf.	Z ini.sup.	H ini.	X fin.	Y fin.	Z fin.inf.	Z fin.sup	H fin.	Luce	Spessore	R. Trazione
-1.952	-3.169	14.85	15.15	0.3	-2.952	-3.169	14.85	15.15	0.3	1	0.28	30000

Caratteristiche del materiale

(Circolare 7 21-01-19 C8.5.I) Muratura in mattoni pieni e malta di calce LC2_Corti

fb_	fhk	fvk0	fhmedio	τ0	fv0	μ	ϕ	fvk,lim	E	G	FC
120000			172500	9000	20000	0.577	0.767	6500	320000000	128000000	1.2

Verifiche a pressoflessione delle travi in muratura in combinazioni non sismiche

Sezione	γM	N	M	Mu	Comb.	c.s.	Verifica
ini.	3	-162	-86.36	127.85	SLU 75	1.48	Si
fin.	3	254	16.65	127.85	SLU 75	7.68	Si
ini.	3	-277	-79.87	127.85	SLU 40	1.6	Si
fin.	3	174	29.19	127.85	SLU 40	4.38	Si
ini.	3	-195	-81.14	127.85	SLU 34	1.58	Si
fin.	3	145	25.56	127.85	SLU 34	5	Si
ini.	3	-189	-88.27	127.85	SLU 76	1.45	Si
fin.	3	180	23.88	127.85	SLU 76	5.35	Si
ini.	3	-302	-84.27	127.85	SLU 31	1.52	Si
fin.	3	54	25.08	127.85	SLU 31	5.1	Si
ini.	3	-55	-83.23	127.85	SLU 78	1.54	Si
fin.	3	344	17.13	127.85	SLU 78	7.46	Si
ini.	3	-296	-91.4	127.85	SLU 73	1.4	Si
fin.	3	89	23.41	127.85	SLU 73	5.46	Si
ini.	3	-164	-83.87	127.85	SLU 84	1.52	Si
fin.	3	300	28	127.85	SLU 84	4.57	Si
ini.	3	-259	-80.67	127.85	SLU 52	1.58	Si
fin.	3	23	15.25	127.85	SLU 52	8.39	Si
ini.	3	-271	-87	127.85	SLU 82	1.47	Si
fin.	3	209	27.52	127.85	SLU 82	4.65	Si

Verifiche a taglio delle travi in muratura secondo §C8.7.1.3.1 in combinazioni non sismiche

Sezione	γM	N	M	V	Vt	Vp	Vt fess. diag.	Vt,lim	Comb.	c.s.	Verifica
ini.	3	32	-61.28	340			216	76	SLU 35	0.22	No
fin.	3	460	17.7	-22			216	0	SLU 35	0	No
ini.	3	-164	-83.87	448			259	102	SLU 84	0.23	No
fin.	3	300	28	38			216	0	SLU 84	0	No
ini.	3	-26	-68.13	371			222	85	SLU 38	0.23	No
fin.	3	336	25.3	44			216	0	SLU 38	0	No
ini.	3	-61	-76.1	419			232	90	SLU 36	0.21	No
fin.	3	309	18.8	2			216	0	SLU 36	0	No
ini.	3	62	-55.32	323			216	72	SLU 30	0.22	No
fin.	3	291	13.98	-2			216	0	SLU 30	0	No
ini.	3	161	-47.62	292			216	53	SLU 71	0.18	No
fin.	3	477	11.2	-52			216	0	SLU 71	0	No
ini.	3	-184	-65.05	328			265	105	SLU 39	0.32	No
fin.	3	325	28.09	41			216	0	SLU 39	0	No
ini.	3	-75	-64.41	348			236	91	SLU 32	0.26	No
fin.	3	370	17.22	-22			216	0	SLU 32	0	No
ini.	3	33	-70.43	419			216	76	SLU 70	0.18	No
fin.	3	300	5.81	-71			216	0	SLU 70	0	No
ini.	3	67	-53.3	292			216	71	SLU 37	0.24	No
fin.	3	487	24.2	20			216	0	SLU 37	0	No

Verifiche a pressoflessione delle travi in muratura in combinazioni sismiche

Sezione	γM	N	M	Mu	Comb.	c.s.	Verifica
ini.	2	5	-157.72	191.78	SLV 14	1.22	Si
fin.	2	922	61.78	191.78	SLV 14	3.1	Si
ini.	2	5	-157.72	191.78	SLV 13	1.22	Si
fin.	2	922	61.78	191.78	SLV 13	3.1	Si
ini.	2	1004	-38.94	191.78	SLV 6	4.92	Si
fin.	2	-116	-138.45	191.78	SLV 6	1.39	Si
ini.	2	-589	-140.83	191.78	SLV 16	1.36	Si
fin.	2	996	134.46	191.78	SLV 16	1.43	Si
ini.	2	-589	-140.83	191.78	SLV 15	1.36	Si
fin.	2	996	134.46	191.78	SLV 15	1.43	Si
ini.	2	-1119	-46.55	191.78	SLV 11	4.12	Si
fin.	2	568	157.09	191.78	SLV 11	1.22	Si
ini.	2	474	55.33	191.78	SLV 1	3.47	Si
fin.	2	-544	-115.82	191.78	SLV 1	1.66	Si
ini.	2	1004	-38.94	191.78	SLV 5	4.92	Si
fin.	2	-116	-138.45	191.78	SLV 5	1.39	Si
ini.	2	-1119	-46.55	191.78	SLV 12	4.12	Si
fin.	2	568	157.09	191.78	SLV 12	1.22	Si
ini.	2	474	55.33	191.78	SLV 2	3.47	Si
fin.	2	-544	-115.82	191.78	SLV 2	1.66	Si

Verifiche a taglio delle travi in muratura secondo §C8.7.1.3.1 in combinazioni sismiche

Sezione	γM	N	M	V	Vt	Vp	Vt fess. diag.	Vt,lim	Comb.	c.s.	Verifica
ini.	2	863	-102.86	742			323	0	SLV 10	0	No
fin.	2	323	-85.17	44			323	58	SLV 10	1.34	Si
ini.	2	1004	-38.94	519			323	0	SLV 6	0	No
fin.	2	-116	-138.45	-189			355	138	SLV 6	0.73	No
ini.	2	863	-102.86	742			323	0	SLV 9	0	No
fin.	2	323	-85.17	44			323	58	SLV 9	1.34	Si
ini.	2	474	55.33	-15			323	0	SLV 1	0	No
fin.	2	-544	-115.82	-432			468	184	SLV 1	0.43	No
ini.	2	1004	-38.94	519			323	0	SLV 5	0	No

Sezione	γM	N	M	V	Vt	Vp	Vt fess. diag.	Vt,lim	Comb.	c.s.	Verifica
fin.	2	-116	-138.45	-189			355	138	SLV 5	0.73	No
ini.	2	-1119	-46.55	-38			622	233	SLV 12	6.2	Si
fin.	2	568	157.09	122			323	0	SLV 12	0	No
ini.	2	5	-157.72	730			323	121	SLV 14	0.17	No
fin.	2	922	61.78	342			323	0	SLV 14	0	No
ini.	2	474	55.33	-15			323	0	SLV 2	0	No
fin.	2	-544	-115.82	-432			468	184	SLV 2	0.43	No
ini.	2	-1119	-46.55	-38			622	233	SLV 11	6.2	Si
fin.	2	568	157.09	122			323	0	SLV 11	0	No
ini.	2	5	-157.72	730			323	121	SLV 13	0.17	No
fin.	2	922	61.78	342			323	0	SLV 13	0	No

Tabella dei coefficienti di sicurezza minimi

Stato limite	Coeff.s.	Comb.	Verifica
PF_SLV	1.216	SLV 13	Si
V_SLV	0	SLV 1	No
PF_SLU	1.399	SLU 73	Si
V_SLU	0	SLU 6	No

Trave di accoppiamento 177

Verifiche condotte secondo D.M. 17-01-18 (N.T.C.)

Dati geometrici

X ini.	Y ini.	Z ini.inf.	Z ini.sup.	H ini.	X fin.	Y fin.	Z fin.inf.	Z fin.sup	H fin.	Luce	Spessore	R. Trazione
-1.958	5.948	12.05	12.95	0.9	-2.958	5.948	12.05	12.95	0.9	1	0.28	30000

Caratteristiche del materiale

(Circolare 7 21-01-19 C8.5.I) Muratura in mattoni pieni e malta di calce LC2_Corti

fb_	fhk	fvk0	fhmedio	τ0	fv0	μ	ϕ	fvk,lim	E	G	FC
120000			172500	9000	20000	0.577	0.767	6500	320000000	128000000	1.2

Verifiche a pressoflessione delle travi in muratura in combinazioni non sismiche

Sezione	γM	N	M	Mu	Comb.	c.s.	Verifica
ini.	3	5	-390.94	1150.68	SLU 80	2.94	Si
fin.	3	-634	356.69	1150.68	SLU 80	3.23	Si
ini.	3	34	-386.58	1150.68	SLU 77	2.98	Si
fin.	3	-593	348.66	1150.68	SLU 77	3.3	Si
ini.	3	46	-353.26	1150.68	SLU 35	3.26	Si
fin.	3	-527	318.68	1150.68	SLU 35	3.61	Si
ini.	3	1	-384.43	1150.68	SLU 79	2.99	Si
fin.	3	-628	349.65	1150.68	SLU 79	3.29	Si
ini.	3	38	-393.1	1150.68	SLU 78	2.93	Si
fin.	3	-600	355.71	1150.68	SLU 78	3.23	Si
ini.	3	50	-359.77	1150.68	SLU 36	3.2	Si
fin.	3	-533	325.72	1150.68	SLU 36	3.53	Si
ini.	3	-53	-366.74	1150.68	SLU 84	3.14	Si
fin.	3	-647	337.88	1150.68	SLU 84	3.41	Si
ini.	3	-57	-360.23	1150.68	SLU 83	3.19	Si
fin.	3	-641	330.84	1150.68	SLU 83	3.48	Si
ini.	3	16	-357.61	1150.68	SLU 38	3.22	Si
fin.	3	-568	326.71	1150.68	SLU 38	3.52	Si
ini.	3	-37	-352.7	1150.68	SLU 76	3.26	Si
fin.	3	-610	324.61	1150.68	SLU 76	3.54	Si

Verifiche a taglio delle travi in muratura secondo §C8.7.1.3.1 in combinazioni non sismiche

Sezione	γM	N	M	V	Vt	Vp	Vt fess. diag.	Vt,lim	Comb.	c.s.	Verifica
ini.	3	38	-393.1	1125			873	321	SLU 78	0.29	No
fin.	3	-600	355.71	942			1089	430	SLU 78	0.46	No
ini.	3	5	-390.94	1137			873	328	SLU 80	0.29	No
fin.	3	-634	356.69	929			1102	435	SLU 80	0.47	No
ini.	3	34	-386.58	1107			873	322	SLU 77	0.29	No
fin.	3	-593	348.66	924			1087	429	SLU 77	0.46	No
ini.	3	50	-359.77	1029			873	319	SLU 36	0.31	No
fin.	3	-533	325.72	863			1065	420	SLU 36	0.49	No
ini.	3	-57	-360.23	1096			894	340	SLU 83	0.31	No
fin.	3	-641	330.84	806			1104	436	SLU 83	0.54	No
ini.	3	46	-353.26	1011			873	320	SLU 35	0.32	No
fin.	3	-527	318.68	845			1063	419	SLU 35	0.5	No
ini.	3	-53	-366.74	1115			893	339	SLU 84	0.3	No
fin.	3	-647	337.88	825			1107	437	SLU 84	0.53	No
ini.	3	-37	-352.7	1057			887	336	SLU 76	0.32	No
fin.	3	-610	324.61	808			1093	432	SLU 76	0.53	No
ini.	3	1	-384.43	1119			873	329	SLU 79	0.29	No
fin.	3	-628	349.65	911			1099	435	SLU 79	0.48	No
ini.	3	16	-357.61	1042			873	325	SLU 38	0.31	No
fin.	3	-568	326.71	849			1078	426	SLU 38	0.5	No

Verifiche a pressoflessione delle travi in muratura in combinazioni sismiche

Sezione	γM	N	M	Mu	Comb.	c.s.	Verifica
ini.	2	-1158	904.73	1726.01	SLV 1	1.91	Si
fin.	2	423	-939.79	1726.01	SLV 1	1.84	Si
ini.	2	1054	-1300.69	1726.01	SLV 15	1.33	Si
fin.	2	-1167	1302.61	1726.01	SLV 15	1.33	Si
ini.	2	-890	545.9	1726.01	SLV 6	3.16	Si
fin.	2	341	-652.62	1726.01	SLV 6	2.64	Si

Sezione	γM	N	M	Mu	Comb.	c.s.	Verifica
ini.	2	786	-941.86	1726.01	SLV 12	1.83	Si
fin.	2	-1085	1015.44	1726.01	SLV 12	1.7	Si
ini.	2	1054	-1300.69	1726.01	SLV 16	1.33	Si
fin.	2	-1167	1302.61	1726.01	SLV 16	1.33	Si
ini.	2	-890	545.9	1726.01	SLV 5	3.16	Si
fin.	2	341	-652.62	1726.01	SLV 5	2.64	Si
ini.	2	720	-1028.33	1726.01	SLV 14	1.68	Si
fin.	2	-854	974.47	1726.01	SLV 14	1.77	Si
ini.	2	-1158	904.73	1726.01	SLV 2	1.91	Si
fin.	2	423	-939.79	1726.01	SLV 2	1.84	Si
ini.	2	720	-1028.33	1726.01	SLV 13	1.68	Si
fin.	2	-854	974.47	1726.01	SLV 13	1.77	Si
ini.	2	786	-941.86	1726.01	SLV 11	1.83	Si
fin.	2	-1085	1015.44	1726.01	SLV 11	1.7	Si

Verifiche a taglio delle travi in muratura secondo §C8.7.1.3.1 in combinazioni sismiche

Sezione	γM	N	M	V	Vt	Vp	Vt fess. diag.	Vt,lim	Comb.	c.s.	Verifica
ini.	2	720	-1028.33	3071			1310	323	SLV 14	0.11	No
fin.	2	-854	974.47	2843			1618	639	SLV 14	0.22	No
ini.	2	-1158	904.73	-2301			1727	683	SLV 2	0.3	No
fin.	2	423	-939.79	-2764			1310	402	SLV 2	0.15	No
ini.	2	-1158	904.73	-2301			1727	683	SLV 1	0.3	No
fin.	2	423	-939.79	-2764			1310	402	SLV 1	0.15	No
ini.	2	1054	-1300.69	3508			1310	200	SLV 15	0.06	No
fin.	2	-1167	1302.61	3644			1730	684	SLV 15	0.19	No
ini.	2	-823	632.37	-1864			1607	634	SLV 3	0.34	No
fin.	2	110	-611.65	-1964			1310	471	SLV 3	0.24	No
ini.	2	786	-941.86	2137			1310	302	SLV 11	0.14	No
fin.	2	-1085	1015.44	2614			1701	673	SLV 11	0.26	No
ini.	2	1054	-1300.69	3508			1310	200	SLV 16	0.06	No
fin.	2	-1167	1302.61	3644			1730	684	SLV 16	0.19	No
ini.	2	720	-1028.33	3071			1310	323	SLV 13	0.11	No
fin.	2	-854	974.47	2843			1618	639	SLV 13	0.22	No
ini.	2	-823	632.37	-1864			1607	634	SLV 4	0.34	No
fin.	2	110	-611.65	-1964			1310	471	SLV 4	0.24	No
ini.	2	786	-941.86	2137			1310	302	SLV 12	0.14	No
fin.	2	-1085	1015.44	2614			1701	673	SLV 12	0.26	No

Tabella dei coefficienti di sicurezza minimi

Stato limite	Coeff.s.	Comb.	Verifica
PF_SLV	1.325	SLV 15	Si
V_SLV	0.057	SLV 15	No
PF_SLU	2.927	SLU 78	Si
V_SLU	0.285	SLU 78	No

Trave di accoppiamento 178

Verifiche condotte secondo D.M. 17-01-18 (N.T.C.)

Dati geometrici

X ini.	Y ini.	Z ini.inf.	Z ini.sup.	H ini.	X fin.	Y fin.	Z fin.inf.	Z fin.sup	H fin.	Luce	Spessore	R. Trazione
-1.958	5.948	14.85	15.15	0.3	-2.958	5.948	14.85	15.15	0.3	1	0.28	30000

Caratteristiche del materiale

(Circolare 7 21-01-19 C8.5.I) Muratura in mattoni pieni e malta di calce LC2_Corti

fb_	fhk	fvk0	fhmedio	τ0	fv0	μ	ϕ	fvk,lim	E	G	FC
120000			172500	9000	20000	0.577	0.767	6500	320000000	128000000	1.2

Verifiche a pressoflessione delle travi in muratura in combinazioni non sismiche

Sezione	γM	N	M	Mu	Comb.	c.s.	Verifica
ini.	3	62	-92.22	127.85	SLU 36	1.39	Si
fin.	3	402	-1.33	127.85	SLU 36	96.29	Si
ini.	3	100	-93.25	127.85	SLU 80	1.37	Si
fin.	3	452	1.09	127.85	SLU 80	117.66	Si
ini.	3	3	-96.61	127.85	SLU 75	1.32	Si
fin.	3	360	-1.01	127.85	SLU 75	126.72	Si
ini.	3	109	-91.72	127.85	SLU 79	1.39	Si
fin.	3	450	-0.34	127.85	SLU 79	373.13	Si
ini.	3	77	-101.82	127.85	SLU 78	1.26	Si
fin.	3	439	-5.04	127.85	SLU 78	25.34	Si
ini.	3	12	-95.08	127.85	SLU 74	1.34	Si
fin.	3	358	-2.44	127.85	SLU 74	52.44	Si
ini.	3	0	-92.92	127.85	SLU 84	1.38	Si
fin.	3	383	9.45	127.85	SLU 84	13.53	Si
ini.	3	71	-90.69	127.85	SLU 35	1.41	Si
fin.	3	400	-2.76	127.85	SLU 35	46.37	Si
ini.	3	87	-100.3	127.85	SLU 77	1.27	Si
fin.	3	437	-6.47	127.85	SLU 77	19.75	Si
ini.	3	9	-91.4	127.85	SLU 83	1.4	Si
fin.	3	381	8.02	127.85	SLU 83	15.94	Si

Verifiche a taglio delle travi in muratura secondo §C8.7.1.3.1 in combinazioni non sismiche

Sezione	γM	N	M	V	Vt	Vp	Vt fess. diag.	Vt,lim	Comb.	c.s.	Verifica
ini.	3	110	-87.12	398			216	63	SLU 56	0.16	No
fin.	3	387	-12.88	-168			216	0	SLU 56	0	No
ini.	3	123	-80.06	365			216	61	SLU 59	0.17	No

Sezione	γM	N	M	V	Vt	Vp	Vt fess. diag.	Vt,lim	Comb.	c.s.	Verifica
fin.	3	402	-5.32	-134			216	0	SLU 59	0	No
ini.	3	42	-75.86	342			216	75	SLU 55	0.22	No
fin.	3	324	-0.33	-109			216	0	SLU 55	0	No
ini.	3	190	-67.13	326			216	46	SLU 50	0.14	No
fin.	3	377	-16.85	-170			216	0	SLU 50	0	No
ini.	3	26	-83.42	377			216	77	SLU 54	0.21	No
fin.	3	310	-7.42	-141			216	0	SLU 54	0	No
ini.	3	101	-88.64	402			216	65	SLU 57	0.16	No
fin.	3	389	-11.45	-163			216	0	SLU 57	0	No
ini.	3	132	-78.54	360			216	59	SLU 58	0.16	No
fin.	3	400	-6.75	-138			216	0	SLU 58	0	No
ini.	3	-15	-83.31	347			220	83	SLU 42	0.24	No
fin.	3	346	13.17	-49			216	0	SLU 42	0	No
ini.	3	35	-81.9	372			216	76	SLU 53	0.2	No
fin.	3	308	-8.85	-146			216	0	SLU 53	0	No
ini.	3	180	-68.66	331			216	48	SLU 51	0.15	No
fin.	3	379	-15.42	-166			216	0	SLU 51	0	No

Verifiche a pressoflessione delle travi in muratura in combinazioni sismiche

Sezione	γM	N	M	Mu	Comb.	c.s.	Verifica
ini.	2	-560	-214.57	191.78	SLV 14	0.89	No
fin.	2	949	116.83	191.78	SLV 14	1.64	Si
ini.	2	562	106.34	191.78	SLV 3	1.8	Si
fin.	2	-545	-117.52	191.78	SLV 3	1.63	Si
ini.	2	43	84.37	191.78	SLV 1	2.27	Si
fin.	2	-1038	-151.78	191.78	SLV 1	1.26	Si
ini.	2	43	84.37	191.78	SLV 2	2.27	Si
fin.	2	-1038	-151.78	191.78	SLV 2	1.26	Si
ini.	2	562	106.34	191.78	SLV 4	1.8	Si
fin.	2	-545	-117.52	191.78	SLV 4	1.63	Si
ini.	2	-560	-214.57	191.78	SLV 13	0.89	No
fin.	2	949	116.83	191.78	SLV 13	1.64	Si
ini.	2	-40	-192.61	191.78	SLV 16	1	No
fin.	2	1443	151.09	191.78	SLV 16	1.27	Si
ini.	2	-954	-135.56	191.78	SLV 10	1.41	Si
fin.	2	-323	-17.15	191.78	SLV 10	11.18	Si
ini.	2	-954	-135.56	191.78	SLV 9	1.41	Si
fin.	2	-323	-17.15	191.78	SLV 9	11.18	Si
ini.	2	-40	-192.61	191.78	SLV 15	1	No
fin.	2	1443	151.09	191.78	SLV 15	1.27	Si

Verifiche a taglio delle travi in muratura secondo §C8.7.1.3.1 in combinazioni sismiche

Sezione	γM	N	M	V	Vt	Vp	Vt fess. diag.	Vt,lim	Comb.	c.s.	Verifica
ini.	2	776	-62.35	690			323	0	SLV 12	0	No
fin.	2	1323	97.04	369			323	0	SLV 12	0	No
ini.	2	957	27.33	419			323	0	SLV 8	0	No
fin.	2	727	16.46	88			323	0	SLV 8	0	No
ini.	2	562	106.34	-112			323	0	SLV 3	0	No
fin.	2	-545	-117.52	-456			469	184	SLV 3	0.4	No
ini.	2	562	106.34	-112			323	0	SLV 4	0	No
fin.	2	-545	-117.52	-456			469	184	SLV 4	0.4	No
ini.	2	776	-62.35	690			323	0	SLV 11	0	No
fin.	2	1323	97.04	369			323	0	SLV 11	0	No
ini.	2	-560	-214.57	604			473	186	SLV 14	0.31	No
fin.	2	949	116.83	297			323	0	SLV 14	0	No
ini.	2	-560	-214.57	604			473	186	SLV 13	0.31	No
fin.	2	949	116.83	297			323	0	SLV 13	0	No
ini.	2	957	27.33	419			323	0	SLV 7	0	No
fin.	2	727	16.46	88			323	0	SLV 7	0	No
ini.	2	-40	-192.61	789			334	127	SLV 16	0.16	No
fin.	2	1443	151.09	482			323	0	SLV 16	0	No
ini.	2	-40	-192.61	789			334	127	SLV 15	0.16	No
fin.	2	1443	151.09	482			323	0	SLV 15	0	No

Tabella dei coefficienti di sicurezza minimi

Stato limite	Coeff.s.	Comb.	Verifica
PF_SLV	0.894	SLV 13	No
V_SLV	0	SLV 3	No
PF_SLU	1.256	SLU 78	Si
V_SLU	0	SLU 6	No

Trave di accoppiamento 179

Verifiche condotte secondo D.M. 17-01-18 (N.T.C.)

Dati geometrici

X ini.	Y ini.	Z ini.inf.	Z ini.sup.	H ini.	X fin.	Y fin.	Z fin.inf.	Z fin.sup	H fin.	Luce	Spessore	R. Trazione
-16.968	-4.413	14.02	14.661	0.641	-16.968	-3.323	14.02	15.204	1.184	1.09	0.28	30000

Caratteristiche del materiale

(Circolare 7 21-01-19 C8.5.I) Muratura in mattoni pieni e malta di calce LC2_Corti

fb_	fhk	fvk0	fhmedio	τ0	fv0	μ	ϕ	fvk,lim	E	G	FC
120000			172500	9000	20000	0.577	0.767	6500	320000000	128000000	1.2

Verifiche a pressoflessione delle travi in muratura in combinazioni non sismiche

Sezione	γM	N	M	Mu	Comb.	c.s.	Verifica

Sezione	γM	N	M	Mu	Comb.	c.s.	Verifica
ini.	3	42	-31.02	583.68	SLU 65	18.81	Si
fin.	3	-50	-6.5	1990.93	SLU 65	306.3	Si
ini.	3	14	-30.79	583.68	SLU 5	18.95	Si
fin.	3	-33	-10.33	1990.93	SLU 5	192.76	Si
ini.	3	20	-31.91	583.68	SLU 76	18.29	Si
fin.	3	-49	-7.6	1990.93	SLU 76	262.08	Si
ini.	3	4	-30.18	583.68	SLU 34	19.34	Si
fin.	3	-32	-11.87	1990.93	SLU 34	167.68	Si
ini.	3	48	-30.84	583.68	SLU 44	18.93	Si
fin.	3	-49	-5.81	1990.93	SLU 44	342.54	Si
ini.	3	38	-30.22	583.68	SLU 73	19.31	Si
fin.	3	-48	-7.36	1990.93	SLU 73	270.61	Si
ini.	3	24	-32.71	583.68	SLU 68	17.85	Si
fin.	3	-51	-6.74	1990.93	SLU 68	295.42	Si
ini.	3	7	-30.98	583.68	SLU 26	18.84	Si
fin.	3	-34	-11.02	1990.93	SLU 26	180.73	Si
ini.	3	27	-31.73	583.68	SLU 55	18.4	Si
fin.	3	-48	-6.91	1990.93	SLU 55	288.16	Si
ini.	3	30	-32.53	583.68	SLU 47	17.95	Si
fin.	3	-50	-6.05	1990.93	SLU 47	328.98	Si

Verifiche a taglio delle travi in muratura secondo §C8.7.1.3.1 in combinazioni non sismiche

Sezione	γM	N	M	V	Vt	Vp	Vt fess. diag.	Vt,lim	Comb.	c.s.	Verifica
ini.	3	28	-11.07	97			461	169	SLU 50	1.74	Si
fin.	3	-74	17.27	-428			1306	496	SLU 50	1.16	Si
ini.	3	45	-7.73	101			461	167	SLU 53	1.65	Si
fin.	3	-77	14.67	-421			1307	497	SLU 53	1.18	Si
ini.	3	64	-7.71	116			461	164	SLU 43	1.41	Si
fin.	3	-72	17.75	-420			1306	496	SLU 43	1.18	Si
ini.	3	41	-8.72	103			461	167	SLU 66	1.63	Si
fin.	3	-80	14.84	-436			1309	498	SLU 66	1.14	Si
ini.	3	48	-8.53	108			461	166	SLU 45	1.54	Si
fin.	3	-79	15.53	-441			1308	497	SLU 45	1.13	Si
ini.	3	23	-10.4	94			461	170	SLU 69	1.82	Si
fin.	3	-81	14.6	-439			1309	498	SLU 69	1.13	Si
ini.	3	20	-9.6	87			461	171	SLU 77	1.96	Si
fin.	3	-79	13.75	-419			1308	497	SLU 77	1.19	Si
ini.	3	21	-11.26	92			461	170	SLU 71	1.84	Si
fin.	3	-76	16.58	-422			1307	497	SLU 71	1.18	Si
ini.	3	30	-10.22	99			461	169	SLU 48	1.71	Si
fin.	3	-80	15.29	-445			1309	497	SLU 48	1.12	Si
ini.	3	27	-9.42	92			461	170	SLU 56	1.85	Si
fin.	3	-78	14.44	-424			1308	497	SLU 56	1.17	Si

Verifiche a pressoflessione delle travi in muratura in combinazioni sismiche

Sezione	γM	N	M	Mu	Comb.	c.s.	Verifica
ini.	2	493	-53.99	875.53	SLV 4	16.22	Si
fin.	2	-21	58.88	2986.4	SLV 4	50.72	Si
ini.	2	-149	56.33	875.53	SLV 6	15.54	Si
fin.	2	-554	110.63	2986.4	SLV 6	26.99	Si
ini.	2	-149	56.33	875.53	SLV 5	15.54	Si
fin.	2	-554	110.63	2986.4	SLV 5	26.99	Si
ini.	2	453	-84.2	875.53	SLV 8	10.4	Si
fin.	2	379	-43.22	2986.4	SLV 8	69.1	Si
ini.	2	493	-53.99	875.53	SLV 3	16.22	Si
fin.	2	-21	58.88	2986.4	SLV 3	50.72	Si
ini.	2	-364	72.6	875.53	SLV 10	12.06	Si
fin.	2	-491	69.27	2986.4	SLV 10	43.11	Si
ini.	2	238	-67.93	875.53	SLV 11	12.89	Si
fin.	2	443	-84.57	2986.4	SLV 11	35.31	Si
ini.	2	238	-67.93	875.53	SLV 12	12.89	Si
fin.	2	443	-84.57	2986.4	SLV 12	35.31	Si
ini.	2	453	-84.2	875.53	SLV 7	10.4	Si
fin.	2	379	-43.22	2986.4	SLV 7	69.1	Si
ini.	2	-364	72.6	875.53	SLV 9	12.06	Si
fin.	2	-491	69.27	2986.4	SLV 9	43.11	Si

Verifiche a taglio delle travi in muratura secondo §C8.7.1.3.1 in combinazioni sismiche

Sezione	γM	N	M	V	Vt	Vp	Vt fess. diag.	Vt,lim	Comb.	c.s.	Verifica
ini.	2	-223	0.23	-1205			751	291	SLV 15	0.24	No
fin.	2	189	-78.97	727			1915	678	SLV 15	0.93	No
ini.	2	238	-67.93	-1471			691	223	SLV 11	0.15	No
fin.	2	443	-84.57	1895			1915	617	SLV 11	0.33	No
ini.	2	-149	56.33	1640			731	281	SLV 6	0.17	No
fin.	2	-554	110.63	-2524			2136	832	SLV 6	0.33	No
ini.	2	313	-11.83	1374			691	210	SLV 2	0.15	No
fin.	2	-301	105.03	-1356			2035	783	SLV 2	0.58	No
ini.	2	-149	56.33	1640			731	281	SLV 5	0.17	No
fin.	2	-554	110.63	-2524			2136	832	SLV 5	0.33	No
ini.	2	453	-84.2	-928			691	183	SLV 7	0.2	No
fin.	2	379	-43.22	1645			1915	633	SLV 7	0.38	No
ini.	2	313	-11.83	1374			691	210	SLV 1	0.15	No
fin.	2	-301	105.03	-1356			2035	783	SLV 1	0.58	No
ini.	2	453	-84.2	-928			691	183	SLV 8	0.2	No
fin.	2	379	-43.22	1645			1915	633	SLV 8	0.38	No
ini.	2	-223	0.23	-1205			751	291	SLV 16	0.24	No
fin.	2	189	-78.97	727			1915	678	SLV 16	0.93	No
ini.	2	238	-67.93	-1471			691	223	SLV 12	0.15	No
fin.	2	443	-84.57	1895			1915	617	SLV 12	0.33	No

Tabella dei coefficienti di sicurezza minimi

Stato limite	Coeff.s.	Comb.	Verifica
PF_SLV	10.398	SLV 7	Si
V_SLV	0.152	SLV 11	No
PF_SLU	17.845	SLU 68	Si
V_SLU	1.119	SLU 48	Si

Trave di accoppiamento 180

Verifiche condotte secondo D.M. 17-01-18 (N.T.C.)

Dati geometrici

X ini.	Y ini.	Z ini.inf.	Z ini.sup.	H ini.	X fin.	Y fin.	Z fin.inf.	Z fin.sup	H fin.	Luce	Spessore	R. Trazione
-16.697	-4.696	14.02	14.52	0.5	-14.857	-4.696	14.02	14.518	0.498	1.84	0.3	30000

Caratteristiche del materiale

(Circolare 7 21-01-19 C8.5.I) Muratura in mattoni pieni e malta di calce LC2_Corti

fb_	fhk	fvk0	fhmedio	τ0	fv0	μ	ϕ	fvk,lim	E	G	FC
120000			172500	9000	20000	0.577	0.767	6500	320000000	128000000	1.2

Verifiche a pressoflessione delle travi in muratura in combinazioni non sismiche

Sezione	γM	N	M	Mu	Comb.	c.s.	Verifica
ini.	3	57	74.33	380.1	SLU 55	5.11	Si
fin.	3	-681	-109.6	377.78	SLU 55	3.45	Si
ini.	3	-19	65.23	380.1	SLU 78	5.83	Si
fin.	3	-747	-111.43	377.78	SLU 78	3.39	Si
ini.	3	-22	65.31	380.1	SLU 80	5.82	Si
fin.	3	-765	-114.3	377.78	SLU 80	3.31	Si
ini.	3	-21	62.66	380.1	SLU 72	6.07	Si
fin.	3	-746	-112.61	377.78	SLU 72	3.35	Si
ini.	3	54	75.09	380.1	SLU 68	5.06	Si
fin.	3	-714	-115.34	377.78	SLU 68	3.28	Si
ini.	3	53	77.74	380.1	SLU 76	4.89	Si
fin.	3	-733	-117.03	377.78	SLU 76	3.23	Si
ini.	3	71	74.26	380.1	SLU 73	5.12	Si
fin.	3	-646	-105.32	377.78	SLU 73	3.59	Si
ini.	3	59	71.68	380.1	SLU 47	5.3	Si
fin.	3	-662	-107.91	377.78	SLU 47	3.5	Si
ini.	3	-18	62.58	380.1	SLU 70	6.07	Si
fin.	3	-728	-109.73	377.78	SLU 70	3.44	Si
ini.	3	-18	61.9	380.1	SLU 59	6.14	Si
fin.	3	-713	-106.87	377.78	SLU 59	3.53	Si

Verifiche a taglio delle travi in muratura secondo §C8.7.1.3.1 in combinazioni non sismiche

Sezione	γM	N	M	V	Vt	Vp	Vt fess. diag.	Vt,lim	Comb.	c.s.	Verifica
ini.	3	-104	38.72	819			413	159	SLU 69	0.19	No
fin.	3	-644	-88.08	-1073			556	219	SLU 69	0.2	No
ini.	3	-106	38.81	841			413	160	SLU 71	0.19	No
fin.	3	-662	-90.96	-1106			560	220	SLU 71	0.2	No
ini.	3	-21	62.66	664			390	148	SLU 72	0.22	No
fin.	3	-746	-112.61	-1141			583	228	SLU 72	0.2	No
ini.	3	-102	35.39	798			412	159	SLU 50	0.2	No
fin.	3	-611	-83.53	-1037			547	215	SLU 50	0.21	No
ini.	3	-99	35.31	776			411	159	SLU 48	0.2	No
fin.	3	-593	-80.66	-1004			542	214	SLU 48	0.21	No
ini.	3	-108	41.46	844			414	160	SLU 79	0.19	No
fin.	3	-682	-92.65	-1112			565	222	SLU 79	0.2	No
ini.	3	-105	41.37	823			413	159	SLU 77	0.19	No
fin.	3	-663	-89.78	-1078			561	221	SLU 77	0.2	No
ini.	3	-101	37.96	780			412	159	SLU 56	0.2	No
fin.	3	-612	-82.35	-1009			547	216	SLU 56	0.21	No
ini.	3	-103	38.04	801			412	159	SLU 58	0.2	No
fin.	3	-630	-85.22	-1042			552	217	SLU 58	0.21	No
ini.	3	-22	65.31	668			391	148	SLU 80	0.22	No
fin.	3	-765	-114.3	-1146			588	230	SLU 80	0.2	No

Verifiche a pressoflessione delle travi in muratura in combinazioni sismiche

Sezione	γM	N	M	Mu	Comb.	c.s.	Verifica
ini.	2	-1070	-239.64	570.15	SLV 6	2.38	Si
fin.	2	770	235.61	566.67	SLV 6	2.41	Si
ini.	2	147	161.39	570.15	SLV 15	3.53	Si
fin.	2	-1063	-213.02	566.67	SLV 15	2.66	Si
ini.	2	-1070	-239.64	570.15	SLV 5	2.38	Si
fin.	2	770	235.61	566.67	SLV 5	2.41	Si
ini.	2	1031	250.64	570.15	SLV 7	2.27	Si
fin.	2	-1278	-286.92	566.67	SLV 7	1.98	Si
ini.	2	1031	250.64	570.15	SLV 8	2.27	Si
fin.	2	-1278	-286.92	566.67	SLV 8	1.98	Si
ini.	2	962	288.64	570.15	SLV 12	1.98	Si
fin.	2	-1510	-337.22	566.67	SLV 12	1.68	Si
ini.	2	147	161.39	570.15	SLV 16	3.53	Si
fin.	2	-1063	-213.02	566.67	SLV 16	2.66	Si
ini.	2	962	288.64	570.15	SLV 11	1.98	Si
fin.	2	-1510	-337.22	566.67	SLV 11	1.68	Si
ini.	2	-1138	-201.63	570.15	SLV 10	2.83	Si
fin.	2	538	185.31	566.67	SLV 10	3.06	Si
ini.	2	-1138	-201.63	570.15	SLV 9	2.83	Si

Sezione	γM	N	M	Mu	Comb.	c.s.	Verifica
fin.	2	538	185.31	566.67	SLV 9	3.06	Si

Verifiche a taglio delle travi in muratura secondo §C8.7.1.3.1 in combinazioni sismiche

Sezione	γM	N	M	V	Vt	Vp	Vt fess. diag.	Vt,lim	Comb.	c.s.	Verifica
ini.	2	-1138	-201.63	2768			881	345	SLV 9	0.12	No
fin.	2	538	185.31	-182			576	115	SLV 9	0.63	No
ini.	2	962	288.64	-1737			577	0	SLV 12	0	No
fin.	2	-1510	-337.22	-859			978	376	SLV 12	0.44	No
ini.	2	-483	14.31	1432			706	279	SLV 13	0.19	No
fin.	2	-449	-56.26	-393			695	274	SLV 13	0.7	No
ini.	2	1031	250.64	-1944			577	0	SLV 8	0	No
fin.	2	-1278	-286.92	-881			916	357	SLV 8	0.4	No
ini.	2	1031	250.64	-1944			577	0	SLV 7	0	No
fin.	2	-1278	-286.92	-881			916	357	SLV 7	0.4	No
ini.	2	-483	14.31	1432			706	279	SLV 14	0.19	No
fin.	2	-449	-56.26	-393			695	274	SLV 14	0.7	No
ini.	2	-1070	-239.64	2562			863	339	SLV 6	0.13	No
fin.	2	770	235.61	-204			576	0	SLV 6	0	No
ini.	2	962	288.64	-1737			577	0	SLV 11	0	No
fin.	2	-1510	-337.22	-859			978	376	SLV 11	0.44	No
ini.	2	-1138	-201.63	2768			881	345	SLV 10	0.12	No
fin.	2	538	185.31	-182			576	115	SLV 10	0.63	No
ini.	2	-1070	-239.64	2562			863	339	SLV 5	0.13	No
fin.	2	770	235.61	-204			576	0	SLV 5	0	No

Tabella dei coefficienti di sicurezza minimi

Stato limite	Coeff.s.	Comb.	Verifica
PF_SLV	1.68	SLV 11	Si
V_SLV	0	SLV 5	No
PF_SLU	3.228	SLU 76	Si
V_SLU	0.189	SLU 79	No

Trave di accoppiamento 181

Verifiche condotte secondo D.M. 17-01-18 (N.T.C.)

Dati geometrici

X ini.	Y ini.	Z ini.inf.	Z ini.sup.	H ini.	X fin.	Y fin.	Z fin.inf.	Z fin.sup	H fin.	Luce	Spessore	R. Trazione
-9.867	-4.697	14.02	14.514	0.494	-8.027	-4.697	14.02	14.513	0.493	1.84	0.3	30000

Caratteristiche del materiale

(Circolare 7 21-01-19 C8.5.I) Muratura in mattoni pieni e malta di calce LC2_Corti

fb_	fhk	fvk0	fhmedio	τ0	fv0	μ	ϕ	fvk,lim	E	G	FC
120000			172500	9000	20000	0.577	0.767	6500	320000000	128000000	1.2

Verifiche a pressoflessione delle travi in muratura in combinazioni non sismiche

Sezione	γM	N	M	Mu	Comb.	c.s.	Verifica
ini.	3	-787	-125.86	371.51	SLU 84	2.95	Si
fin.	3	-5	25.01	369.21	SLU 84	14.76	Si
ini.	3	-735	-126.86	371.51	SLU 65	2.93	Si
fin.	3	-13	29.71	369.21	SLU 65	12.43	Si
ini.	3	-814	-127.13	371.51	SLU 70	2.92	Si
fin.	3	-3	24.57	369.21	SLU 70	15.02	Si
ini.	3	-829	-129.13	371.51	SLU 72	2.88	Si
fin.	3	-3	24.22	369.21	SLU 72	15.25	Si
ini.	3	-838	-130.84	371.51	SLU 78	2.84	Si
fin.	3	-1	25.57	369.21	SLU 78	14.44	Si
ini.	3	-853	-132.84	371.51	SLU 80	2.8	Si
fin.	3	-1	25.22	369.21	SLU 80	14.64	Si
ini.	3	-811	-135.43	371.51	SLU 68	2.74	Si
fin.	3	-8	30.34	369.21	SLU 68	12.17	Si
ini.	3	-773	-129	371.51	SLU 55	2.88	Si
fin.	3	-6	30.45	369.21	SLU 55	12.13	Si
ini.	3	-759	-130.57	371.51	SLU 73	2.85	Si
fin.	3	-11	30.7	369.21	SLU 73	12.02	Si
ini.	3	-835	-139.14	371.51	SLU 76	2.67	Si
fin.	3	-6	31.34	369.21	SLU 76	11.78	Si

Verifiche a taglio delle travi in muratura secondo §C8.7.1.3.1 in combinazioni non sismiche

Sezione	γM	N	M	V	Vt	Vp	Vt fess. diag.	Vt,lim	Comb.	c.s.	Verifica
ini.	3	-704	-100.39	996			568	223	SLU 58	0.22	No
fin.	3	-1	14.19	-202			380	143	SLU 58	0.71	No
ini.	3	-680	-96.68	993			562	221	SLU 50	0.22	No
fin.	3	-3	13.19	-202			380	143	SLU 50	0.71	No
ini.	3	-814	-127.13	1049			598	233	SLU 70	0.22	No
fin.	3	-3	24.57	-262			380	143	SLU 70	0.55	No
ini.	3	-742	-106.83	1058			578	226	SLU 71	0.21	No
fin.	3	-3	14.08	-216			380	143	SLU 71	0.66	No
ini.	3	-853	-132.84	1083			608	236	SLU 80	0.22	No
fin.	3	-1	25.22	-267			380	143	SLU 80	0.54	No
ini.	3	-765	-110.54	1061			585	229	SLU 79	0.22	No
fin.	3	-1	15.08	-216			380	143	SLU 79	0.66	No
ini.	3	-750	-108.53	1030			581	227	SLU 77	0.22	No
fin.	3	-1	15.43	-211			379	143	SLU 77	0.68	No
ini.	3	-838	-130.84	1052			604	235	SLU 78	0.22	No
fin.	3	-1	25.57	-262			379	143	SLU 78	0.55	No

Sezione	γM	N	M	V	Vt	Vp	Vt fess. diag.	Vt,lim	Comb.	c.s.	Verifica
ini.	3	-727	-104.82	1027			574	225	SLU 69	0.22	No
fin.	3	-3	14.43	-211			380	143	SLU 69	0.68	No
ini.	3	-829	-129.13	1080			602	234	SLU 72	0.22	No
fin.	3	-3	24.22	-267			380	143	SLU 72	0.54	No

Verifiche a pressoflessione delle travi in muratura in combinazioni sismiche

Sezione	γM	N	M	Mu	Comb.	c.s.	Verifica
ini.	2	-1340	-317.5	557.26	SLV 11	1.76	Si
fin.	2	-96	77.89	553.81	SLV 11	7.11	Si
ini.	2	-1610	-375.03	557.26	SLV 8	1.49	Si
fin.	2	-67	116.83	553.81	SLV 8	4.74	Si
ini.	2	716	239.4	557.26	SLV 10	2.33	Si
fin.	2	48	-96.95	553.81	SLV 10	5.71	Si
ini.	2	-1340	-317.5	557.26	SLV 12	1.76	Si
fin.	2	-96	77.89	553.81	SLV 12	7.11	Si
ini.	2	-1206	-247.24	557.26	SLV 4	2.25	Si
fin.	2	16	101.08	553.81	SLV 4	5.48	Si
ini.	2	-1206	-247.24	557.26	SLV 3	2.25	Si
fin.	2	16	101.08	553.81	SLV 3	5.48	Si
ini.	2	446	181.87	557.26	SLV 6	3.06	Si
fin.	2	76	-58	553.81	SLV 6	9.55	Si
ini.	2	-1610	-375.03	557.26	SLV 7	1.49	Si
fin.	2	-67	116.83	553.81	SLV 7	4.74	Si
ini.	2	446	181.87	557.26	SLV 5	3.06	Si
fin.	2	76	-58	553.81	SLV 5	9.55	Si
ini.	2	716	239.4	557.26	SLV 9	2.33	Si
fin.	2	48	-96.95	553.81	SLV 9	5.71	Si

Verifiche a taglio delle travi in muratura secondo §C8.7.1.3.1 in combinazioni sismiche

Sezione	γM	N	M	V	Vt	Vp	Vt fess. diag.	Vt,lim	Comb.	c.s.	Verifica
ini.	2	-1610	-375.03	689			1000	383	SLV 7	0.56	No
fin.	2	-67	116.83	-700			587	224	SLV 7	0.32	No
ini.	2	-304	-55.47	683			652	255	SLV 15	0.37	No
fin.	2	-78	-28.74	-61			590	225	SLV 15	3.67	Si
ini.	2	-1610	-375.03	689			1000	383	SLV 8	0.56	No
fin.	2	-67	116.83	-700			587	224	SLV 8	0.32	No
ini.	2	312	111.6	556			571	163	SLV 13	0.29	No
fin.	2	-35	-81.19	267			578	219	SLV 13	0.82	No
ini.	2	312	111.6	556			571	163	SLV 14	0.29	No
fin.	2	-35	-81.19	267			578	219	SLV 14	0.82	No
ini.	2	-1340	-317.5	755			928	360	SLV 11	0.48	No
fin.	2	-96	77.89	-582			595	228	SLV 11	0.39	No
ini.	2	716	239.4	330			571	39	SLV 10	0.12	No
fin.	2	48	-96.95	512			569	207	SLV 10	0.4	No
ini.	2	-1340	-317.5	755			928	360	SLV 12	0.48	No
fin.	2	-96	77.89	-582			595	228	SLV 12	0.39	No
ini.	2	716	239.4	330			571	39	SLV 9	0.12	No
fin.	2	48	-96.95	512			569	207	SLV 9	0.4	No
ini.	2	-304	-55.47	683			652	255	SLV 16	0.37	No
fin.	2	-78	-28.74	-61			590	225	SLV 16	3.67	Si

Tabella dei coefficienti di sicurezza minimi

Stato limite	Coeff.s.	Comb.	Verifica
PF_SLV	1.486	SLV 7	Si
V_SLV	0.119	SLV 9	No
PF_SLU	2.67	SLU 76	Si
V_SLU	0.214	SLU 71	No

Trave di accoppiamento 182

Verifiche condotte secondo D.M. 17-01-18 (N.T.C.)

Dati geometrici

X ini.	Y ini.	Z ini.inf.	Z ini.sup.	H ini.	X fin.	Y fin.	Z fin.inf.	Z fin.sup	H fin.	Luce	Spessore	R. Trazione
-7.763	-4.399	14.02	14.661	0.641	-7.763	-3.309	14.02	15.203	1.183	1.09	0.28	30000

Caratteristiche del materiale

(Circolare 7 21-01-19 C8.5.I) Muratura in mattoni pieni e malta di calce LC2_Corti

fb_	fhk	fvk0	fhmedio	τ0	fv0	μ	ϕ	fvk,lim	E	G	FC
120000			172500	9000	20000	0.577	0.767	6500	320000000	128000000	1.2

Verifiche a pressoflessione delle travi in muratura in combinazioni non sismiche

Sezione	γM	N	M	Mu	Comb.	c.s.	Verifica
ini.	3	105	-47.06	582.97	SLU 65	12.39	Si
fin.	3	-43	-4.7	1989.58	SLU 65	423.14	Si
ini.	3	76	-46.23	582.97	SLU 13	12.61	Si
fin.	3	-26	-8.64	1989.58	SLU 13	230.21	Si
ini.	3	90	-50.52	582.97	SLU 76	11.54	Si
fin.	3	-42	-5.23	1989.58	SLU 76	380.78	Si
ini.	3	89	-50.22	582.97	SLU 68	11.61	Si
fin.	3	-44	-4.25	1989.58	SLU 68	467.83	Si
ini.	3	92	-48.81	582.97	SLU 55	11.94	Si
fin.	3	-41	-4.68	1989.58	SLU 55	425.46	Si
ini.	3	73	-47.64	582.97	SLU 26	12.24	Si
fin.	3	-29	-8.22	1989.58	SLU 26	242.07	Si
ini.	3	75	-45.93	582.97	SLU 5	12.69	Si

Sezione	γM	N	M	Mu	Comb.	c.s.	Verifica
fin.	3	-28	-7.67	1989.58	SLU 5	259.39	Si
ini.	3	74	-47.94	582.97	SLU 34	12.16	Si
fin.	3	-27	-9.19	1989.58	SLU 34	216.47	Si
ini.	3	92	-48.51	582.97	SLU 47	12.02	Si
fin.	3	-43	-3.7	1989.58	SLU 47	537.13	Si
ini.	3	106	-47.36	582.97	SLU 73	12.31	Si
fin.	3	-41	-5.67	1989.58	SLU 73	350.64	Si

Verifiche a taglio delle travi in muratura secondo §C8.7.1.3.1 in combinazioni non sismiche

Sezione	γM	N	M	V	Vt	Vp	Vt fess. diag.	Vt,lim	Comb.	c.s.	Verifica
ini.	3	90	-50.52	-154			461	160	SLU 76	1.04	Si
fin.	3	-42	-5.23	-33			1293	489	SLU 76	14.67	Si
ini.	3	75	-45.93	-144			461	162	SLU 5	1.12	Si
fin.	3	-28	-7.67	36			1287	486	SLU 5	13.62	Si
ini.	3	92	-43.07	-143			461	159	SLU 10	1.11	Si
fin.	3	-24	-9.09	70			1286	485	SLU 10	6.96	Si
ini.	3	34	-20.16	10			461	168	SLU 69	16.73	Si
fin.	3	-78	14.73	-447			1307	497	SLU 69	1.11	Si
ini.	3	36	-18.45	21			461	168	SLU 48	8.06	Si
fin.	3	-77	15.28	-452			1307	497	SLU 48	1.1	Si
ini.	3	76	-46.23	-157			461	162	SLU 13	1.03	Si
fin.	3	-26	-8.64	59			1286	486	SLU 13	8.2	Si
ini.	3	73	-47.64	-155			461	162	SLU 26	1.05	Si
fin.	3	-29	-8.22	40			1288	487	SLU 26	12.14	Si
ini.	3	92	-48.81	-143			461	159	SLU 55	1.11	Si
fin.	3	-41	-4.68	-38			1293	489	SLU 55	12.96	Si
ini.	3	90	-44.78	-154			461	160	SLU 31	1.04	Si
fin.	3	-25	-9.64	74			1286	486	SLU 31	6.55	Si
ini.	3	74	-47.94	-168			461	162	SLU 34	0.97	No
fin.	3	-27	-9.19	64			1287	486	SLU 34	7.64	Si

Verifiche a pressoflessione delle travi in muratura in combinazioni sismiche

Sezione	γM	N	M	Mu	Comb.	c.s.	Verifica
ini.	2	-820	201	874.45	SLV 6	4.35	Si
fin.	2	-490	90.04	2984.37	SLV 6	33.14	Si
ini.	2	788	-226.79	874.45	SLV 7	3.86	Si
fin.	2	398	-93.93	2984.37	SLV 7	31.77	Si
ini.	2	-820	201	874.45	SLV 5	4.35	Si
fin.	2	-490	90.04	2984.37	SLV 5	33.14	Si
ini.	2	788	-226.79	874.45	SLV 8	3.86	Si
fin.	2	398	-93.93	2984.37	SLV 8	31.77	Si
ini.	2	70	-81.18	874.45	SLV 4	10.77	Si
fin.	2	101	-62.45	2984.37	SLV 4	47.79	Si
ini.	2	921	-223.26	874.45	SLV 11	3.92	Si
fin.	2	386	-65.72	2984.37	SLV 11	45.41	Si
ini.	2	-687	204.53	874.45	SLV 9	4.28	Si
fin.	2	-502	118.25	2984.37	SLV 9	25.24	Si
ini.	2	921	-223.26	874.45	SLV 12	3.92	Si
fin.	2	386	-65.72	2984.37	SLV 12	45.41	Si
ini.	2	70	-81.18	874.45	SLV 3	10.77	Si
fin.	2	101	-62.45	2984.37	SLV 3	47.79	Si
ini.	2	-687	204.53	874.45	SLV 10	4.28	Si
fin.	2	-502	118.25	2984.37	SLV 10	25.24	Si

Verifiche a taglio delle travi in muratura secondo §C8.7.1.3.1 in combinazioni sismiche

Sezione	γM	N	M	V	Vt	Vp	Vt fess. diag.	Vt,lim	Comb.	c.s.	Verifica
ini.	2	-687	204.53	1860			874	345	SLV 10	0.19	No
fin.	2	-502	118.25	-2430			2115	822	SLV 10	0.34	No
ini.	2	-820	201	1518			909	360	SLV 5	0.24	No
fin.	2	-490	90.04	-2354			2110	820	SLV 5	0.35	No
ini.	2	788	-226.79	-1805			691	91	SLV 8	0.05	No
fin.	2	398	-93.93	1810			1914	628	SLV 8	0.35	No
ini.	2	921	-223.26	-1464			691	0	SLV 11	0	No
fin.	2	386	-65.72	1733			1914	631	SLV 11	0.36	No
ini.	2	-687	204.53	1860			874	345	SLV 9	0.19	No
fin.	2	-502	118.25	-2430			2115	822	SLV 9	0.34	No
ini.	2	30	58.92	1095			691	255	SLV 14	0.23	No
fin.	2	-205	86.76	-1062			1996	764	SLV 14	0.72	No
ini.	2	-820	201	1518			909	360	SLV 6	0.24	No
fin.	2	-490	90.04	-2354			2110	820	SLV 6	0.35	No
ini.	2	921	-223.26	-1464			691	0	SLV 12	0	No
fin.	2	386	-65.72	1733			1914	631	SLV 12	0.36	No
ini.	2	788	-226.79	-1805			691	91	SLV 7	0.05	No
fin.	2	398	-93.93	1810			1914	628	SLV 7	0.35	No
ini.	2	30	58.92	1095			691	255	SLV 13	0.23	No
fin.	2	-205	86.76	-1062			1996	764	SLV 13	0.72	No

Tabella dei coefficienti di sicurezza minimi

Stato limite	Coeff.s.	Comb.	Verifica
PF_SLV	3.856	SLV 7	Si
V_SLV	0	SLV 11	No
PF_SLU	11.539	SLU 76	Si
V_SLU	0.967	SLU 34	No

Trave di accoppiamento 183

Verifiche condotte secondo D.M. 17-01-18 (N.T.C.)

Dati geometrici

X ini.	Y ini.	Z ini.inf.	Z ini.sup.	H ini.	X fin.	Y fin.	Z fin.inf.	Z fin.sup	H fin.	Luce	Spessore	R. Trazione
-13.062	-4.696	3.08	3.33	0.25	-11.662	-4.697	3.08	3.33	0.25	1.4	0.3	30000

Caratteristiche del materiale

(Circolare 7 21-01-19 C8.5.I) Muratura in mattoni pieni e malta di calce LC2_Corti

fb_	fhk	fvk0	fhmedio	τ0	fv0	μ	ϕ	fvk,lim	E	G	FC
120000			172500	9000	20000	0.577	0.767	6500	320000000	128000000	1.2

Verifiche a pressoflessione delle travi in muratura in combinazioni non sismiche

Sezione	γM	N	M	Mu	Comb.	c.s.	Verifica
ini.	3	-701	-207.24	95.13	SLU 74	0.46	No
fin.	3	-627	-203.56	95.13	SLU 74	0.47	No
ini.	3	-728	-213.9	95.13	SLU 83	0.44	No
fin.	3	-658	-210.93	95.13	SLU 83	0.45	No
ini.	3	-691	-206.66	95.13	SLU 77	0.46	No
fin.	3	-646	-206.97	95.13	SLU 77	0.46	No
ini.	3	-731	-213.74	95.13	SLU 84	0.45	No
fin.	3	-652	-209.07	95.13	SLU 84	0.46	No
ini.	3	-705	-207.09	95.13	SLU 75	0.46	No
fin.	3	-620	-201.69	95.13	SLU 75	0.47	No
ini.	3	-712	-206.72	95.13	SLU 73	0.46	No
fin.	3	-596	-196.69	95.13	SLU 73	0.48	No
ini.	3	-695	-206.51	95.13	SLU 78	0.46	No
fin.	3	-639	-205.11	95.13	SLU 78	0.46	No
ini.	3	-741	-214.32	95.13	SLU 82	0.44	No
fin.	3	-632	-205.65	95.13	SLU 82	0.46	No
ini.	3	-688	-205.81	95.13	SLU 79	0.46	No
fin.	3	-646	-206.62	95.13	SLU 79	0.46	No
ini.	3	-737	-214.48	95.13	SLU 81	0.44	No
fin.	3	-639	-207.52	95.13	SLU 81	0.46	No

Verifiche a taglio delle travi in muratura secondo §C8.7.1.3.1 in combinazioni non sismiche

Sezione	γM	N	M	V	Vt	Vp	Vt fess. diag.	Vt,lim	Comb.	c.s.	Verifica
ini.	3	-691	-205.66	855			377	141	SLU 80	0.16	No
fin.	3	-639	-204.76	-853			363	137	SLU 80	0.16	No
ini.	3	-731	-213.74	886			388	144	SLU 84	0.16	No
fin.	3	-652	-209.07	-871			366	138	SLU 84	0.16	No
ini.	3	-691	-206.66	860			377	141	SLU 77	0.16	No
fin.	3	-646	-206.97	-862			365	137	SLU 77	0.16	No
ini.	3	-728	-213.9	887			387	143	SLU 83	0.16	No
fin.	3	-658	-210.93	-878			368	138	SLU 83	0.16	No
ini.	3	-695	-206.51	858			378	141	SLU 78	0.16	No
fin.	3	-639	-205.11	-854			363	137	SLU 78	0.16	No
ini.	3	-741	-214.32	887			390	144	SLU 82	0.16	No
fin.	3	-632	-205.65	-858			361	136	SLU 82	0.16	No
ini.	3	-705	-207.09	859			380	142	SLU 75	0.16	No
fin.	3	-620	-201.69	-842			358	135	SLU 75	0.16	No
ini.	3	-737	-214.48	889			389	144	SLU 81	0.16	No
fin.	3	-639	-207.52	-866			363	137	SLU 81	0.16	No
ini.	3	-688	-205.81	856			376	140	SLU 79	0.16	No
fin.	3	-646	-206.62	-861			365	137	SLU 79	0.16	No
ini.	3	-701	-207.24	861			379	141	SLU 74	0.16	No
fin.	3	-627	-203.56	-849			360	136	SLU 74	0.16	No

Verifiche a pressoflessione delle travi in muratura in combinazioni sismiche

Sezione	γM	N	M	Mu	Comb.	c.s.	Verifica
ini.	2	-4847	-813.1	142.69	SLV 2	0.18	No
fin.	2	3806	395.28	142.69	SLV 2	0.36	No
ini.	2	3498	429.8	142.69	SLV 13	0.33	No
fin.	2	-4821	-742.75	142.69	SLV 13	0.19	No
ini.	2	-4494	-726.45	142.69	SLV 4	0.2	No
fin.	2	3986	458.65	142.69	SLV 4	0.31	No
ini.	2	3852	516.44	142.69	SLV 16	0.28	No
fin.	2	-4640	-679.38	142.69	SLV 16	0.21	No
ini.	2	-2339	-479.17	142.69	SLV 6	0.3	No
fin.	2	576	-76.97	142.69	SLV 6	1.85	Si
ini.	2	-4494	-726.45	142.69	SLV 3	0.2	No
fin.	2	3986	458.65	142.69	SLV 3	0.31	No
ini.	2	-4847	-813.1	142.69	SLV 1	0.18	No
fin.	2	3806	395.28	142.69	SLV 1	0.36	No
ini.	2	-2339	-479.17	142.69	SLV 5	0.3	No
fin.	2	576	-76.97	142.69	SLV 5	1.85	Si
ini.	2	3852	516.44	142.69	SLV 15	0.28	No
fin.	2	-4640	-679.38	142.69	SLV 15	0.21	No
ini.	2	3498	429.8	142.69	SLV 14	0.33	No
fin.	2	-4821	-742.75	142.69	SLV 14	0.19	No

Verifiche a taglio delle travi in muratura secondo §C8.7.1.3.1 in combinazioni sismiche

Sezione	γM	N	M	V	Vt	Vp	Vt fess. diag.	Vt,lim	Comb.	c.s.	Verifica
ini.	2	1343	182.52	-535			289	0	SLV 12	0	No
fin.	2	-1411	-207.13	-836			665	237	SLV 12	0.28	No
ini.	2	-2339	-479.17	1771			912	292	SLV 5	0.17	No
fin.	2	576	-76.97	-358			289	0	SLV 5	0	No
ini.	2	-4847	-813.1	2971			1581	406	SLV 2	0.14	No
fin.	2	3806	395.28	1288			289	0	SLV 2	0	No
ini.	2	-2339	-479.17	1771			912	292	SLV 6	0.17	No
fin.	2	576	-76.97	-358			289	0	SLV 6	0	No
ini.	2	-4494	-726.45	2676			1487	392	SLV 3	0.15	No

Sezione	γM	N	M	V	Vt	Vp	Vt fess. diag.	Vt,lim	Comb.	c.s.	Verifica
fin.	2	3986	458.65	1503			289	0	SLV 3	0	No
ini.	2	-4494	-726.45	2676			1487	392	SLV 4	0.15	No
fin.	2	3986	458.65	1503			289	0	SLV 4	0	No
ini.	2	-1161	-190.35	788			598	220	SLV 7	0.28	No
fin.	2	1177	134.28	360			289	0	SLV 7	0	No
ini.	2	1343	182.52	-535			289	0	SLV 11	0	No
fin.	2	-1411	-207.13	-836			665	237	SLV 11	0.28	No
ini.	2	-4847	-813.1	2971			1581	406	SLV 1	0.14	No
fin.	2	3806	395.28	1288			289	0	SLV 1	0	No
ini.	2	-1161	-190.35	788			598	220	SLV 8	0.28	No
fin.	2	1177	134.28	360			289	0	SLV 8	0	No

Tabella dei coefficienti di sicurezza minimi

Stato limite	Coeff.s.	Comb.	Verifica
PF_SLV	0.175	SLV 1	No
V_SLV	0	SLV 1	No
PF_SLU	0.444	SLU 81	No
V_SLU	0.157	SLU 83	No

Trave di accoppiamento 184

Verifiche condotte secondo D.M. 17-01-18 (N.T.C.)

Dati geometrici

X ini.	Y ini.	Z ini.inf.	Z ini.sup.	H ini.	X fin.	Y fin.	Z fin.inf.	Z fin.sup	H fin.	Luce	Spessore	R. Trazione
-12.933	-4.696	3.33	4.28	0.95	-11.933	-4.696	3.33	4.28	0.95	1	0.3	30000

Caratteristiche del materiale

(Circolare 7 21-01-19 C8.5.I) Muratura in mattoni pieni e malta di calce LC2_Corti

fb_	fhk	fvk0	fhmedio	τ0	fv0	μ	ϕ	fvk,lim	E	G	FC
120000			172500	9000	20000	0.577	0.767	6500	320000000	128000000	1.2

Verifiche a pressoflessione delle travi in muratura in combinazioni non sismiche

Sezione	γM	N	M	Mu	Comb.	c.s.	Verifica
ini.	3	-1601	47.32	1373.66	SLU 83	29.03	Si
fin.	3	-1671	284.13	1373.66	SLU 83	4.83	Si
ini.	3	-1508	40.15	1373.66	SLU 75	34.21	Si
fin.	3	-1592	279.84	1373.66	SLU 75	4.91	Si
ini.	3	-1551	30.99	1373.66	SLU 82	44.33	Si
fin.	3	-1659	292.04	1373.66	SLU 82	4.7	Si
ini.	3	-1326	17.22	1373.66	SLU 52	79.78	Si
fin.	3	-1458	278.73	1373.66	SLU 52	4.93	Si
ini.	3	-1463	26.38	1373.66	SLU 73	52.06	Si
fin.	3	-1580	285.64	1373.66	SLU 73	4.81	Si
ini.	3	-1534	45.04	1373.66	SLU 74	30.5	Si
fin.	3	-1608	279.06	1373.66	SLU 74	4.92	Si
ini.	3	-1441	26.71	1373.66	SLU 60	51.42	Si
fin.	3	-1554	284.35	1373.66	SLU 60	4.83	Si
ini.	3	-1414	21.82	1373.66	SLU 61	62.94	Si
fin.	3	-1538	285.13	1373.66	SLU 61	4.82	Si
ini.	3	-1577	35.88	1373.66	SLU 81	38.28	Si
fin.	3	-1675	291.27	1373.66	SLU 81	4.72	Si
ini.	3	-1575	42.43	1373.66	SLU 84	32.37	Si
fin.	3	-1655	284.91	1373.66	SLU 84	4.82	Si

Verifiche a taglio delle travi in muratura secondo §C8.7.1.3.1 in combinazioni non sismiche

Sezione	γM	N	M	V	Vt	Vp	Vt fess. diag.	Vt,lim	Comb.	c.s.	Verifica
ini.	3	-1162	14.08	226			1484	585	SLU 44	2.59	Si
fin.	3	-1297	262.58	555			1535	603	SLU 44	1.09	Si
ini.	3	-1326	17.22	249			1547	607	SLU 52	2.44	Si
fin.	3	-1458	278.73	553			1597	625	SLU 52	1.13	Si
ini.	3	-1207	27.84	185			1501	591	SLU 46	3.2	Si
fin.	3	-1309	256.78	536			1540	605	SLU 46	1.13	Si
ini.	3	-1343	31.4	177			1553	610	SLU 64	3.44	Si
fin.	3	-1444	268.21	565			1592	623	SLU 64	1.1	Si
ini.	3	-1463	26.38	222			1599	625	SLU 73	2.81	Si
fin.	3	-1580	285.64	570			1643	640	SLU 73	1.12	Si
ini.	3	-1206	22.23	204			1501	591	SLU 43	2.9	Si
fin.	3	-1323	261.29	549			1546	607	SLU 43	1.11	Si
ini.	3	-1323	34.69	165			1545	607	SLU 68	3.68	Si
fin.	3	-1413	262.36	548			1580	619	SLU 68	1.13	Si
ini.	3	-1299	23.25	200			1536	604	SLU 65	3.03	Si
fin.	3	-1418	269.5	572			1582	620	SLU 65	1.08	Si
ini.	3	-1343	37.01	158			1553	610	SLU 67	3.86	Si
fin.	3	-1430	263.69	552			1586	621	SLU 67	1.12	Si
ini.	3	-1186	25.52	192			1493	588	SLU 47	3.07	Si
fin.	3	-1292	255.45	532			1534	603	SLU 47	1.13	Si

Verifiche a pressoflessione delle travi in muratura in combinazioni sismiche

Sezione	γM	N	M	Mu	Comb.	c.s.	Verifica
ini.	2	2959	-3192.13	2060.49	SLV 3	0.65	No
fin.	2	-5494	2840.87	2060.49	SLV 3	0.73	No
ini.	2	-4458	3218.68	2060.49	SLV 15	0.64	No
fin.	2	4013	-2606.98	2060.49	SLV 15	0.79	No
ini.	2	-5059	3238.2	2060.49	SLV 14	0.64	No
fin.	2	3233	-2422.06	2060.49	SLV 14	0.85	No

Sezione	γM	N	M	Mu	Comb.	c.s.	Verifica
ini.	2	-939	-906.05	2060.49	SLV 6	2.27	Si
fin.	2	-3857	1334.78	2060.49	SLV 6	1.54	Si
ini.	2	2358	-3172.61	2060.49	SLV 1	0.65	No
fin.	2	-6274	3025.79	2060.49	SLV 1	0.68	No
ini.	2	-5059	3238.2	2060.49	SLV 13	0.64	No
fin.	2	3233	-2422.06	2060.49	SLV 13	0.85	No
ini.	2	2959	-3192.13	2060.49	SLV 4	0.65	No
fin.	2	-5494	2840.87	2060.49	SLV 4	0.73	No
ini.	2	-939	-906.05	2060.49	SLV 5	2.27	Si
fin.	2	-3857	1334.78	2060.49	SLV 5	1.54	Si
ini.	2	-4458	3218.68	2060.49	SLV 16	0.64	No
fin.	2	4013	-2606.98	2060.49	SLV 16	0.79	No
ini.	2	2358	-3172.61	2060.49	SLV 2	0.65	No
fin.	2	-6274	3025.79	2060.49	SLV 2	0.68	No

Verifiche a taglio delle travi in muratura secondo §C8.7.1.3.1 in combinazioni sismiche

Sezione	γM	N	M	V	Vt	Vp	Vt fess. diag.	Vt,lim	Comb.	c.s.	Verifica
ini.	2	2959	-3192.13	9429			1564	0	SLV 4	0	No
fin.	2	-5494	2840.87	9457			3652	1297	SLV 4	0.14	No
ini.	2	2959	-3192.13	9429			1564	0	SLV 3	0	No
fin.	2	-5494	2840.87	9457			3652	1297	SLV 3	0.14	No
ini.	2	-5059	3238.2	-9132			3486	1255	SLV 13	0.14	No
fin.	2	3233	-2422.06	-8597			1564	0	SLV 13	0	No
ini.	2	2358	-3172.61	9445			1564	0	SLV 1	0	No
fin.	2	-6274	3025.79	10010			3948	1368	SLV 1	0.14	No
ini.	2	-4458	3218.68	-9148			3258	1196	SLV 15	0.13	No
fin.	2	4013	-2606.98	-9150			1564	0	SLV 15	0	No
ini.	2	2358	-3172.61	9445			1564	0	SLV 2	0	No
fin.	2	-6274	3025.79	10010			3948	1368	SLV 2	0.14	No
ini.	2	-4458	3218.68	-9148			3258	1196	SLV 16	0.13	No
fin.	2	4013	-2606.98	-9150			1564	0	SLV 16	0	No
ini.	2	-1160	952.12	-2665			2005	793	SLV 11	0.3	No
fin.	2	1596	-915.97	-3282			1564	0	SLV 11	0	No
ini.	2	-5059	3238.2	-9132			3486	1255	SLV 14	0.14	No
fin.	2	3233	-2422.06	-8597			1564	0	SLV 14	0	No
ini.	2	-1160	952.12	-2665			2005	793	SLV 12	0.3	No
fin.	2	1596	-915.97	-3282			1564	0	SLV 12	0	No

Tabella dei coefficienti di sicurezza minimi

Stato limite	Coeff.s.	Comb.	Verifica
PF_SLV	0.636	SLV 13	No
V_SLV	0	SLV 1	No
PF_SLU	4.704	SLU 82	Si
V_SLU	1.084	SLU 65	Si

Trave di accoppiamento 185

Verifiche condotte secondo D.M. 17-01-18 (N.T.C.)

Dati geometrici

X ini.	Y ini.	Z ini.inf.	Z ini.sup.	H ini.	X fin.	Y fin.	Z fin.inf.	Z fin.sup	H fin.	Luce	Spessore	R. Trazione
-12.933	-4.696	6.28	6.76	0.48	-11.933	-4.696	6.28	6.76	0.48	1	0.3	30000

Caratteristiche del materiale

(Circolare 7 21-01-19 C8.5.I) Muratura in mattoni pieni e malta di calce LC2_Corti

fb_	fhk	fvk0	fhmedio	τ0	fv0	μ	ϕ	fvk,lim	E	G	FC
120000			172500	9000	20000	0.577	0.767	6500	320000000	128000000	1.2

Verifiche a pressoflessione delle travi in muratura in combinazioni non sismiche

Sezione	γM	N	M	Mu	Comb.	c.s.	Verifica
ini.	3	198	-114.04	350.68	SLU 79	3.08	Si
fin.	3	-60	-190.7	350.68	SLU 79	1.84	Si
ini.	3	166	-121.12	350.68	SLU 84	2.9	Si
fin.	3	-63	-189.65	350.68	SLU 84	1.85	Si
ini.	3	190	-119.74	350.68	SLU 83	2.93	Si
fin.	3	-47	-190.43	350.68	SLU 83	1.84	Si
ini.	3	155	-119.08	350.68	SLU 75	2.95	Si
fin.	3	-59	-183.02	350.68	SLU 75	1.92	Si
ini.	3	178	-117.7	350.68	SLU 74	2.98	Si
fin.	3	-43	-183.8	350.68	SLU 74	1.91	Si
ini.	3	196	-114.88	350.68	SLU 77	3.05	Si
fin.	3	-59	-190.82	350.68	SLU 77	1.84	Si
ini.	3	174	-115.41	350.68	SLU 80	3.04	Si
fin.	3	-76	-189.92	350.68	SLU 80	1.85	Si
ini.	3	172	-116.26	350.68	SLU 78	3.02	Si
fin.	3	-75	-190.04	350.68	SLU 78	1.85	Si
ini.	3	148	-123.94	350.68	SLU 82	2.83	Si
fin.	3	-47	-182.63	350.68	SLU 82	1.92	Si
ini.	3	172	-122.56	350.68	SLU 81	2.86	Si
fin.	3	-31	-183.41	350.68	SLU 81	1.91	Si

Verifiche a taglio delle travi in muratura secondo §C8.7.1.3.1 in combinazioni non sismiche

Sezione	γM	N	M	V	Vt	Vp	Vt fess. diag.	Vt,lim	Comb.	c.s.	Verifica
ini.	3	174	-115.41	965			370	111	SLU 80	0.12	No
fin.	3	-76	-189.92	-1250			390	150	SLU 80	0.12	No
ini.	3	196	-114.88	966			370	107	SLU 77	0.11	No

Sezione	γM	N	M	V	Vt	Vp	Vt fess. diag.	Vt,lim	Comb.	c.s.	Verifica
fin.	3	-59	-190.82	-1256			385	147	SLU 77	0.12	No
ini.	3	166	-121.12	998			370	113	SLU 84	0.11	No
fin.	3	-63	-189.65	-1259			387	148	SLU 84	0.12	No
ini.	3	172	-122.56	1000			370	111	SLU 81	0.11	No
fin.	3	-31	-183.41	-1230			378	144	SLU 81	0.12	No
ini.	3	178	-117.7	971			370	110	SLU 74	0.11	No
fin.	3	-43	-183.8	-1222			381	145	SLU 74	0.12	No
ini.	3	155	-119.08	975			370	115	SLU 75	0.12	No
fin.	3	-59	-183.02	-1217			385	147	SLU 75	0.12	No
ini.	3	172	-116.26	970			370	111	SLU 78	0.11	No
fin.	3	-75	-190.04	-1251			390	150	SLU 78	0.12	No
ini.	3	190	-119.74	995			370	108	SLU 83	0.11	No
fin.	3	-47	-190.43	-1264			382	146	SLU 83	0.12	No
ini.	3	198	-114.04	962			370	107	SLU 79	0.11	No
fin.	3	-60	-190.7	-1255			386	148	SLU 79	0.12	No
ini.	3	148	-123.94	1003			370	116	SLU 82	0.12	No
fin.	3	-47	-182.63	-1225			382	146	SLU 82	0.12	No

Verifiche a pressoflessione delle travi in muratura in combinazioni sismiche

Sezione	γM	N	M	Mu	Comb.	c.s.	Verifica
ini.	2	-3982	-1310.6	526.02	SLV 2	0.4	No
fin.	2	3917	1000.92	526.02	SLV 2	0.53	No
ini.	2	1076	88.56	526.02	SLV 9	5.94	Si
fin.	2	-1537	-660.4	526.02	SLV 9	0.8	No
ini.	2	-3840	-1206.15	526.02	SLV 3	0.44	No
fin.	2	4105	1109.49	526.02	SLV 3	0.47	No
ini.	2	4195	1133.88	526.02	SLV 15	0.46	No
fin.	2	-3947	-1251.51	526.02	SLV 15	0.42	No
ini.	2	4195	1133.88	526.02	SLV 16	0.46	No
fin.	2	-3947	-1251.51	526.02	SLV 16	0.42	No
ini.	2	4054	1029.43	526.02	SLV 14	0.51	No
fin.	2	-4136	-1360.08	526.02	SLV 14	0.39	No
ini.	2	-3840	-1206.15	526.02	SLV 4	0.44	No
fin.	2	4105	1109.49	526.02	SLV 4	0.47	No
ini.	2	4054	1029.43	526.02	SLV 13	0.51	No
fin.	2	-4136	-1360.08	526.02	SLV 13	0.39	No
ini.	2	1076	88.56	526.02	SLV 10	5.94	Si
fin.	2	-1537	-660.4	526.02	SLV 10	0.8	No
ini.	2	-3982	-1310.6	526.02	SLV 1	0.4	No
fin.	2	3917	1000.92	526.02	SLV 1	0.53	No

Verifiche a taglio delle travi in muratura secondo §C8.7.1.3.1 in combinazioni sismiche

Sezione	γM	N	M	V	Vt	Vp	Vt fess. diag.	Vt,lim	Comb.	c.s.	Verifica
ini.	2	-3982	-1310.6	5549			1616	533	SLV 2	0.1	No
fin.	2	3917	1000.92	3753			555	0	SLV 2	0	No
ini.	2	1076	88.56	-127			555	0	SLV 10	0	No
fin.	2	-1537	-660.4	-2586			964	370	SLV 10	0.14	No
ini.	2	-3982	-1310.6	5549			1616	533	SLV 1	0.1	No
fin.	2	3917	1000.92	3753			555	0	SLV 1	0	No
ini.	2	-1335	-613.45	2676			910	353	SLV 5	0.13	No
fin.	2	878	47.9	233			555	0	SLV 5	0	No
ini.	2	1076	88.56	-127			555	0	SLV 9	0	No
fin.	2	-1537	-660.4	-2586			964	370	SLV 9	0.14	No
ini.	2	-862	-265.28	1543			785	309	SLV 7	0.2	No
fin.	2	1507	409.81	892			555	0	SLV 7	0	No
ini.	2	-1335	-613.45	2676			910	353	SLV 6	0.13	No
fin.	2	878	47.9	233			555	0	SLV 6	0	No
ini.	2	-3840	-1206.15	5209			1579	525	SLV 3	0.1	No
fin.	2	4105	1109.49	3951			555	0	SLV 3	0	No
ini.	2	-862	-265.28	1543			785	309	SLV 8	0.2	No
fin.	2	1507	409.81	892			555	0	SLV 8	0	No
ini.	2	-3840	-1206.15	5209			1579	525	SLV 4	0.1	No
fin.	2	4105	1109.49	3951			555	0	SLV 4	0	No

Tabella dei coefficienti di sicurezza minimi

Stato limite	Coeff.s.	Comb.	Verifica
PF_SLV	0.387	SLV 13	No
V_SLV	0	SLV 1	No
PF_SLU	1.838	SLU 77	Si
V_SLU	0.109	SLU 83	No

Trave di accoppiamento 186

Verifiche condotte secondo D.M. 17-01-18 (N.T.C.)

Dati geometrici

X ini.	Y ini.	Z ini.inf.	Z ini.sup.	H ini.	X fin.	Y fin.	Z fin.inf.	Z fin.sup	H fin.	Luce	Spessore	R. Trazione
-12.933	-4.696	6.76	7.71	0.95	-11.933	-4.696	6.76	7.71	0.95	1	0.3	30000

Caratteristiche del materiale

(Circolare 7 21-01-19 C8.5.I) Muratura in mattoni pieni e malta di calce LC2_Corti

fb_	fhk	fvk0	fhmedio	τ0	fv0	μ	ϕ	fvk,lim	E	G	FC
120000			172500	9000	20000	0.577	0.767	6500	320000000	128000000	1.2

Verifiche a pressoflessione delle travi in muratura in combinazioni non sismiche

Sezione	γM	N	M	Mu	Comb.	c.s.	Verifica

Sezione	γM	N	M	Mu	Comb.	c.s.	Verifica
ini.	3	-513	70.13	1373.66	SLU 77	19.59	Si
fin.	3	-258	-71.36	1373.66	SLU 77	19.25	Si
ini.	3	-551	69.76	1373.66	SLU 78	19.69	Si
fin.	3	-303	-65.81	1373.66	SLU 78	20.87	Si
ini.	3	-516	64.48	1373.66	SLU 83	21.3	Si
fin.	3	-279	-65.32	1373.66	SLU 83	21.03	Si
ini.	3	-443	68.02	1373.66	SLU 35	20.19	Si
fin.	3	-205	-66.35	1373.66	SLU 35	20.7	Si
ini.	3	-515	70.94	1373.66	SLU 79	19.36	Si
fin.	3	-257	-71.98	1373.66	SLU 79	19.08	Si
ini.	3	-553	70.57	1373.66	SLU 80	19.47	Si
fin.	3	-303	-66.43	1373.66	SLU 80	20.68	Si
ini.	3	-482	68.46	1373.66	SLU 38	20.07	Si
fin.	3	-249	-61.42	1373.66	SLU 38	22.36	Si
ini.	3	-444	68.83	1373.66	SLU 37	19.96	Si
fin.	3	-204	-66.97	1373.66	SLU 37	20.51	Si
ini.	3	-554	64.11	1373.66	SLU 84	21.43	Si
fin.	3	-325	-59.77	1373.66	SLU 84	22.98	Si
ini.	3	-481	67.65	1373.66	SLU 36	20.3	Si
fin.	3	-250	-60.8	1373.66	SLU 36	22.59	Si

Verifiche a taglio delle travi in muratura secondo §C8.7.1.3.1 in combinazioni non sismiche

Sezione	γM	N	M	V	Vt	Vp	Vt fess. diag.	Vt,lim	Comb.	c.s.	Verifica
ini.	3	-496	59.44	-650			1231	484	SLU 70	0.74	No
fin.	3	-279	-57.76	199			1149	446	SLU 70	2.24	Si
ini.	3	-513	70.13	-716			1238	487	SLU 77	0.68	No
fin.	3	-258	-71.36	182			1141	442	SLU 77	2.43	Si
ini.	3	-491	59.25	-666			1229	483	SLU 74	0.73	No
fin.	3	-270	-61.24	203			1145	445	SLU 74	2.19	Si
ini.	3	-458	59.81	-660			1217	478	SLU 69	0.72	No
fin.	3	-234	-63.31	191			1132	438	SLU 69	2.3	Si
ini.	3	-460	60.61	-659			1217	478	SLU 71	0.73	No
fin.	3	-233	-63.93	185			1131	438	SLU 71	2.36	Si
ini.	3	-551	69.76	-706			1252	493	SLU 78	0.7	No
fin.	3	-303	-65.81	191			1158	451	SLU 78	2.36	Si
ini.	3	-516	64.48	-689			1239	487	SLU 83	0.71	No
fin.	3	-279	-65.32	194			1149	446	SLU 83	2.3	Si
ini.	3	-515	70.94	-715			1238	487	SLU 79	0.68	No
fin.	3	-257	-71.98	177			1140	442	SLU 79	2.5	Si
ini.	3	-554	64.11	-679			1253	494	SLU 84	0.73	No
fin.	3	-325	-59.77	203			1166	455	SLU 84	2.24	Si
ini.	3	-553	70.57	-705			1253	493	SLU 80	0.7	No
fin.	3	-303	-66.43	185			1158	451	SLU 80	2.43	Si

Verifiche a pressoflessione delle travi in muratura in combinazioni sismiche

Sezione	γM	N	M	Mu	Comb.	c.s.	Verifica
ini.	2	3791	-2413.8	2060.49	SLV 3	0.85	No
fin.	2	-4071	2347.21	2060.49	SLV 3	0.88	No
ini.	2	3439	-2376.54	2060.49	SLV 2	0.87	No
fin.	2	-4252	2441.48	2060.49	SLV 2	0.84	No
ini.	2	-919	695.17	2060.49	SLV 11	2.96	Si
fin.	2	1289	-919.18	2060.49	SLV 11	2.24	Si
ini.	2	3439	-2376.54	2060.49	SLV 1	0.87	No
fin.	2	-4252	2441.48	2060.49	SLV 1	0.84	No
ini.	2	-4086	2436.1	2060.49	SLV 15	0.85	No
fin.	2	3849	-2508.8	2060.49	SLV 15	0.82	No
ini.	2	-4438	2473.36	2060.49	SLV 14	0.83	No
fin.	2	3668	-2414.53	2060.49	SLV 14	0.85	No
ini.	2	-4438	2473.36	2060.49	SLV 13	0.83	No
fin.	2	3668	-2414.53	2060.49	SLV 13	0.85	No
ini.	2	-4086	2436.1	2060.49	SLV 16	0.85	No
fin.	2	3849	-2508.8	2060.49	SLV 16	0.82	No
ini.	2	3791	-2413.8	2060.49	SLV 4	0.85	No
fin.	2	-4071	2347.21	2060.49	SLV 4	0.88	No
ini.	2	-919	695.17	2060.49	SLV 12	2.96	Si
fin.	2	1289	-919.18	2060.49	SLV 12	2.24	Si

Verifiche a taglio delle travi in muratura secondo §C8.7.1.3.1 in combinazioni sismiche

Sezione	γM	N	M	V	Vt	Vp	Vt fess. diag.	Vt,lim	Comb.	c.s.	Verifica
ini.	2	3791	-2413.8	7843			1564	0	SLV 4	0	No
fin.	2	-4071	2347.21	8163			3111	1156	SLV 4	0.14	No
ini.	2	1444	-759.8	2238			1564	0	SLV 7	0	No
fin.	2	-1088	537.63	1936			1977	782	SLV 7	0.4	No
ini.	2	3439	-2376.54	7721			1564	0	SLV 1	0	No
fin.	2	-4252	2441.48	8581			3180	1175	SLV 1	0.14	No
ini.	2	1444	-759.8	2238			1564	0	SLV 8	0	No
fin.	2	-1088	537.63	1936			1977	782	SLV 8	0.4	No
ini.	2	-4086	2436.1	-8578			3117	1157	SLV 16	0.13	No
fin.	2	3849	-2508.8	-8235			1564	0	SLV 16	0	No
ini.	2	-4438	2473.36	-8700			3250	1194	SLV 14	0.14	No
fin.	2	3668	-2414.53	-7816			1564	0	SLV 14	0	No
ini.	2	3439	-2376.54	7721			1564	0	SLV 2	0	No
fin.	2	-4252	2441.48	8581			3180	1175	SLV 2	0.14	No
ini.	2	-4086	2436.1	-8578			3117	1157	SLV 15	0.13	No
fin.	2	3849	-2508.8	-8235			1564	0	SLV 15	0	No
ini.	2	-4438	2473.36	-8700			3250	1194	SLV 13	0.14	No
fin.	2	3668	-2414.53	-7816			1564	0	SLV 13	0	No
ini.	2	3791	-2413.8	7843			1564	0	SLV 3	0	No
fin.	2	-4071	2347.21	8163			3111	1156	SLV 3	0.14	No

Tabella dei coefficienti di sicurezza minimi

Stato limite	Coeff.s.	Comb.	Verifica
PF_SLV	0.821	SLV 15	No
V_SLV	0	SLV 1	No
PF_SLU	19.084	SLU 79	Si
V_SLU	0.68	SLU 77	No

Trave di accoppiamento 187

Verifiche condotte secondo D.M. 17-01-18 (N.T.C.)

Dati geometrici

X ini.	Y ini.	Z ini.inf.	Z ini.sup.	H ini.	X fin.	Y fin.	Z fin.inf.	Z fin.sup	H fin.	Luce	Spessore	R. Trazione
-12.933	-4.696	9.71	10.24	0.53	-11.933	-4.696	9.71	10.24	0.53	1	0.3	30000

Caratteristiche del materiale

(Circolare 7 21-01-19 C8.5.I) Muratura in mattoni pieni e malta di calce LC2_Corti

fb_	fhk	fvk0	fhmedio	τ0	fv0	μ	ϕ	fvk,lim	E	G	FC
120000			172500	9000	20000	0.577	0.767	6500	320000000	128000000	1.2

Verifiche a pressoflessione delle travi in muratura in combinazioni non sismiche

Sezione	γM	N	M	Mu	Comb.	c.s.	Verifica
ini.	3	234	-58.86	427.55	SLU 56	7.26	Si
fin.	3	44	-125.34	427.55	SLU 56	3.41	Si
ini.	3	271	-56.35	427.55	SLU 77	7.59	Si
fin.	3	42	-135.48	427.55	SLU 77	3.16	Si
ini.	3	221	-61.24	427.55	SLU 75	6.98	Si
fin.	3	38	-125.85	427.55	SLU 75	3.4	Si
ini.	3	271	-57.12	427.55	SLU 74	7.48	Si
fin.	3	70	-127.07	427.55	SLU 74	3.36	Si
ini.	3	266	-56.22	427.55	SLU 79	7.61	Si
fin.	3	37	-135.58	427.55	SLU 79	3.15	Si
ini.	3	230	-58.73	427.55	SLU 58	7.28	Si
fin.	3	39	-125.44	427.55	SLU 58	3.41	Si
ini.	3	221	-60.48	427.55	SLU 78	7.07	Si
fin.	3	10	-134.26	427.55	SLU 78	3.18	Si
ini.	3	285	-56.65	427.55	SLU 83	7.55	Si
fin.	3	68	-131.61	427.55	SLU 83	3.25	Si
ini.	3	235	-60.77	427.55	SLU 84	7.04	Si
fin.	3	36	-130.39	427.55	SLU 84	3.28	Si
ini.	3	216	-60.34	427.55	SLU 80	7.09	Si
fin.	3	5	-134.36	427.55	SLU 80	3.18	Si

Verifiche a taglio delle travi in muratura secondo §C8.7.1.3.1 in combinazioni non sismiche

Sezione	γM	N	M	V	Vt	Vp	Vt fess. diag.	Vt,lim	Comb.	c.s.	Verifica
ini.	3	285	-57.42	706			408	104	SLU 81	0.15	No
fin.	3	96	-123.2	-952			408	139	SLU 81	0.15	No
ini.	3	285	-56.65	718			408	105	SLU 83	0.15	No
fin.	3	68	-131.61	-999			408	143	SLU 83	0.14	No
ini.	3	235	-61.54	726			408	115	SLU 82	0.16	No
fin.	3	64	-121.98	-951			408	144	SLU 82	0.15	No
ini.	3	216	-60.34	737			408	118	SLU 80	0.16	No
fin.	3	5	-134.36	-1014			408	153	SLU 80	0.15	No
ini.	3	271	-56.35	718			408	107	SLU 77	0.15	No
fin.	3	42	-135.48	-1015			408	147	SLU 77	0.15	No
ini.	3	221	-61.24	726			408	117	SLU 75	0.16	No
fin.	3	38	-125.85	-966			408	148	SLU 75	0.15	No
ini.	3	271	-57.12	706			408	107	SLU 74	0.15	No
fin.	3	70	-127.07	-968			408	143	SLU 74	0.15	No
ini.	3	235	-60.77	738			408	115	SLU 84	0.16	No
fin.	3	36	-130.39	-998			408	148	SLU 84	0.15	No
ini.	3	266	-56.22	717			408	108	SLU 79	0.15	No
fin.	3	37	-135.58	-1015			408	148	SLU 79	0.15	No
ini.	3	221	-60.48	738			408	117	SLU 78	0.16	No
fin.	3	10	-134.26	-1013			408	152	SLU 78	0.15	No

Verifiche a pressoflessione delle travi in muratura in combinazioni sismiche

Sezione	γM	N	M	Mu	Comb.	c.s.	Verifica
ini.	2	2396	784.75	641.32	SLV 15	0.82	No
fin.	2	-2730	-953.27	641.32	SLV 15	0.67	No
ini.	2	2396	784.75	641.32	SLV 16	0.82	No
fin.	2	-2730	-953.27	641.32	SLV 16	0.67	No
ini.	2	2866	841.47	641.32	SLV 13	0.76	No
fin.	2	-2342	-935.07	641.32	SLV 13	0.69	No
ini.	2	2866	841.47	641.32	SLV 14	0.76	No
fin.	2	-2342	-935.07	641.32	SLV 14	0.69	No
ini.	2	-1342	-397.42	641.32	SLV 7	1.61	Si
fin.	2	202	143.55	641.32	SLV 7	4.47	Si
ini.	2	-2511	-932.17	641.32	SLV 3	0.69	No
fin.	2	2479	766.81	641.32	SLV 3	0.84	No
ini.	2	-2041	-875.45	641.32	SLV 1	0.73	No
fin.	2	2867	785.01	641.32	SLV 1	0.82	No
ini.	2	-2041	-875.45	641.32	SLV 2	0.73	No
fin.	2	2867	785.01	641.32	SLV 2	0.82	No
ini.	2	-2511	-932.17	641.32	SLV 4	0.69	No
fin.	2	2479	766.81	641.32	SLV 4	0.84	No
ini.	2	-1342	-397.42	641.32	SLV 8	1.61	Si

Sezione	γM	N	M	Mu	Comb.	c.s.	Verifica
fin.	2	202	143.55	641.32	SLV 8	4.47	Si

Verifiche a taglio delle travi in muratura secondo §C8.7.1.3.1 in combinazioni sismiche

Sezione	γM	N	M	V	Vt	Vp	Vt fess. diag.	Vt,lim	Comb.	c.s.	Verifica
ini.	2	1698	306.71	-131			612	0	SLV 9	0	No
fin.	2	-66	-311.81	-1835			630	240	SLV 9	0.13	No
ini.	2	2866	841.47	-2704			612	0	SLV 14	0	No
fin.	2	-2342	-935.07	-4026			1237	458	SLV 14	0.11	No
ini.	2	-2511	-932.17	3734			1282	470	SLV 3	0.13	No
fin.	2	2479	766.81	2708			612	0	SLV 3	0	No
ini.	2	2866	841.47	-2704			612	0	SLV 13	0	No
fin.	2	-2342	-935.07	-4026			1237	458	SLV 13	0.11	No
ini.	2	1698	306.71	-131			612	0	SLV 10	0	No
fin.	2	-66	-311.81	-1835			630	240	SLV 10	0.13	No
ini.	2	-2511	-932.17	3734			1282	470	SLV 4	0.13	No
fin.	2	2479	766.81	2708			612	0	SLV 4	0	No
ini.	2	225	-208.36	1864			612	195	SLV 6	0.1	No
fin.	2	1497	204.21	152			612	0	SLV 6	0	No
ini.	2	-2041	-875.45	3945			1157	435	SLV 2	0.11	No
fin.	2	2867	785.01	2599			612	0	SLV 2	0	No
ini.	2	-2041	-875.45	3945			1157	435	SLV 1	0.11	No
fin.	2	2867	785.01	2599			612	0	SLV 1	0	No
ini.	2	225	-208.36	1864			612	195	SLV 5	0.1	No
fin.	2	1497	204.21	152			612	0	SLV 5	0	No

Tabella dei coefficienti di sicurezza minimi

Stato limite	Coeff.s.	Comb.	Verifica
PF_SLV	0.673	SLV 15	No
V_SLV	0	SLV 1	No
PF_SLU	3.153	SLU 79	Si
V_SLU	0.144	SLU 83	No

Trave di accoppiamento 188

Verifiche condotte secondo D.M. 17-01-18 (N.T.C.)

Dati geometrici

X ini.	Y ini.	Z ini.inf.	Z ini.sup.	H ini.	X fin.	Y fin.	Z fin.inf.	Z fin.sup	H fin.	Luce	Spessore	R. Trazione
-12.933	-4.696	10.24	11.19	0.95	-11.933	-4.696	10.24	11.19	0.95	1	0.3	30000

Caratteristiche del materiale

(Circolare 7 21-01-19 C8.5.I) Muratura in mattoni pieni e malta di calce LC2_Corti

fb_	fhk	fvk0	fhmedio	τ0	fv0	μ	ϕ	fvk,lim	E	G	FC
120000			172500	9000	20000	0.577	0.767	6500	320000000	128000000	1.2

Verifiche a pressoflessione delle travi in muratura in combinazioni non sismiche

Sezione	γM	N	M	Mu	Comb.	c.s.	Verifica
ini.	3	-955	162.65	1373.66	SLU 79	8.45	Si
fin.	3	-726	8.24	1373.66	SLU 79	166.72	Si
ini.	3	-1073	167.38	1373.66	SLU 80	8.21	Si
fin.	3	-863	27.21	1373.66	SLU 80	50.48	Si
ini.	3	-995	154.58	1373.66	SLU 84	8.89	Si
fin.	3	-797	21.04	1373.66	SLU 84	65.29	Si
ini.	3	-952	151.66	1373.66	SLU 38	9.06	Si
fin.	3	-755	22.3	1373.66	SLU 38	61.6	Si
ini.	3	-1055	165.51	1373.66	SLU 78	8.3	Si
fin.	3	-845	25.1	1373.66	SLU 78	54.72	Si
ini.	3	-937	160.78	1373.66	SLU 77	8.54	Si
fin.	3	-709	6.13	1373.66	SLU 77	224.17	Si
ini.	3	-876	149.84	1373.66	SLU 83	9.17	Si
fin.	3	-660	2.06	1373.66	SLU 83	665.67	Si
ini.	3	-1050	151.34	1373.66	SLU 76	9.08	Si
fin.	3	-878	36.84	1373.66	SLU 76	37.29	Si
ini.	3	-998	150.6	1373.66	SLU 70	9.12	Si
fin.	3	-822	32.46	1373.66	SLU 70	42.32	Si
ini.	3	-1016	152.47	1373.66	SLU 72	9.01	Si
fin.	3	-839	34.57	1373.66	SLU 72	39.73	Si

Verifiche a taglio delle travi in muratura secondo §C8.7.1.3.1 in combinazioni non sismiche

Sezione	γM	N	M	V	Vt	Vp	Vt fess. diag.	Vt,lim	Comb.	c.s.	Verifica
ini.	3	-879	145.87	-354			1377	544	SLU 69	1.54	Si
fin.	3	-685	13.48	-3			1303	515	SLU 69	154.19	Si
ini.	3	-1055	165.51	-371			1444	570	SLU 78	1.54	Si
fin.	3	-845	25.1	-17			1364	539	SLU 78	31.41	Si
ini.	3	-815	145.05	-359			1353	535	SLU 35	1.49	Si
fin.	3	-601	1.21	-57			1271	501	SLU 35	8.86	Si
ini.	3	-897	147.74	-354			1384	547	SLU 71	1.55	Si
fin.	3	-703	15.6	-3			1310	518	SLU 71	150.52	Si
ini.	3	-937	160.78	-384			1399	553	SLU 77	1.44	Si
fin.	3	-709	6.13	-49			1312	518	SLU 77	10.68	Si
ini.	3	-1073	167.38	-371			1451	573	SLU 80	1.54	Si
fin.	3	-863	27.21	-17			1370	542	SLU 80	31.38	Si
ini.	3	-758	130.15	-330			1331	526	SLU 27	1.6	Si
fin.	3	-577	8.57	-11			1262	498	SLU 27	43.73	Si
ini.	3	-934	149.79	-347			1398	553	SLU 36	1.59	Si
fin.	3	-737	20.19	-25			1323	523	SLU 36	20.74	Si

Sezione	γM	N	M	V	Vt	Vp	Vt fess. diag.	Vt,lim	Comb.	c.s.	Verifica
ini.	3	-955	162.65	-383			1405	556	SLU 79	1.45	Si
fin.	3	-726	8.24	-49			1319	521	SLU 79	10.71	Si
ini.	3	-833	146.92	-359			1359	538	SLU 37	1.5	Si
fin.	3	-618	3.33	-57			1278	504	SLU 37	8.89	Si

Verifiche a pressoflessione delle travi in muratura in combinazioni sismiche

Sezione	γM	N	M	Mu	Comb.	c.s.	Verifica
ini.	2	-2419	1363.23	2060.49	SLV 13	1.51	Si
fin.	2	2586	-1430.11	2060.49	SLV 13	1.44	Si
ini.	2	-1503	-165.39	2060.49	SLV 7	12.46	Si
fin.	2	-3083	668.26	2060.49	SLV 7	3.08	Si
ini.	2	2371	-1283.4	2060.49	SLV 1	1.61	Si
fin.	2	-2270	1290.81	2060.49	SLV 1	1.6	Si
ini.	2	-3433	1451.7	2060.49	SLV 15	1.42	Si
fin.	2	1426	-1277.91	2060.49	SLV 15	1.61	Si
ini.	2	1357	-1194.93	2060.49	SLV 3	1.72	Si
fin.	2	-3430	1443.01	2060.49	SLV 3	1.43	Si
ini.	2	2371	-1283.4	2060.49	SLV 2	1.61	Si
fin.	2	-2270	1290.81	2060.49	SLV 2	1.6	Si
ini.	2	-2419	1363.23	2060.49	SLV 14	1.51	Si
fin.	2	2586	-1430.11	2060.49	SLV 14	1.44	Si
ini.	2	1357	-1194.93	2060.49	SLV 4	1.72	Si
fin.	2	-3430	1443.01	2060.49	SLV 4	1.43	Si
ini.	2	-1503	-165.39	2060.49	SLV 8	12.46	Si
fin.	2	-3083	668.26	2060.49	SLV 8	3.08	Si
ini.	2	-3433	1451.7	2060.49	SLV 16	1.42	Si
fin.	2	1426	-1277.91	2060.49	SLV 16	1.61	Si

Verifiche a taglio delle travi in muratura secondo §C8.7.1.3.1 in combinazioni sismiche

Sezione	γM	N	M	V	Vt	Vp	Vt fess. diag.	Vt,lim	Comb.	c.s.	Verifica
ini.	2	1877	-460.3	958			1564	0	SLV 6	0	No
fin.	2	783	160.91	1955			1564	395	SLV 6	0.2	No
ini.	2	440	333.69	-1893			1564	489	SLV 9	0.26	No
fin.	2	2239	-655.36	-869			1564	0	SLV 9	0	No
ini.	2	2371	-1283.4	4487			1564	0	SLV 2	0	No
fin.	2	-2270	1290.81	4860			2427	948	SLV 2	0.2	No
ini.	2	440	333.69	-1893			1564	489	SLV 10	0.26	No
fin.	2	2239	-655.36	-869			1564	0	SLV 10	0	No
ini.	2	-3433	1451.7	-4845			2869	1087	SLV 16	0.22	No
fin.	2	1426	-1277.91	-4887			1564	0	SLV 16	0	No
ini.	2	-2419	1363.23	-5018			2483	967	SLV 13	0.19	No
fin.	2	2586	-1430.11	-4553			1564	0	SLV 13	0	No
ini.	2	-2419	1363.23	-5018			2483	967	SLV 14	0.19	No
fin.	2	2586	-1430.11	-4553			1564	0	SLV 14	0	No
ini.	2	2371	-1283.4	4487			1564	0	SLV 1	0	No
fin.	2	-2270	1290.81	4860			2427	948	SLV 1	0.2	No
ini.	2	1877	-460.3	958			1564	0	SLV 5	0	No
fin.	2	783	160.91	1955			1564	395	SLV 5	0.2	No
ini.	2	-3433	1451.7	-4845			2869	1087	SLV 15	0.22	No
fin.	2	1426	-1277.91	-4887			1564	0	SLV 15	0	No

Tabella dei coefficienti di sicurezza minimi

Stato limite	Coeff.s.	Comb.	Verifica
PF_SLV	1.419	SLV 15	Si
V_SLV	0	SLV 1	No
PF_SLU	8.207	SLU 80	Si
V_SLU	1.442	SLU 77	Si

Trave di accoppiamento 189

Verifiche condotte secondo D.M. 17-01-18 (N.T.C.)

Dati geometrici

X ini.	Y ini.	Z ini.inf.	Z ini.sup.	H ini.	X fin.	Y fin.	Z fin.inf.	Z fin.sup	H fin.	Luce	Spessore	R. Trazione
-12.933	-4.696	13.19	14.517	1.327	-11.933	-4.696	13.19	14.516	1.326	1	0.3	30000

Caratteristiche del materiale

(Circolare 7 21-01-19 C8.5.I) Muratura in mattoni pieni e malta di calce LC2_Corti

fb_	fhk	fvk0	fhmedio	τ0	fv0	μ	ϕ	fvk,lim	E	G	FC
120000			172500	9000	20000	0.577	0.767	6500	320000000	128000000	1.2

Verifiche a pressoflessione delle travi in muratura in combinazioni non sismiche

Sezione	γM	N	M	Mu	Comb.	c.s.	Verifica
ini.	3	-373	-303.3	2678.61	SLU 72	8.83	Si
fin.	3	-543	-474.75	2675.26	SLU 72	5.64	Si
ini.	3	-314	-263.37	2678.61	SLU 78	10.17	Si
fin.	3	-504	-466.63	2675.26	SLU 78	5.73	Si
ini.	3	-225	-263.98	2678.61	SLU 76	10.15	Si
fin.	3	-393	-440.25	2675.26	SLU 76	6.08	Si
ini.	3	-332	-268.47	2678.61	SLU 57	9.98	Si
fin.	3	-495	-437.1	2675.26	SLU 57	6.12	Si
ini.	3	-330	-276.55	2678.61	SLU 80	9.69	Si
fin.	3	-520	-478	2675.26	SLU 80	5.6	Si
ini.	3	-357	-290.12	2678.61	SLU 70	9.23	Si
fin.	3	-527	-463.38	2675.26	SLU 70	5.77	Si
ini.	3	-268	-290.72	2678.61	SLU 68	9.21	Si

Sezione	γM	N	M	Mu	Comb.	c.s.	Verifica
fin.	3	-416	-437	2675.26	SLU 68	6.12	Si
ini.	3	-348	-281.65	2678.61	SLU 59	9.51	Si
fin.	3	-511	-448.47	2675.26	SLU 59	5.97	Si
ini.	3	-375	-295.21	2678.61	SLU 49	9.07	Si
fin.	3	-518	-433.85	2675.26	SLU 49	6.17	Si
ini.	3	-391	-308.39	2678.61	SLU 51	8.69	Si
fin.	3	-534	-445.22	2675.26	SLU 51	6.01	Si

Verifiche a taglio delle travi in muratura secondo §C8.7.1.3.1 in combinazioni non sismiche

Sezione	γM	N	M	V	Vt	Vp	Vt fess. diag.	Vt,lim	Comb.	c.s.	Verifica
ini.	3	-370	-221.49	713			1681	652	SLU 58	0.91	No
fin.	3	-540	-399.27	-1369			1748	684	SLU 58	0.5	No
ini.	3	-243	-152.26	608			1630	627	SLU 83	1.03	Si
fin.	3	-431	-359.64	-1322			1704	664	SLU 83	0.5	No
ini.	3	-335	-203.22	679			1667	646	SLU 77	0.95	No
fin.	3	-533	-417.43	-1446			1745	682	SLU 77	0.47	No
ini.	3	-357	-290.12	735			1675	650	SLU 70	0.88	No
fin.	3	-527	-463.38	-1385			1742	681	SLU 70	0.49	No
ini.	3	-395	-243.14	740			1691	657	SLU 71	0.89	No
fin.	3	-571	-425.55	-1422			1760	690	SLU 71	0.48	No
ini.	3	-314	-263.37	693			1658	641	SLU 78	0.93	No
fin.	3	-504	-466.63	-1428			1733	677	SLU 78	0.47	No
ini.	3	-330	-276.55	711			1665	645	SLU 80	0.91	No
fin.	3	-520	-478	-1448			1740	680	SLU 80	0.47	No
ini.	3	-378	-229.97	722			1684	654	SLU 69	0.91	No
fin.	3	-555	-414.18	-1402			1754	687	SLU 69	0.49	No
ini.	3	-373	-303.3	754			1682	653	SLU 72	0.87	No
fin.	3	-543	-474.75	-1405			1749	684	SLU 72	0.49	No
ini.	3	-352	-216.4	698			1673	649	SLU 79	0.93	No
fin.	3	-549	-428.8	-1466			1751	685	SLU 79	0.47	No

Verifiche a pressoflessione delle travi in muratura in combinazioni sismiche

Sezione	γM	N	M	Mu	Comb.	c.s.	Verifica
ini.	2	79	-1394.5	4017.92	SLV 7	2.88	Si
fin.	2	690	-843.59	4012.88	SLV 7	4.76	Si
ini.	2	-393	1195.55	4017.92	SLV 9	3.36	Si
fin.	2	-1219	417.1	4012.88	SLV 9	9.62	Si
ini.	2	-530	-1270.99	4017.92	SLV 4	3.16	Si
fin.	2	621	254.63	4012.88	SLV 4	15.76	Si
ini.	2	-393	1195.55	4017.92	SLV 10	3.36	Si
fin.	2	-1219	417.1	4012.88	SLV 10	9.62	Si
ini.	2	445	449.9	4017.92	SLV 16	8.93	Si
fin.	2	-696	-1189.28	4012.88	SLV 16	3.37	Si
ini.	2	372	-878.24	4017.92	SLV 12	4.57	Si
fin.	2	294	-1276.76	4012.88	SLV 12	3.14	Si
ini.	2	-530	-1270.99	4017.92	SLV 3	3.16	Si
fin.	2	621	254.63	4012.88	SLV 3	15.76	Si
ini.	2	445	449.9	4017.92	SLV 15	8.93	Si
fin.	2	-696	-1189.28	4012.88	SLV 15	3.37	Si
ini.	2	372	-878.24	4017.92	SLV 11	4.57	Si
fin.	2	294	-1276.76	4012.88	SLV 11	3.14	Si
ini.	2	79	-1394.5	4017.92	SLV 8	2.88	Si
fin.	2	690	-843.59	4012.88	SLV 8	4.76	Si

Verifiche a taglio delle travi in muratura secondo §C8.7.1.3.1 in combinazioni sismiche

Sezione	γM	N	M	V	Vt	Vp	Vt fess. diag.	Vt,lim	Comb.	c.s.	Verifica
ini.	2	216	1072.04	-1948			2299	817	SLV 14	0.42	No
fin.	2	-1150	-681.12	-3323			2758	1086	SLV 14	0.33	No
ini.	2	216	1072.04	-1948			2299	817	SLV 13	0.42	No
fin.	2	-1150	-681.12	-3323			2758	1086	SLV 13	0.33	No
ini.	2	-530	-1270.99	2849			2511	974	SLV 3	0.34	No
fin.	2	621	254.63	1649			2298	717	SLV 3	0.43	No
ini.	2	-759	-648.85	2949			2603	1017	SLV 2	0.34	No
fin.	2	167	762.79	1300			2298	827	SLV 2	0.64	No
ini.	2	445	449.9	-2048			2299	762	SLV 15	0.37	No
fin.	2	-696	-1189.28	-2974			2576	1005	SLV 15	0.34	No
ini.	2	-759	-648.85	2949			2603	1017	SLV 1	0.34	No
fin.	2	167	762.79	1300			2298	827	SLV 1	0.64	No
ini.	2	-393	1195.55	-117			2456	947	SLV 9	8.06	Si
fin.	2	-1219	417.1	-2112			2785	1098	SLV 9	0.52	No
ini.	2	-393	1195.55	-117			2456	947	SLV 10	8.06	Si
fin.	2	-1219	417.1	-2112			2785	1098	SLV 10	0.52	No
ini.	2	445	449.9	-2048			2299	762	SLV 16	0.37	No
fin.	2	-696	-1189.28	-2974			2576	1005	SLV 16	0.34	No
ini.	2	-530	-1270.99	2849			2511	974	SLV 4	0.34	No
fin.	2	621	254.63	1649			2298	717	SLV 4	0.43	No

Tabella dei coefficienti di sicurezza minimi

Stato limite	Coeff.s.	Comb.	Verifica
PF_SLV	2.881	SLV 7	Si
V_SLV	0.327	SLV 13	No
PF_SLU	5.597	SLU 80	Si
V_SLU	0.468	SLU 79	No