COMUNE DI CALESTANO

PROVINCIA DI PARMA

PROGETTO :

INTERVENTO DI MESSA IN SICUREZZA SCUOLA SECONDARIA DI I° GRADO, MEDIANTE OPERE DI MIGLIORAMENTO SISMICO, ARCHITETTONICO ED AMPLIAMENTO STRUTTURALE.
PNRR M4C1 - I 3.3 MINISTERO ISTRUZIONE
CUP I83H19000400001

UBICAZIONE :	VIA ROMA n. 12 - CALESTANO (PR)		
PROGETTO :	ESECUTIVO		
OGGETTO :	RELAZIONE DI CALCOLO: NUOVE REALIZZAZIONI		
TAVOLA :	STR.03	DATA : 30 SETTEMBRE 2022	
		SCALA : -	REV : -

PROGETTISTA :

ING. MARTINA ELEONORA CONCARI
con studio in Via Duca Alessandro,11 - 43123 Parma (PR)

COLLABORATORI :

ING. SIMONE LEONI
con studio in Strada per Parma, 35/H3 - Loc. Pilastro - 43013 Langhirano (PR)

ARCH. FRANCESCO PAVESI
con studio in Via Pablo, 2/2 - Loc. Torrechiara - 43013 Langhirano (PR)

ING. FILIPPO PANICIERI
con studio in Via Marconi, 8 - 43035 Felino (PR)

PROGETTO IMPIANTI MECCANICI ED ELETTRICI :

ING. ANGELO NASO
con studio in Via Duca Alessandro,11 - 43123 Parma (PR)

ING. GIAMPAOLO VECCHI
con studio in Via Mazzini, 22 - 43013 Langhirano (PR)

Viale Duca Alessandro n. 11 – 43123 Parma
Cell. 335 1403156 – E mail ing.concari@gmail.com
Sito web: studioaire.it – P.IVA 02561480340

Viale Duca Alessandro n. 11 – 43123 Parma
Cell. 335 1403156 – E mail ing.concari@gmail.com
Sito web: studioaire.it – P.IVA 02561480340

2 – RELAZIONE DI CALCOLO

2.1 – MODELLO TRIDIMENSIONALE STRUTTURA

MODELLO 1 SCALA ANTINCENDIO

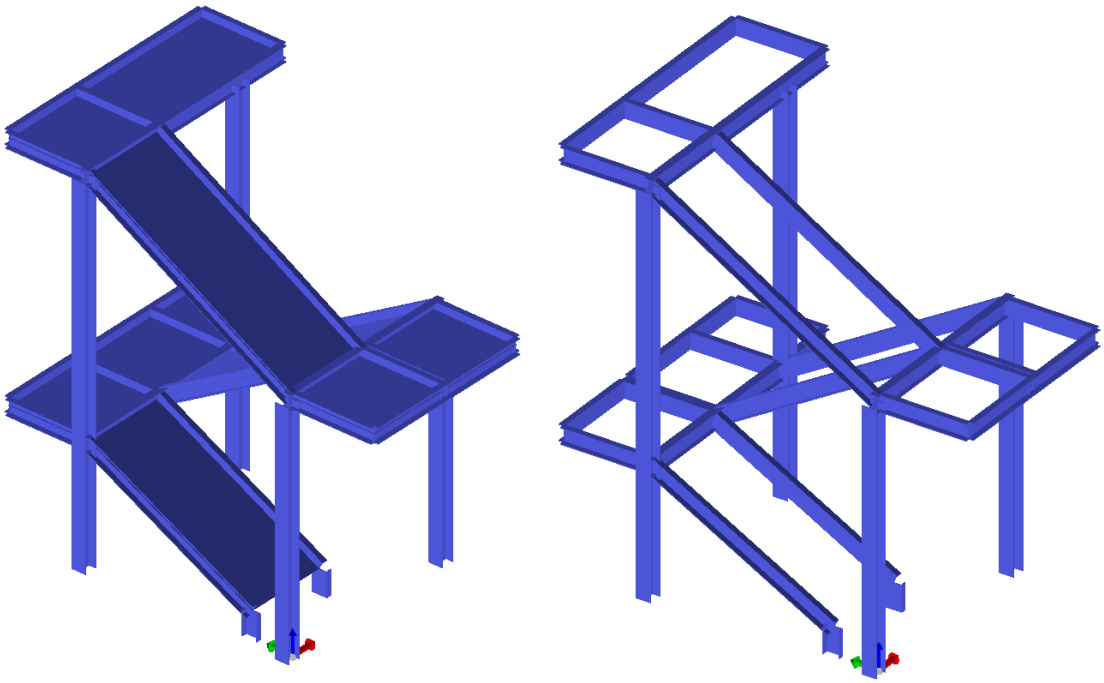

dellazione della geometria e proprietà meccaniche:	
nodi	38
elementi D2 (per aste, travi, pilastri…)	50
elementi D3 (per pareti, platee, gusci…)	0
elementi solaio	10
elementi solidi	0
Dimensione del modello strutturale [cm]:	
X min =	-10.00
Xmax =	340.00
Ymin =	-120.00
Ymax =	420.00
Zmin =	0.00
Zmax =	520.10
Strutture verticali:	
Elementi di tipo asta	NO
Pilastri	SI
Pareti	NO
Setti (a comportamento membranale)	NO
Strutture non verticali:	
Elementi di tipo asta	NO
Travi	SI
Gusci	NO
Membrane	NO
Orizzontamenti:	
Solai con la proprietà piano rigido	NO
Solai senza la proprietà piano rigido	SI
Tipo di vincoli:	
Nodi vincolati rigidamente	SI

Viale Duca Alessandro n. 11 – 43123 Parma
Cell. 335 1403156 – E mail ing.concari@gmail.com
Sito web: studioaire.it – P.IVA 02561480340

Nodi vincolati elasticamente	NO
Nodi con isolatori sismici	NO
Fondazioni puntuali (plinti/plinti su palo)	NO
Fondazioni di tipo trave	NO
Fondazioni di tipo platea	NO
Fondazioni con elementi solidi	NO

MODELLO 2 SCALA ANTINCENDIO

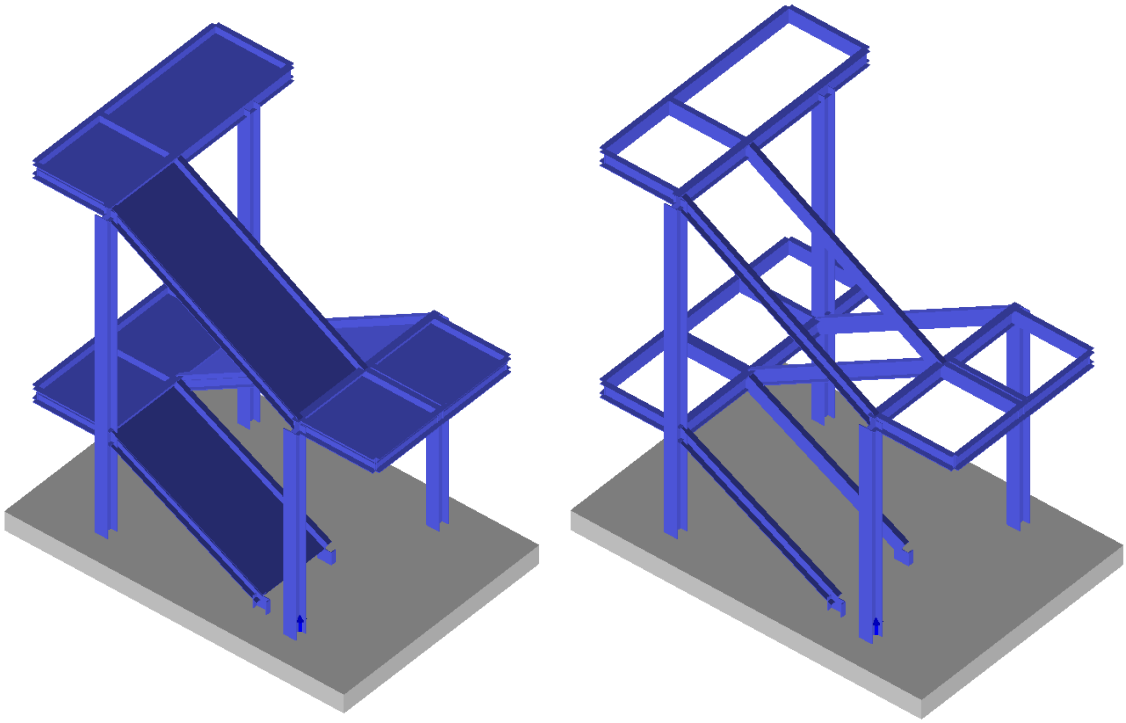

odellazione della geometria e proprietà meccaniche:	
nodi	132
elementi D2 (per aste, travi, pilastri…)	50
elementi D3 (per pareti, platee, gusci…)	81
elementi solaio	10
elementi solidi	0
Dimensione del modello strutturale [cm]:	
X min =	-60.00
Xmax =	340.00
Ymin =	-120.00
Ymax =	420.00
Zmin =	0.00
Zmax =	520.10
Strutture verticali:	
Elementi di tipo asta	NO
Pilastri	SI
Pareti	NO
Setti (a comportamento membranale)	NO
Strutture non verticali:	
Elementi di tipo asta	NO
Travi	SI
Gusci	NO

Viale Duca Alessandro n. 11 – 43123 Parma
Cell. 335 1403156 – E mail ing.concari@gmail.com
Sito web: studioaire.it – P.IVA 02561480340

Membrane	NO
Orizzontamenti:	
Solai con la proprietà piano rigido	NO
Solai senza la proprietà piano rigido	SI
Tipo di vincoli:	
Nodi vincolati rigidamente	NO
Nodi vincolati elasticamente	NO
Nodi con isolatori sismici	NO
Fondazioni puntuali (plinti/plinti su palo)	NO
Fondazioni di tipo trave	NO
Fondazioni di tipo platea	SI
Fondazioni con elementi solidi	NO

MODELLO 1 VANO ASCENSORE

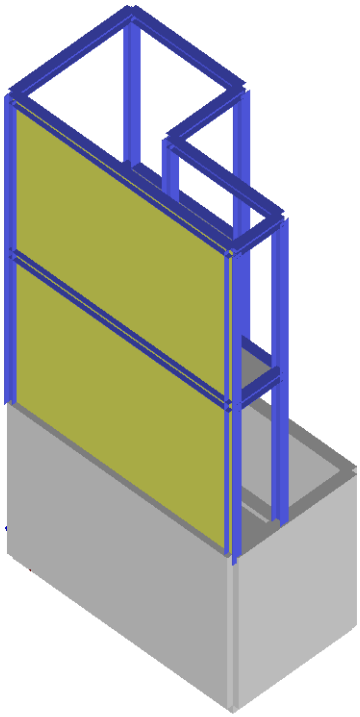

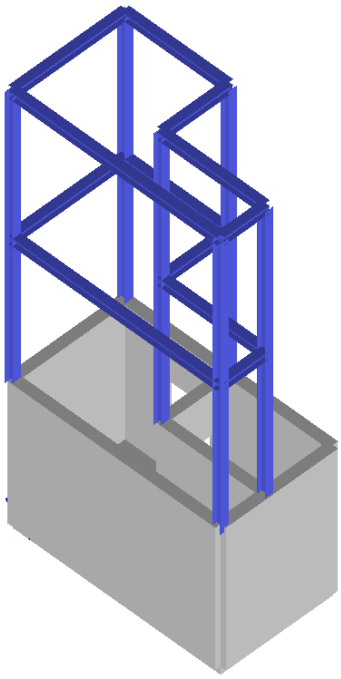

Modellazione della geometria e proprietà meccaniche:	
nodi	330
elementi D2 (per aste, travi, pilastri…)	63
elementi D3 (per pareti, platee, gusci…)	296
elementi solaio	4
elementi solidi	0

Viale Duca Alessandro n. 11 – 43123 Parma
Cell. 335 1403156 – E mail ing.concari@gmail.com
Sito web: studioaire.it – P.IVA 02561480340

Dimensione del modello strutturale [cm]:	
X min =	0.00
Xmax =	500.00
Ymin =	0.00
Ymax =	270.00
Zmin =	0.00
Zmax =	1030.00
Strutture verticali:	
Elementi di tipo asta	NO
Pilastri	SI
Pareti	SI
Setti (a comportamento membranale)	NO
Strutture non verticali:	
Elementi di tipo asta	NO
Travi	SI
Gusci	NO
Membrane	NO
Orizzontamenti:	
Solai con la proprietà piano rigido	SI
Solai senza la proprietà piano rigido	SI
Tipo di vincoli:	
Nodi vincolati rigidamente	NO
Nodi vincolati elasticamente	NO
Nodi con isolatori sismici	NO
Fondazioni puntuali (plinti/plinti su palo)	NO
Fondazioni di tipo trave	NO
Fondazioni di tipo platea	SI
Fondazioni con elementi solidi	NO

Viale Duca Alessandro n. 11 – 43123 Parma
Cell. 335 1403156 – E mail ing.concari@gmail.com
Sito web: studioaire.it – P.IVA 02561480340

MODELLO 2 VANO ASCENSORE

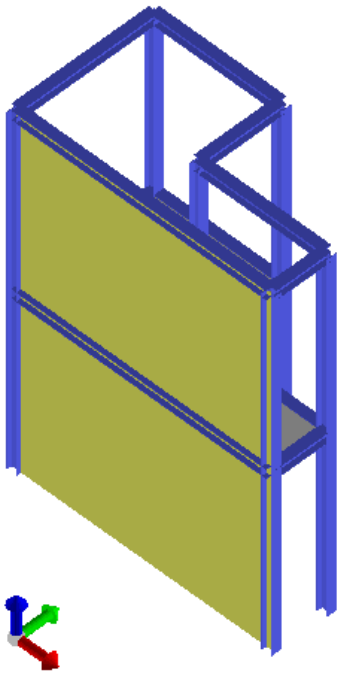

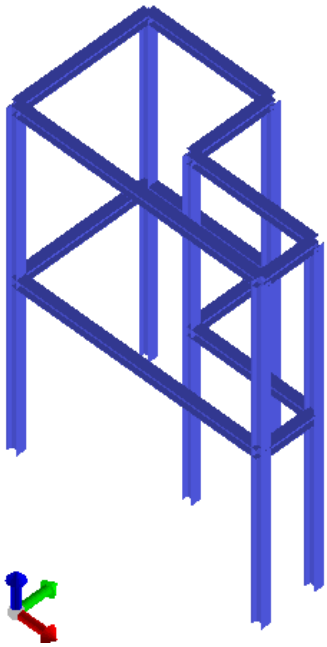

Modellazione della geometria e proprietà meccaniche:	
nodi	19
elementi D2 (per aste, travi, pilastri…)	25
elementi D3 (per pareti, platee, gusci…)	0
elementi solaio	3
elementi solidi	0
Dimensione del modello strutturale [cm]:	
X min =	0.00
Xmax =	500.00
Ymin =	0.00
Ymax =	270.00
Zmin =	330.00
Zmax =	1030.00
Strutture verticali:	
Elementi di tipo asta	NO
Pilastri	SI
Pareti	NO

Viale Duca Alessandro n. 11 – 43123 Parma
Cell. 335 1403156 – E mail ing.concari@gmail.com
Sito web: studioaire.it – P.IVA 02561480340

Setti (a comportamento membranale)	NO
Strutture non verticali:	
Elementi di tipo asta	NO
Travi	SI
Gusci	NO
Membrane	NO
Orizzontamenti:	
Solai con la proprietà piano rigido	SI
Solai senza la proprietà piano rigido	SI
Tipo di vincoli:	
Nodi vincolati rigidamente	SI
Nodi vincolati elasticamente	NO
Nodi con isolatori sismici	NO
Fondazioni puntuali (plinti/plinti su palo)	NO
Fondazioni di tipo trave	NO
Fondazioni di tipo platea	NO
Fondazioni con elementi solidi	NO

MODELLO LOCALE TECNICO

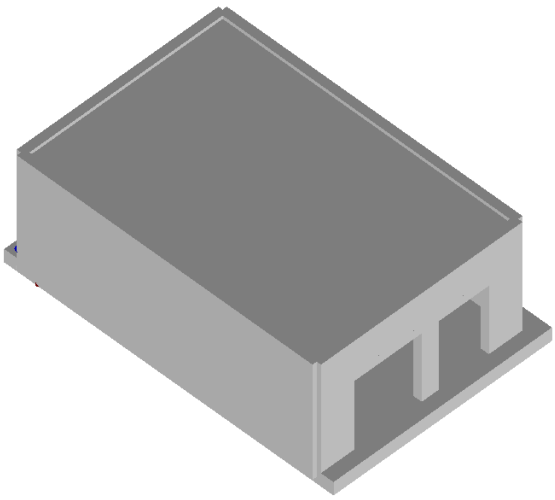

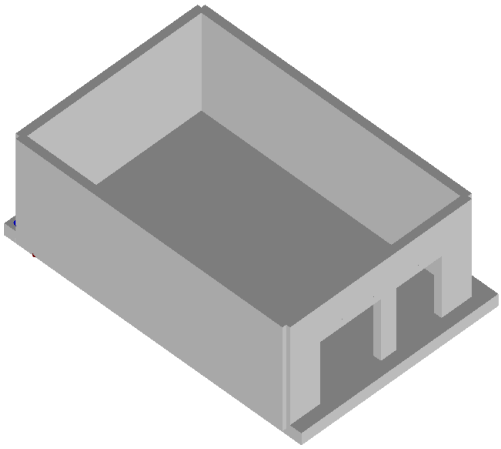

Modellazione della geometria e proprietà meccaniche:	
nodi	694
elementi D2 (per aste, travi, pilastri…)	67
elementi D3 (per pareti, platee, gusci…)	645

Viale Duca Alessandro n. 11 – 43123 Parma
Cell. 335 1403156 – E mail ing.concari@gmail.com
Sito web: studioaire.it – P.IVA 02561480340

elementi solaio	1
elementi solidi	0
Dimensione del modello strutturale [cm]:	
X min =	-50.00
Xmax =	930.00
Ymin =	0.00
Ymax =	650.00
Zmin =	0.00
Zmax =	330.00
Strutture verticali:	
Elementi di tipo asta	NO
Pilastri	NO
Pareti	SI
Setti (a comportamento membranale)	NO
Strutture non verticali:	
Elementi di tipo asta	NO
Travi	SI
Gusci	NO
Membrane	NO
Orizzontamenti:	
Solai con la proprietà piano rigido	SI
Solai senza la proprietà piano rigido	NO
Tipo di vincoli:	
Nodi vincolati rigidamente	NO
Nodi vincolati elasticamente	NO
Nodi con isolatori sismici	NO
Fondazioni puntuali (plinti/plinti su palo)	NO
Fondazioni di tipo trave	NO
Fondazioni di tipo platea	SI
Fondazioni con elementi solidi	NO

Viale Duca Alessandro n. 11 – 43123 Parma
Cell. 335 1403156 – E mail ing.concari@gmail.com
Sito web: studioaire.it – P.IVA 02561480340

2.1.1 – Identificazione e classificazione delle sezioni metalliche

PROFILATI IPE 220

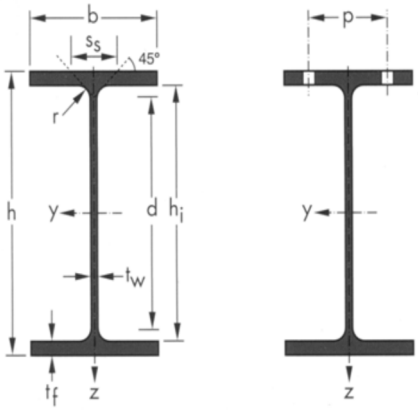

G	h	b	tw	tf	r	A	hi	d
[kg/m]	[mm]	[mm]	[mm]	[mm]	[mm]	[cm²]	[mm]	[mm]
26.2	220	110	5.9	9.2	12	33.37	201.6	177.6

Iy	Wel.y	Wpl.y	iy	Avz	Iz	Wel.z	Wpl.z	iz
[cm⁴]	[cm³]	[cm³]	[cm]	[cm²]	[cm⁴]	[cm³]	[cm³]	[cm]
2772	252	285.4	9.11	15.88	204.9	37.25	58.11	2.48

PROFILATI HEA200

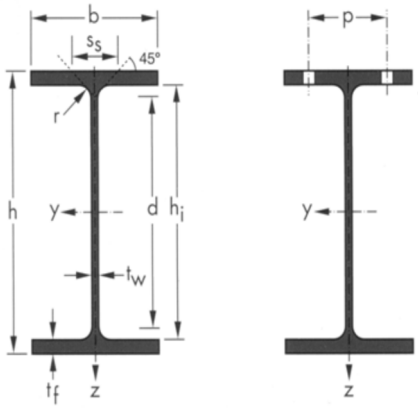

G	h	b	tw	tf	r	A	hi	d
[kg/m]	[mm]	[mm]	[mm]	[mm]	[mm]	[cm²]	[mm]	[mm]
42.3	190	200	6.5	10	18	53.83	170	134

Iy	Wel.y	Wpl.y	iy	Avz	Iz	Wel.z	Wpl.z	iz
[cm⁴]	[cm³]	[cm³]	[cm]	[cm²]	[cm⁴]	[cm³]	[cm³]	[cm]

Viale Duca Alessandro n. 11 – 43123 Parma
Cell. 335 1403156 – E mail ing.concari@gmail.com
Sito web: studioaire.it – P.IVA 02561480340

3692	388.6	429.5	8.28	18.08	1336	133.6	203.8	4.98

PROFILATI UPN220

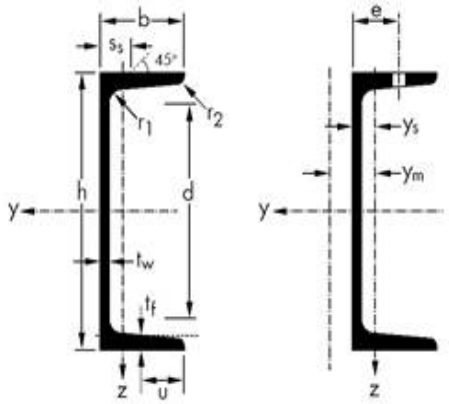

G	h	b	t_w	t_f	r_1	r_2	A	d
[kg/m]	[mm]	[mm]	[mm]	[mm]	[mm]	[mm]	[cm^2]	[mm]
29.40	220.00	80.00	9.00	12.50	12.50	6.50	37.40	167.00

I_y	$W_{el.y}$	$W_{pl.y}$	i_y	A_{vz}	I_z	$W_{el.z}$	$W_{pl.z}$	i_z
[cm^4]	[cm^3]	[cm^3]	[cm]	[cm^2]	[cm^4]	[cm^3]	[cm^3]	[cm]
2690.00	245.00	292.00	8.48	20.62	197.00	33.60	64.10	2.30

Il software ProSap calcola automaticamente la classe di appartenenza della sezione metallica.

Tutte le sezioni utilizzate sono di classe 1.

Si riportano di seguito le tabelle delle NTC2018 , tab. 4.2.III – 4.2.IV per una verifica manuale della classe di appartenenza delle sezioni metalliche utilizzate nella modellazione. Tuttavia sul sito della ditta 2si, produttrice del software ad elementi finiti ProSap, è presente una validazione che accerti e confermi tale calcolo delle classi.

Viale Duca Alessandro n. 11 – 43123 Parma
Cell. 335 1403156 – E mail ing.concari@gmail.com
Sito web: studioaire.it – P.IVA 02561480340

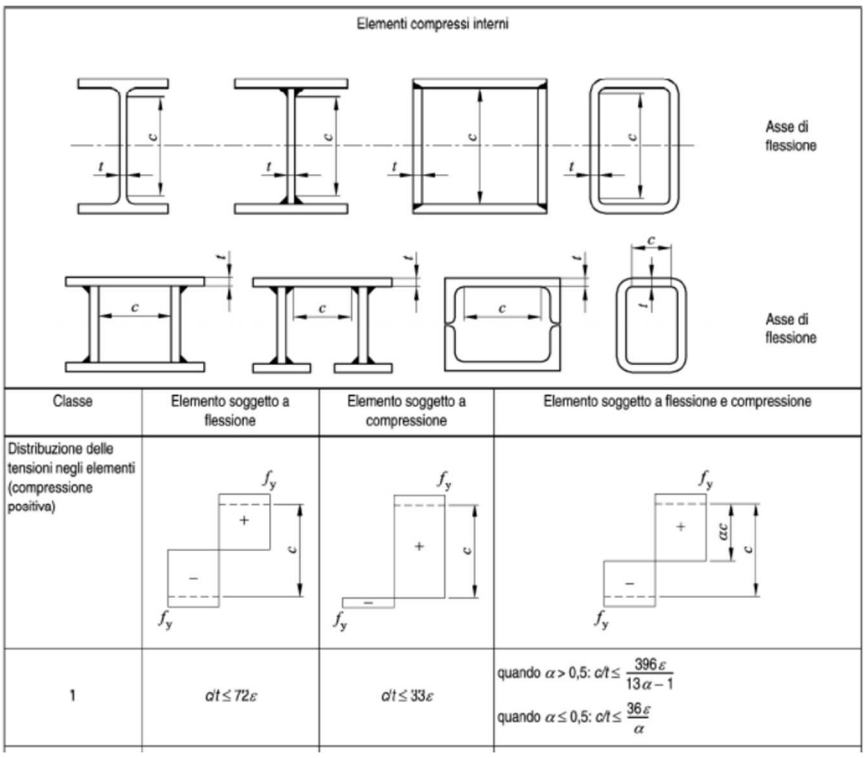

Per f_y= 275 => Ɛ= 0,92(tab.4.2.III)

anima:

parte soggetta a flessione: c/t ≤72 Ɛ

parte soggetta a compressione: c/t ≤33 Ɛ

parte soggetta a flessione e compressione: per α>0.5: c/t ≤ 396 Ɛ/(13α-1)

per α≤0.5: c/t ≤ 36 Ɛ/α

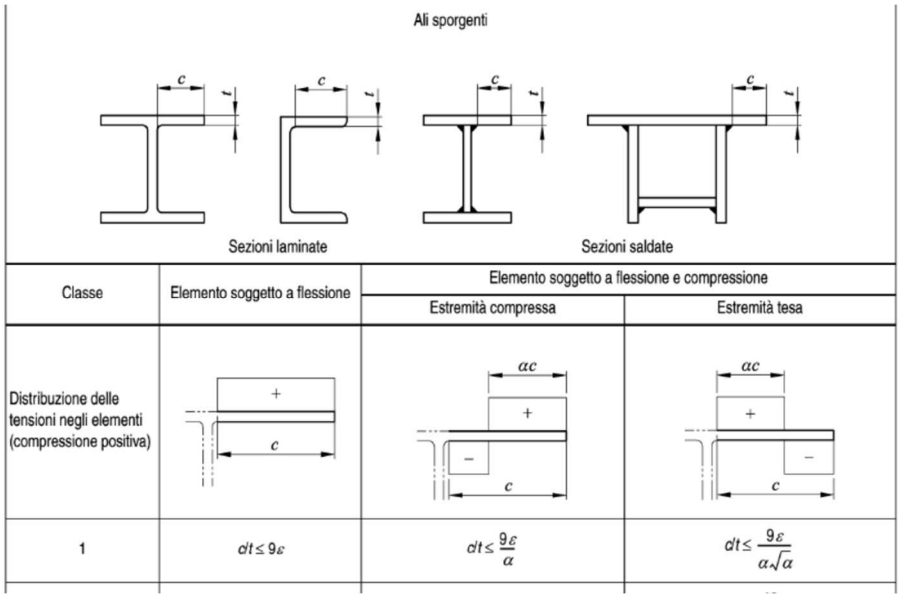

ali:

parte soggetta a flessione: c/t ≤9 Ɛ

Viale Duca Alessandro n. 11 – 43123 Parma
Cell. 335 1403156 – E mail ing.concari@gmail.com
Sito web: studioaire.it – P.IVA 02561480340

parte soggetta a flessione ecompressione: $c/t \leq 9\,\varepsilon / \alpha$

$c/t \leq 9\,\varepsilon / [\alpha \times (\alpha)^{0,5})]$

Classificazione IPE220

Anima:

per flessione: c/t= 134/6.5 = 20 < 72 ε= 66.24 classe 1
per compressione: c/t= 134/6.5 = 20 <33 ε = 30.36 classe 1

Siccome per compressione semplice e per flessione semplice la classe della sezione è la stessa, allora la classe per flessione composta è la medesima.

Ala:

per flessione: c/t= [(110-5.9)/2]/9.2 = 5.66 < 9 ε=8.28 classe 1
per flessione e compressione:
c/t= [(110-5.9)/2]/9.2 = 5.66 < 9 ε/α= 15.08 classe 1
c/t= [(110-5.9)/2]/9.2 = 5.66 $< 9\,\varepsilon/(\alpha \times \alpha^{(1/2)}) = 37.07$ classe 1

α=0,549

Pertanto è stato verificato che il profilato IPE 220 è di classe 1, come indicato dai risultati del software ProSap.

Classificazione UPN220

Anima:

per flessione: c/t= 167/9.0 = 18.55 < 72 ε= 66.24 classe 1
per compressione: c/t= 167/9.0 = 18.55 < 33 ε = 30.36 classe 1

Siccome per compressione semplice e per flessione semplice la classe della sezione è la stessa, allora la classe per flessione composta è la medesima.

Ala:

per flessione: c/t= (80-9.0)/12.50 = 5.68 < 9 ε=8.28 classe 1
per flessione e compressione:
c/t= (80-9.0)/12.50 = 5.68 < 9 ε/α = 13,47 classe 1
c/t= (80-9.0)/12.50 = 5.68 $< 9\,\varepsilon/(\alpha \times \alpha^{(1/2)}) = 17.19$ classe 1

α=0,6144

Pertanto è stato verificato che il profilato UPN 220 è di classe 1, come indicato dai risultati del software ProSap.

Classificazione HEA200

Anima:

per flessione: c/t= 134/6.5 = 20.61 < 72 ε= 66.24 classe 1
per compressione: c/t= 134/6.5 = 20.61 < 33 ε = 30.36 classe 1

Siccome per compressione semplice e per flessione semplice la classe della sezione è la stessa, allora la classe per flessione composta è la medesima.

Ala:
per flessione e compressione:
c/t= [(200-6.5)/2]/10 = 9.67 $< 9\,\varepsilon/(\alpha \times \alpha^{(1/2)}) = 14,96$ classe 1

α= 0.6739

Pertanto è stato verificato che il profilato HEA200 è di classe 1, come indicato dai risultati del software ProSap.

Viale Duca Alessandro n. 11 – 43123 Parma
Cell. 335 1403156 – E mail ing.concari@gmail.com
Sito web: studioaire.it – P.IVA 02561480340

2.1.2 – Modellazione della struttura

MODELLAZIONE DELLA STRUTTURA: NODI

MODELLO 1 SCALA ANTINCENDIO

Nodo	X	Y	Z	Nodo	X	Y	Z	Nodo	X	Y	Z
	cm	cm	cm		cm	cm	cm		cm	cm	cm
1	340.0	420.0	164.1	3	-10.0	300.0	164.1	4	250.0	420.0	164.1
5	260.0	300.0	164.1	9	260.0	0.0	342.1	10	-10.0	0.0	342.1
11	120.0	0.0	342.1	12	0.0	0.0	342.1	13	250.0	300.0	164.1
14	260.0	300.0	520.1	15	-10.0	300.0	520.1	16	0.0	60.0	35.0
17	0.0	300.0	164.1	18	250.0	-120.0	342.1	19	130.0	300.0	164.1
20	120.0	300.0	164.1	21	120.0	60.0	35.0	22	130.0	420.0	164.1
23	130.0	0.0	342.1	24	0.0	420.0	164.1	25	120.0	420.0	164.1
26	120.0	-120.0	342.1	27	130.0	-120.0	342.1	28	340.0	300.0	164.1
29	120.0	420.0	520.1	30	340.0	420.0	520.1	31	0.0	300.0	520.1
34	0.0	420.0	520.1	35	340.0	300.0	520.1	36	0.0	-120.0	342.1
37	120.0	300.0	520.1	38	250.0	0.0	342.1				

Nodo	X	Y	Z	Note	Rig. TX	Rig. TY	Rig. TZ	Rig. RX	Rig. RY	Rig. RZ
	cm	cm	cm		daN/cm	daN/cm	daN/cm	daN cm/rad	daN cm/rad	daN cm/rad
2	-10.0	300.0	0.0	v=111111						
6	-10.0	0.0	0.0	v=111111						
7	120.0	60.0	0.0	v=111111						
8	0.0	60.0	0.0	v=111111						
32	260.0	0.0	0.0	v=111111						
33	260.0	300.0	0.0	v=111111						

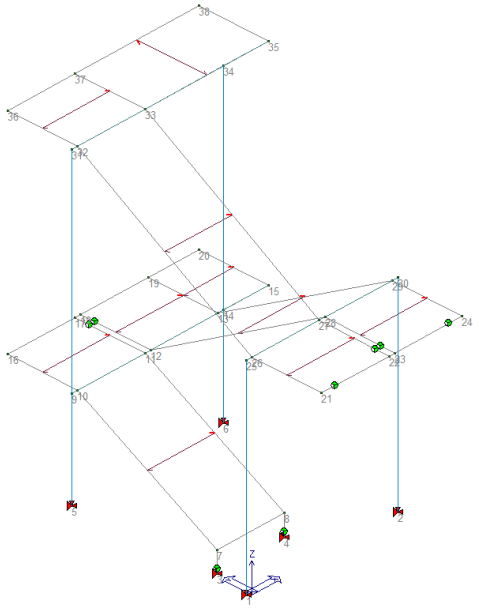

Numerazione nodi

MODELLO 2 SCALA ANTINCENDIO

Nodo	X	Y	Z	Nodo	X	Y	Z	Nodo	X	Y	Z
		cm	cm	cm		cm	cm	cm		cm	cm
1	340.0	420.0	164.1	2	-10.0	300.0	0.0	3	-10.0	300.0	164.1
4	250.0	420.0	164.1	5	260.0	300.0	164.1	6	-10.0	0.0	0.0
7	120.0	60.0	0.0	8	0.0	60.0	0.0	9	260.0	0.0	342.1
10	-10.0	0.0	342.1	11	120.0	0.0	342.1	12	0.0	0.0	342.1
13	250.0	300.0	164.1	14	260.0	300.0	520.1	15	-10.0	300.0	520.1
16	0.0	60.0	35.0	17	0.0	300.0	164.1	18	250.0	-120.0	342.1
19	130.0	300.0	164.1	20	120.0	300.0	164.1	21	120.0	60.0	35.0
22	130.0	420.0	164.1	23	130.0	0.0	342.1	24	0.0	420.0	164.1
25	120.0	420.0	164.1	26	120.0	-120.0	342.1	27	130.0	-120.0	342.1
28	340.0	300.0	164.1	29	120.0	420.0	520.1	30	340.0	420.0	520.1
31	0.0	300.0	520.1	32	260.0	0.0	0.0	33	260.0	300.0	0.0
34	0.0	420.0	520.1	35	340.0	300.0	520.1	36	0.0	-120.0	342.1
37	120.0	300.0	520.1	38	250.0	0.0	342.1	39	-60.0	60.0	0.0
40	-60.0	120.0	0.0	41	-60.0	180.0	0.0	42	-60.0	240.0	0.0

Viale Duca Alessandro n. 11 – 43123 Parma
Cell. 335 1403156 – E mail ing.concari@gmail.com
Sito web: studioaire.it – P.IVA 02561480340

43	-60.0	300.0	0.0	44	-60.0	360.0	0.0	45	-60.0	420.0	0.0
46	310.0	-120.0	0.0	47	310.0	-60.0	0.0	48	310.0	0.0	0.0
49	310.0	60.0	0.0	50	310.0	120.0	0.0	51	310.0	180.0	0.0
52	310.0	240.0	0.0	53	310.0	300.0	0.0	54	310.0	360.0	0.0
55	310.0	420.0	0.0	56	60.0	-120.0	0.0	57	60.0	-60.0	0.0
58	60.0	0.0	0.0	59	60.0	60.0	0.0	60	60.0	120.0	0.0
61	60.0	180.0	0.0	62	60.0	240.0	0.0	63	60.0	300.0	0.0
64	60.0	420.0	0.0	65	60.0	360.0	0.0	66	190.0	-120.0	0.0
67	190.0	-60.0	0.0	68	190.0	0.0	0.0	69	190.0	60.0	0.0
70	190.0	120.0	0.0	71	190.0	180.0	0.0	72	190.0	420.0	0.0
73	190.0	360.0	0.0	74	190.0	300.0	0.0	75	190.0	240.0	0.0
76	250.0	-60.0	0.0	77	260.0	-60.0	0.0	78	250.0	60.0	0.0
79	260.0	60.0	0.0	80	250.0	120.0	0.0	81	260.0	120.0	0.0
82	250.0	180.0	0.0	83	260.0	180.0	0.0	84	250.0	240.0	0.0
85	260.0	240.0	0.0	86	250.0	360.0	0.0	87	260.0	360.0	0.0
88	120.0	-60.0	0.0	89	130.0	-60.0	0.0	90	120.0	0.0	0.0
91	130.0	0.0	0.0	92	120.0	120.0	0.0	93	130.0	120.0	0.0
94	120.0	180.0	0.0	95	130.0	180.0	0.0	96	120.0	240.0	0.0
97	130.0	240.0	0.0	98	120.0	360.0	0.0	99	130.0	360.0	0.0
100	-10.0	-60.0	0.0	101	0.0	-60.0	0.0	102	-10.0	120.0	0.0
103	0.0	120.0	0.0	104	-10.0	180.0	0.0	105	0.0	180.0	0.0
106	-10.0	240.0	0.0	107	0.0	240.0	0.0	108	-10.0	360.0	0.0
109	0.0	360.0	0.0	110	-10.0	-120.0	0.0	111	-60.0	-60.0	0.0
112	260.0	420.0	0.0	113	260.0	-120.0	0.0	114	-10.0	420.0	0.0
115	250.0	0.0	0.0	116	250.0	-120.0	0.0	117	120.0	-120.0	0.0
118	130.0	-120.0	0.0	119	0.0	-120.0	0.0	120	-60.0	0.0	0.0
121	130.0	60.0	0.0	122	250.0	300.0	0.0	123	130.0	300.0	0.0
124	120.0	300.0	0.0	125	-60.0	-120.0	0.0	126	250.0	420.0	0.0
127	130.0	420.0	0.0	128	0.0	420.0	0.0	129	120.0	420.0	0.0
130	0.0	300.0	0.0	131	-10.0	60.0	0.0	132	0.0	0.0	0.0

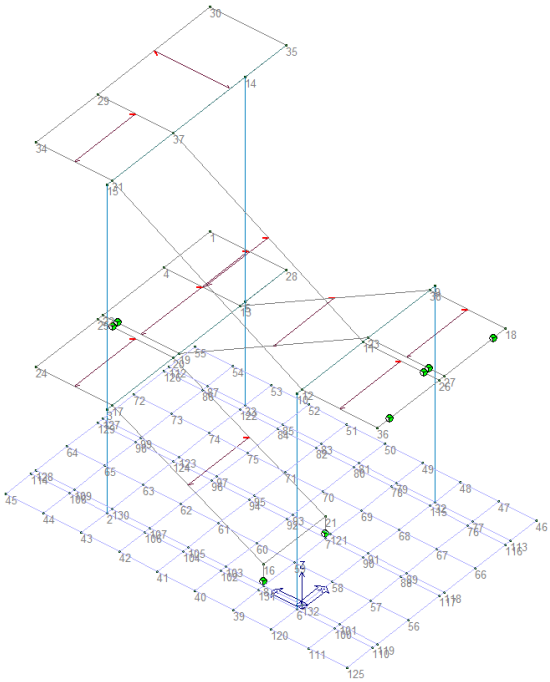

Numerazione nodi

MODELLO 1 VANO ASCENSORE

Nodo	X	Y	Z	Nodo	X	Y	Z	Nodo	X	Y	Z
	cm	cm	cm		cm	cm	cm		cm	cm	cm
1	450.0	108.0	94.3	2	450.0	108.0	47.1	3	0.0	0.0	680.0
4	0.0	270.0	680.0	5	250.0	270.0	680.0	6	500.0	0.0	680.0
7	500.0	108.0	680.0	8	250.0	108.0	680.0	9	0.0	0.0	1030.0
10	0.0	270.0	1030.0	11	250.0	270.0	1030.0	12	500.0	0.0	1030.0
13	500.0	108.0	1030.0	14	250.0	108.0	1030.0	15	0.0	0.0	0.0
16	500.0	0.0	0.0	17	500.0	270.0	0.0	18	0.0	270.0	0.0
19	0.0	216.0	0.0	20	50.0	216.0	0.0	21	50.0	270.0	0.0
22	0.0	162.0	0.0	23	50.0	162.0	0.0	24	0.0	108.0	0.0
25	50.0	108.0	0.0	26	0.0	54.0	0.0	27	50.0	54.0	0.0
28	50.0	0.0	0.0	29	100.0	216.0	0.0	30	100.0	270.0	0.0
31	100.0	162.0	0.0	32	100.0	108.0	0.0	33	100.0	54.0	0.0
34	100.0	0.0	0.0	35	150.0	216.0	0.0	36	150.0	270.0	0.0
37	150.0	162.0	0.0	38	150.0	108.0	0.0	39	150.0	54.0	0.0
40	150.0	0.0	0.0	41	200.0	216.0	0.0	42	200.0	270.0	0.0

Viale Duca Alessandro n. 11 – 43123 Parma
Cell. 335 1403156 – E mail ing.concari@gmail.com
Sito web: studioaire.it – P.IVA 02561480340

Nodo	X	Y	Z	Nodo	X	Y	Z	Nodo	X	Y	Z
43	200.0	162.0	0.0	44	200.0	108.0	0.0	45	200.0	54.0	0.0
46	200.0	0.0	0.0	47	250.0	236.0	0.0	48	250.0	270.0	0.0
49	250.0	142.0	0.0	50	250.0	108.0	0.0	51	250.0	54.0	0.0
52	250.0	0.0	0.0	53	300.0	216.0	0.0	54	300.0	270.0	0.0
55	300.0	162.0	0.0	56	300.0	108.0	0.0	57	300.0	54.0	0.0
58	300.0	0.0	0.0	59	350.0	216.0	0.0	60	350.0	270.0	0.0
61	350.0	162.0	0.0	62	350.0	108.0	0.0	63	350.0	54.0	0.0
64	350.0	0.0	0.0	65	400.0	216.0	0.0	66	400.0	270.0	0.0
67	400.0	162.0	0.0	68	400.0	108.0	0.0	69	400.0	54.0	0.0
70	400.0	0.0	0.0	71	450.0	216.0	0.0	72	450.0	270.0	0.0
73	450.0	162.0	0.0	74	450.0	108.0	0.0	75	450.0	54.0	0.0
76	450.0	0.0	0.0	77	500.0	216.0	0.0	78	500.0	162.0	0.0
79	500.0	108.0	0.0	80	500.0	54.0	0.0	81	400.0	108.0	235.7
82	400.0	108.0	188.6	83	400.0	108.0	141.4	84	400.0	108.0	94.3
85	400.0	108.0	47.1	86	450.0	108.0	282.9	87	450.0	108.0	330.0
88	450.0	108.0	235.7	89	450.0	108.0	188.6	90	450.0	108.0	141.4
91	250.0	0.0	680.0	92	0.0	0.0	47.1	93	0.0	54.0	47.1
94	0.0	0.0	94.3	95	0.0	54.0	94.3	96	0.0	0.0	141.4
97	0.0	54.0	141.4	98	0.0	0.0	188.6	99	0.0	54.0	188.6
100	0.0	0.0	235.7	101	0.0	54.0	235.7	102	0.0	0.0	282.9
103	0.0	54.0	282.9	104	0.0	0.0	330.0	105	0.0	54.0	330.0
106	0.0	108.0	47.1	107	0.0	108.0	94.3	108	0.0	108.0	141.4
109	0.0	108.0	188.6	110	0.0	108.0	235.7	111	0.0	108.0	282.9
112	0.0	108.0	330.0	113	0.0	162.0	47.1	114	0.0	162.0	94.3
115	0.0	162.0	141.4	116	0.0	162.0	188.6	117	0.0	162.0	235.7
118	0.0	162.0	282.9	119	0.0	162.0	330.0	120	0.0	216.0	47.1
121	0.0	216.0	94.3	122	0.0	216.0	141.4	123	0.0	216.0	188.6
124	0.0	216.0	235.7	125	0.0	216.0	282.9	126	0.0	216.0	330.0
127	0.0	270.0	47.1	128	0.0	270.0	94.3	129	0.0	270.0	141.4
130	0.0	270.0	188.6	131	0.0	270.0	235.7	132	0.0	270.0	282.9
133	0.0	270.0	330.0	134	50.0	270.0	282.9	135	50.0	270.0	330.0
136	50.0	270.0	235.7	137	50.0	270.0	188.6	138	50.0	270.0	141.4
139	50.0	270.0	94.3	140	50.0	270.0	47.1	141	100.0	270.0	282.9
142	100.0	270.0	330.0	143	100.0	270.0	235.7	144	100.0	270.0	188.6
145	100.0	270.0	141.4	146	100.0	270.0	94.3	147	100.0	270.0	47.1
148	150.0	270.0	282.9	149	150.0	270.0	330.0	150	150.0	270.0	235.7
151	500.0	162.0	47.1	152	500.0	216.0	282.9	153	500.0	216.0	330.0
154	500.0	216.0	235.7	155	200.0	270.0	282.9	156	200.0	270.0	330.0
157	200.0	270.0	235.7	158	500.0	216.0	188.6	159	500.0	216.0	141.4
160	500.0	216.0	94.3	161	500.0	216.0	47.1	162	250.0	270.0	282.9
163	250.0	270.0	330.0	164	250.0	270.0	235.7	165	250.0	270.0	188.6
166	250.0	270.0	141.4	167	250.0	270.0	94.3	168	250.0	270.0	47.1
169	300.0	270.0	282.9	170	300.0	270.0	330.0	171	300.0	270.0	235.7
172	300.0	270.0	188.6	173	300.0	270.0	141.4	174	300.0	270.0	94.3
175	300.0	270.0	47.1	176	350.0	270.0	282.9	177	350.0	270.0	330.0
178	350.0	270.0	235.7	179	350.0	270.0	188.6	180	350.0	270.0	141.4
181	350.0	270.0	94.3	182	350.0	270.0	47.1	183	400.0	270.0	282.9
184	400.0	270.0	330.0	185	400.0	270.0	235.7	186	400.0	270.0	188.6
187	400.0	270.0	141.4	188	400.0	270.0	94.3	189	400.0	270.0	47.1
190	450.0	270.0	282.9	191	450.0	270.0	330.0	192	450.0	270.0	235.7
193	450.0	270.0	188.6	194	450.0	270.0	141.4	195	450.0	270.0	94.3
196	450.0	270.0	47.1	197	500.0	270.0	282.9	198	500.0	270.0	330.0
199	500.0	270.0	235.7	200	500.0	270.0	188.6	201	500.0	270.0	141.4
202	500.0	270.0	94.3	203	500.0	270.0	47.1	204	50.0	0.0	282.9
205	50.0	0.0	330.0	206	50.0	0.0	235.7	207	50.0	0.0	188.6
208	50.0	0.0	141.4	209	50.0	0.0	94.3	210	50.0	0.0	47.1
211	100.0	0.0	282.9	212	100.0	0.0	330.0	213	100.0	0.0	235.7
214	100.0	0.0	188.6	215	100.0	0.0	141.4	216	100.0	0.0	94.3
217	100.0	0.0	47.1	218	150.0	0.0	282.9	219	150.0	0.0	330.0
220	150.0	0.0	235.7	221	150.0	0.0	188.6	222	150.0	0.0	141.4
223	150.0	0.0	94.3	224	150.0	0.0	47.1	225	200.0	0.0	282.9
226	200.0	0.0	330.0	227	200.0	0.0	235.7	228	200.0	0.0	188.6
229	200.0	0.0	141.4	230	200.0	0.0	94.3	231	200.0	0.0	47.1
232	250.0	0.0	282.9	233	250.0	0.0	330.0	234	250.0	0.0	235.7
235	250.0	0.0	188.6	236	250.0	0.0	141.4	237	250.0	0.0	94.3
238	250.0	0.0	47.1	239	300.0	0.0	282.9	240	300.0	0.0	330.0
241	300.0	0.0	235.7	242	300.0	0.0	188.6	243	300.0	0.0	141.4
244	300.0	0.0	94.3	245	300.0	0.0	47.1	246	350.0	0.0	282.9
247	350.0	0.0	330.0	248	350.0	0.0	235.7	249	350.0	0.0	188.6
250	350.0	0.0	141.4	251	350.0	0.0	94.3	252	350.0	0.0	47.1
253	400.0	0.0	282.9	254	400.0	0.0	330.0	255	400.0	0.0	235.7
256	400.0	0.0	188.6	257	400.0	0.0	141.4	258	400.0	0.0	94.3
259	400.0	0.0	47.1	260	450.0	0.0	282.9	261	450.0	0.0	330.0
262	450.0	0.0	235.7	263	450.0	0.0	188.6	264	450.0	0.0	141.4
265	450.0	0.0	94.3	266	450.0	0.0	47.1	267	500.0	0.0	282.9
268	500.0	0.0	330.0	269	500.0	0.0	235.7	270	500.0	0.0	188.6
271	500.0	0.0	141.4	272	500.0	0.0	94.3	273	500.0	0.0	47.1
274	500.0	54.0	282.9	275	500.0	54.0	330.0	276	500.0	54.0	235.7
277	500.0	54.0	188.6	278	500.0	54.0	141.4	279	500.0	54.0	94.3
280	500.0	54.0	47.1	281	500.0	108.0	282.9	282	500.0	108.0	330.0
283	500.0	108.0	235.7	284	500.0	108.0	188.6	285	500.0	108.0	141.4
286	500.0	108.0	94.3	287	500.0	108.0	47.1	288	500.0	162.0	282.9
289	500.0	162.0	330.0	290	500.0	162.0	235.7	291	500.0	162.0	188.6
292	500.0	162.0	141.4	293	500.0	162.0	94.3	294	250.0	216.0	282.9
295	250.0	216.0	330.0	296	250.0	236.0	235.7	297	250.0	236.0	188.6
298	250.0	236.0	141.4	299	250.0	236.0	94.3	300	250.0	236.0	47.1
301	250.0	162.0	282.9	302	250.0	162.0	330.0	303	250.0	142.0	235.7
304	250.0	142.0	188.6	305	250.0	142.0	141.4	306	250.0	142.0	94.3
307	250.0	142.0	47.1	308	250.0	108.0	282.9	309	250.0	108.0	330.0
310	250.0	108.0	235.7	311	250.0	108.0	188.6	312	250.0	108.0	141.4
313	250.0	108.0	94.3	314	250.0	108.0	47.1	315	300.0	108.0	282.9
316	300.0	108.0	330.0	317	300.0	108.0	235.7	318	300.0	108.0	188.6
319	300.0	108.0	141.4	320	300.0	108.0	94.3	321	300.0	108.0	47.1

Viale Duca Alessandro n. 11 – 43123 Parma
Cell. 335 1403156 – E mail ing.concari@gmail.com
Sito web: studioaire.it – P.IVA 02561480340

Nodo	X	Y	Z	Nodo	X	Y	Z	Nodo	X	Y	Z
322	350.0	108.0	282.9	323	350.0	108.0	330.0	324	350.0	108.0	235.7
325	350.0	108.0	188.6	326	350.0	108.0	141.4	327	350.0	108.0	94.3
328	350.0	108.0	47.1	329	400.0	108.0	282.9	330	400.0	108.0	330.0

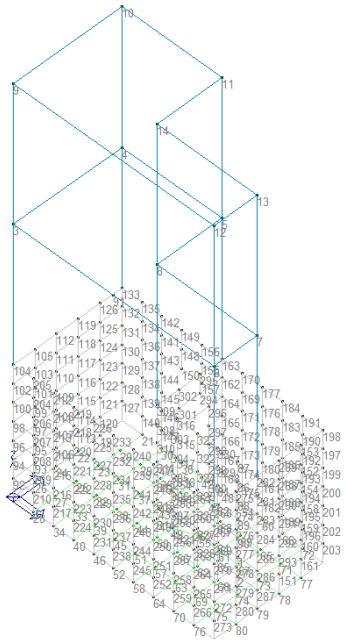

Numerazione nodi

MODELLO 2 VANO ASCENSORE

Nodo	X	Y	Z	Nodo	X	Y	Z	Nodo	X	Y	Z
	cm	cm	cm		cm	cm	cm		cm	cm	cm
2	250.0	0.0	680.0	3	0.0	0.0	680.0	4	0.0	270.0	680.0
5	250.0	270.0	680.0	6	500.0	0.0	680.0	7	500.0	108.0	680.0
8	250.0	108.0	680.0	9	0.0	0.0	1030.0	10	0.0	270.0	1030.0
11	250.0	270.0	1030.0	12	500.0	0.0	1030.0	13	500.0	108.0	1030.0
14	250.0	108.0	1030.0								

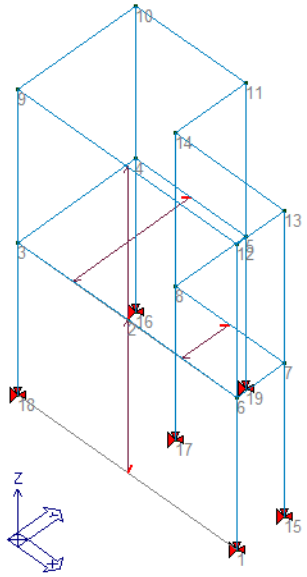

Numerazione nodi

Viale Duca Alessandro n. 11 – 43123 Parma
Cell. 335 1403156 – E mail ing.concari@gmail.com
Sito web: studioaire.it – P.IVA 02561480340

MODELLO LOCALE TECNICO

Nodo	X	Y	Z	Nodo	X	Y	Z	Nodo	X	Y	Z
	cm	cm	cm		cm	cm	cm		cm	cm	cm
1	0.0	600.0	330.0	2	880.0	0.0	330.0	3	880.0	600.0	330.0
4	0.0	600.0	282.9	5	48.9	600.0	282.9	6	48.9	600.0	330.0
7	0.0	600.0	235.7	8	48.9	600.0	235.7	9	0.0	600.0	188.6
10	48.9	600.0	188.6	11	0.0	600.0	141.4	12	48.9	600.0	141.4
13	0.0	600.0	94.3	14	48.9	600.0	94.3	15	0.0	600.0	47.1
16	48.9	600.0	47.1	17	48.9	600.0	0.0	18	97.8	600.0	282.9
19	97.8	600.0	330.0	20	97.8	600.0	235.7	21	97.8	600.0	188.6
22	97.8	600.0	141.4	23	97.8	600.0	94.3	24	97.8	600.0	47.1
25	97.8	600.0	0.0	26	146.7	600.0	282.9	27	146.7	600.0	330.0
28	146.7	600.0	235.7	29	146.7	600.0	188.6	30	146.7	600.0	141.4
31	146.7	600.0	94.3	32	146.7	600.0	47.1	33	146.7	600.0	0.0
34	195.6	600.0	282.9	35	195.6	600.0	330.0	36	195.6	600.0	235.7
37	195.6	600.0	188.6	38	195.6	600.0	141.4	39	195.6	600.0	94.3
40	195.6	600.0	47.1	41	195.6	600.0	0.0	42	244.4	600.0	282.9
43	244.4	600.0	330.0	44	244.4	600.0	235.7	45	244.4	600.0	188.6
46	244.4	600.0	141.4	47	244.4	600.0	94.3	48	244.4	600.0	47.1
49	244.4	600.0	0.0	50	293.3	600.0	282.9	51	293.3	600.0	330.0
52	293.3	600.0	235.7	53	293.3	600.0	188.6	54	293.3	600.0	141.4
55	293.3	600.0	94.3	56	293.3	600.0	47.1	57	293.3	600.0	0.0
58	342.2	600.0	282.9	59	342.2	600.0	330.0	60	342.2	600.0	235.7
61	342.2	600.0	188.6	62	342.2	600.0	141.4	63	342.2	600.0	94.3
64	342.2	600.0	47.1	65	342.2	600.0	0.0	66	391.1	600.0	282.9
67	391.1	600.0	330.0	68	391.1	600.0	235.7	69	391.1	600.0	188.6
70	391.1	600.0	141.4	71	391.1	600.0	94.3	72	391.1	600.0	47.1
73	391.1	600.0	0.0	74	440.0	600.0	282.9	75	440.0	600.0	330.0
76	440.0	600.0	235.7	77	440.0	600.0	188.6	78	440.0	600.0	141.4
79	440.0	600.0	94.3	80	440.0	600.0	47.1	81	440.0	600.0	0.0
82	488.9	600.0	282.9	83	488.9	600.0	330.0	84	488.9	600.0	235.7
85	488.9	600.0	188.6	86	488.9	600.0	141.4	87	488.9	600.0	94.3
88	488.9	600.0	47.1	89	488.9	600.0	0.0	90	537.8	600.0	282.9
91	537.8	600.0	330.0	92	537.8	600.0	235.7	93	537.8	600.0	188.6
94	537.8	600.0	141.4	95	537.8	600.0	94.3	96	537.8	600.0	47.1
97	537.8	600.0	0.0	98	586.7	600.0	282.9	99	586.7	600.0	330.0
100	586.7	600.0	235.7	101	586.7	600.0	188.6	102	586.7	600.0	141.4
103	586.7	600.0	94.3	104	586.7	600.0	47.1	105	586.7	600.0	0.0
106	635.6	600.0	282.9	107	635.6	600.0	330.0	108	635.6	600.0	235.7
109	635.6	600.0	188.6	110	635.6	600.0	141.4	111	635.6	600.0	94.3
112	635.6	600.0	47.1	113	635.6	600.0	0.0	114	684.4	600.0	282.9
115	684.4	600.0	330.0	116	684.4	600.0	235.7	117	684.4	600.0	188.6
118	684.4	600.0	141.4	119	684.4	600.0	94.3	120	684.4	600.0	47.1
121	684.4	600.0	0.0	122	733.3	600.0	282.9	123	733.3	600.0	330.0
124	733.3	600.0	235.7	125	733.3	600.0	188.6	126	733.3	600.0	141.4
127	733.3	600.0	94.3	128	733.3	600.0	47.1	129	733.3	600.0	0.0
130	782.2	600.0	282.9	131	782.2	600.0	330.0	132	782.2	600.0	235.7
133	782.2	600.0	188.6	134	782.2	600.0	141.4	135	782.2	600.0	94.3
136	782.2	600.0	47.1	137	782.2	600.0	0.0	138	831.1	600.0	282.9
139	831.1	600.0	330.0	140	831.1	600.0	235.7	141	831.1	600.0	188.6
142	831.1	600.0	141.4	143	831.1	600.0	94.3	144	831.1	600.0	47.1
145	831.1	600.0	0.0	146	880.0	600.0	282.9	147	880.0	600.0	235.7
148	880.0	600.0	188.6	149	880.0	600.0	141.4	150	880.0	600.0	94.3
151	880.0	600.0	47.1	152	0.0	0.0	282.9	153	48.9	0.0	282.9
154	48.9	0.0	330.0	155	0.0	0.0	235.7	156	48.9	0.0	235.7
157	0.0	0.0	188.6	158	48.9	0.0	188.6	159	0.0	0.0	141.4
160	48.9	0.0	141.4	161	0.0	0.0	94.3	162	48.9	0.0	94.3
163	0.0	0.0	47.1	164	48.9	0.0	47.1	165	48.9	0.0	0.0
166	97.8	0.0	282.9	167	97.8	0.0	330.0	168	97.8	0.0	235.7
169	97.8	0.0	188.6	170	97.8	0.0	141.4	171	97.8	0.0	94.3
172	97.8	0.0	47.1	173	97.8	0.0	0.0	174	146.7	0.0	282.9
175	146.7	0.0	330.0	176	146.7	0.0	235.7	177	146.7	0.0	188.6
178	146.7	0.0	141.4	179	146.7	0.0	94.3	180	146.7	0.0	47.1
181	146.7	0.0	0.0	182	195.6	0.0	282.9	183	195.6	0.0	330.0
184	195.6	0.0	235.7	185	195.6	0.0	188.6	186	195.6	0.0	141.4
187	195.6	0.0	94.3	188	195.6	0.0	47.1	189	195.6	0.0	0.0
190	244.4	0.0	282.9	191	244.4	0.0	330.0	192	244.4	0.0	235.7
193	244.4	0.0	188.6	194	244.4	0.0	141.4	195	244.4	0.0	94.3
196	244.4	0.0	47.1	197	244.4	0.0	0.0	198	293.3	0.0	282.9
199	293.3	0.0	330.0	200	293.3	0.0	235.7	201	293.3	0.0	188.6
202	293.3	0.0	141.4	203	293.3	0.0	94.3	204	293.3	0.0	47.1
205	293.3	0.0	0.0	206	342.2	0.0	282.9	207	342.2	0.0	330.0
208	342.2	0.0	235.7	209	342.2	0.0	188.6	210	342.2	0.0	141.4
211	342.2	0.0	94.3	212	342.2	0.0	47.1	213	342.2	0.0	0.0
214	391.1	0.0	282.9	215	391.1	0.0	330.0	216	391.1	0.0	235.7
217	391.1	0.0	188.6	218	391.1	0.0	141.4	219	391.1	0.0	94.3
220	391.1	0.0	47.1	221	391.1	0.0	0.0	222	440.0	0.0	282.9
223	440.0	0.0	330.0	224	440.0	0.0	235.7	225	440.0	0.0	188.6
226	440.0	0.0	141.4	227	440.0	0.0	94.3	228	440.0	0.0	47.1
229	440.0	0.0	0.0	230	488.9	0.0	282.9	231	488.9	0.0	330.0
232	488.9	0.0	235.7	233	488.9	0.0	188.6	234	488.9	0.0	141.4
235	488.9	0.0	94.3	236	488.9	0.0	47.1	237	488.9	0.0	0.0
238	537.8	0.0	282.9	239	537.8	0.0	330.0	240	537.8	0.0	235.7
241	537.8	0.0	188.6	242	537.8	0.0	141.4	243	537.8	0.0	94.3
244	537.8	0.0	47.1	245	537.8	0.0	0.0	246	586.7	0.0	282.9
247	586.7	0.0	330.0	248	586.7	0.0	235.7	249	586.7	0.0	188.6
250	586.7	0.0	141.4	251	586.7	0.0	94.3	252	586.7	0.0	47.1
253	586.7	0.0	0.0	254	635.6	0.0	282.9	255	635.6	0.0	330.0
256	635.6	0.0	235.7	257	635.6	0.0	188.6	258	635.6	0.0	141.4
259	635.6	0.0	94.3	260	635.6	0.0	47.1	261	635.6	0.0	0.0
262	684.4	0.0	282.9	263	684.4	0.0	330.0	264	684.4	0.0	235.7
265	684.4	0.0	188.6	266	684.4	0.0	141.4	267	684.4	0.0	94.3
268	684.4	0.0	47.1	269	684.4	0.0	0.0	270	733.3	0.0	282.9
271	733.3	0.0	330.0	272	733.3	0.0	235.7	273	733.3	0.0	188.6

Viale Duca Alessandro n. 11 – 43123 Parma
Cell. 335 1403156 – E mail ing.concari@gmail.com
Sito web: studioaire.it – P.IVA 02561480340

274	733.3	0.0	141.4	275	733.3	0.0	94.3	276	733.3	0.0	47.1
277	733.3	0.0	0.0	278	782.2	0.0	282.9	279	782.2	0.0	330.0
280	782.2	0.0	235.7	281	782.2	0.0	188.6	282	782.2	0.0	141.4
283	782.2	0.0	94.3	284	782.2	0.0	47.1	285	782.2	0.0	0.0
286	831.1	0.0	282.9	287	831.1	0.0	330.0	288	831.1	0.0	235.7
289	831.1	0.0	188.6	290	831.1	0.0	141.4	291	831.1	0.0	94.3
292	831.1	0.0	47.1	293	831.1	0.0	0.0	294	880.0	0.0	282.9
295	880.0	0.0	235.7	296	880.0	0.0	188.6	297	880.0	0.0	141.4
298	880.0	0.0	94.3	299	880.0	0.0	47.1	300	0.0	50.0	282.9
301	0.0	50.0	330.0	302	0.0	50.0	235.7	303	0.0	50.0	188.6
304	0.0	50.0	141.4	305	0.0	50.0	94.3	306	0.0	50.0	47.1
307	0.0	50.0	0.0	308	0.0	100.0	282.9	309	0.0	100.0	330.0
310	0.0	100.0	235.7	311	0.0	100.0	188.6	312	0.0	100.0	141.4
313	0.0	100.0	94.3	314	0.0	100.0	47.1	315	0.0	100.0	0.0
316	0.0	150.0	282.9	317	0.0	150.0	330.0	318	0.0	150.0	235.7
319	0.0	150.0	188.6	320	0.0	150.0	141.4	321	0.0	150.0	94.3
322	0.0	150.0	47.1	323	0.0	150.0	0.0	324	0.0	200.0	282.9
325	0.0	200.0	330.0	326	0.0	200.0	235.7	327	0.0	200.0	188.6
328	0.0	200.0	141.4	329	0.0	200.0	94.3	330	0.0	200.0	47.1
331	0.0	200.0	0.0	332	0.0	250.0	282.9	333	0.0	250.0	330.0
334	0.0	250.0	235.7	335	0.0	250.0	188.6	336	0.0	250.0	141.4
337	0.0	250.0	94.3	338	0.0	250.0	47.1	339	0.0	250.0	0.0
340	0.0	300.0	282.9	341	0.0	300.0	330.0	342	0.0	300.0	235.7
343	0.0	300.0	188.6	344	0.0	300.0	141.4	345	0.0	300.0	94.3
346	0.0	300.0	47.1	347	0.0	300.0	0.0	348	0.0	350.0	282.9
349	0.0	350.0	330.0	350	0.0	350.0	235.7	351	0.0	350.0	188.6
352	0.0	350.0	141.4	353	0.0	350.0	94.3	354	0.0	350.0	47.1
355	0.0	350.0	0.0	356	0.0	400.0	282.9	357	0.0	400.0	330.0
358	0.0	400.0	235.7	359	0.0	400.0	188.6	360	0.0	400.0	141.4
361	0.0	400.0	94.3	362	0.0	400.0	47.1	363	0.0	400.0	0.0
364	0.0	450.0	282.9	365	0.0	450.0	330.0	366	0.0	450.0	235.7
367	0.0	450.0	188.6	368	0.0	450.0	141.4	369	0.0	450.0	94.3
370	0.0	450.0	47.1	371	0.0	450.0	0.0	372	0.0	500.0	282.9
373	0.0	500.0	330.0	374	0.0	500.0	235.7	375	0.0	500.0	188.6
376	0.0	500.0	141.4	377	0.0	500.0	94.3	378	0.0	500.0	47.1
379	0.0	500.0	0.0	380	0.0	550.0	282.9	381	0.0	550.0	330.0
382	0.0	550.0	235.7	383	0.0	550.0	188.6	384	0.0	550.0	141.4
385	0.0	550.0	94.3	386	0.0	550.0	47.1	387	0.0	550.0	0.0
388	880.0	50.0	282.9	389	880.0	50.0	330.0	390	880.0	50.0	235.7
391	880.0	50.0	188.6	392	880.0	50.0	141.4	393	880.0	50.0	94.3
394	880.0	50.0	47.1	395	880.0	50.0	0.0	396	880.0	100.0	282.9
397	880.0	100.0	330.0	398	880.0	100.0	235.7	399	880.0	100.0	188.6
400	880.0	100.0	141.4	401	880.0	100.0	94.3	402	880.0	100.0	47.1
403	880.0	100.0	0.0	404	880.0	150.0	282.9	405	880.0	150.0	330.0
406	880.0	150.0	235.7	407	48.9	650.0	0.0	408	97.8	650.0	0.0
409	146.7	650.0	0.0	410	195.6	650.0	0.0	411	880.0	150.0	0.0
412	880.0	200.0	282.9	413	880.0	200.0	330.0	414	880.0	200.0	235.7
415	244.4	650.0	0.0	416	293.3	650.0	0.0	417	342.2	650.0	0.0
418	391.1	650.0	0.0	419	880.0	200.0	0.0	420	880.0	250.0	282.9
421	880.0	250.0	330.0	422	880.0	250.0	235.7	423	440.0	650.0	0.0
424	488.9	650.0	0.0	425	537.8	650.0	0.0	426	586.7	650.0	0.0
427	880.0	250.0	0.0	428	880.0	300.0	282.9	429	880.0	300.0	330.0
430	880.0	300.0	235.7	431	880.0	300.0	188.6	432	880.0	300.0	141.4
433	880.0	300.0	94.3	434	880.0	300.0	47.1	435	880.0	300.0	0.0
436	880.0	350.0	282.9	437	880.0	350.0	330.0	438	880.0	350.0	235.7
439	880.0	350.0	188.6	440	880.0	350.0	141.4	441	880.0	350.0	94.3
442	880.0	350.0	47.1	443	880.0	350.0	0.0	444	880.0	400.0	282.9
445	880.0	400.0	330.0	446	880.0	400.0	235.7	447	635.6	650.0	0.0
448	684.4	650.0	0.0	449	733.3	650.0	0.0	450	782.2	650.0	0.0
451	880.0	400.0	0.0	452	880.0	450.0	282.9	453	880.0	450.0	330.0
454	880.0	450.0	235.7	455	831.1	650.0	0.0	456	880.0	650.0	0.0
457	930.0	650.0	0.0	458	-50.0	650.0	0.0	459	880.0	450.0	0.0
460	880.0	500.0	282.9	461	880.0	500.0	330.0	462	880.0	500.0	235.7
463	880.0	500.0	188.6	464	880.0	500.0	141.4	465	880.0	500.0	94.3
466	880.0	500.0	47.1	467	880.0	500.0	0.0	468	880.0	550.0	282.9
469	880.0	550.0	330.0	470	880.0	550.0	235.7	471	880.0	550.0	188.6
472	880.0	550.0	141.4	473	880.0	550.0	94.3	474	880.0	550.0	47.1
475	880.0	550.0	0.0	476	48.9	50.0	0.0	477	48.9	100.0	0.0
478	48.9	150.0	0.0	479	48.9	200.0	0.0	480	48.9	250.0	0.0
481	48.9	300.0	0.0	482	48.9	350.0	0.0	483	48.9	400.0	0.0
484	48.9	450.0	0.0	485	48.9	500.0	0.0	486	48.9	550.0	0.0
487	97.8	50.0	0.0	488	97.8	100.0	0.0	489	97.8	150.0	0.0
490	97.8	200.0	0.0	491	97.8	250.0	0.0	492	97.8	300.0	0.0
493	97.8	350.0	0.0	494	97.8	400.0	0.0	495	97.8	450.0	0.0
496	97.8	500.0	0.0	497	97.8	550.0	0.0	498	146.7	50.0	0.0
499	146.7	100.0	0.0	500	146.7	150.0	0.0	501	146.7	200.0	0.0
502	146.7	250.0	0.0	503	146.7	300.0	0.0	504	146.7	350.0	0.0
505	146.7	400.0	0.0	506	146.7	450.0	0.0	507	146.7	500.0	0.0
508	146.7	550.0	0.0	509	195.6	50.0	0.0	510	195.6	100.0	0.0
511	195.6	150.0	0.0	512	195.6	200.0	0.0	513	195.6	250.0	0.0
514	195.6	300.0	0.0	515	195.6	350.0	0.0	516	195.6	400.0	0.0
517	195.6	450.0	0.0	518	195.6	500.0	0.0	519	195.6	550.0	0.0
520	244.4	50.0	0.0	521	0.0	650.0	0.0	522	244.4	100.0	0.0
523	244.4	150.0	0.0	524	244.4	200.0	0.0	525	244.4	250.0	0.0
526	244.4	300.0	0.0	527	244.4	350.0	0.0	528	244.4	400.0	0.0
529	244.4	450.0	0.0	530	244.4	500.0	0.0	531	244.4	550.0	0.0
532	293.3	50.0	0.0	533	293.3	100.0	0.0	534	293.3	150.0	0.0
535	293.3	200.0	0.0	536	293.3	250.0	0.0	537	293.3	300.0	0.0
538	293.3	350.0	0.0	539	293.3	400.0	0.0	540	293.3	450.0	0.0
541	293.3	500.0	0.0	542	293.3	550.0	0.0	543	342.2	50.0	0.0
544	342.2	100.0	0.0	545	342.2	150.0	0.0	546	342.2	200.0	0.0
547	342.2	250.0	0.0	548	342.2	300.0	0.0	549	342.2	350.0	0.0
550	342.2	400.0	0.0	551	342.2	450.0	0.0	552	342.2	500.0	0.0
553	342.2	550.0	0.0	554	391.1	50.0	0.0	555	391.1	100.0	0.0
556	391.1	150.0	0.0	557	391.1	200.0	0.0	558	391.1	250.0	0.0
559	391.1	300.0	0.0	560	391.1	350.0	0.0	561	391.1	400.0	0.0
562	391.1	450.0	0.0	563	391.1	500.0	0.0	564	391.1	550.0	0.0
565	440.0	50.0	0.0	566	440.0	100.0	0.0	567	440.0	150.0	0.0

Viale Duca Alessandro n. 11 – 43123 Parma
Cell. 335 1403156 – E mail ing.concari@gmail.com
Sito web: studioaire.it – P.IVA 02561480340

568	440.0	200.0	0.0	569	440.0	250.0	0.0	570	440.0	300.0	0.0
571	440.0	350.0	0.0	572	440.0	400.0	0.0	573	440.0	450.0	0.0
574	440.0	500.0	0.0	575	440.0	550.0	0.0	576	488.9	50.0	0.0
577	488.9	100.0	0.0	578	488.9	150.0	0.0	579	488.9	200.0	0.0
580	488.9	250.0	0.0	581	488.9	300.0	0.0	582	488.9	350.0	0.0
583	488.9	400.0	0.0	584	488.9	450.0	0.0	585	488.9	500.0	0.0
586	488.9	550.0	0.0	587	537.8	50.0	0.0	588	537.8	100.0	0.0
589	537.8	150.0	0.0	590	537.8	200.0	0.0	591	537.8	250.0	0.0
592	537.8	300.0	0.0	593	537.8	350.0	0.0	594	537.8	400.0	0.0
595	537.8	450.0	0.0	596	537.8	500.0	0.0	597	537.8	550.0	0.0
598	586.7	50.0	0.0	599	586.7	100.0	0.0	600	586.7	150.0	0.0
601	586.7	200.0	0.0	602	586.7	250.0	0.0	603	586.7	300.0	0.0
604	586.7	350.0	0.0	605	586.7	400.0	0.0	606	586.7	450.0	0.0
607	586.7	500.0	0.0	608	586.7	550.0	0.0	609	635.6	50.0	0.0
610	635.6	100.0	0.0	611	635.6	150.0	0.0	612	635.6	200.0	0.0
613	635.6	250.0	0.0	614	635.6	300.0	0.0	615	635.6	350.0	0.0
616	635.6	400.0	0.0	617	635.6	450.0	0.0	618	635.6	500.0	0.0
619	635.6	550.0	0.0	620	684.4	50.0	0.0	621	684.4	100.0	0.0
622	684.4	150.0	0.0	623	684.4	200.0	0.0	624	684.4	250.0	0.0
625	684.4	300.0	0.0	626	684.4	350.0	0.0	627	684.4	400.0	0.0
628	684.4	450.0	0.0	629	684.4	500.0	0.0	630	684.4	550.0	0.0
631	733.3	50.0	0.0	632	733.3	100.0	0.0	633	733.3	150.0	0.0
634	733.3	200.0	0.0	635	733.3	250.0	0.0	636	733.3	300.0	0.0
637	733.3	350.0	0.0	638	733.3	400.0	0.0	639	733.3	450.0	0.0
640	733.3	500.0	0.0	641	733.3	550.0	0.0	642	782.2	50.0	0.0
643	782.2	100.0	0.0	644	782.2	150.0	0.0	645	782.2	200.0	0.0
646	782.2	250.0	0.0	647	782.2	300.0	0.0	648	782.2	350.0	0.0
649	782.2	400.0	0.0	650	782.2	450.0	0.0	651	782.2	500.0	0.0
652	782.2	550.0	0.0	653	831.1	50.0	0.0	654	831.1	100.0	0.0
655	831.1	150.0	0.0	656	831.1	200.0	0.0	657	831.1	250.0	0.0
658	831.1	300.0	0.0	659	831.1	350.0	0.0	660	831.1	400.0	0.0
661	831.1	450.0	0.0	662	831.1	500.0	0.0	663	831.1	550.0	0.0
664	930.0	50.0	0.0	665	930.0	0.0	0.0	666	930.0	100.0	0.0
667	930.0	150.0	0.0	668	930.0	200.0	0.0	669	930.0	250.0	0.0
670	930.0	300.0	0.0	671	930.0	350.0	0.0	672	930.0	400.0	0.0
673	930.0	450.0	0.0	674	930.0	500.0	0.0	675	930.0	550.0	0.0
676	930.0	600.0	0.0	677	-50.0	50.0	0.0	678	-50.0	0.0	0.0
679	-50.0	100.0	0.0	680	-50.0	150.0	0.0	681	-50.0	200.0	0.0
682	-50.0	250.0	0.0	683	-50.0	300.0	0.0	684	-50.0	350.0	0.0
685	-50.0	400.0	0.0	686	-50.0	450.0	0.0	687	-50.0	500.0	0.0
688	-50.0	550.0	0.0	689	-50.0	600.0	0.0	690	0.0	0.0	0.0
691	0.0	600.0	0.0	692	880.0	0.0	0.0	693	880.0	600.0	0.0
694	0.0	0.0	330.0								

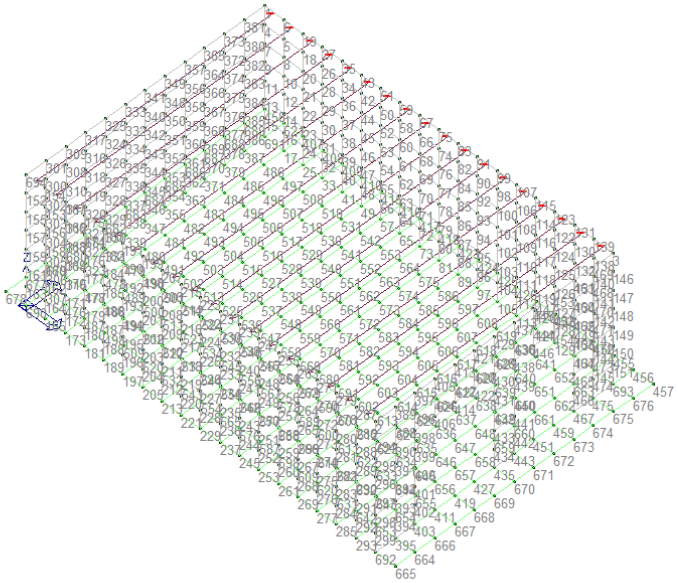

Numerazione nodi

MODELLAZIONE DELLA STRUTTURA: ELEMENTI TRAVE

SCALA ANTINCENDIO

Elem.	Note	Nodo I	Nodo J	Mat.	Sez.	Crit.	Rotaz.	Svincolo I	Svincolo J	Wink V	Wink O

Viale Duca Alessandro n. 11 – 43123 Parma
Cell. 335 1403156 – E mail ing.concari@gmail.com
Sito web: studioaire.it – P.IVA 02561480340

							gradi		daN/cm3	daN/cm3
1	Trave	13	4	12	1	1				
2	Pilas.	8	16	12	1	1	-90.00	000011		
3	Trave	23	38	12	3	1				
4	Pilas.	32	9	12	2	7				
5	Pilas.	7	21	12	1	1	90.00	000011		
6	Trave	37	14	12	3	1				
7	Trave	17	24	12	1	1	180.00			
8	Trave	24	25	12	1	1	180.00			
9	Trave	20	25	12	1	1			000011	
10	Trave	12	11	12	3	1				
11	Trave	19	22	12	1	1	180.00		000011	
12	Trave	25	22	12	1	1				
13	Trave	22	4	12	1	1	180.00			
14	Trave	16	17	12	1	10	180.00			
15	Trave	21	20	12	1	10				
16	Pilas.	5	14	12	2	9				
17	Pilas.	33	5	12	2	8				
18	Trave	27	23	12	1	1		000011		
19	Trave	26	27	12	1	1				
20	Trave	26	11	12	1	1		000011		
21	Trave	10	12	12	3	1				
22	Trave	36	12	12	1	1	180.00			
23	Trave	36	26	12	1	1		000011		
24	Trave	18	38	12	1	1				
25	Trave	27	18	12	1	1			000011	
26	Trave	23	19	12	1	11	180.00			
27	Trave	38	13	12	1	11				
28	Trave	31	37	12	3	1				
29	Trave	17	20	12	3	1				
30	Trave	15	31	12	3	1				
31	Trave	20	19	12	3	1				
32	Trave	37	29	12	1	1				
33	Trave	34	29	12	1	1	180.00			
34	Trave	31	34	12	1	1	180.00			
35	Trave	19	13	12	3	1				
36	Trave	13	5	12	3	1				
37	Trave	38	9	12	3	1				
38	Trave	12	31	12	1	11	180.00			
39	Trave	11	37	12	1	11				
40	Trave	28	1	12	1	1				
41	Trave	4	1	12	1	1	180.00			
42	Trave	11	23	12	3	1				
43	Trave	5	28	12	3	1				
44	Trave	14	35	12	3	1				
45	Trave	35	30	12	1	1				
46	Pilas.	2	3	12	2	8				
47	Pilas.	3	15	12	2	9				
48	Pilas.	6	10	12	2	7				
49	Trave	3	17	12	3	1				
50	Trave	29	30	12	1	1	180.00			

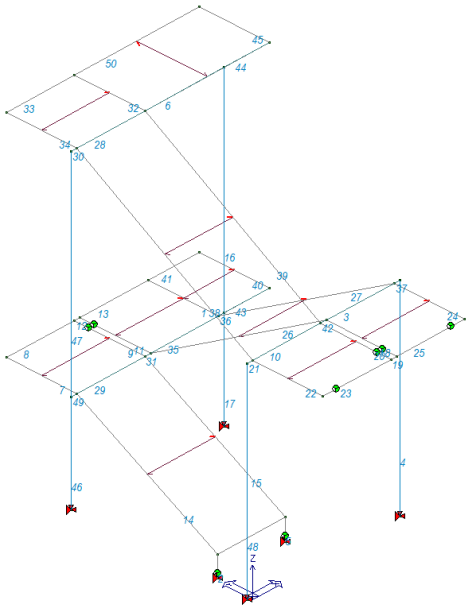

Numerazione elementi D2

Viale Duca Alessandro n. 11 – 43123 Parma
Cell. 335 1403156 – E mail ing.concari@gmail.com
Sito web: studioaire.it – P.IVA 02561480340

VANO ASCENSORE

Elem.	Note	Nodo I	Nodo J	Mat.	Sez.	Crit.	Rotaz.	Svincolo I	Svincolo J	Wink V	Wink O
							gradi			daN/cm3	daN/cm3
1	Pilas.	5	11	12	2	1					
2	Pilas.	6	12	12	2	1					
3	Pilas.	7	13	12	2	1					
4	Pilas.	8	14	12	2	1					
5	Trave	9	10	12	2	1					
6	Trave	10	11	12	2	1					
7	Trave	14	11	12	2	1					
8	Trave	14	13	12	2	1					
9	Trave	12	13	12	2	1					
10	Trave	9	12	12	2	1					
11	Trave	2	6	12	2	1					
12	Pilas.	18	3	12	2	1					
13	Pilas.	16	4	12	2	1					
14	Pilas.	19	5	12	2	1					
15	Pilas.	1	6	12	2	1					
16	Pilas.	15	7	12	2	1					
17	Pilas.	17	8	12	2	1					
18	Trave	3	4	12	2	1					
19	Trave	4	5	12	2	1					
20	Trave	8	5	12	2	1					
21	Trave	8	7	12	2	1					
22	Trave	6	7	12	2	1					
23	Trave	3	2	12	2	1					
24	Pilas.	3	9	12	2	1					
25	Pilas.	4	10	12	2	1					

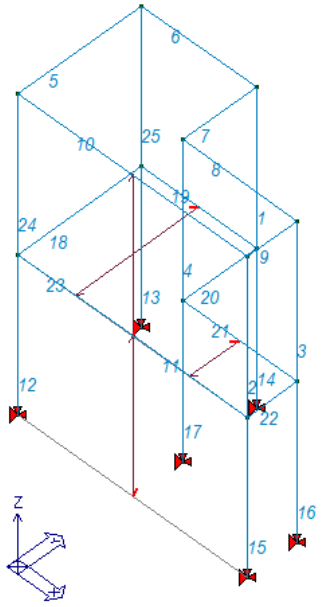

Numerazione elementi D2

LOCALE TECNICO

							gradi	daN/cm3
daN/cm3								
1	Trave	131	139	1	1	1		
2	Trave	279	287	1	1	1		
3	Trave	139	3	1	1	1		
4	Trave	287	2	1	1	1		
5	Trave	694	301	1	1	1		
6	Trave	1	6	1	1	1		
7	Trave	2	389	1	1	1		
8	Trave	694	154	1	1	1		
9	Trave	301	309	1	1	1		
10	Trave	6	19	1	1	1		
11	Trave	389	397	1	1	1		
12	Trave	154	167	1	1	1		
13	Trave	309	317	1	1	1		
14	Trave	19	27	1	1	1		
15	Trave	397	405	1	1	1		
16	Trave	167	175	1	1	1		

Viale Duca Alessandro n. 11 – 43123 Parma
Cell. 335 1403156 – E mail ing.concari@gmail.com
Sito web: studioaire.it – P.IVA 02561480340

17	Trave	317	325	1	1	1
18	Trave	27	35	1	1	1
19	Trave	405	413	1	1	1
20	Trave	175	183	1	1	1
21	Trave	325	333	1	1	1
22	Trave	35	43	1	1	1
23	Trave	413	421	1	1	1
24	Trave	183	191	1	1	1
25	Trave	333	341	1	1	1
26	Trave	43	51	1	1	1
27	Trave	421	429	1	1	1
28	Trave	191	199	1	1	1
29	Trave	341	349	1	1	1
30	Trave	51	59	1	1	1
31	Trave	429	437	1	1	1
32	Trave	199	207	1	1	1
33	Trave	349	357	1	1	1
34	Trave	59	67	1	1	1
35	Trave	437	445	1	1	1
36	Trave	207	215	1	1	1
37	Trave	357	365	1	1	1
38	Trave	67	75	1	1	1
39	Trave	445	453	1	1	1
40	Trave	215	223	1	1	1
41	Trave	365	373	1	1	1
42	Trave	75	83	1	1	1
43	Trave	453	461	1	1	1
44	Trave	223	231	1	1	1
45	Trave	373	381	1	1	1
46	Trave	83	91	1	1	1
47	Trave	461	469	1	1	1
48	Trave	231	239	1	1	1
49	Trave	381	1	1	1	1
50	Trave	91	99	1	1	1
51	Trave	469	3	1	1	1
52	Trave	239	247	1	1	1
53	Trave	99	107	1	1	1
54	Trave	247	255	1	1	1
55	Trave	107	115	1	1	1
56	Trave	255	263	1	1	1
57	Trave	115	123	1	1	1
58	Trave	263	271	1	1	1
59	Trave	123	131	1	1	1
60	Trave	271	279	1	1	1
61	Trave	398	406	1	1	1
62	Trave	406	414	1	1	1
63	Trave	414	422	1	1	1
64	Trave	422	430	1	1	1
65	Trave	438	446	1	1	1
66	Trave	446	454	1	1	1
67	Trave	454	462	1	1	1

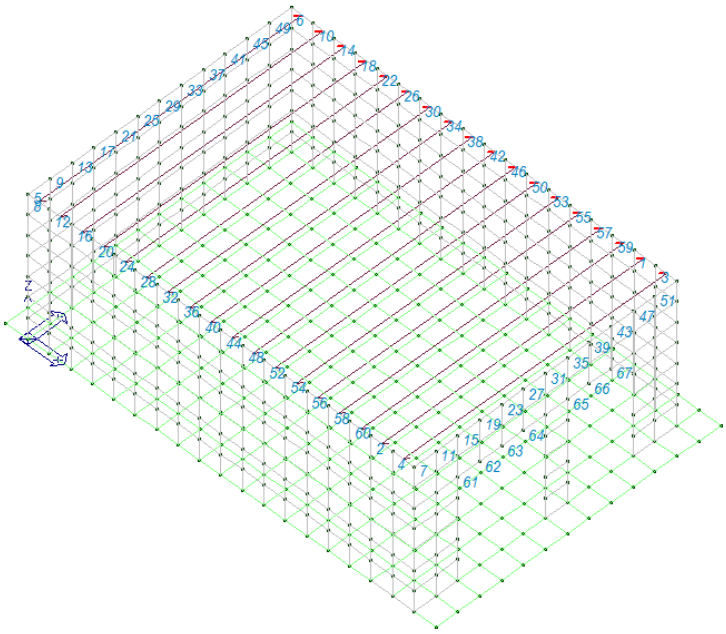

Numerazione elementi D2

Viale Duca Alessandro n. 11 – 43123 Parma
Cell. 335 1403156 – E mail ing.concari@gmail.com
Sito web: studioaire.it – P.IVA 02561480340

MODELLAZIONE DELLA STRUTTURA: ELEMENTI SHELL

MODELLO 2 SCALA ANTINCENDIO

Elem.	Note	Nodo I	Nodo J	Nodo K	Nodo L	Mat.	Crit.	Spessore	Svincolo	Wink V	Wink O	
									cm	daN/cm3	daN/cm3	
1		Guscio fond.	125	110	100	111	1	2	30.0		0.56	0.56
2		Guscio fond.	111	100	6	120	1	2	30.0		0.56	0.56
3		Guscio fond.	120	6	131	39	1	2	30.0		0.56	0.56
4		Guscio fond.	39	131	102	40	1	2	30.0		0.56	0.56
5		Guscio fond.	40	102	104	41	1	2	30.0		0.56	0.56
6		Guscio fond.	41	104	106	42	1	2	30.0		0.56	0.56
7		Guscio fond.	42	106	2	43	1	2	30.0		0.56	0.56
8		Guscio fond.	43	2	108	44	1	2	30.0		0.56	0.56
9		Guscio fond.	44	108	114	45	1	2	30.0		0.56	0.56
10		Guscio fond.	113	46	47	77	1	2	30.0		0.56	0.56
11		Guscio fond.	77	47	48	32	1	2	30.0		0.56	0.56
12		Guscio fond.	32	48	49	79	1	2	30.0		0.56	0.56
13		Guscio fond.	79	49	50	81	1	2	30.0		0.56	0.56
14		Guscio fond.	81	50	51	83	1	2	30.0		0.56	0.56
15		Guscio fond.	83	51	52	85	1	2	30.0		0.56	0.56
16		Guscio fond.	85	52	53	33	1	2	30.0		0.56	0.56
17		Guscio fond.	33	53	54	87	1	2	30.0		0.56	0.56
18		Guscio fond.	87	54	55	112	1	2	30.0		0.56	0.56
19		Guscio fond.	119	56	57	101	1	2	30.0		0.56	0.56
20		Guscio fond.	101	57	58	132	1	2	30.0		0.56	0.56
21		Guscio fond.	132	58	59	8	1	2	30.0		0.56	0.56
22		Guscio fond.	8	59	60	103	1	2	30.0		0.56	0.56
23		Guscio fond.	103	60	61	105	1	2	30.0		0.56	0.56
24		Guscio fond.	105	61	62	107	1	2	30.0		0.56	0.56
25		Guscio fond.	107	62	63	130	1	2	30.0		0.56	0.56
26		Guscio fond.	130	63	65	109	1	2	30.0		0.56	0.56
27		Guscio fond.	109	65	64	128	1	2	30.0		0.56	0.56
28		Guscio fond.	56	117	88	57	1	2	30.0		0.56	0.56
29		Guscio fond.	57	88	90	58	1	2	30.0		0.56	0.56
30		Guscio fond.	58	90	7	59	1	2	30.0		0.56	0.56
31		Guscio fond.	59	7	92	60	1	2	30.0		0.56	0.56
32		Guscio fond.	60	92	94	61	1	2	30.0		0.56	0.56
33		Guscio fond.	61	94	96	62	1	2	30.0		0.56	0.56
34		Guscio fond.	62	96	124	63	1	2	30.0		0.56	0.56
35		Guscio fond.	63	124	98	65	1	2	30.0		0.56	0.56
36		Guscio fond.	65	98	129	64	1	2	30.0		0.56	0.56
37		Guscio fond.	66	116	76	67	1	2	30.0		0.56	0.56
38		Guscio fond.	67	76	115	68	1	2	30.0		0.56	0.56
39		Guscio fond.	68	115	78	69	1	2	30.0		0.56	0.56
40		Guscio fond.	69	78	80	70	1	2	30.0		0.56	0.56
41		Guscio fond.	70	80	82	71	1	2	30.0		0.56	0.56
42		Guscio fond.	71	82	84	75	1	2	30.0		0.56	0.56
43		Guscio fond.	118	66	67	89	1	2	30.0		0.56	0.56
44		Guscio fond.	89	67	68	91	1	2	30.0		0.56	0.56
45		Guscio fond.	91	68	69	121	1	2	30.0		0.56	0.56
46		Guscio fond.	121	69	70	93	1	2	30.0		0.56	0.56
47		Guscio fond.	93	70	71	95	1	2	30.0		0.56	0.56
48		Guscio fond.	95	71	75	97	1	2	30.0		0.56	0.56
49		Guscio fond.	74	122	86	73	1	2	30.0		0.56	0.56
50		Guscio fond.	73	86	126	72	1	2	30.0		0.56	0.56
51		Guscio fond.	123	74	73	99	1	2	30.0		0.56	0.56
52		Guscio fond.	99	73	72	127	1	2	30.0		0.56	0.56
53		Guscio fond.	75	84	122	74	1	2	30.0		0.56	0.56
54		Guscio fond.	97	75	74	123	1	2	30.0		0.56	0.56
55		Guscio fond.	116	113	77	76	1	2	30.0		0.56	0.56
56		Guscio fond.	76	77	32	115	1	2	30.0		0.56	0.56
57		Guscio fond.	115	32	79	78	1	2	30.0		0.56	0.56
58		Guscio fond.	78	79	81	80	1	2	30.0		0.56	0.56
59		Guscio fond.	80	81	83	82	1	2	30.0		0.56	0.56
60		Guscio fond.	82	83	85	84	1	2	30.0		0.56	0.56
61		Guscio fond.	84	85	33	122	1	2	30.0		0.56	0.56
62		Guscio fond.	122	33	87	86	1	2	30.0		0.56	0.56
63		Guscio fond.	86	87	112	126	1	2	30.0		0.56	0.56
64		Guscio fond.	117	118	89	88	1	2	30.0		0.56	0.56
65		Guscio fond.	88	89	91	90	1	2	30.0		0.56	0.56
66		Guscio fond.	90	91	121	7	1	2	30.0		0.56	0.56
67		Guscio fond.	7	121	93	92	1	2	30.0		0.56	0.56
68		Guscio fond.	92	93	95	94	1	2	30.0		0.56	0.56
69		Guscio fond.	94	95	97	96	1	2	30.0		0.56	0.56
70		Guscio fond.	96	97	123	124	1	2	30.0		0.56	0.56
71		Guscio fond.	124	123	99	98	1	2	30.0		0.56	0.56
72		Guscio fond.	98	99	127	129	1	2	30.0		0.56	0.56
73		Guscio fond.	110	119	101	100	1	2	30.0		0.56	0.56
74		Guscio fond.	100	101	132	6	1	2	30.0		0.56	0.56
75		Guscio fond.	6	132	8	131	1	2	30.0		0.56	0.56
76		Guscio fond.	131	8	103	102	1	2	30.0		0.56	0.56
77		Guscio fond.	102	103	105	104	1	2	30.0		0.56	0.56
78		Guscio fond.	104	105	107	106	1	2	30.0		0.56	0.56

Viale Duca Alessandro n. 11 – 43123 Parma
Cell. 335 1403156 – E mail ing.concari@gmail.com
Sito web: studioaire.it – P.IVA 02561480340

79	Guscio fond.	106	107	130	2	1	2	30.0	0.56	0.56
80	Guscio fond.	2	130	109	108	1	2	30.0	0.56	0.56
81	Guscio fond.	108	109	128	114	1	2	30.0	0.56	0.56

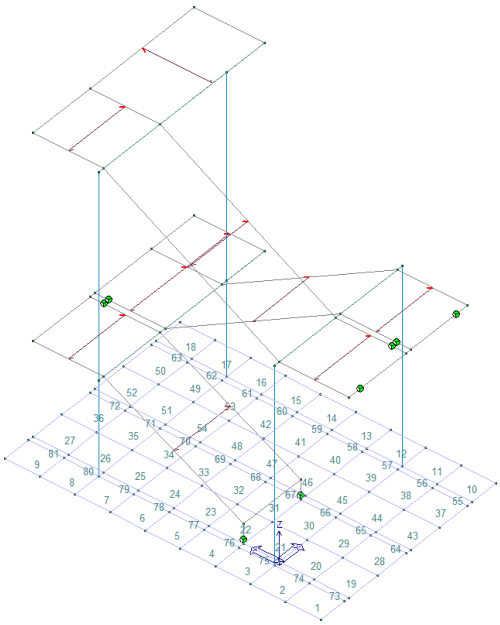

Numerazione elementi D3

MODELLO 2 VANO ASCENSORE

Elem.	Note	Nodo I	Nodo J	Nodo K	Nodo L	Mat.	Crit.	Spessore	Svincolo	Wink V	Wink O
								cm		daN/cm3	daN/cm3
1	Setto	313	306	305	312	1	1	25.0			
2	Setto	314	307	306	313	1	1	25.0			
3	Setto	50	49	307	314	1	1	25.0			
4	Setto	309	316	315	308	1	1	25.0			
5	Setto	308	315	317	310	1	1	25.0			
6	Setto	310	317	318	311	1	1	25.0			
7	Setto	311	318	319	312	1	1	25.0			
8	Setto	312	319	320	313	1	1	25.0			
9	Setto	313	320	321	314	1	1	25.0			
10	Setto	314	321	56	50	1	1	25.0			
11	Setto	316	323	322	315	1	1	25.0			
12	Setto	315	322	324	317	1	1	25.0			
13	Setto	317	324	325	318	1	1	25.0			
14	Setto	318	325	326	319	1	1	25.0			
15	Setto	319	326	327	320	1	1	25.0			
16	Setto	320	327	328	321	1	1	25.0			
17	Setto	321	328	62	56	1	1	25.0			
18	Setto	323	330	329	322	1	1	25.0			
19	Setto	322	329	81	324	1	1	25.0			
20	Setto	324	81	82	325	1	1	25.0			
21	Setto	325	82	83	326	1	1	25.0			
22	Setto	326	83	84	327	1	1	25.0			
23	Setto	327	84	85	328	1	1	25.0			
24	Setto	328	85	68	62	1	1	25.0			
25	Setto	330	87	86	329	1	1	25.0			
26	Setto	329	86	88	81	1	1	25.0			
27	Setto	81	88	89	82	1	1	25.0			
28	Setto	82	89	90	83	1	1	25.0			
29	Setto	83	90	1	84	1	1	25.0			
30	Setto	84	1	2	85	1	1	25.0			
31	Setto	85	2	74	68	1	1	25.0			
32	Setto	87	282	281	86	1	1	25.0			
33	Setto	86	281	283	88	1	1	25.0			
34	Guscio fond.	19	20	21	18	1	2	40.0		0.52	0.35
35	Guscio fond.	22	23	20	19	1	2	40.0		0.52	0.35
36	Guscio fond.	24	25	23	22	1	2	40.0		0.52	0.35
37	Guscio fond.	26	27	25	24	1	2	40.0		0.52	0.35
38	Guscio fond.	15	28	27	26	1	2	40.0		0.52	0.35
39	Guscio fond.	20	29	30	21	1	2	40.0		0.52	0.35
40	Guscio fond.	23	31	29	20	1	2	40.0		0.52	0.35
41	Guscio fond.	25	32	31	23	1	2	40.0		0.52	0.35
42	Guscio fond.	27	33	32	25	1	2	40.0		0.52	0.35

Viale Duca Alessandro n. 11 – 43123 Parma
Cell. 335 1403156 – E mail ing.concari@gmail.com
Sito web: studioaire.it – P.IVA 02561480340

Elem.	Note	Nodo I	Nodo J	Nodo K	Nodo L	Mat.	Crit.	Spessore	Svincolo	Wink V	Wink O
43	Guscio fond.	28	34	33	27	1	2	40.0		0.52	0.35
44	Guscio fond.	29	35	36	30	1	2	40.0		0.52	0.35
45	Guscio fond.	31	37	35	29	1	2	40.0		0.52	0.35
46	Guscio fond.	32	38	37	31	1	2	40.0		0.52	0.35
47	Guscio fond.	33	39	38	32	1	2	40.0		0.52	0.35
48	Guscio fond.	34	40	39	33	1	2	40.0		0.52	0.35
49	Guscio fond.	35	41	42	36	1	2	40.0		0.52	0.35
50	Guscio fond.	37	43	41	35	1	2	40.0		0.52	0.35
51	Guscio fond.	38	44	43	37	1	2	40.0		0.52	0.35
52	Guscio fond.	39	45	44	38	1	2	40.0		0.52	0.35
53	Guscio fond.	40	46	45	39	1	2	40.0		0.52	0.35
54	Guscio fond.	41	47	48	42	1	2	40.0		0.52	0.35
55	Guscio fond.	43	49	47	41	1	2	40.0		0.52	0.35
56	Guscio fond.	44	50	49	43	1	2	40.0		0.52	0.35
57	Guscio fond.	45	51	50	44	1	2	40.0		0.52	0.35
58	Guscio fond.	46	52	51	45	1	2	40.0		0.52	0.35
59	Guscio fond.	47	53	54	48	1	2	40.0		0.52	0.35
60	Guscio fond.	49	55	53	47	1	2	40.0		0.52	0.35
61	Guscio fond.	50	56	55	49	1	2	40.0		0.52	0.35
62	Guscio fond.	51	57	56	50	1	2	40.0		0.52	0.35
63	Guscio fond.	52	58	57	51	1	2	40.0		0.52	0.35
64	Guscio fond.	53	59	60	54	1	2	40.0		0.52	0.35
65	Guscio fond.	55	61	59	53	1	2	40.0		0.52	0.35
66	Guscio fond.	56	62	61	55	1	2	40.0		0.52	0.35
67	Guscio fond.	57	63	62	56	1	2	40.0		0.52	0.35
68	Guscio fond.	58	64	63	57	1	2	40.0		0.52	0.35
69	Guscio fond.	59	65	66	60	1	2	40.0		0.52	0.35
70	Guscio fond.	61	67	65	59	1	2	40.0		0.52	0.35
71	Guscio fond.	62	68	67	61	1	2	40.0		0.52	0.35
72	Guscio fond.	63	69	68	62	1	2	40.0		0.52	0.35
73	Guscio fond.	64	70	69	63	1	2	40.0		0.52	0.35
74	Guscio fond.	65	71	72	66	1	2	40.0		0.52	0.35
75	Guscio fond.	67	73	71	65	1	2	40.0		0.52	0.35
76	Guscio fond.	68	74	73	67	1	2	40.0		0.52	0.35
77	Guscio fond.	69	75	74	68	1	2	40.0		0.52	0.35
78	Guscio fond.	70	76	75	69	1	2	40.0		0.52	0.35
79	Guscio fond.	71	77	17	72	1	2	40.0		0.52	0.35
80	Guscio fond.	73	78	77	71	1	2	40.0		0.52	0.35
81	Guscio fond.	74	79	78	73	1	2	40.0		0.52	0.35
82	Guscio fond.	75	80	79	74	1	2	40.0		0.52	0.35
83	Guscio fond.	76	16	80	75	1	2	40.0		0.52	0.35
84	Setto	303	296	294	301	1	1	25.0			
85	Setto	88	283	284	89	1	1	25.0			
86	Setto	89	284	285	90	1	1	25.0			
87	Setto	90	285	286	1	1	1	25.0			
88	Setto	1	286	287	2	1	1	25.0			
89	Setto	2	287	79	74	1	1	25.0			
90	Setto	308	301	302	309	1	1	25.0			
91	Setto	310	303	301	308	1	1	25.0			
92	Setto	311	304	303	310	1	1	25.0			
93	Setto	312	305	304	311	1	1	25.0			
94	Setto	15	26	93	92	1	1	25.0			
95	Setto	92	93	95	94	1	1	25.0			
96	Setto	94	95	97	96	1	1	25.0			
97	Setto	96	97	99	98	1	1	25.0			
98	Setto	98	99	101	100	1	1	25.0			
99	Setto	100	101	103	102	1	1	25.0			
100	Setto	102	103	105	104	1	1	25.0			
101	Setto	26	24	106	93	1	1	25.0			
102	Setto	93	106	107	95	1	1	25.0			
103	Setto	95	107	108	97	1	1	25.0			
104	Setto	97	108	109	99	1	1	25.0			
105	Setto	99	109	110	101	1	1	25.0			
106	Setto	101	110	111	103	1	1	25.0			
107	Setto	103	111	112	105	1	1	25.0			
108	Setto	24	22	113	106	1	1	25.0			
109	Setto	106	113	114	107	1	1	25.0			
110	Setto	107	114	115	108	1	1	25.0			
111	Setto	108	115	116	109	1	1	25.0			
112	Setto	109	116	117	110	1	1	25.0			
113	Setto	110	117	118	111	1	1	25.0			
114	Setto	111	118	119	112	1	1	25.0			
115	Setto	22	19	120	113	1	1	25.0			
116	Setto	113	120	121	114	1	1	25.0			
117	Setto	114	121	122	115	1	1	25.0			
118	Setto	115	122	123	116	1	1	25.0			
119	Setto	116	123	124	117	1	1	25.0			
120	Setto	117	124	125	118	1	1	25.0			
121	Setto	118	125	126	119	1	1	25.0			
122	Setto	19	18	127	120	1	1	25.0			
123	Setto	120	127	128	121	1	1	25.0			
124	Setto	121	128	129	122	1	1	25.0			
125	Setto	122	129	130	123	1	1	25.0			
126	Setto	123	130	131	124	1	1	25.0			
127	Setto	124	131	132	125	1	1	25.0			
128	Setto	125	132	133	126	1	1	25.0			
129	Setto	133	135	134	132	1	1	25.0			
130	Setto	132	134	136	131	1	1	25.0			
131	Setto	131	136	137	130	1	1	25.0			
132	Setto	130	137	138	129	1	1	25.0			
133	Setto	129	138	139	128	1	1	25.0			
134	Setto	128	139	140	127	1	1	25.0			
135	Setto	127	140	21	18	1	1	25.0			

Viale Duca Alessandro n. 11 – 43123 Parma
Cell. 335 1403156 – E mail ing.concari@gmail.com
Sito web: studioaire.it – P.IVA 02561480340

Elem.	Note	Nodo I	Nodo J	Nodo K	Nodo L	Mat.	Crit.	Spessore	Svincolo	Wink V	Wink O
136	Setto	135	142	141	134	1	1	25.0			
137	Setto	134	141	143	136	1	1	25.0			
138	Setto	136	143	144	137	1	1	25.0			
139	Setto	137	144	145	138	1	1	25.0			
140	Setto	138	145	146	139	1	1	25.0			
141	Setto	139	146	147	140	1	1	25.0			
142	Setto	140	147	30	21	1	1	25.0			
143	Setto	142	149	148	141	1	1	25.0			
144	Setto	141	148	150	143	1	1	25.0			
145	Setto	79	78	151	287	1	1	25.0			
146	Setto	288	152	153	289	1	1	25.0			
147	Setto	290	154	152	288	1	1	25.0			
148	Setto	291	158	154	290	1	1	25.0			
149	Setto	292	159	158	291	1	1	25.0			
150	Setto	149	156	155	148	1	1	25.0			
151	Setto	148	155	157	150	1	1	25.0			
152	Setto	293	160	159	292	1	1	25.0			
153	Setto	151	161	160	293	1	1	25.0			
154	Setto	78	77	161	151	1	1	25.0			
155	Setto	152	197	198	153	1	1	25.0			
156	Setto	154	199	197	152	1	1	25.0			
157	Setto	156	163	162	155	1	1	25.0			
158	Setto	155	162	164	157	1	1	25.0			
159	Setto	158	200	199	154	1	1	25.0			
160	Setto	159	201	200	158	1	1	25.0			
161	Setto	160	202	201	159	1	1	25.0			
162	Setto	161	203	202	160	1	1	25.0			
163	Setto	77	17	203	161	1	1	25.0			
164	Setto	163	170	169	162	1	1	25.0			
165	Setto	162	169	171	164	1	1	25.0			
166	Setto	164	171	172	165	1	1	25.0			
167	Setto	165	172	173	166	1	1	25.0			
168	Setto	166	173	174	167	1	1	25.0			
169	Setto	167	174	175	168	1	1	25.0			
170	Setto	168	175	54	48	1	1	25.0			
171	Setto	170	177	176	169	1	1	25.0			
172	Setto	169	176	178	171	1	1	25.0			
173	Setto	171	178	179	172	1	1	25.0			
174	Setto	172	179	180	173	1	1	25.0			
175	Setto	173	180	181	174	1	1	25.0			
176	Setto	174	181	182	175	1	1	25.0			
177	Setto	175	182	60	54	1	1	25.0			
178	Setto	177	184	183	176	1	1	25.0			
179	Setto	176	183	185	178	1	1	25.0			
180	Setto	178	185	186	179	1	1	25.0			
181	Setto	179	186	187	180	1	1	25.0			
182	Setto	180	187	188	181	1	1	25.0			
183	Setto	181	188	189	182	1	1	25.0			
184	Setto	182	189	66	60	1	1	25.0			
185	Setto	184	191	190	183	1	1	25.0			
186	Setto	183	190	192	185	1	1	25.0			
187	Setto	185	192	193	186	1	1	25.0			
188	Setto	186	193	194	187	1	1	25.0			
189	Setto	187	194	195	188	1	1	25.0			
190	Setto	188	195	196	189	1	1	25.0			
191	Setto	189	196	72	66	1	1	25.0			
192	Setto	191	198	197	190	1	1	25.0			
193	Setto	190	197	199	192	1	1	25.0			
194	Setto	192	199	200	193	1	1	25.0			
195	Setto	193	200	201	194	1	1	25.0			
196	Setto	194	201	202	195	1	1	25.0			
197	Setto	195	202	203	196	1	1	25.0			
198	Setto	196	203	17	72	1	1	25.0			
199	Setto	104	205	204	102	1	1	25.0			
200	Setto	102	204	206	100	1	1	25.0			
201	Setto	100	206	207	98	1	1	25.0			
202	Setto	98	207	208	96	1	1	25.0			
203	Setto	96	208	209	94	1	1	25.0			
204	Setto	94	209	210	92	1	1	25.0			
205	Setto	92	210	28	15	1	1	25.0			
206	Setto	205	212	211	204	1	1	25.0			
207	Setto	204	211	213	206	1	1	25.0			
208	Setto	206	213	214	207	1	1	25.0			
209	Setto	207	214	215	208	1	1	25.0			
210	Setto	208	215	216	209	1	1	25.0			
211	Setto	209	216	217	210	1	1	25.0			
212	Setto	210	217	34	28	1	1	25.0			
213	Setto	212	219	218	211	1	1	25.0			
214	Setto	211	218	220	213	1	1	25.0			
215	Setto	213	220	221	214	1	1	25.0			
216	Setto	214	221	222	215	1	1	25.0			
217	Setto	215	222	223	216	1	1	25.0			
218	Setto	216	223	224	217	1	1	25.0			
219	Setto	217	224	40	34	1	1	25.0			
220	Setto	219	226	225	218	1	1	25.0			
221	Setto	218	225	227	220	1	1	25.0			
222	Setto	220	227	228	221	1	1	25.0			
223	Setto	221	228	229	222	1	1	25.0			
224	Setto	222	229	230	223	1	1	25.0			
225	Setto	223	230	231	224	1	1	25.0			
226	Setto	224	231	46	40	1	1	25.0			
227	Setto	226	233	232	225	1	1	25.0			
228	Setto	225	232	234	227	1	1	25.0			

Viale Duca Alessandro n. 11 – 43123 Parma
Cell. 335 1403156 – E mail ing.concari@gmail.com
Sito web: studioaire.it – P.IVA 02561480340

Elem.	Note	Nodo I	Nodo J	Nodo K	Nodo L	Mat.	Crit.	Spessore	Svincolo	Wink V	Wink O
229	Setto	227	234	235	228	1	1	25.0			
230	Setto	228	235	236	229	1	1	25.0			
231	Setto	229	236	237	230	1	1	25.0			
232	Setto	230	237	238	231	1	1	25.0			
233	Setto	231	238	52	46	1	1	25.0			
234	Setto	233	240	239	232	1	1	25.0			
235	Setto	232	239	241	234	1	1	25.0			
236	Setto	234	241	242	235	1	1	25.0			
237	Setto	235	242	243	236	1	1	25.0			
238	Setto	236	243	244	237	1	1	25.0			
239	Setto	237	244	245	238	1	1	25.0			
240	Setto	238	245	58	52	1	1	25.0			
241	Setto	240	247	246	239	1	1	25.0			
242	Setto	239	246	248	241	1	1	25.0			
243	Setto	241	248	249	242	1	1	25.0			
244	Setto	242	249	250	243	1	1	25.0			
245	Setto	243	250	251	244	1	1	25.0			
246	Setto	244	251	252	245	1	1	25.0			
247	Setto	245	252	64	58	1	1	25.0			
248	Setto	247	254	253	246	1	1	25.0			
249	Setto	246	253	255	248	1	1	25.0			
250	Setto	248	255	256	249	1	1	25.0			
251	Setto	249	256	257	250	1	1	25.0			
252	Setto	250	257	258	251	1	1	25.0			
253	Setto	251	258	259	252	1	1	25.0			
254	Setto	252	259	70	64	1	1	25.0			
255	Setto	254	261	260	253	1	1	25.0			
256	Setto	253	260	262	255	1	1	25.0			
257	Setto	255	262	263	256	1	1	25.0			
258	Setto	256	263	264	257	1	1	25.0			
259	Setto	257	264	265	258	1	1	25.0			
260	Setto	258	265	266	259	1	1	25.0			
261	Setto	259	266	76	70	1	1	25.0			
262	Setto	261	268	267	260	1	1	25.0			
263	Setto	260	267	269	262	1	1	25.0			
264	Setto	262	269	270	263	1	1	25.0			
265	Setto	263	270	271	264	1	1	25.0			
266	Setto	264	271	272	265	1	1	25.0			
267	Setto	265	272	273	266	1	1	25.0			
268	Setto	266	273	16	76	1	1	25.0			
269	Setto	267	274	275	268	1	1	25.0			
270	Setto	269	276	274	267	1	1	25.0			
271	Setto	270	277	276	269	1	1	25.0			
272	Setto	271	278	277	270	1	1	25.0			
273	Setto	272	279	278	271	1	1	25.0			
274	Setto	273	280	279	272	1	1	25.0			
275	Setto	16	80	280	273	1	1	25.0			
276	Setto	274	281	282	275	1	1	25.0			
277	Setto	276	283	281	274	1	1	25.0			
278	Setto	277	284	283	276	1	1	25.0			
279	Setto	278	285	284	277	1	1	25.0			
280	Setto	279	286	285	278	1	1	25.0			
281	Setto	280	287	286	279	1	1	25.0			
282	Setto	80	79	287	280	1	1	25.0			
283	Setto	281	288	289	282	1	1	25.0			
284	Setto	283	290	288	281	1	1	25.0			
285	Setto	284	291	290	283	1	1	25.0			
286	Setto	285	292	291	284	1	1	25.0			
287	Setto	286	293	292	285	1	1	25.0			
288	Setto	287	151	293	286	1	1	25.0			
289	Setto	294	162	163	295	1	1	25.0			
290	Setto	296	164	162	294	1	1	25.0			
291	Setto	297	165	164	296	1	1	25.0			
292	Setto	298	166	165	297	1	1	25.0			
293	Setto	299	167	166	298	1	1	25.0			
294	Setto	300	168	167	299	1	1	25.0			
295	Setto	47	48	168	300	1	1	25.0			
296	Setto	301	294	295	302	1	1	25.0			

Viale Duca Alessandro n. 11 – 43123 Parma
Cell. 335 1403156 – E mail ing.concari@gmail.com
Sito web: studioaire.it – P.IVA 02561480340

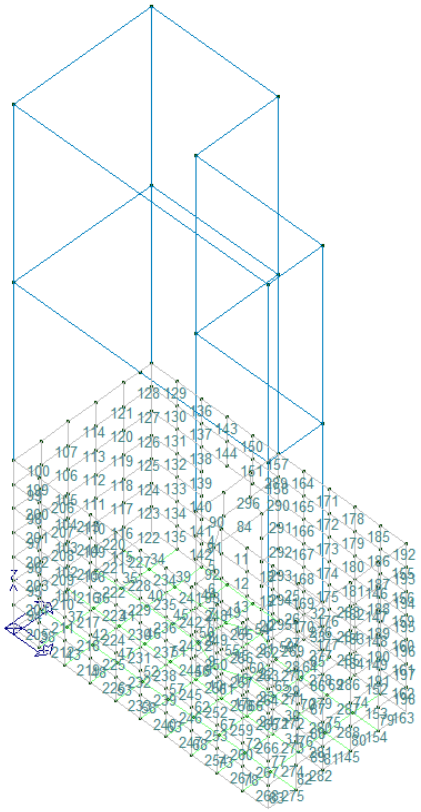

Numerazione elementi D3

MODELLO LOCALE TECNICO

Elem.Note	Nodo I	Nodo J	Nodo K	Nodo L	Mat.	Crit.	Spessore	Svincolo cm	Wink V	Wink O daN/cm3	
daN/cm3											
1	Guscio fond.	285	293	653	642	1	2	40.0		0.27	0.18
2	Guscio fond.	642	653	654	643	1	2	40.0		0.27	0.18
3	Guscio fond.	643	654	655	644	1	2	40.0		0.27	0.18
4	Guscio fond.	644	655	656	645	1	2	40.0		0.27	0.18
5	Guscio fond.	645	656	657	646	1	2	40.0		0.27	0.18
6	Guscio fond.	646	657	658	647	1	2	40.0		0.27	0.18
7	Guscio fond.	647	658	659	648	1	2	40.0		0.27	0.18
8	Guscio fond.	648	659	660	649	1	2	40.0		0.27	0.18
9	Guscio fond.	649	660	661	650	1	2	40.0		0.27	0.18
10	Guscio fond.	650	661	662	651	1	2	40.0		0.27	0.18
11	Guscio fond.	651	662	663	652	1	2	40.0		0.27	0.18
12	Guscio fond.	652	663	145	137	1	2	40.0		0.27	0.18
13	Guscio fond.	293	692	395	653	1	2	40.0		0.27	0.18
14	Guscio fond.	653	395	403	654	1	2	40.0		0.27	0.18
15	Guscio fond.	654	403	411	655	1	2	40.0		0.27	0.18
16	Guscio fond.	655	411	419	656	1	2	40.0		0.27	0.18
17	Guscio fond.	656	419	427	657	1	2	40.0		0.27	0.18
18	Guscio fond.	657	427	435	658	1	2	40.0		0.27	0.18
19	Guscio fond.	658	435	443	659	1	2	40.0		0.27	0.18
20	Guscio fond.	659	443	451	660	1	2	40.0		0.27	0.18
21	Guscio fond.	660	451	459	661	1	2	40.0		0.27	0.18
22	Guscio fond.	661	459	467	662	1	2	40.0		0.27	0.18
23	Guscio fond.	662	467	475	663	1	2	40.0		0.27	0.18
24	Guscio fond.	663	475	693	145	1	2	40.0		0.27	0.18
25	Guscio fond.	692	665	664	395	1	2	40.0		0.27	0.18
26	Guscio fond.	395	664	666	403	1	2	40.0		0.27	0.18
27	Guscio fond.	403	666	667	411	1	2	40.0		0.27	0.18
28	Guscio fond.	411	667	668	419	1	2	40.0		0.27	0.18
29	Guscio fond.	419	668	669	427	1	2	40.0		0.27	0.18
30	Guscio fond.	427	669	670	435	1	2	40.0		0.27	0.18
31	Guscio fond.	435	670	671	443	1	2	40.0		0.27	0.18
32	Guscio fond.	443	671	672	451	1	2	40.0		0.27	0.18
33	Guscio fond.	451	672	673	459	1	2	40.0		0.27	0.18
34	Setto	1	6	5	4	1	1	25.0			
35	Setto	4	5	8	7	1	1	25.0			
36	Setto	7	8	10	9	1	1	25.0			

Viale Duca Alessandro n. 11 – 43123 Parma
Cell. 335 1403156 – E mail ing.concari@gmail.com
Sito web: studioaire.it – P.IVA 02561480340

37	Setto	9	10	12	11	1	1	25.0
38	Setto	11	12	14	13	1	1	25.0
39	Setto	13	14	16	15	1	1	25.0
40	Setto	15	16	17	691	1	1	25.0
41	Setto	6	19	18	5	1	1	25.0
42	Setto	5	18	20	8	1	1	25.0
43	Setto	8	20	21	10	1	1	25.0
44	Setto	10	21	22	12	1	1	25.0
45	Setto	12	22	23	14	1	1	25.0
46	Setto	14	23	24	16	1	1	25.0
47	Setto	16	24	25	17	1	1	25.0
48	Setto	19	27	26	18	1	1	25.0
49	Setto	18	26	28	20	1	1	25.0
50	Setto	20	28	29	21	1	1	25.0
51	Setto	21	29	30	22	1	1	25.0
52	Setto	22	30	31	23	1	1	25.0
53	Setto	23	31	32	24	1	1	25.0
54	Setto	24	32	33	25	1	1	25.0
55	Setto	27	35	34	26	1	1	25.0
56	Setto	26	34	36	28	1	1	25.0
57	Setto	28	36	37	29	1	1	25.0
58	Setto	29	37	38	30	1	1	25.0
59	Setto	30	38	39	31	1	1	25.0
60	Setto	31	39	40	32	1	1	25.0
61	Setto	32	40	41	33	1	1	25.0
62	Setto	35	43	42	34	1	1	25.0
63	Setto	34	42	44	36	1	1	25.0
64	Setto	36	44	45	37	1	1	25.0
65	Setto	37	45	46	38	1	1	25.0
66	Setto	38	46	47	39	1	1	25.0
67	Setto	39	47	48	40	1	1	25.0
68	Setto	40	48	49	41	1	1	25.0
69	Setto	43	51	50	42	1	1	25.0
70	Setto	42	50	52	44	1	1	25.0
71	Setto	44	52	53	45	1	1	25.0
72	Setto	45	53	54	46	1	1	25.0
73	Setto	46	54	55	47	1	1	25.0
74	Setto	47	55	56	48	1	1	25.0
75	Setto	48	56	57	49	1	1	25.0
76	Setto	51	59	58	50	1	1	25.0
77	Setto	50	58	60	52	1	1	25.0
78	Setto	52	60	61	53	1	1	25.0
79	Setto	53	61	62	54	1	1	25.0
80	Setto	54	62	63	55	1	1	25.0
81	Setto	55	63	64	56	1	1	25.0
82	Setto	56	64	65	57	1	1	25.0
83	Setto	59	67	66	58	1	1	25.0
84	Setto	58	66	68	60	1	1	25.0
85	Setto	60	68	69	61	1	1	25.0
86	Setto	61	69	70	62	1	1	25.0
87	Setto	62	70	71	63	1	1	25.0
88	Setto	63	71	72	64	1	1	25.0
89	Setto	64	72	73	65	1	1	25.0
90	Setto	67	75	74	66	1	1	25.0
91	Setto	66	74	76	68	1	1	25.0
92	Setto	68	76	77	69	1	1	25.0
93	Setto	69	77	78	70	1	1	25.0
94	Setto	70	78	79	71	1	1	25.0
95	Setto	71	79	80	72	1	1	25.0
96	Setto	72	80	81	73	1	1	25.0
97	Setto	75	83	82	74	1	1	25.0
98	Setto	74	82	84	76	1	1	25.0
99	Setto	76	84	85	77	1	1	25.0
100	Setto	77	85	86	78	1	1	25.0
101	Setto	78	86	87	79	1	1	25.0
102	Setto	79	87	88	80	1	1	25.0
103	Setto	80	88	89	81	1	1	25.0
104	Setto	83	91	90	82	1	1	25.0
105	Setto	82	90	92	84	1	1	25.0
106	Setto	84	92	93	85	1	1	25.0
107	Setto	85	93	94	86	1	1	25.0
108	Setto	86	94	95	87	1	1	25.0
109	Setto	87	95	96	88	1	1	25.0
110	Setto	88	96	97	89	1	1	25.0
111	Setto	91	99	98	90	1	1	25.0
112	Setto	90	98	100	92	1	1	25.0
113	Setto	92	100	101	93	1	1	25.0
114	Setto	93	101	102	94	1	1	25.0
115	Setto	94	102	103	95	1	1	25.0
116	Setto	95	103	104	96	1	1	25.0
117	Setto	96	104	105	97	1	1	25.0
118	Setto	99	107	106	98	1	1	25.0
119	Setto	98	106	108	100	1	1	25.0
120	Setto	100	108	109	101	1	1	25.0
121	Setto	101	109	110	102	1	1	25.0
122	Setto	102	110	111	103	1	1	25.0
123	Setto	103	111	112	104	1	1	25.0
124	Setto	104	112	113	105	1	1	25.0
125	Setto	107	115	114	106	1	1	25.0
126	Setto	106	114	116	108	1	1	25.0
127	Setto	108	116	117	109	1	1	25.0
128	Setto	109	117	118	110	1	1	25.0
129	Setto	110	118	119	111	1	1	25.0
130	Setto	111	119	120	112	1	1	25.0
131	Setto	112	120	121	113	1	1	25.0
132	Setto	115	123	122	114	1	1	25.0
133	Setto	114	122	124	116	1	1	25.0
134	Setto	116	124	125	117	1	1	25.0

Viale Duca Alessandro n. 11 – 43123 Parma
Cell. 335 1403156 – E mail ing.concari@gmail.com
Sito web: studioaire.it – P.IVA 02561480340

135	Setto	117	125	126	118	1	1	25.0
136	Setto	118	126	127	119	1	1	25.0
137	Setto	119	127	128	120	1	1	25.0
138	Setto	120	128	129	121	1	1	25.0
139	Setto	123	131	130	122	1	1	25.0
140	Setto	122	130	132	124	1	1	25.0
141	Setto	124	132	133	125	1	1	25.0
142	Setto	125	133	134	126	1	1	25.0
143	Setto	126	134	135	127	1	1	25.0
144	Setto	127	135	136	128	1	1	25.0
145	Setto	128	136	137	129	1	1	25.0
146	Setto	131	139	138	130	1	1	25.0
147	Setto	130	138	140	132	1	1	25.0
148	Setto	132	140	141	133	1	1	25.0
149	Setto	133	141	142	134	1	1	25.0
150	Setto	134	142	143	135	1	1	25.0
151	Setto	135	143	144	136	1	1	25.0
152	Setto	136	144	145	137	1	1	25.0
153	Setto	139	3	146	138	1	1	25.0
154	Setto	138	146	147	140	1	1	25.0
155	Setto	140	147	148	141	1	1	25.0
156	Setto	141	148	149	142	1	1	25.0
157	Setto	142	149	150	143	1	1	25.0
158	Setto	143	150	151	144	1	1	25.0
159	Setto	144	151	693	145	1	1	25.0
160	Setto	694	154	153	152	1	1	25.0
161	Setto	152	153	156	155	1	1	25.0
162	Setto	155	156	158	157	1	1	25.0
163	Setto	157	158	160	159	1	1	25.0
164	Setto	159	160	162	161	1	1	25.0
165	Setto	161	162	164	163	1	1	25.0
166	Setto	163	164	165	690	1	1	25.0
167	Setto	154	167	166	153	1	1	25.0
168	Setto	153	166	168	156	1	1	25.0
169	Setto	156	168	169	158	1	1	25.0
170	Setto	158	169	170	160	1	1	25.0
171	Setto	160	170	171	162	1	1	25.0
172	Setto	162	171	172	164	1	1	25.0
173	Setto	164	172	173	165	1	1	25.0
174	Setto	167	175	174	166	1	1	25.0
175	Setto	166	174	176	168	1	1	25.0
176	Setto	168	176	177	169	1	1	25.0
177	Setto	169	177	178	170	1	1	25.0
178	Setto	170	178	179	171	1	1	25.0
179	Setto	171	179	180	172	1	1	25.0
180	Setto	172	180	181	173	1	1	25.0
181	Setto	175	183	182	174	1	1	25.0
182	Setto	174	182	184	176	1	1	25.0
183	Setto	176	184	185	177	1	1	25.0
184	Setto	177	185	186	178	1	1	25.0
185	Setto	178	186	187	179	1	1	25.0
186	Setto	179	187	188	180	1	1	25.0
187	Setto	180	188	189	181	1	1	25.0
188	Setto	183	191	190	182	1	1	25.0
189	Setto	182	190	192	184	1	1	25.0
190	Setto	184	192	193	185	1	1	25.0
191	Setto	185	193	194	186	1	1	25.0
192	Setto	186	194	195	187	1	1	25.0
193	Setto	187	195	196	188	1	1	25.0
194	Setto	188	196	197	189	1	1	25.0
195	Setto	191	199	198	190	1	1	25.0
196	Setto	190	198	200	192	1	1	25.0
197	Setto	192	200	201	193	1	1	25.0
198	Setto	193	201	202	194	1	1	25.0
199	Setto	194	202	203	195	1	1	25.0
200	Setto	195	203	204	196	1	1	25.0
201	Setto	196	204	205	197	1	1	25.0
202	Setto	199	207	206	198	1	1	25.0
203	Setto	198	206	208	200	1	1	25.0
204	Setto	200	208	209	201	1	1	25.0
205	Setto	201	209	210	202	1	1	25.0
206	Setto	202	210	211	203	1	1	25.0
207	Setto	203	211	212	204	1	1	25.0
208	Setto	204	212	213	205	1	1	25.0
209	Setto	207	215	214	206	1	1	25.0
210	Setto	206	214	216	208	1	1	25.0
211	Setto	208	216	217	209	1	1	25.0
212	Setto	209	217	218	210	1	1	25.0
213	Setto	210	218	219	211	1	1	25.0
214	Setto	211	219	220	212	1	1	25.0
215	Setto	212	220	221	213	1	1	25.0
216	Setto	215	223	222	214	1	1	25.0
217	Setto	214	222	224	216	1	1	25.0
218	Setto	216	224	225	217	1	1	25.0
219	Setto	217	225	226	218	1	1	25.0
220	Setto	218	226	227	219	1	1	25.0
221	Setto	219	227	228	220	1	1	25.0
222	Setto	220	228	229	221	1	1	25.0
223	Setto	223	231	230	222	1	1	25.0
224	Setto	222	230	232	224	1	1	25.0
225	Setto	224	232	233	225	1	1	25.0
226	Setto	225	233	234	226	1	1	25.0
227	Setto	226	234	235	227	1	1	25.0
228	Setto	227	235	236	228	1	1	25.0
229	Setto	228	236	237	229	1	1	25.0
230	Setto	231	239	238	230	1	1	25.0
231	Setto	230	238	240	232	1	1	25.0
232	Setto	232	240	241	233	1	1	25.0

Viale Duca Alessandro n. 11 – 43123 Parma
Cell. 335 1403156 – E mail ing.concari@gmail.com
Sito web: studioaire.it – P.IVA 02561480340

233	Setto	233	241	242	234	1	1	25.0
234	Setto	234	242	243	235	1	1	25.0
235	Setto	235	243	244	236	1	1	25.0
236	Setto	236	244	245	237	1	1	25.0
237	Setto	239	247	246	238	1	1	25.0
238	Setto	238	246	248	240	1	1	25.0
239	Setto	240	248	249	241	1	1	25.0
240	Setto	241	249	250	242	1	1	25.0
241	Setto	242	250	251	243	1	1	25.0
242	Setto	243	251	252	244	1	1	25.0
243	Setto	244	252	253	245	1	1	25.0
244	Setto	247	255	254	246	1	1	25.0
245	Setto	246	254	256	248	1	1	25.0
246	Setto	248	256	257	249	1	1	25.0
247	Setto	249	257	258	250	1	1	25.0
248	Setto	250	258	259	251	1	1	25.0
249	Setto	251	259	260	252	1	1	25.0
250	Setto	252	260	261	253	1	1	25.0
251	Setto	255	263	262	254	1	1	25.0
252	Setto	254	262	264	256	1	1	25.0
253	Setto	256	264	265	257	1	1	25.0
254	Setto	257	265	266	258	1	1	25.0
255	Setto	258	266	267	259	1	1	25.0
256	Setto	259	267	268	260	1	1	25.0
257	Setto	260	268	269	261	1	1	25.0
258	Setto	263	271	270	262	1	1	25.0
259	Setto	262	270	272	264	1	1	25.0
260	Setto	264	272	273	265	1	1	25.0
261	Setto	265	273	274	266	1	1	25.0
262	Setto	266	274	275	267	1	1	25.0
263	Setto	267	275	276	268	1	1	25.0
264	Setto	268	276	277	269	1	1	25.0
265	Setto	271	279	278	270	1	1	25.0
266	Setto	270	278	280	272	1	1	25.0
267	Setto	272	280	281	273	1	1	25.0
268	Setto	273	281	282	274	1	1	25.0
269	Setto	274	282	283	275	1	1	25.0
270	Setto	275	283	284	276	1	1	25.0
271	Setto	276	284	285	277	1	1	25.0
272	Setto	279	287	286	278	1	1	25.0
273	Setto	278	286	288	280	1	1	25.0
274	Setto	280	288	289	281	1	1	25.0
275	Setto	281	289	290	282	1	1	25.0
276	Setto	282	290	291	283	1	1	25.0
277	Setto	283	291	292	284	1	1	25.0
278	Setto	284	292	293	285	1	1	25.0
279	Setto	287	2	294	286	1	1	25.0
280	Setto	286	294	295	288	1	1	25.0
281	Setto	288	295	296	289	1	1	25.0
282	Setto	289	296	297	290	1	1	25.0
283	Setto	290	297	298	291	1	1	25.0
284	Setto	291	298	299	292	1	1	25.0
285	Setto	292	299	692	293	1	1	25.0
286	Setto	152	300	301	694	1	1	25.0
287	Setto	155	302	300	152	1	1	25.0
288	Setto	157	303	302	155	1	1	25.0
289	Setto	159	304	303	157	1	1	25.0
290	Setto	161	305	304	159	1	1	25.0
291	Setto	163	306	305	161	1	1	25.0
292	Setto	690	307	306	163	1	1	25.0
293	Setto	300	308	309	301	1	1	25.0
294	Setto	302	310	308	300	1	1	25.0
295	Setto	303	311	310	302	1	1	25.0
296	Setto	304	312	311	303	1	1	25.0
297	Setto	305	313	312	304	1	1	25.0
298	Setto	306	314	313	305	1	1	25.0
299	Setto	307	315	314	306	1	1	25.0
300	Setto	308	316	317	309	1	1	25.0
301	Setto	310	318	316	308	1	1	25.0
302	Setto	311	319	318	310	1	1	25.0
303	Setto	312	320	319	311	1	1	25.0
304	Setto	313	321	320	312	1	1	25.0
305	Setto	314	322	321	313	1	1	25.0
306	Setto	315	323	322	314	1	1	25.0
307	Setto	316	324	325	317	1	1	25.0
308	Setto	318	326	324	316	1	1	25.0
309	Setto	319	327	326	318	1	1	25.0
310	Setto	320	328	327	319	1	1	25.0
311	Setto	321	329	328	320	1	1	25.0
312	Setto	322	330	329	321	1	1	25.0
313	Setto	323	331	330	322	1	1	25.0
314	Setto	324	332	333	325	1	1	25.0
315	Setto	326	334	332	324	1	1	25.0
316	Setto	327	335	334	326	1	1	25.0
317	Setto	328	336	335	327	1	1	25.0
318	Setto	329	337	336	328	1	1	25.0
319	Setto	330	338	337	329	1	1	25.0
320	Setto	331	339	338	330	1	1	25.0
321	Setto	332	340	341	333	1	1	25.0
322	Setto	334	342	340	332	1	1	25.0
323	Setto	335	343	342	334	1	1	25.0
324	Setto	336	344	343	335	1	1	25.0
325	Setto	337	345	344	336	1	1	25.0
326	Setto	338	346	345	337	1	1	25.0
327	Setto	339	347	346	338	1	1	25.0
328	Setto	340	348	349	341	1	1	25.0
329	Setto	342	350	348	340	1	1	25.0
330	Setto	343	351	350	342	1	1	25.0

Viale Duca Alessandro n. 11 – 43123 Parma
Cell. 335 1403156 – E mail ing.concari@gmail.com
Sito web: studioaire.it – P.IVA 02561480340

331	Setto	344	352	351	343	1	1	25.0		
332	Setto	345	353	352	344	1	1	25.0		
333	Setto	346	354	353	345	1	1	25.0		
334	Setto	347	355	354	346	1	1	25.0		
335	Setto	348	356	357	349	1	1	25.0		
336	Setto	350	358	356	348	1	1	25.0		
337	Setto	351	359	358	350	1	1	25.0		
338	Setto	352	360	359	351	1	1	25.0		
339	Setto	353	361	360	352	1	1	25.0		
340	Setto	354	362	361	353	1	1	25.0		
341	Setto	355	363	362	354	1	1	25.0		
342	Setto	356	364	365	357	1	1	25.0		
343	Setto	358	366	364	356	1	1	25.0		
344	Setto	359	367	366	358	1	1	25.0		
345	Setto	360	368	367	359	1	1	25.0		
346	Setto	361	369	368	360	1	1	25.0		
347	Setto	362	370	369	361	1	1	25.0		
348	Setto	363	371	370	362	1	1	25.0		
349	Setto	364	372	373	365	1	1	25.0		
350	Setto	366	374	372	364	1	1	25.0		
351	Setto	367	375	374	366	1	1	25.0		
352	Setto	368	376	375	367	1	1	25.0		
353	Setto	369	377	376	368	1	1	25.0		
354	Setto	370	378	377	369	1	1	25.0		
355	Setto	371	379	378	370	1	1	25.0		
356	Setto	372	380	381	373	1	1	25.0		
357	Setto	374	382	380	372	1	1	25.0		
358	Setto	375	383	382	374	1	1	25.0		
359	Setto	376	384	383	375	1	1	25.0		
360	Setto	377	385	384	376	1	1	25.0		
361	Setto	378	386	385	377	1	1	25.0		
362	Setto	379	387	386	378	1	1	25.0		
363	Setto	380	4	1	381	1	1	25.0		
364	Setto	382	7	4	380	1	1	25.0		
365	Setto	383	9	7	382	1	1	25.0		
366	Setto	384	11	9	383	1	1	25.0		
367	Setto	385	13	11	384	1	1	25.0		
368	Setto	386	15	13	385	1	1	25.0		
369	Setto	387	691	15	386	1	1	25.0		
370	Setto	294	388	389	2	1	1	25.0		
371	Setto	295	390	388	294	1	1	25.0		
372	Setto	296	391	390	295	1	1	25.0		
373	Setto	297	392	391	296	1	1	25.0		
374	Setto	298	393	392	297	1	1	25.0		
375	Setto	299	394	393	298	1	1	25.0		
376	Setto	692	395	394	299	1	1	25.0		
377	Setto	388	396	397	389	1	1	25.0		
378	Setto	390	398	396	388	1	1	25.0		
379	Setto	391	399	398	390	1	1	25.0		
380	Setto	392	400	399	391	1	1	25.0		
381	Setto	393	401	400	392	1	1	25.0		
382	Setto	394	402	401	393	1	1	25.0		
383	Setto	395	403	402	394	1	1	25.0		
384	Setto	396	404	405	397	1	1	25.0		
385	Setto	398	406	404	396	1	1	25.0		
386	Guscio fond.	459	673	674	467	1	2	40.0	0.27	0.18
387	Guscio fond.	467	674	675	475	1	2	40.0	0.27	0.18
388	Guscio fond.	475	675	676	693	1	2	40.0	0.27	0.18
389	Guscio fond.	678	690	307	677	1	2	40.0	0.27	0.18
390	Guscio fond.	677	307	315	679	1	2	40.0	0.27	0.18
391	Setto	404	412	413	405	1	1	25.0		
392	Setto	406	414	412	404	1	1	25.0		
393	Guscio fond.	679	315	323	680	1	2	40.0	0.27	0.18
394	Guscio fond.	680	323	331	681	1	2	40.0	0.27	0.18
395	Guscio fond.	681	331	339	682	1	2	40.0	0.27	0.18
396	Guscio fond.	682	339	347	683	1	2	40.0	0.27	0.18
397	Guscio fond.	683	347	355	684	1	2	40.0	0.27	0.18
398	Setto	412	420	421	413	1	1	25.0		
399	Setto	414	422	420	412	1	1	25.0		
400	Guscio fond.	684	355	363	685	1	2	40.0	0.27	0.18
401	Guscio fond.	685	363	371	686	1	2	40.0	0.27	0.18
402	Guscio fond.	686	371	379	687	1	2	40.0	0.27	0.18
403	Guscio fond.	687	379	387	688	1	2	40.0	0.27	0.18
404	Guscio fond.	688	387	691	689	1	2	40.0	0.27	0.18
405	Setto	420	428	429	421	1	1	25.0		
406	Setto	422	430	428	420	1	1	25.0		
407	Guscio fond.	691	17	407	521	1	2	40.0	0.27	0.18
408	Guscio fond.	17	25	408	407	1	2	40.0	0.27	0.18
409	Guscio fond.	25	33	409	408	1	2	40.0	0.27	0.18
410	Guscio fond.	33	41	410	409	1	2	40.0	0.27	0.18
411	Guscio fond.	41	49	415	410	1	2	40.0	0.27	0.18
412	Setto	428	436	437	429	1	1	25.0		
413	Setto	430	438	436	428	1	1	25.0		
414	Setto	431	439	438	430	1	1	25.0		
415	Setto	432	440	439	431	1	1	25.0		
416	Setto	433	441	440	432	1	1	25.0		
417	Setto	434	442	441	433	1	1	25.0		
418	Setto	435	443	442	434	1	1	25.0		
419	Setto	436	444	445	437	1	1	25.0		
420	Setto	438	446	444	436	1	1	25.0		
421	Guscio fond.	49	57	416	415	1	2	40.0	0.27	0.18
422	Guscio fond.	57	65	417	416	1	2	40.0	0.27	0.18
423	Guscio fond.	65	73	418	417	1	2	40.0	0.27	0.18
424	Guscio fond.	73	81	423	418	1	2	40.0	0.27	0.18
425	Guscio fond.	81	89	424	423	1	2	40.0	0.27	0.18
426	Setto	444	452	453	445	1	1	25.0		
427	Setto	446	454	452	444	1	1	25.0		
428	Guscio fond.	89	97	425	424	1	2	40.0	0.27	0.18

Viale Duca Alessandro n. 11 – 43123 Parma
Cell. 335 1403156 – E mail ing.concari@gmail.com
Sito web: studioaire.it – P.IVA 02561480340

429	Guscio fond.	97	105	426	425	1	2	40.0	0.27	0.18
430	Guscio fond.	105	113	447	426	1	2	40.0	0.27	0.18
431	Guscio fond.	113	121	448	447	1	2	40.0	0.27	0.18
432	Guscio fond.	121	129	449	448	1	2	40.0	0.27	0.18
433	Setto	452	460	461	453	1	1	25.0		
434	Setto	454	462	460	452	1	1	25.0		
435	Guscio fond.	129	137	450	449	1	2	40.0	0.27	0.18
436	Guscio fond.	137	145	455	450	1	2	40.0	0.27	0.18
437	Guscio fond.	145	693	456	455	1	2	40.0	0.27	0.18
438	Guscio fond.	689	691	521	458	1	2	40.0	0.27	0.18
439	Guscio fond.	693	676	457	456	1	2	40.0	0.27	0.18
440	Setto	460	468	469	461	1	1	25.0		
441	Setto	462	470	468	460	1	1	25.0		
442	Setto	463	471	470	462	1	1	25.0		
443	Setto	464	472	471	463	1	1	25.0		
444	Setto	465	473	472	464	1	1	25.0		
445	Setto	466	474	473	465	1	1	25.0		
446	Setto	467	475	474	466	1	1	25.0		
447	Setto	468	146	3	469	1	1	25.0		
448	Setto	470	147	146	468	1	1	25.0		
449	Setto	471	148	147	470	1	1	25.0		
450	Setto	472	149	148	471	1	1	25.0		
451	Setto	473	150	149	472	1	1	25.0		
452	Setto	474	151	150	473	1	1	25.0		
453	Setto	475	693	151	474	1	1	25.0		
454	Guscio fond.	690	165	476	307	1	2	40.0	0.27	0.18
455	Guscio fond.	307	476	477	315	1	2	40.0	0.27	0.18
456	Guscio fond.	315	477	478	323	1	2	40.0	0.27	0.18
457	Guscio fond.	323	478	479	331	1	2	40.0	0.27	0.18
458	Guscio fond.	331	479	480	339	1	2	40.0	0.27	0.18
459	Guscio fond.	339	480	481	347	1	2	40.0	0.27	0.18
460	Guscio fond.	347	481	482	355	1	2	40.0	0.27	0.18
461	Guscio fond.	355	482	483	363	1	2	40.0	0.27	0.18
462	Guscio fond.	363	483	484	371	1	2	40.0	0.27	0.18
463	Guscio fond.	371	484	485	379	1	2	40.0	0.27	0.18
464	Guscio fond.	379	485	486	387	1	2	40.0	0.27	0.18
465	Guscio fond.	387	486	17	691	1	2	40.0	0.27	0.18
466	Guscio fond.	165	173	487	476	1	2	40.0	0.27	0.18
467	Guscio fond.	476	487	488	477	1	2	40.0	0.27	0.18
468	Guscio fond.	477	488	489	478	1	2	40.0	0.27	0.18
469	Guscio fond.	478	489	490	479	1	2	40.0	0.27	0.18
470	Guscio fond.	479	490	491	480	1	2	40.0	0.27	0.18
471	Guscio fond.	480	491	492	481	1	2	40.0	0.27	0.18
472	Guscio fond.	481	492	493	482	1	2	40.0	0.27	0.18
473	Guscio fond.	482	493	494	483	1	2	40.0	0.27	0.18
474	Guscio fond.	483	494	495	484	1	2	40.0	0.27	0.18
475	Guscio fond.	484	495	496	485	1	2	40.0	0.27	0.18
476	Guscio fond.	485	496	497	486	1	2	40.0	0.27	0.18
477	Guscio fond.	486	497	25	17	1	2	40.0	0.27	0.18
478	Guscio fond.	173	181	498	487	1	2	40.0	0.27	0.18
479	Guscio fond.	487	498	499	488	1	2	40.0	0.27	0.18
480	Guscio fond.	488	499	500	489	1	2	40.0	0.27	0.18
481	Guscio fond.	489	500	501	490	1	2	40.0	0.27	0.18
482	Guscio fond.	490	501	502	491	1	2	40.0	0.27	0.18
483	Guscio fond.	491	502	503	492	1	2	40.0	0.27	0.18
484	Guscio fond.	492	503	504	493	1	2	40.0	0.27	0.18
485	Guscio fond.	493	504	505	494	1	2	40.0	0.27	0.18
486	Guscio fond.	494	505	506	495	1	2	40.0	0.27	0.18
487	Guscio fond.	495	506	507	496	1	2	40.0	0.27	0.18
488	Guscio fond.	496	507	508	497	1	2	40.0	0.27	0.18
489	Guscio fond.	497	508	33	25	1	2	40.0	0.27	0.18
490	Guscio fond.	181	189	509	498	1	2	40.0	0.27	0.18
491	Guscio fond.	498	509	510	499	1	2	40.0	0.27	0.18
492	Guscio fond.	499	510	511	500	1	2	40.0	0.27	0.18
493	Guscio fond.	500	511	512	501	1	2	40.0	0.27	0.18
494	Guscio fond.	501	512	513	502	1	2	40.0	0.27	0.18
495	Guscio fond.	502	513	514	503	1	2	40.0	0.27	0.18
496	Guscio fond.	503	514	515	504	1	2	40.0	0.27	0.18
497	Guscio fond.	504	515	516	505	1	2	40.0	0.27	0.18
498	Guscio fond.	505	516	517	506	1	2	40.0	0.27	0.18
499	Guscio fond.	506	517	518	507	1	2	40.0	0.27	0.18
500	Guscio fond.	507	518	519	508	1	2	40.0	0.27	0.18
501	Guscio fond.	508	519	41	33	1	2	40.0	0.27	0.18
502	Guscio fond.	189	197	520	509	1	2	40.0	0.27	0.18
503	Guscio fond.	509	520	522	510	1	2	40.0	0.27	0.18
504	Guscio fond.	510	522	523	511	1	2	40.0	0.27	0.18
505	Guscio fond.	511	523	524	512	1	2	40.0	0.27	0.18
506	Guscio fond.	512	524	525	513	1	2	40.0	0.27	0.18
507	Guscio fond.	513	525	526	514	1	2	40.0	0.27	0.18
508	Guscio fond.	514	526	527	515	1	2	40.0	0.27	0.18
509	Guscio fond.	515	527	528	516	1	2	40.0	0.27	0.18
510	Guscio fond.	516	528	529	517	1	2	40.0	0.27	0.18
511	Guscio fond.	517	529	530	518	1	2	40.0	0.27	0.18
512	Guscio fond.	518	530	531	519	1	2	40.0	0.27	0.18
513	Guscio fond.	519	531	49	41	1	2	40.0	0.27	0.18
514	Guscio fond.	197	205	532	520	1	2	40.0	0.27	0.18
515	Guscio fond.	520	532	533	522	1	2	40.0	0.27	0.18
516	Guscio fond.	522	533	534	523	1	2	40.0	0.27	0.18
517	Guscio fond.	523	534	535	524	1	2	40.0	0.27	0.18
518	Guscio fond.	524	535	536	525	1	2	40.0	0.27	0.18
519	Guscio fond.	525	536	537	526	1	2	40.0	0.27	0.18
520	Guscio fond.	526	537	538	527	1	2	40.0	0.27	0.18
521	Guscio fond.	527	538	539	528	1	2	40.0	0.27	0.18
522	Guscio fond.	528	539	540	529	1	2	40.0	0.27	0.18
523	Guscio fond.	529	540	541	530	1	2	40.0	0.27	0.18
524	Guscio fond.	530	541	542	531	1	2	40.0	0.27	0.18
525	Guscio fond.	531	542	57	49	1	2	40.0	0.27	0.18
526	Guscio fond.	205	213	543	532	1	2	40.0	0.27	0.18

Viale Duca Alessandro n. 11 – 43123 Parma
Cell. 335 1403156 – E mail ing.concari@gmail.com
Sito web: studioaire.it – P.IVA 02561480340

527	Guscio fond.	532	543	544	533	1	2	40.0	0.27	0.18
528	Guscio fond.	533	544	545	534	1	2	40.0	0.27	0.18
529	Guscio fond.	534	545	546	535	1	2	40.0	0.27	0.18
530	Guscio fond.	535	546	547	536	1	2	40.0	0.27	0.18
531	Guscio fond.	536	547	548	537	1	2	40.0	0.27	0.18
532	Guscio fond.	537	548	549	538	1	2	40.0	0.27	0.18
533	Guscio fond.	538	549	550	539	1	2	40.0	0.27	0.18
534	Guscio fond.	539	550	551	540	1	2	40.0	0.27	0.18
535	Guscio fond.	540	551	552	541	1	2	40.0	0.27	0.18
536	Guscio fond.	541	552	553	542	1	2	40.0	0.27	0.18
537	Guscio fond.	542	553	65	57	1	2	40.0	0.27	0.18
538	Guscio fond.	213	221	554	543	1	2	40.0	0.27	0.18
539	Guscio fond.	543	554	555	544	1	2	40.0	0.27	0.18
540	Guscio fond.	544	555	556	545	1	2	40.0	0.27	0.18
541	Guscio fond.	545	556	557	546	1	2	40.0	0.27	0.18
542	Guscio fond.	546	557	558	547	1	2	40.0	0.27	0.18
543	Guscio fond.	547	558	559	548	1	2	40.0	0.27	0.18
544	Guscio fond.	548	559	560	549	1	2	40.0	0.27	0.18
545	Guscio fond.	549	560	561	550	1	2	40.0	0.27	0.18
546	Guscio fond.	550	561	562	551	1	2	40.0	0.27	0.18
547	Guscio fond.	551	562	563	552	1	2	40.0	0.27	0.18
548	Guscio fond.	552	563	564	553	1	2	40.0	0.27	0.18
549	Guscio fond.	553	564	73	65	1	2	40.0	0.27	0.18
550	Guscio fond.	221	229	565	554	1	2	40.0	0.27	0.18
551	Guscio fond.	554	565	566	555	1	2	40.0	0.27	0.18
552	Guscio fond.	555	566	567	556	1	2	40.0	0.27	0.18
553	Guscio fond.	556	567	568	557	1	2	40.0	0.27	0.18
554	Guscio fond.	557	568	569	558	1	2	40.0	0.27	0.18
555	Guscio fond.	558	569	570	559	1	2	40.0	0.27	0.18
556	Guscio fond.	559	570	571	560	1	2	40.0	0.27	0.18
557	Guscio fond.	560	571	572	561	1	2	40.0	0.27	0.18
558	Guscio fond.	561	572	573	562	1	2	40.0	0.27	0.18
559	Guscio fond.	562	573	574	563	1	2	40.0	0.27	0.18
560	Guscio fond.	563	574	575	564	1	2	40.0	0.27	0.18
561	Guscio fond.	564	575	81	73	1	2	40.0	0.27	0.18
562	Guscio fond.	229	237	576	565	1	2	40.0	0.27	0.18
563	Guscio fond.	565	576	577	566	1	2	40.0	0.27	0.18
564	Guscio fond.	566	577	578	567	1	2	40.0	0.27	0.18
565	Guscio fond.	567	578	579	568	1	2	40.0	0.27	0.18
566	Guscio fond.	568	579	580	569	1	2	40.0	0.27	0.18
567	Guscio fond.	569	580	581	570	1	2	40.0	0.27	0.18
568	Guscio fond.	570	581	582	571	1	2	40.0	0.27	0.18
569	Guscio fond.	571	582	583	572	1	2	40.0	0.27	0.18
570	Guscio fond.	572	583	584	573	1	2	40.0	0.27	0.18
571	Guscio fond.	573	584	585	574	1	2	40.0	0.27	0.18
572	Guscio fond.	574	585	586	575	1	2	40.0	0.27	0.18
573	Guscio fond.	575	586	89	81	1	2	40.0	0.27	0.18
574	Guscio fond.	237	245	587	576	1	2	40.0	0.27	0.18
575	Guscio fond.	576	587	588	577	1	2	40.0	0.27	0.18
576	Guscio fond.	577	588	589	578	1	2	40.0	0.27	0.18
577	Guscio fond.	578	589	590	579	1	2	40.0	0.27	0.18
578	Guscio fond.	579	590	591	580	1	2	40.0	0.27	0.18
579	Guscio fond.	580	591	592	581	1	2	40.0	0.27	0.18
580	Guscio fond.	581	592	593	582	1	2	40.0	0.27	0.18
581	Guscio fond.	582	593	594	583	1	2	40.0	0.27	0.18
582	Guscio fond.	583	594	595	584	1	2	40.0	0.27	0.18
583	Guscio fond.	584	595	596	585	1	2	40.0	0.27	0.18
584	Guscio fond.	585	596	597	586	1	2	40.0	0.27	0.18
585	Guscio fond.	586	597	97	89	1	2	40.0	0.27	0.18
586	Guscio fond.	245	253	598	587	1	2	40.0	0.27	0.18
587	Guscio fond.	587	598	599	588	1	2	40.0	0.27	0.18
588	Guscio fond.	588	599	600	589	1	2	40.0	0.27	0.18
589	Guscio fond.	589	600	601	590	1	2	40.0	0.27	0.18
590	Guscio fond.	590	601	602	591	1	2	40.0	0.27	0.18
591	Guscio fond.	591	602	603	592	1	2	40.0	0.27	0.18
592	Guscio fond.	592	603	604	593	1	2	40.0	0.27	0.18
593	Guscio fond.	593	604	605	594	1	2	40.0	0.27	0.18
594	Guscio fond.	594	605	606	595	1	2	40.0	0.27	0.18
595	Guscio fond.	595	606	607	596	1	2	40.0	0.27	0.18
596	Guscio fond.	596	607	608	597	1	2	40.0	0.27	0.18
597	Guscio fond.	597	608	105	97	1	2	40.0	0.27	0.18
598	Guscio fond.	253	261	609	598	1	2	40.0	0.27	0.18
599	Guscio fond.	598	609	610	599	1	2	40.0	0.27	0.18
600	Guscio fond.	599	610	611	600	1	2	40.0	0.27	0.18
601	Guscio fond.	600	611	612	601	1	2	40.0	0.27	0.18
602	Guscio fond.	601	612	613	602	1	2	40.0	0.27	0.18
603	Guscio fond.	602	613	614	603	1	2	40.0	0.27	0.18
604	Guscio fond.	603	614	615	604	1	2	40.0	0.27	0.18
605	Guscio fond.	604	615	616	605	1	2	40.0	0.27	0.18
606	Guscio fond.	605	616	617	606	1	2	40.0	0.27	0.18
607	Guscio fond.	606	617	618	607	1	2	40.0	0.27	0.18
608	Guscio fond.	607	618	619	608	1	2	40.0	0.27	0.18
609	Guscio fond.	608	619	113	105	1	2	40.0	0.27	0.18
610	Guscio fond.	261	269	620	609	1	2	40.0	0.27	0.18
611	Guscio fond.	609	620	621	610	1	2	40.0	0.27	0.18
612	Guscio fond.	610	621	622	611	1	2	40.0	0.27	0.18
613	Guscio fond.	611	622	623	612	1	2	40.0	0.27	0.18
614	Guscio fond.	612	623	624	613	1	2	40.0	0.27	0.18
615	Guscio fond.	613	624	625	614	1	2	40.0	0.27	0.18
616	Guscio fond.	614	625	626	615	1	2	40.0	0.27	0.18
617	Guscio fond.	615	626	627	616	1	2	40.0	0.27	0.18
618	Guscio fond.	616	627	628	617	1	2	40.0	0.27	0.18
619	Guscio fond.	617	628	629	618	1	2	40.0	0.27	0.18
620	Guscio fond.	618	629	630	619	1	2	40.0	0.27	0.18
621	Guscio fond.	619	630	121	113	1	2	40.0	0.27	0.18
622	Guscio fond.	269	277	631	620	1	2	40.0	0.27	0.18
623	Guscio fond.	620	631	632	621	1	2	40.0	0.27	0.18
624	Guscio fond.	621	632	633	622	1	2	40.0	0.27	0.18

Viale Duca Alessandro n. 11 – 43123 Parma
Cell. 335 1403156 – E mail ing.concari@gmail.com
Sito web: studioaire.it – P.IVA 02561480340

625	Guscio fond.	622	633	634	623	1	2	40.0	0.27	0.18
626	Guscio fond.	623	634	635	624	1	2	40.0	0.27	0.18
627	Guscio fond.	624	635	636	625	1	2	40.0	0.27	0.18
628	Guscio fond.	625	636	637	626	1	2	40.0	0.27	0.18
629	Guscio fond.	626	637	638	627	1	2	40.0	0.27	0.18
630	Guscio fond.	627	638	639	628	1	2	40.0	0.27	0.18
631	Guscio fond.	628	639	640	629	1	2	40.0	0.27	0.18
632	Guscio fond.	629	640	641	630	1	2	40.0	0.27	0.18
633	Guscio fond.	630	641	129	121	1	2	40.0	0.27	0.18
634	Guscio fond.	277	285	642	631	1	2	40.0	0.27	0.18
635	Guscio fond.	631	642	643	632	1	2	40.0	0.27	0.18
636	Guscio fond.	632	643	644	633	1	2	40.0	0.27	0.18
637	Guscio fond.	633	644	645	634	1	2	40.0	0.27	0.18
638	Guscio fond.	634	645	646	635	1	2	40.0	0.27	0.18
639	Guscio fond.	635	646	647	636	1	2	40.0	0.27	0.18
640	Guscio fond.	636	647	648	637	1	2	40.0	0.27	0.18
641	Guscio fond.	637	648	649	638	1	2	40.0	0.27	0.18
642	Guscio fond.	638	649	650	639	1	2	40.0	0.27	0.18
643	Guscio fond.	639	650	651	640	1	2	40.0	0.27	0.18
644	Guscio fond.	640	651	652	641	1	2	40.0	0.27	0.18
645	Guscio fond.	641	652	137	129	1	2	40.0	0.27	0.18

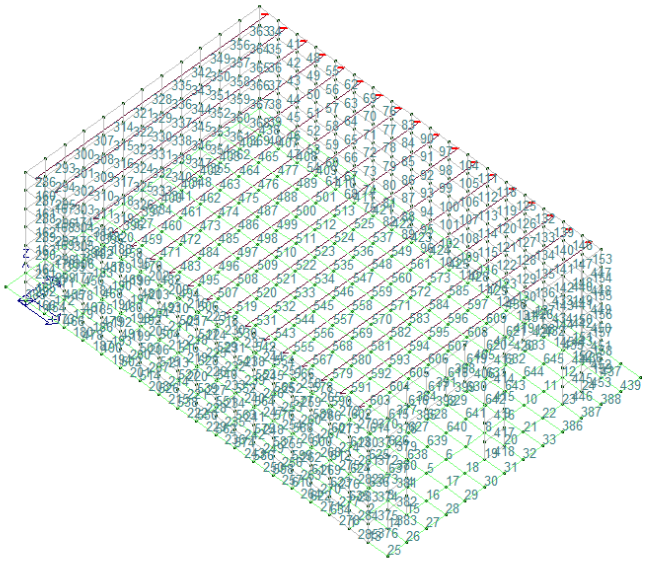

Numerazione elementi D3

MODELLAZIONE DELLA STRUTTURA: ELEMENTI SOLAIO E PANNELLO

MODELLO 1 SCALA ANTINCENDIO

ID Arch. Tipo	G1k	G2k	Qk	Fatt. A	s sis.	Psi 0	Psi 1	Psi 2	Psi S 2	Fatt. Fi	
		daN/cm2	daN/cm2	daN/cm2							
1	Variab.	4.00e-03		4.00e-02		1.00	0.70	0.70	0.60	0.60	1.00

Elem. Nodo..	Tipo	ID Arch.	Mat.	Spessore	Orditura	G1k	G2k	Qk	Nodo 1/6..	Nodo 2/7..	Nodo 3/8..	Nodo..
						daN/cm2	daN/cm2	daN/cm2				
1	SM	1	m=12	1.0	0.0	4.00e-03		4.00e-02	37	31	12	11
2	SM	1	m=12	1.0	0.0	4.00e-03		4.00e-02	17	16	21	20
3	SM	1	m=12	1.0	0.0	4.00e-03		4.00e-02	38	13	19	23
4	SM	1	m=12	1.0	0.0	4.00e-03		4.00e-02	23	27	18	38
5	SM	1	m=12	1.0	0.0	4.00e-03		4.00e-02	12	36	26	11
6	SM	1	m=12	1.0	0.0	4.00e-03		4.00e-02	24	17	20	25
7	SM	1	m=12	1.0	0.0	4.00e-03		4.00e-02	22	19	13	4
8	SM	1	m=12	1.0	0.0	4.00e-03		4.00e-02	13	28	1	4
9	SM	1	m=12	1.0	0.0	4.00e-03		4.00e-02	29	34	31	37
10	SM	1	m=12	1.0	90.0	4.00e-03		4.00e-02	29	37	35	30

Viale Duca Alessandro n. 11 – 43123 Parma
Cell. 335 1403156 – E mail ing.concari@gmail.com
Sito web: studioaire.it – P.IVA 02561480340

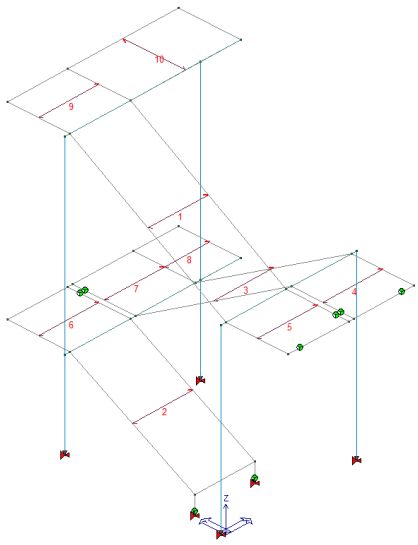

Numerazione elementi solaio e pannello

MODELLO 1 VANO ASCENSORE

ID Arch.	Tipo	G1k	G2k	Qk	Fatt. A	s sis.	Psi 0	Psi 1	Psi 2	Psi S 2	Fatt. Fi
		daN/ m2	daN/ m2	daN/ m2							
1	Variab.	430.00		400.00		1.00	0.70	0.70	0.60	0.60	1.00
2	Variab.	400.00		400.00		1.00	0.70	0.70	0.60	0.60	1.00

Elem.	Tipo	ID Arch.	Mat.	Spessore	Orditura	G1k	G2k	Qk	Nodo 1/6..	Nodo 2/7..	Nodo 3/8..	Nodo..	Nodo..
						daN/ m2	daN/ m2	daN/ m2					
1	CM	1	m=1	5.0	90.0	430.00		400.00	205	212	219	226	233
									240	247	254	261	268
									275	282	87	330	323
									316	309	302	295	163
									156	149	142	135	133
									126	119	112	105	104
2	CM	2	m=1	5.0	90.0	400.00		400.00	6	7	8	5	4
									3				
3	PM		m=147	1.0	90.0				104	3	6	268	261
									254	247	240	233	226
									219	212	205		
4	PM		m=147	1.0	90.0				9	12	6	3	

Viale Duca Alessandro n. 11 – 43123 Parma
Cell. 335 1403156 – E mail ing.concari@gmail.com
Sito web: studioaire.it – P.IVA 02561480340

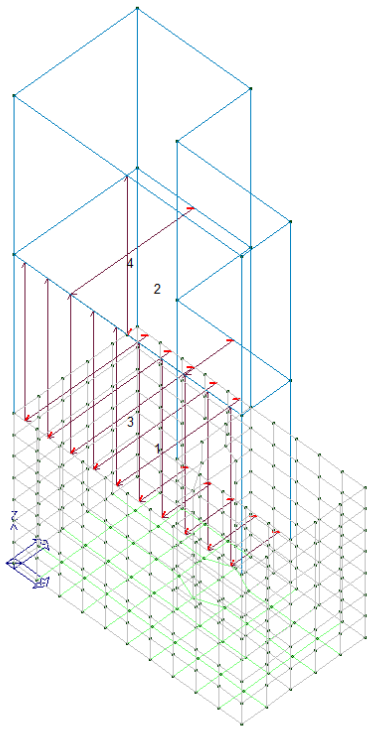

Numerazione elementi solaio e pannello

MODELLO LOCALE TECNICO

ID Arch.	Tipo	G1k	G2k	Qk	Fatt. A	s sis.	Psi 0	Psi 1	Psi 2	Psi S 2	Fatt. Fi
		daN/ m2	daN/ m2	daN/ m2							
1	Variab.	885.00		440.00		1.00	0.50	0.20	0.0	0.0	1.00

Elem.	Tipo	ID Arch.	Mat.	Spessore	Orditura	G1k	G2k	Qk	Nodo 1/6..	Nodo 2/7..	Nodo 3/8..	Nodo..	Nodo..
						daN/ m2	daN/ m2	daN/ m2					
1	CM	1	m=1	5.0	90.0	885.00		440.00	154	167	175	183	191
									199	207	215	223	231
									239	247	255	263	271
									279	287	2	389	397
									405	413	421	429	437
									445	453	461	469	3
									139	131	123	115	107
									99	91	83	75	67
									59	51	43	35	27
									19	6	1	381	373
									365	357	349	341	333
									325	317	309	301	694

Viale Duca Alessandro n. 11 – 43123 Parma
Cell. 335 1403156 – E mail ing.concari@gmail.com
Sito web: studioaire.it – P.IVA 02561480340

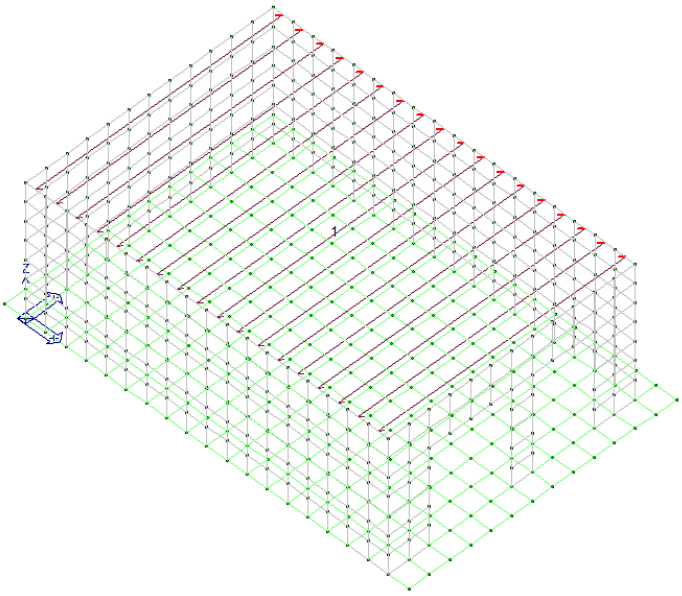

Numerazione elementi solaio e pannello

2.1.3 – Calcolo dell'azione sismica

RISPOSTA SISMICA LOCALE

Periodo	Se(t) spettro input
[s]	[g]
0.01	0.298
0.01	0.298
0.01	0.299
0.01	0.299
0.01	0.299
0.02	0.299
0.02	0.299
0.02	0.300
0.02	0.300
0.02	0.301
0.03	0.302
0.03	0.304
0.03	0.306
0.04	0.306
0.04	0.306
0.04	0.308
0.05	0.315
0.05	0.320
0.06	0.323
0.07	0.340
0.07	0.354
0.08	0.384
0.09	0.408
0.10	0.482
0.11	0.522
0.12	0.516
0.13	0.592
0.14	0.706
0.16	0.726
0.17	0.580
0.19	0.531
0.21	0.509
0.23	0.515
0.26	0.575
0.29	0.604
0.32	0.651
0.35	0.705
0.38	0.760
0.42	0.867
0.47	0.913
0.52	0.833
0.57	0.691
0.63	0.610
0.70	0.516
0.77	0.406

Viale Duca Alessandro n. 11 – 43123 Parma
Cell. 335 1403156 – E mail ing.concari@gmail.com
Sito web: studioaire.it – P.IVA 02561480340

Periodo	Se(t) spettro input
0.85	0.344
0.93	0.293
1.03	0.246
1.14	0.206
1.26	0.179
1.39	0.177
1.53	0.171
1.69	0.156
1.86	0.137
2.06	0.114
2.27	0.092
2.51	0.071
2.77	0.053
3.05	0.041
3.37	0.034
3.72	0.028
4.10	0.023
4.53	0.018
5.00	0.014

Periodo di ritorno <Tr>	Accelerazione max <ag>	Amplificazione <Fo>	Inizio v=costante <T*c>
	[g]		[s]
30	0.083	2.503	0.471
50	0.104	2.501	0.510
72	0.121	2.516	0.510
101	0.139	2.508	0.530
140	0.157	2.509	0.530
201	0.179	2.525	0.549
475	0.242	2.549	0.563
712	0.276	2.559	0.574
975	0.305	2.567	0.583
2475	0.397	2.602	0.608

Confronto spettri RSL vs NTC	
Tmin	0.100
2Tmax	0.700
Integrale RSL	0.354
Integrale NTC*1.2	0.383
Rapporto	0.925
Esito confronto	Non ammesso l'uso dello spettro NTC (30% superato)

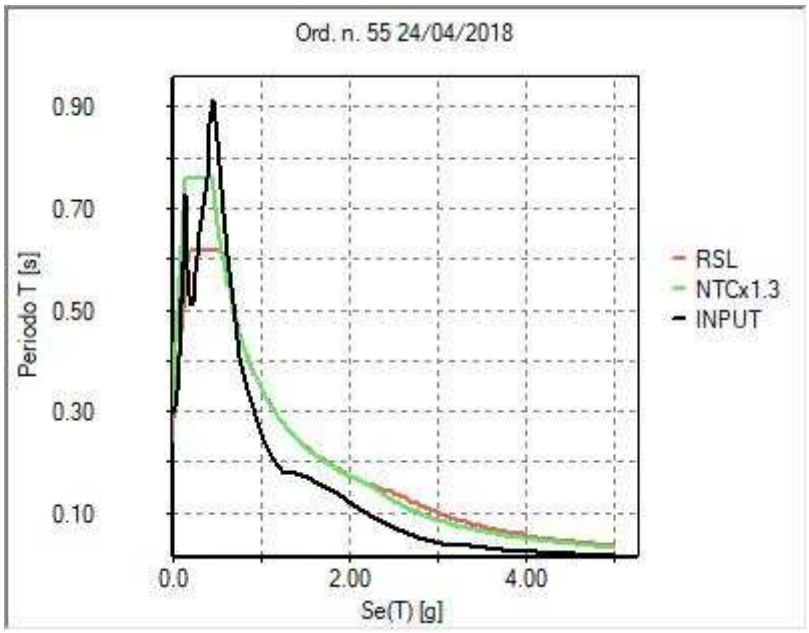

Fig. 1

Periodo	Se(t) RSL	Se(t) NTC*1.3	Confronto ord.55
[s]	[g]	[g]	
0.000	0.242	0.302	Non richiesto
0.010	0.262	0.332	Non richiesto
0.011	0.264	0.335	Non richiesto
0.012	0.267	0.339	Non richiesto
0.013	0.269	0.343	Non richiesto
0.015	0.272	0.347	Non richiesto
0.016	0.275	0.352	Non richiesto
0.018	0.278	0.357	Non richiesto

Viale Duca Alessandro n. 11 – 43123 Parma
Cell. 335 1403156 – E mail ing.concari@gmail.com
Sito web: studioaire.it – P.IVA 02561480340

Periodo	Se(t) RSL	Se(t) NTC*1.3	Confronto ord.55
0.020	0.282	0.362	Non richiesto
0.022	0.286	0.368	Non richiesto
0.024	0.291	0.375	Non richiesto
0.027	0.296	0.383	Non richiesto
0.030	0.301	0.391	Non richiesto
0.033	0.308	0.401	Non richiesto
0.036	0.314	0.411	Non richiesto
0.040	0.322	0.422	Non richiesto
0.044	0.330	0.435	Non richiesto
0.049	0.339	0.448	Non richiesto
0.053	0.349	0.464	Non richiesto
0.059	0.360	0.480	Non richiesto
0.065	0.373	0.499	Non richiesto
0.072	0.386	0.519	Non richiesto
0.079	0.401	0.542	Non richiesto
0.088	0.417	0.566	Non richiesto
0.097	0.436	0.594	Non richiesto
0.100	0.442	0.604	RSL <= NTC*1.3
0.107	0.456	0.624	RSL <= NTC*1.3
0.118	0.478	0.657	RSL <= NTC*1.3
0.130	0.502	0.694	RSL <= NTC*1.3
0.143	0.529	0.735	RSL <= NTC*1.3
0.152	0.546	0.760	RSL <= NTC*1.3
0.158	0.559	0.760	RSL <= NTC*1.3
0.175	0.592	0.760	RSL <= NTC*1.3
0.188	0.618	0.760	RSL <= NTC*1.3
0.193	0.618	0.760	RSL <= NTC*1.3
0.213	0.618	0.760	RSL <= NTC*1.3
0.235	0.618	0.760	RSL <= NTC*1.3
0.248	0.618	0.760	RSL <= NTC*1.3
0.259	0.618	0.760	RSL <= NTC*1.3
0.286	0.618	0.760	RSL <= NTC*1.3
0.316	0.618	0.760	RSL <= NTC*1.3
0.345	0.618	0.760	RSL <= NTC*1.3
0.349	0.618	0.760	RSL <= NTC*1.3
0.385	0.618	0.760	RSL <= NTC*1.3
0.425	0.618	0.760	RSL <= NTC*1.3
0.442	0.618	0.760	RSL <= NTC*1.3
0.455	0.618	0.760	RSL <= NTC*1.3
0.469	0.618	0.737	RSL <= NTC*1.3
0.517	0.618	0.668	RSL <= NTC*1.3
0.538	0.618	0.642	RSL <= NTC*1.3
0.563	0.618	0.614	RSL > NTC*1.3
0.571	0.609	0.605	RSL > NTC*1.3
0.630	0.552	0.549	RSL > NTC*1.3
0.635	0.547	0.544	RSL > NTC*1.3
0.695	0.500	0.497	RSL > NTC*1.3
0.700	0.497	0.494	RSL > NTC*1.3
0.732	0.475	0.472	Non richiesto
0.767	0.453	0.450	Non richiesto
0.829	0.420	0.417	Non richiesto
0.847	0.411	0.408	Non richiesto
0.925	0.376	0.373	Non richiesto
0.935	0.372	0.370	Non richiesto
1.022	0.340	0.338	Non richiesto
1.032	0.337	0.335	Non richiesto
1.119	0.311	0.309	Non richiesto
1.139	0.305	0.304	Non richiesto
1.215	0.286	0.284	Non richiesto
1.257	0.277	0.275	Non richiesto
1.312	0.265	0.263	Non richiesto
1.387	0.251	0.249	Non richiesto
1.409	0.247	0.245	Non richiesto
1.505	0.231	0.230	Non richiesto
1.531	0.227	0.226	Non richiesto
1.602	0.217	0.216	Non richiesto
1.689	0.206	0.205	Non richiesto
1.699	0.205	0.203	Non richiesto
1.796	0.194	0.192	Non richiesto
1.865	0.186	0.185	Non richiesto
1.892	0.184	0.183	Non richiesto
1.989	0.175	0.174	Non richiesto
2.058	0.169	0.168	Non richiesto
2.086	0.167	0.166	Non richiesto
2.182	0.159	0.158	Non richiesto
2.237	0.155	0.154	Non richiesto
2.271	0.153	0.150	Non richiesto
2.279	0.153	0.149	Non richiesto
2.376	0.146	0.137	Non richiesto
2.472	0.141	0.126	Non richiesto
2.507	0.139	0.123	Non richiesto
2.569	0.135	0.117	Non richiesto
2.626	0.130	0.112	Non richiesto
2.684	0.124	0.107	Non richiesto
2.741	0.119	0.103	Non richiesto
2.767	0.117	0.101	Non richiesto
2.798	0.114	0.099	Non richiesto
2.855	0.110	0.095	Non richiesto
2.913	0.105	0.091	Non richiesto
2.970	0.101	0.088	Non richiesto
3.027	0.097	0.084	Non richiesto
3.053	0.096	0.083	Non richiesto
3.084	0.094	0.081	Non richiesto

Viale Duca Alessandro n. 11 – 43123 Parma
Cell. 335 1403156 – E mail ing.concari@gmail.com
Sito web: studioaire.it – P.IVA 02561480340

Periodo	Se(t) RSL	Se(t) NTC*1.3	Confronto ord.55
3.142	0.091	0.078	Non richiesto
3.199	0.087	0.076	Non richiesto
3.256	0.084	0.073	Non richiesto
3.313	0.081	0.070	Non richiesto
3.370	0.079	0.068	Non richiesto
3.370	0.079	0.068	Non richiesto
3.428	0.076	0.066	Non richiesto
3.485	0.074	0.064	Non richiesto
3.542	0.071	0.062	Non richiesto
3.599	0.069	0.060	Non richiesto
3.657	0.067	0.058	Non richiesto
3.714	0.065	0.056	Non richiesto
3.719	0.065	0.056	Non richiesto
3.771	0.063	0.054	Non richiesto
3.828	0.061	0.053	Non richiesto
3.886	0.059	0.051	Non richiesto
3.943	0.057	0.050	Non richiesto
4.000	0.056	0.048	Non richiesto
4.105	0.053	0.046	Non richiesto
4.530	0.044	0.038	Non richiesto
5.000	0.036	0.031	Non richiesto

Confronto spettro RSL vs NTC (0.7 A)	
Esito confronto	Possibile l'uso dello spettro RSL

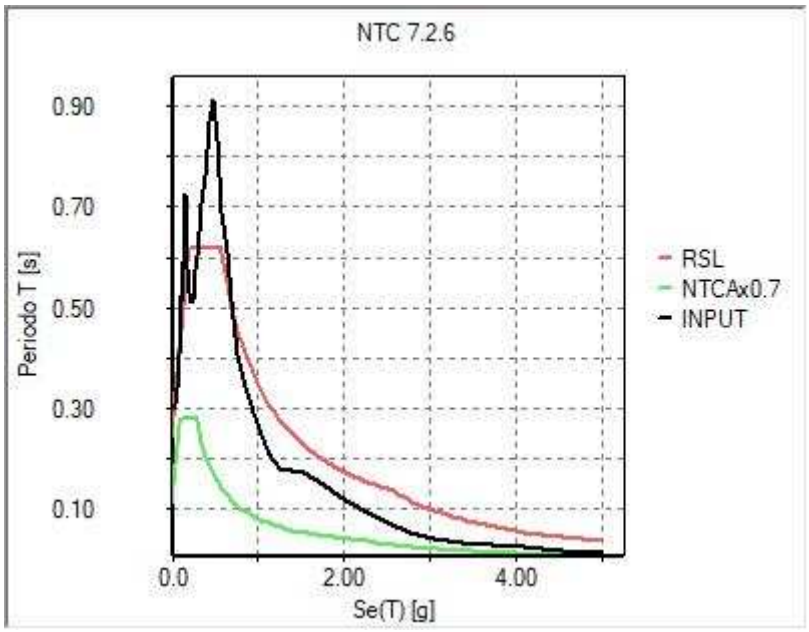

Fig. 2

Periodo	Se(t) RSL	Se(t) NTC*0.7 suolo tipo A	Confronto NTC
[s]	[g]	[g]	
0.000	0.242	0.111	RSL >= NTC_A*0.7
0.010	0.262	0.129	RSL >= NTC_A*0.7
0.011	0.264	0.131	RSL >= NTC_A*0.7
0.012	0.267	0.133	RSL >= NTC_A*0.7
0.013	0.269	0.135	RSL >= NTC_A*0.7
0.015	0.272	0.138	RSL >= NTC_A*0.7
0.016	0.275	0.140	RSL >= NTC_A*0.7
0.018	0.278	0.143	RSL >= NTC_A*0.7
0.020	0.282	0.147	RSL >= NTC_A*0.7
0.022	0.286	0.150	RSL >= NTC_A*0.7
0.024	0.291	0.154	RSL >= NTC_A*0.7
0.027	0.296	0.159	RSL >= NTC_A*0.7
0.030	0.301	0.164	RSL >= NTC_A*0.7
0.033	0.308	0.169	RSL >= NTC_A*0.7
0.036	0.314	0.175	RSL >= NTC_A*0.7
0.040	0.322	0.182	RSL >= NTC_A*0.7
0.044	0.330	0.189	RSL >= NTC_A*0.7
0.049	0.339	0.197	RSL >= NTC_A*0.7
0.053	0.349	0.206	RSL >= NTC_A*0.7
0.059	0.360	0.215	RSL >= NTC_A*0.7
0.065	0.373	0.226	RSL >= NTC_A*0.7
0.072	0.386	0.238	RSL >= NTC_A*0.7
0.079	0.401	0.251	RSL >= NTC_A*0.7

Viale Duca Alessandro n. 11 – 43123 Parma
Cell. 335 1403156 – E mail ing.concari@gmail.com
Sito web: studioaire.it – P.IVA 02561480340

Periodo	Se(t) RSL	Se(t) NTC*0.7 suolo tipo A	Confronto NTC
0.088	0.417	0.266	RSL >= NTC_A*0.7
0.096	0.434	0.280	RSL >= NTC_A*0.7
0.097	0.436	0.280	RSL >= NTC_A*0.7
0.107	0.456	0.280	RSL >= NTC_A*0.7
0.118	0.478	0.280	RSL >= NTC_A*0.7
0.130	0.502	0.280	RSL >= NTC_A*0.7
0.143	0.529	0.280	RSL >= NTC_A*0.7
0.158	0.559	0.280	RSL >= NTC_A*0.7
0.175	0.592	0.280	RSL >= NTC_A*0.7
0.188	0.618	0.280	RSL >= NTC_A*0.7
0.193	0.618	0.280	RSL >= NTC_A*0.7
0.195	0.618	0.280	RSL >= NTC_A*0.7
0.213	0.618	0.280	RSL >= NTC_A*0.7
0.235	0.618	0.280	RSL >= NTC_A*0.7
0.259	0.618	0.280	RSL >= NTC_A*0.7
0.286	0.618	0.280	RSL >= NTC_A*0.7
0.287	0.618	0.280	RSL >= NTC_A*0.7
0.294	0.618	0.274	RSL >= NTC_A*0.7
0.316	0.618	0.255	RSL >= NTC_A*0.7
0.349	0.618	0.231	RSL >= NTC_A*0.7
0.385	0.618	0.209	RSL >= NTC_A*0.7
0.392	0.618	0.205	RSL >= NTC_A*0.7
0.425	0.618	0.189	RSL >= NTC_A*0.7
0.469	0.618	0.172	RSL >= NTC_A*0.7
0.491	0.618	0.164	RSL >= NTC_A*0.7
0.517	0.618	0.155	RSL >= NTC_A*0.7
0.563	0.618	0.143	RSL >= NTC_A*0.7
0.571	0.609	0.141	RSL >= NTC_A*0.7
0.590	0.589	0.136	RSL >= NTC_A*0.7
0.630	0.552	0.128	RSL >= NTC_A*0.7
0.689	0.504	0.117	RSL >= NTC_A*0.7
0.695	0.500	0.116	RSL >= NTC_A*0.7
0.767	0.453	0.105	RSL >= NTC_A*0.7
0.788	0.441	0.102	RSL >= NTC_A*0.7
0.847	0.411	0.095	RSL >= NTC_A*0.7
0.887	0.392	0.091	RSL >= NTC_A*0.7
0.935	0.372	0.086	RSL >= NTC_A*0.7
0.986	0.353	0.082	RSL >= NTC_A*0.7
1.032	0.337	0.078	RSL >= NTC_A*0.7
1.085	0.320	0.074	RSL >= NTC_A*0.7
1.139	0.305	0.071	RSL >= NTC_A*0.7
1.184	0.294	0.068	RSL >= NTC_A*0.7
1.257	0.277	0.064	RSL >= NTC_A*0.7
1.283	0.271	0.063	RSL >= NTC_A*0.7
1.382	0.252	0.058	RSL >= NTC_A*0.7
1.387	0.251	0.058	RSL >= NTC_A*0.7
1.481	0.235	0.054	RSL >= NTC_A*0.7
1.531	0.227	0.053	RSL >= NTC_A*0.7
1.580	0.220	0.051	RSL >= NTC_A*0.7
1.679	0.207	0.048	RSL >= NTC_A*0.7
1.689	0.206	0.048	RSL >= NTC_A*0.7
1.778	0.196	0.045	RSL >= NTC_A*0.7
1.865	0.186	0.043	RSL >= NTC_A*0.7
1.877	0.185	0.043	RSL >= NTC_A*0.7
1.976	0.176	0.041	RSL >= NTC_A*0.7
2.058	0.169	0.039	RSL >= NTC_A*0.7
2.074	0.168	0.039	RSL >= NTC_A*0.7
2.173	0.160	0.037	RSL >= NTC_A*0.7
2.237	0.155	0.036	RSL >= NTC_A*0.7
2.271	0.153	0.035	RSL >= NTC_A*0.7
2.272	0.153	0.035	RSL >= NTC_A*0.7
2.371	0.147	0.032	RSL >= NTC_A*0.7
2.470	0.141	0.029	RSL >= NTC_A*0.7
2.507	0.139	0.029	RSL >= NTC_A*0.7
2.569	0.135	0.027	RSL >= NTC_A*0.7
2.626	0.130	0.026	RSL >= NTC_A*0.7
2.684	0.124	0.025	RSL >= NTC_A*0.7
2.741	0.119	0.024	RSL >= NTC_A*0.7
2.767	0.117	0.023	RSL >= NTC_A*0.7
2.798	0.114	0.023	RSL >= NTC_A*0.7
2.855	0.110	0.022	RSL >= NTC_A*0.7
2.913	0.105	0.021	RSL >= NTC_A*0.7
2.970	0.101	0.020	RSL >= NTC_A*0.7
3.027	0.097	0.020	RSL >= NTC_A*0.7
3.053	0.096	0.019	RSL >= NTC_A*0.7
3.084	0.094	0.019	RSL >= NTC_A*0.7
3.142	0.091	0.018	RSL >= NTC_A*0.7
3.199	0.087	0.018	RSL >= NTC_A*0.7
3.256	0.084	0.017	RSL >= NTC_A*0.7
3.313	0.081	0.016	RSL >= NTC_A*0.7
3.370	0.079	0.016	RSL >= NTC_A*0.7
3.370	0.079	0.016	RSL >= NTC_A*0.7
3.428	0.076	0.015	RSL >= NTC_A*0.7
3.485	0.074	0.015	RSL >= NTC_A*0.7
3.542	0.071	0.014	RSL >= NTC_A*0.7
3.599	0.069	0.014	RSL >= NTC_A*0.7
3.657	0.067	0.013	RSL >= NTC_A*0.7
3.714	0.065	0.013	RSL >= NTC_A*0.7
3.719	0.065	0.013	RSL >= NTC_A*0.7
3.771	0.063	0.013	RSL >= NTC_A*0.7
3.828	0.061	0.012	RSL >= NTC_A*0.7
3.886	0.059	0.012	RSL >= NTC_A*0.7
3.943	0.057	0.012	RSL >= NTC_A*0.7

Viale Duca Alessandro n. 11 – 43123 Parma
Cell. 335 1403156 – E mail ing.concari@gmail.com
Sito web: studioaire.it – P.IVA 02561480340

Periodo	Se(t) RSL	Se(t) NTC*0.7 suolo tipo A	Confronto NTC
4.000	0.056	0.011	RSL >= NTC_A*0.7
4.105	0.053	0.011	RSL >= NTC_A*0.7
4.530	0.044	0.009	RSL >= NTC_A*0.7
5.000	0.036	0.007	RSL >= NTC_A*0.7

Periodo di ritorno <Tr>	Esito confronto
30	Possibile l'uso dello spettro RSL
50	Possibile l'uso dello spettro RSL
72	Possibile l'uso dello spettro RSL
101	Possibile l'uso dello spettro RSL
140	Possibile l'uso dello spettro RSL
201	Possibile l'uso dello spettro RSL
475	Possibile l'uso dello spettro RSL
975	Possibile l'uso dello spettro RSL
2475	Possibile l'uso dello spettro RSL

RISULTATI ANALISI SISMICHE

MODELLO 1 SCALA ANTINCENDIO

CDC	Tipo	Sigla Id	Note
5	Edk	CDC=Ed (dinamico SLU) alfa=0.0 (ecc. +)	
			categoria suolo: C
			fattore di sito S = 1.000
			ordinata spettro (tratto Tb-Tc) = 0.706 g
			angolo di ingresso:0.0
			eccentricità aggiuntiva: positiva
			periodo proprio T1: 0.226 sec.
			fattore q: 1.000
			amplificazione ND (non dissipativi): 1.000
			fattore per spost. mu d: 1.000
			classe di duttilità CD: ND
			numero di modi considerati: 20
			combinaz. modale: CQC

Quota	M Sismica x g	Pos. GX	Pos. GY	E agg. X-X	E agg. Y-Y	Pos. KX	Pos. KY	(r/Ls)^2	rapp. ex/rx	rapp. ey/ry
cm	daN	cm	cm	cm	cm	cm	cm			
520.10	2484.25	132.23	338.83	0.0	-6.00	125.00	300.00	0.578	0.054	0.478
342.10	2850.43	125.00	-26.15	0.0	-6.00	125.00	0.0	0.907	0.0	0.322
164.10	3156.76	150.67	331.26	0.0	-6.00	125.00	300.00	0.578	0.190	0.385
35.00	602.62	60.00	60.00	0.0	0.0	60.00	60.00	3.000	0.0	0.0
Risulta	9094.06									

Modo	Frequenza	Periodo	Acc. Spettrale	M efficace X x g	%	M efficace Y x g	%	M efficace Z x g	%	Energia	Energia x v
	Hz	sec	g	daN		daN		daN			
1	2.896	0.345	0.706	347.16	3.8	63.32	0.7	1.12	1.24e-02	0.0	0.0
2	4.063	0.246	0.706	19.90	0.2	142.62	1.6	380.49	4.2	0.0	0.0
3	4.422	0.226	0.706	5702.48	62.7	63.78	0.7	1.22	1.34e-02	0.0	0.0
4	4.646	0.215	0.706	38.74	0.4	3.49	3.84e-02	7.39e-03	8.12e-05	0.0	0.0
5	4.712	0.212	0.706	25.23	0.3	91.40	1.0	0.81	8.86e-03	0.0	0.0
6	4.957	0.202	0.706	415.20	4.6	1489.89	16.4	12.56	0.1	0.0	0.0
7	6.120	0.163	0.644	39.39	0.4	3952.97	43.5	1.93	2.13e-02	0.0	0.0
8	8.368	0.120	0.545	569.07	6.3	540.66	5.9	6.13	6.74e-02	0.0	0.0
9	10.718	0.093	0.486	16.85	0.2	232.02	2.6	3.18	3.50e-02	0.0	0.0
10	11.592	0.086	0.470	18.71	0.2	16.89	0.2	596.22	6.6	0.0	0.0
11	12.028	0.083	0.463	633.39	7.0	712.88	7.8	17.66	0.2	0.0	0.0
12	14.067	0.071	0.436	62.14	0.7	16.70	0.2	9.01	9.91e-02	0.0	0.0
13	14.829	0.067	0.428	0.56	6.19e-03	0.68	7.52e-03	1088.90	12.0	0.0	0.0
14	16.391	0.061	0.413	89.16	1.0	48.56	0.5	0.09	1.02e-03	0.0	0.0
15	18.498	0.054	0.398	3.53	3.89e-02	62.51	0.7	1107.10	12.2	0.0	0.0
16	19.740	0.051	0.390	798.37	8.8	212.67	2.3	25.83	0.3	0.0	0.0
17	20.484	0.049	0.386	279.38	3.1	264.26	2.9	43.26	0.5	0.0	0.0
18	21.608	0.046	0.380	0.13	1.42e-03	28.89	0.3	2.29	2.52e-02	0.0	0.0
19	25.793	0.039	0.363	1.43	1.58e-02	19.44	0.2	3.91	4.29e-02	0.0	0.0
20	28.894	0.035	0.354	0.98	1.08e-02	45.77	0.5	589.65	6.5	0.0	0.0
Risulta				9061.81		8009.41		3891.38			
In percentuale				99.65		88.07		42.79			

CDC	Tipo	Sigla Id	Note
6	Edk	CDC=Ed (dinamico SLU) alfa=0.0 (ecc. -)	
			categoria suolo: C
			fattore di sito S = 1.000
			ordinata spettro (tratto Tb-Tc) = 0.706 g
			angolo di ingresso:0.0
			eccentricità aggiuntiva: negativa
			periodo proprio T1: 0.221 sec.
			fattore q: 1.000
			amplificazione ND (non dissipativi): 1.000
			fattore per spost. mu d: 1.000
			classe di duttilità CD: ND
			numero di modi considerati: 20

Viale Duca Alessandro n. 11 – 43123 Parma
Cell. 335 1403156 – E mail ing.concari@gmail.com
Sito web: studioaire.it – P.IVA 02561480340

CDC	Tipo	Sigla Id	Note
			combinaz. modale: CQC

Quota	M Sismica x g	Pos. GX	Pos. GY	E agg. X-X	E agg. Y-Y	Pos. KX	Pos. KY	(r/Ls)^2	rapp. ex/rx	rapp. ey/ry
cm	daN	cm	cm	cm	cm	cm	cm			
520.10	2484.25	132.23	338.83	0.0	6.00	125.00	300.00	0.578	0.054	0.478
342.10	2850.43	125.00	-26.15	0.0	6.00	125.00	0.0	0.907	0.0	0.322
164.10	3156.76	150.67	331.26	0.0	6.00	125.00	300.00	0.578	0.190	0.385
35.00	602.62	60.00	60.00	0.0	0.0	60.00	60.00	3.000	0.0	0.0
Risulta	9094.06									

Modo	Frequenza	Periodo	Acc. Spettrale	M efficace X x g	%	M efficace Y x g	%	M efficace Z x g	%	Energia	Energia x v
	Hz	sec	g	daN		daN		daN			
1	2.799	0.357	0.706	697.67	7.7	57.63	0.6	0.93	1.02e-02	0.0	0.0
2	4.065	0.246	0.706	44.39	0.5	136.44	1.5	382.59	4.2	0.0	0.0
3	4.529	0.221	0.706	4596.50	50.5	235.60	2.6	3.95	4.35e-02	0.0	0.0
4	4.647	0.215	0.706	0.25	2.77e-03	1.63	1.79e-02	0.09	1.03e-03	0.0	0.0
5	4.741	0.211	0.706	237.60	2.6	1.98e-03	2.18e-05	0.06	6.62e-04	0.0	0.0
6	5.163	0.194	0.706	1015.37	11.2	1885.05	20.7	8.59	9.45e-02	0.0	0.0
7	6.108	0.164	0.645	27.12	0.3	3436.17	37.8	1.69	1.86e-02	0.0	0.0
8	7.788	0.128	0.565	874.23	9.6	134.88	1.5	4.28	4.71e-02	0.0	0.0
9	10.499	0.095	0.490	261.31	2.9	1259.22	13.8	12.39	0.1	0.0	0.0
10	11.612	0.086	0.470	2.03	2.24e-02	7.32	8.05e-02	606.12	6.7	0.0	0.0
11	12.375	0.081	0.458	178.87	2.0	135.97	1.5	0.14	1.55e-03	0.0	0.0
12	13.710	0.073	0.440	20.33	0.2	14.30	0.2	3.59	3.95e-02	0.0	0.0
13	14.825	0.067	0.428	0.71	7.83e-03	0.07	8.01e-04	1094.17	12.0	0.0	0.0
14	16.003	0.062	0.417	57.84	0.6	68.21	0.8	0.10	1.07e-03	0.0	0.0
15	18.496	0.054	0.398	1.10	1.21e-02	62.55	0.7	1108.88	12.2	0.0	0.0
16	20.142	0.050	0.388	137.99	1.5	459.10	5.0	61.38	0.7	0.0	0.0
17	21.154	0.047	0.382	893.88	9.8	21.57	0.2	6.46	7.11e-02	0.0	0.0
18	21.609	0.046	0.380	2.30	2.53e-02	27.95	0.3	2.50	2.75e-02	0.0	0.0
19	25.736	0.039	0.363	2.52	2.77e-02	18.81	0.2	3.40	3.74e-02	0.0	0.0
20	28.870	0.035	0.354	1.90	2.09e-02	45.90	0.5	576.50	6.3	0.0	0.0
Risulta				9053.93		8008.40		3877.81			
In percentuale				99.56		88.06		42.64			

CDC	Tipo	Sigla Id	Note
7	Edk	CDC=Ed (dinamico SLU) alfa=90.00 (ecc. +)	
			categoria suolo: C
			fattore di sito S = 1.000
			ordinata spettro (tratto Tb-Tc) = 0.706 g
			angolo di ingresso:90.00
			eccentricità aggiuntiva: positiva
			periodo proprio T1: 0.157 sec.
			fattore q: 1.000
			amplificazione ND (non dissipativi): 1.000
			fattore per spost. mu d: 1.000
			classe di duttilità CD: ND
			numero di modi considerati: 20
			combinaz. modale: CQC

Quota	M Sismica x g	Pos. GX	Pos. GY	E agg. X-X	E agg. Y-Y	Pos. KX	Pos. KY	(r/Ls)^2	rapp. ex/rx	rapp. ey/ry
cm	daN	cm	cm	cm	cm	cm	cm			
520.10	2484.25	132.23	338.83	17.50	0.0	125.00	300.00	0.578	0.054	0.478
342.10	2850.43	125.00	-26.15	13.50	0.0	125.00	0.0	0.907	0.0	0.322
164.10	3156.76	150.67	331.26	17.50	0.0	125.00	300.00	0.578	0.190	0.385
35.00	602.62	60.00	60.00	6.00	0.0	60.00	60.00	3.000	0.0	0.0
Risulta	9094.06									

Modo	Frequenza	Periodo	Acc. Spettrale	M efficace X x g	%	M efficace Y x g	%	M efficace Z x g	%	Energia	Energia x v
	Hz	sec	g	daN		daN		daN			
1	2.747	0.364	0.706	423.18	4.7	315.73	3.5	1.28	1.41e-02	0.0	0.0
2	4.063	0.246	0.706	110.96	1.2	142.58	1.6	372.37	4.1	0.0	0.0
3	4.401	0.227	0.706	4471.40	49.2	429.17	4.7	13.48	0.1	0.0	0.0
4	4.645	0.215	0.706	61.36	0.7	0.41	4.51e-03	0.08	8.49e-04	0.0	0.0
5	4.724	0.212	0.706	3.84	4.23e-02	5.05e-03	5.55e-05	0.07	7.29e-04	0.0	0.0
6	4.969	0.201	0.706	1521.87	16.7	1056.47	11.6	9.28	0.1	0.0	0.0
7	6.361	0.157	0.630	0.48	5.31e-03	4227.57	46.5	0.92	1.01e-02	0.0	0.0
8	7.726	0.129	0.567	614.47	6.8	198.30	2.2	5.51	6.06e-02	0.0	0.0
9	10.501	0.095	0.490	258.94	2.8	860.72	9.5	6.99	7.69e-02	0.0	0.0
10	11.607	0.086	0.470	3.61	3.97e-02	1.15e-03	1.27e-05	597.43	6.6	0.0	0.0
11	11.739	0.085	0.468	401.65	4.4	209.16	2.3	14.18	0.2	0.0	0.0
12	13.623	0.073	0.441	16.10	0.2	48.37	0.5	5.05	5.56e-02	0.0	0.0
13	14.827	0.067	0.428	0.41	4.50e-03	0.24	2.66e-03	1089.46	12.0	0.0	0.0
14	16.390	0.061	0.413	75.46	0.8	56.03	0.6	0.01	1.30e-04	0.0	0.0
15	18.500	0.054	0.398	4.62	5.08e-02	80.38	0.9	1103.40	12.1	0.0	0.0
16	19.871	0.050	0.389	698.43	7.7	202.24	2.2	42.96	0.5	0.0	0.0
17	20.594	0.049	0.385	355.85	3.9	207.59	2.3	38.58	0.4	0.0	0.0
18	21.610	0.046	0.380	0.66	7.22e-03	25.47	0.3	1.75	1.92e-02	0.0	0.0
19	23.865	0.042	0.370	5.33	5.86e-02	20.25	0.2	0.08	8.28e-04	0.0	0.0
20	28.231	0.035	0.356	38.58	0.4	2.25	2.48e-02	90.54	1.0	0.0	0.0
Risulta				9067.21		8082.94		3393.42			
In percentuale				99.70		88.88		37.31			

Viale Duca Alessandro n. 11 – 43123 Parma
Cell. 335 1403156 – E mail ing.concari@gmail.com
Sito web: studioaire.it – P.IVA 02561480340

CDC	Tipo	Sigla Id	Note
8	Edk	CDC=Ed (dinamico SLU) alfa=90.00 (ecc. -)	
			categoria suolo: C
			fattore di sito S = 1.000
			ordinata spettro (tratto Tb-Tc) = 0.706 g
			angolo di ingresso:90.00
			eccentricità aggiuntiva: negativa
			periodo proprio T1: 0.169 sec.
			fattore q: 1.000
			amplificazione ND (non dissipativi): 1.000
			fattore per spost. mu d: 1.000
			classe di duttilità CD: ND
			numero di modi considerati: 20
			combinaz. modale: CQC

Quota	M Sismica x g	Pos. GX	Pos. GY	E agg. X-X	E agg. Y-Y	Pos. KX	Pos. KY	(r/Ls)^2	rapp. ex/rx	rapp. ey/ry
cm	daN	cm	cm	cm	cm	cm	cm			
520.10	2484.25	132.23	338.83	-17.50	0.0	125.00	300.00	0.578	0.054	0.478
342.10	2850.43	125.00	-26.15	-13.50	0.0	125.00	0.0	0.907	0.0	0.322
164.10	3156.76	150.67	331.26	-17.50	0.0	125.00	300.00	0.578	0.190	0.385
35.00	602.62	60.00	60.00	-6.00	0.0	60.00	60.00	3.000	0.0	0.0
Risulta	9094.06									

Modo	Frequenza	Periodo	Acc. Spettrale	M efficace X x g	%	M efficace Y x g	%	M efficace Z x g	%	Energia	Energia x v
	Hz	sec	g	daN		daN		daN			
1	2.935	0.341	0.706	611.04	6.7	10.42	0.1	0.64	7.04e-03	0.0	0.0
2	4.066	0.246	0.706	1.97	2.17e-02	129.42	1.4	386.84	4.3	0.0	0.0
3	4.529	0.221	0.706	5637.32	62.0	2.80	3.08e-02	0.06	6.95e-04	0.0	0.0
4	4.647	0.215	0.706	0.53	5.78e-03	7.09	7.79e-02	0.03	2.79e-04	0.0	0.0
5	4.720	0.212	0.706	114.83	1.3	104.98	1.2	0.70	7.73e-03	0.0	0.0
6	5.310	0.188	0.700	130.74	1.4	1973.03	21.7	7.60	8.35e-02	0.0	0.0
7	5.915	0.169	0.657	126.56	1.4	3386.96	37.2	2.47	2.72e-02	0.0	0.0
8	8.528	0.117	0.540	865.11	9.5	225.16	2.5	4.77	5.24e-02	0.0	0.0
9	10.760	0.093	0.485	58.62	0.6	638.39	7.0	11.09	0.1	0.0	0.0
10	11.600	0.086	0.470	2.01	2.22e-02	1.53	1.69e-02	600.59	6.6	0.0	0.0
11	12.247	0.082	0.460	334.46	3.7	682.44	7.5	6.05	6.65e-02	0.0	0.0
12	14.132	0.071	0.435	35.37	0.4	0.06	6.09e-04	3.97	4.37e-02	0.0	0.0
13	14.828	0.067	0.428	1.25	1.38e-02	0.73	8.01e-03	1101.36	12.1	0.0	0.0
14	16.015	0.062	0.417	79.10	0.9	46.87	0.5	0.41	4.49e-03	0.0	0.0
15	18.504	0.054	0.398	1.17	1.29e-02	40.98	0.5	1107.69	12.2	0.0	0.0
16	20.040	0.050	0.388	228.19	2.5	515.02	5.7	42.50	0.5	0.0	0.0
17	20.852	0.048	0.384	840.78	9.2	44.07	0.5	11.32	0.1	0.0	0.0
18	21.602	0.046	0.380	0.26	2.90e-03	30.86	0.3	3.22	3.54e-02	0.0	0.0
19	27.961	0.036	0.356	0.87	9.55e-03	63.74	0.7	164.82	1.8	0.0	0.0
20	29.363	0.034	0.353	1.97e-04	2.16e-06	28.13	0.3	537.14	5.9	0.0	0.0
Risulta				9070.20		7932.67		3993.27			
In percentuale				99.74		87.23		43.91			

CDC	Tipo	Sigla Id	Note
9	Edk	CDC=Ed (dinamico SLD) alfa=0.0 (ecc. +)	
			categoria suolo: C
			fattore di sito S = 1.000
			ordinata spettro (tratto Tb-Tc) = 0.310 g
			angolo di ingresso:0.0
			eccentricità aggiuntiva: positiva
			periodo proprio T1: 0.226 sec.
			numero di modi considerati: 20
			combinaz. modale: CQC

Quota	M Sismica x g	Pos. GX	Pos. GY	E agg. X-X	E agg. Y-Y	Pos. KX	Pos. KY	(r/Ls)^2	rapp. ex/rx	rapp. ey/ry
cm	daN	cm	cm	cm	cm	cm	cm			
520.10	2484.25	132.23	338.83	0.0	-6.00	125.00	300.00	0.578	0.054	0.478
342.10	2850.43	125.00	-26.15	0.0	-6.00	125.00	0.0	0.907	0.0	0.322
164.10	3156.76	150.67	331.26	0.0	-6.00	125.00	300.00	0.578	0.190	0.385
35.00	602.62	60.00	60.00	0.0	0.0	60.00	60.00	3.000	0.0	0.0
Risulta	9094.06									

Modo	Frequenza	Periodo	Acc. Spettrale	M efficace X x g	%	M efficace Y x g	%	M efficace Z x g	%	Energia	Energia x v
	Hz	sec	g	daN		daN		daN			
1	2.896	0.345	0.310	347.16	3.8	63.32	0.7	1.12	1.24e-02	0.0	0.0
2	4.063	0.246	0.310	19.90	0.2	142.62	1.6	380.49	4.2	0.0	0.0
3	4.422	0.226	0.310	5702.48	62.7	63.78	0.7	1.22	1.34e-02	0.0	0.0
4	4.646	0.215	0.310	38.74	0.4	3.49	3.84e-02	7.39e-03	8.12e-05	0.0	0.0
5	4.712	0.212	0.310	25.23	0.3	91.40	1.0	0.81	8.86e-03	0.0	0.0
6	4.957	0.202	0.310	415.20	4.6	1489.89	16.4	12.56	0.1	0.0	0.0
7	6.120	0.163	0.302	39.39	0.4	3952.97	43.5	1.93	2.13e-02	0.0	0.0
8	8.368	0.120	0.254	569.07	6.3	540.66	5.9	6.13	6.74e-02	0.0	0.0
9	10.718	0.093	0.225	16.85	0.2	232.02	2.6	3.18	3.50e-02	0.0	0.0
10	11.592	0.086	0.217	18.71	0.2	16.89	0.2	596.22	6.6	0.0	0.0
11	12.028	0.083	0.214	633.39	7.0	712.88	7.8	17.66	0.2	0.0	0.0
12	14.067	0.071	0.201	62.14	0.7	16.70	0.2	9.01	9.91e-02	0.0	0.0
13	14.829	0.067	0.197	0.56	6.19e-03	0.68	7.52e-03	1088.90	12.0	0.0	0.0
14	16.391	0.061	0.190	89.16	1.0	48.56	0.5	0.09	1.02e-03	0.0	0.0
15	18.498	0.054	0.182	3.53	3.89e-02	62.51	0.7	1107.10	12.2	0.0	0.0
16	19.740	0.051	0.178	798.37	8.8	212.67	2.3	25.83	0.3	0.0	0.0
17	20.484	0.049	0.176	279.38	3.1	264.26	2.9	43.26	0.5	0.0	0.0
18	21.608	0.046	0.174	0.13	1.42e-03	28.89	0.3	2.29	2.52e-02	0.0	0.0
19	25.793	0.039	0.166	1.43	1.58e-02	19.44	0.2	3.91	4.29e-02	0.0	0.0

Viale Duca Alessandro n. 11 – 43123 Parma
Cell. 335 1403156 – E mail ing.concari@gmail.com
Sito web: studioaire.it – P.IVA 02561480340

Modo	Frequenza	Periodo	Acc. Spettrale	M efficace X x g	%	M efficace Y x g	%	M efficace Z x g	%	Energia	Energia x v
20	28.894	0.035	0.161	0.98	1.08e-02	45.77	0.5	589.65	6.5	0.0	0.0
Risulta				9061.81		8009.41		3891.38			
In percentuale				99.65		88.07		42.79			

CDC	Tipo	Sigla Id	Note
10	Edk	CDC=Ed (dinamico SLD) alfa=0.0 (ecc. -)	
			categoria suolo: C
			fattore di sito S = 1.000
			ordinata spettro (tratto Tb-Tc) = 0.310 g
			angolo di ingresso:0.0
			eccentricità aggiuntiva: negativa
			periodo proprio T1: 0.221 sec.
			numero di modi considerati: 20
			combinaz. modale: CQC

Quota	M Sismica x g	Pos. GX	Pos. GY	E agg. X-X	E agg. Y-Y	Pos. KX	Pos. KY	(r/Ls)^2	rapp. ex/rx	rapp. ey/ry
cm	daN	cm	cm	cm	cm	cm	cm			
520.10	2484.25	132.23	338.83	0.0	6.00	125.00	300.00	0.578	0.054	0.478
342.10	2850.43	125.00	-26.15	0.0	6.00	125.00	0.0	0.907	0.0	0.322
164.10	3156.76	150.67	331.26	0.0	6.00	125.00	300.00	0.578	0.190	0.385
35.00	602.62	60.00	60.00	0.0	0.0	60.00	60.00	3.000	0.0	0.0
Risulta	9094.06									

Modo	Frequenza	Periodo	Acc. Spettrale	M efficace X x g	%	M efficace Y x g	%	M efficace Z x g	%	Energia	Energia x v
	Hz	sec	g	daN		daN		daN			
1	2.799	0.357	0.310	697.67	7.7	57.63	0.6	0.93	1.02e-02	0.0	0.0
2	4.065	0.246	0.310	44.39	0.5	136.44	1.5	382.59	4.2	0.0	0.0
3	4.529	0.221	0.310	4596.50	50.5	235.60	2.6	3.95	4.35e-02	0.0	0.0
4	4.647	0.215	0.310	0.25	2.77e-03	1.63	1.79e-02	0.09	1.03e-03	0.0	0.0
5	4.741	0.211	0.310	237.60	2.6	1.98e-03	2.18e-05	0.06	6.62e-04	0.0	0.0
6	5.163	0.194	0.310	1015.37	11.2	1885.05	20.7	8.59	9.45e-02	0.0	0.0
7	6.108	0.164	0.302	27.12	0.3	3436.17	37.8	1.69	1.86e-02	0.0	0.0
8	7.788	0.128	0.263	874.23	9.6	134.88	1.5	4.28	4.71e-02	0.0	0.0
9	10.499	0.095	0.227	261.31	2.9	1259.22	13.8	12.39	0.1	0.0	0.0
10	11.612	0.086	0.217	2.03	2.24e-02	7.32	8.05e-02	606.12	6.7	0.0	0.0
11	12.375	0.081	0.211	178.87	2.0	135.97	1.5	0.14	1.55e-03	0.0	0.0
12	13.710	0.073	0.203	20.33	0.2	14.30	0.2	3.59	3.95e-02	0.0	0.0
13	14.825	0.067	0.197	0.71	7.83e-03	0.07	8.01e-04	1094.17	12.0	0.0	0.0
14	16.003	0.062	0.191	57.84	0.6	68.21	0.8	0.10	1.07e-03	0.0	0.0
15	18.496	0.054	0.182	1.10	1.21e-02	62.55	0.7	1108.88	12.2	0.0	0.0
16	20.142	0.050	0.177	137.99	1.5	459.10	5.0	61.38	0.7	0.0	0.0
17	21.154	0.047	0.175	893.88	9.8	21.57	0.2	6.46	7.11e-02	0.0	0.0
18	21.609	0.046	0.174	2.30	2.53e-02	27.95	0.3	2.50	2.75e-02	0.0	0.0
19	25.736	0.039	0.166	2.52	2.77e-02	18.81	0.2	3.40	3.74e-02	0.0	0.0
20	28.870	0.035	0.161	1.90	2.09e-02	45.90	0.5	576.50	6.3	0.0	0.0
Risulta				9053.93		8008.40		3877.81			
In percentuale				99.56		88.06		42.64			

CDC	Tipo	Sigla Id	Note
11	Edk	CDC=Ed (dinamico SLD) alfa=90.00 (ecc. +)	
			categoria suolo: C
			fattore di sito S = 1.000
			ordinata spettro (tratto Tb-Tc) = 0.310 g
			angolo di ingresso:90.00
			eccentricità aggiuntiva: positiva
			periodo proprio T1: 0.157 sec.
			numero di modi considerati: 20
			combinaz. modale: CQC

Quota	M Sismica x g	Pos. GX	Pos. GY	E agg. X-X	E agg. Y-Y	Pos. KX	Pos. KY	(r/Ls)^2	rapp. ex/rx	rapp. ey/ry
cm	daN	cm	cm	cm	cm	cm	cm			
520.10	2484.25	132.23	338.83	17.50	0.0	125.00	300.00	0.578	0.054	0.478
342.10	2850.43	125.00	-26.15	13.50	0.0	125.00	0.0	0.907	0.0	0.322
164.10	3156.76	150.67	331.26	17.50	0.0	125.00	300.00	0.578	0.190	0.385
35.00	602.62	60.00	60.00	6.00	0.0	60.00	60.00	3.000	0.0	0.0
Risulta	9094.06									

Modo	Frequenza	Periodo	Acc. Spettrale	M efficace X x g	%	M efficace Y x g	%	M efficace Z x g	%	Energia	Energia x v
	Hz	sec	g	daN		daN		daN			
1	2.747	0.364	0.310	423.18	4.7	315.73	3.5	1.28	1.41e-02	0.0	0.0
2	4.063	0.246	0.310	110.96	1.2	142.58	1.6	372.37	4.1	0.0	0.0
3	4.401	0.227	0.310	4471.40	49.2	429.17	4.7	13.48	0.1	0.0	0.0
4	4.645	0.215	0.310	61.36	0.7	0.41	4.51e-03	0.08	8.49e-04	0.0	0.0
5	4.724	0.212	0.310	3.84	4.23e-02	5.05e-03	5.55e-05	0.07	7.29e-04	0.0	0.0
6	4.969	0.201	0.310	1521.87	16.7	1056.47	11.6	9.28	0.1	0.0	0.0
7	6.361	0.157	0.295	0.48	5.31e-03	4227.57	46.5	0.92	1.01e-02	0.0	0.0
8	7.726	0.129	0.264	614.47	6.8	198.30	2.2	5.51	6.06e-02	0.0	0.0
9	10.501	0.095	0.227	258.94	2.8	860.72	9.5	6.99	7.69e-02	0.0	0.0
10	11.607	0.086	0.217	3.61	3.97e-02	1.15e-03	1.27e-05	597.43	6.6	0.0	0.0
11	11.739	0.085	0.216	401.65	4.4	209.16	2.3	14.18	0.2	0.0	0.0
12	13.623	0.073	0.203	16.10	0.2	48.37	0.5	5.05	5.56e-02	0.0	0.0
13	14.827	0.067	0.197	0.41	4.50e-03	0.24	2.66e-03	1089.46	12.0	0.0	0.0
14	16.390	0.061	0.190	75.46	0.8	56.03	0.6	0.01	1.30e-04	0.0	0.0
15	18.500	0.054	0.182	4.62	5.08e-02	80.38	0.9	1103.40	12.1	0.0	0.0
16	19.871	0.050	0.178	698.43	7.7	202.24	2.2	42.96	0.5	0.0	0.0
17	20.594	0.049	0.176	355.85	3.9	207.59	2.3	38.58	0.4	0.0	0.0

Viale Duca Alessandro n. 11 – 43123 Parma
Cell. 335 1403156 – E mail ing.concari@gmail.com
Sito web: studioaire.it – P.IVA 02561480340

Modo	Frequenza	Periodo	Acc. Spettrale	M efficace X x g	%	M efficace Y x g	%	M efficace Z x g	%	Energia	Energia x v
18	21.610	0.046	0.174	0.66	7.22e-03	25.47	0.3	1.75	1.92e-02	0.0	0.0
19	23.865	0.042	0.169	5.33	5.86e-02	20.25	0.2	0.08	8.28e-04	0.0	0.0
20	28.231	0.035	0.162	38.58	0.4	2.25	2.48e-02	90.54	1.0	0.0	0.0
Risulta				9067.21		8082.94		3393.42			
In percentuale				99.70		88.88		37.31			

CDC	Tipo	Sigla Id	Note
12	Edk	CDC=Ed (dinamico SLD) alfa=90.00 (ecc. -)	
			categoria suolo: C
			fattore di sito S = 1.000
			ordinata spettro (tratto Tb-Tc) = 0.310 g
			angolo di ingresso:90.00
			eccentricità aggiuntiva: negativa
			periodo proprio T1: 0.169 sec.
			numero di modi considerati: 20
			combinaz. modale: CQC

Quota	M Sismica x g	Pos. GX	Pos. GY	E agg. X-X	E agg. Y-Y	Pos. KX	Pos. KY	(r/Ls)^2	rapp. ex/rx	rapp. ey/ry
cm	daN	cm	cm	cm	cm	cm	cm			
520.10	2484.25	132.23	338.83	-17.50	0.0	125.00	300.00	0.578	0.054	0.478
342.10	2850.43	125.00	-26.15	-13.50	0.0	125.00	0.0	0.907	0.0	0.322
164.10	3156.76	150.67	331.26	-17.50	0.0	125.00	300.00	0.578	0.190	0.385
35.00	602.62	60.00	60.00	-6.00	0.0	60.00	60.00	3.000	0.0	0.0
Risulta	9094.06									

Modo	Frequenza	Periodo	Acc. Spettrale	M efficace X x g	%	M efficace Y x g	%	M efficace Z x g	%	Energia	Energia x v
	Hz	sec	g	daN		daN		daN			
1	2.935	0.341	0.310	611.04	6.7	10.42	0.1	0.64	7.04e-03	0.0	0.0
2	4.066	0.246	0.310	1.97	2.17e-02	129.42	1.4	386.84	4.3	0.0	0.0
3	4.529	0.221	0.310	5637.32	62.0	2.80	3.08e-02	0.06	6.95e-04	0.0	0.0
4	4.647	0.215	0.310	0.53	5.78e-03	7.09	7.79e-02	0.03	2.79e-04	0.0	0.0
5	4.720	0.212	0.310	114.83	1.3	104.98	1.2	0.70	7.73e-03	0.0	0.0
6	5.310	0.188	0.310	130.74	1.4	1973.03	21.7	7.60	8.35e-02	0.0	0.0
7	5.915	0.169	0.308	126.56	1.4	3386.96	37.2	2.47	2.72e-02	0.0	0.0
8	8.528	0.117	0.251	865.11	9.5	225.16	2.5	4.77	5.24e-02	0.0	0.0
9	10.760	0.093	0.225	58.62	0.6	638.39	7.0	11.09	0.1	0.0	0.0
10	11.600	0.086	0.217	2.01	2.22e-02	1.53	1.69e-02	600.59	6.6	0.0	0.0
11	12.247	0.082	0.212	334.46	3.7	682.44	7.5	6.05	6.65e-02	0.0	0.0
12	14.132	0.071	0.200	35.37	0.4	0.06	6.09e-04	3.97	4.37e-02	0.0	0.0
13	14.828	0.067	0.197	1.25	1.38e-02	0.73	8.01e-03	1101.36	12.1	0.0	0.0
14	16.015	0.062	0.191	79.10	0.9	46.87	0.5	0.41	4.49e-03	0.0	0.0
15	18.504	0.054	0.182	1.17	1.29e-02	40.98	0.5	1107.69	12.2	0.0	0.0
16	20.040	0.050	0.178	228.19	2.5	515.02	5.7	42.50	0.5	0.0	0.0
17	20.852	0.048	0.176	840.78	9.2	44.07	0.5	11.32	0.1	0.0	0.0
18	21.602	0.046	0.174	0.26	2.90e-03	30.86	0.3	3.22	3.54e-02	0.0	0.0
19	27.961	0.036	0.162	0.87	9.55e-03	63.74	0.7	164.82	1.8	0.0	0.0
20	29.363	0.034	0.160	1.97e-04	2.16e-06	28.13	0.3	537.14	5.9	0.0	0.0
Risulta				9070.20		7932.67		3993.27			
In percentuale				99.74		87.23		43.91			

CDC	Tipo	Sigla Id	Note
17	Edk	CDC=Ed (dinamico SLO) alfa=0.0 (ecc. +)	
			categoria suolo: C
			fattore di sito S = 1.000
			ordinata spettro (tratto Tb-Tc) = 0.250 g
			angolo di ingresso:0.0
			eccentricità aggiuntiva: positiva
			periodo proprio T1: 0.226 sec.
			numero di modi considerati: 20
			combinaz. modale: CQC

Quota	M Sismica x g	Pos. GX	Pos. GY	E agg. X-X	E agg. Y-Y	Pos. KX	Pos. KY	(r/Ls)^2	rapp. ex/rx	rapp. ey/ry
cm	daN	cm	cm	cm	cm	cm	cm			
520.10	2484.25	132.23	338.83	0.0	-6.00	125.00	300.00	0.578	0.054	0.478
342.10	2850.43	125.00	-26.15	0.0	-6.00	125.00	0.0	0.907	0.0	0.322
164.10	3156.76	150.67	331.26	0.0	-6.00	125.00	300.00	0.578	0.190	0.385
35.00	602.62	60.00	60.00	0.0	0.0	60.00	60.00	3.000	0.0	0.0
Risulta	9094.06									

Modo	Frequenza	Periodo	Acc. Spettrale	M efficace X x g	%	M efficace Y x g	%	M efficace Z x g	%	Energia	Energia x v
	Hz	sec	g	daN		daN		daN			
1	2.896	0.345	0.250	347.16	3.8	63.32	0.7	1.12	1.24e-02	0.0	0.0
2	4.063	0.246	0.250	19.90	0.2	142.62	1.6	380.49	4.2	0.0	0.0
3	4.422	0.226	0.250	5702.48	62.7	63.78	0.7	1.22	1.34e-02	0.0	0.0
4	4.646	0.215	0.250	38.74	0.4	3.49	3.84e-02	7.39e-03	8.12e-05	0.0	0.0
5	4.712	0.212	0.250	25.23	0.3	91.40	1.0	0.81	8.86e-03	0.0	0.0
6	4.957	0.202	0.250	415.20	4.6	1489.89	16.4	12.56	0.1	0.0	0.0
7	6.120	0.163	0.246	39.39	0.4	3952.97	43.5	1.93	2.13e-02	0.0	0.0
8	8.368	0.120	0.207	569.07	6.3	540.66	5.9	6.13	6.74e-02	0.0	0.0
9	10.718	0.093	0.183	16.85	0.2	232.02	2.6	3.18	3.50e-02	0.0	0.0
10	11.592	0.086	0.177	18.71	0.2	16.89	0.2	596.22	6.6	0.0	0.0
11	12.028	0.083	0.174	633.39	7.0	712.88	7.8	17.66	0.2	0.0	0.0
12	14.067	0.071	0.164	62.14	0.7	16.70	0.2	9.01	9.91e-02	0.0	0.0
13	14.829	0.067	0.160	0.56	6.19e-03	0.68	7.52e-03	1088.90	12.0	0.0	0.0
14	16.391	0.061	0.155	89.16	1.0	48.56	0.5	0.09	1.02e-03	0.0	0.0
15	18.498	0.054	0.148	3.53	3.89e-02	62.51	0.7	1107.10	12.2	0.0	0.0

Viale Duca Alessandro n. 11 – 43123 Parma
Cell. 335 1403156 – E mail ing.concari@gmail.com
Sito web: studioaire.it – P.IVA 02561480340

Modo	Frequenza	Periodo	Acc. Spettrale	M efficace X x g	%	M efficace Y x g	%	M efficace Z x g	%	Energia	Energia x v
16	19.740	0.051	0.145	798.37	8.8	212.67	2.3	25.83	0.3	0.0	0.0
17	20.484	0.049	0.144	279.38	3.1	264.26	2.9	43.26	0.5	0.0	0.0
18	21.608	0.046	0.141	0.13	1.42e-03	28.89	0.3	2.29	2.52e-02	0.0	0.0
19	25.793	0.039	0.135	1.43	1.58e-02	19.44	0.2	3.91	4.29e-02	0.0	0.0
20	28.894	0.035	0.131	0.98	1.08e-02	45.77	0.5	589.65	6.5	0.0	0.0
Risulta				9061.81		8009.41		3891.38			
In percentuale				99.65		88.07		42.79			

CDC	Tipo	Sigla Id	Note
18	Edk	CDC=Ed (dinamico SLO) alfa=0.0 (ecc. -)	
			categoria suolo: C
			fattore di sito S = 1.000
			ordinata spettro (tratto Tb-Tc) = 0.250 g
			angolo di ingresso:0.0
			eccentricità aggiuntiva: negativa
			periodo proprio T1: 0.221 sec.
			numero di modi considerati: 20
			combinaz. modale: CQC

Quota	M Sismica x g	Pos. GX	Pos. GY	E agg. X-X	E agg. Y-Y	Pos. KX	Pos. KY	(r/Ls)^2	rapp. ex/rx	rapp. ey/ry
cm	daN	cm	cm	cm	cm	cm	cm			
520.10	2484.25	132.23	338.83	0.0	6.00	125.00	300.00	0.578	0.054	0.478
342.10	2850.43	125.00	-26.15	0.0	6.00	125.00	0.0	0.907	0.0	0.322
164.10	3156.76	150.67	331.26	0.0	6.00	125.00	300.00	0.578	0.190	0.385
35.00	602.62	60.00	60.00	0.0	0.0	60.00	60.00	3.000	0.0	0.0
Risulta	9094.06									

Modo	Frequenza	Periodo	Acc. Spettrale	M efficace X x g	%	M efficace Y x g	%	M efficace Z x g	%	Energia	Energia x v
	Hz	sec	g	daN		daN		daN			
1	2.799	0.357	0.250	697.67	7.7	57.63	0.6	0.93	1.02e-02	0.0	0.0
2	4.065	0.246	0.250	44.39	0.5	136.44	1.5	382.59	4.2	0.0	0.0
3	4.529	0.221	0.250	4596.50	50.5	235.60	2.6	3.95	4.35e-02	0.0	0.0
4	4.647	0.215	0.250	0.25	2.77e-03	1.63	1.79e-02	0.09	1.03e-03	0.0	0.0
5	4.741	0.211	0.250	237.60	2.6	1.98e-03	2.18e-05	0.06	6.62e-04	0.0	0.0
6	5.163	0.194	0.250	1015.37	11.2	1885.05	20.7	8.59	9.45e-02	0.0	0.0
7	6.108	0.164	0.247	27.12	0.3	3436.17	37.8	1.69	1.86e-02	0.0	0.0
8	7.788	0.128	0.215	874.23	9.6	134.88	1.5	4.28	4.71e-02	0.0	0.0
9	10.499	0.095	0.185	261.31	2.9	1259.22	13.8	12.39	0.1	0.0	0.0
10	11.612	0.086	0.177	2.03	2.24e-02	7.32	8.05e-02	606.12	6.7	0.0	0.0
11	12.375	0.081	0.172	178.87	2.0	135.97	1.5	0.14	1.55e-03	0.0	0.0
12	13.710	0.073	0.165	20.33	0.2	14.30	0.2	3.59	3.95e-02	0.0	0.0
13	14.825	0.067	0.160	0.71	7.83e-03	0.07	8.01e-04	1094.17	12.0	0.0	0.0
14	16.003	0.062	0.156	57.84	0.6	68.21	0.8	0.10	1.07e-03	0.0	0.0
15	18.496	0.054	0.148	1.10	1.21e-02	62.55	0.7	1108.88	12.2	0.0	0.0
16	20.142	0.050	0.144	137.99	1.5	459.10	5.0	61.38	0.7	0.0	0.0
17	21.154	0.047	0.142	893.88	9.8	21.57	0.2	6.46	7.11e-02	0.0	0.0
18	21.609	0.046	0.141	2.30	2.53e-02	27.95	0.3	2.50	2.75e-02	0.0	0.0
19	25.736	0.039	0.135	2.52	2.77e-02	18.81	0.2	3.40	3.74e-02	0.0	0.0
20	28.870	0.035	0.131	1.90	2.09e-02	45.90	0.5	576.50	6.3	0.0	0.0
Risulta				9053.93		8008.40		3877.81			
In percentuale				99.56		88.06		42.64			

CDC	Tipo	Sigla Id	Note
19	Edk	CDC=Ed (dinamico SLO) alfa=90.00 (ecc. +)	
			categoria suolo: C
			fattore di sito S = 1.000
			ordinata spettro (tratto Tb-Tc) = 0.250 g
			angolo di ingresso:90.00
			eccentricità aggiuntiva: positiva
			periodo proprio T1: 0.157 sec.
			numero di modi considerati: 20
			combinaz. modale: CQC

Quota	M Sismica x g	Pos. GX	Pos. GY	E agg. X-X	E agg. Y-Y	Pos. KX	Pos. KY	(r/Ls)^2	rapp. ex/rx	rapp. ey/ry
cm	daN	cm	cm	cm	cm	cm	cm			
520.10	2484.25	132.23	338.83	17.50	0.0	125.00	300.00	0.578	0.054	0.478
342.10	2850.43	125.00	-26.15	13.50	0.0	125.00	0.0	0.907	0.0	0.322
164.10	3156.76	150.67	331.26	17.50	0.0	125.00	300.00	0.578	0.190	0.385
35.00	602.62	60.00	60.00	6.00	0.0	60.00	60.00	3.000	0.0	0.0
Risulta	9094.06									

Modo	Frequenza	Periodo	Acc. Spettrale	M efficace X x g	%	M efficace Y x g	%	M efficace Z x g	%	Energia	Energia x v
	Hz	sec	g	daN		daN		daN			
1	2.747	0.364	0.250	423.18	4.7	315.73	3.5	1.28	1.41e-02	0.0	0.0
2	4.063	0.246	0.250	110.96	1.2	142.58	1.6	372.37	4.1	0.0	0.0
3	4.401	0.227	0.250	4471.40	49.2	429.17	4.7	13.48	0.1	0.0	0.0
4	4.645	0.215	0.250	61.36	0.7	0.41	4.51e-03	0.08	8.49e-04	0.0	0.0
5	4.724	0.212	0.250	3.84	4.23e-02	5.05e-03	5.55e-05	0.07	7.29e-04	0.0	0.0
6	4.969	0.201	0.250	1521.87	16.7	1056.47	11.6	9.28	0.1	0.0	0.0
7	6.361	0.157	0.241	0.48	5.31e-03	4227.57	46.5	0.92	1.01e-02	0.0	0.0
8	7.726	0.129	0.216	614.47	6.8	198.30	2.2	5.51	6.06e-02	0.0	0.0
9	10.501	0.095	0.185	258.94	2.8	860.72	9.5	6.99	7.69e-02	0.0	0.0
10	11.607	0.086	0.177	3.61	3.97e-02	1.15e-03	1.27e-05	597.43	6.6	0.0	0.0
11	11.739	0.085	0.176	401.65	4.4	209.16	2.3	14.18	0.2	0.0	0.0
12	13.623	0.073	0.166	16.10	0.2	48.37	0.5	5.05	5.56e-02	0.0	0.0
13	14.827	0.067	0.160	0.41	4.50e-03	0.24	2.66e-03	1089.46	12.0	0.0	0.0

Viale Duca Alessandro n. 11 – 43123 Parma
Cell. 335 1403156 – E mail ing.concari@gmail.com
Sito web: studioaire.it – P.IVA 02561480340

Modo	Frequenza	Periodo	Acc. Spettrale	M efficace X x g	%	M efficace Y x g	%	M efficace Z x g	%	Energia	Energia x v
14	16.390	0.061	0.155	75.46	0.8	56.03	0.6	0.01	1.30e-04	0.0	0.0
15	18.500	0.054	0.148	4.62	5.08e-02	80.38	0.9	1103.40	12.1	0.0	0.0
16	19.871	0.050	0.145	698.43	7.7	202.24	2.2	42.96	0.5	0.0	0.0
17	20.594	0.049	0.143	355.85	3.9	207.59	2.3	38.58	0.4	0.0	0.0
18	21.610	0.046	0.141	0.66	7.22e-03	25.47	0.3	1.75	1.92e-02	0.0	0.0
19	23.865	0.042	0.137	5.33	5.86e-02	20.25	0.2	0.08	8.28e-04	0.0	0.0
20	28.231	0.035	0.132	38.58	0.4	2.25	2.48e-02	90.54	1.0	0.0	0.0
Risulta				9067.21		8082.94		3393.42			
In percentuale				99.70		88.88		37.31			

CDC	Tipo	Sigla Id	Note
20	Edk	CDC=Ed (dinamico SLO) alfa=90.00 (ecc. -)	
			categoria suolo: C
			fattore di sito S = 1.000
			ordinata spettro (tratto Tb-Tc) = 0.250 g
			angolo di ingresso:90.00
			eccentricità aggiuntiva: negativa
			periodo proprio T1: 0.169 sec.
			numero di modi considerati: 20
			combinaz. modale: CQC

Quota	M Sismica x g	Pos. GX	Pos. GY	E agg. X-X	E agg. Y-Y	Pos. KX	Pos. KY	(r/Ls)^2	rapp. ex/rx	rapp. ey/ry
cm	daN	cm	cm	cm	cm	cm	cm			
520.10	2484.25	132.23	338.83	-17.50	0.0	125.00	300.00	0.578	0.054	0.478
342.10	2850.43	125.00	-26.15	-13.50	0.0	125.00	0.0	0.907	0.0	0.322
164.10	3156.76	150.67	331.26	-17.50	0.0	125.00	300.00	0.578	0.190	0.385
35.00	602.62	60.00	60.00	-6.00	0.0	60.00	60.00	3.000	0.0	0.0
Risulta	9094.06									

Modo	Frequenza	Periodo	Acc. Spettrale	M efficace X x g	%	M efficace Y x g	%	M efficace Z x g	%	Energia	Energia x v
	Hz	sec	g	daN		daN		daN			
1	2.935	0.341	0.250	611.04	6.7	10.42	0.1	0.64	7.04e-03	0.0	0.0
2	4.066	0.246	0.250	1.97	2.17e-02	129.42	1.4	386.84	4.3	0.0	0.0
3	4.529	0.221	0.250	5637.32	62.0	2.80	3.08e-02	0.06	6.95e-04	0.0	0.0
4	4.647	0.215	0.250	0.53	5.78e-03	7.09	7.79e-02	0.03	2.79e-04	0.0	0.0
5	4.720	0.212	0.250	114.83	1.3	104.98	1.2	0.70	7.73e-03	0.0	0.0
6	5.310	0.188	0.250	130.74	1.4	1973.03	21.7	7.60	8.35e-02	0.0	0.0
7	5.915	0.169	0.250	126.56	1.4	3386.96	37.2	2.47	2.72e-02	0.0	0.0
8	8.528	0.117	0.205	865.11	9.5	225.16	2.5	4.77	5.24e-02	0.0	0.0
9	10.760	0.093	0.183	58.62	0.6	638.39	7.0	11.09	0.1	0.0	0.0
10	11.600	0.086	0.177	2.01	2.22e-02	1.53	1.69e-02	600.59	6.6	0.0	0.0
11	12.247	0.082	0.173	334.46	3.7	682.44	7.5	6.05	6.65e-02	0.0	0.0
12	14.132	0.071	0.163	35.37	0.4	0.06	6.09e-04	3.97	4.37e-02	0.0	0.0
13	14.828	0.067	0.160	1.25	1.38e-02	0.73	8.01e-03	1101.36	12.1	0.0	0.0
14	16.015	0.062	0.156	79.10	0.9	46.87	0.5	0.41	4.49e-03	0.0	0.0
15	18.504	0.054	0.148	1.17	1.29e-02	40.98	0.5	1107.69	12.2	0.0	0.0
16	20.040	0.050	0.145	228.19	2.5	515.02	5.7	42.50	0.5	0.0	0.0
17	20.852	0.048	0.143	840.78	9.2	44.07	0.5	11.32	0.1	0.0	0.0
18	21.602	0.046	0.141	0.26	2.90e-03	30.86	0.3	3.22	3.54e-02	0.0	0.0
19	27.961	0.036	0.132	0.87	9.55e-03	63.74	0.7	164.82	1.8	0.0	0.0
20	29.363	0.034	0.130	1.97e-04	2.16e-06	28.13	0.3	537.14	5.9	0.0	0.0
Risulta				9070.20		7932.67		3993.27			
In percentuale				99.74		87.23		43.91			

Cmb	Pilas.	1000 etaT/h	etaT	inter. h	Pilas.	1000 etaT/h	etaT	inter. h	Pilas.	1000 etaT/h	etaT	inter. h
			cm	cm			cm	cm			cm	cm
185	2	10.32	0.36	35.0	4	0.88	0.30	342.1	5	12.30	0.43	35.0
	16	1.06	0.38	356.0	17	0.46	0.07	164.1	46	0.42	0.07	164.1
	47	1.31	0.47	356.0	48	1.28	0.44	342.1				
186	2	9.35	0.33	35.0	4	0.70	0.24	342.1	5	10.17	0.36	35.0
	16	1.53	0.55	356.0	17	0.81	0.13	164.1	46	0.53	0.09	164.1
	47	1.32	0.47	356.0	48	0.76	0.26	342.1				
187	2	9.19	0.32	35.0	4	0.77	0.26	342.1	5	10.04	0.35	35.0
	16	1.76	0.63	356.0	17	1.00	0.16	164.1	46	0.50	0.08	164.1
	47	1.23	0.44	356.0	48	0.70	0.24	342.1				
188	2	10.15	0.36	35.0	4	0.91	0.31	342.1	5	12.14	0.42	35.0
	16	1.22	0.43	356.0	17	0.60	0.10	164.1	46	0.38	0.06	164.1
	47	1.20	0.43	356.0	48	1.19	0.41	342.1				
189	2	10.42	0.36	35.0	4	0.66	0.23	342.1	5	12.55	0.44	35.0
	16	1.26	0.45	356.0	17	0.55	0.09	164.1	46	0.50	0.08	164.1
	47	1.44	0.51	356.0	48	1.10	0.38	342.1				
190	2	9.24	0.32	35.0	4	0.91	0.31	342.1	5	9.92	0.35	35.0
	16	1.36	0.48	356.0	17	0.72	0.12	164.1	46	0.44	0.07	164.1
	47	1.14	0.41	356.0	48	0.98	0.34	342.1				
191	2	9.08	0.32	35.0	4	0.96	0.33	342.1	5	9.79	0.34	35.0
	16	1.61	0.57	356.0	17	0.92	0.15	164.1	46	0.41	0.07	164.1
	47	1.05	0.37	356.0	48	0.93	0.32	342.1				
192	2	10.26	0.36	35.0	4	0.70	0.24	342.1	5	12.40	0.43	35.0
	16	1.39	0.50	356.0	17	0.69	0.11	164.1	46	0.47	0.08	

Viale Duca Alessandro n. 11 – 43123 Parma
Cell. 335 1403156 – E mail ing.concari@gmail.com
Sito web: studioaire.it – P.IVA 02561480340

164.1												
	47	1.34	0.48	356.0	48	1.00	0.34	342.1				
193	2	10.68	0.37	35.0	4	0.85	0.29	342.1	5	13.31	0.47	35.0
	16	1.19	0.42	356.0	17	0.50	0.08	164.1	46	0.40	0.07	
164.1												
	47	1.39	0.50	356.0	48	1.42	0.48	342.1				
194	2	9.71	0.34	35.0	4	0.70	0.24	342.1	5	11.20	0.39	35.0
	16	1.73	0.61	356.0	17	0.88	0.15	164.1	46	0.50	0.08	
164.1												
	47	1.31	0.47	356.0	48	0.87	0.30	342.1				
195	2	9.55	0.33	35.0	4	0.77	0.26	342.1	5	11.07	0.39	35.0
	16	2.01	0.72	356.0	17	1.09	0.18	164.1	46	0.47	0.08	
164.1												
	47	1.22	0.43	356.0	48	0.77	0.26	342.1				
196	2	10.52	0.37	35.0	4	0.89	0.30	342.1	5	13.16	0.46	35.0
	16	1.45	0.52	356.0	17	0.68	0.11	164.1	46	0.35	0.06	
164.1												
	47	1.29	0.46	356.0	48	1.31	0.45	342.1				
197	2	10.79	0.38	35.0	4	0.63	0.22	342.1	5	13.57	0.47	35.0
	16	1.36	0.49	356.0	17	0.59	0.10	164.1	46	0.48	0.08	
164.1												
	47	1.50	0.54	356.0	48	1.26	0.43	342.1				
198	2	9.60	0.34	35.0	4	0.89	0.30	342.1	5	10.94	0.38	35.0
	16	1.58	0.56	356.0	17	0.80	0.13	164.1	46	0.42	0.07	
164.1												
	47	1.16	0.41	356.0	48	1.06	0.36	342.1				
199	2	9.44	0.33	35.0	4	0.95	0.32	342.1	5	10.81	0.38	35.0
	16	1.88	0.67	356.0	17	1.01	0.17	164.1	46	0.38	0.06	
164.1												
	47	1.06	0.38	356.0	48	0.98	0.34	342.1				
200	2	10.63	0.37	35.0	4	0.68	0.23	342.1	5	13.42	0.47	35.0
	16	1.60	0.57	356.0	17	0.76	0.13	164.1	46	0.44	0.07	
164.1												
	47	1.40	0.50	356.0	48	1.14	0.39	342.1				
201	2	4.63	0.16	35.0	4	0.70	0.24	342.1	5	7.02	0.25	35.0
	16	0.78	0.28	356.0	17	0.63	0.10	164.1	46	0.13	0.02	
164.1												
	47	1.03	0.37	356.0	48	1.27	0.44	342.1				
202	2	1.40	0.05	35.0	4	0.39	0.13	342.1	5	0.62	0.02	35.0
	16	1.18	0.42	356.0	17	0.78	0.13	164.1	46	0.34	0.06	
164.1												
	47	1.00	0.36	356.0	48	0.63	0.22	342.1				
203	2	1.27	0.04	35.0	4	0.50	0.17	342.1	5	1.12	0.04	35.0
	16	1.47	0.52	356.0	17	1.01	0.17	164.1	46	0.33	0.05	
164.1												
	47	1.02	0.36	356.0	48	0.76	0.26	342.1				
204	2	4.46	0.16	35.0	4	0.66	0.23	342.1	5	6.82	0.24	35.0
	16	0.39	0.14	356.0	17	0.39	0.06	164.1	46	0.07	0.01	
164.1												
	47	0.95	0.34	356.0	48	1.16	0.40	342.1				
205	2	4.74	0.17	35.0	4	0.68	0.23	342.1	5	7.32	0.26	35.0
	16	0.66	0.24	356.0	17	0.60	0.10	164.1	46	0.14	0.02	
164.1												
	47	1.09	0.39	356.0	48	1.32	0.45	342.1				
206	2	1.51	0.05	35.0	4	0.41	0.14	342.1	5	0.67	0.02	35.0
	16	1.25	0.45	356.0	17	0.81	0.13	164.1	46	0.34	0.05	
164.1												
	47	0.95	0.34	356.0	48	0.58	0.20	342.1				
207	2	1.37	0.05	35.0	4	0.52	0.18	342.1	5	1.12	0.04	35.0
	16	1.56	0.56	356.0	17	1.04	0.17	164.1	46	0.32	0.05	
164.1												
	47	0.96	0.34	356.0	48	0.70	0.24	342.1				
208	2	4.56	0.16	35.0	4	0.64	0.22	342.1	5	7.13	0.25	35.0
	16	0.30	0.11	356.0	17	0.36	0.06	164.1	46	0.08	0.01	
164.1												
	47	1.02	0.36	356.0	48	1.21	0.41	342.1				
209	2	4.99	0.17	35.0	4	0.27	0.09	342.1	5	7.89	0.28	35.0
	16	0.89	0.32	356.0	17	0.54	0.09	164.1	46	0.25	0.04	
164.1												
	47	1.06	0.38	356.0	48	0.98	0.34	342.1				
210	2	1.04	0.04	35.0	4	0.65	0.22	342.1	5	1.19	0.04	35.0
	16	0.78	0.28	356.0	17	0.56	0.09	164.1	46	0.07	0.01	
164.1												
	47	0.45	0.16	356.0	48	0.75	0.26	342.1				
211	2	0.91	0.03	35.0	4	0.71	0.24	342.1	5	1.62	0.06	35.0
	16	1.18	0.42	356.0	17	0.81	0.13	164.1	46	0.07	0.01	
164.1												
	47	0.56	0.20	356.0	48	0.84	0.29	342.1				
212	2	4.82	0.17	35.0	4	0.17	0.06	342.1	5	7.68	0.27	35.0
	16	0.57	0.20	356.0	17	0.32	0.05	164.1	46	0.22	0.04	
164.1												
	47	0.94	0.33	356.0	48	0.85	0.29	342.1				
213	2	5.10	0.18	35.0	4	0.26	0.09	342.1	5	8.18	0.29	35.0
	16	0.78	0.28	356.0	17	0.50	0.08	164.1	46	0.25	0.04	
164.1												
	47	1.10	0.39	356.0	48	1.04	0.36	342.1				
214	2	1.15	0.04	35.0	4	0.65	0.22	342.1	5	0.99	0.03	35.0
	16	0.89	0.32	356.0	17	0.60	0.10	164.1	46	0.07	0.01	
164.1												
	47	0.38	0.14	356.0	48	0.70	0.24	342.1				
215	2	1.01	0.04	35.0	4	0.71	0.24	342.1	5	1.46	0.05	35.0
	16	1.30	0.46	356.0	17	0.84	0.14	164.1	46	0.06	9.82e-03	

Viale Duca Alessandro n. 11 – 43123 Parma
Cell. 335 1403156 – E mail ing.concari@gmail.com
Sito web: studioaire.it – P.IVA 02561480340

164.1												
	47	0.50	0.18	356.0	48	0.79	0.27	342.1				
216	2	4.93	0.17	35.0	4	0.17	0.06	342.1	5	7.99	0.28	35.0
	16	0.50	0.18	356.0	17	0.29	0.05	164.1	46	0.21	0.03	
164.1												
	47	0.98	0.35	356.0	48	0.91	0.31	342.1				
217	2	8.33	0.29	35.0	4	0.71	0.24	342.1	5	9.92	0.35	35.0
	16	0.85	0.30	356.0	17	0.36	0.06	164.1	46	0.34	0.06	
164.1												
	47	1.07	0.38	356.0	48	1.04	0.36	342.1				
218	2	7.55	0.26	35.0	4	0.56	0.19	342.1	5	8.21	0.29	35.0
	16	1.22	0.43	356.0	17	0.64	0.10	164.1	46	0.43	0.07	
164.1												
	47	1.07	0.38	356.0	48	0.62	0.21	342.1				
219	2	7.39	0.26	35.0	4	0.63	0.21	342.1	5	8.08	0.28	35.0
	16	1.44	0.51	356.0	17	0.83	0.14	164.1	46	0.40	0.07	
164.1												
	47	0.98	0.35	356.0	48	0.56	0.19	342.1				
220	2	8.16	0.29	35.0	4	0.74	0.25	342.1	5	9.77	0.34	35.0
	16	1.01	0.36	356.0	17	0.50	0.08	164.1	46	0.30	0.05	
164.1												
	47	0.96	0.34	356.0	48	0.95	0.33	342.1				
221	2	8.41	0.29	35.0	4	0.53	0.18	342.1	5	10.13	0.35	35.0
	16	1.01	0.36	356.0	17	0.44	0.07	164.1	46	0.41	0.07	
164.1												
	47	1.17	0.42	356.0	48	0.90	0.31	342.1				
222	2	7.46	0.26	35.0	4	0.73	0.25	342.1	5	8.00	0.28	35.0
	16	1.07	0.38	356.0	17	0.56	0.09	164.1	46	0.36	0.06	
164.1												
	47	0.93	0.33	356.0	48	0.80	0.27	342.1				
223	2	7.30	0.26	35.0	4	0.78	0.27	342.1	5	7.87	0.28	35.0
	16	1.32	0.47	356.0	17	0.76	0.12	164.1	46	0.33	0.05	
164.1												
	47	0.84	0.30	356.0	48	0.74	0.25	342.1				
224	2	8.25	0.29	35.0	4	0.57	0.19	342.1	5	9.97	0.35	35.0
	16	1.14	0.41	356.0	17	0.57	0.09	164.1	46	0.37	0.06	
164.1												
	47	1.07	0.38	356.0	48	0.80	0.27	342.1				
225	2	8.62	0.30	35.0	4	0.68	0.23	342.1	5	10.74	0.38	35.0
	16	0.94	0.33	356.0	17	0.39	0.06	164.1	46	0.33	0.05	
164.1												
	47	1.13	0.40	356.0	48	1.15	0.39	342.1				
226	2	7.84	0.27	35.0	4	0.55	0.19	342.1	5	9.03	0.32	35.0
	16	1.36	0.49	356.0	17	0.70	0.11	164.1	46	0.41	0.07	
164.1												
	47	1.07	0.38	356.0	48	0.71	0.24	342.1				
227	2	7.68	0.27	35.0	4	0.63	0.21	342.1	5	8.90	0.31	35.0
	16	1.65	0.59	356.0	17	0.90	0.15	164.1	46	0.37	0.06	
164.1												
	47	0.97	0.35	356.0	48	0.61	0.21	342.1				
228	2	8.46	0.30	35.0	4	0.72	0.25	342.1	5	10.59	0.37	35.0
	16	1.20	0.43	356.0	17	0.57	0.09	164.1	46	0.28	0.05	
164.1												
	47	1.03	0.37	356.0	48	1.05	0.36	342.1				
229	2	8.71	0.30	35.0	4	0.51	0.17	342.1	5	10.95	0.38	35.0
	16	1.08	0.38	356.0	17	0.47	0.08	164.1	46	0.39	0.06	
164.1												
	47	1.22	0.44	356.0	48	1.03	0.35	342.1				
230	2	7.75	0.27	35.0	4	0.71	0.24	342.1	5	8.83	0.31	35.0
	16	1.24	0.44	356.0	17	0.63	0.10	164.1	46	0.34	0.06	
164.1												
	47	0.94	0.34	356.0	48	0.86	0.30	342.1				
231	2	7.59	0.27	35.0	4	0.77	0.26	342.1	5	8.70	0.30	35.0
	16	1.55	0.55	356.0	17	0.84	0.14	164.1	46	0.30	0.05	
164.1												
	47	0.84	0.30	356.0	48	0.79	0.27	342.1				
232	2	8.54	0.30	35.0	4	0.56	0.19	342.1	5	10.80	0.38	35.0
	16	1.31	0.47	356.0	17	0.63	0.10	164.1	46	0.35	0.06	
164.1												
	47	1.12	0.40	356.0	48	0.91	0.31	342.1				
233	2	3.75	0.13	35.0	4	0.57	0.19	342.1	5	5.68	0.20	35.0
	16	0.66	0.24	356.0	17	0.54	0.09	164.1	46	0.11	0.02	
164.1												
	47	0.84	0.30	356.0	48	1.04	0.36	342.1				
234	2	1.14	0.04	35.0	4	0.31	0.11	342.1	5	0.46	0.02	35.0
	16	0.93	0.33	356.0	17	0.62	0.10	164.1	46	0.28	0.05	
164.1												
	47	0.81	0.29	356.0	48	0.50	0.17	342.1				
235	2	1.02	0.04	35.0	4	0.42	0.14	342.1	5	0.95	0.03	35.0
	16	1.22	0.43	356.0	17	0.84	0.14	164.1	46	0.27	0.04	
164.1												
	47	0.83	0.29	356.0	48	0.63	0.22	342.1				
236	2	3.58	0.13	35.0	4	0.53	0.18	342.1	5	5.48	0.19	35.0
	16	0.28	0.10	356.0	17	0.29	0.05	164.1	46	0.06	0.01	
164.1												
	47	0.76	0.27	356.0	48	0.93	0.32	342.1				
237	2	3.84	0.13	35.0	4	0.55	0.19	342.1	5	5.92	0.21	35.0
	16	0.57	0.20	356.0	17	0.51	0.08	164.1	46	0.12	0.02	
164.1												
	47	0.89	0.32	356.0	48	1.08	0.37	342.1				
238	2	1.23	0.04	35.0	4	0.32	0.11	342.1	5	0.51	0.02	35.0
	16	0.98	0.35	356.0	17	0.64	0.10	164.1	46	0.27	0.04	

Viale Duca Alessandro n. 11 – 43123 Parma
Cell. 335 1403156 – E mail ing.concari@gmail.com
Sito web: studioaire.it – P.IVA 02561480340

164.1												
	47	0.76	0.27	356.0	48	0.46	0.16	342.1				
239	2	1.10	0.04	35.0	4	0.43	0.15	342.1	5	0.95	0.03	35.0
	16	1.29	0.46	356.0	17	0.86	0.14	164.1	46	0.26	0.04	
164.1												
	47	0.78	0.28	356.0	48	0.59	0.20	342.1				
240	2	3.66	0.13	35.0	4	0.52	0.18	342.1	5	5.73	0.20	35.0
	16	0.22	0.08	356.0	17	0.27	0.04	164.1	46	0.07	0.01	
164.1												
	47	0.82	0.29	356.0	48	0.97	0.33	342.1				
241	2	4.04	0.14	35.0	4	0.23	0.08	342.1	5	6.37	0.22	35.0
	16	0.75	0.27	356.0	17	0.46	0.08	164.1	46	0.21	0.03	
164.1												
	47	0.87	0.31	356.0	48	0.81	0.28	342.1				
242	2	0.86	0.03	35.0	4	0.52	0.18	342.1	5	0.93	0.03	35.0
	16	0.59	0.21	356.0	17	0.43	0.07	164.1	46	0.07	0.01	
164.1												
	47	0.35	0.13	356.0	48	0.60	0.21	342.1				
243	2	0.73	0.03	35.0	4	0.58	0.20	342.1	5	1.35	0.05	35.0
	16	0.99	0.35	356.0	17	0.68	0.11	164.1	46	0.06	0.01	
164.1												
	47	0.46	0.16	356.0	48	0.69	0.24	342.1				
244	2	3.87	0.14	35.0	4	0.13	0.05	342.1	5	6.17	0.22	35.0
	16	0.44	0.16	356.0	17	0.24	0.04	164.1	46	0.17	0.03	
164.1												
	47	0.74	0.26	356.0	48	0.67	0.23	342.1				
245	2	4.12	0.14	35.0	4	0.22	0.08	342.1	5	6.61	0.23	35.0
	16	0.66	0.24	356.0	17	0.43	0.07	164.1	46	0.21	0.03	
164.1												
	47	0.90	0.32	356.0	48	0.86	0.29	342.1				
246	2	0.95	0.03	35.0	4	0.52	0.18	342.1	5	0.75	0.03	35.0
	16	0.68	0.24	356.0	17	0.46	0.08	164.1	46	0.07	0.01	
164.1												
	47	0.29	0.10	356.0	48	0.56	0.19	342.1				
247	2	0.81	0.03	35.0	4	0.58	0.20	342.1	5	1.22	0.04	35.0
	16	1.09	0.39	356.0	17	0.70	0.12	164.1	46	0.06	9.45e-03	
164.1												
	47	0.41	0.15	356.0	48	0.65	0.22	342.1				
248	2	3.96	0.14	35.0	4	0.14	0.05	342.1	5	6.42	0.22	35.0
	16	0.39	0.14	356.0	17	0.21	0.04	164.1	46	0.17	0.03	
164.1												
	47	0.78	0.28	356.0	48	0.72	0.25	342.1				

Cmb	**1000 etaT/h**
	13.57

MODELLO 2 SCALA ANTINCENDIO

CDC	**Tipo**	**Sigla Id**	**Note**
5	Edk	CDC=Ed (dinamico SLU) alfa=0.0 (ecc. +)	
			categoria suolo: C
			fattore di sito S = 1.000
			ordinata spettro (tratto Tb-Tc) = 0.706 g
			angolo di ingresso:0.0
			eccentricità aggiuntiva: positiva
			periodo proprio T1: 0.288 sec.
			fattore q: 1.000
			amplificazione ND (non dissipativi): 1.000
			fattore per spost. mu d: 1.000
			classe di duttilità CD: ND
			numero di modi considerati: 20
			combinaz. modale: CQC

Quota	**M Sismica x g**	**Pos. GX**	**Pos. GY**	**E agg. X-X**	**E agg. Y-Y**	**Pos. KX**	**Pos. KY**	**(r/Ls)^2**	**rapp. ex/rx**	**rapp. ey/ry**
cm	daN	cm	cm	cm	cm	cm	cm			
520.10	2484.25	132.23	338.83	0.0	-6.00	125.00	300.00	0.578	0.054	0.478
342.10	2850.43	125.00	-26.15	0.0	-6.00	125.00	0.0	0.907	0.0	0.322
164.10	3156.76	150.67	331.26	0.0	-6.00	125.00	300.00	0.578	0.190	0.385
35.00	602.62	60.00	60.00	0.0	0.0	60.00	60.00	3.000	0.0	0.0
Risulta	9094.06									

Modo	**Frequenza**	**Periodo**	**Acc. Spettrale**	**M efficace X x g**	**%**	**M efficace Y x g**	**%**	**M efficace Z x g**	**%**	**Energia**	**Energia x v**
	Hz	sec	g	daN		daN		daN			
1	2.779	0.360	0.706	1376.93	15.1	75.18	0.8	0.20	2.17e-03	0.0	0.0
2	3.473	0.288	0.706	5017.49	55.2	176.57	1.9	32.19	0.4	0.0	0.0
3	3.930	0.254	0.706	408.36	4.5	1517.20	16.7	350.41	3.9	0.0	0.0
4	4.450	0.225	0.706	3.22	3.54e-02	3225.11	35.5	78.22	0.9	0.0	0.0
5	4.642	0.215	0.706	149.92	1.6	20.89	0.2	0.50	5.53e-03	0.0	0.0
6	4.714	0.212	0.706	190.58	2.1	141.38	1.6	1.83	2.01e-02	0.0	0.0
7	5.278	0.189	0.703	65.31	0.7	1423.51	15.7	2.59	2.84e-02	0.0	0.0
8	8.004	0.125	0.557	442.43	4.9	342.29	3.8	16.07	0.2	0.0	0.0
9	9.997	0.100	0.501	161.15	1.8	129.50	1.4	262.45	2.9	0.0	0.0
10	10.818	0.092	0.484	15.07	0.2	1.84	2.03e-02	875.32	9.6	0.0	0.0
11	11.462	0.087	0.472	347.92	3.8	332.46	3.7	812.46	8.9	0.0	0.0

Viale Duca Alessandro n. 11 – 43123 Parma
Cell. 335 1403156 – E mail ing.concari@gmail.com
Sito web: studioaire.it – P.IVA 02561480340

Modo	Frequenza	Periodo	Acc. Spettrale	M efficace X x g	%	M efficace Y x g	%	M efficace Z x g	%	Energia	Energia x v
12	12.844	0.078	0.451	73.55	0.8	99.96	1.1	900.70	9.9	0.0	0.0
13	13.490	0.074	0.443	107.90	1.2	20.06	0.2	2477.22	27.2	0.0	0.0
14	15.455	0.065	0.422	60.84	0.7	9.30	0.1	191.62	2.1	0.0	0.0
15	16.607	0.060	0.412	72.25	0.8	206.34	2.3	1013.47	11.1	0.0	0.0
16	17.624	0.057	0.404	387.41	4.3	183.45	2.0	250.64	2.8	0.0	0.0
17	18.533	0.054	0.397	36.84	0.4	503.37	5.5	141.72	1.6	0.0	0.0
18	20.513	0.049	0.386	10.99	0.1	34.62	0.4	1.23	1.35e-02	0.0	0.0
19	22.695	0.044	0.375	3.51	3.86e-02	10.04	0.1	1238.97	13.6	0.0	0.0
20	25.484	0.039	0.364	3.27	3.60e-02	112.71	1.2	56.81	0.6	0.0	0.0
Risulta				8934.94		8565.79		8704.62			
In percentuale				98.25		94.19		95.72			

CDC	Tipo	Sigla Id	Note
6	Edk	CDC=Ed (dinamico SLU) alfa=0.0 (ecc. -)	
			categoria suolo: C
			fattore di sito S = 1.000
			ordinata spettro (tratto Tb-Tc) = 0.706 g
			angolo di ingresso:0.0
			eccentricità aggiuntiva: negativa
			periodo proprio T1: 0.279 sec.
			fattore q: 1.000
			amplificazione ND (non dissipativi): 1.000
			fattore per spost. mu d: 1.000
			classe di duttilità CD: ND
			numero di modi considerati: 20
			combinaz. modale: CQC

Quota	M Sismica x g	Pos. GX	Pos. GY	E agg. X-X	E agg. Y-Y	Pos. KX	Pos. KY	(r/Ls)^2	rapp. ex/rx	rapp. ey/ry
cm	daN	cm	cm	cm	cm	cm	cm			
520.10	2484.25	132.23	338.83	0.0	6.00	125.00	300.00	0.578	0.054	0.478
342.10	2850.43	125.00	-26.15	0.0	6.00	125.00	0.0	0.907	0.0	0.322
164.10	3156.76	150.67	331.26	0.0	6.00	125.00	300.00	0.578	0.190	0.385
35.00	602.62	60.00	60.00	0.0	0.0	60.00	60.00	3.000	0.0	0.0
Risulta	9094.06									

Modo	Frequenza	Periodo	Acc. Spettrale	M efficace X x g	%	M efficace Y x g	%	M efficace Z x g	%	Energia	Energia x v
	Hz	sec	g	daN		daN		daN			
1	2.666	0.375	0.706	1831.42	20.1	62.04	0.7	0.11	1.24e-03	0.0	0.0
2	3.586	0.279	0.706	4117.12	45.3	429.12	4.7	67.23	0.7	0.0	0.0
3	3.978	0.251	0.706	875.80	9.6	1144.90	12.6	335.02	3.7	0.0	0.0
4	4.480	0.223	0.706	2.41	2.65e-02	3738.23	41.1	58.51	0.6	0.0	0.0
5	4.640	0.215	0.706	135.82	1.5	29.35	0.3	0.64	7.04e-03	0.0	0.0
6	4.715	0.212	0.706	183.92	2.0	202.47	2.2	1.99	2.19e-02	0.0	0.0
7	5.385	0.186	0.694	81.62	0.9	945.78	10.4	2.07	2.28e-02	0.0	0.0
8	7.478	0.134	0.577	687.42	7.6	112.62	1.2	4.51	4.96e-02	0.0	0.0
9	9.584	0.104	0.511	181.40	2.0	521.03	5.7	204.83	2.3	0.0	0.0
10	11.030	0.091	0.480	50.51	0.6	127.77	1.4	1582.09	17.4	0.0	0.0
11	12.090	0.083	0.462	92.63	1.0	100.00	1.1	276.07	3.0	0.0	0.0
12	12.746	0.078	0.453	33.83	0.4	94.27	1.0	348.04	3.8	0.0	0.0
13	13.380	0.075	0.444	42.50	0.5	6.07	6.68e-02	2818.65	31.0	0.0	0.0
14	14.944	0.067	0.427	44.06	0.5	12.20	0.1	279.76	3.1	0.0	0.0
15	16.641	0.060	0.411	25.08	0.3	170.64	1.9	1119.34	12.3	0.0	0.0
16	18.118	0.055	0.400	305.41	3.4	443.09	4.9	259.03	2.8	0.0	0.0
17	18.609	0.054	0.397	215.12	2.4	267.48	2.9	50.75	0.6	0.0	0.0
18	20.516	0.049	0.386	14.52	0.2	34.95	0.4	1.47	1.62e-02	0.0	0.0
19	22.692	0.044	0.375	3.78	4.16e-02	10.45	0.1	1235.60	13.6	0.0	0.0
20	25.440	0.039	0.364	3.57	3.93e-02	106.32	1.2	55.10	0.6	0.0	0.0
Risulta				8927.94		8558.77		8700.80			
In percentuale				98.17		94.11		95.68			

CDC	Tipo	Sigla Id	Note
7	Edk	CDC=Ed (dinamico SLU) alfa=90.00 (ecc. +)	
			categoria suolo: C
			fattore di sito S = 1.000
			ordinata spettro (tratto Tb-Tc) = 0.706 g
			angolo di ingresso:90.00
			eccentricità aggiuntiva: positiva
			periodo proprio T1: 0.225 sec.
			fattore q: 1.000
			amplificazione ND (non dissipativi): 1.000
			fattore per spost. mu d: 1.000
			classe di duttilità CD: ND
			numero di modi considerati: 20
			combinaz. modale: CQC

Quota	M Sismica x g	Pos. GX	Pos. GY	E agg. X-X	E agg. Y-Y	Pos. KX	Pos. KY	(r/Ls)^2	rapp. ex/rx	rapp. ey/ry
cm	daN	cm	cm	cm	cm	cm	cm			
520.10	2484.25	132.23	338.83	17.50	0.0	125.00	300.00	0.578	0.054	0.478
342.10	2850.43	125.00	-26.15	13.50	0.0	125.00	0.0	0.907	0.0	0.322
164.10	3156.76	150.67	331.26	17.50	0.0	125.00	300.00	0.578	0.190	0.385
35.00	602.62	60.00	60.00	6.00	0.0	60.00	60.00	3.000	0.0	0.0
Risulta	9094.06									

Viale Duca Alessandro n. 11 – 43123 Parma
Cell. 335 1403156 – E mail ing.concari@gmail.com
Sito web: studioaire.it – P.IVA 02561480340

Modo	Frequenza	Periodo	Acc. Spettrale	M efficace X x g	%	M efficace Y x g	%	M efficace Z x g	%	Energia	Energia x v
	Hz	sec	g	daN		daN		daN			
1	2.642	0.379	0.706	1217.09	13.4	375.42	4.1	0.97	1.07e-02	0.0	0.0
2	3.454	0.290	0.706	4754.49	52.3	614.41	6.8	47.46	0.5	0.0	0.0
3	3.994	0.250	0.706	767.55	8.4	755.78	8.3	352.99	3.9	0.0	0.0
4	4.442	0.225	0.706	78.61	0.9	2881.23	31.7	62.10	0.7	0.0	0.0
5	4.639	0.216	0.706	168.25	1.9	1.61	1.77e-02	0.30	3.26e-03	0.0	0.0
6	4.707	0.212	0.706	198.15	2.2	46.07	0.5	1.11	1.22e-02	0.0	0.0
7	5.381	0.186	0.694	27.28	0.3	2103.35	23.1	4.25	4.67e-02	0.0	0.0
8	7.437	0.134	0.579	480.40	5.3	202.35	2.2	5.47	6.02e-02	0.0	0.0
9	9.650	0.104	0.509	261.90	2.9	313.48	3.4	173.98	1.9	0.0	0.0
10	10.971	0.091	0.481	7.69	8.45e-02	39.31	0.4	1279.76	14.1	0.0	0.0
11	11.397	0.088	0.474	264.50	2.9	205.00	2.3	513.87	5.7	0.0	0.0
12	12.724	0.079	0.453	35.79	0.4	56.09	0.6	214.10	2.4	0.0	0.0
13	13.335	0.075	0.445	33.09	0.4	0.09	9.49e-04	3083.73	33.9	0.0	0.0
14	15.318	0.065	0.423	74.70	0.8	29.37	0.3	269.06	3.0	0.0	0.0
15	16.617	0.060	0.411	61.65	0.7	193.78	2.1	1030.09	11.3	0.0	0.0
16	17.688	0.057	0.403	440.42	4.8	137.70	1.5	219.62	2.4	0.0	0.0
17	18.558	0.054	0.397	37.44	0.4	487.17	5.4	158.27	1.7	0.0	0.0
18	20.548	0.049	0.385	13.03	0.1	26.64	0.3	4.69	5.16e-02	0.0	0.0
19	22.777	0.044	0.375	3.73	4.10e-02	3.01	3.31e-02	1243.47	13.7	0.0	0.0
20	23.718	0.042	0.371	2.14	2.35e-02	27.47	0.3	43.20	0.5	0.0	0.0
Risulta				8927.88		8499.31		8708.49			
In percentuale				98.17		93.46		95.76			

CDC	Tipo	Sigla Id	Note
8	Edk	CDC=Ed (dinamico SLU) alfa=90.00 (ecc. -)	
			categoria suolo: C
			fattore di sito S = 1.000
			ordinata spettro (tratto Tb-Tc) = 0.706 g
			angolo di ingresso:90.00
			eccentricità aggiuntiva: negativa
			periodo proprio T1: 0.221 sec.
			fattore q: 1.000
			amplificazione ND (non dissipativi): 1.000
			fattore per spost. mu d: 1.000
			classe di duttilità CD: ND
			numero di modi considerati: 20
			combinaz. modale: CQC

Quota	M Sismica x g	Pos. GX	Pos. GY	E agg. X-X	E agg. Y-Y	Pos. KX	Pos. KY	(r/Ls)^2	rapp. ex/rx	rapp. ey/ry
cm	daN	cm	cm	cm	cm	cm	cm			
520.10	2484.25	132.23	338.83	-17.50	0.0	125.00	300.00	0.578	0.054	0.478
342.10	2850.43	125.00	-26.15	-13.50	0.0	125.00	0.0	0.907	0.0	0.322
164.10	3156.76	150.67	331.26	-17.50	0.0	125.00	300.00	0.578	0.190	0.385
35.00	602.62	60.00	60.00	-6.00	0.0	60.00	60.00	3.000	0.0	0.0
Risulta	9094.06									

Modo	Frequenza	Periodo	Acc. Spettrale	M efficace X x g	%	M efficace Y x g	%	M efficace Z x g	%	Energia	Energia x v
	Hz	sec	g	daN		daN		daN			
1	2.782	0.360	0.706	1981.07	21.8	11.56	0.1	0.11	1.25e-03	0.0	0.0
2	3.602	0.278	0.706	4593.03	50.5	0.86	9.49e-03	25.04	0.3	0.0	0.0
3	3.927	0.255	0.706	216.78	2.4	1646.53	18.1	385.24	4.2	0.0	0.0
4	4.535	0.221	0.706	141.75	1.6	3635.36	40.0	46.22	0.5	0.0	0.0
5	4.646	0.215	0.706	72.60	0.8	147.82	1.6	1.49	1.64e-02	0.0	0.0
6	4.730	0.211	0.706	122.39	1.3	698.30	7.7	4.38	4.82e-02	0.0	0.0
7	5.358	0.187	0.696	103.38	1.1	307.97	3.4	1.49	1.64e-02	0.0	0.0
8	8.136	0.123	0.553	693.00	7.6	146.41	1.6	10.01	0.1	0.0	0.0
9	9.892	0.101	0.504	109.73	1.2	333.86	3.7	304.44	3.3	0.0	0.0
10	10.967	0.091	0.481	11.09	0.1	34.91	0.4	1265.67	13.9	0.0	0.0
11	11.770	0.085	0.467	150.83	1.7	276.60	3.0	365.67	4.0	0.0	0.0
12	12.943	0.077	0.450	37.02	0.4	140.79	1.5	1458.70	16.0	0.0	0.0
13	13.575	0.074	0.442	101.18	1.1	76.14	0.8	1888.61	20.8	0.0	0.0
14	14.978	0.067	0.426	45.08	0.5	4.14	4.56e-02	235.60	2.6	0.0	0.0
15	16.674	0.060	0.411	40.20	0.4	146.64	1.6	1100.82	12.1	0.0	0.0
16	17.945	0.056	0.401	362.25	4.0	408.81	4.5	237.82	2.6	0.0	0.0
17	18.531	0.054	0.397	131.64	1.4	384.74	4.2	62.94	0.7	0.0	0.0
18	20.456	0.049	0.386	11.92	0.1	46.69	0.5	0.16	1.76e-03	0.0	0.0
19	22.524	0.044	0.376	2.48	2.72e-02	35.46	0.4	1141.15	12.5	0.0	0.0
20	25.102	0.040	0.366	8.87	9.75e-02	383.56	4.2	221.78	2.4	0.0	0.0
Risulta				8936.28		8867.16		8757.34			
In percentuale				98.27		97.50		96.30			

CDC	Tipo	Sigla Id	Note
9	Edk	CDC=Ed (dinamico SLD) alfa=0.0 (ecc. +)	
			categoria suolo: C
			fattore di sito S = 1.000
			ordinata spettro (tratto Tb-Tc) = 0.310 g
			angolo di ingresso:0.0
			eccentricità aggiuntiva: positiva
			periodo proprio T1: 0.288 sec.
			numero di modi considerati: 20
			combinaz. modale: CQC

Quota	M Sismica x g	Pos. GX	Pos. GY	E agg. X-X	E agg. Y-Y	Pos. KX	Pos. KY	(r/Ls)^2	rapp. ex/rx	rapp. ey/ry
cm	daN	cm	cm	cm	cm	cm	cm			

Viale Duca Alessandro n. 11 – 43123 Parma
Cell. 335 1403156 – E mail ing.concari@gmail.com
Sito web: studioaire.it – P.IVA 02561480340

Quota	M Sismica x g	Pos. GX	Pos. GY	E agg. X-X	E agg. Y-Y	Pos. KX	Pos. KY	(r/Ls)^2	rapp. ex/rx	rapp. ey/ry
520.10	2484.25	132.23	338.83	0.0	-6.00	125.00	300.00	0.578	0.054	0.478
342.10	2850.43	125.00	-26.15	0.0	-6.00	125.00	0.0	0.907	0.0	0.322
164.10	3156.76	150.67	331.26	0.0	-6.00	125.00	300.00	0.578	0.190	0.385
35.00	602.62	60.00	60.00	0.0	0.0	60.00	60.00	3.000	0.0	0.0
Risulta	9094.06									

Modo	Frequenza	Periodo	Acc. Spettrale	M efficace X x g	%	M efficace Y x g	%	M efficace Z x g	%	Energia	Energia x v
	Hz	sec	g	daN		daN		daN			
1	2.779	0.360	0.310	1376.93	15.1	75.18	0.8	0.20	2.17e-03	0.0	0.0
2	3.473	0.288	0.310	5017.49	55.2	176.57	1.9	32.19	0.4	0.0	0.0
3	3.930	0.254	0.310	408.36	4.5	1517.20	16.7	350.41	3.9	0.0	0.0
4	4.450	0.225	0.310	3.22	3.54e-02	3225.11	35.5	78.22	0.9	0.0	0.0
5	4.642	0.215	0.310	149.92	1.6	20.89	0.2	0.50	5.53e-03	0.0	0.0
6	4.714	0.212	0.310	190.58	2.1	141.38	1.6	1.83	2.01e-02	0.0	0.0
7	5.278	0.189	0.310	65.31	0.7	1423.51	15.7	2.59	2.84e-02	0.0	0.0
8	8.004	0.125	0.260	442.43	4.9	342.29	3.8	16.07	0.2	0.0	0.0
9	9.997	0.100	0.232	161.15	1.8	129.50	1.4	262.45	2.9	0.0	0.0
10	10.818	0.092	0.224	15.07	0.2	1.84	2.03e-02	875.32	9.6	0.0	0.0
11	11.462	0.087	0.218	347.92	3.8	332.46	3.7	812.46	8.9	0.0	0.0
12	12.844	0.078	0.208	73.55	0.8	99.96	1.1	900.70	9.9	0.0	0.0
13	13.490	0.074	0.204	107.90	1.2	20.06	0.2	2477.22	27.2	0.0	0.0
14	15.455	0.065	0.194	60.84	0.7	9.30	0.1	191.62	2.1	0.0	0.0
15	16.607	0.060	0.189	72.25	0.8	206.34	2.3	1013.47	11.1	0.0	0.0
16	17.624	0.057	0.185	387.41	4.3	183.45	2.0	250.64	2.8	0.0	0.0
17	18.533	0.054	0.182	36.84	0.4	503.37	5.5	141.72	1.6	0.0	0.0
18	20.513	0.049	0.176	10.99	0.1	34.62	0.4	1.23	1.35e-02	0.0	0.0
19	22.695	0.044	0.171	3.51	3.86e-02	10.04	0.1	1238.97	13.6	0.0	0.0
20	25.484	0.039	0.166	3.27	3.60e-02	112.71	1.2	56.81	0.6	0.0	0.0
Risulta				8934.94		8565.79		8704.62			
In percentuale				98.25		94.19		95.72			

CDC	Tipo	Sigla Id	Note
10	Edk	CDC=Ed (dinamico SLD) alfa=0.0 (ecc. -)	
			categoria suolo: C
			fattore di sito S = 1.000
			ordinata spettro (tratto Tb-Tc) = 0.310 g
			angolo di ingresso:0.0
			eccentricità aggiuntiva: negativa
			periodo proprio T1: 0.279 sec.
			numero di modi considerati: 20
			combinaz. modale: CQC

Quota	M Sismica x g	Pos. GX	Pos. GY	E agg. X-X	E agg. Y-Y	Pos. KX	Pos. KY	(r/Ls)^2	rapp. ex/rx	rapp. ey/ry
cm	daN	cm	cm	cm	cm	cm	cm			
520.10	2484.25	132.23	338.83	0.0	6.00	125.00	300.00	0.578	0.054	0.478
342.10	2850.43	125.00	-26.15	0.0	6.00	125.00	0.0	0.907	0.0	0.322
164.10	3156.76	150.67	331.26	0.0	6.00	125.00	300.00	0.578	0.190	0.385
35.00	602.62	60.00	60.00	0.0	0.0	60.00	60.00	3.000	0.0	0.0
Risulta	9094.06									

Modo	Frequenza	Periodo	Acc. Spettrale	M efficace X x g	%	M efficace Y x g	%	M efficace Z x g	%	Energia	Energia x v
	Hz	sec	g	daN		daN		daN			
1	2.666	0.375	0.310	1831.42	20.1	62.04	0.7	0.11	1.24e-03	0.0	0.0
2	3.586	0.279	0.310	4117.12	45.3	429.12	4.7	67.23	0.7	0.0	0.0
3	3.978	0.251	0.310	875.80	9.6	1144.90	12.6	335.02	3.7	0.0	0.0
4	4.480	0.223	0.310	2.41	2.65e-02	3738.23	41.1	58.51	0.6	0.0	0.0
5	4.640	0.215	0.310	135.82	1.5	29.35	0.3	0.64	7.04e-03	0.0	0.0
6	4.715	0.212	0.310	183.92	2.0	202.47	2.2	1.99	2.19e-02	0.0	0.0
7	5.385	0.186	0.310	81.62	0.9	945.78	10.4	2.07	2.28e-02	0.0	0.0
8	7.478	0.134	0.269	687.42	7.6	112.62	1.2	4.51	4.96e-02	0.0	0.0
9	9.584	0.104	0.237	181.40	2.0	521.03	5.7	204.83	2.3	0.0	0.0
10	11.030	0.091	0.222	50.51	0.6	127.77	1.4	1582.09	17.4	0.0	0.0
11	12.090	0.083	0.213	92.63	1.0	100.00	1.1	276.07	3.0	0.0	0.0
12	12.746	0.078	0.209	33.83	0.4	94.27	1.0	348.04	3.8	0.0	0.0
13	13.380	0.075	0.205	42.50	0.5	6.07	6.68e-02	2818.65	31.0	0.0	0.0
14	14.944	0.067	0.196	44.06	0.5	12.20	0.1	279.76	3.1	0.0	0.0
15	16.641	0.060	0.189	25.08	0.3	170.64	1.9	1119.34	12.3	0.0	0.0
16	18.118	0.055	0.183	305.41	3.4	443.09	4.9	259.03	2.8	0.0	0.0
17	18.609	0.054	0.182	215.12	2.4	267.48	2.9	50.75	0.6	0.0	0.0
18	20.516	0.049	0.176	14.52	0.2	34.95	0.4	1.47	1.62e-02	0.0	0.0
19	22.692	0.044	0.171	3.78	4.16e-02	10.45	0.1	1235.60	13.6	0.0	0.0
20	25.440	0.039	0.166	3.57	3.93e-02	106.32	1.2	55.10	0.6	0.0	0.0
Risulta				8927.94		8558.77		8700.80			
In percentuale				98.17		94.11		95.68			

CDC	Tipo	Sigla Id	Note
11	Edk	CDC=Ed (dinamico SLD) alfa=90.00 (ecc. +)	
			categoria suolo: C
			fattore di sito S = 1.000
			ordinata spettro (tratto Tb-Tc) = 0.310 g
			angolo di ingresso:90.00
			eccentricità aggiuntiva: positiva
			periodo proprio T1: 0.225 sec.
			numero di modi considerati: 20
			combinaz. modale: CQC

Viale Duca Alessandro n. 11 – 43123 Parma
Cell. 335 1403156 – E mail ing.concari@gmail.com
Sito web: studioaire.it – P.IVA 02561480340

Quota	M Sismica x g	Pos. GX	Pos. GY	E agg. X-X	E agg. Y-Y	Pos. KX	Pos. KY	(r/Ls)^2	rapp. ex/rx	rapp. ey/ry
cm	daN	cm	cm	cm	cm	cm	cm			
520.10	2484.25	132.23	338.83	17.50	0.0	125.00	300.00	0.578	0.054	0.478
342.10	2850.43	125.00	-26.15	13.50	0.0	125.00	0.0	0.907	0.0	0.322
164.10	3156.76	150.67	331.26	17.50	0.0	125.00	300.00	0.578	0.190	0.385
35.00	602.62	60.00	60.00	6.00	0.0	60.00	60.00	3.000	0.0	0.0
Risulta	9094.06									

Modo	Frequenza	Periodo	Acc. Spettrale	M efficace X x g	%	M efficace Y x g	%	M efficace Z x g	%	Energia	Energia x v
	Hz	sec	g	daN		daN		daN			
1	2.642	0.379	0.310	1217.09	13.4	375.42	4.1	0.97	1.07e-02	0.0	0.0
2	3.454	0.290	0.310	4754.49	52.3	614.41	6.8	47.46	0.5	0.0	0.0
3	3.994	0.250	0.310	767.55	8.4	755.78	8.3	352.99	3.9	0.0	0.0
4	4.442	0.225	0.310	78.61	0.9	2881.23	31.7	62.10	0.7	0.0	0.0
5	4.639	0.216	0.310	168.25	1.9	1.61	1.77e-02	0.30	3.26e-03	0.0	0.0
6	4.707	0.212	0.310	198.15	2.2	46.07	0.5	1.11	1.22e-02	0.0	0.0
7	5.381	0.186	0.310	27.28	0.3	2103.35	23.1	4.25	4.67e-02	0.0	0.0
8	7.437	0.134	0.270	480.40	5.3	202.35	2.2	5.47	6.02e-02	0.0	0.0
9	9.650	0.104	0.236	261.90	2.9	313.48	3.4	173.98	1.9	0.0	0.0
10	10.971	0.091	0.223	7.69	8.45e-02	39.31	0.4	1279.76	14.1	0.0	0.0
11	11.397	0.088	0.219	264.50	2.9	205.00	2.3	513.87	5.7	0.0	0.0
12	12.724	0.079	0.209	35.79	0.4	56.09	0.6	214.10	2.4	0.0	0.0
13	13.335	0.075	0.205	33.09	0.4	0.09	9.49e-04	3083.73	33.9	0.0	0.0
14	15.318	0.065	0.194	74.70	0.8	29.37	0.3	269.06	3.0	0.0	0.0
15	16.617	0.060	0.189	61.65	0.7	193.78	2.1	1030.09	11.3	0.0	0.0
16	17.688	0.057	0.185	440.42	4.8	137.70	1.5	219.62	2.4	0.0	0.0
17	18.558	0.054	0.182	37.44	0.4	487.17	5.4	158.27	1.7	0.0	0.0
18	20.548	0.049	0.176	13.03	0.1	26.64	0.3	4.69	5.16e-02	0.0	0.0
19	22.777	0.044	0.171	3.73	4.10e-02	3.01	3.31e-02	1243.47	13.7	0.0	0.0
20	23.718	0.042	0.169	2.14	2.35e-02	27.47	0.3	43.20	0.5	0.0	0.0
Risulta				8927.88		8499.31		8708.49			
In percentuale				98.17		93.46		95.76			

CDC	Tipo	Sigla Id	Note
12	Edk	CDC=Ed (dinamico SLD) alfa=90.00 (ecc. -)	
			categoria suolo: C
			fattore di sito S = 1.000
			ordinata spettro (tratto Tb-Tc) = 0.310 g
			angolo di ingresso:90.00
			eccentricità aggiuntiva: negativa
			periodo proprio T1: 0.221 sec.
			numero di modi considerati: 20
			combinaz. modale: CQC

Quota	M Sismica x g	Pos. GX	Pos. GY	E agg. X-X	E agg. Y-Y	Pos. KX	Pos. KY	(r/Ls)^2	rapp. ex/rx	rapp. ey/ry
cm	daN	cm	cm	cm	cm	cm	cm			
520.10	2484.25	132.23	338.83	-17.50	0.0	125.00	300.00	0.578	0.054	0.478
342.10	2850.43	125.00	-26.15	-13.50	0.0	125.00	0.0	0.907	0.0	0.322
164.10	3156.76	150.67	331.26	-17.50	0.0	125.00	300.00	0.578	0.190	0.385
35.00	602.62	60.00	60.00	-6.00	0.0	60.00	60.00	3.000	0.0	0.0
Risulta	9094.06									

Modo	Frequenza	Periodo	Acc. Spettrale	M efficace X x g	%	M efficace Y x g	%	M efficace Z x g	%	Energia	Energia x v
	Hz	sec	g	daN		daN		daN			
1	2.782	0.360	0.310	1981.07	21.8	11.56	0.1	0.11	1.25e-03	0.0	0.0
2	3.602	0.278	0.310	4593.03	50.5	0.86	9.49e-03	25.04	0.3	0.0	0.0
3	3.927	0.255	0.310	216.78	2.4	1646.53	18.1	385.24	4.2	0.0	0.0
4	4.535	0.221	0.310	141.75	1.6	3635.36	40.0	46.22	0.5	0.0	0.0
5	4.646	0.215	0.310	72.60	0.8	147.82	1.6	1.49	1.64e-02	0.0	0.0
6	4.730	0.211	0.310	122.39	1.3	698.30	7.7	4.38	4.82e-02	0.0	0.0
7	5.358	0.187	0.310	103.38	1.1	307.97	3.4	1.49	1.64e-02	0.0	0.0
8	8.136	0.123	0.257	693.00	7.6	146.41	1.6	10.01	0.1	0.0	0.0
9	9.892	0.101	0.234	109.73	1.2	333.86	3.7	304.44	3.3	0.0	0.0
10	10.967	0.091	0.223	11.09	0.1	34.91	0.4	1265.67	13.9	0.0	0.0
11	11.770	0.085	0.216	150.83	1.7	276.60	3.0	365.67	4.0	0.0	0.0
12	12.943	0.077	0.208	37.02	0.4	140.79	1.5	1458.70	16.0	0.0	0.0
13	13.575	0.074	0.204	101.18	1.1	76.14	0.8	1888.61	20.8	0.0	0.0
14	14.978	0.067	0.196	45.08	0.5	4.14	4.56e-02	235.60	2.6	0.0	0.0
15	16.674	0.060	0.189	40.20	0.4	146.64	1.6	1100.82	12.1	0.0	0.0
16	17.945	0.056	0.184	362.25	4.0	408.81	4.5	237.82	2.6	0.0	0.0
17	18.531	0.054	0.182	131.64	1.4	384.74	4.2	62.94	0.7	0.0	0.0
18	20.456	0.049	0.177	11.92	0.1	46.69	0.5	0.16	1.76e-03	0.0	0.0
19	22.524	0.044	0.172	2.48	2.72e-02	35.46	0.4	1141.15	12.5	0.0	0.0
20	25.102	0.040	0.167	8.87	9.75e-02	383.56	4.2	221.78	2.4	0.0	0.0
Risulta				8936.28		8867.16		8757.34			
In percentuale				98.27		97.50		96.30			

CDC	Tipo	Sigla Id	Note
17	Edk	CDC=Ed (dinamico SLO) alfa=0.0 (ecc. +)	
			categoria suolo: C
			fattore di sito S = 1.000
			ordinata spettro (tratto Tb-Tc) = 0.250 g
			angolo di ingresso:0.0
			eccentricità aggiuntiva: positiva
			periodo proprio T1: 0.288 sec.
			numero di modi considerati: 20
			combinaz. modale: CQC

Viale Duca Alessandro n. 11 – 43123 Parma
Cell. 335 1403156 – E mail ing.concari@gmail.com
Sito web: studioaire.it – P.IVA 02561480340

Quota	M Sismica x g	Pos. GX	Pos. GY	E agg. X-X	E agg. Y-Y	Pos. KX	Pos. KY	(r/Ls)^2	rapp. ex/rx	rapp. ey/ry
cm	daN	cm	cm	cm	cm	cm	cm			
520.10	2484.25	132.23	338.83	0.0	-6.00	125.00	300.00	0.578	0.054	0.478
342.10	2850.43	125.00	-26.15	0.0	-6.00	125.00	0.0	0.907	0.0	0.322
164.10	3156.76	150.67	331.26	0.0	-6.00	125.00	300.00	0.578	0.190	0.385
35.00	602.62	60.00	60.00	0.0	0.0	60.00	60.00	3.000	0.0	0.0
Risulta	9094.06									

Modo	Frequenza	Periodo	Acc. Spettrale	M efficace X x g	%	M efficace Y x g	%	M efficace Z x g	%	Energia	Energia x v
	Hz	sec	g	daN		daN		daN			
1	2.779	0.360	0.250	1376.93	15.1	75.18	0.8	0.20	2.17e-03	0.0	0.0
2	3.473	0.288	0.250	5017.49	55.2	176.57	1.9	32.19	0.4	0.0	0.0
3	3.930	0.254	0.250	408.36	4.5	1517.20	16.7	350.41	3.9	0.0	0.0
4	4.450	0.225	0.250	3.22	3.54e-02	3225.11	35.5	78.22	0.9	0.0	0.0
5	4.642	0.215	0.250	149.92	1.6	20.89	0.2	0.50	5.53e-03	0.0	0.0
6	4.714	0.212	0.250	190.58	2.1	141.38	1.6	1.83	2.01e-02	0.0	0.0
7	5.278	0.189	0.250	65.31	0.7	1423.51	15.7	2.59	2.84e-02	0.0	0.0
8	8.004	0.125	0.212	442.43	4.9	342.29	3.8	16.07	0.2	0.0	0.0
9	9.997	0.100	0.190	161.15	1.8	129.50	1.4	262.45	2.9	0.0	0.0
10	10.818	0.092	0.183	15.07	0.2	1.84	2.03e-02	875.32	9.6	0.0	0.0
11	11.462	0.087	0.178	347.92	3.8	332.46	3.7	812.46	8.9	0.0	0.0
12	12.844	0.078	0.170	73.55	0.8	99.96	1.1	900.70	9.9	0.0	0.0
13	13.490	0.074	0.166	107.90	1.2	20.06	0.2	2477.22	27.2	0.0	0.0
14	15.455	0.065	0.158	60.84	0.7	9.30	0.1	191.62	2.1	0.0	0.0
15	16.607	0.060	0.154	72.25	0.8	206.34	2.3	1013.47	11.1	0.0	0.0
16	17.624	0.057	0.151	387.41	4.3	183.45	2.0	250.64	2.8	0.0	0.0
17	18.533	0.054	0.148	36.84	0.4	503.37	5.5	141.72	1.6	0.0	0.0
18	20.513	0.049	0.144	10.99	0.1	34.62	0.4	1.23	1.35e-02	0.0	0.0
19	22.695	0.044	0.139	3.51	3.86e-02	10.04	0.1	1238.97	13.6	0.0	0.0
20	25.484	0.039	0.135	3.27	3.60e-02	112.71	1.2	56.81	0.6	0.0	0.0
Risulta				8934.94		8565.79		8704.62			
In percentuale				98.25		94.19		95.72			

CDC	Tipo	Sigla Id	Note
18	Edk	CDC=Ed (dinamico SLO) alfa=0.0 (ecc. -)	
			categoria suolo: C
			fattore di sito S = 1.000
			ordinata spettro (tratto Tb-Tc) = 0.250 g
			angolo di ingresso:0.0
			eccentricità aggiuntiva: negativa
			periodo proprio T1: 0.279 sec.
			numero di modi considerati: 20
			combinaz. modale: CQC

Quota	M Sismica x g	Pos. GX	Pos. GY	E agg. X-X	E agg. Y-Y	Pos. KX	Pos. KY	(r/Ls)^2	rapp. ex/rx	rapp. ey/ry
cm	daN	cm	cm	cm	cm	cm	cm			
520.10	2484.25	132.23	338.83	0.0	6.00	125.00	300.00	0.578	0.054	0.478
342.10	2850.43	125.00	-26.15	0.0	6.00	125.00	0.0	0.907	0.0	0.322
164.10	3156.76	150.67	331.26	0.0	6.00	125.00	300.00	0.578	0.190	0.385
35.00	602.62	60.00	60.00	0.0	0.0	60.00	60.00	3.000	0.0	0.0
Risulta	9094.06									

Modo	Frequenza	Periodo	Acc. Spettrale	M efficace X x g	%	M efficace Y x g	%	M efficace Z x g	%	Energia	Energia x v
	Hz	sec	g	daN		daN		daN			
1	2.666	0.375	0.250	1831.42	20.1	62.04	0.7	0.11	1.24e-03	0.0	0.0
2	3.586	0.279	0.250	4117.12	45.3	429.12	4.7	67.23	0.7	0.0	0.0
3	3.978	0.251	0.250	875.80	9.6	1144.90	12.6	335.02	3.7	0.0	0.0
4	4.480	0.223	0.250	2.41	2.65e-02	3738.23	41.1	58.51	0.6	0.0	0.0
5	4.640	0.215	0.250	135.82	1.5	29.35	0.3	0.64	7.04e-03	0.0	0.0
6	4.715	0.212	0.250	183.92	2.0	202.47	2.2	1.99	2.19e-02	0.0	0.0
7	5.385	0.186	0.250	81.62	0.9	945.78	10.4	2.07	2.28e-02	0.0	0.0
8	7.478	0.134	0.220	687.42	7.6	112.62	1.2	4.51	4.96e-02	0.0	0.0
9	9.584	0.104	0.193	181.40	2.0	521.03	5.7	204.83	2.3	0.0	0.0
10	11.030	0.091	0.181	50.51	0.6	127.77	1.4	1582.09	17.4	0.0	0.0
11	12.090	0.083	0.174	92.63	1.0	100.00	1.1	276.07	3.0	0.0	0.0
12	12.746	0.078	0.170	33.83	0.4	94.27	1.0	348.04	3.8	0.0	0.0
13	13.380	0.075	0.167	42.50	0.5	6.07	6.68e-02	2818.65	31.0	0.0	0.0
14	14.944	0.067	0.160	44.06	0.5	12.20	0.1	279.76	3.1	0.0	0.0
15	16.641	0.060	0.154	25.08	0.3	170.64	1.9	1119.34	12.3	0.0	0.0
16	18.118	0.055	0.149	305.41	3.4	443.09	4.9	259.03	2.8	0.0	0.0
17	18.609	0.054	0.148	215.12	2.4	267.48	2.9	50.75	0.6	0.0	0.0
18	20.516	0.049	0.144	14.52	0.2	34.95	0.4	1.47	1.62e-02	0.0	0.0
19	22.692	0.044	0.139	3.78	4.16e-02	10.45	0.1	1235.60	13.6	0.0	0.0
20	25.440	0.039	0.135	3.57	3.93e-02	106.32	1.2	55.10	0.6	0.0	0.0
Risulta				8927.94		8558.77		8700.80			
In percentuale				98.17		94.11		95.68			

CDC	Tipo	Sigla Id	Note
19	Edk	CDC=Ed (dinamico SLO) alfa=90.00 (ecc. +)	
			categoria suolo: C
			fattore di sito S = 1.000
			ordinata spettro (tratto Tb-Tc) = 0.250 g
			angolo di ingresso:90.00
			eccentricità aggiuntiva: positiva
			periodo proprio T1: 0.225 sec.
			numero di modi considerati: 20
			combinaz. modale: CQC

Viale Duca Alessandro n. 11 – 43123 Parma
Cell. 335 1403156 – E mail ing.concari@gmail.com
Sito web: studioaire.it – P.IVA 02561480340

Quota	M Sismica x g	Pos. GX	Pos. GY	E agg. X-X	E agg. Y-Y	Pos. KX	Pos. KY	(r/Ls)^2	rapp. ex/rx	rapp. ey/ry
cm	daN	cm	cm	cm	cm	cm	cm			
520.10	2484.25	132.23	338.83	17.50	0.0	125.00	300.00	0.578	0.054	0.478
342.10	2850.43	125.00	-26.15	13.50	0.0	125.00	0.0	0.907	0.0	0.322
164.10	3156.76	150.67	331.26	17.50	0.0	125.00	300.00	0.578	0.190	0.385
35.00	602.62	60.00	60.00	6.00	0.0	60.00	60.00	3.000	0.0	0.0
Risulta	9094.06									

Modo	Frequenza	Periodo	Acc. Spettrale	M efficace X x g	%	M efficace Y x g	%	M efficace Z x g	%	Energia	Energia x v
	Hz	sec	g	daN		daN		daN			
1	2.642	0.379	0.250	1217.09	13.4	375.42	4.1	0.97	1.07e-02	0.0	0.0
2	3.454	0.290	0.250	4754.49	52.3	614.41	6.8	47.46	0.5	0.0	0.0
3	3.994	0.250	0.250	767.55	8.4	755.78	8.3	352.99	3.9	0.0	0.0
4	4.442	0.225	0.250	78.61	0.9	2881.23	31.7	62.10	0.7	0.0	0.0
5	4.639	0.216	0.250	168.25	1.9	1.61	1.77e-02	0.30	3.26e-03	0.0	0.0
6	4.707	0.212	0.250	198.15	2.2	46.07	0.5	1.11	1.22e-02	0.0	0.0
7	5.381	0.186	0.250	27.28	0.3	2103.35	23.1	4.25	4.67e-02	0.0	0.0
8	7.437	0.134	0.220	480.40	5.3	202.35	2.2	5.47	6.02e-02	0.0	0.0
9	9.650	0.104	0.193	261.90	2.9	313.48	3.4	173.98	1.9	0.0	0.0
10	10.971	0.091	0.182	7.69	8.45e-02	39.31	0.4	1279.76	14.1	0.0	0.0
11	11.397	0.088	0.179	264.50	2.9	205.00	2.3	513.87	5.7	0.0	0.0
12	12.724	0.079	0.170	35.79	0.4	56.09	0.6	214.10	2.4	0.0	0.0
13	13.335	0.075	0.167	33.09	0.4	0.09	9.49e-04	3083.73	33.9	0.0	0.0
14	15.318	0.065	0.158	74.70	0.8	29.37	0.3	269.06	3.0	0.0	0.0
15	16.617	0.060	0.154	61.65	0.7	193.78	2.1	1030.09	11.3	0.0	0.0
16	17.688	0.057	0.151	440.42	4.8	137.70	1.5	219.62	2.4	0.0	0.0
17	18.558	0.054	0.148	37.44	0.4	487.17	5.4	158.27	1.7	0.0	0.0
18	20.548	0.049	0.143	13.03	0.1	26.64	0.3	4.69	5.16e-02	0.0	0.0
19	22.777	0.044	0.139	3.73	4.10e-02	3.01	3.31e-02	1243.47	13.7	0.0	0.0
20	23.718	0.042	0.138	2.14	2.35e-02	27.47	0.3	43.20	0.5	0.0	0.0
Risulta				8927.88		8499.31		8708.49			
In percentuale				98.17		93.46		95.76			

CDC	Tipo	Sigla Id	Note
20	Edk	CDC=Ed (dinamico SLO) alfa=90.00 (ecc. -)	
			categoria suolo: C
			fattore di sito S = 1.000
			ordinata spettro (tratto Tb-Tc) = 0.250 g
			angolo di ingresso:90.00
			eccentricità aggiuntiva: negativa
			periodo proprio T1: 0.221 sec.
			numero di modi considerati: 20
			combinaz. modale: CQC

Quota	M Sismica x g	Pos. GX	Pos. GY	E agg. X-X	E agg. Y-Y	Pos. KX	Pos. KY	(r/Ls)^2	rapp. ex/rx	rapp. ey/ry
cm	daN	cm	cm	cm	cm	cm	cm			
520.10	2484.25	132.23	338.83	-17.50	0.0	125.00	300.00	0.578	0.054	0.478
342.10	2850.43	125.00	-26.15	-13.50	0.0	125.00	0.0	0.907	0.0	0.322
164.10	3156.76	150.67	331.26	-17.50	0.0	125.00	300.00	0.578	0.190	0.385
35.00	602.62	60.00	60.00	-6.00	0.0	60.00	60.00	3.000	0.0	0.0
Risulta	9094.06									

Modo	Frequenza	Periodo	Acc. Spettrale	M efficace X x g	%	M efficace Y x g	%	M efficace Z x g	%	Energia	Energia x v
	Hz	sec	g	daN		daN		daN			
1	2.782	0.360	0.250	1981.07	21.8	11.56	0.1	0.11	1.25e-03	0.0	0.0
2	3.602	0.278	0.250	4593.03	50.5	0.86	9.49e-03	25.04	0.3	0.0	0.0
3	3.927	0.255	0.250	216.78	2.4	1646.53	18.1	385.24	4.2	0.0	0.0
4	4.535	0.221	0.250	141.75	1.6	3635.36	40.0	46.22	0.5	0.0	0.0
5	4.646	0.215	0.250	72.60	0.8	147.82	1.6	1.49	1.64e-02	0.0	0.0
6	4.730	0.211	0.250	122.39	1.3	698.30	7.7	4.38	4.82e-02	0.0	0.0
7	5.358	0.187	0.250	103.38	1.1	307.97	3.4	1.49	1.64e-02	0.0	0.0
8	8.136	0.123	0.210	693.00	7.6	146.41	1.6	10.01	0.1	0.0	0.0
9	9.892	0.101	0.190	109.73	1.2	333.86	3.7	304.44	3.3	0.0	0.0
10	10.967	0.091	0.182	11.09	0.1	34.91	0.4	1265.67	13.9	0.0	0.0
11	11.770	0.085	0.176	150.83	1.7	276.60	3.0	365.67	4.0	0.0	0.0
12	12.943	0.077	0.169	37.02	0.4	140.79	1.5	1458.70	16.0	0.0	0.0
13	13.575	0.074	0.166	101.18	1.1	76.14	0.8	1888.61	20.8	0.0	0.0
14	14.978	0.067	0.160	45.08	0.5	4.14	4.56e-02	235.60	2.6	0.0	0.0
15	16.674	0.060	0.154	40.20	0.4	146.64	1.6	1100.82	12.1	0.0	0.0
16	17.945	0.056	0.150	362.25	4.0	408.81	4.5	237.82	2.6	0.0	0.0
17	18.531	0.054	0.148	131.64	1.4	384.74	4.2	62.94	0.7	0.0	0.0
18	20.456	0.049	0.144	11.92	0.1	46.69	0.5	0.16	1.76e-03	0.0	0.0
19	22.524	0.044	0.140	2.48	2.72e-02	35.46	0.4	1141.15	12.5	0.0	0.0
20	25.102	0.040	0.136	8.87	9.75e-02	383.56	4.2	221.78	2.4	0.0	0.0
Risulta				8936.28		8867.16		8757.34			
In percentuale				98.27		97.50		96.30			

Cmb	Pilas.	1000 etaT/h	etaT	inter. h	Pilas.	1000 etaT/h	etaT	inter. h	Pilas.	1000 etaT/h	etaT	inter. h
			cm	cm			cm	cm			cm	cm
185	2	9.23	0.32	35.0	4	1.54	0.53	342.1	5	10.12	0.35	35.0
	16	1.72	0.61	356.0	17	1.01	0.17	164.1	46	1.02	0.17	164.1
	47	2.14	0.76	356.0	48	2.26	0.77	342.1				
186	2	8.32	0.29	35.0	4	1.21	0.41	342.1	5	7.78	0.27	35.0
	16	2.42	0.86	356.0	17	1.42	0.23	164.1	46	1.19	0.20	164.1

Viale Duca Alessandro n. 11 – 43123 Parma
Cell. 335 1403156 – E mail ing.concari@gmail.com
Sito web: studioaire.it – P.IVA 02561480340

	47	2.08	0.74	356.0	48	1.53	0.52	342.1				
187	2	7.96	0.28	35.0	4	1.39	0.48	342.1	5	7.55	0.26	35.0
	16	2.86	1.02	356.0	17	1.75	0.29	164.1	46	1.04	0.17	
164.1												
	47	1.70	0.60	356.0	48	1.20	0.41	342.1				
188	2	8.86	0.31	35.0	4	1.59	0.54	342.1	5	9.80	0.34	35.0
	16	2.10	0.75	356.0	17	1.24	0.20	164.1	46	0.81	0.13	
164.1												
	47	1.68	0.60	356.0	48	1.87	0.64	342.1				
189	2	9.89	0.35	35.0	4	1.27	0.44	342.1	5	11.17	0.39	35.0
	16	1.94	0.69	356.0	17	1.13	0.19	164.1	46	1.15	0.19	
164.1												
	47	2.28	0.81	356.0	48	2.06	0.70	342.1				
190	2	7.67	0.27	35.0	4	1.46	0.50	342.1	5	6.74	0.24	35.0
	16	2.22	0.79	356.0	17	1.32	0.22	164.1	46	1.06	0.17	
164.1												
	47	1.89	0.67	356.0	48	1.76	0.60	342.1				
191	2	7.31	0.26	35.0	4	1.62	0.55	342.1	5	6.52	0.23	35.0
	16	2.71	0.97	356.0	17	1.69	0.28	164.1	46	0.92	0.15	
164.1												
	47	1.47	0.52	356.0	48	1.46	0.50	342.1				
192	2	9.51	0.33	35.0	4	1.34	0.46	342.1	5	10.85	0.38	35.0
	16	2.27	0.81	356.0	17	1.32	0.22	164.1	46	0.94	0.15	
164.1												
	47	1.85	0.66	356.0	48	1.64	0.56	342.1				
193	2	8.91	0.31	35.0	4	1.41	0.48	342.1	5	9.88	0.35	35.0
	16	1.84	0.65	356.0	17	1.00	0.16	164.1	46	0.98	0.16	
164.1												
	47	2.22	0.79	356.0	48	2.30	0.79	342.1				
194	2	8.00	0.28	35.0	4	1.10	0.38	342.1	5	7.55	0.26	35.0
	16	2.57	0.91	356.0	17	1.44	0.24	164.1	46	1.15	0.19	
164.1												
	47	2.11	0.75	356.0	48	1.56	0.53	342.1				
195	2	7.63	0.27	35.0	4	1.32	0.45	342.1	5	7.34	0.26	35.0
	16	3.07	1.09	356.0	17	1.80	0.30	164.1	46	0.99	0.16	
164.1												
	47	1.69	0.60	356.0	48	1.17	0.40	342.1				
196	2	8.53	0.30	35.0	4	1.48	0.51	342.1	5	9.57	0.33	35.0
	16	2.30	0.82	356.0	17	1.28	0.21	164.1	46	0.76	0.12	
164.1												
	47	1.75	0.62	356.0	48	1.88	0.64	342.1				
197	2	9.57	0.33	35.0	4	1.15	0.39	342.1	5	10.93	0.38	35.0
	16	2.04	0.73	356.0	17	1.12	0.18	164.1	46	1.11	0.18	
164.1												
	47	2.35	0.84	356.0	48	2.11	0.72	342.1				
198	2	7.35	0.26	35.0	4	1.35	0.46	342.1	5	6.51	0.23	35.0
	16	2.39	0.85	356.0	17	1.35	0.22	164.1	46	1.02	0.17	
164.1												
	47	1.93	0.69	356.0	48	1.77	0.61	342.1				
199	2	6.98	0.24	35.0	4	1.54	0.53	342.1	5	6.32	0.22	35.0
	16	2.93	1.04	356.0	17	1.74	0.29	164.1	46	0.86	0.14	
164.1												
	47	1.47	0.52	356.0	48	1.41	0.48	342.1				
200	2	9.19	0.32	35.0	4	1.24	0.43	342.1	5	10.61	0.37	35.0
	16	2.45	0.87	356.0	17	1.35	0.22	164.1	46	0.89	0.15	
164.1												
	47	1.91	0.68	356.0	48	1.67	0.57	342.1				
201	2	4.31	0.15	35.0	4	1.22	0.42	342.1	5	6.83	0.24	35.0
	16	1.03	0.37	356.0	17	0.85	0.14	164.1	46	0.47	0.08	
164.1												
	47	1.55	0.55	356.0	48	1.96	0.67	342.1				
202	2	1.16	0.04	35.0	4	0.44	0.15	342.1	5	1.33	0.05	35.0
	16	1.70	0.61	356.0	17	1.05	0.17	164.1	46	0.73	0.12	
164.1												
	47	1.30	0.46	356.0	48	0.54	0.18	342.1				
203	2	1.01	0.04	35.0	4	0.92	0.31	342.1	5	2.13	0.07	35.0
	16	2.23	0.79	356.0	17	1.49	0.24	164.1	46	0.72	0.12	
164.1												
	47	1.39	0.49	356.0	48	1.04	0.36	342.1				
204	2	3.90	0.14	35.0	4	1.01	0.35	342.1	5	6.40	0.22	35.0
	16	0.36	0.13	356.0	17	0.27	0.04	164.1	46	0.14	0.02	
164.1												
	47	1.12	0.40	356.0	48	1.52	0.52	342.1				
205	2	4.22	0.15	35.0	4	1.18	0.40	342.1	5	6.75	0.24	35.0
	16	0.95	0.34	356.0	17	0.82	0.13	164.1	46	0.48	0.08	
164.1												
	47	1.60	0.57	356.0	48	1.98	0.68	342.1				
206	2	1.04	0.04	35.0	4	0.47	0.16	342.1	5	1.40	0.05	35.0
	16	1.76	0.62	356.0	17	1.06	0.17	164.1	46	0.72	0.12	
164.1												
	47	1.27	0.45	356.0	48	0.51	0.17	342.1				
207	2	0.90	0.03	35.0	4	0.94	0.32	342.1	5	2.20	0.08	35.0
	16	2.30	0.82	356.0	17	1.51	0.25	164.1	46	0.71	0.12	
164.1												
	47	1.34	0.48	356.0	48	1.01	0.34	342.1				
208	2	3.80	0.13	35.0	4	0.98	0.33	342.1	5	6.32	0.22	35.0
	16	0.32	0.11	356.0	17	0.26	0.04	164.1	46	0.16	0.03	
164.1												
	47	1.17	0.42	356.0	48	1.53	0.52	342.1				
209	2	6.48	0.23	35.0	4	0.67	0.23	342.1	5	10.31	0.36	35.0
	16	1.20	0.43	356.0	17	1.00	0.16	164.1	46	0.69	0.11	
164.1												

Viale Duca Alessandro n. 11 – 43123 Parma
Cell. 335 1403156 – E mail ing.concari@gmail.com
Sito web: studioaire.it – P.IVA 02561480340

	47	1.60	0.57	356.0	48	1.52	0.52	342.1				
210	2	0.50	0.02	35.0	4	0.78	0.27	342.1	5	4.27	0.15	35.0
	16	1.21	0.43	356.0	17	0.85	0.14	164.1	46	0.28	0.05	
164.1												
	47	0.55	0.19	356.0	48	0.74	0.25	342.1				
211	2	1.07	0.04	35.0	4	1.10	0.38	342.1	5	4.83	0.17	35.0
	16	1.93	0.69	356.0	17	1.42	0.23	164.1	46	0.49	0.08	
164.1												
	47	0.85	0.30	356.0	48	1.05	0.36	342.1				
212	2	6.08	0.21	35.0	4	0.20	0.07	342.1	5	9.90	0.35	35.0
	16	0.58	0.20	356.0	17	0.41	0.07	164.1	46	0.32	0.05	
164.1												
	47	1.11	0.39	356.0	48	1.01	0.34	342.1				
213	2	6.38	0.22	35.0	4	0.65	0.22	342.1	5	10.23	0.36	35.0
	16	1.13	0.40	356.0	17	0.97	0.16	164.1	46	0.68	0.11	
164.1												
	47	1.64	0.58	356.0	48	1.57	0.54	342.1				
214	2	0.63	0.02	35.0	4	0.76	0.26	342.1	5	4.38	0.15	35.0
	16	1.28	0.46	356.0	17	0.87	0.14	164.1	46	0.27	0.04	
164.1												
	47	0.51	0.18	356.0	48	0.69	0.23	342.1				
215	2	1.16	0.04	35.0	4	1.09	0.37	342.1	5	4.93	0.17	35.0
	16	2.01	0.72	356.0	17	1.45	0.24	164.1	46	0.48	0.08	
164.1												
	47	0.80	0.29	356.0	48	0.99	0.34	342.1				
216	2	5.98	0.21	35.0	4	0.17	0.06	342.1	5	9.83	0.34	35.0
	16	0.54	0.19	356.0	17	0.38	0.06	164.1	46	0.31	0.05	
164.1												
	47	1.14	0.41	356.0	48	1.05	0.36	342.1				
217	2	7.48	0.26	35.0	4	1.24	0.42	342.1	5	8.19	0.29	35.0
	16	1.36	0.48	356.0	17	0.81	0.13	164.1	46	0.85	0.14	
164.1												
	47	1.77	0.63	356.0	48	1.86	0.64	342.1				
218	2	6.74	0.24	35.0	4	0.96	0.33	342.1	5	6.30	0.22	35.0
	16	1.91	0.68	356.0	17	1.13	0.18	164.1	46	0.98	0.16	
164.1												
	47	1.71	0.61	356.0	48	1.27	0.44	342.1				
219	2	6.38	0.22	35.0	4	1.15	0.39	342.1	5	6.06	0.21	35.0
	16	2.36	0.84	356.0	17	1.45	0.24	164.1	46	0.84	0.14	
164.1												
	47	1.34	0.48	356.0	48	0.94	0.32	342.1				
220	2	7.10	0.25	35.0	4	1.29	0.44	342.1	5	7.87	0.28	35.0
	16	1.74	0.62	356.0	17	1.03	0.17	164.1	46	0.64	0.10	
164.1												
	47	1.28	0.46	356.0	48	1.47	0.50	342.1				
221	2	8.00	0.28	35.0	4	1.03	0.35	342.1	5	9.03	0.32	35.0
	16	1.54	0.55	356.0	17	0.91	0.15	164.1	46	0.95	0.16	
164.1												
	47	1.88	0.67	356.0	48	1.70	0.58	342.1				
222	2	6.22	0.22	35.0	4	1.17	0.40	342.1	5	5.45	0.19	35.0
	16	1.75	0.62	356.0	17	1.04	0.17	164.1	46	0.87	0.14	
164.1												
	47	1.56	0.56	356.0	48	1.45	0.50	342.1				
223	2	5.85	0.20	35.0	4	1.32	0.45	342.1	5	5.24	0.18	35.0
	16	2.24	0.80	356.0	17	1.40	0.23	164.1	46	0.73	0.12	
164.1												
	47	1.15	0.41	356.0	48	1.15	0.39	342.1				
224	2	7.63	0.27	35.0	4	1.09	0.37	342.1	5	8.71	0.30	35.0
	16	1.87	0.67	356.0	17	1.10	0.18	164.1	46	0.75	0.12	
164.1												
	47	1.43	0.51	356.0	48	1.28	0.44	342.1				
225	2	7.22	0.25	35.0	4	1.14	0.39	342.1	5	7.99	0.28	35.0
	16	1.45	0.52	356.0	17	0.79	0.13	164.1	46	0.82	0.14	
164.1												
	47	1.83	0.65	356.0	48	1.89	0.65	342.1				
226	2	6.49	0.23	35.0	4	0.87	0.30	342.1	5	6.11	0.21	35.0
	16	2.03	0.72	356.0	17	1.14	0.19	164.1	46	0.95	0.16	
164.1												
	47	1.74	0.62	356.0	48	1.30	0.44	342.1				
227	2	6.12	0.21	35.0	4	1.10	0.38	342.1	5	5.89	0.21	35.0
	16	2.53	0.90	356.0	17	1.49	0.24	164.1	46	0.79	0.13	
164.1												
	47	1.32	0.47	356.0	48	0.91	0.31	342.1				
228	2	6.84	0.24	35.0	4	1.21	0.41	342.1	5	7.68	0.27	35.0
	16	1.90	0.68	356.0	17	1.07	0.18	164.1	46	0.60	0.10	
164.1												
	47	1.35	0.48	356.0	48	1.47	0.50	342.1				
229	2	7.75	0.27	35.0	4	0.93	0.32	342.1	5	8.84	0.31	35.0
	16	1.62	0.58	356.0	17	0.89	0.15	164.1	46	0.93	0.15	
164.1												
	47	1.94	0.69	356.0	48	1.75	0.60	342.1				
230	2	5.96	0.21	35.0	4	1.08	0.37	342.1	5	5.27	0.18	35.0
	16	1.88	0.67	356.0	17	1.06	0.17	164.1	46	0.84	0.14	
164.1												
	47	1.60	0.57	356.0	48	1.46	0.50	342.1				
231	2	5.59	0.20	35.0	4	1.26	0.43	342.1	5	5.08	0.18	35.0
	16	2.42	0.86	356.0	17	1.45	0.24	164.1	46	0.69	0.11	
164.1												
	47	1.14	0.41	356.0	48	1.11	0.38	342.1				
232	2	7.37	0.26	35.0	4	1.02	0.35	342.1	5	8.52	0.30	35.0
	16	2.02	0.72	356.0	17	1.13	0.18	164.1	46	0.71	0.12	
164.1												

Viale Duca Alessandro n. 11 – 43123 Parma
Cell. 335 1403156 – E mail ing.concari@gmail.com
Sito web: studioaire.it – P.IVA 02561480340

	47	1.49	0.53	356.0	48	1.30	0.45	342.1			
233	2	3.52	0.12	35.0	4	1.01	0.35	342.1	5	5.55	0.19 35.0
	16	0.91	0.32	356.0	17	0.74	0.12	164.1	46	0.42	0.07
164.1											
	47	1.29	0.46	356.0	48	1.63	0.56	342.1			
234	2	0.98	0.03	35.0	4	0.31	0.11	342.1	5	1.00	0.03 35.0
	16	1.33	0.47	356.0	17	0.82	0.13	164.1	46	0.60	0.10
164.1											
	47	1.05	0.37	356.0	48	0.38	0.13	342.1			
235	2	0.83	0.03	35.0	4	0.79	0.27	342.1	5	1.80	0.06 35.0
	16	1.86	0.66	356.0	17	1.25	0.21	164.1	46	0.60	0.10
164.1											
	47	1.13	0.40	356.0	48	0.89	0.30	342.1			
236	2	3.11	0.11	35.0	4	0.81	0.28	342.1	5	5.12	0.18 35.0
	16	0.26	0.09	356.0	17	0.18	0.03	164.1	46	0.13	0.02
164.1											
	47	0.86	0.31	356.0	48	1.18	0.40	342.1			
237	2	3.45	0.12	35.0	4	0.98	0.34	342.1	5	5.48	0.19 35.0
	16	0.84	0.30	356.0	17	0.72	0.12	164.1	46	0.43	0.07
164.1											
	47	1.33	0.47	356.0	48	1.64	0.56	342.1			
238	2	0.89	0.03	35.0	4	0.34	0.11	342.1	5	1.06	0.04 35.0
	16	1.37	0.49	356.0	17	0.83	0.14	164.1	46	0.59	0.10
164.1											
	47	1.02	0.36	356.0	48	0.37	0.13	342.1			
239	2	0.75	0.03	35.0	4	0.81	0.28	342.1	5	1.86	0.06 35.0
	16	1.91	0.68	356.0	17	1.27	0.21	164.1	46	0.58	0.10
164.1											
	47	1.10	0.39	356.0	48	0.86	0.29	342.1			
240	2	3.03	0.11	35.0	4	0.78	0.27	342.1	5	5.06	0.18 35.0
	16	0.24	0.09	356.0	17	0.18	0.03	164.1	46	0.14	0.02
164.1											
	47	0.90	0.32	356.0	48	1.19	0.41	342.1			
241	2	5.26	0.18	35.0	4	0.59	0.20	342.1	5	8.35	0.29 35.0
	16	1.04	0.37	356.0	17	0.87	0.14	164.1	46	0.60	0.10
164.1											
	47	1.34	0.48	356.0	48	1.28	0.44	342.1			
242	2	0.39	0.01	35.0	4	0.61	0.21	342.1	5	3.40	0.12 35.0
	16	0.91	0.32	356.0	17	0.63	0.10	164.1	46	0.24	0.04
164.1											
	47	0.43	0.15	356.0	48	0.58	0.20	342.1			
243	2	0.93	0.03	35.0	4	0.93	0.32	342.1	5	3.95	0.14 35.0
	16	1.63	0.58	356.0	17	1.20	0.20	164.1	46	0.43	0.07
164.1											
	47	0.73	0.26	356.0	48	0.89	0.30	342.1			
244	2	4.86	0.17	35.0	4	0.13	0.04	342.1	5	7.94	0.28 35.0
	16	0.43	0.15	356.0	17	0.28	0.05	164.1	46	0.24	0.04
164.1											
	47	0.85	0.30	356.0	48	0.76	0.26	342.1			
245	2	5.18	0.18	35.0	4	0.57	0.20	342.1	5	8.29	0.29 35.0
	16	0.98	0.35	356.0	17	0.84	0.14	164.1	46	0.59	0.10
164.1											
	47	1.37	0.49	356.0	48	1.31	0.45	342.1			
246	2	0.49	0.02	35.0	4	0.59	0.20	342.1	5	3.48	0.12 35.0
	16	0.97	0.34	356.0	17	0.65	0.11	164.1	46	0.23	0.04
164.1											
	47	0.40	0.14	356.0	48	0.54	0.18	342.1			
247	2	1.01	0.04	35.0	4	0.92	0.31	342.1	5	4.03	0.14 35.0
	16	1.69	0.60	356.0	17	1.22	0.20	164.1	46	0.42	0.07
164.1											
	47	0.69	0.24	356.0	48	0.84	0.29	342.1			
248	2	4.78	0.17	35.0	4	0.10	0.03	342.1	5	7.88	0.28 35.0
	16	0.41	0.15	356.0	17	0.26	0.04	164.1	46	0.23	0.04
164.1											
	47	0.87	0.31	356.0	48	0.80	0.27	342.1			

Cmb	**1000 etaT/h**
	11.17

MODELLO 1 VANO ASCENSORE

CDC	**Tipo**	**Sigla Id**	**Note**
4	Edk	CDC=Ed (dinamico SLU) alfa=0.0 (ecc. +)	
			categoria suolo: C
			fattore di sito S = 1.000
			ordinata spettro (tratto Tb-Tc) = 0.471 g
			angolo di ingresso:0.0
			eccentricità aggiuntiva: positiva
			periodo proprio T1: 0.567 sec.
			fattore q: 1.500
			amplificazione ND (non dissipativi): 1.500
			fattore per spost. mu d: 1.506
			classe di duttilità CD: B
			numero di modi considerati: 9
			combinaz. modale: CQC

Viale Duca Alessandro n. 11 – 43123 Parma
Cell. 335 1403156 – E mail ing.concari@gmail.com
Sito web: studioaire.it – P.IVA 02561480340

Quota	M Sismica x g	Pos. GX	Pos. GY	E agg. X-X	E agg. Y-Y	Pos. KX	Pos. KY	(r/Ls)^2	rapp. ex/rx	rapp. ey/ry
m	daN	m	m	m	m	m	m			
10.30	1326.80	2.81	1.14	0.0	-0.14	2.50	1.26	1.018	0.113	0.070
6.80	8588.24	2.17	1.03	0.0	-0.14	2.50	1.26	1.018	0.120	0.139
3.30	1.370e+04	2.36	1.16	0.0	-0.14	2.50	1.33	0.982	0.035	0.105
2.83	5751.43	2.66	1.36	0.0	-0.14	2.50	1.33	0.982	0.039	0.016
2.36	5391.97	2.70	1.29	0.0	-0.14	2.51	1.24	1.000	0.048	0.034
1.89	5032.50	2.75	1.21	0.0	-0.14	2.51	1.24	1.000	0.059	0.014
1.41	5032.50	2.75	1.21	0.0	-0.14	2.51	1.24	1.000	0.059	0.014
0.94	5032.50	2.75	1.21	0.0	-0.14	2.51	1.24	1.000	0.059	0.014
0.47	5032.50	2.75	1.21	0.0	-0.14	2.51	1.24	1.000	0.059	0.014
Risulta	5.489e+04									

Modo	Frequenza	Periodo	Acc. Spettrale	M efficace X x g	%	M efficace Y x g	%	M efficace Z x g	%	Energia	Energia x v
	Hz	sec	g	daN		daN		daN			
1	1.085	0.922	0.293	0.46	8.36e-04	3.307e+04	60.2	72.01	0.1	0.0	0.0
2	1.764	0.567	0.471	3.237e+04	59.0	4.65	8.47e-03	5.62	1.02e-02	0.0	0.0
3	3.136	0.319	0.471	178.06	0.3	242.16	0.4	6.09	1.11e-02	0.0	0.0
4	4.685	0.213	0.471	161.02	0.3	1.114e+04	20.3	445.69	0.8	0.0	0.0
5	5.441	0.184	0.463	8065.02	14.7	211.77	0.4	2476.20	4.5	0.0	0.0
6	5.584	0.179	0.459	564.77	1.0	752.28	1.4	5.112e+04	93.1	0.0	0.0
7	7.323	0.137	0.415	1.296e+04	23.6	175.15	0.3	35.28	6.43e-02	0.0	0.0
8	8.650	0.116	0.394	46.63	8.50e-02	7358.92	13.4	609.18	1.1	0.0	0.0
9	10.520	0.095	0.373	238.96	0.4	1585.32	2.9	100.49	0.2	0.0	0.0
Risulta				5.459e+04		5.454e+04		5.487e+04			
In percentuale				99.44		99.35		99.96			

CDC	Tipo	Sigla Id	Note
5	Edk	CDC=Ed (dinamico SLU) alfa=0.0 (ecc. -)	
			categoria suolo: C
			fattore di sito S = 1.000
			ordinata spettro (tratto Tb-Tc) = 0.471 g
			angolo di ingresso:0.0
			eccentricità aggiuntiva: negativa
			periodo proprio T1: 0.564 sec.
			fattore q: 1.500
			amplificazione ND (non dissipativi): 1.500
			fattore per spost. mu d: 1.509
			classe di duttilità CD: B
			numero di modi considerati: 9
			combinaz. modale: CQC

Quota	M Sismica x g	Pos. GX	Pos. GY	E agg. X-X	E agg. Y-Y	Pos. KX	Pos. KY	(r/Ls)^2	rapp. ex/rx	rapp. ey/ry
m	daN	m	m	m	m	m	m			
10.30	1326.80	2.81	1.14	0.0	0.14	2.50	1.26	1.018	0.113	0.070
6.80	8588.24	2.17	1.03	0.0	0.14	2.50	1.26	1.018	0.120	0.139
3.30	1.370e+04	2.36	1.16	0.0	0.14	2.50	1.33	0.982	0.035	0.105
2.83	5751.43	2.66	1.36	0.0	0.14	2.50	1.33	0.982	0.039	0.016
2.36	5391.97	2.70	1.29	0.0	0.14	2.51	1.24	1.000	0.048	0.034
1.89	5032.50	2.75	1.21	0.0	0.14	2.51	1.24	1.000	0.059	0.014
1.41	5032.50	2.75	1.21	0.0	0.14	2.51	1.24	1.000	0.059	0.014
0.94	5032.50	2.75	1.21	0.0	0.14	2.51	1.24	1.000	0.059	0.014
0.47	5032.50	2.75	1.21	0.0	0.14	2.51	1.24	1.000	0.059	0.014
Risulta	5.489e+04									

Modo	Frequenza	Periodo	Acc. Spettrale	M efficace X x g	%	M efficace Y x g	%	M efficace Z x g	%	Energia	Energia x v
	Hz	sec	g	daN		daN		daN			
1	1.085	0.922	0.293	0.16	2.93e-04	3.307e+04	60.2	71.99	0.1	0.0	0.0
2	1.774	0.564	0.471	3.250e+04	59.2	1.70	3.10e-03	6.08	1.11e-02	0.0	0.0
3	3.225	0.310	0.471	87.51	0.2	375.44	0.7	5.40	9.84e-03	0.0	0.0
4	4.742	0.211	0.471	80.95	0.1	1.137e+04	20.7	496.54	0.9	0.0	0.0
5	5.574	0.179	0.459	40.19	7.32e-02	531.68	1.0	5.296e+04	96.5	0.0	0.0
6	5.902	0.169	0.449	9737.23	17.7	0.75	1.37e-03	470.77	0.9	0.0	0.0
7	6.626	0.151	0.430	9185.47	16.7	564.35	1.0	206.73	0.4	0.0	0.0
8	8.652	0.116	0.394	626.50	1.1	7959.17	14.5	287.84	0.5	0.0	0.0
9	9.402	0.106	0.384	2306.35	4.2	151.90	0.3	371.09	0.7	0.0	0.0
Risulta				5.457e+04		5.403e+04		5.487e+04			
In percentuale				99.41		98.42		99.97			

CDC	Tipo	Sigla Id	Note
6	Edk	CDC=Ed (dinamico SLU) alfa=90.00 (ecc. +)	
			categoria suolo: C
			fattore di sito S = 1.000
			ordinata spettro (tratto Tb-Tc) = 0.471 g
			angolo di ingresso:90.00

Viale Duca Alessandro n. 11 – 43123 Parma
Cell. 335 1403156 – E mail ing.concari@gmail.com
Sito web: studioaire.it – P.IVA 02561480340

CDC	Tipo	Sigla Id	Note
			eccentricità aggiuntiva: positiva
			periodo proprio T1: 0.922 sec.
			fattore q: 1.500
			amplificazione ND (non dissipativi): 1.500
			fattore per spost. mu d: 1.500
			classe di duttilità CD: B
			numero di modi considerati: 9
			combinaz. modale: CQC

Quota	M Sismica x g	Pos. GX	Pos. GY	E agg. X-X	E agg. Y-Y	Pos. KX	Pos. KY	(r/Ls)^2	rapp. ex/rx	rapp. ey/ry
m	daN	m	m	m	m	m	m			
10.30	1326.80	2.81	1.14	0.25	0.0	2.50	1.26	1.018	0.113	0.070
6.80	8588.24	2.17	1.03	0.25	0.0	2.50	1.26	1.018	0.120	0.139
3.30	1.370e+04	2.36	1.16	0.25	0.0	2.50	1.33	0.982	0.035	0.105
2.83	5751.43	2.66	1.36	0.25	0.0	2.50	1.33	0.982	0.039	0.016
2.36	5391.97	2.70	1.29	0.25	0.0	2.51	1.24	1.000	0.048	0.034
1.89	5032.50	2.75	1.21	0.25	0.0	2.51	1.24	1.000	0.059	0.014
1.41	5032.50	2.75	1.21	0.25	0.0	2.51	1.24	1.000	0.059	0.014
0.94	5032.50	2.75	1.21	0.25	0.0	2.51	1.24	1.000	0.059	0.014
0.47	5032.50	2.75	1.21	0.25	0.0	2.51	1.24	1.000	0.059	0.014
Risulta	5.489e+04									

Modo	Frequenza	Periodo	Acc. Spettrale	M efficace X x g	%	M efficace Y x g	%	M efficace Z x g	%	Energia	Energia x v
	Hz	sec	g	daN		daN		daN			
1	1.085	0.922	0.293	0.01	2.11e-05	3.314e+04	60.4	72.00	0.1	0.0	0.0
2	1.771	0.565	0.471	3.243e+04	59.1	1.62	2.96e-03	6.26	1.14e-02	0.0	0.0
3	3.126	0.320	0.471	112.85	0.2	304.57	0.6	0.11	2.03e-04	0.0	0.0
4	4.560	0.219	0.471	145.36	0.3	1.063e+04	19.4	307.40	0.6	0.0	0.0
5	5.399	0.185	0.465	4651.29	8.5	7.66	1.39e-02	4564.56	8.3	0.0	0.0
6	5.593	0.179	0.458	793.76	1.4	541.48	1.0	4.914e+04	89.5	0.0	0.0
7	6.836	0.146	0.425	1.579e+04	28.8	202.38	0.4	192.05	0.3	0.0	0.0
8	8.269	0.121	0.399	234.19	0.4	9059.44	16.5	169.44	0.3	0.0	0.0
9	9.926	0.101	0.379	116.71	0.2	38.39	6.99e-02	425.67	0.8	0.0	0.0
Risulta				5.427e+04		5.392e+04		5.488e+04			
In percentuale				98.87		98.23		99.98			

CDC	Tipo	Sigla Id	Note
7	Edk	CDC=Ed (dinamico SLU) alfa=90.00 (ecc. -)	
			categoria suolo: C
			fattore di sito S = 1.000
			ordinata spettro (tratto Tb-Tc) = 0.471 g
			angolo di ingresso:90.00
			eccentricità aggiuntiva: negativa
			periodo proprio T1: 0.923 sec.
			fattore q: 1.500
			amplificazione ND (non dissipativi): 1.500
			fattore per spost. mu d: 1.500
			classe di duttilità CD: B
			numero di modi considerati: 9
			combinaz. modale: CQC

Quota	M Sismica x g	Pos. GX	Pos. GY	E agg. X-X	E agg. Y-Y	Pos. KX	Pos. KY	(r/Ls)^2	rapp. ex/rx	rapp. ey/ry
m	daN	m	m	m	m	m	m			
10.30	1326.80	2.81	1.14	-0.25	0.0	2.50	1.26	1.018	0.113	0.070
6.80	8588.24	2.17	1.03	-0.25	0.0	2.50	1.26	1.018	0.120	0.139
3.30	1.370e+04	2.36	1.16	-0.25	0.0	2.50	1.33	0.982	0.035	0.105
2.83	5751.43	2.66	1.36	-0.25	0.0	2.50	1.33	0.982	0.039	0.016
2.36	5391.97	2.70	1.29	-0.25	0.0	2.51	1.24	1.000	0.048	0.034
1.89	5032.50	2.75	1.21	-0.25	0.0	2.51	1.24	1.000	0.059	0.014
1.41	5032.50	2.75	1.21	-0.25	0.0	2.51	1.24	1.000	0.059	0.014
0.94	5032.50	2.75	1.21	-0.25	0.0	2.51	1.24	1.000	0.059	0.014
0.47	5032.50	2.75	1.21	-0.25	0.0	2.51	1.24	1.000	0.059	0.014
Risulta	5.489e+04									

Modo	Frequenza	Periodo	Acc. Spettrale	M efficace X x g	%	M efficace Y x g	%	M efficace Z x g	%	Energia	Energia x v
	Hz	sec	g	daN		daN		daN			
1	1.083	0.923	0.293	0.92	1.68e-03	3.303e+04	60.2	71.46	0.1	0.0	0.0
2	1.771	0.565	0.471	3.244e+04	59.1	4.77	8.68e-03	5.51	1.00e-02	0.0	0.0
3	3.080	0.325	0.471	96.50	0.2	163.07	0.3	11.99	2.18e-02	0.0	0.0
4	4.574	0.219	0.471	25.43	4.63e-02	1.025e+04	18.7	357.56	0.7	0.0	0.0
5	5.576	0.179	0.459	233.20	0.4	368.92	0.7	5.297e+04	96.5	0.0	0.0
6	5.700	0.175	0.455	1.038e+04	18.9	678.93	1.2	762.19	1.4	0.0	0.0
7	7.285	0.137	0.416	1.014e+04	18.5	1897.93	3.5	5.72	1.04e-02	0.0	0.0
8	8.506	0.118	0.396	680.77	1.2	7575.72	13.8	391.30	0.7	0.0	0.0
9	10.078	0.099	0.377	637.59	1.2	160.63	0.3	308.10	0.6	0.0	0.0
Risulta				5.463e+04		5.413e+04		5.488e+04			

Viale Duca Alessandro n. 11 – 43123 Parma
Cell. 335 1403156 – E mail ing.concari@gmail.com
Sito web: studioaire.it – P.IVA 02561480340

Modo	Frequenza	Periodo	Acc. Spettrale	M efficace X x g	%	M efficace Y x g	%	M efficace Z x g	%	Energia	Energia x v
In percentuale				99.52		98.60		99.98			

CDC	Tipo	Sigla Id	Note
8	Edk	CDC=Ed (dinamico SLD) alfa=0.0 (ecc. +)	
			categoria suolo: C
			fattore di sito S = 1.000
			ordinata spettro (tratto Tb-Tc) = 0.310 g
			angolo di ingresso:0.0
			eccentricità aggiuntiva: positiva
			periodo proprio T1: 0.567 sec.
			numero di modi considerati: 9
			combinaz. modale: CQC

Quota	M Sismica x g	Pos. GX	Pos. GY	E agg. X-X	E agg. Y-Y	Pos. KX	Pos. KY	(r/Ls)^2	rapp. ex/rx	rapp. ey/ry
m	daN	m	m	m	m	m	m			
10.30	1326.80	2.81	1.14	0.0	-0.14	2.50	1.26	1.018	0.113	0.070
6.80	8588.24	2.17	1.03	0.0	-0.14	2.50	1.26	1.018	0.120	0.139
3.30	1.370e+04	2.36	1.16	0.0	-0.14	2.50	1.33	0.982	0.035	0.105
2.83	5751.43	2.66	1.36	0.0	-0.14	2.50	1.33	0.982	0.039	0.016
2.36	5391.97	2.70	1.29	0.0	-0.14	2.51	1.24	1.000	0.048	0.034
1.89	5032.50	2.75	1.21	0.0	-0.14	2.51	1.24	1.000	0.059	0.014
1.41	5032.50	2.75	1.21	0.0	-0.14	2.51	1.24	1.000	0.059	0.014
0.94	5032.50	2.75	1.21	0.0	-0.14	2.51	1.24	1.000	0.059	0.014
0.47	5032.50	2.75	1.21	0.0	-0.14	2.51	1.24	1.000	0.059	0.014
Risulta	5.489e+04									

Modo	Frequenza	Periodo	Acc. Spettrale	M efficace X x g	%	M efficace Y x g	%	M efficace Z x g	%	Energia	Energia x v
	Hz	sec	g	daN		daN		daN			
1	1.085	0.922	0.173	0.46	8.36e-04	3.307e+04	60.2	72.01	0.1	0.0	0.0
2	1.764	0.567	0.281	3.237e+04	59.0	4.65	8.47e-03	5.62	1.02e-02	0.0	0.0
3	3.136	0.319	0.310	178.06	0.3	242.16	0.4	6.09	1.11e-02	0.0	0.0
4	4.685	0.213	0.310	161.02	0.3	1.114e+04	20.3	445.69	0.8	0.0	0.0
5	5.441	0.184	0.310	8065.02	14.7	211.77	0.4	2476.20	4.5	0.0	0.0
6	5.584	0.179	0.310	564.77	1.0	752.28	1.4	5.112e+04	93.1	0.0	0.0
7	7.323	0.137	0.271	1.296e+04	23.6	175.15	0.3	35.28	6.43e-02	0.0	0.0
8	8.650	0.116	0.248	46.63	8.50e-02	7358.92	13.4	609.18	1.1	0.0	0.0
9	10.520	0.095	0.226	238.96	0.4	1585.32	2.9	100.49	0.2	0.0	0.0
Risulta				5.459e+04		5.454e+04		5.487e+04			
In percentuale				99.44		99.35		99.96			

CDC	Tipo	Sigla Id	Note
9	Edk	CDC=Ed (dinamico SLD) alfa=0.0 (ecc. -)	
			categoria suolo: C
			fattore di sito S = 1.000
			ordinata spettro (tratto Tb-Tc) = 0.310 g
			angolo di ingresso:0.0
			eccentricità aggiuntiva: negativa
			periodo proprio T1: 0.564 sec.
			numero di modi considerati: 9
			combinaz. modale: CQC

Quota	M Sismica x g	Pos. GX	Pos. GY	E agg. X-X	E agg. Y-Y	Pos. KX	Pos. KY	(r/Ls)^2	rapp. ex/rx	rapp. ey/ry
m	daN	m	m	m	m	m	m			
10.30	1326.80	2.81	1.14	0.0	0.14	2.50	1.26	1.018	0.113	0.070
6.80	8588.24	2.17	1.03	0.0	0.14	2.50	1.26	1.018	0.120	0.139
3.30	1.370e+04	2.36	1.16	0.0	0.14	2.50	1.33	0.982	0.035	0.105
2.83	5751.43	2.66	1.36	0.0	0.14	2.50	1.33	0.982	0.039	0.016
2.36	5391.97	2.70	1.29	0.0	0.14	2.51	1.24	1.000	0.048	0.034
1.89	5032.50	2.75	1.21	0.0	0.14	2.51	1.24	1.000	0.059	0.014
1.41	5032.50	2.75	1.21	0.0	0.14	2.51	1.24	1.000	0.059	0.014
0.94	5032.50	2.75	1.21	0.0	0.14	2.51	1.24	1.000	0.059	0.014
0.47	5032.50	2.75	1.21	0.0	0.14	2.51	1.24	1.000	0.059	0.014
Risulta	5.489e+04									

Modo	Frequenza	Periodo	Acc. Spettrale	M efficace X x g	%	M efficace Y x g	%	M efficace Z x g	%	Energia	Energia x v
	Hz	sec	g	daN		daN		daN			
1	1.085	0.922	0.173	0.16	2.93e-04	3.307e+04	60.2	71.99	0.1	0.0	0.0
2	1.774	0.564	0.283	3.250e+04	59.2	1.70	3.10e-03	6.08	1.11e-02	0.0	0.0
3	3.225	0.310	0.310	87.51	0.2	375.44	0.7	5.40	9.84e-03	0.0	0.0
4	4.742	0.211	0.310	80.95	0.1	1.137e+04	20.7	496.54	0.9	0.0	0.0
5	5.574	0.179	0.310	40.19	7.32e-02	531.68	1.0	5.296e+04	96.5	0.0	0.0
6	5.902	0.169	0.307	9737.23	17.7	0.75	1.37e-03	470.77	0.9	0.0	0.0

Viale Duca Alessandro n. 11 – 43123 Parma
Cell. 335 1403156 – E mail ing.concari@gmail.com
Sito web: studioaire.it – P.IVA 02561480340

Modo	Frequenza	Periodo	Acc. Spettrale	M efficace X x g	%	M efficace Y x g	%	M efficace Z x g	%	Energia	Energia x v
7	6.626	0.151	0.287	9185.47	16.7	564.35	1.0	206.73	0.4	0.0	0.0
8	8.652	0.116	0.248	626.50	1.1	7959.17	14.5	287.84	0.5	0.0	0.0
9	9.402	0.106	0.238	2306.35	4.2	151.90	0.3	371.09	0.7	0.0	0.0
Risulta				5.457e+04		5.403e+04		5.487e+04			
In percentuale				99.41		98.42		99.97			

CDC	Tipo	Sigla Id	Note
10	Edk	CDC=Ed (dinamico SLD) alfa=90.00 (ecc. +)	
			categoria suolo: C
			fattore di sito S = 1.000
			ordinata spettro (tratto Tb-Tc) = 0.310 g
			angolo di ingresso:90.00
			eccentricità aggiuntiva: positiva
			periodo proprio T1: 0.922 sec.
			numero di modi considerati: 9
			combinaz. modale: CQC

Quota	M Sismica x g	Pos. GX	Pos. GY	E agg. X-X	E agg. Y-Y	Pos. KX	Pos. KY	(r/Ls)^2	rapp. ex/rx	rapp. ey/ry
m	daN	m	m	m	m	m	m			
10.30	1326.80	2.81	1.14	0.25	0.0	2.50	1.26	1.018	0.113	0.070
6.80	8588.24	2.17	1.03	0.25	0.0	2.50	1.26	1.018	0.120	0.139
3.30	1.370e+04	2.36	1.16	0.25	0.0	2.50	1.33	0.982	0.035	0.105
2.83	5751.43	2.66	1.36	0.25	0.0	2.50	1.33	0.982	0.039	0.016
2.36	5391.97	2.70	1.29	0.25	0.0	2.51	1.24	1.000	0.048	0.034
1.89	5032.50	2.75	1.21	0.25	0.0	2.51	1.24	1.000	0.059	0.014
1.41	5032.50	2.75	1.21	0.25	0.0	2.51	1.24	1.000	0.059	0.014
0.94	5032.50	2.75	1.21	0.25	0.0	2.51	1.24	1.000	0.059	0.014
0.47	5032.50	2.75	1.21	0.25	0.0	2.51	1.24	1.000	0.059	0.014
Risulta	5.489e+04									

Modo	Frequenza	Periodo	Acc. Spettrale	M efficace X x g	%	M efficace Y x g	%	M efficace Z x g	%	Energia	Energia x v
	Hz	sec	g	daN		daN		daN			
1	1.085	0.922	0.173	0.01	2.11e-05	3.314e+04	60.4	72.00	0.1	0.0	0.0
2	1.771	0.565	0.282	3.243e+04	59.1	1.62	2.96e-03	6.26	1.14e-02	0.0	0.0
3	3.126	0.320	0.310	112.85	0.2	304.57	0.6	0.11	2.03e-04	0.0	0.0
4	4.560	0.219	0.310	145.36	0.3	1.063e+04	19.4	307.40	0.6	0.0	0.0
5	5.399	0.185	0.310	4651.29	8.5	7.66	1.39e-02	4564.56	8.3	0.0	0.0
6	5.593	0.179	0.310	793.76	1.4	541.48	1.0	4.914e+04	89.5	0.0	0.0
7	6.836	0.146	0.282	1.579e+04	28.8	202.38	0.4	192.05	0.3	0.0	0.0
8	8.269	0.121	0.254	234.19	0.4	9059.44	16.5	169.44	0.3	0.0	0.0
9	9.926	0.101	0.232	116.71	0.2	38.39	6.99e-02	425.67	0.8	0.0	0.0
Risulta				5.427e+04		5.392e+04		5.488e+04			
In percentuale				98.87		98.23		99.98			

CDC	Tipo	Sigla Id	Note
11	Edk	CDC=Ed (dinamico SLD) alfa=90.00 (ecc. -)	
			categoria suolo: C
			fattore di sito S = 1.000
			ordinata spettro (tratto Tb-Tc) = 0.310 g
			angolo di ingresso:90.00
			eccentricità aggiuntiva: negativa
			periodo proprio T1: 0.923 sec.
			numero di modi considerati: 9
			combinaz. modale: CQC

Quota	M Sismica x g	Pos. GX	Pos. GY	E agg. X-X	E agg. Y-Y	Pos. KX	Pos. KY	(r/Ls)^2	rapp. ex/rx	rapp. ey/ry
m	daN	m	m	m	m	m	m			
10.30	1326.80	2.81	1.14	-0.25	0.0	2.50	1.26	1.018	0.113	0.070
6.80	8588.24	2.17	1.03	-0.25	0.0	2.50	1.26	1.018	0.120	0.139
3.30	1.370e+04	2.36	1.16	-0.25	0.0	2.50	1.33	0.982	0.035	0.105
2.83	5751.43	2.66	1.36	-0.25	0.0	2.50	1.33	0.982	0.039	0.016
2.36	5391.97	2.70	1.29	-0.25	0.0	2.51	1.24	1.000	0.048	0.034
1.89	5032.50	2.75	1.21	-0.25	0.0	2.51	1.24	1.000	0.059	0.014
1.41	5032.50	2.75	1.21	-0.25	0.0	2.51	1.24	1.000	0.059	0.014
0.94	5032.50	2.75	1.21	-0.25	0.0	2.51	1.24	1.000	0.059	0.014
0.47	5032.50	2.75	1.21	-0.25	0.0	2.51	1.24	1.000	0.059	0.014
Risulta	5.489e+04									

Modo	Frequenza	Periodo	Acc. Spettrale	M efficace X x g	%	M efficace Y x g	%	M efficace Z x g	%	Energia	Energia x v
	Hz	sec	g	daN		daN		daN			
1	1.083	0.923	0.173	0.92	1.68e-03	3.303e+04	60.2	71.46	0.1	0.0	0.0
2	1.771	0.565	0.282	3.244e+04	59.1	4.77	8.68e-03	5.51	1.00e-02	0.0	0.0

Viale Duca Alessandro n. 11 – 43123 Parma
Cell. 335 1403156 – E mail ing.concari@gmail.com
Sito web: studioaire.it – P.IVA 02561480340

Modo	Frequenza	Periodo	Acc. Spettrale	M efficace X x g	%	M efficace Y x g	%	M efficace Z x g	%	Energia	Energia x v
3	3.080	0.325	0.310	96.50	0.2	163.07	0.3	11.99	2.18e-02	0.0	0.0
4	4.574	0.219	0.310	25.43	4.63e-02	1.025e+04	18.7	357.56	0.7	0.0	0.0
5	5.576	0.179	0.310	233.20	0.4	368.92	0.7	5.297e+04	96.5	0.0	0.0
6	5.700	0.175	0.310	1.038e+04	18.9	678.93	1.2	762.19	1.4	0.0	0.0
7	7.285	0.137	0.272	1.014e+04	18.5	1897.93	3.5	5.72	1.04e-02	0.0	0.0
8	8.506	0.118	0.251	680.77	1.2	7575.72	13.8	391.30	0.7	0.0	0.0
9	10.078	0.099	0.231	637.59	1.2	160.63	0.3	308.10	0.6	0.0	0.0
Risulta				5.463e+04		5.413e+04		5.488e+04			
In percentuale				99.52		98.60		99.98			

MODELLO 2 VANO ASCENSORE

CDC	Tipo	Sigla Id	Note
4	Edk	CDC=Ed (dinamico SLU) alfa=0.0 (ecc. +)	
			categoria suolo: C
			fattore di sito S = 1.000
			ordinata spettro (tratto Tb-Tc) = 0.471 g
			angolo di ingresso:0.0
			eccentricità aggiuntiva: positiva
			periodo proprio T1: 0.208 sec.
			fattore q: 1.500
			amplificazione ND (non dissipativi): 1.500
			fattore per spost. mu d: 2.378
			classe di duttilità CD: B
			numero di modi considerati: 9
			combinaz. modale: CQC

Quota	M Sismica x g	Pos. GX	Pos. GY	E agg. X-X	E agg. Y-Y	Pos. KX	Pos. KY	(r/Ls)^2	rapp. ex/rx	rapp. ey/ry
cm	daN	cm	cm	cm	cm	cm	cm			
1030.00	1326.80	281.00	114.36	0.0	-13.50	250.00	126.00	1.018	0.113	0.070
680.00	8588.24	217.06	102.95	0.0	-13.50	250.00	126.00	1.018	0.120	0.139
330.00	676.41	336.10	119.80	0.0	-13.50	0.0	0.0	0.0	0.0	0.0
Risulta	1.059e+04									

Modo	Frequenza	Periodo	Acc. Spettrale	M efficace X x g	%	M efficace Y x g	%	M efficace Z x g	%	Energia	Energia x v
	Hz	sec	g	daN		daN		daN			
1	3.047	0.328	0.471	41.69	0.4	9300.12	87.8	4.52e-03	4.27e-05	0.0	0.0
2	3.624	0.276	0.471	1858.43	17.5	406.48	3.8	4.95e-03	4.68e-05	0.0	0.0
3	4.801	0.208	0.471	7716.72	72.9	7.23	6.82e-02	3.24e-03	3.06e-05	0.0	0.0
4	6.595	0.152	0.431	2.52	2.38e-02	73.31	0.7	0.08	7.53e-04	0.0	0.0
5	9.802	0.102	0.380	2.74	2.59e-02	98.34	0.9	370.53	3.5	0.0	0.0
6	9.940	0.101	0.379	0.80	7.57e-03	18.25	0.2	1703.03	16.1	0.0	0.0
7	10.401	0.096	0.374	28.20	0.3	11.09	0.1	0.04	3.98e-04	0.0	0.0
8	13.469	0.074	0.352	262.56	2.5	3.65e-03	3.44e-05	7.66e-03	7.23e-05	0.0	0.0
9	73.575	0.014	0.290	2.56e-05	0.0	4.16e-03	3.92e-05	7534.91	71.1	0.0	0.0
Risulta				9913.67		9914.83		9608.61			
In percentuale				93.60		93.61		90.72			

CDC	Tipo	Sigla Id	Note
5	Edk	CDC=Ed (dinamico SLU) alfa=0.0 (ecc. -)	
			categoria suolo: C
			fattore di sito S = 1.000
			ordinata spettro (tratto Tb-Tc) = 0.471 g
			angolo di ingresso:0.0
			eccentricità aggiuntiva: negativa
			periodo proprio T1: 0.216 sec.
			fattore q: 1.500
			amplificazione ND (non dissipativi): 1.500
			fattore per spost. mu d: 2.328
			classe di duttilità CD: B
			numero di modi considerati: 9
			combinaz. modale: CQC

Quota	M Sismica x g	Pos. GX	Pos. GY	E agg. X-X	E agg. Y-Y	Pos. KX	Pos. KY	(r/Ls)^2	rapp. ex/rx	rapp. ey/ry
cm	daN	cm	cm	cm	cm	cm	cm			
1030.00	1326.80	281.00	114.36	0.0	13.50	250.00	126.00	1.018	0.113	0.070
680.00	8588.24	217.06	102.95	0.0	13.50	250.00	126.00	1.018	0.120	0.139
330.00	676.41	336.10	119.80	0.0	13.50	0.0	0.0	0.0	0.0	0.0
Risulta	1.059e+04									

Modo	Frequenza	Periodo	Acc. Spettrale	M efficace X x g	%	M efficace Y x g	%	M efficace Z x g	%	Energia	Energia x v
	Hz	sec	g	daN		daN		daN			

Viale Duca Alessandro n. 11 – 43123 Parma
Cell. 335 1403156 – E mail ing.concari@gmail.com
Sito web: studioaire.it – P.IVA 02561480340

Modo	Frequenza	Periodo	Acc. Spettrale	M efficace X x g	%	M efficace Y x g	%	M efficace Z x g	%	Energia	Energia x v
1	3.048	0.328	0.471	2.81	2.66e-02	9352.41	88.3	4.58e-03	4.32e-05	0.0	0.0
2	3.705	0.270	0.471	328.06	3.1	358.10	3.4	5.95e-03	5.62e-05	0.0	0.0
3	4.626	0.216	0.471	9297.43	87.8	3.44	3.25e-02	9.74e-04	9.19e-06	0.0	0.0
4	6.595	0.152	0.431	1.32	1.24e-02	73.40	0.7	0.08	7.47e-04	0.0	0.0
5	9.810	0.102	0.380	0.96	9.06e-03	98.69	0.9	422.86	4.0	0.0	0.0
6	9.942	0.101	0.378	0.28	2.66e-03	22.09	0.2	1650.71	15.6	0.0	0.0
7	10.504	0.095	0.373	3.97	3.74e-02	6.68	6.31e-02	0.05	4.51e-04	0.0	0.0
8	13.426	0.074	0.352	279.63	2.6	5.00e-03	4.72e-05	1.30e-06	0.0	0.0	0.0
9	73.577	0.014	0.290	1.46e-04	1.38e-06	4.20e-03	3.97e-05	7535.29	71.1	0.0	0.0
Risulta				9914.45		9914.82		9608.99			
In percentuale				93.61		93.61		90.72			

CDC	Tipo	Sigla Id	Note
6	Edk	CDC=Ed (dinamico SLU) alfa=90.00 (ecc. +)	
			categoria suolo: C
			fattore di sito S = 1.000
			ordinata spettro (tratto Tb-Tc) = 0.471 g
			angolo di ingresso:90.00
			eccentricità aggiuntiva: positiva
			periodo proprio T1: 0.325 sec.
			fattore q: 1.500
			amplificazione ND (non dissipativi): 1.500
			fattore per spost. mu d: 1.883
			classe di duttilità CD: B
			numero di modi considerati: 9
			combinaz. modale: CQC

Quota	M Sismica x g	Pos. GX	Pos. GY	E agg. X-X	E agg. Y-Y	Pos. KX	Pos. KY	(r/Ls)^2	rapp. ex/rx	rapp. ey/ry
cm	daN	cm	cm	cm	cm	cm	cm			
1030.00	1326.80	281.00	114.36	25.00	0.0	250.00	126.00	1.018	0.113	0.070
680.00	8588.24	217.06	102.95	25.00	0.0	250.00	126.00	1.018	0.120	0.139
330.00	676.41	336.10	119.80	25.00	0.0	0.0	0.0	0.0	0.0	0.0
Risulta	1.059e+04									

Modo	Frequenza	Periodo	Acc. Spettrale	M efficace X x g	%	M efficace Y x g	%	M efficace Z x g	%	Energia	Energia x v
	Hz	sec	g	daN		daN		daN			
1	3.077	0.325	0.471	1.07	1.01e-02	9699.74	91.6	6.64e-03	6.27e-05	0.0	0.0
2	3.641	0.275	0.471	1006.25	9.5	4.88	4.61e-02	2.55e-03	2.40e-05	0.0	0.0
3	4.693	0.213	0.471	8617.56	81.4	0.16	1.49e-03	1.75e-03	1.65e-05	0.0	0.0
4	6.540	0.153	0.432	0.08	7.13e-04	80.50	0.8	0.07	6.79e-04	0.0	0.0
5	9.310	0.107	0.385	3.97	3.75e-02	99.93	0.9	12.55	0.1	0.0	0.0
6	9.918	0.101	0.379	0.07	6.39e-04	0.15	1.39e-03	2060.46	19.5	0.0	0.0
7	10.936	0.091	0.369	12.10	0.1	29.37	0.3	0.60	5.70e-03	0.0	0.0
8	13.428	0.074	0.352	273.03	2.6	0.15	1.46e-03	0.0	0.0	0.0	0.0
9	73.565	0.014	0.290	1.71e-04	1.61e-06	4.11e-03	3.88e-05	7533.14	71.1	0.0	0.0
Risulta				9914.12		9914.88		9606.83			
In percentuale				93.60		93.61		90.70			

CDC	Tipo	Sigla Id	Note
7	Edk	CDC=Ed (dinamico SLU) alfa=90.00 (ecc. -)	
			categoria suolo: C
			fattore di sito S = 1.000
			ordinata spettro (tratto Tb-Tc) = 0.471 g
			angolo di ingresso:90.00
			eccentricità aggiuntiva: negativa
			periodo proprio T1: 0.337 sec.
			fattore q: 1.500
			amplificazione ND (non dissipativi): 1.500
			fattore per spost. mu d: 1.852
			classe di duttilità CD: B
			numero di modi considerati: 9
			combinaz. modale: CQC

Quota	M Sismica x g	Pos. GX	Pos. GY	E agg. X-X	E agg. Y-Y	Pos. KX	Pos. KY	(r/Ls)^2	rapp. ex/rx	rapp. ey/ry
cm	daN	cm	cm	cm	cm	cm	cm			
1030.00	1326.80	281.00	114.36	-25.00	0.0	250.00	126.00	1.018	0.113	0.070
680.00	8588.24	217.06	102.95	-25.00	0.0	250.00	126.00	1.018	0.120	0.139
330.00	676.41	336.10	119.80	-25.00	0.0	0.0	0.0	0.0	0.0	0.0
Risulta	1.059e+04									

Modo	Frequenza	Periodo	Acc. Spettrale	M efficace X x g	%	M efficace Y x g	%	M efficace Z x g	%	Energia	Energia x v
	Hz	sec	g	daN		daN		daN			

Viale Duca Alessandro n. 11 – 43123 Parma
Cell. 335 1403156 – E mail ing.concari@gmail.com
Sito web: studioaire.it – P.IVA 02561480340

Modo	Frequenza	Periodo	Acc. Spettrale	M efficace X x g	%	M efficace Y x g	%	M efficace Z x g	%	Energia	Energia x v
1	2.968	0.337	0.471	45.58	0.4	8705.66	82.2	3.00e-03	2.83e-05	0.0	0.0
2	3.791	0.264	0.471	1202.80	11.4	986.39	9.3	7.79e-03	7.35e-05	0.0	0.0
3	4.705	0.213	0.471	8371.82	79.0	23.53	0.2	2.54e-03	2.40e-05	0.0	0.0
4	6.691	0.149	0.428	5.45	5.14e-02	71.86	0.7	0.09	8.95e-04	0.0	0.0
5	9.893	0.101	0.379	4.57e-04	4.31e-06	23.64	0.2	1730.48	16.3	0.0	0.0
6	10.024	0.100	0.378	2.70e-04	2.55e-06	102.65	1.0	342.89	3.2	0.0	0.0
7	13.011	0.077	0.354	266.05	2.5	0.27	2.59e-03	0.07	6.29e-04	0.0	0.0
8	16.284	0.061	0.339	21.29	0.2	0.45	4.21e-03	0.31	2.95e-03	0.0	0.0
9	73.621	0.014	0.290	2.94e-04	2.78e-06	5.56e-03	5.25e-05	7542.60	71.2	0.0	0.0
Risulta				9912.99		9914.46		9616.46			
In percentuale				93.59		93.61		90.79			

CDC	Tipo	Sigla Id	Note
8	Edk	CDC=Ed (dinamico SLD) alfa=0.0 (ecc. +)	
			categoria suolo: C
			fattore di sito S = 1.000
			ordinata spettro (tratto Tb-Tc) = 0.310 g
			angolo di ingresso:0.0
			eccentricità aggiuntiva: positiva
			periodo proprio T1: 0.208 sec.
			numero di modi considerati: 9
			combinaz. modale: CQC

Quota	M Sismica x g	Pos. GX	Pos. GY	E agg. X-X	E agg. Y-Y	Pos. KX	Pos. KY	(r/Ls)^2	rapp. ex/rx	rapp. ey/ry
cm	daN	cm	cm	cm	cm	cm	cm			
1030.00	1326.80	281.00	114.36	0.0	-13.50	250.00	126.00	1.018	0.113	0.070
680.00	8588.24	217.06	102.95	0.0	-13.50	250.00	126.00	1.018	0.120	0.139
330.00	676.41	336.10	119.80	0.0	-13.50	0.0	0.0	0.0	0.0	0.0
Risulta	1.059e+04									

Modo	Frequenza	Periodo	Acc. Spettrale	M efficace X x g	%	M efficace Y x g	%	M efficace Z x g	%	Energia	Energia x v
	Hz	sec	g	daN		daN		daN			
1	3.047	0.328	0.310	41.69	0.4	9300.12	87.8	4.52e-03	4.27e-05	0.0	0.0
2	3.624	0.276	0.310	1858.43	17.5	406.48	3.8	4.95e-03	4.68e-05	0.0	0.0
3	4.801	0.208	0.310	7716.72	72.9	7.23	6.82e-02	3.24e-03	3.06e-05	0.0	0.0
4	6.595	0.152	0.287	2.52	2.38e-02	73.31	0.7	0.08	7.53e-04	0.0	0.0
5	9.802	0.102	0.234	2.74	2.59e-02	98.34	0.9	370.53	3.5	0.0	0.0
6	9.940	0.101	0.232	0.80	7.57e-03	18.25	0.2	1703.03	16.1	0.0	0.0
7	10.401	0.096	0.227	28.20	0.3	11.09	0.1	0.04	3.98e-04	0.0	0.0
8	13.469	0.074	0.204	262.56	2.5	3.65e-03	3.44e-05	7.66e-03	7.23e-05	0.0	0.0
9	73.575	0.014	0.138	2.56e-05	0.0	4.16e-03	3.92e-05	7534.91	71.1	0.0	0.0
Risulta				9913.67		9914.83		9608.61			
In percentuale				93.60		93.61		90.72			

CDC	Tipo	Sigla Id	Note
9	Edk	CDC=Ed (dinamico SLD) alfa=0.0 (ecc. -)	
			categoria suolo: C
			fattore di sito S = 1.000
			ordinata spettro (tratto Tb-Tc) = 0.310 g
			angolo di ingresso:0.0
			eccentricità aggiuntiva: negativa
			periodo proprio T1: 0.216 sec.
			numero di modi considerati: 9
			combinaz. modale: CQC

Quota	M Sismica x g	Pos. GX	Pos. GY	E agg. X-X	E agg. Y-Y	Pos. KX	Pos. KY	(r/Ls)^2	rapp. ex/rx	rapp. ey/ry
cm	daN	cm	cm	cm	cm	cm	cm			
1030.00	1326.80	281.00	114.36	0.0	13.50	250.00	126.00	1.018	0.113	0.070
680.00	8588.24	217.06	102.95	0.0	13.50	250.00	126.00	1.018	0.120	0.139
330.00	676.41	336.10	119.80	0.0	13.50	0.0	0.0	0.0	0.0	0.0
Risulta	1.059e+04									

Modo	Frequenza	Periodo	Acc. Spettrale	M efficace X x g	%	M efficace Y x g	%	M efficace Z x g	%	Energia	Energia x v
	Hz	sec	g	daN		daN		daN			
1	3.048	0.328	0.310	2.81	2.66e-02	9352.41	88.3	4.58e-03	4.32e-05	0.0	0.0
2	3.705	0.270	0.310	328.06	3.1	358.10	3.4	5.95e-03	5.62e-05	0.0	0.0
3	4.626	0.216	0.310	9297.43	87.8	3.44	3.25e-02	9.74e-04	9.19e-06	0.0	0.0
4	6.595	0.152	0.288	1.32	1.24e-02	73.40	0.7	0.08	7.47e-04	0.0	0.0
5	9.810	0.102	0.234	0.96	9.06e-03	98.69	0.9	422.86	4.0	0.0	0.0
6	9.942	0.101	0.232	0.28	2.66e-03	22.09	0.2	1650.71	15.6	0.0	0.0
7	10.504	0.095	0.226	3.97	3.74e-02	6.68	6.31e-02	0.05	4.51e-04	0.0	0.0
8	13.426	0.074	0.204	279.63	2.6	5.00e-03	4.72e-05	1.30e-06	0.0	0.0	0.0

Viale Duca Alessandro n. 11 – 43123 Parma
Cell. 335 1403156 – E mail ing.concari@gmail.com
Sito web: studioaire.it – P.IVA 02561480340

Modo	Frequenza	Periodo	Acc. Spettrale	M efficace X x g	%	M efficace Y x g	%	M efficace Z x g	%	Energia	Energia x v
9	73.577	0.014	0.138	1.46e-04	1.38e-06	4.20e-03	3.97e-05	7535.29	71.1	0.0	0.0
Risulta				9914.45		9914.82		9608.99			
In percentuale				93.61		93.61		90.72			

CDC	Tipo	Sigla Id	Note
10	Edk	CDC=Ed (dinamico SLD) alfa=90.00 (ecc. +)	
			categoria suolo: C
			fattore di sito S = 1.000
			ordinata spettro (tratto Tb-Tc) = 0.310 g
			angolo di ingresso:90.00
			eccentricità aggiuntiva: positiva
			periodo proprio T1: 0.325 sec.
			numero di modi considerati: 9
			combinaz. modale: CQC

Quota	M Sismica x g	Pos. GX	Pos. GY	E agg. X-X	E agg. Y-Y	Pos. KX	Pos. KY	(r/Ls)^2	rapp. ex/rx	rapp. ey/ry
cm	daN	cm	cm	cm	cm	cm	cm			
1030.00	1326.80	281.00	114.36	25.00	0.0	250.00	126.00	1.018	0.113	0.070
680.00	8588.24	217.06	102.95	25.00	0.0	250.00	126.00	1.018	0.120	0.139
330.00	676.41	336.10	119.80	25.00	0.0	0.0	0.0	0.0	0.0	0.0
Risulta	1.059e+04									

Modo	Frequenza	Periodo	Acc. Spettrale	M efficace X x g	%	M efficace Y x g	%	M efficace Z x g	%	Energia	Energia x v
	Hz	sec	g	daN		daN		daN			
1	3.077	0.325	0.310	1.07	1.01e-02	9699.74	91.6	6.64e-03	6.27e-05	0.0	0.0
2	3.641	0.275	0.310	1006.25	9.5	4.88	4.61e-02	2.55e-03	2.40e-05	0.0	0.0
3	4.693	0.213	0.310	8617.56	81.4	0.16	1.49e-03	1.75e-03	1.65e-05	0.0	0.0
4	6.540	0.153	0.289	0.08	7.13e-04	80.50	0.8	0.07	6.79e-04	0.0	0.0
5	9.310	0.107	0.240	3.97	3.75e-02	99.93	0.9	12.55	0.1	0.0	0.0
6	9.918	0.101	0.232	0.07	6.39e-04	0.15	1.39e-03	2060.46	19.5	0.0	0.0
7	10.936	0.091	0.222	12.10	0.1	29.37	0.3	0.60	5.70e-03	0.0	0.0
8	13.428	0.074	0.204	273.03	2.6	0.15	1.46e-03	0.0	0.0	0.0	0.0
9	73.565	0.014	0.138	1.71e-04	1.61e-06	4.11e-03	3.88e-05	7533.14	71.1	0.0	0.0
Risulta				9914.12		9914.88		9606.83			
In percentuale				93.60		93.61		90.70			

CDC	Tipo	Sigla Id	Note
11	Edk	CDC=Ed (dinamico SLD) alfa=90.00 (ecc. -)	
			categoria suolo: C
			fattore di sito S = 1.000
			ordinata spettro (tratto Tb-Tc) = 0.310 g
			angolo di ingresso:90.00
			eccentricità aggiuntiva: negativa
			periodo proprio T1: 0.337 sec.
			numero di modi considerati: 9
			combinaz. modale: CQC

Quota	M Sismica x g	Pos. GX	Pos. GY	E agg. X-X	E agg. Y-Y	Pos. KX	Pos. KY	(r/Ls)^2	rapp. ex/rx	rapp. ey/ry
cm	daN	cm	cm	cm	cm	cm	cm			
1030.00	1326.80	281.00	114.36	-25.00	0.0	250.00	126.00	1.018	0.113	0.070
680.00	8588.24	217.06	102.95	-25.00	0.0	250.00	126.00	1.018	0.120	0.139
330.00	676.41	336.10	119.80	-25.00	0.0	0.0	0.0	0.0	0.0	0.0
Risulta	1.059e+04									

Modo	Frequenza	Periodo	Acc. Spettrale	M efficace X x g	%	M efficace Y x g	%	M efficace Z x g	%	Energia	Energia x v
	Hz	sec	g	daN		daN		daN			
1	2.968	0.337	0.310	45.58	0.4	8705.66	82.2	3.00e-03	2.83e-05	0.0	0.0
2	3.791	0.264	0.310	1202.80	11.4	986.39	9.3	7.79e-03	7.35e-05	0.0	0.0
3	4.705	0.213	0.310	8371.82	79.0	23.53	0.2	2.54e-03	2.40e-05	0.0	0.0
4	6.691	0.149	0.285	5.45	5.14e-02	71.86	0.7	0.09	8.95e-04	0.0	0.0
5	9.893	0.101	0.233	4.57e-04	4.31e-06	23.64	0.2	1730.48	16.3	0.0	0.0
6	10.024	0.100	0.231	2.70e-04	2.55e-06	102.65	1.0	342.89	3.2	0.0	0.0
7	13.011	0.077	0.206	266.05	2.5	0.27	2.59e-03	0.07	6.29e-04	0.0	0.0
8	16.284	0.061	0.190	21.29	0.2	0.45	4.21e-03	0.31	2.95e-03	0.0	0.0
9	73.621	0.014	0.138	2.94e-04	2.78e-06	5.56e-03	5.25e-05	7542.60	71.2	0.0	0.0
Risulta				9912.99		9914.46		9616.46			
In percentuale				93.59		93.61		90.79			

Viale Duca Alessandro n. 11 – 43123 Parma
Cell. 335 1403156 – E mail ing.concari@gmail.com
Sito web: studioaire.it – P.IVA 02561480340

Cmb	Pilas.	1000 etaT/h	etaT	inter. h	Pilas.	1000 etaT/h	etaT	inter. h	Pilas.	1000 etaT/h	etaT	inter. h
			cm	cm			cm	cm			cm	cm
85	1	0.42	0.15	350.0	2	0.84	0.29	350.0	3	0.77	0.27	350.0
	4	0.37	0.13	350.0	12	0.71	0.25	350.0	13	0.80	0.28	350.0
	14	1.19	0.42	350.0	15	1.79	0.63	350.0	16	1.78	0.62	350.0
	17	1.11	0.39	350.0	24	0.45	0.16	350.0	25	0.37	0.13	350.0
86	1	0.36	0.13	350.0	2	0.49	0.17	350.0	3	0.43	0.15	350.0
	4	0.29	0.10	350.0	12	1.42	0.50	350.0	13	1.46	0.51	350.0
	14	0.86	0.30	350.0	15	0.84	0.29	350.0	16	0.78	0.27	350.0
	17	0.74	0.26	350.0	24	0.54	0.19	350.0	25	0.53	0.19	350.0
87	1	0.56	0.20	350.0	2	0.50	0.18	350.0	3	0.59	0.21	350.0
	4	0.59	0.21	350.0	12	1.55	0.54	350.0	13	1.68	0.59	350.0
	14	1.24	0.43	350.0	15	0.92	0.32	350.0	16	0.91	0.32	350.0
	17	1.03	0.36	350.0	24	0.63	0.22	350.0	25	0.69	0.24	350.0
88	1	0.60	0.21	350.0	2	0.75	0.26	350.0	3	0.78	0.27	350.0
	4	0.63	0.22	350.0	12	0.90	0.31	350.0	13	1.14	0.40	350.0
	14	1.35	0.47	350.0	15	1.62	0.57	350.0	16	1.63	0.57	350.0
	17	1.17	0.41	350.0	24	0.56	0.20	350.0	25	0.56	0.20	350.0
89	1	0.45	0.16	350.0	2	0.71	0.25	350.0	3	0.68	0.24	350.0
	4	0.33	0.12	350.0	12	0.58	0.20	350.0	13	0.95	0.33	350.0
	14	1.25	0.44	350.0	15	1.51	0.53	350.0	16	1.53	0.54	350.0
	17	1.03	0.36	350.0	24	0.33	0.11	350.0	25	0.40	0.14	350.0
90	1	0.32	0.11	350.0	2	0.63	0.22	350.0	3	0.52	0.18	350.0
	4	0.32	0.11	350.0	12	1.67	0.59	350.0	13	1.57	0.55	350.0
	14	0.73	0.26	350.0	15	1.11	0.39	350.0	16	0.98	0.34	350.0
	17	0.77	0.27	350.0	24	0.68	0.24	350.0	25	0.58	0.20	350.0
91	1	0.52	0.18	350.0	2	0.63	0.22	350.0	3	0.65	0.23	350.0
	4	0.62	0.22	350.0	12	1.80	0.63	350.0	13	1.76	0.62	350.0
	14	1.10	0.39	350.0	15	1.14	0.40	350.0	16	1.03	0.36	350.0
	17	1.07	0.37	350.0	24	0.77	0.27	350.0	25	0.71	0.25	350.0
92	1	0.63	0.22	350.0	2	0.61	0.21	350.0	3	0.69	0.24	350.0
	4	0.59	0.21	350.0	12	0.75	0.26	350.0	13	1.28	0.45	350.0
	14	1.43	0.50	350.0	15	1.33	0.47	350.0	16	1.40	0.49	350.0
	17	1.09	0.38	350.0	24	0.45	0.16	350.0	25	0.60	0.21	350.0
93	1	0.44	0.15	350.0	2	0.66	0.23	350.0	3	0.58	0.20	350.0
	4	0.39	0.14	350.0	12	0.83	0.29	350.0	13	0.91	0.32	350.0
	14	1.13	0.40	350.0	15	1.37	0.48	350.0	16	1.39	0.49	350.0
	17	1.09	0.38	350.0	24	0.47	0.17	350.0	25	0.40	0.14	350.0
94	1	0.41	0.14	350.0	2	0.41	0.14	350.0	3	0.34	0.12	350.0
	4	0.35	0.12	350.0	12	1.16	0.41	350.0	13	1.19	0.42	350.0
	14	0.95	0.33	350.0	15	0.78	0.27	350.0	16	0.77	0.27	350.0
	17	0.90	0.31	350.0	24	0.47	0.17	350.0	25	0.47	0.16	350.0
95	1	0.61	0.21	350.0	2	0.54	0.19	350.0	3	0.65	0.23	350.0
	4	0.65	0.23	350.0	12	1.31	0.46	350.0	13	1.46	0.51	350.0
	14	1.32	0.46	350.0	15	1.03	0.36	350.0	16	1.09	0.38	350.0
	17	1.19	0.42	350.0	24	0.58	0.20	350.0	25	0.65	0.23	350.0
96	1	0.62	0.22	350.0	2	0.64	0.22	350.0	3	0.70	0.24	350.0
	4	0.67	0.24	350.0	12	1.00	0.35	350.0	13	1.22	0.43	350.0
	14	1.32	0.46	350.0	15	1.27	0.44	350.0	16	1.34	0.47	350.0
	17	1.20	0.42	350.0	24	0.59	0.21	350.0	25	0.60	0.21	350.0
97	1	0.47	0.16	350.0	2	0.52	0.18	350.0	3	0.49	0.17	350.0
	4	0.35	0.12	350.0	12	0.81	0.28	350.0	13	1.11	0.39	350.0
	14	1.20	0.42	350.0	15	1.08	0.38	350.0	16	1.16	0.41	350.0
	17	1.02	0.36	350.0	24	0.39	0.14	350.0	25	0.46	0.16	350.0
98	1	0.37	0.13	350.0	2	0.53	0.19	350.0	3	0.40	0.14	350.0
	4	0.38	0.13	350.0	12	1.41	0.49	350.0	13	1.27	0.44	350.0
	14	0.82	0.29	350.0	15	0.95	0.33	350.0	16	0.85	0.30	350.0
	17	0.93	0.33	350.0	24	0.61	0.21	350.0	25	0.49	0.17	350.0
99	1	0.57	0.20	350.0	2	0.64	0.22	350.0	3	0.68	0.24	350.0
	4	0.69	0.24	350.0	12	1.56	0.55	350.0	13	1.50	0.53	350.0
	14	1.19	0.42	350.0	15	1.13	0.40	350.0	16	1.09	0.38	350.0
	17	1.23	0.43	350.0	24	0.72	0.25	350.0	25	0.65	0.23	350.0
100	1	0.66	0.23	350.0	2	0.51	0.18	350.0	3	0.64	0.22	350.0
	4	0.64	0.22	350.0	12	0.94	0.33	350.0	13	1.40	0.49	350.0
	14	1.41	0.49	350.0	15	0.99	0.35	350.0	16	1.15	0.40	350.0
	17	1.12	0.39	350.0	24	0.50	0.17	350.0	25	0.65	0.23	350.0
101	1	0.54	0.19	350.0	2	0.90	0.32	350.0	3	0.88	0.31	350.0
	4	0.54	0.19	350.0	12	1.86	0.65	350.0	13	1.86	0.65	350.0
	14	2.18	0.76	350.0	15	2.46	0.86	350.0	16	2.46	0.86	350.0
	17	2.18	0.76	350.0	24	0.48	0.17	350.0	25	0.45	0.16	350.0
102	1	0.49	0.17	350.0	2	0.42	0.15	350.0	3	0.42	0.15	350.0
	4	0.49	0.17	350.0	12	2.22	0.78	350.0	13	2.21	0.77	350.0
	14	1.90	0.66	350.0	15	1.63	0.57	350.0	16	1.62	0.57	350.0
	17	1.90	0.66	350.0	24	0.59	0.21	350.0	25	0.59	0.21	350.0
103	1	0.55	0.19	350.0	2	0.64	0.23	350.0	3	0.69	0.24	350.0
	4	0.57	0.20	350.0	12	2.26	0.79	350.0	13	2.27	0.80	350.0
	14	2.10	0.74	350.0	15	1.96	0.68	350.0	16	1.95	0.68	350.0
	17	2.09	0.73	350.0	24	0.60	0.21	350.0	25	0.64	0.22	350.0
104	1	0.58	0.20	350.0	2	0.73	0.26	350.0	3	0.73	0.26	350.0
	4	0.61	0.21	350.0	12	1.86	0.65	350.0	13	1.90	0.66	350.0
	14	2.07	0.72	350.0	15	2.17	0.76	350.0	16	2.19	0.77	350.0
	17	2.05	0.72	350.0	24	0.54	0.19	350.0	25	0.50	0.18	350.0
105	1	0.53	0.19	350.0	2	0.83	0.29	350.0	3	0.81	0.28	350.0
	4	0.53	0.19	350.0	12	1.97	0.69	350.0	13	1.97	0.69	350.0
	14	2.14	0.75	350.0	15	2.31	0.81	350.0	16	2.31	0.81	350.0
	17	2.14	0.75	350.0	24	0.53	0.19	350.0	25	0.49	0.17	350.0
106	1	0.50	0.18	350.0	2	0.49	0.17	350.0	3	0.49	0.17	350.0
	4	0.50	0.18	350.0	12	2.11	0.74	350.0	13	2.10	0.74	350.0
	14	1.94	0.68	350.0	15	1.78	0.62	350.0	16	1.78	0.62	350.0
	17	1.94	0.68	350.0	24	0.55	0.19	350.0	25	0.55	0.19	350.0
107	1	0.57	0.20	350.0	2	0.72	0.25	350.0	3	0.76	0.27	350.0
	4	0.58	0.20	350.0	12	2.16	0.76	350.0	13	2.17	0.76	350.0
	14	2.14	0.75	350.0	15	2.11	0.74	350.0	16	2.11	0.74	350.0
	17	2.13	0.74	350.0	24	0.56	0.19	350.0	25	0.60	0.21	350.0

Viale Duca Alessandro n. 11 – 43123 Parma
Cell. 335 1403156 – E mail ing.concari@gmail.com
Sito web: studioaire.it – P.IVA 02561480340

Cmb	Pilas.	1000 etaT/h	etaT	inter. h	Pilas.	1000 etaT/h	etaT	inter. h	Pilas.	1000 etaT/h	etaT	inter. h
108	1	0.57	0.20	350.0	2	0.67	0.23	350.0	3	0.67	0.24	350.0
	4	0.61	0.21	350.0	12	1.97	0.69	350.0	13	2.00	0.70	350.0
	14	2.04	0.71	350.0	15	2.03	0.71	350.0	16	2.05	0.72	350.0
	17	2.02	0.71	350.0	24	0.58	0.20	350.0	25	0.55	0.19	350.0
109	1	0.53	0.18	350.0	2	0.62	0.22	350.0	3	0.61	0.21	350.0
	4	0.51	0.18	350.0	12	2.54	0.89	350.0	13	2.56	0.90	350.0
	14	2.09	0.73	350.0	15	1.71	0.60	350.0	16	1.66	0.58	350.0
	17	2.02	0.71	350.0	24	0.74	0.26	350.0	25	0.74	0.26	350.0
110	1	0.45	0.16	350.0	2	0.35	0.12	350.0	3	0.15	0.05	350.0
	4	0.45	0.16	350.0	12	2.95	1.03	350.0	13	2.87	1.01	350.0
	14	1.77	0.62	350.0	15	1.10	0.38	350.0	16	0.88	0.31	350.0
	17	1.77	0.62	350.0	24	0.93	0.33	350.0	25	0.88	0.31	350.0
111	1	0.47	0.16	350.0	2	0.57	0.20	350.0	3	0.52	0.18	350.0
	4	0.60	0.21	350.0	12	3.02	1.06	350.0	13	2.88	1.01	350.0
	14	1.90	0.67	350.0	15	1.45	0.51	350.0	16	1.25	0.44	350.0
	17	1.98	0.69	350.0	24	0.98	0.34	350.0	25	0.88	0.31	350.0
112	1	0.61	0.21	350.0	2	0.37	0.13	350.0	3	0.42	0.15	350.0
	4	0.52	0.18	350.0	12	2.49	0.87	350.0	13	2.63	0.92	350.0
	14	2.06	0.72	350.0	15	1.38	0.48	350.0	16	1.37	0.48	350.0
	17	1.86	0.65	350.0	24	0.72	0.25	350.0	25	0.81	0.29	350.0
113	1	0.52	0.18	350.0	2	0.54	0.19	350.0	3	0.53	0.19	350.0
	4	0.50	0.17	350.0	12	2.64	0.93	350.0	13	2.67	0.93	350.0
	14	2.06	0.72	350.0	15	1.56	0.55	350.0	16	1.51	0.53	350.0
	17	1.98	0.69	350.0	24	0.78	0.27	350.0	25	0.79	0.28	350.0
114	1	0.46	0.16	350.0	2	0.39	0.14	350.0	3	0.22	0.08	350.0
	4	0.46	0.16	350.0	12	2.84	1.00	350.0	13	2.76	0.97	350.0
	14	1.80	0.63	350.0	15	1.22	0.43	350.0	16	1.03	0.36	350.0
	17	1.81	0.63	350.0	24	0.89	0.31	350.0	25	0.83	0.29	350.0
115	1	0.48	0.17	350.0	2	0.62	0.22	350.0	3	0.58	0.20	350.0
	4	0.62	0.22	350.0	12	2.92	1.02	350.0	13	2.77	0.97	350.0
	14	1.94	0.68	350.0	15	1.58	0.55	350.0	16	1.40	0.49	350.0
	17	2.02	0.71	350.0	24	0.95	0.33	350.0	25	0.83	0.29	350.0
116	1	0.61	0.21	350.0	2	0.30	0.10	350.0	3	0.36	0.13	350.0
	4	0.51	0.18	350.0	12	2.60	0.91	350.0	13	2.74	0.96	350.0
	14	2.03	0.71	350.0	15	1.23	0.43	350.0	16	1.23	0.43	350.0
	17	1.83	0.64	350.0	24	0.77	0.27	350.0	25	0.86	0.30	350.0
Cmb		**1000 etaT/h**										
		3.02										

MODELLO LOCALE TECNICO

CDC	Tipo	Sigla Id	Note
4	Edk	CDC=Ed (dinamico SLU) alfa=0.0 (ecc. +)	
			categoria suolo: C
			fattore di sito S = 1.000
			ordinata spettro (tratto Tb-Tc) = 0.706 g
			angolo di ingresso:0.0
			eccentricità aggiuntiva: positiva
			periodo proprio T1: 0.270 sec.
			fattore q: 1.000
			amplificazione ND (non dissipativi): 1.000
			fattore per spost. mu d: 1.000
			classe di duttilità CD: ND
			numero di modi considerati: 9
			combinaz. modale: CQC

Quota	M Sismica x g	Pos. GX	Pos. GY	E agg. X-X	E agg. Y-Y	Pos. KX	Pos. KY	(r/Ls)^2	rapp. ex/rx	rapp. ey/ry
m	daN	m	m	m	m	m	m			
3.30	5.571e+04	4.40	3.00	0.0	-0.30	0.54	3.00	1.029	0.509	0.0
2.83	8721.43	4.40	3.00	0.0	-0.30	0.54	3.00	1.029	0.509	0.0
2.36	8752.68	4.42	3.00	0.0	-0.30	0.11	3.00	0.966	0.572	4.4093e-05
1.89	7690.18	3.81	3.00	0.0	-0.30	0.11	3.00	0.966	0.491	0.002
1.41	7690.18	3.81	3.00	0.0	-0.30	0.11	3.00	0.966	0.491	0.002
0.94	7690.18	3.81	3.00	0.0	-0.30	0.11	3.00	0.966	0.491	0.002
0.47	7690.18	3.81	3.00	0.0	-0.30	0.11	3.00	0.966	0.491	0.002
Risulta	1.039e+05									

Modo	Frequenza	Periodo	Acc. Spettrale	M efficace X x g	%	M efficace Y x g	%	M efficace Z x g	%	Energia	Energia x v
	Hz	sec	g	daN		daN		daN			
1	2.835	0.353	0.706	0.03	2.71e-05	6.270e+04	60.3	490.08	0.5	0.0	0.0
2	3.698	0.270	0.706	7.209e+04	69.4	9.92	9.54e-03	154.06	0.1	0.0	0.0
3	4.420	0.226	0.706	4055.81	3.9	72.26	6.95e-02	36.47	3.51e-02	0.0	0.0
4	6.299	0.159	0.633	516.68	0.5	2697.80	2.6	9.970e+04	95.9	0.0	0.0
5	7.480	0.134	0.577	39.76	3.83e-02	3.843e+04	37.0	3029.79	2.9	0.0	0.0
6	8.086	0.124	0.554	2.725e+04	26.2	5.94	5.72e-03	532.88	0.5	0.0	0.0
7	43.288	0.023	0.328	3.77e-03	3.63e-06	34.56	3.33e-02	0.12	1.14e-04	0.0	0.0
8	53.591	0.019	0.318	4.81e-04	0.0	0.16	1.52e-04	7.56	7.28e-03	0.0	0.0
9	58.441	0.017	0.314	0.55	5.26e-04	2.34	2.25e-03	0.16	1.52e-04	0.0	0.0
Risulta				1.039e+05		1.039e+05		1.039e+05			
In percentuale				100.00		100.00		100.00			

Viale Duca Alessandro n. 11 – 43123 Parma
Cell. 335 1403156 – E mail ing.concari@gmail.com
Sito web: studioaire.it – P.IVA 02561480340

CDC	Tipo	Sigla Id	Note
5	Edk	CDC=Ed (dinamico SLU) alfa=0.0 (ecc. -)	
			categoria suolo: C
			fattore di sito S = 1.000
			ordinata spettro (tratto Tb-Tc) = 0.706 g
			angolo di ingresso:0.0
			eccentricità aggiuntiva: negativa
			periodo proprio T1: 0.266 sec.
			fattore q: 1.000
			amplificazione ND (non dissipativi): 1.000
			fattore per spost. mu d: 1.000
			classe di duttilità CD: ND
			numero di modi considerati: 9
			combinaz. modale: CQC

Quota	M Sismica x g	Pos. GX	Pos. GY	E agg. X-X	E agg. Y-Y	Pos. KX	Pos. KY	(r/Ls)^2	rapp. ex/rx	rapp. ey/ry
m	daN	m	m	m	m	m	m			
3.30	5.571e+04	4.40	3.00	0.0	0.30	0.54	3.00	1.029	0.509	0.0
2.83	8721.43	4.40	3.00	0.0	0.30	0.54	3.00	1.029	0.509	0.0
2.36	8752.68	4.42	3.00	0.0	0.30	0.11	3.00	0.966	0.572	4.4093e-05
1.89	7690.18	3.81	3.00	0.0	0.30	0.11	3.00	0.966	0.491	0.002
1.41	7690.18	3.81	3.00	0.0	0.30	0.11	3.00	0.966	0.491	0.002
0.94	7690.18	3.81	3.00	0.0	0.30	0.11	3.00	0.966	0.491	0.002
0.47	7690.18	3.81	3.00	0.0	0.30	0.11	3.00	0.966	0.491	0.002
Risulta	1.039e+05									

Modo	Frequenza	Periodo	Acc. Spettrale	M efficace X x g	%	M efficace Y x g	%	M efficace Z x g	%	Energia	Energia x v
	Hz	sec	g	daN		daN		daN			
1	2.835	0.353	0.706	0.42	4.04e-04	6.270e+04	60.3	490.67	0.5	0.0	0.0
2	3.762	0.266	0.706	7.612e+04	73.2	1.83	1.76e-03	179.03	0.2	0.0	0.0
3	4.359	0.229	0.706	46.09	4.43e-02	90.08	8.67e-02	5.12	4.92e-03	0.0	0.0
4	6.299	0.159	0.633	519.83	0.5	2649.32	2.5	9.975e+04	96.0	0.0	0.0
5	7.479	0.134	0.577	106.86	0.1	3.842e+04	37.0	2914.85	2.8	0.0	0.0
6	8.061	0.124	0.555	2.716e+04	26.1	46.98	4.52e-02	600.29	0.6	0.0	0.0
7	43.364	0.023	0.328	0.07	7.18e-05	34.83	3.35e-02	0.08	8.14e-05	0.0	0.0
8	53.495	0.019	0.318	5.23e-04	0.0	0.02	1.66e-05	7.57	7.28e-03	0.0	0.0
9	57.944	0.017	0.315	0.46	4.46e-04	2.18	2.09e-03	0.17	1.67e-04	0.0	0.0
Risulta				1.039e+05		1.039e+05		1.039e+05			
In percentuale				100.00		100.00		100.00			

CDC	Tipo	Sigla Id	Note
6	Edk	CDC=Ed (dinamico SLU) alfa=90.00 (ecc. +)	
			categoria suolo: C
			fattore di sito S = 1.000
			ordinata spettro (tratto Tb-Tc) = 0.706 g
			angolo di ingresso:90.00
			eccentricità aggiuntiva: positiva
			periodo proprio T1: 0.353 sec.
			fattore q: 1.000
			amplificazione ND (non dissipativi): 1.000
			fattore per spost. mu d: 1.000
			classe di duttilità CD: ND
			numero di modi considerati: 9
			combinaz. modale: CQC

Quota	M Sismica x g	Pos. GX	Pos. GY	E agg. X-X	E agg. Y-Y	Pos. KX	Pos. KY	(r/Ls)^2	rapp. ex/rx	rapp. ey/ry
m	daN	m	m	m	m	m	m			
3.30	5.571e+04	4.40	3.00	0.44	0.0	0.54	3.00	1.029	0.509	0.0
2.83	8721.43	4.40	3.00	0.44	0.0	0.54	3.00	1.029	0.509	0.0
2.36	8752.68	4.42	3.00	0.44	0.0	0.11	3.00	0.966	0.572	4.4093e-05
1.89	7690.18	3.81	3.00	0.44	0.0	0.11	3.00	0.966	0.491	0.002
1.41	7690.18	3.81	3.00	0.44	0.0	0.11	3.00	0.966	0.491	0.002
0.94	7690.18	3.81	3.00	0.44	0.0	0.11	3.00	0.966	0.491	0.002
0.47	7690.18	3.81	3.00	0.44	0.0	0.11	3.00	0.966	0.491	0.002
Risulta	1.039e+05									

Modo	Frequenza	Periodo	Acc. Spettrale	M efficace X x g	%	M efficace Y x g	%	M efficace Z x g	%	Energia	Energia x v
	Hz	sec	g	daN		daN		daN			
1	2.830	0.353	0.706	6.71	6.45e-03	6.268e+04	60.3	485.93	0.5	0.0	0.0
2	3.749	0.267	0.706	7.513e+04	72.3	13.99	1.35e-02	154.23	0.1	0.0	0.0
3	4.382	0.228	0.706	1021.74	1.0	8.24	7.92e-03	70.51	6.78e-02	0.0	0.0
4	6.300	0.159	0.633	513.98	0.5	2642.53	2.5	9.974e+04	96.0	0.0	0.0
5	7.476	0.134	0.577	128.48	0.1	3.850e+04	37.0	2885.60	2.8	0.0	0.0
6	8.066	0.124	0.555	2.715e+04	26.1	66.59	6.41e-02	600.94	0.6	0.0	0.0
7	43.826	0.023	0.327	0.01	1.35e-05	36.43	3.50e-02	0.13	1.22e-04	0.0	0.0

Viale Duca Alessandro n. 11 – 43123 Parma
Cell. 335 1403156 – E mail ing.concari@gmail.com
Sito web: studioaire.it – P.IVA 02561480340

Modo	Frequenza	Periodo	Acc. Spettrale	M efficace X x g	%	M efficace Y x g	%	M efficace Z x g	%	Energia	Energia x v
8	52.958	0.019	0.318	5.80e-03	5.58e-06	0.05	4.74e-05	7.88	7.58e-03	0.0	0.0
9	63.429	0.016	0.311	0.51	4.95e-04	4.30e-03	4.14e-06	9.69e-03	9.32e-06	0.0	0.0
Risulta				1.039e+05		1.039e+05		1.039e+05			
In percentuale				100.00		100.00		100.00			

CDC	Tipo	Sigla Id	Note
7	Edk	CDC=Ed (dinamico SLU) alfa=90.00 (ecc. -)	
			categoria suolo: C
			fattore di sito S = 1.000
			ordinata spettro (tratto Tb-Tc) = 0.706 g
			angolo di ingresso:90.00
			eccentricità aggiuntiva: negativa
			periodo proprio T1: 0.354 sec.
			fattore q: 1.000
			amplificazione ND (non dissipativi): 1.000
			fattore per spost. mu d: 1.000
			classe di duttilità CD: ND
			numero di modi considerati: 9
			combinaz. modale: CQC

Quota	M Sismica x g	Pos. GX	Pos. GY	E agg. X-X	E agg. Y-Y	Pos. KX	Pos. KY	(r/Ls)^2	rapp. ex/rx	rapp. ey/ry
m	daN	m	m	m	m	m	m			
3.30	5.571e+04	4.40	3.00	-0.44	0.0	0.54	3.00	1.029	0.509	0.0
2.83	8721.43	4.40	3.00	-0.44	0.0	0.54	3.00	1.029	0.509	0.0
2.36	8752.68	4.42	3.00	-0.44	0.0	0.11	3.00	0.966	0.572	4.4093e-05
1.89	7690.18	3.81	3.00	-0.44	0.0	0.11	3.00	0.966	0.491	0.002
1.41	7690.18	3.81	3.00	-0.44	0.0	0.11	3.00	0.966	0.491	0.002
0.94	7690.18	3.81	3.00	-0.44	0.0	0.11	3.00	0.966	0.491	0.002
0.47	7690.18	3.81	3.00	-0.44	0.0	0.11	3.00	0.966	0.491	0.002
Risulta	1.039e+05									

Modo	Frequenza	Periodo	Acc. Spettrale	M efficace X x g	%	M efficace Y x g	%	M efficace Z x g	%	Energia	Energia x v
	Hz	sec	g	daN		daN		daN			
1	2.826	0.354	0.706	4.41	4.24e-03	6.323e+04	60.8	477.14	0.5	0.0	0.0
2	3.749	0.267	0.706	7.506e+04	72.2	1.20	1.16e-03	200.12	0.2	0.0	0.0
3	4.379	0.228	0.706	1101.78	1.1	226.91	0.2	16.93	1.63e-02	0.0	0.0
4	6.301	0.159	0.633	530.54	0.5	2448.65	2.4	9.996e+04	96.2	0.0	0.0
5	7.530	0.133	0.575	26.87	2.58e-02	3.800e+04	36.6	2739.29	2.6	0.0	0.0
6	8.065	0.124	0.555	2.723e+04	26.2	1.46	1.41e-03	547.29	0.5	0.0	0.0
7	43.477	0.023	0.328	0.01	1.32e-05	37.13	3.57e-02	0.10	9.31e-05	0.0	0.0
8	54.016	0.019	0.318	5.42e-04	0.0	0.02	2.17e-05	7.46	7.17e-03	0.0	0.0
9	63.445	0.016	0.311	0.51	4.94e-04	0.02	1.61e-05	0.07	7.18e-05	0.0	0.0
Risulta				1.039e+05		1.039e+05		1.039e+05			
In percentuale				100.00		100.00		100.00			

CDC	Tipo	Sigla Id	Note
8	Edk	CDC=Ed (dinamico SLD) alfa=0.0 (ecc. +)	
			categoria suolo: C
			fattore di sito S = 1.000
			ordinata spettro (tratto Tb-Tc) = 0.310 g
			angolo di ingresso:0.0
			eccentricità aggiuntiva: positiva
			periodo proprio T1: 0.270 sec.
			numero di modi considerati: 9
			combinaz. modale: CQC

Quota	M Sismica x g	Pos. GX	Pos. GY	E agg. X-X	E agg. Y-Y	Pos. KX	Pos. KY	(r/Ls)^2	rapp. ex/rx	rapp. ey/ry
m	daN	m	m	m	m	m	m			
3.30	5.571e+04	4.40	3.00	0.0	-0.30	0.54	3.00	1.029	0.509	0.0
2.83	8721.43	4.40	3.00	0.0	-0.30	0.54	3.00	1.029	0.509	0.0
2.36	8752.68	4.42	3.00	0.0	-0.30	0.11	3.00	0.966	0.572	4.4093e-05
1.89	7690.18	3.81	3.00	0.0	-0.30	0.11	3.00	0.966	0.491	0.002
1.41	7690.18	3.81	3.00	0.0	-0.30	0.11	3.00	0.966	0.491	0.002
0.94	7690.18	3.81	3.00	0.0	-0.30	0.11	3.00	0.966	0.491	0.002
0.47	7690.18	3.81	3.00	0.0	-0.30	0.11	3.00	0.966	0.491	0.002
Risulta	1.039e+05									

Modo	Frequenza	Periodo	Acc. Spettrale	M efficace X x g	%	M efficace Y x g	%	M efficace Z x g	%	Energia	Energia x v
	Hz	sec	g	daN		daN		daN			
1	2.835	0.353	0.310	0.03	2.71e-05	6.270e+04	60.3	490.08	0.5	0.0	0.0
2	3.698	0.270	0.310	7.209e+04	69.4	9.92	9.54e-03	154.06	0.1	0.0	0.0
3	4.420	0.226	0.310	4055.81	3.9	72.26	6.95e-02	36.47	3.51e-02	0.0	0.0

Viale Duca Alessandro n. 11 – 43123 Parma
Cell. 335 1403156 – E mail ing.concari@gmail.com
Sito web: studioaire.it – P.IVA 02561480340

Modo	Frequenza	Periodo	Acc. Spettrale	M efficace X x g	%	M efficace Y x g	%	M efficace Z x g	%	Energia	Energia x v
4	6.299	0.159	0.295	516.68	0.5	2697.80	2.6	9.970e+04	95.9	0.0	0.0
5	7.480	0.134	0.268	39.76	3.83e-02	3.843e+04	37.0	3029.79	2.9	0.0	0.0
6	8.086	0.124	0.257	2.725e+04	26.2	5.94	5.72e-03	532.88	0.5	0.0	0.0
7	43.288	0.023	0.148	3.77e-03	3.63e-06	34.56	3.33e-02	0.12	1.14e-04	0.0	0.0
8	53.591	0.019	0.143	4.81e-04	0.0	0.16	1.52e-04	7.56	7.28e-03	0.0	0.0
9	58.441	0.017	0.142	0.55	5.26e-04	2.34	2.25e-03	0.16	1.52e-04	0.0	0.0
Risulta				1.039e+05		1.039e+05		1.039e+05			
In percentuale				100.00		100.00		100.00			

CDC	Tipo	Sigla Id	Note
9	Edk	CDC=Ed (dinamico SLD) alfa=0.0 (ecc. -)	
			categoria suolo: C
			fattore di sito S = 1.000
			ordinata spettro (tratto Tb-Tc) = 0.310 g
			angolo di ingresso:0.0
			eccentricità aggiuntiva: negativa
			periodo proprio T1: 0.266 sec.
			numero di modi considerati: 9
			combinaz. modale: CQC

Quota	M Sismica x g	Pos. GX	Pos. GY	E agg. X-X	E agg. Y-Y	Pos. KX	Pos. KY	(r/Ls)^2	rapp. ex/rx	rapp. ey/ry
m	daN	m	m	m	m	m	m			
3.30	5.571e+04	4.40	3.00	0.0	0.30	0.54	3.00	1.029	0.509	0.0
2.83	8721.43	4.40	3.00	0.0	0.30	0.54	3.00	1.029	0.509	0.0
2.36	8752.68	4.42	3.00	0.0	0.30	0.11	3.00	0.966	0.572	4.4093e-05
1.89	7690.18	3.81	3.00	0.0	0.30	0.11	3.00	0.966	0.491	0.002
1.41	7690.18	3.81	3.00	0.0	0.30	0.11	3.00	0.966	0.491	0.002
0.94	7690.18	3.81	3.00	0.0	0.30	0.11	3.00	0.966	0.491	0.002
0.47	7690.18	3.81	3.00	0.0	0.30	0.11	3.00	0.966	0.491	0.002
Risulta	1.039e+05									

Modo	Frequenza	Periodo	Acc. Spettrale	M efficace X x g	%	M efficace Y x g	%	M efficace Z x g	%	Energia	Energia x v
	Hz	sec	g	daN		daN		daN			
1	2.835	0.353	0.310	0.42	4.04e-04	6.270e+04	60.3	490.67	0.5	0.0	0.0
2	3.762	0.266	0.310	7.612e+04	73.2	1.83	1.76e-03	179.03	0.2	0.0	0.0
3	4.359	0.229	0.310	46.09	4.43e-02	90.08	8.67e-02	5.12	4.92e-03	0.0	0.0
4	6.299	0.159	0.295	519.83	0.5	2649.32	2.5	9.975e+04	96.0	0.0	0.0
5	7.479	0.134	0.268	106.86	0.1	3.842e+04	37.0	2914.85	2.8	0.0	0.0
6	8.061	0.124	0.258	2.716e+04	26.1	46.98	4.52e-02	600.29	0.6	0.0	0.0
7	43.364	0.023	0.148	0.07	7.18e-05	34.83	3.35e-02	0.08	8.14e-05	0.0	0.0
8	53.495	0.019	0.143	5.23e-04	0.0	0.02	1.66e-05	7.57	7.28e-03	0.0	0.0
9	57.944	0.017	0.142	0.46	4.46e-04	2.18	2.09e-03	0.17	1.67e-04	0.0	0.0
Risulta				1.039e+05		1.039e+05		1.039e+05			
In percentuale				100.00		100.00		100.00			

CDC	Tipo	Sigla Id	Note
10	Edk	CDC=Ed (dinamico SLD) alfa=90.00 (ecc. +)	
			categoria suolo: C
			fattore di sito S = 1.000
			ordinata spettro (tratto Tb-Tc) = 0.310 g
			angolo di ingresso:90.00
			eccentricità aggiuntiva: positiva
			periodo proprio T1: 0.353 sec.
			numero di modi considerati: 9
			combinaz. modale: CQC

Quota	M Sismica x g	Pos. GX	Pos. GY	E agg. X-X	E agg. Y-Y	Pos. KX	Pos. KY	(r/Ls)^2	rapp. ex/rx	rapp. ey/ry
m	daN	m	m	m	m	m	m			
3.30	5.571e+04	4.40	3.00	0.44	0.0	0.54	3.00	1.029	0.509	0.0
2.83	8721.43	4.40	3.00	0.44	0.0	0.54	3.00	1.029	0.509	0.0
2.36	8752.68	4.42	3.00	0.44	0.0	0.11	3.00	0.966	0.572	4.4093e-05
1.89	7690.18	3.81	3.00	0.44	0.0	0.11	3.00	0.966	0.491	0.002
1.41	7690.18	3.81	3.00	0.44	0.0	0.11	3.00	0.966	0.491	0.002
0.94	7690.18	3.81	3.00	0.44	0.0	0.11	3.00	0.966	0.491	0.002
0.47	7690.18	3.81	3.00	0.44	0.0	0.11	3.00	0.966	0.491	0.002
Risulta	1.039e+05									

Modo	Frequenza	Periodo	Acc. Spettrale	M efficace X x g	%	M efficace Y x g	%	M efficace Z x g	%	Energia	Energia x v
	Hz	sec	g	daN		daN		daN			
1	2.830	0.353	0.310	6.71	6.45e-03	6.268e+04	60.3	485.93	0.5	0.0	0.0
2	3.749	0.267	0.310	7.513e+04	72.3	13.99	1.35e-02	154.23	0.1	0.0	0.0
3	4.382	0.228	0.310	1021.74	1.0	8.24	7.92e-03	70.51	6.78e-02	0.0	0.0

Viale Duca Alessandro n. 11 – 43123 Parma
Cell. 335 1403156 – E mail ing.concari@gmail.com
Sito web: studioaire.it – P.IVA 02561480340

Modo	Frequenza	Periodo	Acc. Spettrale	M efficace X x g	%	M efficace Y x g	%	M efficace Z x g	%	Energia	Energia x v
4	6.300	0.159	0.295	513.98	0.5	2642.53	2.5	9.974e+04	96.0	0.0	0.0
5	7.476	0.134	0.268	128.48	0.1	3.850e+04	37.0	2885.60	2.8	0.0	0.0
6	8.066	0.124	0.257	2.715e+04	26.1	66.59	6.41e-02	600.94	0.6	0.0	0.0
7	43.826	0.023	0.148	0.01	1.35e-05	36.43	3.50e-02	0.13	1.22e-04	0.0	0.0
8	52.958	0.019	0.143	5.80e-03	5.58e-06	0.05	4.74e-05	7.88	7.58e-03	0.0	0.0
9	63.429	0.016	0.140	0.51	4.95e-04	4.30e-03	4.14e-06	9.69e-03	9.32e-06	0.0	0.0
Risulta				1.039e+05		1.039e+05		1.039e+05			
In percentuale				100.00		100.00		100.00			

CDC	Tipo	Sigla Id	Note
11	Edk	CDC=Ed (dinamico SLD) alfa=90.00 (ecc. -)	
			categoria suolo: C
			fattore di sito S = 1.000
			ordinata spettro (tratto Tb-Tc) = 0.310 g
			angolo di ingresso:90.00
			eccentricità aggiuntiva: negativa
			periodo proprio T1: 0.354 sec.
			numero di modi considerati: 9
			combinaz. modale: CQC

Quota	M Sismica x g	Pos. GX	Pos. GY	E agg. X-X	E agg. Y-Y	Pos. KX	Pos. KY	(r/Ls)^2	rapp. ex/rx	rapp. ey/ry
m	daN	m	m	m	m	m	m			
3.30	5.571e+04	4.40	3.00	-0.44	0.0	0.54	3.00	1.029	0.509	0.0
2.83	8721.43	4.40	3.00	-0.44	0.0	0.54	3.00	1.029	0.509	0.0
2.36	8752.68	4.42	3.00	-0.44	0.0	0.11	3.00	0.966	0.572	4.4093e-05
1.89	7690.18	3.81	3.00	-0.44	0.0	0.11	3.00	0.966	0.491	0.002
1.41	7690.18	3.81	3.00	-0.44	0.0	0.11	3.00	0.966	0.491	0.002
0.94	7690.18	3.81	3.00	-0.44	0.0	0.11	3.00	0.966	0.491	0.002
0.47	7690.18	3.81	3.00	-0.44	0.0	0.11	3.00	0.966	0.491	0.002
Risulta	1.039e+05									

Modo	Frequenza	Periodo	Acc. Spettrale	M efficace X x g	%	M efficace Y x g	%	M efficace Z x g	%	Energia	Energia x v
	Hz	sec	g	daN		daN		daN			
1	2.826	0.354	0.310	4.41	4.24e-03	6.323e+04	60.8	477.14	0.5	0.0	0.0
2	3.749	0.267	0.310	7.506e+04	72.2	1.20	1.16e-03	200.12	0.2	0.0	0.0
3	4.379	0.228	0.310	1101.78	1.1	226.91	0.2	16.93	1.63e-02	0.0	0.0
4	6.301	0.159	0.295	530.54	0.5	2448.65	2.4	9.996e+04	96.2	0.0	0.0
5	7.530	0.133	0.267	26.87	2.58e-02	3.800e+04	36.6	2739.29	2.6	0.0	0.0
6	8.065	0.124	0.258	2.723e+04	26.2	1.46	1.41e-03	547.29	0.5	0.0	0.0
7	43.477	0.023	0.148	0.01	1.32e-05	37.13	3.57e-02	0.10	9.31e-05	0.0	0.0
8	54.016	0.019	0.143	5.42e-04	0.0	0.02	2.17e-05	7.46	7.17e-03	0.0	0.0
9	63.445	0.016	0.140	0.51	4.94e-04	0.02	1.61e-05	0.07	7.18e-05	0.0	0.0
Risulta				1.039e+05		1.039e+05		1.039e+05			
In percentuale				100.00		100.00		100.00			

Viale Duca Alessandro n. 11 – 43123 Parma
Cell. 335 1403156 – E mail ing.concari@gmail.com
Sito web: studioaire.it – P.IVA 02561480340

2.2 – RISULTATI

Per motivi di spazio nel presente paragrafo si riportano i risultati relativi alle combinazioni che generano i maggiori spostamenti nodali (SLE 287, 301, 323).

RISULTATI NODALI

MODELLO 1 SCALA ANTINCENDIO

Nodo	Cmb	Traslazione X	Traslazione Y	Traslazione Z	Rotazione X	Rotazione Y	Rotazione Z
		cm	cm	cm			
7	301	0.01	0.02	-6.38e-03	-4.26e-04	4.04e-04	1.35e-04
13	323	0.02	0.11	0.02	-7.92e-04	-1.29e-04	1.25e-04
14	323	0.03	0.11	0.02	-9.43e-04	-1.39e-06	1.48e-04
15	323	0.04	0.13	0.02	-1.67e-03	6.41e-05	2.75e-04
17	287	0.07	0.07	8.43e-03	-2.35e-04	1.39e-04	-3.99e-05
18	287	0.08	0.07	7.00e-03	-2.50e-04	1.48e-04	-8.23e-05
19	287	0.10	0.04	-0.02	-4.41e-04	2.34e-04	-2.75e-04
19	301	-0.06	0.04	-0.21	-1.63e-03	8.49e-04	3.09e-04
19	323	-5.54e-03	0.13	-0.11	-1.27e-03	6.74e-04	1.90e-04
20	301	-0.07	0.06	-0.30	-2.27e-03	9.54e-04	3.23e-04
20	323	0.01	0.15	-0.18	-1.63e-03	7.57e-04	2.41e-04
24	287	0.11	-0.06	0.02	3.58e-04	9.75e-05	-6.60e-05
29	287	0.12	-0.04	0.06	2.43e-04	9.75e-05	-1.48e-04
30	287	0.12	-0.04	0.06	1.82e-04	1.50e-04	-1.47e-04
33	323	0.02	0.18	-6.70e-03	-2.40e-03	6.42e-05	4.67e-04
34	323	0.04	0.34	0.08	-4.64e-04	-5.93e-04	1.18e-03
35	323	0.05	0.41	0.13	-0.02	-5.28e-04	5.83e-04
37	287	0.29	0.08	-0.08	-1.35e-03	1.88e-03	-4.45e-04
37	301	-0.06	0.07	-0.71	-4.75e-03	7.14e-03	6.27e-04
38	287	0.33	-0.02	-0.54	-5.20e-03	2.16e-03	-4.92e-04
38	301	-0.10	0.27	-2.44	-0.02	8.07e-03	7.18e-04
38	323	5.16e-04	0.43	-1.80	-0.02	6.48e-03	6.78e-04
Nodo		**Traslazione X**	**Traslazione Y**	**Traslazione Z**	**Rotazione X**	**Rotazione Y**	**Rotazione Z**
		-0.10	-0.06	-2.44	-0.02	-5.93e-04	-4.92e-04
		0.33	0.43	0.13	3.58e-04	8.07e-03	1.18e-03

MODELLO 2 VANO ASCENSORE

Nodo	Cmb	Traslazione X	Traslazione Y	Traslazione Z	Rotazione X	Rotazione Y	Rotazione Z
		cm	cm	cm			
1	1	0.0	0.0	0.0	0.0	0.0	0.0
1	53	0.0	0.0	0.0	0.0	0.0	0.0
1	85	0.0	0.0	0.0	0.0	0.0	0.0
1	117	0.0	0.0	0.0	0.0	0.0	0.0
1	143	0.0	0.0	0.0	0.0	0.0	0.0
1	159	0.0	0.0	0.0	0.0	0.0	0.0
2	26	-0.08	1.27	-0.20	-5.68e-04	-1.92e-05	-9.84e-05
2	35	0.02	-0.83	-0.47	3.85e-04	-2.96e-04	2.15e-04
...							
19	159	0.0	0.0	0.0	0.0	0.0	0.0
Nodo		**Traslazione X**	**Traslazione Y**	**Traslazione Z**	**Rotazione X**	**Rotazione Y**	**Rotazione Z**
		-0.98	-1.71	-0.47	-1.17e-03	-1.99e-03	-3.24e-03
		0.45	1.99	8.52e-03	9.90e-04	1.42e-03	2.09e-03

MODELLO LOCALE TECNICO

Nodo	Cmb	Traslazione X	Traslazione Y	Traslazione Z	Rotazione X	Rotazione Y	Rotazione Z
		cm	cm	cm			
1	6	0.53	-1.22	-1.10	1.86e-03	3.20e-04	8.02e-05
1	7	0.43	-1.01	-1.39	1.54e-03	2.24e-04	7.13e-05
1	8	0.53	-1.22	-1.27	1.86e-03	3.20e-04	8.02e-05
1	37	1.46	-0.49	-0.27	4.65e-04	1.96e-03	-1.03e-04
1	50	0.55	-2.66	0.36	4.88e-03	7.54e-04	5.66e-04
1	55	0.24	0.23	-1.75	-1.45e-03	-2.54e-04	-2.08e-04
1	69	0.86	-0.61	-0.62	7.78e-04	9.78e-04	-6.73e-06
1	82	0.46	-1.64	-0.31	2.84e-03	4.52e-04	2.83e-04
...							
694	116	0.42	-0.85	-1.59	1.26e-03	1.90e-04	4.58e-05

Viale Duca Alessandro n. 11 – 43123 Parma
Cell. 335 1403156 – E mail ing.concari@gmail.com
Sito web: studioaire.it – P.IVA 02561480340

Nodo	Cmb	Traslazione X	Traslazione Y	Traslazione Z	Rotazione X	Rotazione Y	Rotazione Z
Nodo		Traslazione X	Traslazione Y	Traslazione Z	Rotazione X	Rotazione Y	Rotazione Z
		-0.35	-2.66	-3.22	-1.77e-03	-1.61e-03	-3.75e-04
		1.65	0.24	0.64	5.34e-03	2.23e-03	9.95e-04

RISULTATI ELEMENTI TIPO TRAVE

MODELLO 1 SCALA ANTINCENDIO

Pilas.	Cmb	M3 mx/mn	M2 mx/mn	D 2 / D 3	Q 2 / Q 3	Pos.	N	V 2	V 3	T	M 2	M 3
		daN cm	daN cm	cm	daN	cm	daN	daN	daN	daN cm	daN cm	daN
cm												
2	7	5394.25	6.44	0.01	0.0	0.0	-635.68	154.12	0.18	32.37	0.0	0.0
		0.0	0.0	7.51e-04	0.0	17.5	-629.01	154.12	0.18	32.37	3.22	
2697.13												
						35.0	-622.33	154.12	0.18	32.37	6.44	
5394.25												
2	25	0.0	0.0	8.62e-03	0.0	0.0	151.09	-321.31	-0.04	0.95	0.0	0.0
		-1.125e+04	-1.30	-0.01	0.0	17.5	156.23	-321.31	-0.04	0.95	-0.65	-
5622.86												
						35.0	161.37	-321.31	-0.04	0.95	-1.30	-
1.125e+04												
2	27	1.073e+04	1.87	-4.45e-03	0.0	0.0	-309.47	306.51	0.05	8.52	0.0	0.0
		0.0	0.0	9.81e-03	0.0	17.5	-304.33	306.51	0.05	8.52	0.94	
5363.94												
						35.0	-299.19	306.51	0.05	8.52	1.87	
1.073e+04												
2	79	4544.00	728.26	9.00e-03	0.0	0.0	-496.29	129.83	25.95	909.88	0.0	0.0
		0.0	0.0	-0.15	-10.28	17.5	-489.61	129.83	20.81	909.88	409.10	
2272.00												
						35.0	-482.94	129.83	15.67	909.88	728.26	
4544.00												
2	117	0.0	32.87	0.02	6.17	0.0	-43.45	-502.28	0.94	65.00	0.0	0.0
		-1.747e+04	0.0	-0.02	0.0	17.5	-36.77	-499.20	0.94	65.00	16.44	-
8762.99												
						35.0	-30.09	-496.12	0.94	65.00	32.87	-
1.747e+04												
2	121	0.0	29.20	0.01	6.17	0.0	256.51	-482.84	0.83	46.82	0.0	0.0
		-1.679e+04	0.0	-0.02	0.0	17.5	261.65	-479.76	0.83	46.82	14.60	-
8422.71												
						35.0	266.79	-476.67	0.83	46.82	29.20	-
1.679e+04												
2	161	0.0	4602.27	0.02	0.0	0.0	350.12	-846.16	131.49	5827.22	0.0	0.0
		-2.962e+04	0.0	-0.85	0.0	17.5	355.26	-846.16	131.49	5827.22	2301.14	-
1.481e+04												
						35.0	360.40	-846.16	131.49	5827.22	4602.27	-
2.962e+04												
2	164	2.841e+04	0.0	-0.01	0.0	0.0	-824.16	811.68	-131.36	-5798.60	0.0	0.0
		0.0	-4597.61	0.84	0.0	17.5	-819.02	811.68	-131.36	-5798.60	-2298.80	
1.420e+04												
						35.0	-813.88	811.68	-131.36	-5798.60	-4597.61	
2.841e+04												
2	165	0.0	4673.78	0.02	0.0	0.0	337.86	-819.29	133.54	5916.10	0.0	0.0
		-2.868e+04	0.0	-0.86	0.0	17.5	343.00	-819.29	133.54	5916.10	2336.89	-
1.434e+04												
						35.0	348.14	-819.29	133.54	5916.10	4673.78	-
2.868e+04												
2	168	2.747e+04	0.0	-9.57e-03	0.0	0.0	-811.90	784.81	-133.40	-5887.47	0.0	0.0
		0.0	-4669.11	0.85	0.0	17.5	-806.76	784.81	-133.40	-5887.47	-2334.56	
1.373e+04												
						35.0	-801.62	784.81	-133.40	-5887.47	-4669.11	
2.747e+04												
2	193	0.0	2022.59	0.02	0.0	0.0	23.14	-384.24	57.79	2567.11	0.0	0.0
		-1.345e+04	0.0	-0.37	0.0	17.5	28.27	-384.24	57.79	2567.11	1011.29	-
6724.24												
						35.0	33.41	-384.24	57.79	2567.11	2022.59	-
1.345e+04												
2	196	1.224e+04	0.0	-6.30e-04	0.0	0.0	-497.17	349.76	-57.65	-2538.49	0.0	0.0
		0.0	-2017.92	0.37	0.0	17.5	-492.03	349.76	-57.65	-2538.49	-1008.96	
6120.83												
						35.0	-486.89	349.76	-57.65	-2538.49	-2017.92	
1.224e+04												
2	197	0.0	2053.60	0.01	0.0	0.0	18.63	-373.70	58.67	2605.70	0.0	0.0
		-1.308e+04	0.0	-0.38	0.0	17.5	23.77	-373.70	58.67	2605.70	1026.80	-
6539.80												
						35.0	28.91	-373.70	58.67	2605.70	2053.60	-
1.308e+04												
2	200	1.187e+04	0.0	-3.20e-04	0.0	0.0	-492.66	339.22	-58.54	-2577.07	0.0	0.0
		0.0	-2048.94	0.37	0.0	17.5	-487.53	339.22	-58.54	-2577.07	-1024.47	
5936.39												
						35.0	-482.39	339.22	-58.54	-2577.07	-2048.94	
1.187e+04												
2	225	0.0	1630.04	0.01	0.0	0.0	-26.98	-313.49	46.57	2071.06	0.0	0.0
		-1.097e+04	0.0	-0.30	0.0	17.5	-21.84	-313.49	46.57	2071.06	815.02	-
5486.12												

Viale Duca Alessandro n. 11 – 43123 Parma
Cell. 335 1403156 – E mail ing.concari@gmail.com
Sito web: studioaire.it – P.IVA 02561480340

						35.0	-16.70	-313.49	46.57	2071.06	1630.04	-
1.097e+04												
2	228	9765.42	0.0	8.94e-04	0.0	0.0	-447.05	279.01	-46.44	-2042.43	0.0	0.0
		0.0	-1625.38	0.30	0.0	17.5	-441.92	279.01	-46.44	-2042.43	-812.69	
4882.71												
						35.0	-436.78	279.01	-46.44	-2042.43	-1625.38	
9765.42												
2	229	0.0	1654.86	0.01	0.0	0.0	-30.63	-305.03	47.28	2101.96	0.0	0.0
		-1.068e+04	0.0	-0.30	0.0	17.5	-25.49	-305.03	47.28	2101.96	827.43	-
5338.06												
						35.0	-20.35	-305.03	47.28	2101.96	1654.86	-
1.068e+04												
2	232	9469.29	0.0	1.20e-03	0.0	0.0	-443.41	270.55	-47.15	-2073.33	0.0	0.0
		0.0	-1650.20	0.30	0.0	17.5	-438.27	270.55	-47.15	-2073.33	-825.10	
4734.64												
						35.0	-433.13	270.55	-47.15	-2073.33	-1650.20	
9469.29												
2	255	3561.65	4.33	8.02e-03	0.0	0.0	-434.35	101.76	0.12	22.21	0.0	0.0
		0.0	0.0	3.77e-04	0.0	17.5	-429.21	101.76	0.12	22.21	2.17	
1780.82												
						35.0	-424.07	101.76	0.12	22.21	4.33	
3561.65												
2	257	0.0	0.0	6.44e-03	0.0	0.0	74.33	-216.67	-0.02	2.21	0.0	0.0
		-7583.45	-0.77	-8.07e-03	0.0	17.5	79.47	-216.67	-0.02	2.21	-0.39	-
3791.73												
						35.0	84.61	-216.67	-0.02	2.21	-0.77	-
7583.45												
2	259	7065.62	1.34	-2.27e-03	0.0	0.0	-232.71	201.87	0.04	7.26	0.0	0.0
		0.0	0.0	6.23e-03	0.0	17.5	-227.57	201.87	0.04	7.26	0.67	
3532.81												
						35.0	-222.43	201.87	0.04	7.26	1.34	
7065.62												
2	291	2994.81	485.54	6.28e-03	0.0	0.0	-341.42	85.57	17.30	607.22	0.0	0.0
		0.0	0.0	-0.10	-6.85	17.5	-336.28	85.57	13.87	607.22	272.75	
1497.40												
						35.0	-331.14	85.57	10.45	607.22	485.54	
2994.81												
2	305	0.0	19.57	8.75e-03	4.11	0.0	144.61	-324.36	0.56	32.79	0.0	0.0
		-1.128e+04	0.0	-0.01	0.0	17.5	149.75	-322.30	0.56	32.79	9.78	-
5658.30												
						35.0	154.89	-320.25	0.56	32.79	19.57	-
1.128e+04												
2	309	0.0	21.95	0.01	4.11	0.0	-39.52	-335.84	0.63	43.96	0.0	0.0
		-1.168e+04	0.0	-0.02	0.0	17.5	-34.39	-333.79	0.63	43.96	10.98	-
5859.25												
						35.0	-29.25	-331.73	0.63	43.96	21.95	-
1.168e+04												
2	325	0.0	0.29	2.08e-03	0.0	0.0	-79.19	-7.40	8.17e-03	4.74	0.0	0.0
		-258.92	0.0	-9.22e-04	0.0	17.5	-74.05	-7.40	8.17e-03	4.74	0.14	-
129.46												
						35.0	-68.91	-7.40	8.17e-03	4.74	0.29	-
258.92												
2	327	0.0	2.33	7.22e-03	0.0	0.0	-237.02	-17.24	0.07	14.31	0.0	0.0
		-603.41	0.0	-2.72e-03	0.0	17.5	-231.88	-17.24	0.07	14.31	1.17	-
301.71												
						35.0	-226.74	-17.24	0.07	14.31	2.33	-
603.41												
2	333	0.0	0.0	4.26e-03	0.0	0.0	-2.43	-112.03	-6.93e-03	3.47	0.0	0.0
		-3921.18	-0.24	-4.50e-03	0.0	17.5	2.71	-112.03	-6.93e-03	3.47	-0.12	-
1960.59												
						35.0	7.85	-112.03	-6.93e-03	3.47	-0.24	-
3921.18												
2	335	3403.35	0.81	-1.10e-04	0.0	0.0	-155.95	97.24	0.02	6.00	0.0	0.0
		0.0	0.0	2.65e-03	0.0	17.5	-150.81	97.24	0.02	6.00	0.41	
1701.68												
						35.0	-145.67	97.24	0.02	6.00	0.81	
3403.35												
2	337	0.0	1.80	9.39e-03	0.0	0.0	-160.26	-121.88	0.05	13.05	0.0	0.0
		-4265.68	0.0	-6.29e-03	0.0	17.5	-155.12	-121.88	0.05	13.05	0.90	-
2132.84												
						35.0	-149.98	-121.88	0.05	13.05	1.80	-
4265.68												
2	339	3058.86	2.86	5.04e-03	0.0	0.0	-313.78	87.40	0.08	15.58	0.0	0.0
		0.0	0.0	8.59e-04	0.0	17.5	-308.64	87.40	0.08	15.58	1.43	
1529.43												
						35.0	-303.50	87.40	0.08	15.58	2.86	
3058.86												
2	347	0.0	98.78	7.38e-03	0.0	0.0	-234.21	-21.46	3.51	132.27	0.0	0.0
		-751.23	0.0	-0.02	-1.37	17.5	-229.08	-21.46	2.82	132.27	55.39	-
375.61												
						35.0	-223.94	-21.46	2.14	132.27	98.78	-
751.23												
4	45	6.091e+04	1041.39	-0.07	-54.80	0.0	-2624.19	335.58	24.25	7.20	-7254.30	-
4.451e+04												
		-4.451e+04	-7254.30	-0.09	0.0	171.1	-2530.28	308.18	24.25	7.20	-3106.45	
1.054e+04												
						342.1	-2436.37	280.77	24.25	7.20	1041.39	
6.091e+04												
4	67	3.410e+04	7242.04	-0.14	-54.80	0.0	-679.39	267.55	-21.64	-16.26	7242.04	-
4.805e+04												
		-4.805e+04	-162.31	0.10	0.0	171.1	-607.15	240.15	-21.64	-16.26	3539.87	-
4631.63												

Viale Duca Alessandro n. 11 – 43123 Parma
Cell. 335 1403156 – E mail ing.concari@gmail.com
Sito web: studioaire.it – P.IVA 02561480340

342.1 -534.91 212.75 -21.64 -16.26 -162.31
3.410e+04
4 79 7.134e+04 2667.57 -0.18 -91.34 0.0 -2171.98 476.57 -6.53 -11.44 2667.57 -
7.607e+04
-7.607e+04 435.20 0.04 0.0 171.1 -2078.07 430.90 -6.53 -11.44 1551.38
1545.79
342.1 -1984.16 385.23 -6.53 -11.44 435.20
7.134e+04
4 141 1.593e+04 1147.71 0.03 0.0 0.0 -1503.58 53.80 105.27 13.13 -1.924e+04 -
2479.96
-2479.96 -1.924e+04 -0.21 -91.34 171.1 -1409.67 53.80 59.60 13.13 -5141.04
6722.71
342.1 -1315.76 53.80 13.93 13.13 1147.71
1.593e+04
4 147 -3158.64 1009.44 -0.04 0.0 0.0 -88.38 7.23 71.15 -4.50 -8456.40 -
5633.22
-5633.22 -8456.40 -0.06 -91.34 171.1 -16.14 7.23 25.48 -4.50 -192.86 -
4395.93
342.1 56.10 7.23 -20.19 -4.50 258.77 -
3158.64
4 154 1.857e+05 1.929e+04 -0.49 0.0 0.0 -2545.54 1203.44 -57.51 85.01 1.929e+04 -
2.268e+05
-2.268e+05 -388.03 0.27 0.0 171.1 -2473.30 1203.44 -57.51 85.01 9452.96 -
2.059e+04
342.1 -2401.06 1203.44 -57.51 85.01 -388.03
1.857e+05
4 155 2.065e+05 1265.71 0.50 0.0 0.0 80.95 -1022.77 69.93 -85.76 -2.267e+04
2.065e+05
-1.442e+05 -2.267e+04 -0.31 0.0 171.1 153.19 -1022.77 69.93 -85.76 -1.070e+04
3.112e+04
342.1 225.43 -1022.77 69.93 -85.76 1265.71 -
1.442e+05
4 162 1.779e+05 2.237e+04 -0.46 0.0 0.0 -2583.29 1150.24 -66.78 82.02 2.237e+04 -
2.166e+05
-2.166e+05 -484.71 0.31 0.0 171.1 -2511.05 1150.24 -66.78 82.02 1.094e+04 -
1.935e+04
342.1 -2438.81 1150.24 -66.78 82.02 -484.71
1.779e+05
4 163 1.962e+05 1362.38 0.46 0.0 0.0 118.70 -969.58 79.20 -82.77 -2.574e+04
1.962e+05
-1.364e+05 -2.574e+04 -0.35 0.0 171.1 190.94 -969.58 79.20 -82.77 -1.219e+04
2.988e+04
342.1 263.18 -969.58 79.20 -82.77 1362.38 -
1.364e+05
4 182 1.314e+05 1.746e+04 -0.44 0.0 0.0 -2799.21 802.23 -51.37 71.67 1.746e+04 -
1.469e+05
-1.469e+05 -127.95 0.24 0.0 171.1 -2726.98 802.23 -51.37 71.67 8668.48 -
7779.18
342.1 -2654.74 802.23 -51.37 71.67 -127.95
1.314e+05
4 183 1.266e+05 1005.62 0.44 0.0 0.0 334.63 -621.56 63.79 -72.42 -2.084e+04
1.266e+05
-8.992e+04 -2.084e+04 -0.28 0.0 171.1 406.87 -621.56 63.79 -72.42 -9915.32
1.831e+04
342.1 479.11 -621.56 63.79 -72.42 1005.62 -
8.992e+04
4 186 9.313e+04 7666.24 -0.22 0.0 0.0 -1812.68 579.25 -22.19 37.14 7666.24 -
1.054e+05
-1.054e+05 70.90 0.11 0.0 171.1 -1740.44 579.25 -22.19 37.14 3868.57 -
6145.37
342.1 -1668.20 579.25 -22.19 37.14 70.90
9.313e+04
4 194 8.971e+04 9018.46 -0.20 0.0 0.0 -1829.12 555.97 -26.27 35.87 9018.46 -
1.009e+05
-1.009e+05 28.11 0.13 0.0 171.1 -1756.88 555.97 -26.27 35.87 4523.28 -
5606.42
342.1 -1684.64 555.97 -26.27 35.87 28.11
8.971e+04
4 195 8.056e+04 849.57 0.20 0.0 0.0 -635.47 -375.30 38.69 -36.62 -1.239e+04
8.056e+04
-4.827e+04 -1.239e+04 -0.17 0.0 171.1 -563.23 -375.30 38.69 -36.62 -5770.12
1.614e+04
342.1 -490.99 -375.30 38.69 -36.62 849.57 -
4.827e+04
4 214 6.952e+04 7015.96 -0.20 0.0 0.0 -1932.24 406.18 -19.95 31.52 7015.96 -
7.129e+04
-7.129e+04 181.72 0.10 0.0 171.1 -1860.00 406.18 -19.95 31.52 3598.84 -
888.01
342.1 -1787.76 406.18 -19.95 31.52 181.72
6.952e+04
4 215 5.092e+04 695.95 0.20 0.0 0.0 -532.35 -225.52 32.37 -32.27 -1.039e+04
5.092e+04
-2.808e+04 -1.039e+04 -0.14 0.0 171.1 -460.11 -225.52 32.37 -32.27 -4845.68
1.142e+04
342.1 -387.87 -225.52 32.37 -32.27 695.95 -
2.808e+04
4 218 7.905e+04 5874.88 -0.17 0.0 0.0 -1700.58 484.26 -16.75 29.85 5874.88 -
8.693e+04
-8.693e+04 141.49 0.08 0.0 171.1 -1628.34 484.26 -16.75 29.85 3008.19 -
3938.68
342.1 -1556.10 484.26 -16.75 29.85 141.49
7.905e+04

Viale Duca Alessandro n. 11 – 43123 Parma
Cell. 335 1403156 – E mail ing.concari@gmail.com
Sito web: studioaire.it – P.IVA 02561480340

4 226 7.630e+04 6964.46 -0.16 0.0 0.0 -1713.81 465.52 -20.03 28.84 6964.46 -
8.331e+04
-8.331e+04 106.95 0.10 0.0 171.1 -1641.57 465.52 -20.03 28.84 3535.70 -
3505.40
342.1 -1569.33 465.52 -20.03 28.84 106.95
7.630e+04
4 227 6.294e+04 770.73 0.16 0.0 0.0 -750.78 -284.85 32.46 -29.59 -1.034e+04
6.294e+04
-3.486e+04 -1.034e+04 -0.14 0.0 171.1 -678.54 -284.85 32.46 -29.59 -4782.54
1.404e+04
342.1 -606.30 -284.85 32.46 -29.59 770.73 -
3.486e+04
4 246 6.003e+04 5353.91 -0.16 0.0 0.0 -1797.01 345.00 -14.96 25.36 5353.91 -
5.950e+04
-5.950e+04 230.65 0.08 0.0 171.1 -1724.77 345.00 -14.96 25.36 2792.28
266.70
342.1 -1652.53 345.00 -14.96 25.36 230.65
6.003e+04
4 247 3.913e+04 647.03 0.16 0.0 0.0 -667.58 -164.33 27.38 -26.11 -8725.26
3.913e+04
-1.859e+04 -8725.26 -0.12 0.0 171.1 -595.34 -164.33 27.38 -26.11 -4039.12
1.027e+04
342.1 -523.10 -164.33 27.38 -26.11 647.03 -
1.859e+04
4 273 4.165e+04 721.61 -0.05 -36.54 0.0 -1823.22 228.28 16.49 4.79 -4918.70 -
3.019e+04
-3.019e+04 -4918.70 -0.06 0.0 171.1 -1750.98 210.01 16.49 4.79 -2098.55
7292.60
342.1 -1678.74 191.74 16.49 4.79 721.61
4.165e+04
4 279 2.535e+04 4621.77 -0.10 -36.54 0.0 -637.32 189.77 -13.63 -10.87 4621.77 -
3.332e+04
-3.332e+04 -39.84 0.06 0.0 171.1 -565.08 171.50 -13.63 -10.87 2290.97 -
2426.41
342.1 -492.84 153.23 -13.63 -10.87 -39.84
2.535e+04
4 291 4.861e+04 1695.88 -0.12 -60.89 0.0 -1521.74 322.27 -4.03 -7.64 1695.88 -
5.123e+04
-5.123e+04 317.48 0.03 0.0 171.1 -1449.50 291.83 -4.03 -7.64 1006.68
1295.06
342.1 -1377.26 261.38 -4.03 -7.64 317.48
4.861e+04
4 319 505.54 672.68 -0.02 0.0 0.0 -243.31 16.22 48.23 -3.03 -5843.86 -
5044.09
-5044.09 -5843.86 -0.04 -60.89 171.1 -171.07 16.22 17.79 -3.03 -197.52 -
2269.28
342.1 -98.83 16.22 -12.66 -3.03 240.88
505.54
4 321 1.166e+04 792.49 0.02 0.0 0.0 -1076.14 40.43 70.50 8.74 -1.291e+04 -
2168.75
-2168.75 -1.291e+04 -0.14 -60.89 171.1 -1003.90 40.43 40.05 8.74 -3454.94
4746.34
342.1 -931.67 40.43 9.61 8.74 792.49
1.166e+04
4 325 7833.89 205.11 -4.20e-03 0.0 0.0 -553.17 34.20 2.41 -0.08 -618.77 -
3865.84
-3865.84 -618.77 -7.18e-03 0.0 171.1 -480.93 34.20 2.41 -0.08 -206.83
1984.03
342.1 -408.69 34.20 2.41 -0.08 205.11
7833.89
4 327 2.072e+04 438.84 -0.01 0.0 0.0 -1232.29 90.33 6.21 -0.38 -1685.67 -
1.018e+04
-1.018e+04 -1685.67 -0.02 0.0 171.1 -1160.05 90.33 6.21 -0.38 -623.42
5267.68
342.1 -1087.81 90.33 6.21 -0.38 438.84
2.072e+04
4 331 2.287e+04 477.79 -0.01 0.0 0.0 -1345.48 99.69 6.84 -0.43 -1863.49 -
1.124e+04
-1.124e+04 -1863.49 -0.02 0.0 171.1 -1273.24 99.69 6.84 -0.43 -692.85
5814.96
342.1 -1201.00 99.69 6.84 -0.43 477.79
2.287e+04
4 335 9449.37 1806.95 -0.02 0.0 0.0 -536.29 51.40 -5.02 -5.13 1806.95 -
8135.23
-8135.23 88.89 0.03 0.0 171.1 -464.05 51.40 -5.02 -5.13 947.92
657.07
342.1 -391.81 51.40 -5.02 -5.13 88.89
9449.37
4 337 1.910e+04 555.06 0.02 0.0 0.0 -1249.18 73.13 13.64 4.67 -4111.39 -
5914.62
-5914.62 -4111.39 -0.05 0.0 171.1 -1176.94 73.13 13.64 4.67 -1778.17
6594.64
342.1 -1104.70 73.13 13.64 4.67 555.06
1.910e+04
4 347 2.548e+04 434.67 -0.03 -12.18 0.0 -1271.60 130.72 5.82 -0.61 -1555.97 -
1.716e+04
-1.716e+04 -1555.97 -0.02 0.0 171.1 -1199.36 124.63 5.82 -0.61 -560.65
4682.17
342.1 -1127.12 118.54 5.82 -0.61 434.67
2.548e+04
4 349 5980.51 240.16 -3.50e-03 0.0 0.0 -495.25 26.48 13.36 0.54 -2245.96 -
3076.83

Viale Duca Alessandro n. 11 – 43123 Parma
Cell. 335 1403156 – E mail ing.concari@gmail.com
Sito web: studioaire.it – P.IVA 02561480340

		-3076.83	-2245.96	-0.02	-12.18	171.1	-423.01	26.48	7.27	0.54	-482.11	
1451.84												
						342.1	-350.77	26.48	1.18	0.54	240.16	
5980.51												
5	27	0.0	53.13	4.28e-03	0.0	0.0	-138.77	-118.91	1.52	-65.67	0.0	0.0
		-4161.73	0.0	-0.01	0.0	17.5	-133.64	-118.91	1.52	-65.67	26.57	-
2080.86												
						35.0	-128.50	-118.91	1.52	-65.67	53.13	-
4161.73												
5	47	0.0	0.0	-0.01	0.0	0.0	-665.39	-243.69	-16.97	570.69	0.0	0.0
		-8529.23	-486.01	0.10	6.17	17.5	-658.71	-243.69	-13.89	570.69	-269.99	-
4264.62												
						35.0	-652.04	-243.69	-10.80	570.69	-486.01	-
8529.23												
5	77	0.0	0.0	-0.02	0.0	0.0	-473.55	-103.01	-30.48	1043.02	0.0	0.0
		-3605.32	-886.82	0.19	10.28	17.5	-466.87	-103.01	-25.34	1043.02	-488.38	-
1802.66												
						35.0	-460.19	-103.01	-20.20	1043.02	-886.82	-
3605.32												
5	145	4.005e+04	0.0	-0.04	-10.28	0.0	686.84	1149.44	-5.02	220.46	0.0	0.0
		0.0	-175.55	0.04	0.0	17.5	691.98	1144.30	-5.02	220.46	-87.77	
2.007e+04												
						35.0	697.12	1139.16	-5.02	220.46	-175.55	
4.005e+04												
5	165	0.0	0.0	-3.46e-03	0.0	0.0	-459.27	-306.10	-170.44	7431.02	0.0	0.0
		-1.071e+04	-5965.35	1.08	0.0	17.5	-454.13	-306.10	-170.44	7431.02	-2982.67	-
5356.79												
						35.0	-448.99	-306.10	-170.44	7431.02	-5965.35	-
1.071e+04												
5	168	4649.62	5949.66	-0.01	0.0	0.0	-143.04	132.85	169.99	-7407.74	0.0	0.0
		0.0	0.0	-1.07	0.0	17.5	-137.90	132.85	169.99	-7407.74	2974.83	
2324.81												
						35.0	-132.77	132.85	169.99	-7407.74	5949.66	
4649.62												
5	182	0.0	430.48	0.07	0.0	0.0	-2283.90	-2949.34	12.30	-577.76	0.0	0.0
		-1.032e+05	0.0	-0.05	0.0	17.5	-2278.76	-2949.34	12.30	-577.76	215.24	-
5.161e+04												
						35.0	-2273.62	-2949.34	12.30	-577.76	430.48	-
1.032e+05												
5	183	9.716e+04	0.0	-0.08	0.0	0.0	1681.59	2776.08	-12.75	601.04	0.0	0.0
		0.0	-446.16	0.06	0.0	17.5	1686.73	2776.08	-12.75	601.04	-223.08	
4.858e+04												
						35.0	1691.86	2776.08	-12.75	601.04	-446.16	
9.716e+04												
5	197	0.0	0.0	-6.55e-03	0.0	0.0	-360.89	-169.01	-74.97	3269.54	0.0	0.0
		-5915.44	-2623.86	0.47	0.0	17.5	-355.75	-169.01	-74.97	3269.54	-1311.93	-
2957.72												
						35.0	-350.61	-169.01	-74.97	3269.54	-2623.86	-
5915.44												
5	200	0.0	2608.18	-0.01	0.0	0.0	-241.42	-4.24	74.52	-3246.27	0.0	0.0
		-148.53	0.0	-0.47	0.0	17.5	-236.28	-4.24	74.52	-3246.27	1304.09	-
74.26												
						35.0	-231.15	-4.24	74.52	-3246.27	2608.18	-
148.53												
5	214	0.0	189.47	0.03	0.0	0.0	-1205.75	-1392.72	5.41	-253.05	0.0	0.0
		-4.875e+04	0.0	-0.02	0.0	17.5	-1200.61	-1392.72	5.41	-253.05	94.73	-
2.437e+04												
						35.0	-1195.48	-1392.72	5.41	-253.05	189.47	-
4.875e+04												
5	215	4.268e+04	0.0	-0.04	0.0	0.0	603.44	1219.46	-5.86	276.32	0.0	0.0
		0.0	-205.15	0.03	0.0	17.5	608.58	1219.46	-5.86	276.32	-102.57	
2.134e+04												
						35.0	613.72	1219.46	-5.86	276.32	-205.15	
4.268e+04												
5	229	0.0	0.0	-6.92e-03	0.0	0.0	-348.54	-151.93	-60.44	2636.19	0.0	0.0
		-5317.50	-2115.30	0.38	0.0	17.5	-343.40	-151.93	-60.44	2636.19	-1057.65	-
2658.75												
						35.0	-338.26	-151.93	-60.44	2636.19	-2115.30	-
5317.50												
5	232	0.0	2099.62	-9.71e-03	0.0	0.0	-253.77	-21.33	59.99	-2612.92	0.0	0.0
		-746.46	0.0	-0.38	0.0	17.5	-248.64	-21.33	59.99	-2612.92	1049.81	-
373.23												
						35.0	-243.50	-21.33	59.99	-2612.92	2099.62	-
746.46												
5	246	0.0	151.47	0.02	0.0	0.0	-1032.76	-1142.96	4.33	-202.02	0.0	0.0
		-4.000e+04	0.0	-0.02	0.0	17.5	-1027.62	-1142.96	4.33	-202.02	75.73	-
2.000e+04												
						35.0	-1022.48	-1142.96	4.33	-202.02	151.47	-
4.000e+04												
5	247	3.394e+04	0.0	-0.04	0.0	0.0	430.45	969.70	-4.78	225.30	0.0	0.0
		0.0	-167.15	0.02	0.0	17.5	435.59	969.70	-4.78	225.30	-83.57	
1.697e+04												
						35.0	440.73	969.70	-4.78	225.30	-167.15	
3.394e+04												
5	259	0.0	34.28	2.08e-03	0.0	0.0	-125.78	-89.48	0.98	-42.20	0.0	0.0
		-3131.73	0.0	-8.56e-03	0.0	17.5	-120.65	-89.48	0.98	-42.20	17.14	-
1565.87												
						35.0	-115.51	-89.48	0.98	-42.20	34.28	-
3131.73												
5	275	0.0	0.0	-9.59e-03	0.0	0.0	-456.90	-166.54	-11.33	381.09	0.0	0.0
		-5829.05	-324.46	0.07	4.11	17.5	-451.77	-166.54	-9.27	381.09	-180.22	-
2914.53												

Viale Duca Alessandro n. 11 – 43123 Parma
Cell. 335 1403156 – E mail ing.concari@gmail.com
Sito web: studioaire.it – P.IVA 02561480340

						35.0	-446.63	-166.54	-7.21	381.09	-324.46	-
5829.05												
5	289	0.0	0.0	-0.01	0.0	0.0	-329.00	-72.76	-20.33	695.98	0.0	0.0
		-2546.45	-591.67	0.12	6.85	17.5	-323.87	-72.76	-16.90	695.98	-325.82	-
1273.22												
						35.0	-318.73	-72.76	-13.48	695.98	-591.67	-
2546.45												
5	317	2.634e+04	0.0	-0.02	-6.85	0.0	424.63	756.09	-3.38	148.55	0.0	0.0
		0.0	-118.17	0.03	0.0	17.5	429.76	752.66	-3.38	148.55	-59.08	
1.320e+04												
						35.0	434.90	749.24	-3.38	148.55	-118.17	
2.634e+04												
5	325	0.0	0.0	-2.32e-03	0.0	0.0	-99.80	-30.62	-0.10	4.74	0.0	0.0
		-1071.74	-3.41	1.12e-03	0.0	17.5	-94.67	-30.62	-0.10	4.74	-1.71	-
535.87												
						35.0	-89.53	-30.62	-0.10	4.74	-3.41	-
1071.74												
5	327	0.0	0.0	-8.31e-03	0.0	0.0	-301.15	-86.63	-0.22	11.64	0.0	0.0
		-3031.98	-7.84	2.66e-03	0.0	17.5	-296.02	-86.63	-0.22	11.64	-3.92	-
1515.99												
						35.0	-290.88	-86.63	-0.22	11.64	-7.84	-
3031.98												
5	331	0.0	0.0	-9.31e-03	0.0	0.0	-334.71	-95.96	-0.25	12.79	0.0	0.0
		-3358.69	-8.58	2.91e-03	0.0	17.5	-329.57	-95.96	-0.25	12.79	-4.29	-
1679.34												
						35.0	-324.44	-95.96	-0.25	12.79	-8.58	-
3358.69												
5	335	0.0	15.44	-1.22e-04	0.0	0.0	-112.79	-60.05	0.44	-18.73	0.0	0.0
		-2101.74	0.0	-3.72e-03	0.0	17.5	-107.66	-60.05	0.44	-18.73	7.72	-
1050.87												
						35.0	-102.52	-60.05	0.44	-18.73	15.44	-
2101.74												
5	339	0.0	11.01	-6.11e-03	0.0	0.0	-314.14	-116.06	0.31	-11.83	0.0	0.0
		-4061.98	0.0	-2.18e-03	0.0	17.5	-309.01	-116.06	0.31	-11.83	5.50	-
2030.99												
						35.0	-303.87	-116.06	0.31	-11.83	11.01	-
4061.98												
5	347	0.0	0.0	-8.29e-03	0.0	0.0	-303.13	-89.05	-4.11	142.64	0.0	0.0
		-3116.73	-119.94	0.03	1.37	17.5	-297.99	-89.05	-3.43	142.64	-65.96	-
1558.37												
						35.0	-292.85	-89.05	-2.74	142.64	-119.94	-
3116.73												
5	349	4164.04	0.0	-6.17e-03	-1.37	0.0	1.96	119.66	-0.62	27.87	0.0	0.0
		0.0	-21.84	5.80e-03	0.0	17.5	7.10	118.97	-0.62	27.87	-10.92	
2088.02												
						35.0	12.24	118.29	-0.62	27.87	-21.84	
4164.04												
16	25	2.061e+04	-462.27	0.02	0.0	0.0	-669.21	151.42	9.22	-2.55	-3745.94	-
3.330e+04												
		-3.330e+04	-3745.94	0.02	0.0	178.0	-594.03	151.42	9.22	-2.55	-2104.11	-
6345.21												
						356.0	-518.86	151.42	9.22	-2.55	-462.27	
2.061e+04												
16	45	1.249e+05	-619.33	-0.19	-57.03	0.0	-3335.86	653.53	-5.97	5.68	-619.33	-
9.758e+04												
		-9.758e+04	-2743.42	-0.08	0.0	178.0	-3238.13	625.02	-5.97	5.68	-1681.37	
1.621e+04												
						356.0	-3140.41	596.50	-5.97	5.68	-2743.42	
1.249e+05												
16	47	1.207e+05	4012.92	-0.20	-57.03	0.0	-3346.50	565.35	-19.14	14.14	4012.92	-
7.039e+04												
		-7.039e+04	-2799.98	-0.13	0.0	178.0	-3248.77	536.84	-19.14	14.14	606.47	
2.771e+04												
						356.0	-3151.04	508.32	-19.14	14.14	-2799.98	
1.207e+05												
16	77	1.182e+05	19.31	-0.27	-95.05	0.0	-2760.03	659.16	-5.99	-11.43	19.31	-
9.954e+04												
		-9.954e+04	-2114.60	-0.01	0.0	178.0	-2662.30	611.63	-5.99	-11.43	-1047.65	
1.356e+04												
						356.0	-2564.58	564.11	-5.99	-11.43	-2114.60	
1.182e+05												
16	147	2.352e+04	8750.44	-0.02	0.0	0.0	-835.02	91.66	24.51	57.42	7626.68	-
9109.22												
		-9109.22	-567.71	-0.24	-95.05	178.0	-759.84	91.66	-23.02	57.42	7759.30	
7206.62												
						356.0	-684.67	91.66	-70.54	57.42	-567.71	
2.352e+04												
16	153	2.244e+05	3.284e+04	-0.79	0.0	0.0	-2974.41	1195.26	-96.58	-175.79	3.284e+04	-
2.015e+05												
		-2.015e+05	-1967.41	0.40	0.0	178.0	-2899.23	1195.26	-96.58	-175.79	1.544e+04	
1.144e+04												
						356.0	-2824.06	1195.26	-96.58	-175.79	-1967.41	
2.244e+05												
16	156	1.432e+05	-735.65	0.77	0.0	0.0	-215.35	-763.70	87.43	201.18	-3.229e+04	
1.432e+05												
		-1.291e+05	-3.229e+04	-0.55	0.0	178.0	-140.18	-763.70	87.43	201.18	-1.651e+04	
7014.44												
						356.0	-65.00	-763.70	87.43	201.18	-735.65	-
1.291e+05												
16	173	1.580e+05	4.515e+04	0.11	0.0	0.0	-2544.79	830.42	-131.39	184.89	4.515e+04	-
1.389e+05												
		-1.389e+05	-2130.86	-0.44	0.0	178.0	-2469.62	830.42	-131.39	184.89	2.151e+04	

Viale Duca Alessandro n. 11 – 43123 Parma
Cell. 335 1403156 – E mail ing.concari@gmail.com
Sito web: studioaire.it – P.IVA 02561480340

9539.82												
						356.0	-2394.44	830.42	-131.39	184.89	-2130.86	
1.580e+05												
16	176	8.052e+04	-572.21	-0.13	0.0	0.0	-644.97	-398.86	122.24	-159.50	-4.459e+04	
8.052e+04												
		-6.268e+04	-4.459e+04	0.30	0.0	178.0	-569.79	-398.86	122.24	-159.50	-2.258e+04	
8918.08												
						356.0	-494.62	-398.86	122.24	-159.50	-572.21	-
6.268e+04												
16	185	1.252e+05	1.517e+04	-0.35	0.0	0.0	-2200.34	645.69	-46.65	-69.92	1.517e+04	-
1.048e+05												
		-1.048e+05	-1622.43	0.13	0.0	178.0	-2125.16	645.69	-46.65	-69.92	6774.37	
1.019e+04												
						356.0	-2049.99	645.69	-46.65	-69.92	-1622.43	
1.252e+05												
16	188	4.649e+04	-1080.63	0.33	0.0	0.0	-989.42	-214.13	37.50	95.31	-1.462e+04	
4.649e+04												
		-2.996e+04	-1.462e+04	-0.28	0.0	178.0	-914.25	-214.13	37.50	95.31	-7848.80	
8263.85												
						356.0	-839.07	-214.13	37.50	95.31	-1080.63	-
2.996e+04												
16	205	9.609e+04	2.098e+04	0.04	0.0	0.0	-2011.81	485.59	-63.06	89.16	2.098e+04	-
7.736e+04												
		-7.736e+04	-1694.03	-0.23	0.0	178.0	-1936.64	485.59	-63.06	89.16	9642.18	
9365.56												
						356.0	-1861.46	485.59	-63.06	89.16	-1694.03	
9.609e+04												
16	208	1.900e+04	-1009.04	-0.06	0.0	0.0	-1177.95	-54.03	53.91	-63.76	-2.042e+04	
1.900e+04												
		-817.48	-2.042e+04	0.11	0.0	178.0	-1102.77	-54.03	53.91	-63.76	-1.072e+04	
9092.33												
						356.0	-1027.60	-54.03	53.91	-63.76	-1009.04	-
817.48												
16	217	1.101e+05	1.239e+04	-0.29	0.0	0.0	-2082.62	562.11	-38.78	-53.83	1.239e+04	-
9.014e+04												
		-9.014e+04	-1569.87	0.09	0.0	178.0	-2007.44	562.11	-38.78	-53.83	5408.80	
1.001e+04												
						356.0	-1932.27	562.11	-38.78	-53.83	-1569.87	
1.101e+05												
16	220	3.178e+04	-1133.19	0.27	0.0	0.0	-1107.14	-130.55	29.63	79.23	-1.183e+04	
3.178e+04												
		-1.487e+04	-1.183e+04	-0.24	0.0	178.0	-1031.97	-130.55	29.63	79.23	-6483.22	
8452.82												
						356.0	-956.79	-130.55	29.63	79.23	-1133.19	-
1.487e+04												
16	237	8.668e+04	1.714e+04	0.03	0.0	0.0	-1930.75	433.14	-52.21	74.46	1.714e+04	-
6.800e+04												
		-6.800e+04	-1627.52	-0.20	0.0	178.0	-1855.58	433.14	-52.21	74.46	7755.96	
9339.11												
						356.0	-1780.40	433.14	-52.21	74.46	-1627.52	
8.668e+04												
16	240	9640.95	-1075.54	-0.06	0.0	0.0	-1259.01	-1.58	43.06	-49.06	-1.659e+04	
9640.95												
		8596.62	-1.659e+04	0.08	0.0	178.0	-1183.83	-1.58	43.06	-49.06	-8830.39	
9118.79												
						356.0	-1108.66	-1.58	43.06	-49.06	-1075.54	
8596.62												
16	257	1.944e+04	-477.98	0.01	0.0	0.0	-672.16	126.93	5.57	-0.20	-2459.21	-
2.574e+04												
		-2.574e+04	-2459.21	8.52e-03	0.0	178.0	-596.99	126.93	5.57	-0.20	-1468.60	-
3151.74												
						356.0	-521.81	126.93	5.57	-0.20	-477.98	
1.944e+04												
16	273	8.557e+04	-397.65	-0.13	-38.02	0.0	-2314.32	446.08	-4.21	4.39	-397.65	-
6.647e+04												
		-6.647e+04	-1896.87	-0.06	0.0	178.0	-2239.14	427.07	-4.21	4.39	-1147.26	
1.124e+04												
						356.0	-2163.97	408.06	-4.21	4.39	-1896.87	
8.557e+04												
16	275	8.277e+04	2690.52	-0.14	-38.02	0.0	-2321.41	387.29	-12.99	10.03	2690.52	-
4.834e+04												
		-4.834e+04	-1934.58	-0.09	0.0	178.0	-2246.23	368.28	-12.99	10.03	377.97	
1.890e+04												
						356.0	-2171.06	349.27	-12.99	10.03	-1934.58	
8.277e+04												
16	289	8.108e+04	28.11	-0.18	-63.37	0.0	-1930.43	449.83	-4.23	-7.02	28.11	-
6.778e+04												
		-6.778e+04	-1477.65	-0.01	0.0	178.0	-1855.26	418.15	-4.23	-7.02	-724.77	
9474.54												
						356.0	-1780.08	386.46	-4.23	-7.02	-1477.65	
8.108e+04												
16	319	2.138e+04	5819.74	-0.02	0.0	0.0	-782.70	87.09	15.75	39.78	5122.54	-
9618.74												
		-9618.74	-548.28	-0.17	-63.37	178.0	-707.53	87.09	-15.93	39.78	5107.01	
5882.81												
						356.0	-632.35	87.09	-47.61	39.78	-548.28	
2.138e+04												
16	325	1.711e+04	114.26	-0.01	0.0	0.0	-678.07	77.94	-1.75	4.50	114.26	-
1.064e+04												
		-1.064e+04	-509.41	-0.03	0.0	178.0	-602.90	77.94	-1.75	4.50	-197.57	
3235.21												
						356.0	-527.72	77.94	-1.75	4.50	-509.41	

Viale Duca Alessandro n. 11 – 43123 Parma
Cell. 335 1403156 – E mail ing.concari@gmail.com
Sito web: studioaire.it – P.IVA 02561480340

1.711e+04												
16	327	4.764e+04	277.11	-0.03	0.0	0.0	-1594.88	215.78	-4.57	12.70	277.11	-
2.918e+04												
		-2.918e+04	-1351.53	-0.07	0.0	178.0	-1519.71	215.78	-4.57	12.70	-537.21	
9228.95												
						356.0	-1444.53	215.78	-4.57	12.70	-1351.53	
4.764e+04												
16	331	5.273e+04	304.25	-0.04	0.0	0.0	-1747.68	238.76	-5.05	14.07	304.25	-
3.227e+04												
		-3.227e+04	-1491.89	-0.08	0.0	178.0	-1672.51	238.76	-5.05	14.07	-593.82	
1.023e+04												
						356.0	-1597.33	238.76	-5.05	14.07	-1491.89	
5.273e+04												
16	333	1.827e+04	-493.70	-6.36e-03	0.0	0.0	-675.12	102.43	1.91	2.15	-1172.47	-
1.819e+04												
		-1.819e+04	-1172.47	-0.01	0.0	178.0	-599.94	102.43	1.91	2.15	-833.08	
41.73												
						356.0	-524.77	102.43	1.91	2.15	-493.70	
1.827e+04												
16	337	4.880e+04	-1009.63	-0.03	0.0	0.0	-1591.93	240.28	-0.92	10.35	-1009.63	-
3.673e+04												
		-3.673e+04	-1335.82	-0.06	0.0	178.0	-1516.75	240.28	-0.92	10.35	-1172.72	
6035.47												
						356.0	-1441.58	240.28	-0.92	10.35	-1335.82	
4.880e+04												
16	339	4.647e+04	1563.84	-0.04	0.0	0.0	-1597.83	191.29	-8.23	15.05	1563.84	-
2.163e+04												
		-2.163e+04	-1367.24	-0.09	0.0	178.0	-1522.66	191.29	-8.23	15.05	98.30	
1.242e+04												
						356.0	-1447.49	191.29	-8.23	15.05	-1367.24	
4.647e+04												
16	347	5.303e+04	530.70	-0.06	-12.67	0.0	-1632.14	252.12	-5.29	9.05	530.70	-
3.447e+04												
		-3.447e+04	-1352.46	-0.06	0.0	178.0	-1556.96	245.78	-5.29	9.05	-410.88	
9844.71												
						356.0	-1481.79	239.44	-5.29	9.05	-1352.46	
5.303e+04												
17	25	6.902e+04	1.138e+04	0.06	0.0	0.0	-1394.46	-633.27	-95.61	33.08	1.138e+04	
6.902e+04												
		-3.490e+04	-4309.38	0.03	0.0	82.0	-1359.81	-633.27	-95.61	33.08	3535.70	
1.706e+04												
						164.1	-1325.16	-633.27	-95.61	33.08	-4309.38	-
3.490e+04												
17	63	7.346e+04	4968.14	-0.10	-26.29	0.0	-5930.73	1234.69	162.11	-41.79	-2.163e+04	-
1.270e+05												
		-1.270e+05	-2.163e+04	-0.06	0.0	82.0	-5885.68	1221.55	162.11	-41.79	-8333.37	-
2.623e+04												
						164.1	-5840.63	1208.40	162.11	-41.79	4968.14	
7.346e+04												
17	65	2.719e+04	1.327e+04	0.02	-26.29	0.0	-1835.23	-286.83	-100.46	23.83	1.327e+04	
2.719e+04												
		-2.204e+04	-3215.90	0.04	0.0	82.0	-1800.58	-299.98	-100.46	23.83	5026.68	
3116.34												
						164.1	-1765.93	-313.12	-100.46	23.83	-3215.90	-
2.204e+04												
17	103	6.373e+04	5650.31	-0.04	0.0	0.0	-7504.44	790.80	319.30	6.00	-4.459e+04	-
6.604e+04												
		-6.604e+04	-4.459e+04	-0.13	-26.29	82.0	-7459.39	790.80	306.15	6.00	-1.893e+04	-
1155.62												
						164.1	-7414.34	790.80	293.01	6.00	5650.31	
6.373e+04												
17	119	7.347e+04	7390.34	-0.06	0.0	0.0	-5972.11	1003.33	344.34	-7.19	-4.696e+04	-
9.117e+04												
		-9.117e+04	-4.696e+04	-0.14	-26.29	82.0	-5927.06	1003.33	331.20	-7.19	-1.925e+04	-
8848.58												
						164.1	-5882.02	1003.33	318.05	-7.19	7390.34	
7.347e+04												
17	143	6.614e+04	8059.46	-0.04	0.0	0.0	-6280.97	806.97	419.33	22.86	-5.716e+04	-
6.628e+04												
		-6.628e+04	-5.716e+04	-0.17	-43.81	82.0	-6235.92	806.97	397.43	22.86	-2.365e+04	-
70.75												
						164.1	-6190.87	806.97	375.52	22.86	8059.46	
6.614e+04												
17	153	6.292e+04	3.402e+04	-0.15	0.0	0.0	-6755.90	1472.79	718.81	-78.32	3.402e+04	-
1.887e+05												
		-1.887e+05	3.257e+04	0.11	0.0	82.0	-6721.24	1472.79	718.81	-78.32	3.330e+04	-
6.288e+04												
						164.1	-6686.59	1472.79	718.81	-78.32	3.257e+04	
6.292e+04												
17	156	1.722e+05	-3.299e+04	0.14	0.0	0.0	-215.71	-1212.45	-645.15	78.82	-4.653e+04	
1.722e+05												
		-3.664e+04	-4.653e+04	-0.15	0.0	82.0	-181.06	-1212.45	-645.15	78.82	-3.976e+04	
6.780e+04												
						164.1	-146.41	-1212.45	-645.15	78.82	-3.299e+04	-
3.664e+04												
17	157	6.566e+04	4.112e+04	-0.18	0.0	0.0	-6806.83	1458.50	646.03	-95.91	4.112e+04	-
1.802e+05												
		-1.802e+05	2.767e+04	0.12	0.0	82.0	-6772.18	1458.50	646.03	-95.91	3.440e+04	-
5.729e+04												
						164.1	-6737.52	1458.50	646.03	-95.91	2.767e+04	
6.566e+04												
17	160	1.638e+05	-2.809e+04	0.18	0.0	0.0	-164.78	-1198.16	-572.37	96.41	-5.363e+04	

Viale Duca Alessandro n. 11 – 43123 Parma
Cell. 335 1403156 – E mail ing.concari@gmail.com
Sito web: studioaire.it – P.IVA 02561480340

1.638e+05												
		-3.938e+04	-5.363e+04	-0.16	0.0	82.0	-130.12	-1198.16	-572.37	96.41	-4.086e+04	
6.221e+04												
						164.1	-95.47	-1198.16	-572.37	96.41	-2.809e+04	-
3.938e+04												
17	174	1.563e+04	1.029e+05	-0.12	0.0	0.0	-2340.19	-132.19	-813.75	-184.13	1.029e+05	
1.563e+04												
		-2.262e+04	-3.051e+04	0.29	0.0	82.0	-2305.54	-132.19	-813.75	-184.13	3.621e+04	-
3491.82												
						164.1	-2270.89	-132.19	-813.75	-184.13	-3.051e+04	-
2.262e+04												
17	175	4.890e+04	3.009e+04	0.12	0.0	0.0	-4631.41	392.53	887.40	184.63	-1.154e+05	-
3.207e+04												
		-3.207e+04	-1.154e+05	-0.33	0.0	82.0	-4596.76	392.53	887.40	184.63	-4.267e+04	
8410.71												
						164.1	-4562.11	392.53	887.40	184.63	3.009e+04	
4.890e+04												
17	185	3.555e+04	1.480e+04	-0.07	0.0	0.0	-4927.99	722.10	346.64	-34.35	1.122e+04	-
8.758e+04												
		-8.758e+04	1.122e+04	0.04	0.0	82.0	-4893.34	722.10	346.64	-34.35	1.301e+04	-
2.601e+04												
						164.1	-4858.69	722.10	346.64	-34.35	1.480e+04	
3.555e+04												
17	188	7.114e+04	-1.522e+04	0.06	0.0	0.0	-2043.61	-461.76	-272.98	34.86	-2.373e+04	
7.114e+04												
		-9272.79	-2.373e+04	-0.08	0.0	82.0	-2008.96	-461.76	-272.98	34.86	-1.947e+04	
3.093e+04												
						164.1	-1974.31	-461.76	-272.98	34.86	-1.522e+04	-
9272.79												
17	189	3.678e+04	1.449e+04	-0.08	0.0	0.0	-4952.02	716.67	312.83	-42.32	1.449e+04	-
8.390e+04												
		-8.390e+04	1.252e+04	0.04	0.0	82.0	-4917.37	716.67	312.83	-42.32	1.350e+04	-
2.356e+04												
						164.1	-4882.71	716.67	312.83	-42.32	1.252e+04	
3.678e+04												
17	192	6.746e+04	-1.294e+04	0.08	0.0	0.0	-2019.59	-456.33	-239.18	42.82	-2.700e+04	
6.746e+04												
		-1.050e+04	-2.700e+04	-0.08	0.0	82.0	-1984.94	-456.33	-239.18	42.82	-1.997e+04	
2.848e+04												
						164.1	-1950.28	-456.33	-239.18	42.82	-1.294e+04	-
1.050e+04												
17	206	2400.61	4.377e+04	-0.06	0.0	0.0	-2961.36	12.27	-357.27	-83.85	4.377e+04	
2400.61												
		-3402.10	-1.431e+04	0.12	0.0	82.0	-2926.71	12.27	-357.27	-83.85	1.473e+04	-
500.74												
						164.1	-2892.06	12.27	-357.27	-83.85	-1.431e+04	-
3402.10												
17	207	2.968e+04	1.389e+04	0.05	0.0	0.0	-4010.25	248.07	430.93	84.35	-5.628e+04	-
1.884e+04												
		-1.884e+04	-5.628e+04	-0.16	0.0	82.0	-3975.59	248.07	430.93	84.35	-2.119e+04	
5419.64												
						164.1	-3940.94	248.07	430.93	84.35	1.389e+04	
2.968e+04												
17	217	3.130e+04	1.200e+04	-0.05	0.0	0.0	-4648.88	607.53	288.35	-27.65	7788.96	-
7.218e+04												
		-7.218e+04	7788.96	0.02	0.0	82.0	-4614.23	607.53	288.35	-27.65	9894.24	-
2.044e+04												
						164.1	-4579.58	607.53	288.35	-27.65	1.200e+04	
3.130e+04												
17	220	5.574e+04	-1.242e+04	0.05	0.0	0.0	-2322.72	-347.19	-214.69	28.16	-2.030e+04	
5.574e+04												
		-5022.36	-2.030e+04	-0.07	0.0	82.0	-2288.07	-347.19	-214.69	28.16	-1.636e+04	
2.536e+04												
						164.1	-2253.42	-347.19	-214.69	28.16	-1.242e+04	-
5022.36												
17	221	3.227e+04	1.049e+04	-0.06	0.0	0.0	-4667.65	603.15	260.50	-34.15	1.049e+04	-
6.922e+04												
		-6.922e+04	1.013e+04	0.03	0.0	82.0	-4632.99	603.15	260.50	-34.15	1.031e+04	-
1.847e+04												
						164.1	-4598.34	603.15	260.50	-34.15	1.013e+04	
3.227e+04												
17	224	5.277e+04	-1.055e+04	0.06	0.0	0.0	-2303.96	-342.81	-186.84	34.65	-2.299e+04	
5.277e+04												
		-5987.67	-2.299e+04	-0.07	0.0	82.0	-2269.31	-342.81	-186.84	34.65	-1.677e+04	
2.339e+04												
						164.1	-2234.65	-342.81	-186.84	34.65	-1.055e+04	-
5987.67												
17	238	364.87	3.444e+04	-0.04	0.0	0.0	-3059.30	34.67	-284.46	-68.08	3.444e+04	
364.87												
		-342.04	-1.172e+04	0.09	0.0	82.0	-3024.65	34.67	-284.46	-68.08	1.136e+04	
11.41												
						164.1	-2990.00	34.67	-284.46	-68.08	-1.172e+04	-
342.04												
17	239	2.662e+04	1.130e+04	0.04	0.0	0.0	-3912.30	225.67	358.12	68.59	-4.694e+04	-
1.681e+04												
		-1.681e+04	-4.694e+04	-0.14	0.0	82.0	-3877.65	225.67	358.12	68.59	-1.782e+04	
4907.48												
						164.1	-3843.00	225.67	358.12	68.59	1.130e+04	
2.662e+04												
17	257	4.494e+04	6860.44	0.04	0.0	0.0	-1404.95	-405.70	-59.56	22.12	6860.44	
4.494e+04												
		-2.163e+04	-2913.82	0.02	0.0	82.0	-1370.30	-405.70	-59.56	22.12	1973.31	

Viale Duca Alessandro n. 11 – 43123 Parma
Cell. 335 1403156 – E mail ing.concari@gmail.com
Sito web: studioaire.it – P.IVA 02561480340

1.166e+04												
						164.1	-1335.64	-405.70	-59.56	22.12	-2913.82	-
2.163e+04												
17	277	1.706e+04	8119.42	0.01	-17.53	0.0	-1698.80	-174.74	-62.79	15.95	8119.42	
1.706e+04												
		-1.306e+04	-2184.83	0.02	0.0	82.0	-1664.14	-183.51	-62.79	15.95	2967.29	
2360.25												
						164.1	-1629.49	-192.27	-62.79	15.95	-2184.83	-
1.306e+04												
17	283	4.963e+04	3295.73	-0.07	-17.53	0.0	-4143.94	829.72	109.75	-27.83	-1.471e+04	-
8.509e+04												
		-8.509e+04	-1.471e+04	-0.04	0.0	82.0	-4109.29	820.96	109.75	-27.83	-5709.11	-
1.737e+04												
						164.1	-4074.64	812.19	109.75	-27.83	3295.73	
4.963e+04												
17	303	4.314e+04	3750.52	-0.03	0.0	0.0	-5193.08	533.79	214.54	4.03	-3.002e+04	-
4.445e+04												
		-4.445e+04	-3.002e+04	-0.09	-17.53	82.0	-5158.43	533.79	205.77	4.03	-1.277e+04	-
657.33												
						164.1	-5123.78	533.79	197.01	4.03	3750.52	
4.314e+04												
17	311	4.964e+04	4910.53	-0.04	0.0	0.0	-4171.53	675.48	231.23	-4.77	-3.160e+04	-
6.121e+04												
		-6.121e+04	-3.160e+04	-0.09	-17.53	82.0	-4136.88	675.48	222.47	-4.77	-1.298e+04	-
5785.97												
						164.1	-4102.23	675.48	213.71	-4.77	4910.53	
4.964e+04												
17	323	4.475e+04	5356.61	-0.03	0.0	0.0	-4377.43	544.57	281.23	15.27	-3.840e+04	-
4.462e+04												
		-4.462e+04	-3.840e+04	-0.11	-29.21	82.0	-4342.78	544.57	266.62	15.27	-1.592e+04	
65.91												
						164.1	-4308.13	544.57	252.02	15.27	5356.61	
4.475e+04												
17	325	4904.36	-122.70	-1.15e-03	0.0	0.0	-1425.92	49.44	12.54	0.20	-2180.26	-
3208.22												
		-3208.22	-2180.26	-7.17e-03	0.0	82.0	-1391.27	49.44	12.54	0.20	-1151.48	
848.07												
						164.1	-1356.62	49.44	12.54	0.20	-122.70	
4904.36												
17	327	1.314e+04	-209.85	-2.81e-03	0.0	0.0	-3485.80	130.17	36.83	0.25	-6253.39	-
8221.00												
		-8221.00	-6253.39	-0.02	0.0	82.0	-3451.15	130.17	36.83	0.25	-3231.62	
2459.45												
						164.1	-3416.50	130.17	36.83	0.25	-209.85	
1.314e+04												
17	331	1.451e+04	-224.37	-3.08e-03	0.0	0.0	-3829.12	143.63	40.88	0.26	-6932.25	-
9056.46												
		-9056.46	-6932.25	-0.02	0.0	82.0	-3794.46	143.63	40.88	0.26	-3578.31	
2728.01												
						164.1	-3759.81	143.63	40.88	0.26	-224.37	
1.451e+04												
17	333	2.087e+04	2340.09	0.02	0.0	0.0	-1415.44	-178.13	-23.51	11.16	2340.09	
2.087e+04												
		-8363.91	-1518.26	5.06e-03	0.0	82.0	-1380.78	-178.13	-23.51	11.16	410.91	
6251.76												
						164.1	-1346.13	-178.13	-23.51	11.16	-1518.26	-
8363.91												
17	339	2.641e+04	1185.71	-0.02	0.0	0.0	-3496.29	357.74	72.88	-10.71	-1.077e+04	-
3.230e+04												
		-3.230e+04	-1.077e+04	-0.03	0.0	82.0	-3461.64	357.74	72.88	-10.71	-4794.01	-
2944.24												
						164.1	-3426.99	357.74	72.88	-10.71	1185.71	
2.641e+04												
17	351	1.600e+04	571.41	-3.08e-03	0.0	0.0	-3592.95	155.74	76.25	5.88	-1.146e+04	-
9554.77												
		-9554.77	-1.146e+04	-0.04	-5.84	82.0	-3558.30	155.74	73.33	5.88	-5325.12	
3223.91												
						164.1	-3523.65	155.74	70.40	5.88	571.41	
1.600e+04												
46	23	7.877e+04	1.526e+04	0.06	0.0	0.0	-3820.49	-856.78	352.90	23.02	-4.265e+04	
7.877e+04												
		-6.183e+04	-4.265e+04	-0.11	0.0	82.0	-3775.44	-856.78	352.90	23.02	-1.369e+04	
8468.09												
						164.1	-3730.40	-856.78	352.90	23.02	1.526e+04	-
6.183e+04												
46	81	4.047e+04	2.186e+04	-0.10	-43.81	0.0	-510.22	938.25	-200.30	-1.71	2.186e+04	-
1.099e+05												
		-1.099e+05	-1.101e+04	0.05	0.0	82.0	-475.56	916.34	-200.30	-1.71	5426.23	-
3.382e+04												
						164.1	-440.91	894.44	-200.30	-1.71	-1.101e+04	
4.047e+04												
46	83	-5410.72	6279.10	-0.03	-43.81	0.0	-233.33	153.15	180.66	5.88	-2.337e+04	-
2.695e+04												
		-2.695e+04	-2.337e+04	-0.06	0.0	82.0	-198.68	131.25	180.66	5.88	-8544.06	-
1.528e+04												
						164.1	-164.03	109.34	180.66	5.88	6279.10	-
5410.72												
46	101	-2.139e+04	1.698e+04	-0.04	0.0	0.0	-5861.01	2.70	-166.49	34.77	1.698e+04	-
2.183e+04												
		-2.183e+04	-1.250e+04	0.04	-26.29	82.0	-5815.96	2.70	-179.63	34.77	2775.69	-
2.161e+04												
						164.1	-5770.91	2.70	-192.78	34.77	-1.250e+04	-

Viale Duca Alessandro n. 11 – 43123 Parma
Cell. 335 1403156 – E mail ing.concari@gmail.com
Sito web: studioaire.it – P.IVA 02561480340

2.139e+04												
46	119	8.588e+04	1.025e+04	0.06	0.0	0.0	-4371.74	-984.59	329.95	39.85	-4.174e+04	
8.588e+04												
		-7.569e+04	-4.174e+04	-0.12	-26.29	82.0	-4326.69	-984.59	316.80	39.85	-1.521e+04	
5095.83												
						164.1	-4281.64	-984.59	303.66	39.85	1.025e+04	-
7.569e+04												
46	121	1.857e+04	3.764e+04	-0.06	0.0	0.0	-1887.90	477.46	-333.82	14.29	3.764e+04	-
5.979e+04												
		-5.979e+04	-1.930e+04	0.09	-26.29	82.0	-1853.25	477.46	-346.96	14.29	9707.04	-
2.061e+04												
						164.1	-1818.59	477.46	-360.11	14.29	-1.930e+04	
1.857e+04												
46	154	4.084e+04	-9929.48	-0.19	0.0	0.0	752.06	1284.73	-41.70	-114.72	-1.237e+04	-
1.782e+05												
		-1.782e+05	-1.237e+04	-0.03	0.0	82.0	786.71	1284.73	-41.70	-114.72	-1.115e+04	-
6.869e+04												
						164.1	821.36	1284.73	-41.70	-114.72	-9929.48	
4.084e+04												
46	155	1.904e+05	1.097e+04	0.19	0.0	0.0	-5950.79	-1541.39	85.59	135.74	6203.36	
1.904e+05												
		-7.079e+04	6203.36	7.29e-03	0.0	82.0	-5916.14	-1541.39	85.59	135.74	8585.06	
5.979e+04												
						164.1	-5881.49	-1541.39	85.59	135.74	1.097e+04	-
7.079e+04												
46	158	4.075e+04	-1.146e+04	-0.16	0.0	0.0	769.40	1231.15	-53.95	-107.66	-1.175e+04	-
1.678e+05												
		-1.678e+05	-1.175e+04	-0.03	0.0	82.0	804.05	1231.15	-53.95	-107.66	-1.160e+04	-
6.353e+04												
						164.1	838.70	1231.15	-53.95	-107.66	-1.146e+04	
4.075e+04												
46	159	1.800e+05	1.249e+04	0.16	0.0	0.0	-5968.13	-1487.81	97.84	128.68	5582.41	
1.800e+05												
		-7.071e+04	5582.41	9.99e-03	0.0	82.0	-5933.48	-1487.81	97.84	128.68	9038.05	
5.463e+04												
						164.1	-5898.83	-1487.81	97.84	128.68	1.249e+04	-
7.071e+04												
46	173	4.444e+04	9007.94	0.03	0.0	0.0	-4314.69	-650.71	-311.28	71.71	9007.94	
4.444e+04												
		-7.059e+04	-3.861e+04	-0.04	0.0	82.0	-4280.04	-650.71	-311.28	71.71	-1.480e+04	-
1.307e+04												
						164.1	-4245.38	-650.71	-311.28	71.71	-3.861e+04	-
7.059e+04												
46	176	4.063e+04	3.965e+04	-0.03	0.0	0.0	-884.05	394.05	355.17	-50.69	-1.517e+04	-
3.228e+04												
		-3.228e+04	-1.517e+04	0.02	0.0	82.0	-849.39	394.05	355.17	-50.69	1.224e+04	
4176.98												
						164.1	-814.74	394.05	355.17	-50.69	3.965e+04	
4.063e+04												
46	186	1.030e+04	-3894.01	-0.09	0.0	0.0	-1110.23	499.12	-4.38	-45.45	-7321.68	-
7.528e+04												
		-7.528e+04	-7321.68	-0.02	0.0	82.0	-1075.58	499.12	-4.38	-45.45	-5607.85	-
3.249e+04												
						164.1	-1040.93	499.12	-4.38	-45.45	-3894.01	
1.030e+04												
46	187	8.744e+04	4931.30	0.08	0.0	0.0	-4088.50	-755.78	48.27	66.47	1156.74	
8.744e+04												
		-4.025e+04	1156.74	-4.73e-03	0.0	82.0	-4053.85	-755.78	48.27	66.47	3044.02	
2.359e+04												
						164.1	-4019.20	-755.78	48.27	66.47	4931.30	-
4.025e+04												
46	190	1.018e+04	-4555.82	-0.07	0.0	0.0	-1102.61	475.21	-9.84	-42.20	-7028.85	-
7.076e+04												
		-7.076e+04	-7028.85	-0.02	0.0	82.0	-1067.96	475.21	-9.84	-42.20	-5792.34	-
3.029e+04												
						164.1	-1033.31	475.21	-9.84	-42.20	-4555.82	
1.018e+04												
46	191	8.292e+04	5593.11	0.07	0.0	0.0	-4096.12	-731.87	53.73	63.22	863.91	
8.292e+04												
		-4.014e+04	863.91	-4.26e-03	0.0	82.0	-4061.47	-731.87	53.73	63.22	3228.51	
2.139e+04												
						164.1	-4026.81	-731.87	53.73	63.22	5593.11	-
4.014e+04												
46	205	2.415e+04	2575.48	0.01	0.0	0.0	-3413.02	-376.16	-130.27	39.18	2575.48	
2.415e+04												
		-4.099e+04	-1.725e+04	-0.02	0.0	82.0	-3378.37	-376.16	-130.27	39.18	-7338.19	-
8422.39												
						164.1	-3343.72	-376.16	-130.27	39.18	-1.725e+04	-
4.099e+04												
46	208	1.104e+04	1.829e+04	-0.01	0.0	0.0	-1785.71	119.50	174.16	-18.16	-8740.42	-
1.199e+04												
		-1.199e+04	-8740.42	-5.05e-03	0.0	82.0	-1751.06	119.50	174.16	-18.16	4774.36	-
474.48												
						164.1	-1716.41	119.50	174.16	-18.16	1.829e+04	
1.104e+04												
46	218	5527.04	-3004.24	-0.07	0.0	0.0	-1396.43	378.49	1.04	-34.76	-6527.77	-
5.955e+04												
		-5.955e+04	-6527.77	-0.01	0.0	82.0	-1361.78	378.49	1.04	-34.76	-4766.01	-
2.701e+04												
						164.1	-1327.13	378.49	1.04	-34.76	-3004.24	
5527.04												
46	219	7.171e+04	4041.53	0.07	0.0	0.0	-3802.30	-635.15	42.85	55.78	362.83	

Viale Duca Alessandro n. 11 – 43123 Parma
Cell. 335 1403156 – E mail ing.concari@gmail.com
Sito web: studioaire.it – P.IVA 02561480340

7.171e+04												
		-3.548e+04	362.83	-4.66e-03	0.0	82.0	-3767.65	-635.15	42.85	55.78	2202.18	
1.811e+04												
						164.1	-3733.00	-635.15	42.85	55.78	4041.53	-
3.548e+04												
46	222	5376.84	-3554.40	-0.06	0.0	0.0	-1392.06	358.65	-3.54	-32.07	-6279.82	-
5.587e+04												
		-5.587e+04	-6279.82	-0.02	0.0	82.0	-1357.41	358.65	-3.54	-32.07	-4917.11	-
2.525e+04												
						164.1	-1322.76	358.65	-3.54	-32.07	-3554.40	
5376.84												
46	223	6.804e+04	4591.69	0.05	0.0	0.0	-3806.67	-615.31	47.43	53.10	114.87	
6.804e+04												
		-3.533e+04	114.87	-4.28e-03	0.0	82.0	-3772.02	-615.31	47.43	53.10	2353.28	
1.635e+04												
						164.1	-3737.37	-615.31	47.43	53.10	4591.69	-
3.533e+04												
46	237	2.087e+04	1539.60	0.01	0.0	0.0	-3265.94	-331.38	-101.77	33.94	1539.60	
2.087e+04												
		-3.623e+04	-1.391e+04	-0.02	0.0	82.0	-3231.29	-331.38	-101.77	33.94	-6183.61	-
7681.96												
						164.1	-3196.64	-331.38	-101.77	33.94	-1.391e+04	-
3.623e+04												
46	240	6273.78	1.494e+04	-0.01	0.0	0.0	-1932.79	74.72	145.66	-12.92	-7704.54	-
8703.60												
		-8703.60	-7704.54	-4.94e-03	0.0	82.0	-1898.14	74.72	145.66	-12.92	3619.78	-
1214.91												
						164.1	-1863.49	74.72	145.66	-12.92	1.494e+04	
6273.78												
46	263	5.281e+04	1.019e+04	0.04	0.0	0.0	-2694.45	-577.72	236.15	15.85	-2.856e+04	
5.281e+04												
		-4.200e+04	-2.856e+04	-0.08	0.0	82.0	-2659.80	-577.72	236.15	15.85	-9186.37	
5406.70												
						164.1	-2625.15	-577.72	236.15	15.85	1.019e+04	-
4.200e+04												
46	285	2.504e+04	1.425e+04	-0.07	-29.21	0.0	-708.78	609.17	-131.33	0.12	1.425e+04	-
7.253e+04												
		-7.253e+04	-7299.30	0.03	0.0	82.0	-674.13	594.57	-131.33	0.12	3476.55	-
2.314e+04												
						164.1	-639.48	579.96	-131.33	0.12	-7299.30	
2.504e+04												
46	287	-5543.54	4225.59	-0.02	-29.21	0.0	-524.19	85.78	122.64	5.18	-1.590e+04	-
1.722e+04												
		-1.722e+04	-1.590e+04	-0.04	0.0	82.0	-489.54	71.17	122.64	5.18	-5836.98	-
1.078e+04												
						164.1	-454.89	56.57	122.64	5.18	4225.59	-
5543.54												
46	301	-1.426e+04	1.119e+04	-0.03	0.0	0.0	-4054.79	-4.73	-110.11	23.69	1.119e+04	-
1.426e+04												
		-1.504e+04	-8319.18	0.02	-17.53	82.0	-4020.14	-4.73	-118.88	23.69	1794.08	-
1.465e+04												
						164.1	-3985.49	-4.73	-127.64	23.69	-8319.18	-
1.504e+04												
46	305	1.044e+04	2.477e+04	-0.04	0.0	0.0	-1627.24	301.98	-220.35	10.79	2.477e+04	-
3.911e+04												
		-3.911e+04	-1.283e+04	0.06	-17.53	82.0	-1592.58	301.98	-229.11	10.79	6330.42	-
1.434e+04												
						164.1	-1557.93	301.98	-237.87	10.79	-1.283e+04	
1.044e+04												
46	311	5.755e+04	6847.31	0.04	0.0	0.0	-3061.95	-662.92	220.84	27.07	-2.796e+04	
5.755e+04												
		-5.123e+04	-2.796e+04	-0.08	-17.53	82.0	-3027.30	-662.92	212.08	27.07	-1.019e+04	
3158.53												
						164.1	-2992.64	-662.92	203.32	27.07	6847.31	-
5.123e+04												
46	325	2228.74	118.58	-7.82e-04	0.0	0.0	-1105.92	-48.98	6.60	3.78	-964.21	
2228.74												
		-5809.18	-964.21	-2.90e-03	0.0	82.0	-1071.26	-48.98	6.60	3.78	-422.82	-
1790.22												
						164.1	-1036.61	-48.98	6.60	3.78	118.58	-
5809.18												
46	327	6081.09	518.65	-1.63e-03	0.0	0.0	-2599.37	-128.33	21.94	10.51	-3082.47	
6081.09												
		-1.498e+04	-3082.47	-9.03e-03	0.0	82.0	-2564.71	-128.33	21.94	10.51	-1281.91	-
4448.44												
						164.1	-2530.06	-128.33	21.94	10.51	518.65	-
1.498e+04												
46	331	6723.15	585.32	-1.77e-03	0.0	0.0	-2848.28	-141.56	24.50	11.63	-3435.52	
6723.15												
		-1.651e+04	-3435.52	-0.01	0.0	82.0	-2813.62	-141.56	24.50	11.63	-1425.10	-
4891.47												
						164.1	-2778.97	-141.56	24.50	11.63	585.32	-
1.651e+04												
46	333	6935.41	1.160e+04	-0.02	0.0	0.0	-1182.83	169.10	-99.22	1.67	1.160e+04	-
2.081e+04												
		-2.081e+04	-4683.46	0.03	0.0	82.0	-1148.18	169.10	-99.22	1.67	3457.82	-
6939.30												
						164.1	-1113.52	169.10	-99.22	1.67	-4683.46	
6935.41												
46	339	2.912e+04	5320.68	0.02	0.0	0.0	-2522.45	-346.41	127.77	12.62	-1.565e+04	
2.912e+04												
		-2.772e+04	-1.565e+04	-0.04	0.0	82.0	-2487.80	-346.41	127.77	12.62	-5162.55	

Viale Duca Alessandro n. 11 – 43123 Parma
Cell. 335 1403156 – E mail ing.concari@gmail.com
Sito web: studioaire.it – P.IVA 02561480340

700.65												
						164.1	-2453.15	-346.41	127.77	12.62	5320.68	-
2.772e+04												
46	345	-2697.35	-212.51	-9.75e-03	-5.84	0.0	-1008.03	30.31	4.41	3.56	-936.09	-
7191.79												
		-7191.79	-936.09	-3.33e-03	0.0	82.0	-973.38	27.39	4.41	3.56	-574.30	-
4824.73												
						164.1	-938.73	24.47	4.41	3.56	-212.51	-
2697.35												
47	23	2.005e+04	1.461e+04	0.04	0.0	0.0	-2016.32	-258.60	-38.55	-1.13	1.461e+04	
2.005e+04												
		-7.201e+04	891.06	-0.07	0.0	178.0	-1918.59	-258.60	-38.55	-1.13	7752.98	-
2.598e+04												
						356.0	-1820.86	-258.60	-38.55	-1.13	891.06	-
7.201e+04												
47	81	2.227e+04	441.35	-0.26	-95.05	0.0	-278.65	156.19	31.49	-14.94	-1.077e+04	-
1.642e+04												
		-1.642e+04	-1.077e+04	-0.05	0.0	178.0	-203.47	108.66	31.49	-14.94	-5164.35	
7153.75												
						356.0	-128.30	61.14	31.49	-14.94	441.35	
2.227e+04												
47	101	8.140e+04	1626.51	0.03	0.0	0.0	-2618.03	-538.06	68.18	19.64	-1.249e+04	
8.140e+04												
		-1.101e+05	-1.249e+04	-0.08	-57.03	178.0	-2520.31	-538.06	39.67	19.64	-2896.04	-
1.437e+04												
						356.0	-2422.58	-538.06	11.15	19.64	1626.51	-
1.101e+05												
47	103	5.121e+04	5552.51	0.05	0.0	0.0	-2633.21	-433.64	20.81	2.96	4201.53	
5.121e+04												
		-1.032e+05	1459.43	-0.12	-57.03	178.0	-2535.48	-433.64	-7.70	2.96	5368.36	-
2.598e+04												
						356.0	-2437.75	-433.64	-36.22	2.96	1459.43	-
1.032e+05												
47	121	4.299e+04	521.35	-0.02	0.0	0.0	-631.39	-201.90	83.05	11.37	-1.889e+04	
4.299e+04												
		-2.889e+04	-1.889e+04	-0.04	-57.03	178.0	-556.22	-201.90	54.54	11.37	-6648.35	
7053.44												
						356.0	-481.04	-201.90	26.02	11.37	521.35	-
2.889e+04												
47	154	1.295e+05	1348.11	-1.01	0.0	0.0	42.26	769.94	32.83	-181.36	-1.034e+04	-
1.450e+05												
		-1.450e+05	-1.034e+04	-0.28	0.0	178.0	117.44	769.94	32.83	-181.36	-4497.30	-
7745.68												
						356.0	192.61	769.94	32.83	-181.36	1348.11	
1.295e+05												
47	155	2.020e+05	1.120e+04	0.99	0.0	0.0	-2623.08	-1205.48	-31.64	197.42	1.120e+04	
2.020e+05												
		-2.275e+05	-67.91	0.25	0.0	178.0	-2547.91	-1205.48	-31.64	197.42	5566.12	-
1.278e+04												
						356.0	-2472.73	-1205.48	-31.64	197.42	-67.91	-
2.275e+05												
47	173	5.543e+04	2827.35	0.12	0.0	0.0	-1676.89	-360.16	117.87	120.01	-3.917e+04	
5.543e+04												
		-7.346e+04	-3.917e+04	-0.84	0.0	178.0	-1601.72	-360.16	117.87	120.01	-1.817e+04	-
9016.21												
						356.0	-1526.54	-360.16	117.87	120.01	2827.35	-
7.346e+04												
47	176	1570.76	4.002e+04	-0.13	0.0	0.0	-903.93	-75.38	-116.68	-103.95	4.002e+04	
1570.76												
		-2.459e+04	-1547.15	0.81	0.0	178.0	-828.75	-75.38	-116.68	-103.95	1.924e+04	-
1.151e+04												
						356.0	-753.58	-75.38	-116.68	-103.95	-1547.15	-
2.459e+04												
47	186	2.941e+04	941.94	-0.45	0.0	0.0	-701.05	216.54	14.23	-75.77	-4125.22	-
4.783e+04												
		-4.783e+04	-4125.22	-0.13	0.0	178.0	-625.88	216.54	14.23	-75.77	-1591.64	-
9207.88												
						356.0	-550.70	216.54	14.23	-75.77	941.94	
2.941e+04												
47	187	1.048e+05	4982.66	0.43	0.0	0.0	-1879.77	-652.08	-13.04	91.83	4982.66	
1.048e+05												
		-1.275e+05	338.26	0.10	0.0	178.0	-1804.59	-652.08	-13.04	91.83	2660.46	-
1.132e+04												
						356.0	-1729.42	-652.08	-13.04	91.83	338.26	-
1.275e+05												
47	205	4.095e+04	1630.44	0.06	0.0	0.0	-1474.82	-282.96	53.83	59.12	-1.755e+04	
4.095e+04												
		-6.010e+04	-1.755e+04	-0.39	0.0	178.0	-1399.65	-282.96	53.83	59.12	-7958.50	-
9574.27												
						356.0	-1324.47	-282.96	53.83	59.12	1630.44	-
6.010e+04												
47	208	1.605e+04	1.840e+04	-0.07	0.0	0.0	-1106.00	-152.58	-52.64	-43.06	1.840e+04	
1.605e+04												
		-3.796e+04	-350.25	0.36	0.0	178.0	-1030.82	-152.58	-52.64	-43.06	9027.32	-
1.095e+04												
						356.0	-955.65	-152.58	-52.64	-43.06	-350.25	-
3.796e+04												
47	218	1.418e+04	881.61	-0.37	0.0	0.0	-814.82	132.25	11.48	-59.60	-3207.86	-
3.302e+04												
		-3.302e+04	-3207.86	-0.11	0.0	178.0	-739.64	132.25	11.48	-59.60	-1163.13	-
9422.44												
						356.0	-664.47	132.25	11.48	-59.60	881.61	

Viale Duca Alessandro n. 11 – 43123 Parma
Cell. 335 1403156 – E mail ing.concari@gmail.com
Sito web: studioaire.it – P.IVA 02561480340

1.418e+04												
47	219	9.002e+04	4065.30	0.34	0.0	0.0	-1766.00	-567.79	-10.30	75.66	4065.30	
9.002e+04												
		-1.122e+05	398.59	0.08	0.0	178.0	-1690.83	-567.79	-10.30	75.66	2231.95	-
1.110e+04												
						356.0	-1615.65	-567.79	-10.30	75.66	398.59	-
1.122e+05												
47	237	3.865e+04	1443.50	0.05	0.0	0.0	-1441.69	-270.79	43.81	49.55	-1.416e+04	
3.865e+04												
		-5.801e+04	-1.416e+04	-0.32	0.0	178.0	-1366.51	-270.79	43.81	49.55	-6359.57	-
9681.92												
						356.0	-1291.34	-270.79	43.81	49.55	1443.50	-
5.801e+04												
47	240	1.835e+04	1.502e+04	-0.06	0.0	0.0	-1139.13	-164.75	-42.62	-33.49	1.502e+04	
1.835e+04												
		-4.004e+04	-163.30	0.29	0.0	178.0	-1063.96	-164.75	-42.62	-33.49	7428.39	-
1.085e+04												
						356.0	-988.78	-164.75	-42.62	-33.49	-163.30	-
4.004e+04												
47	263	1.475e+04	9757.67	0.03	0.0	0.0	-1419.63	-182.91	-25.67	-0.37	9757.67	
1.475e+04												
		-5.037e+04	620.67	-0.05	0.0	178.0	-1344.46	-182.91	-25.67	-0.37	5189.17	-
1.781e+04												
						356.0	-1269.28	-182.91	-25.67	-0.37	620.67	-
5.037e+04												
47	285	8937.88	360.81	-0.18	-63.37	0.0	-374.32	77.84	21.08	-9.01	-7144.03	-
7494.88												
		-7494.88	-7144.03	-0.03	0.0	178.0	-299.14	46.16	21.08	-9.01	-3391.61	
3541.38												
						356.0	-223.97	14.48	21.08	-9.01	360.81	
8937.88												
47	301	5.565e+04	1110.97	0.02	0.0	0.0	-1820.78	-369.22	45.49	13.47	-8315.18	
5.565e+04												
		-7.579e+04	-8315.18	-0.06	-38.02	178.0	-1745.60	-369.22	26.48	13.47	-1910.18	-
1.007e+04												
						356.0	-1670.43	-369.22	7.47	13.47	1110.97	-
7.579e+04												
47	303	3.552e+04	3720.66	0.03	0.0	0.0	-1830.89	-299.61	13.91	2.35	2815.42	
3.552e+04												
		-7.114e+04	999.58	-0.08	-38.02	178.0	-1755.72	-299.61	-5.10	2.35	3599.42	-
1.781e+04												
						356.0	-1680.54	-299.61	-24.11	2.35	999.58	-
7.114e+04												
47	305	3.211e+04	414.14	-0.01	0.0	0.0	-609.48	-160.88	55.45	8.53	-1.256e+04	
3.211e+04												
		-2.516e+04	-1.256e+04	-0.03	-38.02	178.0	-534.31	-160.88	36.44	8.53	-4380.95	
3474.51												
						356.0	-459.13	-160.88	17.43	8.53	414.14	-
2.516e+04												
47	325	1.035e+04	199.72	5.94e-03	0.0	0.0	-565.65	-78.84	0.26	2.84	108.02	
1.035e+04												
		-1.772e+04	108.02	-5.67e-03	0.0	178.0	-490.48	-78.84	0.26	2.84	153.87	-
3683.36												
						356.0	-415.31	-78.84	0.26	2.84	199.72	-
1.772e+04												
47	327	2.850e+04	640.10	0.02	0.0	0.0	-1290.41	-217.77	0.59	8.03	428.72	
2.850e+04												
		-4.903e+04	428.72	-0.02	0.0	178.0	-1215.24	-217.77	0.59	8.03	534.41	-
1.026e+04												
						356.0	-1140.06	-217.77	0.59	8.03	640.10	-
4.903e+04												
47	331	3.152e+04	713.50	0.02	0.0	0.0	-1411.20	-240.93	0.65	8.90	482.17	
3.152e+04												
		-5.425e+04	482.17	-0.02	0.0	178.0	-1336.03	-240.93	0.65	8.90	597.83	-
1.136e+04												
						356.0	-1260.85	-240.93	0.65	8.90	713.50	-
5.425e+04												
47	333	1.874e+04	246.13	-5.11e-03	0.0	0.0	-561.44	-107.85	13.42	7.48	-4529.73	
1.874e+04												
		-1.966e+04	-4529.73	0.01	0.0	178.0	-486.27	-107.85	13.42	7.48	-2141.80	-
458.52												
						356.0	-411.09	-107.85	13.42	7.48	246.13	-
1.966e+04												
47	337	3.689e+04	686.51	0.01	0.0	0.0	-1286.20	-246.78	13.75	12.67	-4209.03	
3.689e+04												
		-5.097e+04	-4209.03	8.86e-03	0.0	178.0	-1211.02	-246.78	13.75	12.67	-1761.26	-
7038.84												
						356.0	-1135.85	-246.78	13.75	12.67	686.51	-
5.097e+04												
47	339	2.011e+04	5066.47	0.02	0.0	0.0	-1294.62	-188.76	-12.56	3.40	5066.47	
2.011e+04												
		-4.709e+04	593.69	-0.03	0.0	178.0	-1219.45	-188.76	-12.56	3.40	2830.08	-
1.349e+04												
						356.0	-1144.27	-188.76	-12.56	3.40	593.69	-
4.709e+04												
47	345	4768.63	220.80	-0.04	-12.67	0.0	-528.40	-40.55	1.26	-0.64	-229.33	
4768.63												
		-1.192e+04	-229.33	-0.01	0.0	178.0	-453.22	-46.88	1.26	-0.64	-4.27	-
3012.38												
						356.0	-378.05	-53.22	1.26	-0.64	220.80	-
1.192e+04												
48	5	1.091e+04	-247.89	-0.04	0.0	0.0	-2900.77	-142.35	9.68	12.69	-3558.05	

Viale Duca Alessandro n. 11 – 43123 Parma
Cell. 335 1403156 – E mail ing.concari@gmail.com
Sito web: studioaire.it – P.IVA 02561480340

1.091e+04												
		-3.779e+04	-3558.05	-0.05	0.0	171.1	-2806.86	-142.35	9.68	12.69	-1902.97	-
1.344e+04												
						342.1	-2712.95	-142.35	9.68	12.69	-247.89	-
3.779e+04												
48	23	3.488e+04	-233.10	0.07	0.0	0.0	-2252.39	-224.66	5.82	-12.41	-2224.23	
3.488e+04												
		-4.198e+04	-2224.23	-0.03	0.0	171.1	-2158.48	-224.66	5.82	-12.41	-1228.66	-
3550.46												
						342.1	-2064.57	-224.66	5.82	-12.41	-233.10	-
4.198e+04												
48	81	3.018e+04	223.52	-0.20	-91.34	0.0	-361.70	302.74	16.27	-9.09	-5342.57	-
5.776e+04												
		-5.776e+04	-5342.57	-0.07	0.0	171.1	-289.46	257.07	16.27	-9.09	-2559.52	-
9881.59												
						342.1	-217.22	211.40	16.27	-9.09	223.52	
3.018e+04												
48	141	-3138.01	35.99	-0.05	0.0	0.0	-1934.31	-25.34	92.18	2.56	-1.587e+04	-
3138.01												
		-1.181e+04	-1.587e+04	-0.17	-91.34	171.1	-1840.40	-25.34	46.51	2.56	-4013.00	-
7471.63												
						342.1	-1746.49	-25.34	0.84	2.56	35.99	-
1.181e+04												
48	145	1.350e+04	258.15	-0.05	0.0	0.0	-301.79	86.07	86.90	0.43	-1.388e+04	-
1.594e+04												
		-1.594e+04	-1.388e+04	-0.14	-91.34	171.1	-229.55	86.07	41.23	0.43	-2921.42	-
1219.55												
						342.1	-157.31	86.07	-4.44	0.43	225.49	
1.350e+04												
48	147	5769.09	223.50	0.04	0.0	0.0	-278.61	-8.12	85.54	-17.77	-1.347e+04	
5769.09												
		2992.38	-1.347e+04	-0.13	-91.34	171.1	-206.37	-8.12	39.87	-17.77	-2738.65	
4380.74												
						342.1	-134.13	-8.12	-5.80	-17.77	175.89	
2992.38												
48	153	1.359e+05	1930.96	-0.68	0.0	0.0	-31.33	986.70	154.31	-118.66	-5.087e+04	-
2.022e+05												
		-2.022e+05	-5.087e+04	-0.69	0.0	171.1	40.91	986.70	154.31	-118.66	-2.447e+04	-
3.316e+04												
						342.1	113.15	986.70	154.31	-118.66	1930.96	
1.359e+05												
48	156	2.235e+05	4.763e+04	0.68	0.0	0.0	-2893.63	-1171.63	-145.51	122.13	4.763e+04	
2.235e+05												
		-1.780e+05	-2151.29	0.65	0.0	171.1	-2821.40	-1171.63	-145.51	122.13	2.274e+04	
2.276e+04												
						342.1	-2749.16	-1171.63	-145.51	122.13	-2151.29	-
1.780e+05												
48	173	1.044e+05	2356.09	-0.48	0.0	0.0	57.72	720.47	190.63	92.41	-6.287e+04	-
1.439e+05												
		-1.439e+05	-6.287e+04	-0.86	0.0	171.1	129.96	720.47	190.63	92.41	-3.026e+04	-
1.978e+04												
						342.1	202.19	720.47	190.63	92.41	2356.09	
1.044e+05												
48	176	1.652e+05	5.964e+04	0.48	0.0	0.0	-2982.68	-905.40	-181.82	-88.94	5.964e+04	
1.652e+05												
		-1.464e+05	-2576.43	0.81	0.0	171.1	-2910.44	-905.40	-181.82	-88.94	2.853e+04	
9376.72												
						342.1	-2838.20	-905.40	-181.82	-88.94	-2576.43	-
1.464e+05												
48	177	1.059e+05	1753.24	0.10	0.0	0.0	222.15	706.24	154.35	-131.61	-5.106e+04	-
1.379e+05												
		-1.379e+05	-5.106e+04	-0.70	0.0	171.1	294.39	706.24	154.35	-131.61	-2.465e+04	-
1.599e+04												
						342.1	366.63	706.24	154.35	-131.61	1753.24	
1.059e+05												
48	180	1.591e+05	4.782e+04	-0.09	0.0	0.0	-3147.11	-891.17	-145.54	135.08	4.782e+04	
1.591e+05												
		-1.480e+05	-1973.58	0.65	0.0	171.1	-3074.87	-891.17	-145.54	135.08	2.292e+04	
5587.16												
						342.1	-3002.63	-891.17	-145.54	135.08	-1973.58	-
1.480e+05												
48	188	1.045e+05	2.024e+04	0.30	0.0	0.0	-2101.64	-569.17	-62.12	54.31	2.024e+04	
1.045e+05												
		-9.048e+04	-1014.50	0.27	0.0	171.1	-2029.40	-569.17	-62.12	54.31	9612.86	
7009.16												
						342.1	-1957.16	-569.17	-62.12	54.31	-1014.50	-
9.048e+04												
48	192	1.037e+05	1.919e+04	0.22	0.0	0.0	-2122.50	-567.56	-58.89	86.09	1.919e+04	
1.037e+05												
		-9.076e+04	-957.55	0.26	0.0	171.1	-2050.26	-567.56	-58.89	86.09	9117.10	
6473.61												
						342.1	-1978.02	-567.56	-58.89	86.09	-957.55	-
9.076e+04												
48	205	3.575e+04	999.83	-0.21	0.0	0.0	-761.83	273.34	88.52	42.44	-2.929e+04	-
5.856e+04												
		-5.856e+04	-2.929e+04	-0.40	0.0	171.1	-689.59	273.34	88.52	42.44	-1.414e+04	-
1.140e+04												
						342.1	-617.35	273.34	88.52	42.44	999.83	
3.575e+04												
48	208	7.979e+04	2.605e+04	0.21	0.0	0.0	-2163.13	-458.27	-79.71	-38.97	2.605e+04	
7.979e+04												
		-7.779e+04	-1220.17	0.35	0.0	171.1	-2090.89	-458.27	-79.71	-38.97	1.242e+04	

Viale Duca Alessandro n. 11 – 43123 Parma
Cell. 335 1403156 – E mail ing.concari@gmail.com
Sito web: studioaire.it – P.IVA 02561480340

1001.51												
						342.1	-2018.65	-458.27	-79.71	-38.97	-1220.17	-
7.779e+04												
48	209	3.744e+04	742.26	0.05	0.0	0.0	-684.51	273.72	73.00	-58.13	-2.423e+04	-
5.714e+04												
		-5.714e+04	-2.423e+04	-0.33	0.0	171.1	-612.27	273.72	73.00	-58.13	-1.175e+04	-
9851.30												
						342.1	-540.03	273.72	73.00	-58.13	742.26	
3.744e+04												
48	212	7.837e+04	2.100e+04	-0.05	0.0	0.0	-2240.45	-458.64	-64.19	61.60	2.100e+04	
7.837e+04												
		-7.947e+04	-962.59	0.29	0.0	171.1	-2168.21	-458.64	-64.19	61.60	1.002e+04	-
550.69												
						342.1	-2095.97	-458.64	-64.19	61.60	-962.59	-
7.947e+04												
48	220	8.633e+04	1.604e+04	0.24	0.0	0.0	-1979.39	-477.05	-49.32	44.04	1.604e+04	
8.633e+04												
		-7.708e+04	-840.25	0.22	0.0	171.1	-1907.15	-477.05	-49.32	44.04	7597.56	
4624.20												
						342.1	-1834.91	-477.05	-49.32	44.04	-840.25	-
7.708e+04												
48	224	8.569e+04	1.517e+04	0.18	0.0	0.0	-1995.37	-475.67	-46.66	69.72	1.517e+04	
8.569e+04												
		-7.729e+04	-793.72	0.21	0.0	171.1	-1923.13	-475.67	-46.66	69.72	7188.32	
4200.92												
						342.1	-1850.89	-475.67	-46.66	69.72	-793.72	-
7.729e+04												
48	237	2.504e+04	789.12	-0.17	0.0	0.0	-891.94	203.90	72.60	34.69	-2.405e+04	-
4.536e+04												
		-4.536e+04	-2.405e+04	-0.33	0.0	171.1	-819.70	203.90	72.60	34.69	-1.163e+04	-
1.016e+04												
						342.1	-747.46	203.90	72.60	34.69	789.12	
2.504e+04												
48	240	6.659e+04	2.082e+04	0.17	0.0	0.0	-2033.02	-388.83	-63.80	-31.22	2.082e+04	
6.659e+04												
		-6.707e+04	-1009.46	0.28	0.0	171.1	-1960.78	-388.83	-63.80	-31.22	9904.79	-
239.27												
						342.1	-1888.54	-388.83	-63.80	-31.22	-1009.46	-
6.707e+04												
48	241	2.632e+04	579.47	0.04	0.0	0.0	-832.40	203.91	59.90	-46.60	-1.991e+04	-
4.419e+04												
		-4.419e+04	-1.991e+04	-0.27	0.0	171.1	-760.16	203.91	59.90	-46.60	-9667.50	-
8939.45												
						342.1	-687.92	203.91	59.90	-46.60	579.47	
2.632e+04												
48	244	6.542e+04	1.668e+04	-0.04	0.0	0.0	-2092.56	-388.84	-51.09	50.08	1.668e+04	
6.542e+04												
		-6.835e+04	-799.80	0.23	0.0	171.1	-2020.33	-388.84	-51.09	50.08	7940.42	-
1462.54												
						342.1	-1948.09	-388.84	-51.09	50.08	-799.80	-
6.835e+04												
48	253	7800.84	-165.57	-0.03	0.0	0.0	-2019.07	-99.54	6.67	8.54	-2448.90	
7800.84												
		-2.625e+04	-2448.90	-0.04	0.0	171.1	-1946.83	-99.54	6.67	8.54	-1307.23	-
9224.90												
						342.1	-1874.59	-99.54	6.67	8.54	-165.57	-
2.625e+04												
48	263	2.378e+04	-155.70	0.05	0.0	0.0	-1586.82	-154.41	4.10	-8.19	-1559.69	
2.378e+04												
		-2.904e+04	-1559.69	-0.02	0.0	171.1	-1514.58	-154.41	4.10	-8.19	-857.69	-
2629.01												
						342.1	-1442.34	-154.41	4.10	-8.19	-155.70	-
2.904e+04												
48	285	1.749e+04	148.26	-0.13	-60.89	0.0	-454.19	190.24	11.41	-5.85	-3753.88	-
3.718e+04												
		-3.718e+04	-3753.88	-0.05	0.0	171.1	-381.95	159.79	11.41	-5.85	-1802.81	-
7242.82												
						342.1	-309.71	129.34	11.41	-5.85	148.26	
1.749e+04												
48	317	6365.34	165.19	-0.03	0.0	0.0	-414.25	45.80	58.49	0.50	-9445.66	-
9301.59												
		-9301.59	-9445.66	-0.09	-60.89	171.1	-342.01	45.80	28.05	0.50	-2044.07	-
1468.13												
						342.1	-269.77	45.80	-2.40	0.50	149.57	
6365.34												
48	319	5172.89	142.09	0.02	0.0	0.0	-398.80	-17.00	57.59	-11.64	-9168.91	
5172.89												
		-642.10	-9168.91	-0.09	-60.89	171.1	-326.56	-17.00	27.14	-11.64	-1922.23	
2265.40												
						342.1	-254.32	-17.00	-3.30	-11.64	116.51	-
642.10												
48	321	-1561.28	23.69	-0.03	0.0	0.0	-1374.77	-21.53	61.68	1.79	-1.066e+04	-
1561.28												
		-8924.98	-1.066e+04	-0.11	-60.89	171.1	-1302.53	-21.53	31.23	1.79	-2713.92	-
5243.13												
						342.1	-1230.29	-21.53	0.78	1.79	23.69	-
8924.98												
48	325	3980.48	-2.27	4.42e-03	0.0	0.0	-639.18	-34.76	1.68	0.63	-576.50	
3980.48												
		-7911.04	-576.50	-8.03e-03	0.0	171.1	-566.94	-34.76	1.68	0.63	-289.38	-
1965.28												
						342.1	-494.70	-34.76	1.68	0.63	-2.27	-

Viale Duca Alessandro n. 11 – 43123 Parma
Cell. 335 1403156 – E mail ing.concari@gmail.com
Sito web: studioaire.it – P.IVA 02561480340

7911.04												
48	327	1.062e+04	-110.17	0.01	0.0	0.0	-1462.48	-92.46	4.40	1.74	-1616.91	
1.062e+04												
		-2.102e+04	-1616.91	-0.02	0.0	171.1	-1390.24	-92.46	4.40	1.74	-863.54	-
5200.99												
						342.1	-1318.00	-92.46	4.40	1.74	-110.17	-
2.102e+04												
48	331	1.172e+04	-128.15	0.01	0.0	0.0	-1599.70	-102.08	4.86	1.92	-1790.31	
1.172e+04												
		-2.320e+04	-1790.31	-0.03	0.0	171.1	-1527.46	-102.08	4.86	1.92	-959.23	-
5740.28												
						342.1	-1455.22	-102.08	4.86	1.92	-128.15	-
2.320e+04												
48	339	1.665e+04	-123.94	0.03	0.0	0.0	-1456.04	-118.63	4.03	-3.32	-1501.60	
1.665e+04												
		-2.394e+04	-1501.60	-0.02	0.0	171.1	-1383.80	-118.63	4.03	-3.32	-812.77	-
3645.36												
						342.1	-1311.56	-118.63	4.03	-3.32	-123.94	-
2.394e+04												
48	349	2771.52	24.79	2.93e-03	0.0	0.0	-592.65	-24.93	12.95	-0.61	-2322.65	
2771.52												
		-5756.51	-2322.65	-0.02	-12.18	171.1	-520.41	-24.93	6.86	-0.61	-628.14	-
1492.50												
						342.1	-448.17	-24.93	0.77	-0.61	24.79	-
5756.51												
48	351	9406.07	-83.11	0.01	0.0	0.0	-1415.95	-82.63	15.68	0.50	-3363.07	
9406.07												
		-1.886e+04	-3363.07	-0.04	-12.18	171.1	-1343.71	-82.63	9.59	0.50	-1202.29	-
4728.21												
						342.1	-1271.47	-82.63	3.50	0.50	-83.11	-
1.886e+04												

Si riportano di seguito i valori minimi e massimi degli sforzi M3 – M2 – N – V2 – V3 – T per i pilastri:

Pilas.	**M3 mx/mn**	**M2 mx/mn**	**D 2 / D 3**	**Q 2 / Q 3**	**N**	**V 2**	**V 3**	**T**
	-2.275e+05	-1.154e+05	-1.07	-95.05	-7504.44	-2949.34	-813.75	-7407.74
	2.244e+05	1.029e+05	1.08	10.28	1691.86	2776.08	887.40	7431.02

Trave	**Cmb**	**M3 mx/mn**	**M2 mx/mn**	**D 2 / D 3**	**Q 2 / Q 3**	**Pos.**	**N**	**V 2**	**V 3**	**T**	**M 2**	**M 3**
		daN cm	daN cm	cm	daN	cm	daN	daN	daN	daN cm	daN cm	daN
cm												
1	23	32.00	3268.41	-0.17	-640.52	0.0	62.99	901.50	54.92	90.82	-3322.18	-
6.972e+04												
		-6.972e+04	-3322.18	0.02	0.0	60.0	62.99	581.24	54.92	90.82	-26.89	-
2.523e+04												
						120.0	62.99	260.98	54.92	90.82	3268.41	
32.00												
1	25	-27.11	1738.60	-0.07	-85.63	0.0	-28.88	233.02	-28.13	65.38	1738.60	-
2.285e+04												
		-2.285e+04	-1636.62	-0.03	0.0	60.0	-28.88	190.20	-28.13	65.38	50.99	-
1.015e+04												
						120.0	-28.88	147.39	-28.13	65.38	-1636.62	-
27.11												
1	79	75.53	1148.26	-0.17	-640.52	0.0	52.36	914.46	13.40	58.55	-459.62	-
7.123e+04												
		-7.123e+04	-459.62	0.04	0.0	60.0	52.36	594.20	13.40	58.55	344.32	-
2.597e+04												
						120.0	52.36	273.94	13.40	58.55	1148.26	
75.53												
1	101	-17.14	489.47	-0.25	-867.32	0.0	49.34	1269.91	10.56	191.23	-777.61	-
1.004e+05												
		-1.004e+05	-777.61	-0.06	0.0	60.0	49.34	836.25	10.56	191.23	-144.07	-
3.718e+04												
						120.0	49.34	402.59	10.56	191.23	489.47	-
17.14												
1	119	29.50	3173.99	-0.18	-640.52	0.0	97.00	928.31	56.63	102.29	-3621.42	-
7.294e+04												
		-7.294e+04	-3621.42	-0.01	0.0	60.0	97.00	608.05	56.63	102.29	-223.71	-
2.685e+04												
						120.0	97.00	287.79	56.63	102.29	3173.99	
29.50												
1	143	16.16	2338.01	-0.19	-640.52	0.0	105.64	959.34	44.57	123.31	-3010.88	-
7.667e+04												
		-7.667e+04	-3010.88	-0.04	0.0	60.0	105.64	639.08	44.57	123.31	-336.43	-
2.872e+04												
						120.0	105.64	318.82	44.57	123.31	2338.01	
16.16												
1	154	174.34	7841.44	-0.10	-388.03	0.0	-172.11	504.67	-128.67	-70.81	7841.44	-
3.722e+04												
		-3.722e+04	-2530.74	0.06	0.0	60.0	-172.11	310.65	-128.67	-70.81	2655.35	-
1.270e+04												
						120.0	-172.11	116.64	-128.67	-70.81	-2530.74	
174.34												
1	174	113.66	1.129e+04	-0.08	-388.03	0.0	-285.82	463.20	-176.71	-24.76	1.129e+04	-
2.860e+04												
		-2.860e+04	7255.30	0.19	0.0	60.0	-285.82	269.19	-176.71	-24.76	9275.05	-
8420.95												
						120.0	-285.82	75.17	-176.71	-24.76	7255.30	
113.66												
1	175	-109.37	-5576.43	-0.16	-388.03	0.0	320.89	707.60	204.29	183.19	-1.292e+04	-

Viale Duca Alessandro n. 11 – 43123 Parma
Cell. 335 1403156 – E mail ing.concari@gmail.com
Sito web: studioaire.it – P.IVA 02561480340

6.533e+04
-6.533e+04 -1.292e+04 -0.20 0.0 60.0 320.89 513.59 204.29 183.19 -9250.49 -
2.690e+04
120.0 320.89 319.57 204.29 183.19 -5576.43 -
109.37
1 176 29.10 1.168e+04 -0.08 -388.03 0.0 -197.19 432.47 -100.86 46.02 6549.47 -
3.228e+04
-3.228e+04 6549.47 0.14 0.0 60.0 -197.19 238.45 -100.86 46.02 9112.66 -
1.031e+04
120.0 -197.19 44.44 -100.86 46.02 1.168e+04
29.10
1 183 -70.89 1.063e+04 -0.16 -388.03 0.0 252.33 725.43 184.53 159.34 -1.157e+04 -
6.746e+04
-6.746e+04 -1.157e+04 -0.21 0.0 60.0 252.33 531.41 184.53 159.34 -471.07 -
2.795e+04
120.0 252.33 337.40 184.53 159.34 1.063e+04 -
70.89
1 186 77.87 3126.67 -0.11 -388.03 0.0 -68.96 548.69 -50.81 13.03 3126.67 -
4.254e+04
-4.254e+04 -636.70 0.02 0.0 60.0 -68.96 354.67 -50.81 13.03 1244.99 -
1.541e+04
120.0 -68.96 160.66 -50.81 13.03 -636.70
77.87
1 206 51.57 4764.22 -0.10 -388.03 0.0 -122.80 528.58 -73.79 32.45 4764.22 -
3.851e+04
-3.851e+04 3818.69 0.09 0.0 60.0 -122.80 334.57 -73.79 32.45 4291.45 -
1.341e+04
120.0 -122.80 140.55 -73.79 32.45 3818.69
51.57
1 207 -47.28 -2139.81 -0.14 -388.03 0.0 157.87 642.22 101.36 125.98 -6393.96 -
5.542e+04
-5.542e+04 -6393.96 -0.10 0.0 60.0 157.87 448.21 101.36 125.98 -4266.89 -
2.191e+04
120.0 157.87 254.19 101.36 125.98 -2139.81 -
47.28
1 208 14.46 5807.99 -0.10 -388.03 0.0 -82.81 515.00 -39.47 63.52 2607.56 -
4.014e+04
-4.014e+04 2607.56 0.06 0.0 60.0 -82.81 320.98 -39.47 63.52 4207.77 -
1.424e+04
120.0 -82.81 126.97 -39.47 63.52 5807.99
14.46
1 215 -30.55 5335.30 -0.14 -388.03 0.0 125.49 649.93 92.25 115.69 -5758.88 -
5.634e+04
-5.634e+04 -5758.88 -0.10 0.0 60.0 125.49 455.92 92.25 115.69 -211.79 -
2.237e+04
120.0 125.49 261.90 92.25 115.69 5335.30 -
30.55
1 218 63.17 2387.14 -0.11 -388.03 0.0 -52.75 555.59 -38.65 25.83 2387.14 -
4.337e+04
-4.337e+04 -349.55 0.02 0.0 60.0 -52.75 361.57 -38.65 25.83 1018.80 -
1.583e+04
120.0 -52.75 167.56 -38.65 25.83 -349.55
63.17
1 238 42.05 3728.44 -0.10 -388.03 0.0 -96.83 539.05 -57.50 41.33 3728.44 -
4.008e+04
-4.008e+04 3269.68 0.07 0.0 60.0 -96.83 345.03 -57.50 41.33 3499.06 -
1.420e+04
120.0 -96.83 151.02 -57.50 41.33 3269.68
42.05
1 239 -37.76 -1590.81 -0.13 -388.03 0.0 131.90 631.76 85.07 117.10 -5358.18 -
5.385e+04
-5.385e+04 -5358.18 -0.08 0.0 60.0 131.90 437.74 85.07 117.10 -3474.49 -
2.112e+04
120.0 131.90 243.73 85.07 117.10 -1590.81 -
37.76
1 240 12.15 4881.52 -0.10 -388.03 0.0 -64.42 528.08 -29.66 66.36 1977.19 -
4.139e+04
-4.139e+04 1977.19 0.05 0.0 60.0 -64.42 334.07 -29.66 66.36 3429.36 -
1.487e+04
120.0 -64.42 140.05 -29.66 66.36 4881.52
12.15
1 247 -24.25 4486.82 -0.13 -388.03 0.0 105.01 637.66 77.45 108.72 -4826.47 -
5.455e+04
-5.455e+04 -4826.47 -0.08 0.0 60.0 105.01 443.64 77.45 108.72 -169.82 -
2.147e+04
120.0 105.01 249.63 77.45 108.72 4486.82 -
24.25
1 257 -17.38 1063.58 -0.06 -85.63 0.0 -17.18 222.05 -17.13 54.23 1063.58 -
2.153e+04
-2.153e+04 -992.42 -0.02 0.0 60.0 -17.18 179.24 -17.13 54.23 35.58 -
9487.10
120.0 -17.18 136.42 -17.13 54.23 -992.42 -
17.38
1 263 21.61 2218.40 -0.12 -438.43 0.0 42.82 627.68 37.26 64.81 -2252.99 -
4.899e+04
-4.899e+04 -2252.99 0.01 0.0 60.0 42.82 408.47 37.26 64.81 -17.29 -
1.791e+04
120.0 42.82 189.25 37.26 64.81 2218.40
21.61
1 291 50.63 804.97 -0.12 -438.43 0.0 35.74 636.32 9.58 43.29 -344.61 -
5.000e+04
-5.000e+04 -344.61 0.03 0.0 60.0 35.74 417.11 9.58 43.29 230.18 -

Viale Duca Alessandro n. 11 – 43123 Parma
Cell. 335 1403156 – E mail ing.concari@gmail.com
Sito web: studioaire.it – P.IVA 02561480340

1.840e+04													
						120.0	35.74	197.89	9.58	43.29	804.97		
50.63													
1	301	-11.15	365.78	-0.17	-589.63	0.0	33.72	873.29	7.69	131.74	-556.60	-	
6.943e+04													
		-6.943e+04	-556.60	-0.04	0.0	60.0	33.72	578.48	7.69	131.74	-95.41	-	
2.588e+04													
						120.0	33.72	283.66	7.69	131.74	365.78	-	
11.15													
1	311	19.94	2155.45	-0.13	-438.43	0.0	65.50	645.56	38.40	72.45	-2452.47	-	
5.114e+04													
		-5.114e+04	-2452.47	-8.85e-03	0.0	60.0	65.50	426.34	38.40	72.45	-148.51	-	
1.898e+04													
						120.0	65.50	207.13	38.40	72.45	2155.45		
19.94													
1	323	11.05	1598.14	-0.13	-438.43	0.0	71.26	666.25	30.36	86.46	-2045.45	-	
5.363e+04													
		-5.363e+04	-2045.45	-0.03	0.0	60.0	71.26	447.03	30.36	86.46	-223.66	-	
2.023e+04													
						120.0	71.26	227.81	30.36	86.46	1598.14		
11.05													
1	325	2.08	295.96	-0.05	-85.63	0.0	6.22	200.12	4.85	31.95	-286.47	-	
1.887e+04													
		-1.887e+04	-286.47	-1.87e-03	0.0	60.0	6.22	157.30	4.85	31.95	4.75	-	
8151.66													
						120.0	6.22	114.49	4.85	31.95	295.96	2.08	
1	327	2.14	839.44	-0.12	-388.03	0.0	17.54	585.40	13.79	79.22	-814.87	-	
4.696e+04													
		-4.696e+04	-814.87	-4.96e-03	0.0	60.0	17.54	391.39	13.79	79.22	12.28	-	
1.766e+04													
						120.0	17.54	197.37	13.79	79.22	839.44	2.14	
1	331	2.16	930.02	-0.13	-438.43	0.0	19.42	649.62	15.27	87.09	-902.94	-	
5.165e+04													
		-5.165e+04	-902.94	-5.47e-03	0.0	60.0	19.42	430.40	15.27	87.09	13.54	-	
1.925e+04													
						120.0	19.42	211.19	15.27	87.09	930.02	2.16	
1	333	-7.65	388.55	-0.06	-85.63	0.0	-5.48	211.09	-6.14	43.09	388.55	-	
2.020e+04													
		-2.020e+04	-348.23	-0.01	0.0	60.0	-5.48	168.27	-6.14	43.09	20.16	-	
8819.38													
						120.0	-5.48	125.45	-6.14	43.09	-348.23	-7.65	
1	339	11.87	1483.63	-0.11	-388.03	0.0	29.23	574.44	24.78	68.07	-1489.90	-	
4.564e+04													
		-4.564e+04	-1489.90	3.69e-03	0.0	60.0	29.23	380.42	24.78	68.07	-3.13	-	
1.699e+04													
						120.0	29.23	186.41	24.78	68.07	1483.63		
11.87													
3	45	7.373e+04	-185.32	0.06	-40.90	0.0	-216.48	-898.35	-4.49	55.21	-185.32		
7.373e+04													
		-3.652e+04	-723.69	-8.68e-03	0.0	60.0	-227.06	-918.80	-4.49	55.21	-454.50		
1.922e+04													
						120.0	-237.63	-939.25	-4.49	55.21	-723.69	-	
3.652e+04													
3	79	4.807e+04	237.94	0.04	-40.90	0.0	-280.44	-809.46	-15.85	36.93	237.94		
4.807e+04													
		-5.152e+04	-1664.04	0.05	0.0	60.0	-298.06	-829.92	-15.85	36.93	-713.05	-	
1116.07													
						120.0	-315.68	-850.37	-15.85	36.93	-1664.04	-	
5.152e+04													
3	121	8076.44	2662.80	8.78e-03	-31.46	0.0	50.21	47.25	66.74	17.13	-4076.86		
4293.95													
		4293.95	-4076.86	-0.05	-21.15	60.0	50.21	31.52	56.16	17.13	-389.83		
6657.14													
						120.0	50.21	15.79	45.59	17.13	2662.80		
8076.44													
3	145	9829.61	3501.47	-4.05e-03	-31.46	0.0	46.63	184.07	96.02	16.26	-5906.05	-	
1.037e+04													
		-1.037e+04	-5906.05	-0.05	-35.24	60.0	46.63	168.34	78.40	16.26	-673.63		
201.16													
						120.0	46.63	152.61	60.77	16.26	3501.47		
9829.61													
3	154	7.437e+04	2.925e+04	0.07	-31.46	0.0	-667.06	-1798.04	-448.41	27.46	2.925e+04		
7.437e+04													
		-1.621e+05	-2.487e+04	0.16	0.0	60.0	-667.06	-1813.77	-448.41	27.46	2188.12	-	
4.338e+04													
						120.0	-667.06	-1829.50	-448.41	27.46	-2.487e+04	-	
1.621e+05													
3	155	1.416e+05	2.363e+04	-0.03	-31.46	0.0	479.71	1112.91	429.69	23.24	-2.824e+04	-	
8846.67													
		-8846.67	-2.824e+04	-0.15	0.0	60.0	479.71	1097.18	429.69	23.24	-2304.40		
6.684e+04													
						120.0	479.71	1081.45	429.69	23.24	2.363e+04		
1.416e+05													
3	162	8.438e+04	3.004e+04	0.07	-31.46	0.0	-618.26	-1756.93	-434.37	28.49	3.004e+04		
8.438e+04													
		-1.553e+05	-2.243e+04	0.17	0.0	60.0	-618.26	-1772.66	-434.37	28.49	3803.57	-	
3.499e+04													
						120.0	-618.26	-1788.39	-434.37	28.49	-2.243e+04	-	
1.553e+05													
3	163	1.348e+05	2.119e+04	-0.03	-31.46	0.0	430.91	1071.80	415.65	22.21	-2.903e+04	-	
1.886e+04													
		-1.886e+04	-2.903e+04	-0.16	0.0	60.0	430.91	1056.07	415.65	22.21	-3919.85		

Viale Duca Alessandro n. 11 – 43123 Parma
Cell. 335 1403156 – E mail ing.concari@gmail.com
Sito web: studioaire.it – P.IVA 02561480340

5.845e+04											
						120.0	430.91	1040.34	415.65	22.21	2.119e+04
1.348e+05											
3	186	5.154e+04	1.319e+04	0.04	-31.46	0.0	-345.36	-982.97	-202.92	26.29	1.319e+04
5.154e+04											
		-7.691e+04	-1.130e+04	0.07	0.0	60.0	-345.36	-998.70	-202.92	26.29	947.20
1.221e+04											
						120.0	-345.36	-1014.43	-202.92	26.29	-1.130e+04
7.691e+04											
3	187	5.644e+04	1.006e+04	8.08e-03	-31.46	0.0	158.01	297.84	184.19	24.42	-1.218e+04
1.398e+04											
		1.398e+04	-1.218e+04	-0.06	0.0	60.0	158.01	282.11	184.19	24.42	-1063.48
3.568e+04											
						120.0	158.01	266.38	184.19	24.42	1.006e+04
5.644e+04											
3	194	5.591e+04	1.354e+04	0.05	-31.46	0.0	-323.95	-964.88	-196.87	26.74	1.354e+04
5.591e+04											
		-7.395e+04	-1.024e+04	0.08	0.0	60.0	-323.95	-980.61	-196.87	26.74	1652.99
8547.02											
						120.0	-323.95	-996.34	-196.87	26.74	-1.024e+04
7.395e+04											
3	195	5.348e+04	8996.50	-7.93e-03	-31.46	0.0	136.60	279.75	178.15	23.97	-1.254e+04
9606.77											
		9606.77	-1.254e+04	-0.07	0.0	60.0	136.60	264.02	178.15	23.97	-1769.27
3.202e+04											
						120.0	136.60	248.28	178.15	23.97	8996.50
5.348e+04											
3	214	7.654e+04	1.053e+04	0.06	-31.46	0.0	-255.77	-949.89	-153.07	24.28	1.053e+04
7.654e+04											
		-5.449e+04	-8158.72	-7.68e-03	0.0	60.0	-255.77	-965.62	-153.07	24.28	1186.87
1.150e+04											
						120.0	-255.77	-981.35	-153.07	24.28	-8158.72
5.449e+04											
3	218	4.799e+04	1.074e+04	0.04	-31.46	0.0	-296.43	-858.75	-165.44	26.11	1.074e+04
4.799e+04											
		-6.395e+04	-9227.54	0.06	0.0	60.0	-296.43	-874.48	-165.44	26.11	755.35
7511.39											
						120.0	-296.43	-890.22	-165.44	26.11	-9227.54
6.395e+04											
3	219	4.348e+04	7988.02	0.01	-31.46	0.0	109.08	173.63	146.72	24.60	-9731.27
1.753e+04											
		1.753e+04	-9731.27	-0.05	0.0	60.0	109.08	157.89	146.72	24.60	-871.62
3.098e+04											
						120.0	109.08	142.16	146.72	24.60	7988.02
4.348e+04											
3	226	5.150e+04	1.102e+04	0.04	-31.46	0.0	-279.19	-844.17	-160.60	26.47	1.102e+04
5.150e+04											
		-6.157e+04	-8374.76	0.06	0.0	60.0	-279.19	-859.90	-160.60	26.47	1323.29
4562.41											
						120.0	-279.19	-875.63	-160.60	26.47	-8374.76
6.157e+04											
3	227	4.110e+04	7135.24	8.04e-03	-31.46	0.0	91.84	159.04	141.88	24.24	-1.001e+04
1.402e+04											
		1.402e+04	-1.001e+04	-0.05	0.0	60.0	91.84	143.31	141.88	24.24	-1439.57
2.803e+04											
						120.0	91.84	127.58	141.88	24.24	7135.24
4.110e+04											
3	246	6.816e+04	8592.95	0.05	-31.46	0.0	-224.25	-832.06	-125.23	24.48	8592.95
6.816e+04											
		-4.590e+04	-6698.45	-5.98e-03	0.0	60.0	-224.25	-847.79	-125.23	24.48	947.25
1.160e+04											
						120.0	-224.25	-863.52	-125.23	24.48	-6698.45
4.590e+04											
3	273	5.076e+04	-101.04	0.04	-31.46	0.0	-149.05	-614.48	-3.42	38.09	-101.04
5.076e+04											
		-2.487e+04	-511.26	-5.57e-03	0.0	60.0	-156.10	-630.21	-3.42	38.09	-306.15
1.342e+04											
						120.0	-163.15	-645.94	-3.42	38.09	-511.26
2.487e+04											
3	291	3.365e+04	181.13	0.03	-31.46	0.0	-191.69	-555.23	-10.99	25.91	181.13
3.365e+04											
		-3.487e+04	-1138.16	0.03	0.0	60.0	-203.44	-570.96	-10.99	25.91	-478.52
139.97											
						120.0	-215.18	-586.69	-10.99	25.91	-1138.16
3.487e+04											
3	305	6867.86	1703.19	9.04e-03	-31.46	0.0	21.66	-7.46	43.42	14.64	-2661.63
6867.86											
		4084.79	-2661.63	-0.04	-14.10	60.0	21.66	-23.19	36.37	14.64	-267.76
5948.27											
						120.0	21.66	-38.92	29.32	14.64	1703.19
4084.79											
3	317	5253.57	2262.30	4.87e-04	-31.46	0.0	19.27	83.75	62.94	14.06	-3881.09
2908.89											
		-2908.89	-3881.09	-0.03	-23.50	60.0	19.27	68.02	51.19	14.06	-456.96
1644.28											
						120.0	19.27	52.29	39.45	14.06	2262.30
5253.57											
3	325	1.202e+04	168.81	9.57e-03	-31.46	0.0	-35.46	-116.89	-3.21	9.66	168.81
1.202e+04											
		-3898.50	-216.02	1.63e-03	0.0	60.0	-35.46	-132.62	-3.21	9.66	-23.60
4530.53											
						120.0	-35.46	-148.35	-3.21	9.66	-216.02

Viale Duca Alessandro n. 11 – 43123 Parma
Cell. 335 1403156 – E mail ing.concari@gmail.com
Sito web: studioaire.it – P.IVA 02561480340

3898.50												
3	327	3.276e+04	503.48	0.03	-31.46	0.0	-93.67	-342.56	-9.36	25.35	503.48	
3.276e+04												
		-1.024e+04	-619.76	4.93e-03	0.0	60.0	-93.67	-358.30	-9.36	25.35	-58.14	
1.173e+04												
						120.0	-93.67	-374.03	-9.36	25.35	-619.76	-
1.024e+04												
3	331	3.622e+04	559.26	0.03	-31.46	0.0	-103.38	-380.18	-10.39	27.97	559.26	
3.622e+04												
		-1.129e+04	-687.05	5.48e-03	0.0	60.0	-103.38	-395.91	-10.39	27.97	-63.90	
1.293e+04												
						120.0	-103.38	-411.64	-10.39	27.97	-687.05	-
1.129e+04												
3	333	1.499e+04	121.65	0.01	-31.46	0.0	-16.49	-125.45	2.21	11.49	-144.08	
1.499e+04												
		-1951.59	-144.08	-0.01	0.0	60.0	-16.49	-141.18	2.21	11.49	-11.21	
6991.07												
						120.0	-16.49	-156.91	2.21	11.49	121.65	-
1951.59												
3	339	2.979e+04	816.38	0.02	-31.46	0.0	-112.64	-334.00	-14.78	23.52	816.38	
2.979e+04												
		-1.218e+04	-957.43	0.02	0.0	60.0	-112.64	-349.74	-14.78	23.52	-70.53	
9273.49												
						120.0	-112.64	-365.47	-14.78	23.52	-957.43	-
1.218e+04												
3	347	3.296e+04	352.76	0.03	-31.46	0.0	-106.78	-379.63	-8.18	25.38	352.76	
3.296e+04												
		-1.448e+04	-628.94	6.44e-03	0.0	60.0	-109.13	-395.36	-8.18	25.38	-138.09	
9709.64												
						120.0	-111.48	-411.09	-8.18	25.38	-628.94	-
1.448e+04												
6	45	1.922e+05	398.97	0.14	-631.80	0.0	-542.42	-2093.06	6.12	198.57	-457.60	
1.922e+05												
		-1.450e+05	-457.60	-0.03	0.0	70.0	-554.76	-2408.96	6.12	198.57	-29.32	
3.465e+04												
						140.0	-567.09	-2724.86	6.12	198.57	398.97	-
1.450e+05												
6	103	2.060e+05	2905.83	0.16	-631.80	0.0	-378.95	-2025.86	88.51	190.61	-7758.13	
2.060e+05												
		-1.218e+05	-7758.13	-0.18	-24.67	70.0	-378.95	-2341.76	76.17	190.61	-1994.41	
5.313e+04												
						140.0	-378.95	-2657.66	63.84	190.61	2905.83	-
1.218e+05												
6	123	4.650e+04	2844.21	0.04	-98.31	0.0	17.73	-448.72	84.82	37.31	-7303.95	
4.650e+04												
		-2.320e+04	-7303.95	-0.10	-24.67	70.0	17.73	-497.87	72.49	37.31	-1798.13	
1.337e+04												
						140.0	17.73	-547.02	60.15	37.31	2844.21	-
2.320e+04												
6	143	1.657e+05	4411.22	0.13	-480.60	0.0	-264.32	-1643.62	137.50	144.60	-1.196e+04	
1.657e+05												
		-9.804e+04	-1.196e+04	-0.23	-41.12	70.0	-264.32	-1883.92	116.94	144.60	-3054.83	
4.225e+04												
						140.0	-264.32	-2124.22	96.38	144.60	4411.22	-
9.804e+04												
6	153	8.316e+04	1.163e+04	0.07	-299.91	0.0	-517.10	-2310.36	328.09	172.19	-3.467e+04	
8.316e+04												
		-2.350e+05	-3.467e+04	0.58	0.0	70.0	-517.10	-2460.31	328.09	172.19	-1.152e+04	-
7.065e+04												
						140.0	-517.10	-2610.27	328.09	172.19	1.163e+04	-
2.350e+05												
6	162	5.207e+04	4.253e+04	0.05	-299.91	0.0	-766.43	-1824.20	246.20	304.72	4.253e+04	
5.207e+04												
		-1.811e+05	8129.11	1.28	0.0	70.0	-766.43	-1974.15	246.20	304.72	2.533e+04	-
5.928e+04												
						140.0	-766.43	-2124.10	246.20	304.72	8129.11	-
1.811e+05												
6	163	1.375e+05	-7845.83	0.11	-299.91	0.0	337.57	-55.80	-238.33	-113.77	-4.334e+04	
1.375e+05												
		6.551e+04	-4.334e+04	-1.35	0.0	70.0	337.57	-205.76	-238.33	-113.77	-2.559e+04	
1.068e+05												
						140.0	337.57	-355.71	-238.33	-113.77	-7845.83	
6.551e+04												
6	166	5.272e+04	4.359e+04	0.05	-299.91	0.0	-623.47	-1863.08	234.52	300.12	4.359e+04	
5.272e+04												
		-1.895e+05	7705.28	1.22	0.0	70.0	-623.47	-2013.03	234.52	300.12	2.565e+04	-
6.313e+04												
						140.0	-623.47	-2162.98	234.52	300.12	7705.28	-
1.895e+05												
6	167	1.368e+05	-7422.01	0.11	-299.91	0.0	194.61	-16.92	-226.66	-109.17	-4.440e+04	
1.368e+05												
		7.387e+04	-4.440e+04	-1.30	0.0	70.0	194.61	-166.88	-226.66	-109.17	-2.591e+04	
1.106e+05												
						140.0	194.61	-316.83	-226.66	-109.17	-7422.01	
7.387e+04												
6	175	1.407e+05	6784.57	0.10	-299.91	0.0	232.85	-1240.60	175.31	-87.59	-3.897e+04	
1.407e+05												
		-8.229e+04	-3.897e+04	-1.01	0.0	70.0	232.85	-1390.55	175.31	-87.59	-1.609e+04	
3.447e+04												
						140.0	232.85	-1540.50	175.31	-87.59	6784.57	-
8.229e+04												
6	185	8.968e+04	5219.03	0.07	-299.91	0.0	-347.32	-1541.43	146.61	129.23	-1.547e+04	

Viale Duca Alessandro n. 11 – 43123 Parma
Cell. 335 1403156 – E mail ing.concari@gmail.com
Sito web: studioaire.it – P.IVA 02561480340

8.968e+04												
		-1.356e+05	-1.547e+04	0.24	0.0	70.0	-347.32	-1691.38	146.61	129.23	-5127.94	-
1.769e+04												
						140.0	-347.32	-1841.33	146.61	129.23	5219.03	-
1.356e+05												
6	194	7.603e+04	1.846e+04	0.06	-299.91	0.0	-456.97	-1328.03	109.96	187.69	1.846e+04	
7.603e+04												
		-1.119e+05	3617.41	0.54	0.0	70.0	-456.97	-1477.99	109.96	187.69	1.104e+04	-
1.270e+04												
						140.0	-456.97	-1627.94	109.96	187.69	3617.41	-
1.119e+05												
6	195	1.135e+05	-3334.13	0.09	-299.91	0.0	28.11	-551.97	-102.10	3.26	-1.928e+04	
1.135e+05												
		-3698.21	-1.928e+04	-0.61	0.0	70.0	28.11	-701.92	-102.10	3.26	-1.130e+04	
6.017e+04												
						140.0	28.11	-851.87	-102.10	3.26	-3334.13	-
3698.21												
6	198	7.629e+04	1.898e+04	0.06	-299.91	0.0	-393.85	-1344.87	104.35	185.65	1.898e+04	
7.629e+04												
		-1.156e+05	3424.98	0.52	0.0	70.0	-393.85	-1494.82	104.35	185.65	1.120e+04	-
1.439e+04												
						140.0	-393.85	-1644.77	104.35	185.65	3424.98	-
1.156e+05												
6	199	1.133e+05	-3141.70	0.09	-299.91	0.0	-35.01	-535.13	-96.49	5.29	-1.980e+04	
1.133e+05												
		-44.16	-1.980e+04	-0.59	0.0	70.0	-35.01	-685.09	-96.49	5.29	-1.147e+04	
6.187e+04												
						140.0	-35.01	-835.04	-96.49	5.29	-3141.70	-
44.16												
6	207	1.150e+05	3163.30	0.09	-299.91	0.0	-17.79	-1071.96	80.21	14.56	-1.740e+04	
1.150e+05												
		-6.859e+04	-1.740e+04	-0.46	0.0	70.0	-17.79	-1221.92	80.21	14.56	-7117.12	
2.844e+04												
						140.0	-17.79	-1371.87	80.21	14.56	3163.30	-
6.859e+04												
6	217	9.068e+04	4238.78	0.07	-299.91	0.0	-321.50	-1424.49	118.94	122.68	-1.255e+04	
9.068e+04												
		-1.204e+05	-1.255e+04	0.18	0.0	70.0	-321.50	-1574.44	118.94	122.68	-4156.17	-
9637.23												
						140.0	-321.50	-1724.39	118.94	122.68	4238.78	-
1.204e+05												
6	226	7.967e+04	1.479e+04	0.06	-299.91	0.0	-409.86	-1252.58	89.29	169.83	1.479e+04	
7.967e+04												
		-1.014e+05	2936.08	0.43	0.0	70.0	-409.86	-1402.53	89.29	169.83	8864.61	-
5612.97												
						140.0	-409.86	-1552.49	89.29	169.83	2936.08	-
1.014e+05												
6	227	1.099e+05	-2652.80	0.09	-299.91	0.0	-19.00	-627.42	-81.43	21.11	-1.561e+04	
1.099e+05												
		-1.422e+04	-1.561e+04	-0.50	0.0	70.0	-19.00	-777.37	-81.43	21.11	-9131.97	
5.309e+04												
						140.0	-19.00	-927.33	-81.43	21.11	-2652.80	-
1.422e+04												
6	230	7.988e+04	1.521e+04	0.06	-299.91	0.0	-358.98	-1266.16	84.79	168.16	1.521e+04	
7.988e+04												
		-1.043e+05	2784.35	0.41	0.0	70.0	-358.98	-1416.11	84.79	168.16	8998.96	-
6981.66												
						140.0	-358.98	-1566.06	84.79	168.16	2784.35	-
1.043e+05												
6	231	1.097e+05	-2501.07	0.09	-299.91	0.0	-69.88	-613.84	-76.92	22.78	-1.603e+04	
1.097e+05												
		-1.127e+04	-1.603e+04	-0.48	0.0	70.0	-69.88	-763.80	-76.92	22.78	-9266.33	
5.446e+04												
						140.0	-69.88	-913.75	-76.92	22.78	-2501.07	-
1.127e+04												
6	239	1.111e+05	2595.52	0.08	-299.91	0.0	-55.96	-1046.31	65.57	30.18	-1.411e+04	
1.111e+05												
		-6.651e+04	-1.411e+04	-0.37	0.0	70.0	-55.96	-1196.27	65.57	30.18	-5755.55	
2.752e+04												
						140.0	-55.96	-1346.22	65.57	30.18	2595.52	-
6.651e+04												
6	273	1.327e+05	273.19	0.10	-434.31	0.0	-371.94	-1442.01	4.28	137.46	-325.92	
1.327e+05												
		-9.955e+04	-325.92	-0.02	0.0	70.0	-380.16	-1659.17	4.28	137.46	-26.37	
2.419e+04												
						140.0	-388.38	-1876.32	4.28	137.46	273.19	-
9.955e+04												
6	303	1.419e+05	1944.43	0.11	-434.31	0.0	-262.96	-1397.21	59.20	132.16	-5192.94	
1.419e+05												
		-8.410e+04	-5192.94	-0.12	-16.45	70.0	-262.96	-1614.37	50.98	132.16	-1336.43	
3.651e+04												
						140.0	-262.96	-1831.52	42.76	132.16	1944.43	-
8.410e+04												
6	307	4.246e+04	1914.18	0.03	-98.31	0.0	-13.98	-415.74	57.05	37.59	-4921.44	
4.246e+04												
		-2.263e+04	-4921.44	-0.07	-16.45	70.0	-13.98	-464.89	48.83	37.59	-1215.80	
1.164e+04												
						140.0	-13.98	-514.05	40.60	37.59	1914.18	-
2.263e+04												
6	323	1.151e+05	2948.03	0.09	-333.51	0.0	-186.53	-1142.39	91.86	101.48	-7994.19	
1.151e+05												
		-6.822e+04	-7994.19	-0.16	-27.41	70.0	-186.53	-1309.14	78.16	101.48	-2043.37	

Viale Duca Alessandro n. 11 – 43123 Parma
Cell. 335 1403156 – E mail ing.concari@gmail.com
Sito web: studioaire.it – P.IVA 02561480340

2.926e+04											
						140.0	-186.53	-1475.89	64.45	101.48	2948.03 -
6.822e+04											
6	325	3.438e+04	54.12	0.03	-98.31	0.0	-77.42	-349.79	1.50	38.14	-156.41
3.438e+04											
		-2.147e+04	-156.41	-0.01	0.0	70.0	-77.42	-398.94	1.50	38.14	-51.15
8171.89											
						140.0	-77.42	-448.09	1.50	38.14	54.12 -
2.147e+04											
6	327	9.479e+04	141.64	0.07	-299.91	0.0	-214.43	-940.00	3.93	95.47	-409.00
9.479e+04											
		-5.781e+04	-409.00	-0.04	0.0	70.0	-214.43	-1089.95	3.93	95.47	-133.68
2.374e+04											
						140.0	-214.43	-1239.91	3.93	95.47	141.64 -
5.781e+04											
6	331	1.049e+05	156.22	0.08	-333.51	0.0	-237.27	-1038.37	4.34	105.03	-451.10
1.049e+05											
		-6.386e+04	-451.10	-0.04	0.0	70.0	-237.27	-1205.12	4.34	105.03	-147.44
2.633e+04											
						140.0	-237.27	-1371.88	4.34	105.03	156.22 -
6.386e+04											
6	335	3.591e+04	198.63	0.03	-98.31	0.0	-51.64	-352.56	3.87	39.37	-343.27
3.591e+04											
		-2.033e+04	-343.27	-5.96e-03	0.0	70.0	-51.64	-401.71	3.87	39.37	-72.32
9508.28											
						140.0	-51.64	-450.86	3.87	39.37	198.63 -
2.033e+04											
6	337	9.326e+04	-2.88	0.07	-299.91	0.0	-240.21	-937.23	1.57	94.24	-222.15
9.326e+04											
		-5.895e+04	-222.15	-0.04	0.0	70.0	-240.21	-1087.19	1.57	94.24	-112.51
2.240e+04											
						140.0	-240.21	-1237.14	1.57	94.24	-2.88 -
5.895e+04											
6	351	9.646e+04	665.31	0.07	-299.91	0.0	-210.47	-960.14	20.87	94.47	-1872.78
9.646e+04											
		-5.895e+04	-1872.78	-0.06	-5.48	70.0	-210.47	-1110.09	18.13	94.47	-507.79
2.400e+04											
						140.0	-210.47	-1260.05	15.39	94.47	665.31 -
5.895e+04											
7	71	1.500e+04	4760.13	-1.68e-03	390.43	0.0	76.80	-319.61	111.22	31.17	-7316.95
1.500e+04											
		-696.48	-7316.95	-0.03	-21.15	60.0	76.80	-124.39	100.64	31.17	-961.21
1680.57											
						120.0	76.80	70.82	90.07	31.17	4760.13
73.47											
7	79	1.849e+04	4907.67	-1.18e-03	416.84	0.0	72.91	-361.79	123.63	7.80	-7813.23
1.849e+04											
		-352.84	-7813.23	-0.04	-35.24	60.0	72.91	-153.37	106.01	7.80	-924.12
3031.66											
						120.0	72.91	55.05	88.39	7.80	4907.67
82.15											
7	101	3.214e+04	797.69	3.49e-03	546.44	0.0	33.61	-540.11	-4.69	32.31	797.69
3.214e+04											
		116.72	235.04	0.05	0.0	60.0	23.04	-266.89	-4.69	32.31	516.37
7933.51											
						120.0	12.46	6.33	-4.69	32.31	235.04
116.72											
7	119	1.971e+04	2890.49	1.76e-03	416.84	0.0	81.20	-371.99	55.06	57.54	-3716.74
1.971e+04											
		-197.23	-3716.74	0.02	0.0	60.0	70.63	-163.57	55.06	57.54	-413.13
3646.45											
						120.0	60.05	44.85	55.06	57.54	2890.49
84.69											
7	121	1.320e+04	4022.69	9.65e-03	88.03	0.0	-13.97	-153.72	-53.07	-14.83	4022.69
1.320e+04											
		31.95	-2346.31	0.06	0.0	60.0	-24.54	-109.70	-53.07	-14.83	838.19
5293.58											
						120.0	-35.11	-65.69	-53.07	-14.83	-2346.31
31.95											
7	162	3973.04	1.647e+04	0.01	260.83	0.0	254.27	-163.07	281.99	-83.65	-1.773e+04
3973.04											
		-2139.45	-1.773e+04	-0.13	0.0	60.0	254.27	-32.65	281.99	-83.65	-632.04 -
1895.07											
						120.0	254.27	97.76	281.99	-83.65	1.647e+04
61.74											
7	163	2.350e+04	1.546e+04	-5.81e-03	260.83	0.0	-215.53	-325.75	-245.75	133.74	1.546e+04
2.350e+04											
		47.76	-1.439e+04	0.14	0.0	60.0	-215.53	-195.34	-245.75	133.74	538.26
7859.19											
						120.0	-215.53	-64.92	-245.75	133.74	-1.439e+04
47.76											
7	182	45.88	-541.61	-0.03	260.83	0.0	9.62	-94.93	182.33	28.44	-1.199e+04 -
4202.28											
		-6277.15	-1.199e+04	-0.20	0.0	60.0	9.62	35.49	182.33	28.44	-6264.65 -
5990.66											
						120.0	9.62	165.90	182.33	28.44	-541.61
45.88											
7	183	3.167e+04	9719.46	0.04	260.83	0.0	29.12	-393.90	-146.09	21.65	9719.46
3.167e+04											
		63.63	2622.29	0.21	0.0	60.0	29.12	-263.48	-146.09	21.65	6170.88
1.195e+04											
						120.0	29.12	-133.07	-146.09	21.65	2622.29

Viale Duca Alessandro n. 11 – 43123 Parma
Cell. 335 1403156 – E mail ing.concari@gmail.com
Sito web: studioaire.it – P.IVA 02561480340

63.63												
7	194	9339.45	8077.62	6.15e-03	260.83	0.0	125.36	-207.79	139.13	-22.65	-8771.61	
9339.45												
		-586.03	-8771.61	-0.06	0.0	60.0	125.36	-77.37	139.13	-22.65	-347.00	
786.17												
						120.0	125.36	53.04	139.13	-22.65	8077.62	
57.82												
7	195	1.813e+04	6503.39	-2.30e-03	260.83	0.0	-86.62	-281.03	-102.89	72.74	6503.39	
1.813e+04												
		51.69	-5996.94	0.07	0.0	60.0	-86.62	-150.62	-102.89	72.74	253.22	
5177.95												
						120.0	-86.62	-20.20	-102.89	72.74	-5996.94	
51.69												
7	214	5545.54	275.55	-0.01	260.83	0.0	14.20	-176.17	94.01	26.73	-6161.17	
5545.54												
		-1594.49	-6161.17	-0.09	0.0	60.0	14.20	-45.75	94.01	26.73	-2942.81	-
1114.38												
						120.0	14.20	84.66	94.01	26.73	275.55	
50.63												
7	215	2.192e+04	3892.94	0.02	260.83	0.0	24.54	-312.66	-57.77	23.36	3892.94	
2.192e+04												
		58.88	1805.12	0.10	0.0	60.0	24.54	-182.24	-57.77	23.36	2849.03	
7078.50												
						120.0	24.54	-51.83	-57.77	23.36	1805.12	
58.88												
7	226	1.017e+04	6759.18	5.44e-03	260.83	0.0	105.30	-214.73	116.57	-13.38	-7352.26	
1.017e+04												
		-430.23	-7352.26	-0.05	0.0	60.0	105.30	-84.32	116.57	-13.38	-296.54	
1202.64												
						120.0	105.30	46.10	116.57	-13.38	6759.18	
57.22												
7	227	1.730e+04	5084.04	-1.88e-03	260.83	0.0	-66.56	-274.09	-80.33	63.47	5084.04	
1.730e+04												
		52.29	-4678.51	0.06	0.0	60.0	-66.56	-143.67	-80.33	63.47	202.77	
4761.48												
						120.0	-66.56	-13.26	-80.33	63.47	-4678.51	
52.29												
7	246	7103.81	412.41	-9.93e-03	260.83	0.0	15.05	-189.15	79.92	26.42	-5227.27	
7103.81												
		-1119.85	-5227.27	-0.07	0.0	60.0	15.05	-58.74	79.92	26.42	-2407.43	-
334.86												
						120.0	15.05	71.68	79.92	26.42	412.41	
51.39												
7	247	2.036e+04	2959.04	0.02	260.83	0.0	23.69	-299.67	-43.67	23.67	2959.04	
2.036e+04												
		58.12	1668.26	0.08	0.0	60.0	23.69	-169.26	-43.67	23.67	2313.65	
6298.98												
						120.0	23.69	-38.84	-43.67	23.67	1668.26	
58.12												
7	283	1.207e+04	3296.06	7.02e-04	289.63	0.0	53.49	-244.97	76.27	24.48	-5010.82	
1.207e+04												
		-341.89	-5010.82	-0.02	-14.10	60.0	53.49	-100.15	69.22	24.48	-645.91	
1721.09												
						120.0	53.49	44.67	62.18	24.48	3296.06	
56.57												
7	291	1.315e+04	3320.83	1.37e-03	289.63	0.0	49.52	-253.95	83.27	6.68	-5261.96	
1.315e+04												
		-205.89	-5261.96	-0.02	-23.50	60.0	49.52	-109.13	71.52	6.68	-618.12	
2261.39												
						120.0	49.52	35.68	59.78	6.68	3320.83	
57.80												
7	301	2.226e+04	478.66	3.05e-03	376.03	0.0	23.32	-372.83	-2.27	23.02	478.66	
2.226e+04												
		80.85	205.75	0.04	0.0	60.0	16.27	-184.82	-2.27	23.02	342.20	
5529.29												
						120.0	9.22	3.20	-2.27	23.02	205.75	
80.85												
7	305	1.087e+04	2548.94	8.24e-03	88.03	0.0	-7.03	-134.37	-33.25	-6.19	2548.94	
1.087e+04												
		28.89	-1441.56	0.04	0.0	60.0	-14.07	-90.36	-33.25	-6.19	553.69	
4129.76												
						120.0	-21.12	-46.34	-33.25	-6.19	-1441.56	
28.89												
7	311	1.397e+04	1976.05	1.90e-03	289.63	0.0	55.05	-260.75	37.56	39.84	-2530.97	
1.397e+04												
		-102.15	-2530.97	0.01	0.0	60.0	48.00	-115.94	37.56	39.84	-277.46	
2671.25												
						120.0	40.95	28.88	37.56	39.84	1976.05	
59.50												
7	325	6222.41	367.93	5.42e-03	88.03	0.0	6.86	-95.68	6.39	11.09	-398.55	
6222.41												
		22.77	-398.55	1.80e-03	0.0	60.0	6.86	-51.66	6.39	11.09	-15.31	
1802.13												
						120.0	6.86	-7.65	6.39	11.09	367.93	
22.77												
7	327	1.373e+04	1040.34	2.68e-03	260.83	0.0	19.37	-244.41	18.12	25.04	-1134.11	
1.373e+04												
		-7.26	-1134.11	4.75e-03	0.0	60.0	19.37	-114.00	18.12	25.04	-46.89	
2982.06												
						120.0	19.37	16.42	18.12	25.04	1040.34	
54.75												
7	333	7638.28	656.89	6.21e-03	88.03	0.0	-5.01	-107.46	-7.89	3.65	656.89	

Viale Duca Alessandro n. 11 – 43123 Parma
Cell. 335 1403156 – E mail ing.concari@gmail.com
Sito web: studioaire.it – P.IVA 02561480340

7638.28												
		24.45	-290.36	9.47e-03	0.0	60.0	-5.01	-63.45	-7.89	3.65	183.27	
2510.90												
						120.0	-5.01	-19.43	-7.89	3.65	-290.36	
24.45												
7	337	1.515e+04	382.05	3.47e-03	260.83	0.0	7.50	-256.20	3.84	17.61	-78.67	
1.515e+04												
		56.43	-78.67	0.01	0.0	60.0	7.50	-125.78	3.84	17.61	151.69	
3690.83												
						120.0	7.50	4.63	3.84	17.61	382.05	
56.43												
7	339	1.232e+04	1698.62	1.89e-03	260.83	0.0	31.24	-232.63	32.40	32.48	-2189.55	
1.232e+04												
		-125.46	-2189.55	-3.06e-03	0.0	60.0	31.24	-102.21	32.40	32.48	-245.47	
2273.29												
						120.0	31.24	28.20	32.40	32.48	1698.62	
53.08												
8	47	1.335e+04	4584.88	0.09	77.00	0.0	83.65	72.44	-74.00	-106.29	4584.88	
36.04												
		36.04	-4294.86	0.02	0.0	60.0	73.07	110.94	-74.00	-106.29	145.01	
5537.25												
						120.0	62.50	149.44	-74.00	-106.29	-4294.86	
1.335e+04												
8	63	1.288e+04	4870.51	0.06	77.00	0.0	91.99	68.53	-78.86	-80.30	4870.51	
34.50												
		34.50	-4592.36	0.01	0.0	60.0	81.41	107.03	-78.86	-80.30	139.07	
5301.19												
						120.0	70.84	145.53	-78.86	-80.30	-4592.36	
1.288e+04												
8	79	1.123e+04	4907.67	0.07	77.00	0.0	88.39	55.05	-72.91	-82.15	4907.67	7.80
		7.80	-3841.11	0.02	0.0	60.0	70.76	93.55	-72.91	-82.15	533.28	
4465.89												
						120.0	53.14	132.05	-72.91	-82.15	-3841.11	
1.123e+04												
8	121	-14.83	3136.22	0.04	59.23	0.0	-53.07	-65.69	35.11	-31.95	-2346.31	-
14.83												
		-4343.32	-2346.31	0.04	21.15	60.0	-53.07	-36.07	45.69	-31.95	77.76	-
3067.54												
						120.0	-53.07	-6.46	56.26	-31.95	3136.22	-
4343.32												
8	145	-8.32	3079.16	0.04	59.23	0.0	-47.02	-66.67	25.12	-32.71	-2049.29	-8.32
		-4454.40	-2049.29	0.05	35.24	60.0	-47.02	-37.05	42.74	-32.71	-13.72	-
3119.82												
						120.0	-47.02	-7.44	60.36	-32.71	3079.16	-
4454.40												
8	162	1.388e+04	1.647e+04	-3.08e-03	59.23	0.0	200.60	85.70	-251.17	-61.74	1.647e+04	-
83.65												
		-83.65	-1.444e+04	-0.08	0.0	60.0	200.60	115.32	-251.17	-61.74	1012.20	
6010.47												
						120.0	200.60	144.93	-251.17	-61.74	-1.444e+04	
1.388e+04												
8	163	133.74	1.187e+04	0.10	59.23	0.0	-164.35	-52.86	212.43	-47.76	-1.439e+04	
133.74												
		-2809.02	-1.439e+04	0.11	0.0	60.0	-164.35	-23.25	212.43	-47.76	-1255.94	-
2213.14												
						120.0	-164.35	6.37	212.43	-47.76	1.187e+04	-
2783.09												
8	182	2.056e+04	-541.61	0.02	59.23	0.0	112.58	141.19	-13.19	-45.88	-541.61	
28.44												
		28.44	-7272.54	-0.12	0.0	60.0	112.58	170.81	-13.19	-45.88	-3907.08	
9404.29												
						120.0	112.58	200.42	-13.19	-45.88	-7272.54	
2.056e+04												
8	183	21.65	4704.39	0.07	59.23	0.0	-76.34	-108.35	-25.55	-63.63	2622.29	
21.65												
		-9458.64	2622.29	0.14	0.0	60.0	-76.34	-78.74	-25.55	-63.63	3663.34	-
5606.96												
						120.0	-76.34	-49.12	-25.55	-63.63	4704.39	-
9458.64												
8	194	9285.68	8077.62	0.03	59.23	0.0	100.64	47.49	-123.93	-57.82	8077.62	-
22.65												
		-22.65	-7144.83	-0.03	0.0	60.0	100.64	77.10	-123.93	-57.82	466.39	
3743.05												
						120.0	100.64	106.72	-123.93	-57.82	-7144.83	
9285.68												
8	195	1812.73	4576.68	0.07	59.23	0.0	-64.40	-14.65	85.19	-51.69	-5996.94	
72.74												
		-158.61	-5996.94	0.06	0.0	60.0	-64.40	14.97	85.19	-51.69	-710.13	
54.27												
						120.0	-64.40	44.58	85.19	-51.69	4576.68	
1812.73												
8	214	1.240e+04	275.55	0.04	59.23	0.0	61.32	73.35	-15.81	-50.63	275.55	
26.73												
		26.73	-3985.49	-0.04	0.0	60.0	61.32	102.97	-15.81	-50.63	-1854.97	
5323.05												
						120.0	61.32	132.58	-15.81	-50.63	-3985.49	
1.240e+04												
8	215	23.36	1805.12	0.06	59.23	0.0	-25.08	-40.51	-22.93	-58.88	1805.12	
23.36												
		-1648.51	1417.34	0.07	0.0	60.0	-25.08	-10.90	-22.93	-58.88	1611.23	-
1525.72												
						120.0	-25.08	18.72	-22.93	-58.88	1417.34	-

Viale Duca Alessandro n. 11 – 43123 Parma
Cell. 335 1403156 – E mail ing.concari@gmail.com
Sito web: studioaire.it – P.IVA 02561480340

1297.88												
8	226	8573.88	6759.18	0.03	59.23	0.0	85.05	41.57	-104.13	-57.22	6759.18	-
13.38												
		-13.38	-6021.52	-0.02	0.0	60.0	85.05	71.19	-104.13	-57.22	368.83	
3391.79												
						120.0	85.05	100.80	-104.13	-57.22	-6021.52	
8573.88												
8	227	2524.54	3453.37	0.07	59.23	0.0	-48.81	-8.73	65.39	-52.29	-4678.51	
63.47												
		-17.60	-4678.51	0.05	0.0	60.0	-48.81	20.88	65.39	-52.29	-612.57	
405.54												
						120.0	-48.81	50.50	65.39	-52.29	3453.37	
2524.54												
8	246	1.109e+04	412.41	0.04	59.23	0.0	53.23	62.46	-16.36	-51.39	412.41	
26.42												
		26.42	-3473.74	-0.03	0.0	60.0	53.23	92.08	-16.36	-51.39	-1530.66	
4667.96												
						120.0	53.23	121.69	-16.36	-51.39	-3473.74	
1.109e+04												
8	247	23.67	1668.26	0.06	59.23	0.0	-16.99	-29.62	-22.38	-58.12	1668.26	
23.67												
		-870.63	905.59	0.06	0.0	60.0	-16.99	-6.20e-03	-22.38	-58.12	1286.93	-
870.63												
						120.0	-16.99	29.61	-22.38	-58.12	905.59	
11.99												
8	275	9251.93	3105.64	0.06	59.23	0.0	56.62	47.27	-50.25	-73.90	3105.64	
25.51												
		25.51	-2923.92	0.02	0.0	60.0	49.57	76.89	-50.25	-73.90	90.86	
3750.26												
						120.0	42.52	106.50	-50.25	-73.90	-2923.92	
9251.93												
8	283	8938.20	3296.06	0.05	59.23	0.0	62.18	44.67	-53.49	-56.57	3296.06	
24.48												
		24.48	-3122.26	9.63e-03	0.0	60.0	55.13	74.28	-53.49	-56.57	86.90	
3592.88												
						120.0	48.08	103.90	-53.49	-56.57	-3122.26	
8938.20												
8	291	7842.27	3320.83	0.05	59.23	0.0	59.78	35.68	-49.52	-57.80	3320.83	6.68
		6.68	-2621.42	0.01	0.0	60.0	48.03	65.30	-49.52	-57.80	349.71	
3036.01												
						120.0	36.28	94.91	-49.52	-57.80	-2621.42	
7842.27												
8	305	-6.19	1939.11	0.03	59.23	0.0	-33.25	-46.34	21.12	-28.89	-1441.56	-6.19
		-2178.26	-1441.56	0.03	14.10	60.0	-33.25	-16.72	28.17	-28.89	37.31	-
1898.14												
						120.0	-33.25	12.89	35.22	-28.89	1939.11	-
2013.16												
8	317	-1.85	1901.07	0.03	59.23	0.0	-29.22	-46.99	14.46	-29.39	-1243.55	-1.85
		-2237.62	-1243.55	0.04	23.50	60.0	-29.22	-17.38	26.21	-29.39	-23.68	-
1933.00												
						120.0	-29.22	12.24	37.95	-29.39	1901.07	-
2087.22												
8	325	2647.15	367.93	0.02	59.23	0.0	6.39	-7.65	-6.86	-22.77	367.93	
11.09												
		-48.11	-455.11	5.41e-03	0.0	60.0	6.39	21.97	-6.86	-22.77	-43.59	
440.65												
						120.0	6.39	51.58	-6.86	-22.77	-455.11	
2647.15												
8	327	5549.21	1040.34	0.05	59.23	0.0	18.12	16.42	-19.37	-54.75	1040.34	
25.04												
		25.04	-1284.07	0.01	0.0	60.0	18.12	46.03	-19.37	-54.75	-121.87	
1898.66												
						120.0	18.12	75.65	-19.37	-54.75	-1284.07	
5549.21												
8	333	1225.51	310.91	0.02	59.23	0.0	-7.89	-19.43	5.01	-24.45	-290.36	3.65
		-378.04	-290.36	8.34e-03	0.0	60.0	-7.89	10.18	5.01	-24.45	10.28	-
273.88												
						120.0	-7.89	39.80	5.01	-24.45	310.91	
1225.51												
8	339	6970.84	1698.62	0.05	59.23	0.0	32.40	28.20	-31.24	-53.08	1698.62	
32.48												
		32.48	-2050.10	0.01	0.0	60.0	32.40	57.82	-31.24	-53.08	-175.74	
2613.20												
						120.0	32.40	87.44	-31.24	-53.08	-2050.10	
6970.84												
9	7	0.0	47.60	-0.05	-515.24	0.0	-84.39	530.99	-0.40	83.82	47.60	-
3.280e+04												
		-3.280e+04	0.0	4.72e-03	0.0	60.0	-84.39	273.37	-0.40	83.82	23.80	-
8673.61												
						120.0	-84.39	15.75	-0.40	83.82	0.0	0.0
9	27	0.0	0.0	-0.02	-64.03	0.0	-34.45	137.49	0.19	13.96	-22.69	-
1.266e+04												
		-1.266e+04	-22.69	0.02	0.0	60.0	-34.45	105.47	0.19	13.96	-11.34	-
5367.87												
						120.0	-34.45	73.46	0.19	13.96	0.0	0.0
9	69	403.42	1877.24	-0.02	-366.43	0.0	-24.16	316.63	-15.64	79.26	1877.24	-
1.601e+04												
		-1.601e+04	0.0	-0.01	0.0	60.0	-24.16	133.42	-15.64	79.26	938.62	-
2508.66												
						120.0	-24.16	-49.80	-15.64	79.26	0.0	0.0
9	77	100.30	3063.59	-0.03	-385.64	0.0	-33.74	360.22	-25.53	91.71	3063.59	-
2.009e+04												

Viale Duca Alessandro n. 11 – 43123 Parma
Cell. 335 1403156 – E mail ing.concari@gmail.com
Sito web: studioaire.it – P.IVA 02561480340

		-2.009e+04	0.0	8.80e-03	0.0	60.0	-33.74	167.40	-25.53	91.71	1531.79	-4259.11
						120.0	-33.74	-25.42	-25.53	91.71	0.0	0.0
9	103	0.0	563.85	-0.04	-515.24	0.0	79.10	554.93	-4.70	86.45	563.85	-3.568e+04
		-3.568e+04	0.0	-0.03	0.0	60.0	79.10	297.31	-4.70	86.45	281.93	-1.011e+04
						120.0	79.10	39.69	-4.70	86.45	0.0	0.0
9	145	0.0	891.93	9.82e-04	-64.03	0.0	273.57	109.01	-7.43	25.03	891.93	-9239.80
		-9239.80	0.0	-0.07	0.0	60.0	273.57	77.00	-7.43	25.03	445.96	-3659.44
						120.0	273.57	44.98	-7.43	25.03	0.0	0.0
9	161	51.72	1.209e+04	-0.03	-236.83	0.0	-466.15	222.53	-100.77	88.03	1.209e+04	-1.249e+04
		-1.249e+04	0.0	0.03	0.0	60.0	-466.15	104.12	-100.77	88.03	6046.23	-2694.66
						120.0	-466.15	-14.30	-100.77	88.03	0.0	0.0
9	164	0.0	0.0	-0.02	-236.83	0.0	397.57	272.71	100.23	-1.56	-1.203e+04	-1.852e+04
		-1.852e+04	-1.203e+04	-0.04	0.0	60.0	397.57	154.30	100.23	-1.56	-6013.69	-5705.35
						120.0	397.57	35.88	100.23	-1.56	0.0	0.0
9	174	1633.63	0.0	-0.04	-236.83	0.0	-1309.92	156.26	40.12	88.58	-4814.57	-4541.65
		-4541.65	-4814.57	0.19	0.0	60.0	-1309.92	37.85	40.12	88.58	-2407.28	1281.64
						120.0	-1309.92	-80.57	40.12	88.58	0.0	0.0
9	175	0.0	4879.64	-5.80e-03	-236.83	0.0	1241.33	338.98	-40.66	-2.10	4879.64	-2.647e+04
		-2.647e+04	0.0	-0.20	0.0	60.0	1241.33	220.57	-40.66	-2.10	2439.82	-9681.64
						120.0	1241.33	102.15	-40.66	-2.10	0.0	0.0
9	193	0.0	5613.13	-0.03	-236.83	0.0	-228.27	236.99	-46.78	62.85	5613.13	-1.423e+04
		-1.423e+04	0.0	0.01	0.0	60.0	-228.27	118.58	-46.78	62.85	2806.56	-3562.04
						120.0	-228.27	0.16	-46.78	62.85	0.0	0.0
9	196	0.0	0.0	-0.02	-236.83	0.0	159.69	258.26	46.23	23.62	-5548.05	-1.678e+04
		-1.678e+04	-5548.05	-0.02	0.0	60.0	159.69	139.84	46.23	23.62	-2774.02	-4837.97
						120.0	159.69	21.43	46.23	23.62	0.0	0.0
9	206	241.68	0.0	-0.03	-236.83	0.0	-626.53	205.92	18.40	63.36	-2207.87	-1.050e+04
		-1.050e+04	-2207.87	0.09	0.0	60.0	-626.53	87.50	18.40	63.36	-1103.93	-1697.63
						120.0	-626.53	-30.91	18.40	63.36	0.0	0.0
9	207	0.0	2272.94	-0.02	-236.83	0.0	557.94	289.33	-18.94	23.11	2272.94	-2.051e+04
		-2.051e+04	0.0	-0.10	0.0	60.0	557.94	170.91	-18.94	23.11	1136.47	-6702.37
						120.0	557.94	52.50	-18.94	23.11	0.0	0.0
9	225	0.0	4581.53	-0.03	-236.83	0.0	-191.42	239.13	-38.18	59.03	4581.53	-1.449e+04
		-1.449e+04	0.0	8.31e-03	0.0	60.0	-191.42	120.71	-38.18	59.03	2290.76	-3690.24
						120.0	-191.42	2.30	-38.18	59.03	0.0	0.0
9	228	0.0	0.0	-0.02	-236.83	0.0	122.83	256.12	37.64	27.45	-4516.45	-1.652e+04
		-1.652e+04	-4516.45	-0.02	0.0	60.0	122.83	137.70	37.64	27.45	-2258.22	-4709.77
						120.0	122.83	19.29	37.64	27.45	0.0	0.0
9	238	124.52	0.0	-0.03	-236.83	0.0	-517.33	213.73	14.95	59.49	-1793.48	-1.144e+04
		-1.144e+04	-1793.48	0.07	0.0	60.0	-517.33	95.31	14.95	59.49	-896.74	-2166.27
						120.0	-517.33	-23.10	14.95	59.49	0.0	0.0
9	239	0.0	1858.56	-0.02	-236.83	0.0	448.74	281.52	-15.49	26.98	1858.56	-1.957e+04
		-1.957e+04	0.0	-0.08	0.0	60.0	448.74	163.10	-15.49	26.98	929.28	-6233.74
						120.0	448.74	44.69	-15.49	26.98	0.0	0.0
9	255	0.0	33.23	-0.03	-352.03	0.0	-57.89	366.63	-0.28	58.30	33.23	-2.287e+04
		-2.287e+04	0.0	2.90e-03	0.0	60.0	-57.89	190.61	-0.28	58.30	16.61	-6156.27
						120.0	-57.89	14.60	-0.28	58.30	0.0	0.0
9	259	0.0	0.0	-0.02	-64.03	0.0	-27.05	123.24	0.09	15.36	-11.40	-1.095e+04
		-1.095e+04	-11.40	0.01	0.0	60.0	-27.05	91.23	0.09	15.36	-5.70	-4513.23
						120.0	-27.05	59.21	0.09	15.36	0.0	0.0
9	281	109.91	1255.22	-0.02	-265.63	0.0	-20.18	242.67	-10.46	58.89	1255.22	-1.318e+04
		-1.318e+04	0.0	-9.18e-03	0.0	60.0	-20.18	109.86	-10.46	58.89	627.61	-2607.09
						120.0	-20.18	-22.96	-10.46	58.89	0.0	0.0
9	289	34.14	2043.88	-0.02	-265.63	0.0	-24.12	252.78	-17.03	63.56	2043.88	-1.440e+04
		-1.440e+04	0.0	5.62e-03	0.0	60.0	-24.12	119.96	-17.03	63.56	1021.94	-3213.27

Viale Duca Alessandro n. 11 – 43123 Parma
Cell. 335 1403156 – E mail ing.concari@gmail.com
Sito web: studioaire.it – P.IVA 02561480340

						120.0	-24.12	-12.85	-17.03	63.56	0.0	0.0
9	303	0.0	377.39	-0.03	-352.03	0.0	51.10	382.59	-3.14	60.05	377.39	-
2.479e+04												
		-2.479e+04	0.0	-0.02	0.0	60.0	51.10	206.57	-3.14	60.05	188.70	-
7113.80												
						120.0	51.10	30.56	-3.14	60.05	0.0	0.0
9	317	0.0	598.35	-5.68e-03	-64.03	0.0	178.31	104.26	-4.99	22.74	598.35	-
8669.48												
		-8669.48	0.0	-0.05	0.0	60.0	178.31	72.25	-4.99	22.74	299.17	-
3374.28												
						120.0	178.31	40.23	-4.99	22.74	0.0	0.0
9	325	0.0	11.18	-0.02	-64.03	0.0	-12.23	94.76	-0.09	18.14	11.18	-
7528.83												
		-7528.83	0.0	-1.83e-03	0.0	60.0	-12.23	62.74	-0.09	18.14	5.59	-
2803.95												
						120.0	-12.23	30.72	-0.09	18.14	0.0	0.0
9	327	0.0	32.54	-0.02	-236.83	0.0	-34.29	247.62	-0.27	43.24	32.54	-
1.550e+04												
		-1.550e+04	0.0	-4.85e-03	0.0	60.0	-34.29	129.21	-0.27	43.24	16.27	-
4200.00												
						120.0	-34.29	10.79	-0.27	43.24	0.0	0.0
9	335	0.0	0.0	-0.02	-64.03	0.0	-19.64	109.00	8.83e-04	16.75	-0.11	-
9238.11												
		-9238.11	-0.11	6.30e-03	0.0	60.0	-19.64	76.98	8.83e-04	16.75	-0.05	-
3658.59												
						120.0	-19.64	44.97	8.83e-04	16.75	0.0	0.0
9	339	0.0	21.25	-0.03	-236.83	0.0	-41.70	261.87	-0.18	41.84	21.25	-
1.721e+04												
		-1.721e+04	0.0	3.28e-03	0.0	60.0	-41.70	143.45	-0.18	41.84	10.62	-
5054.64												
						120.0	-41.70	25.04	-0.18	41.84	0.0	0.0
9	347	0.0	431.39	-0.02	-236.83	0.0	-33.30	246.98	-3.59	46.13	431.39	-
1.543e+04												
		-1.543e+04	0.0	-1.29e-03	0.0	60.0	-33.30	128.56	-3.59	46.13	215.69	-
4161.23												
						120.0	-33.30	10.15	-3.59	46.13	0.0	0.0
9	349	0.0	125.91	-0.01	-64.03	0.0	24.10	100.08	-1.05	18.72	125.91	-
8167.19												
		-8167.19	0.0	-8.75e-03	0.0	60.0	24.10	68.06	-1.05	18.72	62.95	-
3123.13												
						120.0	24.10	36.04	-1.05	18.72	0.0	0.0
10	7	5.421e+04	496.92	-0.04	-40.90	0.0	-220.33	656.77	-1.19	73.17	496.92	-
2.215e+04												
		-2.215e+04	354.50	0.02	0.0	60.0	-220.33	636.32	-1.19	73.17	425.71	
1.664e+04												
						120.0	-220.33	615.87	-1.19	73.17	354.50	
5.421e+04												
10	23	3.693e+04	827.92	-0.03	-40.90	0.0	-208.35	513.11	-7.96	57.81	827.92	-
2.219e+04												
		-2.219e+04	-126.82	0.04	0.0	60.0	-208.35	492.66	-7.96	57.81	350.55	
7985.68												
						120.0	-208.35	472.20	-7.96	57.81	-126.82	
3.693e+04												
10	45	6.603e+04	1135.64	-0.06	-40.90	0.0	-83.24	503.26	-15.97	69.86	1135.64	
8097.73												
		8097.73	-780.68	5.18e-03	0.0	60.0	-93.82	482.81	-15.97	69.86	177.48	
3.768e+04												
						120.0	-104.39	462.36	-15.97	69.86	-780.68	
6.603e+04												
10	81	3.410e+04	2223.12	-0.02	-31.46	0.0	95.93	-119.47	-41.77	11.16	2223.12	
3.410e+04												
		1.787e+04	-2788.71	0.03	0.0	60.0	78.31	-135.20	-41.77	11.16	-282.79	
2.646e+04												
						120.0	60.69	-150.93	-41.77	11.16	-2788.71	
1.787e+04												
10	83	2.273e+04	3219.17	-6.38e-03	-31.46	0.0	10.42	-113.20	-57.49	14.30	3219.17	
2.273e+04												
		7253.24	-3679.39	0.08	0.0	60.0	-7.20	-128.93	-57.49	14.30	-230.11	
1.546e+04												
						120.0	-24.83	-144.66	-57.49	14.30	-3679.39	
7253.24												
10	87	3.931e+04	3221.54	-0.03	-31.46	0.0	-84.06	226.89	-53.92	52.59	3221.54	
1.397e+04												
		1.397e+04	-3249.07	0.08	0.0	60.0	-101.68	211.15	-53.92	52.59	-13.76	
2.711e+04												
						120.0	-119.30	195.42	-53.92	52.59	-3249.07	
3.931e+04												
10	153	1.429e+05	8372.58	-0.04	-31.46	0.0	432.13	-1024.46	-158.57	30.86	8372.58	
1.429e+05												
		3.042e+04	-1.077e+04	0.61	0.0	60.0	432.13	-1040.19	-158.57	30.86	-1196.51	
8.713e+04												
						120.0	432.13	-1055.92	-158.57	30.86	-1.077e+04	
3.042e+04												
10	156	2.733e+04	1.154e+04	-0.03	-31.46	0.0	-605.66	1671.28	165.08	38.90	-8376.78	-
1.590e+05												
		-1.590e+05	-8376.78	-0.62	0.0	60.0	-605.66	1655.55	165.08	38.90	1582.69	-
6.536e+04												
						120.0	-605.66	1639.82	165.08	38.90	1.154e+04	
2.733e+04												
10	174	1.068e+05	3.507e+04	-0.08	-31.46	0.0	-282.98	1011.61	-622.89	12.75	3.507e+04	-
4.499e+04												
		-4.499e+04	-3.979e+04	-0.19	0.0	60.0	-282.98	995.88	-622.89	12.75	-2362.09	

Viale Duca Alessandro n. 11 – 43123 Parma
Cell. 335 1403156 – E mail ing.concari@gmail.com
Sito web: studioaire.it – P.IVA 02561480340

3.138e+04												
						120.0	-282.98	980.15	-622.89	12.75	-3.979e+04	
1.068e+05												
10	175	2.890e+04	4.057e+04	0.03	-31.46	0.0	109.45	-364.79	629.40	57.02	-3.507e+04	
2.890e+04												
		-4.906e+04	-3.507e+04	0.19	0.0	60.0	109.45	-380.52	629.40	57.02	2748.27	-
9608.13												
						120.0	109.45	-396.25	629.40	57.02	4.057e+04	-
4.906e+04												
10	188	2.851e+04	5159.75	-0.03	-31.46	0.0	-316.61	922.58	72.25	36.63	-3559.27	-
7.468e+04												
		-7.468e+04	-3559.27	-0.27	0.0	60.0	-316.61	906.84	72.25	36.63	800.24	-
2.261e+04												
						120.0	-316.61	891.11	72.25	36.63	5159.75	
2.851e+04												
10	189	5.822e+04	1.048e+04	-0.03	-31.46	0.0	144.05	-295.37	-184.58	33.36	1.048e+04	
5.822e+04												
		2.711e+04	-1.173e+04	0.25	0.0	60.0	144.05	-311.10	-184.58	33.36	-627.51	
4.314e+04												
						120.0	144.05	-326.83	-184.58	33.36	-1.173e+04	
2.711e+04												
10	192	3.064e+04	1.251e+04	-0.03	-31.46	0.0	-317.58	942.19	191.08	36.40	-1.048e+04	-
7.431e+04												
		-7.431e+04	-1.048e+04	-0.26	0.0	60.0	-317.58	926.46	191.08	36.40	1013.68	-
2.136e+04												
						120.0	-317.58	910.73	191.08	36.40	1.251e+04	
3.064e+04												
10	206	6.429e+04	1.589e+04	-0.05	-31.46	0.0	-178.83	647.45	-279.84	25.11	1.589e+04	-
2.534e+04												
		-2.534e+04	-1.774e+04	-0.09	0.0	60.0	-178.83	631.71	-279.84	25.11	-928.78	
1.994e+04												
						120.0	-178.83	615.98	-279.84	25.11	-1.774e+04	
6.429e+04												
10	207	9253.22	1.852e+04	2.20e-03	-31.46	0.0	5.30	-0.63	286.35	44.65	-1.589e+04	
9253.22												
		-6536.09	-1.589e+04	0.09	0.0	60.0	5.30	-16.36	286.35	44.65	1314.95	
1830.51												
						120.0	5.30	-32.09	286.35	44.65	1.852e+04	-
6536.09												
10	214	7.138e+04	6757.91	-0.06	-31.46	0.0	-182.06	712.83	116.27	24.34	-7192.50	-
2.412e+04												
		-2.412e+04	-7192.50	-0.04	0.0	60.0	-182.06	697.10	116.27	24.34	-217.30	
2.410e+04												
						120.0	-182.06	681.37	116.27	24.34	6757.91	
7.138e+04												
10	220	2.864e+04	4209.10	-0.03	-31.46	0.0	-272.31	807.48	58.46	36.29	-2845.80	-
6.179e+04												
		-6.179e+04	-2845.80	-0.22	0.0	60.0	-272.31	791.75	58.46	36.29	681.65	-
1.610e+04												
						120.0	-272.31	776.02	58.46	36.29	4209.10	
2.864e+04												
10	221	4.540e+04	8462.79	-0.02	-31.46	0.0	99.49	-176.02	-148.41	33.66	8462.79	
4.540e+04												
		2.743e+04	-9397.47	0.20	0.0	60.0	99.49	-191.75	-148.41	33.66	-467.34	
3.689e+04												
						120.0	99.49	-207.48	-148.41	33.66	-9397.47	
2.743e+04												
10	224	3.032e+04	1.017e+04	-0.03	-31.46	0.0	-273.02	822.84	154.92	36.10	-8466.99	-
6.149e+04												
		-6.149e+04	-8466.99	-0.21	0.0	60.0	-273.02	807.11	154.92	36.10	853.52	-
1.511e+04												
						120.0	-273.02	791.38	154.92	36.10	1.017e+04	
3.032e+04												
10	238	5.763e+04	1.289e+04	-0.05	-31.46	0.0	-162.03	588.48	-226.34	27.00	1.289e+04	-
2.218e+04												
		-2.218e+04	-1.431e+04	-0.07	0.0	60.0	-162.03	572.75	-226.34	27.00	-710.82	
1.819e+04												
						120.0	-162.03	557.02	-226.34	27.00	-1.431e+04	
5.763e+04												
10	239	6091.84	1.509e+04	-2.86e-03	-31.46	0.0	-11.50	58.34	232.84	42.76	-1.289e+04	
6091.84												
		126.38	-1.289e+04	0.07	0.0	60.0	-11.50	42.60	232.84	42.76	1097.00	
3581.05												
						120.0	-11.50	26.87	232.84	42.76	1.509e+04	
126.38												
10	246	6.322e+04	5572.88	-0.05	-31.46	0.0	-164.39	639.69	95.20	26.38	-5848.75	-
2.117e+04												
		-2.117e+04	-5848.75	-0.03	0.0	60.0	-164.39	623.96	95.20	26.38	-137.93	
2.150e+04												
						120.0	-164.39	608.22	95.20	26.38	5572.88	
6.322e+04												
10	255	3.755e+04	330.82	-0.03	-31.46	0.0	-151.26	455.06	-0.63	50.51	330.82	-
1.517e+04												
		-1.517e+04	255.32	0.01	0.0	60.0	-151.26	439.32	-0.63	50.51	293.07	
1.166e+04												
						120.0	-151.26	423.59	-0.63	50.51	255.32	
3.755e+04												
10	263	2.603e+04	551.48	-0.02	-31.46	0.0	-143.27	359.28	-5.14	40.27	551.48	-
1.520e+04												
		-1.520e+04	-65.56	0.03	0.0	60.0	-143.27	343.55	-5.14	40.27	242.96	
5887.68												
						120.0	-143.27	327.82	-5.14	40.27	-65.56	

Viale Duca Alessandro n. 11 – 43123 Parma
Cell. 335 1403156 – E mail ing.concari@gmail.com
Sito web: studioaire.it – P.IVA 02561480340

2.603e+04												
10	273	4.543e+04	756.63	-0.04	-31.46	0.0	-59.87	352.71	-10.48	48.31	756.63	
4992.71												
		4992.71	-501.47	3.36e-03	0.0	60.0	-66.92	336.98	-10.48	48.31	127.58	
2.568e+04												
						120.0	-73.96	321.25	-10.48	48.31	-501.47	
4.543e+04												
10	285	2.172e+04	1480.93	-0.02	-31.46	0.0	53.03	-36.62	-27.44	11.77	1480.93	
2.172e+04												
		1.544e+04	-1811.68	0.02	0.0	60.0	41.28	-52.35	-27.44	11.77	-165.38	
1.905e+04												
						120.0	29.53	-68.08	-27.44	11.77	-1811.68	
1.544e+04												
10	287	1.414e+04	2144.96	-6.59e-03	-31.46	0.0	-3.98	-32.44	-37.92	13.87	2144.96	
1.414e+04												
		8354.78	-2405.46	0.05	0.0	60.0	-15.73	-48.17	-37.92	13.87	-130.25	
1.172e+04												
						120.0	-27.48	-63.91	-37.92	13.87	-2405.46	
8354.78												
10	291	2.973e+04	2146.54	-0.02	-31.46	0.0	-66.96	194.28	-35.54	39.39	2146.54	
8299.96												
		8299.96	-2118.58	0.05	0.0	60.0	-78.71	178.55	-35.54	39.39	13.98	
1.948e+04												
						120.0	-90.46	162.82	-35.54	39.39	-2118.58	
2.973e+04												
10	325	1.056e+04	142.38	-9.30e-03	-31.46	0.0	-32.78	129.07	1.22	13.00	-3.46	-
3043.36												
		-3043.36	-3.46	-8.18e-04	0.0	60.0	-32.78	113.34	1.22	13.00	69.46	
4229.19												
						120.0	-32.78	97.61	1.22	13.00	142.38	
1.056e+04												
10	327	2.888e+04	388.28	-0.02	-31.46	0.0	-86.76	323.41	3.25	34.88	-2.10	-
8045.42												
		-8045.42	-2.10	-2.22e-03	0.0	60.0	-86.76	307.68	3.25	34.88	193.09	
1.089e+04												
						120.0	-86.76	291.95	3.25	34.88	388.28	
2.888e+04												
10	331	3.193e+04	429.26	-0.03	-31.46	0.0	-95.76	355.80	3.59	38.53	-1.88	-
8879.09												
		-8879.09	-1.88	-2.46e-03	0.0	60.0	-95.76	340.07	3.59	38.53	213.69	
1.200e+04												
						120.0	-95.76	324.34	3.59	38.53	429.26	
3.193e+04												
10	333	1.351e+04	389.79	-0.01	-31.46	0.0	-9.02	127.33	5.58	12.13	-280.14	
115.70												
		115.70	-280.14	-0.01	0.0	60.0	-9.02	111.60	5.58	12.13	54.83	
7283.82												
						120.0	-9.02	95.87	5.58	12.13	389.79	
1.351e+04												
10	337	3.183e+04	635.69	-0.03	-31.46	0.0	-63.01	321.67	7.62	34.01	-278.78	-
4886.35												
		-4886.35	-278.78	-0.02	0.0	60.0	-63.01	305.94	7.62	34.01	178.45	
1.394e+04												
						120.0	-63.01	290.21	7.62	34.01	635.69	
3.183e+04												
10	339	2.593e+04	274.58	-0.02	-31.46	0.0	-110.52	325.15	-1.11	35.75	274.58	-
1.120e+04												
		-1.120e+04	140.87	0.01	0.0	60.0	-110.52	309.42	-1.11	35.75	207.72	
7832.63												
						120.0	-110.52	293.69	-1.11	35.75	140.87	
2.593e+04												
10	345	1.083e+04	359.82	-9.39e-03	-31.46	0.0	-21.32	96.35	-5.56	12.97	359.82	
1150.62												
		1150.62	-307.81	6.91e-03	0.0	60.0	-23.67	80.62	-5.56	12.97	26.01	
6459.90												
						120.0	-26.02	64.89	-5.56	12.97	-307.81	
1.083e+04												
11	23	3.823e+04	735.67	0.05	385.64	0.0	-55.66	-511.43	-6.13	75.95	735.67	
3.823e+04												
		0.0	0.0	-0.02	0.0	60.0	-55.66	-318.61	-6.13	75.95	367.83	
1.333e+04												
						120.0	-55.66	-125.79	-6.13	75.95	0.0	0.0
11	25	5816.10	0.0	0.01	64.03	0.0	50.33	-80.48	2.42	27.35	-290.94	
5816.10												
		0.0	-290.94	0.03	0.0	60.0	50.33	-48.47	2.42	27.35	-145.47	
1947.59												
						120.0	50.33	-16.45	2.42	27.35	0.0	0.0
11	47	4.753e+04	0.0	0.06	515.24	0.0	-51.97	-653.74	9.19	114.00	-1102.74	
4.753e+04												
		0.0	-1102.74	-0.02	0.0	60.0	-51.97	-396.12	9.19	114.00	-551.37	
1.604e+04												
						120.0	-51.97	-138.50	9.19	114.00	0.0	0.0
11	81	7962.00	0.0	0.02	64.03	0.0	4.20	-98.37	26.18	46.26	-3142.05	
7962.00												
		0.0	-3142.05	-0.01	0.0	60.0	4.20	-66.35	26.18	46.26	-1571.03	
3020.54												
						120.0	4.20	-34.33	26.18	46.26	0.0	0.0
11	143	2.234e+04	0.0	0.04	385.64	0.0	-248.58	-378.95	3.79	89.30	-454.59	
2.234e+04												
		0.0	-454.59	0.04	0.0	60.0	-248.58	-186.13	3.79	89.30	-227.29	
5383.30												
						120.0	-248.58	6.69	3.79	89.30	0.0	0.0

Viale Duca Alessandro n. 11 – 43123 Parma
Cell. 335 1403156 – E mail ing.concari@gmail.com
Sito web: studioaire.it – P.IVA 02561480340

11	145	0.0	0.0	3.63e-03	64.03	0.0	-183.56	30.95	9.86	36.08	-1183.42	-
7555.97												
		-7555.97	-1183.42	0.07	0.0	60.0	-183.56	62.97	9.86	36.08	-591.71	-
4738.45												
						120.0	-183.56	94.98	9.86	36.08	0.0	0.0
11	161	2.481e+04	0.0	0.03	236.83	0.0	317.55	-325.13	92.46	115.46	-1.110e+04	
2.481e+04												
		0.0	-1.110e+04	-0.03	0.0	60.0	317.55	-206.72	92.46	115.46	-5547.52	
8850.67												
						120.0	317.55	-88.30	92.46	115.46	0.0	0.0
11	164	1.990e+04	1.155e+04	0.03	236.83	0.0	-323.08	-284.21	-96.27	-10.96	1.155e+04	
1.990e+04												
		0.0	0.0	0.04	0.0	60.0	-323.08	-165.80	-96.27	-10.96	5776.11	
6395.34												
						120.0	-323.08	-47.38	-96.27	-10.96	0.0	0.0
11	174	5.579e+04	5101.87	0.05	236.83	0.0	1253.09	-583.33	-42.52	39.65	5101.87	
5.579e+04												
		0.0	0.0	-0.19	0.0	60.0	1253.09	-464.92	-42.52	39.65	2550.93	
2.434e+04												
						120.0	1253.09	-346.50	-42.52	39.65	0.0	0.0
11	175	0.0	0.0	0.01	236.83	0.0	-1258.62	-26.01	38.71	64.84	-4644.70	-
1.109e+04												
		-1.126e+04	-4644.70	0.20	0.0	60.0	-1258.62	92.40	38.71	64.84	-2322.35	-
9096.53												
						120.0	-1258.62	210.82	38.71	64.84	0.0	0.0
11	182	6.084e+04	3116.02	0.05	236.83	0.0	1123.07	-625.40	-25.97	50.05	3116.02	
6.084e+04												
		0.0	0.0	-0.21	0.0	60.0	1123.07	-506.98	-25.97	50.05	1558.01	
2.687e+04												
						120.0	1123.07	-388.57	-25.97	50.05	0.0	0.0
11	183	0.0	0.0	8.08e-03	236.83	0.0	-1128.61	16.05	22.16	54.45	-2658.85	-
1.614e+04												
		-1.614e+04	-2658.85	0.21	0.0	60.0	-1128.61	134.47	22.16	54.45	-1329.43	-
1.162e+04												
						120.0	-1128.61	252.88	22.16	54.45	0.0	0.0
11	193	2.323e+04	0.0	0.03	236.83	0.0	140.91	-312.01	41.86	80.03	-5022.93	
2.323e+04												
		0.0	-5022.93	-0.01	0.0	60.0	140.91	-193.59	41.86	80.03	-2511.47	
8063.19												
						120.0	140.91	-75.18	41.86	80.03	0.0	0.0
11	196	2.147e+04	5480.10	0.03	236.83	0.0	-146.45	-297.34	-45.67	24.46	5480.10	
2.147e+04												
		0.0	0.0	0.02	0.0	60.0	-146.45	-178.92	-45.67	24.46	2740.05	
7182.83												
						120.0	-146.45	-60.51	-45.67	24.46	0.0	0.0
11	206	3.770e+04	2487.88	0.04	236.83	0.0	580.43	-432.61	-20.73	46.65	2487.88	
3.770e+04												
		0.0	0.0	-0.09	0.0	60.0	580.43	-314.19	-20.73	46.65	1243.94	
1.530e+04												
						120.0	580.43	-195.77	-20.73	46.65	0.0	0.0
11	207	6999.11	0.0	0.02	236.83	0.0	-585.97	-176.74	16.92	57.84	-2030.71	
6999.11												
		-914.57	-2030.71	0.10	0.0	60.0	-585.97	-58.33	16.92	57.84	-1015.36	-
52.91												
						120.0	-585.97	60.09	16.92	57.84	0.0	0.0
11	214	3.992e+04	1563.10	0.04	236.83	0.0	517.51	-451.09	-13.03	51.12	1563.10	
3.992e+04												
		0.0	0.0	-0.09	0.0	60.0	517.51	-332.68	-13.03	51.12	781.55	
1.641e+04												
						120.0	517.51	-214.26	-13.03	51.12	0.0	0.0
11	215	4780.52	0.0	0.02	236.83	0.0	-523.04	-158.25	9.22	53.37	-1105.93	
4780.52												
		-1558.98	-1105.93	0.10	0.0	60.0	-523.04	-39.84	9.22	53.37	-552.97	-
1162.20												
						120.0	-523.04	78.58	9.22	53.37	0.0	0.0
11	225	2.302e+04	0.0	0.03	236.83	0.0	113.59	-310.28	33.78	74.64	-4054.17	
2.302e+04												
		0.0	-4054.17	-8.31e-03	0.0	60.0	113.59	-191.87	33.78	74.64	-2027.09	
7959.59												
						120.0	113.59	-73.45	33.78	74.64	0.0	0.0
11	228	2.168e+04	4511.34	0.03	236.83	0.0	-119.12	-299.06	-37.59	29.86	4511.34	
2.168e+04												
		0.0	0.0	0.02	0.0	60.0	-119.12	-180.65	-37.59	29.86	2255.67	
7286.43												
						120.0	-119.12	-62.23	-37.59	29.86	0.0	0.0
11	238	3.484e+04	2071.17	0.04	236.83	0.0	472.92	-408.77	-17.26	47.73	2071.17	
3.484e+04												
		0.0	0.0	-0.07	0.0	60.0	472.92	-290.35	-17.26	47.73	1035.58	
1.387e+04												
						120.0	472.92	-171.93	-17.26	47.73	0.0	0.0
11	239	9859.85	0.0	0.02	236.83	0.0	-478.46	-200.58	13.45	56.77	-1614.00	
9859.85												
		-321.72	-1614.00	0.08	0.0	60.0	-478.46	-82.17	13.45	56.77	-807.00	
1377.46												
						120.0	-478.46	36.25	13.45	56.77	0.0	0.0
11	246	3.656e+04	1316.36	0.04	236.83	0.0	419.32	-423.10	-10.97	51.32	1316.36	
3.656e+04												
		0.0	0.0	-0.07	0.0	60.0	419.32	-304.69	-10.97	51.32	658.18	
1.473e+04												
						120.0	419.32	-186.27	-10.97	51.32	0.0	0.0
11	247	8139.57	0.0	0.02	236.83	0.0	-424.86	-186.25	7.16	53.18	-859.20	
8139.57												

Viale Duca Alessandro n. 11 – 43123 Parma
Cell. 335 1403156 – E mail ing.concari@gmail.com
Sito web: studioaire.it – P.IVA 02561480340

		-638.61	-859.20	0.08	0.0	60.0	-424.86	-67.83	7.16	53.18	-429.60		
517.33													
						120.0	-424.86	50.59	7.16	53.18	0.0	0.0	
11	257	6868.14	0.0	0.01	64.03	0.0	33.26	-89.25	1.39	25.42	-166.87		
6868.14													
		0.0	-166.87	0.02	0.0	60.0	33.26	-57.23	1.39	25.42	-83.43		
2473.61													
						120.0	33.26	-25.22	1.39	25.42	0.0	0.0	
11	263	2.668e+04	501.28	0.03	265.63	0.0	-37.22	-355.19	-4.18	53.51	501.28		
2.668e+04													
		0.0	0.0	-0.01	0.0	60.0	-37.22	-222.37	-4.18	53.51	250.64		
9357.94													
						120.0	-37.22	-89.56	-4.18	53.51	0.0	0.0	
11	275	3.289e+04	0.0	0.04	352.03	0.0	-34.77	-450.06	6.04	78.87	-724.33		
3.289e+04													
		0.0	-724.33	-0.02	0.0	60.0	-34.77	-274.05	6.04	78.87	-362.16		
1.116e+04													
						120.0	-34.77	-98.03	6.04	78.87	0.0	0.0	
11	285	8298.74	0.0	0.02	64.03	0.0	2.51	-101.17	17.23	38.03	-2067.61		
8298.74													
		0.0	-2067.61	-9.09e-03	0.0	60.0	2.51	-69.16	17.23	38.03	-1033.80		
3188.91													
						120.0	2.51	-37.14	17.23	38.03	0.0	0.0	
11	317	0.0	0.0	8.19e-03	64.03	0.0	-122.67	-14.96	6.35	31.24	-761.85	-	
2046.58													
		-2255.28	-761.85	0.05	0.0	60.0	-122.67	17.05	6.35	31.24	-380.93	-	
1983.75													
						120.0	-122.67	49.07	6.35	31.24	0.0	0.0	
11	323	1.609e+04	0.0	0.03	265.63	0.0	-165.83	-266.87	2.44	62.41	-292.22		
1.609e+04													
		0.0	-292.22	0.03	0.0	60.0	-165.83	-134.06	2.44	62.41	-146.11		
4058.95													
						120.0	-165.83	-1.24	2.44	62.41	0.0	0.0	
11	325	8972.22	81.28	0.02	64.03	0.0	-0.88	-106.78	-0.68	21.58	81.28		
8972.22													
		0.0	0.0	1.84e-03	0.0	60.0	-0.88	-74.77	-0.68	21.58	40.64		
3525.65													
						120.0	-0.88	-42.75	-0.68	21.58	0.0	0.0	
11	327	2.235e+04	228.58	0.03	236.83	0.0	-2.77	-304.67	-1.90	52.25	228.58		
2.235e+04													
		0.0	0.0	4.86e-03	0.0	60.0	-2.77	-186.26	-1.90	52.25	114.29		
7623.01													
						120.0	-2.77	-67.84	-1.90	52.25	0.0	0.0	
11	331	2.458e+04	253.13	0.03	265.63	0.0	-3.08	-337.65	-2.11	57.36	253.13		
2.458e+04													
		0.0	0.0	5.36e-03	0.0	60.0	-3.08	-204.84	-2.11	57.36	126.57		
8305.90													
						120.0	-3.08	-72.02	-2.11	57.36	0.0	0.0	
11	333	7920.18	0.0	0.02	64.03	0.0	16.19	-98.02	0.36	23.50	-42.79		
7920.18													
		0.0	-42.79	0.01	0.0	60.0	16.19	-66.00	0.36	23.50	-21.40		
2999.63													
						120.0	16.19	-33.99	0.36	23.50	0.0	0.0	
11	339	2.340e+04	352.66	0.03	236.83	0.0	-19.84	-313.44	-2.94	50.32	352.66		
2.340e+04													
		0.0	0.0	-3.31e-03	0.0	60.0	-19.84	-195.02	-2.94	50.32	176.33		
8149.03													
						120.0	-19.84	-76.61	-2.94	50.32	0.0	0.0	
11	345	9090.01	0.0	0.02	64.03	0.0	-4.30	-107.77	2.66	24.41	-318.72		
9090.01													
		0.0	-318.72	-2.31e-03	0.0	60.0	-4.30	-75.75	2.66	24.41	-159.36		
3584.54													
						120.0	-4.30	-43.73	2.66	24.41	0.0	0.0	
11	351	2.040e+04	89.73	0.03	236.83	0.0	-31.22	-288.41	-0.75	53.72	89.73		
2.040e+04													
		0.0	0.0	0.01	0.0	60.0	-31.22	-170.00	-0.75	53.72	44.87		
6647.37													
						120.0	-31.22	-51.58	-0.75	53.72	0.0	0.0	
12	47	-1.345e+04	4294.86	-8.41e-03	-6.42	0.0	77.86	-136.59	-5.93	-106.29	4294.86	-	
1.345e+04													
		-1.484e+04	4235.57	5.01e-04	0.0	5.0	76.97	-139.80	-5.93	-106.29	4265.22	-	
1.414e+04													
						10.0	76.09	-143.01	-5.93	-106.29	4235.57	-	
1.484e+04													
12	63	-1.295e+04	4658.25	-6.28e-03	-6.42	0.0	85.95	-100.64	6.59	-80.30	4592.36	-	
1.295e+04													
		-1.399e+04	4592.36	1.58e-03	0.0	5.0	85.06	-103.85	6.59	-80.30	4625.31	-	
1.347e+04													
						10.0	84.18	-107.06	6.59	-80.30	4658.25	-	
1.399e+04													
12	121	4477.56	-1972.91	-2.68e-03	-4.94	0.0	-48.40	18.39	117.21	-31.95	-3136.22		
4318.37													
		4318.37	-3136.22	-5.21e-03	-1.76	5.0	-48.40	15.92	116.33	-31.95	-2552.36		
4404.13													
						10.0	-48.40	13.45	115.45	-31.95	-1972.91		
4477.56													
12	145	4928.87	-961.70	-2.75e-03	-4.94	0.0	-39.58	52.42	213.22	-32.71	-3079.16		
4429.37													
		4429.37	-3079.16	-6.15e-03	-2.94	5.0	-39.58	49.95	211.75	-32.71	-2016.76		
4685.29													
						10.0	-39.58	47.48	210.28	-32.71	-961.70		
4928.87													

Viale Duca Alessandro n. 11 – 43123 Parma
Cell. 335 1403156 – E mail ing.concari@gmail.com
Sito web: studioaire.it – P.IVA 02561480340

12	162	-1.392e+04	1.444e+04	-4.80e-03	-4.94	0.0	212.08	-169.82	-896.44	-61.74	1.444e+04	-1.392e+04
		-1.544e+04	7443.93	9.31e-03	0.0	5.0	212.08	-172.29	-896.44	-61.74	1.094e+04	-1.468e+04
						10.0	212.08	-174.75	-896.44	-61.74	7443.93	-1.544e+04
12	163	2910.42	-5174.25	-4.05e-03	-4.94	0.0	-175.30	40.10	866.59	-47.76	-1.187e+04	2738.33
		2738.33	-1.187e+04	-0.01	0.0	5.0	-175.30	37.63	866.59	-47.76	-8524.39	2830.54
						10.0	-175.30	35.17	866.59	-47.76	-5174.25	2910.42
12	182	-2.061e+04	7272.54	-4.46e-03	-4.94	0.0	8.56	-253.13	-1010.64	-45.88	7272.54	-2.061e+04
		-2.310e+04	-4417.93	0.01	0.0	5.0	8.56	-255.60	-1010.64	-45.88	1427.30	-2.184e+04
						10.0	8.56	-258.07	-1010.64	-45.88	-4417.93	-2.310e+04
12	183	1.056e+04	6687.61	-4.39e-03	-4.94	0.0	28.22	123.42	980.79	-63.63	-4704.39	9420.42
		9420.42	-4704.39	-0.01	0.0	5.0	28.22	120.95	980.79	-63.63	991.61	9998.44
						10.0	28.22	118.48	980.79	-63.63	6687.61	1.056e+04
12	194	-9328.34	7144.83	-4.59e-03	-4.94	0.0	105.69	-111.95	-419.71	-57.82	7144.83	-9328.34
		-1.038e+04	3874.21	3.96e-03	0.0	5.0	105.69	-114.42	-419.71	-57.82	5509.52	-9849.30
						10.0	105.69	-116.89	-419.71	-57.82	3874.21	-1.038e+04
12	195	-1856.55	-1604.54	-4.26e-03	-4.94	0.0	-68.91	-17.76	389.87	-51.69	-4576.68	-1856.55
		-2148.79	-4576.68	-4.66e-03	0.0	5.0	-68.91	-20.23	389.87	-51.69	-3090.61	-1996.50
						10.0	-68.91	-22.70	389.87	-51.69	-1604.54	-2148.79
12	214	-1.244e+04	3985.49	-4.43e-03	-4.94	0.0	13.66	-150.82	-474.96	-50.63	3985.49	-1.244e+04
		-1.395e+04	-1475.85	4.38e-03	0.0	5.0	13.66	-153.29	-474.96	-50.63	1254.82	-1.319e+04
						10.0	13.66	-155.76	-474.96	-50.63	-1475.85	-1.395e+04
12	215	1414.50	3745.53	-4.42e-03	-4.94	0.0	23.12	21.10	445.11	-58.88	-1417.34	1257.20
		1257.20	-1417.34	-5.08e-03	0.0	5.0	23.12	18.64	445.11	-58.88	1164.09	1342.02
						10.0	23.12	16.17	445.11	-58.88	3745.53	1414.50
12	226	-8616.66	6021.52	-4.55e-03	-4.94	0.0	89.15	-102.98	-344.33	-57.22	6021.52	-8616.66
		-9598.68	3336.18	3.14e-03	0.0	5.0	89.15	-105.45	-344.33	-57.22	4678.85	-9101.50
						10.0	89.15	-107.92	-344.33	-57.22	3336.18	-9598.68
12	227	-2568.22	-1066.51	-4.30e-03	-4.94	0.0	-52.37	-26.73	314.48	-52.29	-3453.37	-2568.22
		-2932.72	-3453.37	-3.84e-03	0.0	5.0	-52.37	-29.20	314.48	-52.29	-2259.94	-2744.30
						10.0	-52.37	-31.67	314.48	-52.29	-1066.51	-2932.72
12	246	-1.113e+04	3473.74	-4.43e-03	-4.94	0.0	14.51	-134.38	-388.11	-51.39	3473.74	-1.113e+04
		-1.248e+04	-983.79	3.48e-03	0.0	5.0	14.51	-136.85	-388.11	-51.39	1244.97	-1.180e+04
						10.0	14.51	-139.32	-388.11	-51.39	-983.79	-1.248e+04
12	247	-47.70	3253.47	-4.42e-03	-4.94	0.0	22.27	4.67	358.26	-58.12	-905.59	-53.13
		-54.61	-905.59	-4.18e-03	0.0	5.0	22.27	2.20	358.26	-58.12	1173.94	-47.70
						10.0	22.27	-0.27	358.26	-58.12	3253.47	-54.61
12	275	-9318.91	2923.92	-5.85e-03	-4.94	0.0	52.77	-93.84	-4.67	-73.90	2923.92	-9318.91
		-1.028e+04	2877.23	3.16e-04	0.0	5.0	52.18	-96.31	-4.67	-73.90	2900.58	-9794.30
						10.0	51.59	-98.78	-4.67	-73.90	2877.23	-1.028e+04
12	283	-8991.52	3159.01	-4.43e-03	-4.94	0.0	58.16	-69.88	3.68	-56.57	3122.26	-8991.52
		-9714.97	3122.26	1.04e-03	0.0	5.0	57.57	-72.34	3.68	-56.57	3140.64	-9347.08
						10.0	56.99	-74.81	3.68	-56.57	3159.01	-9714.97
12	305	2018.86	-1181.48	-2.39e-03	-4.94	0.0	-30.10	5.31	76.35	-28.89	-1939.11	1990.48
		1990.48	-1939.11	-3.52e-03	-1.17	5.0	-30.10	2.84	75.76	-28.89	-1558.83	2010.84
						10.0	-30.10	0.37	75.18	-28.89	-1181.48	2018.86
12	317	2319.74	-507.34	-2.44e-03	-4.94	0.0	-24.23	27.99	140.35	-29.39	-1901.07	2064.49

Viale Duca Alessandro n. 11 – 43123 Parma
Cell. 335 1403156 – E mail ing.concari@gmail.com
Sito web: studioaire.it – P.IVA 02561480340

		2064.49	-1901.07	-4.15e-03	-1.96	5.0	-24.23	25.52	139.37	-29.39	-1201.76	2198.28
						10.0	-24.23	23.06	138.39	-29.39	-507.34	2319.74
12	325	-2665.29	455.11	-1.83e-03	-4.94	0.0	6.48	-20.86	-5.37	-22.77	455.11	-2665.29
		-2898.54	401.37	-1.34e-04	0.0	5.0	6.48	-23.33	-5.37	-22.77	428.24	-2775.74
						10.0	6.48	-25.79	-5.37	-22.77	401.37	-2898.54
12	327	-5592.44	1284.07	-4.43e-03	-4.94	0.0	18.39	-64.86	-14.92	-54.75	1284.07	-5592.44
		-6265.70	1134.84	-3.51e-04	0.0	5.0	18.39	-67.33	-14.92	-54.75	1209.46	-5922.90
						10.0	18.39	-69.79	-14.92	-54.75	1134.84	-6265.70
12	333	-1245.05	-310.91	-1.98e-03	-4.94	0.0	-7.71	-23.32	-9.84	-24.45	-310.91	-1245.05
		-1502.89	-409.27	-8.97e-04	0.0	5.0	-7.71	-25.78	-9.84	-24.45	-360.09	-1367.80
						10.0	-7.71	-28.25	-9.84	-24.45	-409.27	-1502.89
12	339	-7012.68	2050.10	-4.27e-03	-4.94	0.0	32.58	-62.40	-10.46	-53.08	2050.10	-7012.68
		-7661.35	1945.48	4.13e-04	0.0	5.0	32.58	-64.87	-10.46	-53.08	1997.79	-7330.85
						10.0	32.58	-67.33	-10.46	-53.08	1945.48	-7661.35
13	47	2.012e+04	2712.75	0.12	77.00	0.0	85.28	4.51	57.90	-106.29	-4235.57	1.496e+04
		1.496e+04	-4235.57	-0.05	0.0	60.0	74.71	43.01	57.90	-106.29	-761.41	1.638e+04
						120.0	64.14	81.51	57.90	-106.29	2712.75	2.012e+04
13	63	1.592e+04	3076.45	0.09	77.00	0.0	93.05	-23.14	64.46	-80.30	-4658.25	1.408e+04
		1.366e+04	-4658.25	-0.06	0.0	60.0	82.48	15.36	64.46	-80.30	-790.90	1.385e+04
						120.0	71.91	53.86	64.46	-80.30	3076.45	1.592e+04
13	79	1.593e+04	1832.00	0.09	77.00	0.0	95.51	-10.01	48.32	-82.15	-3966.12	1.251e+04
		1.244e+04	-3966.12	-0.05	0.0	60.0	77.88	28.49	48.32	-82.15	-1067.06	1.307e+04
						120.0	60.26	66.99	48.32	-82.15	1832.00	1.593e+04
13	119	1.583e+04	4149.85	0.10	77.00	0.0	58.59	3.92	59.80	-84.69	-4294.94	1.074e+04
		1.074e+04	-4294.94	-0.02	21.15	60.0	58.59	42.42	70.37	-84.69	-389.74	1.213e+04
						120.0	58.59	80.92	80.95	-84.69	4149.85	1.583e+04
13	121	4302.65	1972.91	0.03	59.23	0.0	-40.77	43.27	-37.74	-31.95	1972.91	-4443.58
		-4443.58	-1286.64	0.08	21.15	60.0	-40.77	72.89	-27.16	-31.95	25.94	-958.93
						120.0	-40.77	102.50	-16.59	-31.95	-1286.64	4302.65
13	145	4360.99	961.70	0.03	59.23	0.0	-29.72	47.50	-26.72	-32.71	961.70	-4892.80
		-4892.80	-253.53	0.08	35.24	60.0	-29.72	77.11	-9.10	-32.71	-112.79	-1154.37
						120.0	-29.72	106.73	8.52	-32.71	-129.95	4360.99
13	162	1.548e+04	-7443.93	0.07	59.23	0.0	207.20	-76.23	-170.84	-61.74	-7443.93	1.548e+04
		1.042e+04	-1.146e+04	-0.22	0.0	60.0	207.20	-46.62	-170.84	-61.74	-9450.08	1.206e+04
						120.0	207.20	-17.00	-170.84	-61.74	-1.146e+04	1.042e+04
13	163	9795.40	1.343e+04	0.06	59.23	0.0	-174.23	80.13	206.22	-47.76	5174.25	-2848.77
		-2848.77	5174.25	0.21	0.0	60.0	-174.23	109.75	206.22	-47.76	9303.41	2584.85
						120.0	-174.23	139.36	206.22	-47.76	1.343e+04	9795.40
13	174	2.072e+04	4947.29	0.07	59.23	0.0	170.36	-122.45	-187.99	-46.92	4947.29	2.072e+04
		9178.42	-1.313e+04	-0.17	0.0	60.0	170.36	-92.84	-187.99	-46.92	-4089.45	1.406e+04
						120.0	170.36	-63.22	-187.99	-46.92	-1.313e+04	9178.42
13	175	1.103e+04	1.510e+04	0.05	59.23	0.0	-137.38	126.36	223.38	-62.58	-7216.97	-8086.85
		-8086.85	-7216.97	0.16	0.0	60.0	-137.38	155.97	223.38	-62.58	3942.77	584.84
						120.0	-137.38	185.59	223.38	-62.58	1.510e+04	1.103e+04
13	182	2.313e+04	4417.93	0.07	59.23	0.0	-9.91	-141.99	-165.36	-45.88	4417.93	2.313e+04
		9107.28	-1.076e+04	-0.11	0.0	60.0	-9.91	-112.38	-165.36	-45.88	-3169.21	1.523e+04

Viale Duca Alessandro n. 11 – 43123 Parma
Cell. 335 1403156 – E mail ing.concari@gmail.com
Sito web: studioaire.it – P.IVA 02561480340

						120.0	-9.91	-82.76	-165.36	-45.88	-1.076e+04	9107.28
13	183	1.110e+04	1.273e+04	0.05	59.23	0.0	42.88	145.89	200.74	-63.63	-6687.61	-1.050e+04
		-1.050e+04	-6687.61	0.10	0.0	60.0	42.88	175.51	200.74	-63.63	3022.54	-585.41
						120.0	42.88	205.12	200.74	-63.63	1.273e+04	1.110e+04
13	194	1.043e+04	-3874.21	0.06	59.23	0.0	102.39	-33.14	-66.62	-57.82	-3874.21	1.043e+04
		9449.64	-4663.69	-0.10	0.0	60.0	102.39	-3.53	-66.62	-57.82	-4268.95	9449.64
						120.0	102.39	26.09	-66.62	-57.82	-4663.69	1.025e+04
13	195	9966.38	6640.02	0.06	59.23	0.0	-69.42	37.05	102.00	-51.69	1604.54	2205.17
		2205.17	1604.54	0.09	0.0	60.0	-69.42	66.66	102.00	-51.69	4122.28	5197.32
						120.0	-69.42	96.28	102.00	-51.69	6640.02	9966.38
13	205	1.071e+04	5039.50	0.06	59.23	0.0	-9.72	47.20	74.37	-61.13	-6293.55	1114.38
		1114.38	-6293.55	0.02	0.0	60.0	-9.72	76.82	74.37	-61.13	-627.02	5024.94
						120.0	-9.72	106.44	74.37	-61.13	5039.50	1.071e+04
13	207	1.054e+04	7481.59	0.06	59.23	0.0	-52.68	59.05	111.42	-58.39	-3933.74	-290.23
		-290.23	-3933.74	0.07	0.0	60.0	-52.68	88.67	111.42	-58.39	1773.92	4234.15
						120.0	-52.68	118.28	111.42	-58.39	7481.59	1.054e+04
13	214	1.399e+04	1475.85	0.07	59.23	0.0	4.22	-63.75	-66.02	-50.63	1475.85	1.399e+04
		9643.84	-4414.16	-0.05	0.0	60.0	4.22	-34.14	-66.02	-50.63	-1469.16	1.093e+04
						120.0	4.22	-4.52	-66.02	-50.63	-4414.16	9643.84
13	215	1.057e+04	6390.49	0.06	59.23	0.0	28.76	67.65	101.41	-58.88	-3745.53	-1356.41
		-1356.41	-3745.53	0.04	0.0	60.0	28.76	97.27	101.41	-58.88	1322.48	3717.35
						120.0	28.76	126.88	101.41	-58.88	6390.49	1.057e+04
13	226	1.022e+04	-3336.18	0.06	59.23	0.0	86.11	-26.46	-50.52	-57.22	-3336.18	9647.60
		9023.01	-3600.45	-0.08	0.0	60.0	86.11	3.15	-50.52	-57.22	-3468.32	9044.84
						120.0	86.11	32.77	-50.52	-57.22	-3600.45	1.022e+04
13	227	9992.87	5576.77	0.06	59.23	0.0	-53.13	30.37	85.90	-52.29	1066.51	2988.30
		2988.30	1066.51	0.07	0.0	60.0	-53.13	59.98	85.90	-52.29	3321.64	5602.12
						120.0	-53.13	89.60	85.90	-52.29	5576.77	9992.87
13	237	1.060e+04	4294.63	0.06	59.23	0.0	-4.72	38.86	63.92	-59.94	-5315.78	2074.13
		2074.13	-5315.78	0.02	0.0	60.0	-4.72	68.48	63.92	-59.94	-510.57	5448.60
						120.0	-4.72	98.09	63.92	-59.94	4294.63	1.060e+04
13	239	1.046e+04	6274.45	0.06	59.23	0.0	-39.54	48.41	93.84	-57.72	-3413.60	942.11
		942.11	-3413.60	0.05	0.0	60.0	-39.54	78.02	93.84	-57.72	1430.43	4810.68
						120.0	-39.54	107.64	93.84	-57.72	6274.45	1.046e+04
13	246	1.252e+04	983.79	0.07	59.23	0.0	6.54	-51.18	-50.11	-51.39	983.79	1.252e+04
		9690.22	-3394.97	-0.04	0.0	60.0	6.54	-21.57	-50.11	-51.39	-1205.59	1.024e+04
						120.0	6.54	8.05	-50.11	-51.39	-3394.97	9729.57
13	247	1.048e+04	5371.29	0.06	59.23	0.0	26.43	55.09	85.49	-58.12	-3253.47	111.56
		111.56	-3253.47	0.03	0.0	60.0	26.43	84.70	85.49	-58.12	1058.91	4408.47
						120.0	26.43	114.32	85.49	-58.12	5371.29	1.048e+04
13	275	1.400e+04	1855.09	0.09	59.23	0.0	57.63	0.75	39.44	-73.90	-2877.23	1.036e+04
		1.036e+04	-2877.23	-0.03	0.0	60.0	50.58	30.36	39.44	-73.90	-511.07	1.129e+04
						120.0	43.53	59.98	39.44	-73.90	1855.09	1.400e+04
13	283	1.121e+04	2097.56	0.07	59.23	0.0	62.81	-17.69	43.80	-56.57	-3159.01	9776.97
		9460.64	-3159.01	-0.04	0.0	60.0	55.76	11.93	43.80	-56.57	-530.73	9604.01
						120.0	48.71	41.54	43.80	-56.57	2097.56	1.121e+04

Viale Duca Alessandro n. 11 – 43123 Parma
Cell. 335 1403156 – E mail ing.concari@gmail.com
Sito web: studioaire.it – P.IVA 02561480340

13	291	1.121e+04	1267.92	0.07	59.23	0.0	64.44	-8.94	33.05	-57.80	-2697.59	
8732.16												
		8653.64	-2697.59	-0.03	0.0	60.0	52.70	20.68	33.05	-57.80	-714.83	
9084.41												
						120.0	40.95	50.29	33.05	-57.80	1267.92	
1.121e+04												
13	305	4348.04	1181.48	0.03	59.23	0.0	-25.24	23.19	-23.07	-28.89	1181.48	-
1989.02												
		-1989.02	-741.29	0.05	14.10	60.0	-25.24	52.81	-16.02	-28.89	8.63	
291.05												
						120.0	-25.24	82.42	-8.97	-28.89	-741.29	
4348.04												
13	311	1.115e+04	2813.15	0.07	59.23	0.0	39.83	0.35	40.70	-59.50	-2916.81	
7550.02												
		7550.02	-2916.81	-0.02	14.10	60.0	39.83	29.97	47.75	-59.50	-263.29	
8459.59												
						120.0	39.83	59.58	54.80	-59.50	2813.15	
1.115e+04												
13	317	4386.94	507.34	0.03	59.23	0.0	-17.88	26.01	-15.73	-29.39	507.34	-
2288.49												
		-2288.49	-123.82	0.05	23.50	60.0	-17.88	55.63	-3.98	-29.39	-83.85	
160.76												
						120.0	-17.88	85.24	7.77	-29.39	29.84	
4386.94												
13	325	4438.83	349.41	0.03	59.23	0.0	5.80	-16.96	6.26	-22.77	-401.37	
2920.12												
		2631.19	-401.37	-1.65e-03	0.0	60.0	5.80	12.66	6.26	-22.77	-25.98	
2791.01												
						120.0	5.80	42.27	6.26	-22.77	349.41	
4438.83												
13	327	1.011e+04	988.16	0.06	59.23	0.0	16.49	1.95	17.69	-54.75	-1134.84	
6317.95												
		6317.95	-1134.84	-4.99e-03	0.0	60.0	16.49	31.57	17.69	-54.75	-73.34	
7323.48												
						120.0	16.49	61.18	17.69	-54.75	988.16	
1.011e+04												
13	331	1.105e+04	1094.62	0.07	59.23	0.0	18.27	5.10	19.60	-60.08	-1257.08	
6884.25												
		6884.25	-1257.08	-5.55e-03	0.0	60.0	18.27	34.72	19.60	-60.08	-81.23	
8078.89												
						120.0	18.27	64.33	19.60	-60.08	1094.62	
1.105e+04												
13	333	4392.22	409.27	0.03	59.23	0.0	-7.35	-5.73	-6.35	-24.45	409.27	
1526.39												
		1495.92	-352.90	0.01	0.0	60.0	-7.35	23.88	-6.35	-24.45	28.19	
2070.85												
						120.0	-7.35	53.50	-6.35	-24.45	-352.90	
4392.22												
13	339	1.015e+04	1690.47	0.06	59.23	0.0	29.64	-9.27	30.30	-53.08	-1945.48	
7711.67												
		7627.93	-1945.48	-0.02	0.0	60.0	29.64	20.34	30.30	-53.08	-127.51	
8043.64												
						120.0	29.64	49.96	30.30	-53.08	1690.47	
1.015e+04												
14	23	1.765e+04	69.27	0.02	833.68	0.0	-535.18	-388.95	0.16	7.77	26.14	
1.005e+04												
		-1.458e+04	26.14	0.04	0.0	136.3	-310.96	27.89	0.16	7.77	47.71	-
1.455e+04												
						272.5	-86.73	444.73	0.16	7.77	69.27	
1.765e+04												
14	79	1.900e+04	1563.46	0.02	833.68	0.0	-343.12	-363.80	15.67	-210.32	1146.30	
4544.00												
		-1.709e+04	-5490.04	0.11	-80.04	136.3	-118.89	53.04	-24.35	-210.32	554.65	-
1.663e+04												
						272.5	105.33	469.88	-64.37	-210.32	-5490.04	
1.900e+04												
14	81	8336.74	1532.68	0.01	176.06	0.0	243.05	-28.23	15.51	-216.18	1123.65	-
7959.63												
		-8558.80	-5556.06	0.06	-80.04	136.3	290.40	59.80	-24.51	-216.18	510.31	-
5808.97												
						272.5	337.75	147.83	-64.53	-216.18	-5556.06	
8336.74												
14	101	3.215e+04	354.34	0.04	1115.63	0.0	218.87	-390.90	1.00	4.05	81.50	-
1.334e+04												
		-3.191e+04	81.50	-0.01	0.0	136.3	491.66	166.91	1.00	4.05	217.92	-
2.860e+04												
						272.5	764.46	724.73	1.00	4.05	354.34	
3.215e+04												
14	117	2.795e+04	328.76	0.04	856.43	0.0	422.66	-261.52	0.94	1.84	72.82	-
1.747e+04												
		-2.835e+04	72.82	-0.03	0.0	136.3	625.74	166.69	0.94	1.84	200.79	-
2.393e+04												
						272.5	828.82	594.91	0.94	1.84	328.76	
2.795e+04												
14	161	1.224e+04	7312.05	0.05	521.66	0.0	911.70	-78.07	-70.02	-1292.81	7312.05	-
2.962e+04												
		-3.260e+04	-1.244e+04	0.71	0.0	136.3	1052.00	182.77	-70.02	-1292.81	-2563.73	-
2.646e+04												
						272.5	1192.31	443.60	-70.02	-1292.81	-1.244e+04	
1.224e+04												
14	164	2.841e+04	1.250e+04	-0.02	521.66	0.0	-1096.16	-337.64	70.15	1302.27	-7284.63	
2.841e+04												

Viale Duca Alessandro n. 11 – 43123 Parma
Cell. 335 1403156 – E mail ing.concari@gmail.com
Sito web: studioaire.it – P.IVA 02561480340

		3613.80	-7284.63	-0.71	0.0	136.3	-955.85	-76.81	70.15	1302.27	2609.31	
4147.50												
						272.5	-815.55	184.02	70.15	1302.27	1.250e+04	
1.543e+04												
14	166	3142.82	6549.12	0.05	521.66	0.0	611.18	-136.12	-81.08	-1153.29	6549.12	-
2.115e+04												
		-2.883e+04	-1.481e+04	0.61	0.0	136.3	751.48	124.71	-81.08	-1153.29	-4129.34	-
2.677e+04												
						272.5	891.79	385.54	-81.08	-1153.29	-1.481e+04	
3142.82												
14	167	2.453e+04	1.487e+04	-0.01	521.66	0.0	-795.64	-279.58	81.21	1162.75	-6521.70	
1.994e+04												
		4455.82	-6521.70	-0.61	0.0	136.3	-655.33	-18.75	81.21	1162.75	4174.92	
4464.54												
						272.5	-515.03	242.08	81.21	1162.75	1.487e+04	
2.453e+04												
14	183	3.190e+04	8158.31	0.01	521.66	0.0	106.68	-139.16	42.36	108.92	-619.71	-
5851.36												
		-9740.80	-619.71	-0.13	0.0	136.3	246.99	121.67	42.36	108.92	3769.30	-
4745.07												
						272.5	387.29	382.50	42.36	108.92	8158.31	
3.190e+04												
14	193	1.321e+04	3218.92	0.03	521.66	0.0	352.28	-150.15	-30.64	-565.23	3218.92	-
1.345e+04												
		-2.039e+04	-5430.62	0.31	0.0	136.3	492.59	110.68	-30.64	-565.23	-1105.85	-
1.789e+04												
						272.5	632.89	371.51	-30.64	-565.23	-5430.62	
1.321e+04												
14	196	1.446e+04	5494.36	2.25e-03	521.66	0.0	-536.74	-265.56	30.77	574.69	-3191.50	
1.224e+04												
		-4418.11	-3191.50	-0.31	0.0	136.3	-396.44	-4.72	30.77	574.69	1151.43	-
4418.11												
						272.5	-256.13	256.11	30.77	574.69	5494.36	
1.446e+04												
14	198	9027.81	2881.01	0.03	521.66	0.0	216.19	-176.67	-35.65	-503.24	2881.01	-
9617.94												
		-1.929e+04	-6510.49	0.27	0.0	136.3	356.50	84.16	-35.65	-503.24	-1814.74	-
1.807e+04												
						272.5	496.80	344.99	-35.65	-503.24	-6510.49	
9027.81												
14	199	1.864e+04	6574.23	3.26e-03	521.66	0.0	-400.65	-239.04	35.78	512.69	-2853.59	
8411.12												
		-4606.01	-2853.59	-0.27	0.0	136.3	-260.35	21.80	35.78	512.69	1860.32	-
4244.31												
						272.5	-120.04	282.63	35.78	512.69	6574.23	
1.864e+04												
14	215	2.208e+04	3652.37	0.01	521.66	0.0	3.81	-175.79	18.83	49.41	-260.16	-
3149.24												
		-1.054e+04	-260.16	-0.06	0.0	136.3	144.12	85.04	18.83	49.41	1696.11	-
8303.27												
						272.5	284.42	345.87	18.83	49.41	3652.37	
2.208e+04												
14	225	1.334e+04	2596.11	0.03	521.66	0.0	266.59	-161.23	-24.66	-454.50	2596.11	-
1.097e+04												
		-1.865e+04	-4366.58	0.25	0.0	136.3	406.90	99.60	-24.66	-454.50	-885.24	-
1.659e+04												
						272.5	547.20	360.43	-24.66	-454.50	-4366.58	
1.334e+04												
14	228	1.433e+04	4430.32	4.94e-03	521.66	0.0	-451.05	-254.48	24.79	463.96	-2568.68	
9765.42												
		-5731.21	-2568.68	-0.25	0.0	136.3	-310.75	6.36	24.79	463.96	930.82	-
5723.72												
						272.5	-170.44	267.19	24.79	463.96	4430.32	
1.433e+04												
14	230	9948.49	2323.46	0.03	521.66	0.0	156.45	-182.73	-28.72	-404.45	2323.46	-
7872.04												
		-1.785e+04	-5242.69	0.22	0.0	136.3	296.75	78.10	-28.72	-404.45	-1459.62	-
1.673e+04												
						272.5	437.06	338.94	-28.72	-404.45	-5242.69	
9948.49												
14	231	1.772e+04	5306.43	5.72e-03	521.66	0.0	-340.91	-232.98	28.85	413.91	-2296.03	
6665.21												
		-5990.88	-2296.03	-0.22	0.0	136.3	-200.60	27.85	28.85	413.91	1505.20	-
5577.60												
						272.5	-60.30	288.68	28.85	413.91	5306.43	
1.772e+04												
14	247	2.051e+04	2954.20	0.01	521.66	0.0	-14.12	-181.86	15.20	40.64	-206.59	-
2675.67												
		-1.070e+04	-206.59	-0.05	0.0	136.3	126.18	78.97	15.20	40.64	1373.81	-
8851.50												
						272.5	266.49	339.80	15.20	40.64	2954.20	
2.051e+04												
14	263	1.260e+04	47.05	0.01	579.26	0.0	-360.27	-267.86	0.11	5.45	18.00	
6663.71												
		-1.016e+04	18.00	0.03	0.0	136.3	-204.48	21.77	0.11	5.45	32.53	-
1.010e+04												
						272.5	-48.68	311.41	0.11	5.45	47.05	
1.260e+04												
14	285	7636.96	1023.36	9.71e-03	176.06	0.0	153.32	-40.22	10.34	-143.46	750.54	-
5392.72												
		-6633.45	-3701.86	0.04	-53.36	136.3	200.67	47.81	-16.34	-143.46	342.02	-
4875.40												

Viale Duca Alessandro n. 11 – 43123 Parma
Cell. 335 1403156 – E mail ing.concari@gmail.com
Sito web: studioaire.it – P.IVA 02561480340

						272.5	248.03	135.84	-43.02	-143.46	-3701.86	7636.96
14	291	1.350e+04	1042.94	0.02	579.26	0.0	-232.23	-251.09	10.45	-139.95	764.78	2994.81
		-1.183e+04	-3659.16	0.07	-53.36	136.3	-76.43	38.54	-16.23	-139.95	370.49	-1.149e+04
						272.5	79.37	328.17	-42.91	-139.95	-3659.16	1.350e+04
14	301	2.227e+04	237.10	0.03	767.23	0.0	142.43	-269.16	0.67	2.97	54.91	-8924.96
		-2.173e+04	54.91	-9.84e-03	0.0	136.3	330.61	114.45	0.67	2.97	146.00	-1.947e+04
						272.5	518.78	498.07	0.67	2.97	237.10	2.227e+04
14	309	1.947e+04	220.04	0.03	594.43	0.0	278.29	-182.91	0.63	1.49	49.12	-1.168e+04
		-1.935e+04	49.12	-0.02	0.0	136.3	419.99	114.31	0.63	1.49	134.58	-1.636e+04
						272.5	561.69	411.52	0.63	1.49	220.04	1.947e+04
14	325	6237.42	6.53	4.42e-03	176.06	0.0	-26.13	-64.19	8.17e-03	1.99	4.31	-258.92
		-3445.47	4.31	1.35e-04	0.0	136.3	21.22	23.84	8.17e-03	1.99	5.42	-3008.27
						272.5	68.58	111.87	8.17e-03	1.99	6.53	6237.42
14	327	1.383e+04	31.87	0.02	521.66	0.0	-92.23	-207.85	0.07	4.73	13.71	-603.41
		-1.185e+04	13.71	1.07e-03	0.0	136.3	48.07	52.98	0.07	4.73	22.79	-1.115e+04
						272.5	188.38	313.81	0.07	4.73	31.87	1.383e+04
14	331	1.510e+04	36.09	0.02	579.26	0.0	-103.25	-231.79	0.08	5.18	15.28	-660.83
		-1.325e+04	15.28	1.23e-03	0.0	136.3	52.55	57.84	0.08	5.18	25.69	-1.251e+04
						272.5	208.35	347.47	0.08	5.18	36.09	1.510e+04
14	337	1.509e+04	26.39	0.02	521.66	0.0	36.28	-189.82	0.05	4.59	12.35	-4265.68
		-1.367e+04	12.35	-0.01	0.0	136.3	176.59	71.01	0.05	4.59	19.37	-1.236e+04
						272.5	316.89	331.84	0.05	4.59	26.39	1.509e+04
14	339	1.258e+04	37.35	0.01	521.66	0.0	-220.74	-225.88	0.08	4.86	15.07	3058.86
		-1.027e+04	15.07	0.02	0.0	136.3	-80.44	34.95	0.08	4.86	26.21	-9949.46
						272.5	59.87	295.78	0.08	4.86	37.35	1.258e+04
14	345	6216.98	208.96	4.81e-03	176.06	0.0	-21.08	-63.73	2.08	-27.07	153.88	-406.73
		-3545.52	-733.83	0.01	-10.67	136.3	26.27	24.31	-3.26	-27.07	73.56	-3092.40
						272.5	73.62	112.34	-8.59	-27.07	-733.83	6216.98
14	347	1.381e+04	221.36	0.02	521.66	0.0	-87.18	-207.38	2.14	-24.33	163.28	-751.23
		-1.195e+04	-708.49	0.01	-10.67	136.3	53.12	53.45	-3.20	-24.33	90.93	-1.124e+04
						272.5	193.43	314.28	-8.53	-24.33	-708.49	1.381e+04
15	47	1.767e+04	2867.05	-0.06	-1092.88	0.0	-523.50	458.79	-10.80	-157.66	-732.83	-8529.23
		-3.242e+04	-1059.79	-0.06	48.02	136.3	-229.56	-87.65	13.21	-157.66	-568.80	1.676e+04
						272.5	64.38	-634.09	37.22	-157.66	2867.05	-3.242e+04
15	77	1.715e+04	4063.06	-0.07	-833.68	0.0	-308.72	356.48	-20.20	-286.89	-1338.67	-3605.32
		-2.006e+04	-2033.13	-0.12	80.04	136.3	-84.50	-60.36	19.82	-286.89	-1364.33	1.657e+04
						272.5	139.73	-477.20	59.84	-286.89	4063.06	-2.006e+04
15	83	-365.37	4782.29	4.02e-03	-176.06	0.0	-150.12	64.29	-18.01	-265.83	-1216.08	-3561.37
		-1.003e+04	-1761.37	-0.10	80.04	136.3	-102.77	-23.75	22.01	-265.83	-943.41	-799.43
						272.5	-55.41	-111.78	62.03	-265.83	4782.29	-1.003e+04
15	103	3.210e+04	-105.64	-0.08	-1115.63	0.0	297.38	370.25	-1.84	-16.43	-105.64	1.541e+04
		-3.570e+04	-607.92	-0.02	0.0	136.3	570.18	-187.57	-1.84	-16.43	-356.78	2.786e+04
						272.5	842.97	-745.38	-1.84	-16.43	-607.92	-3.570e+04
15	141	4.311e+04	-293.36	-0.11	-871.60	0.0	1059.42	208.91	-5.27	-51.50	-293.36	3.630e+04
		-2.553e+04	-1728.55	-0.05	0.0	136.3	1248.40	-226.89	-5.27	-51.50	-1010.95	3.507e+04
						272.5	1437.38	-662.69	-5.27	-51.50	-1728.55	-2.553e+04

Viale Duca Alessandro n. 11 – 43123 Parma
Cell. 335 1403156 – E mail ing.concari@gmail.com
Sito web: studioaire.it – P.IVA 02561480340

15	166	-6272.34	1.673e+04	0.05	-521.66	0.0	-2328.89	467.04	95.34	-1388.88	-7425.06	-
6.460e+04												
		-6.460e+04	-7425.06	-0.72	0.0	136.3	-2188.58	206.21	95.34	-1388.88	4653.32	-
1.794e+04												
						272.5	-2048.28	-54.62	95.34	-1388.88	1.673e+04	-
6826.54												
15	167	5.853e+04	7397.13	-0.10	-521.66	0.0	1900.71	-36.78	-95.79	1386.10	7397.13	
5.853e+04												
		-2.415e+04	-1.688e+04	0.72	0.0	136.3	2041.02	-297.61	-95.79	1386.10	-4742.29	
3.496e+04												
						272.5	2181.32	-558.44	-95.79	1386.10	-1.688e+04	-
2.415e+04												
15	182	-4359.43	1.309e+04	0.10	-521.66	0.0	-3649.24	618.62	68.40	105.45	712.75	-
1.032e+05												
		-1.032e+05	712.75	-0.12	0.0	136.3	-3508.93	357.79	68.40	105.45	6901.17	-
3.602e+04												
						272.5	-3368.63	96.96	68.40	105.45	1.309e+04	-
4359.43												
15	183	9.716e+04	-740.67	-0.16	-521.66	0.0	3221.06	-188.36	-68.85	-108.23	-740.67	
9.716e+04												
		-2.661e+04	-1.324e+04	0.12	0.0	136.3	3361.37	-449.19	-68.85	-108.23	-6990.14	
5.305e+04												
						272.5	3501.67	-710.02	-68.85	-108.23	-1.324e+04	-
2.661e+04												
15	198	-2077.57	7328.16	8.73e-03	-521.66	0.0	-1161.03	327.93	41.82	-609.86	-3264.13	-
3.060e+04												
		-3.060e+04	-3264.13	-0.32	0.0	136.3	-1020.73	67.09	41.82	-609.86	2032.01	-
3339.95												
						272.5	-880.42	-193.74	41.82	-609.86	7328.16	-
1.162e+04												
15	199	2.714e+04	3236.21	-0.06	-521.66	0.0	732.86	102.33	-42.27	607.08	3236.21	
2.454e+04												
		-1.935e+04	-7478.18	0.32	0.0	136.3	873.16	-158.50	-42.27	607.08	-2120.99	
2.036e+04												
						272.5	1013.47	-419.33	-42.27	607.08	-7478.18	-
1.935e+04												
15	214	-6668.06	5781.96	0.03	-521.66	0.0	-1781.27	399.24	30.20	47.01	312.60	-
4.875e+04												
		-4.875e+04	312.60	-0.05	0.0	136.3	-1640.97	138.41	30.20	47.01	3047.28	-
1.181e+04												
						272.5	-1500.66	-122.42	30.20	47.01	5781.96	-
1.041e+04												
15	215	4.289e+04	-340.53	-0.09	-521.66	0.0	1353.09	31.02	-30.65	-49.79	-340.53	
4.268e+04												
		-2.056e+04	-5931.98	0.05	0.0	136.3	1493.40	-229.81	-30.65	-49.79	-3136.26	
2.883e+04												
						272.5	1633.71	-490.64	-30.65	-49.79	-5931.98	-
2.056e+04												
15	230	-526.11	5891.24	-0.01	-521.66	0.0	-978.60	306.20	33.65	-491.51	-2631.99	-
2.529e+04												
		-2.529e+04	-2631.99	-0.26	0.0	136.3	-838.29	45.37	33.65	-491.51	1629.63	-
1056.51												
						272.5	-697.99	-215.46	33.65	-491.51	5891.24	-
1.236e+04												
15	231	2.310e+04	2604.06	-0.06	-521.66	0.0	550.42	124.06	-34.10	488.73	2604.06	
1.923e+04												
		-1.861e+04	-6041.26	0.25	0.0	136.3	690.73	-136.77	-34.10	488.73	-1718.60	
1.808e+04												
						272.5	831.03	-397.60	-34.10	488.73	-6041.26	-
1.861e+04												
15	246	-5053.15	4649.51	0.02	-521.66	0.0	-1481.56	364.04	24.31	37.71	249.66	-
4.000e+04												
		-4.000e+04	249.66	-0.04	0.0	136.3	-1341.26	103.20	24.31	37.71	2449.58	-
7921.18												
						272.5	-1200.95	-157.63	24.31	37.71	4649.51	-
1.138e+04												
15	247	3.502e+04	-277.59	-0.08	-521.66	0.0	1053.39	66.22	-24.76	-40.49	-277.59	
3.394e+04												
		-1.959e+04	-4799.53	0.04	0.0	136.3	1193.69	-194.61	-24.76	-40.49	-2538.56	
2.494e+04												
						272.5	1334.00	-455.44	-24.76	-40.49	-4799.53	-
1.959e+04												
15	275	1.205e+04	1907.05	-0.04	-752.06	0.0	-358.25	314.44	-7.21	-105.21	-489.32	-
5829.05												
		-2.262e+04	-708.18	-0.04	32.02	136.3	-155.98	-61.60	8.79	-105.21	-381.74	
1.140e+04												
						272.5	46.30	-437.63	24.80	-105.21	1907.05	-
2.262e+04												
15	287	466.34	3177.41	-3.88e-03	-176.06	0.0	-123.21	64.30	-12.04	-177.47	-812.65	-
2731.49												
		-9197.74	-1178.39	-0.07	53.36	136.3	-75.85	-23.73	14.64	-177.47	-635.30	
32.91												
						272.5	-28.50	-111.76	41.32	-177.47	3177.41	-
9197.74												
15	289	1.170e+04	2704.39	-0.05	-579.26	0.0	-215.06	246.23	-13.48	-191.36	-893.22	-
2546.45												
		-1.437e+04	-1357.08	-0.08	53.36	136.3	-59.27	-43.40	13.20	-191.36	-912.09	
1.127e+04												
						272.5	96.53	-333.03	39.88	-191.36	2704.39	-
1.437e+04												
15	303	2.167e+04	-71.20	-0.05	-767.23	0.0	189.00	255.41	-1.24	-11.05	-71.20	
1.013e+04												

Viale Duca Alessandro n. 11 – 43123 Parma
Cell. 335 1403156 – E mail ing.concari@gmail.com
Sito web: studioaire.it – P.IVA 02561480340

		-2.481e+04	-409.59	-0.01	0.0	136.3	377.18	-128.21	-1.24	-11.05	-240.39	1.880e+04
						272.5	565.36	-511.82	-1.24	-11.05	-409.59	-2.481e+04
15	321	2.898e+04	-196.34	-0.07	-604.54	0.0	697.03	147.85	-3.52	-34.43	-196.34	2.406e+04
		-1.803e+04	-1156.68	-0.03	0.0	136.3	829.33	-154.42	-3.52	-34.43	-676.51	2.361e+04
						272.5	961.63	-456.69	-3.52	-34.43	-1156.68	-1.803e+04
15	325	2129.78	-5.79	-0.01	-176.06	0.0	-69.38	64.34	-0.10	-0.76	-5.79	-1071.74
		-7528.16	-32.35	-2.91e-04	0.0	136.3	-22.03	-23.69	-0.10	-0.76	-19.07	1697.57
						272.5	25.33	-111.72	-0.10	-0.76	-32.35	-7528.16
15	327	9011.97	-13.96	-0.04	-521.66	0.0	-214.09	215.13	-0.22	-1.39	-13.96	-3031.98
		-1.549e+04	-75.01	-8.91e-04	0.0	136.3	-73.78	-45.70	-0.22	-1.39	-44.49	8511.24
						272.5	66.52	-306.53	-0.22	-1.39	-75.01	-1.549e+04
15	339	7683.76	101.34	-0.03	-521.66	0.0	-246.16	212.63	0.31	4.09	15.63	-4061.97
		-1.720e+04	15.63	3.67e-03	0.0	136.3	-105.85	-48.20	0.31	4.09	58.49	7140.42
						272.5	34.45	-309.03	0.31	4.09	101.34	-1.720e+04
15	345	2105.64	567.28	-0.01	-176.06	0.0	-72.45	64.93	-2.61	-37.42	-174.26	-1156.49
		-7451.28	-261.53	-0.01	10.67	136.3	-25.09	-23.10	2.72	-37.42	-167.03	1693.64
						272.5	22.26	-111.13	8.06	-37.42	567.28	-7451.28
15	347	8997.93	524.62	-0.04	-521.66	0.0	-217.16	215.72	-2.74	-38.05	-182.44	-3116.73
		-1.541e+04	-278.33	-0.02	10.67	136.3	-76.85	-45.11	2.59	-38.05	-192.45	8507.30
						272.5	63.45	-305.94	7.93	-38.05	524.62	-1.541e+04
15	351	1.215e+04	-43.06	-0.04	-526.72	0.0	-34.74	196.05	-0.75	-6.66	-43.06	2203.80
		-1.614e+04	-247.60	-5.65e-03	0.0	136.3	100.87	-67.31	-0.75	-6.66	-145.33	1.097e+04
						272.5	236.47	-330.67	-0.75	-6.66	-247.60	-1.614e+04
18	67	0.0	1771.72	0.02	-64.03	0.0	58.50	-38.36	14.76	-20.19	0.0	0.0
		-8445.58	0.0	0.03	0.0	60.0	58.50	-70.38	14.76	-20.19	885.86	-3262.33
						120.0	58.50	-102.40	14.76	-20.19	1771.72	-8445.58
18	75	0.0	2861.61	0.03	-83.24	0.0	54.05	-55.24	23.85	-30.28	0.0	0.0
		-1.162e+04	0.0	0.02	0.0	60.0	54.05	-96.86	23.85	-30.28	1430.81	-4563.16
						120.0	54.05	-138.48	23.85	-30.28	2861.61	-1.162e+04
18	79	0.0	3084.84	0.05	-385.64	0.0	45.35	-87.37	25.71	-73.60	0.0	0.0
		-3.362e+04	0.0	0.02	0.0	60.0	45.35	-280.19	25.71	-73.60	1542.42	-1.103e+04
						120.0	45.35	-473.01	25.71	-73.60	3084.84	-3.362e+04
18	101	0.0	567.03	0.04	-515.24	0.0	-175.29	-158.69	4.73	-86.03	0.0	0.0
		-4.996e+04	0.0	-0.01	0.0	60.0	-175.29	-416.31	4.73	-86.03	283.52	-1.725e+04
						120.0	-175.29	-673.93	4.73	-86.03	567.03	-4.996e+04
18	125	0.0	425.40	0.03	-366.43	0.0	-187.24	-133.70	3.55	-63.76	0.0	0.0
		-3.803e+04	0.0	-0.03	0.0	60.0	-187.24	-316.92	3.55	-63.76	212.70	-1.352e+04
						120.0	-187.24	-500.13	3.55	-63.76	425.40	-3.803e+04
18	141	0.0	598.44	0.03	-385.64	0.0	-260.08	-174.20	4.99	-69.78	0.0	0.0
		-4.404e+04	0.0	-8.28e-03	0.0	60.0	-260.08	-367.02	4.99	-69.78	299.22	-1.624e+04
						120.0	-260.08	-559.84	4.99	-69.78	598.44	-4.404e+04
18	153	0.0	2.435e+04	0.03	-236.83	0.0	404.91	-79.43	202.88	-90.81	0.0	0.0
		-2.374e+04	0.0	-0.59	0.0	60.0	404.91	-197.85	202.88	-90.81	1.217e+04	-8318.47
						120.0	404.91	-316.26	202.88	-90.81	2.435e+04	-2.374e+04
18	156	0.0	0.0	0.03	-236.83	0.0	-422.35	-55.24	-199.55	11.34	0.0	0.0
		-2.084e+04	-2.395e+04	0.59	0.0	60.0	-422.35	-173.65	-199.55	11.34	-1.197e+04	-6866.75
						120.0	-422.35	-292.07	-199.55	11.34	-2.395e+04	-2.084e+04
18	178	6509.44	0.0	0.05	-236.83	0.0	959.34	160.31	-35.23	-28.10	0.0	0.0
		0.0	-4227.23	-0.29	0.0	60.0	959.34	41.90	-35.23	-28.10	-2113.62	6066.31
						120.0	959.34	-76.52	-35.23	-28.10	-4227.23	5027.70
18	179	0.0	4626.89	0.01	-236.83	0.0	-976.77	-294.98	38.56	-51.36	0.0	0.0

Viale Duca Alessandro n. 11 – 43123 Parma
Cell. 335 1403156 – E mail ing.concari@gmail.com
Sito web: studioaire.it – P.IVA 02561480340

		-4.961e+04	0.0	0.29	0.0	60.0	-976.77	-413.40	38.56	-51.36	2313.45	-
2.125e+04												
						120.0	-976.77	-531.82	38.56	-51.36	4626.89	-
4.961e+04												
18	182	7103.23	0.0	0.05	-236.83	0.0	945.70	167.51	-54.13	-27.22	0.0	0.0
		0.0	-6495.80	-0.27	0.0	60.0	945.70	49.09	-54.13	-27.22	-3247.90	
6498.16												
						120.0	945.70	-69.32	-54.13	-27.22	-6495.80	
5891.39												
18	183	0.0	6895.47	9.58e-03	-236.83	0.0	-963.14	-302.18	57.46	-52.24	0.0	0.0
		-5.047e+04	0.0	0.27	0.0	60.0	-963.14	-420.60	57.46	-52.24	3447.73	-
2.168e+04												
						120.0	-963.14	-539.01	57.46	-52.24	6895.47	-
5.047e+04												
18	185	0.0	1.083e+04	0.03	-236.83	0.0	173.42	-73.74	90.27	-62.20	0.0	0.0
		-2.306e+04	0.0	-0.26	0.0	60.0	173.42	-192.15	90.27	-62.20	5416.00	-
7976.64												
						120.0	173.42	-310.57	90.27	-62.20	1.083e+04	-
2.306e+04												
18	188	0.0	0.0	0.03	-236.83	0.0	-190.86	-60.94	-86.94	-17.26	0.0	0.0
		-2.152e+04	-1.043e+04	0.26	0.0	60.0	-190.86	-179.35	-86.94	-17.26	-5216.17	-
7208.58												
						120.0	-190.86	-297.77	-86.94	-17.26	-1.043e+04	-
2.152e+04												
18	210	329.66	0.0	0.04	-236.83	0.0	418.94	36.78	-16.14	-34.37	0.0	0.0
		-9796.30	-1937.30	-0.13	0.0	60.0	418.94	-81.64	-16.14	-34.37	-968.65	-
1345.69												
						120.0	418.94	-200.05	-16.14	-34.37	-1937.30	-
9796.30												
18	211	0.0	2336.96	0.02	-236.83	0.0	-436.38	-171.45	19.47	-45.10	0.0	0.0
		-3.478e+04	0.0	0.13	0.0	60.0	-436.38	-289.87	19.47	-45.10	1168.48	-
1.384e+04												
						120.0	-436.38	-408.28	19.47	-45.10	2336.96	-
3.478e+04												
18	214	398.33	0.0	0.04	-236.83	0.0	412.93	39.91	-24.42	-33.98	0.0	0.0
		-9421.07	-2930.61	-0.12	0.0	60.0	412.93	-78.51	-24.42	-33.98	-1465.30	-
1158.08												
						120.0	412.93	-196.92	-24.42	-33.98	-2930.61	-
9421.07												
18	215	0.0	3330.27	0.02	-236.83	0.0	-430.37	-174.58	27.75	-45.48	0.0	0.0
		-3.516e+04	0.0	0.12	0.0	60.0	-430.37	-292.99	27.75	-45.48	1665.13	-
1.403e+04												
						120.0	-430.37	-411.41	27.75	-45.48	3330.27	-
3.516e+04												
18	217	0.0	8771.41	0.03	-236.83	0.0	138.12	-72.69	73.10	-57.85	0.0	0.0
		-2.293e+04	0.0	-0.21	0.0	60.0	138.12	-191.11	73.10	-57.85	4385.71	-
7913.90												
						120.0	138.12	-309.52	73.10	-57.85	8771.41	-
2.293e+04												
18	220	0.0	0.0	0.03	-236.83	0.0	-155.56	-61.98	-69.76	-21.62	0.0	0.0
		-2.165e+04	-8371.75	0.21	0.0	60.0	-155.56	-180.40	-69.76	-21.62	-4185.87	-
7271.32												
						120.0	-155.56	-298.81	-69.76	-21.62	-8371.75	-
2.165e+04												
18	242	71.20	0.0	0.04	-236.83	0.0	335.92	16.89	-12.87	-35.39	0.0	0.0
		-1.218e+04	-1544.90	-0.10	0.0	60.0	335.92	-101.52	-12.87	-35.39	-772.45	-
2538.84												
						120.0	335.92	-219.94	-12.87	-35.39	-1544.90	-
1.218e+04												
18	243	0.0	1944.56	0.02	-236.83	0.0	-353.36	-151.57	16.20	-44.07	0.0	0.0
		-3.240e+04	0.0	0.10	0.0	60.0	-353.36	-269.98	16.20	-44.07	972.28	-
1.265e+04												
						120.0	-353.36	-388.40	16.20	-44.07	1944.56	-
3.240e+04												
18	246	90.04	0.0	0.04	-236.83	0.0	331.07	19.41	-19.54	-35.08	0.0	0.0
		-1.188e+04	-2344.61	-0.09	0.0	60.0	331.07	-99.01	-19.54	-35.08	-1172.31	-
2388.07												
						120.0	331.07	-217.42	-19.54	-35.08	-2344.61	-
1.188e+04												
18	247	0.0	2744.27	0.02	-236.83	0.0	-348.51	-154.08	22.87	-44.38	0.0	0.0
		-3.270e+04	0.0	0.09	0.0	60.0	-348.51	-272.49	22.87	-44.38	1372.14	-
1.280e+04												
						120.0	-348.51	-390.91	22.87	-44.38	2744.27	-
3.270e+04												
18	279	0.0	1205.24	0.02	-64.03	0.0	37.75	-41.90	10.04	-18.46	0.0	0.0
		-8870.00	0.0	0.02	0.0	60.0	37.75	-73.92	10.04	-18.46	602.62	-
3474.54												
						120.0	37.75	-105.93	10.04	-18.46	1205.24	-
8870.00												
18	287	0.0	1917.38	0.02	-64.03	0.0	35.53	-43.36	15.98	-22.18	0.0	0.0
		-9044.86	0.0	0.01	0.0	60.0	35.53	-75.37	15.98	-22.18	958.69	-
3561.97												
						120.0	35.53	-107.39	15.98	-22.18	1917.38	-
9044.86												
18	291	0.0	2066.20	0.03	-265.63	0.0	29.74	-64.78	17.22	-51.06	0.0	0.0
		-2.371e+04	0.0	0.01	0.0	60.0	29.74	-197.59	17.22	-51.06	1033.10	-
7871.22												
						120.0	29.74	-330.41	17.22	-51.06	2066.20	-
2.371e+04												
18	301	0.0	387.66	0.03	-352.03	0.0	-117.36	-112.32	3.23	-59.35	0.0	0.0
		-3.460e+04	0.0	-8.95e-03	0.0	60.0	-117.36	-288.34	3.23	-59.35	193.83	-
1.202e+04												

Viale Duca Alessandro n. 11 – 43123 Parma
Cell. 335 1403156 – E mail ing.concari@gmail.com
Sito web: studioaire.it – P.IVA 02561480340

						120.0	-117.36	-464.36	3.23	-59.35	387.66	-
3.460e+04												
18	309	0.0	307.69	0.03	-265.63	0.0	-126.08	-105.46	2.56	-47.50	0.0	0.0
		-2.859e+04	0.0	-0.02	0.0	60.0	-126.08	-238.27	2.56	-47.50	153.85	-
1.031e+04												
						120.0	-126.08	-371.09	2.56	-47.50	307.69	-
2.859e+04												
18	321	0.0	408.60	0.03	-265.63	0.0	-173.88	-122.66	3.40	-48.52	0.0	0.0
		-3.066e+04	0.0	-5.51e-03	0.0	60.0	-173.88	-255.48	3.40	-48.52	204.30	-
1.134e+04												
						120.0	-173.88	-388.29	3.40	-48.52	408.60	-
3.066e+04												
18	325	0.0	72.27	0.02	-64.03	0.0	-3.75	-48.98	0.60	-14.98	0.0	0.0
		-9718.85	0.0	1.12e-04	0.0	60.0	-3.75	-80.99	0.60	-14.98	36.14	-
3898.96												
						120.0	-3.75	-113.01	0.60	-14.98	72.27	-
9718.85												
18	327	0.0	199.83	0.03	-236.83	0.0	-8.72	-67.34	1.67	-39.73	0.0	0.0
		-2.229e+04	0.0	4.39e-04	0.0	60.0	-8.72	-185.75	1.67	-39.73	99.92	-
7592.61												
						120.0	-8.72	-304.17	1.67	-39.73	199.83	-
2.229e+04												
18	331	0.0	221.09	0.03	-265.63	0.0	-9.55	-70.40	1.84	-43.86	0.0	0.0
		-2.439e+04	0.0	4.94e-04	0.0	60.0	-9.55	-203.21	1.84	-43.86	110.55	-
8208.22												
						120.0	-9.55	-336.03	1.84	-43.86	221.09	-
2.439e+04												
18	335	0.0	92.51	0.02	-64.03	0.0	10.26	-46.08	0.77	-14.32	0.0	0.0
		-9371.62	0.0	0.01	0.0	60.0	10.26	-78.10	0.77	-14.32	46.25	-
3725.35												
						120.0	10.26	-110.11	0.77	-14.32	92.51	-
9371.62												
18	337	0.0	179.60	0.03	-236.83	0.0	-22.73	-70.23	1.50	-40.39	0.0	0.0
		-2.264e+04	0.0	-0.01	0.0	60.0	-22.73	-188.64	1.50	-40.39	89.80	-
7766.22												
						120.0	-22.73	-307.06	1.50	-40.39	179.60	-
2.264e+04												
18	345	0.0	436.44	0.02	-64.03	0.0	0.75	-48.55	3.64	-16.58	0.0	0.0
		-9667.39	0.0	-1.54e-03	0.0	60.0	0.75	-80.56	3.64	-16.58	218.22	-
3873.23												
						120.0	0.75	-112.58	3.64	-16.58	436.44	-
9667.39												
18	347	0.0	564.00	0.03	-236.83	0.0	-4.22	-66.91	4.70	-41.33	0.0	0.0
		-2.224e+04	0.0	-1.61e-03	0.0	60.0	-4.22	-185.32	4.70	-41.33	282.00	-
7566.88												
						120.0	-4.22	-303.74	4.70	-41.33	564.00	-
2.224e+04												
18	351	0.0	242.19	0.03	-236.83	0.0	-38.22	-77.09	2.02	-40.51	0.0	0.0
		-2.346e+04	0.0	2.24e-03	0.0	60.0	-38.22	-195.51	2.02	-40.51	121.09	-
8178.13												
						120.0	-38.22	-313.93	2.02	-40.51	242.19	-
2.346e+04												
19	5	2.833e+04	748.07	-7.40e-03	-6.42	0.0	-4.20	-281.53	-45.00	80.80	748.07	
2.833e+04												
		2.548e+04	298.11	-1.63e-03	0.0	5.0	-4.20	-284.74	-45.00	80.80	523.09	
2.691e+04												
						10.0	-4.20	-287.94	-45.00	80.80	298.11	
2.548e+04												
19	7	2.662e+04	593.15	-7.34e-03	-6.42	0.0	-4.43	-258.76	2.97	80.04	563.45	
2.662e+04												
		2.400e+04	563.45	2.37e-03	0.0	5.0	-4.43	-261.97	2.97	80.04	578.30	
2.532e+04												
						10.0	-4.43	-265.18	2.97	80.04	593.15	
2.400e+04												
19	45	2.860e+04	-441.57	-7.34e-03	-6.42	0.0	7.83	-281.77	-17.17	81.01	-441.57	
2.860e+04												
		2.575e+04	-613.31	-5.66e-05	0.0	5.0	6.94	-284.98	-17.17	81.01	-527.44	
2.718e+04												
						10.0	6.06	-288.19	-17.17	81.01	-613.31	
2.575e+04												
19	81	5810.35	-1597.87	-1.30e-03	-4.94	0.0	19.48	-59.44	18.07	15.51	-1778.53	
5810.35												
		5191.25	-1778.53	6.82e-04	0.0	5.0	18.01	-61.91	18.07	15.51	-1688.20	
5506.97												
						10.0	16.54	-64.38	18.07	15.51	-1597.87	
5191.25												
19	145	-1041.32	-1372.27	-2.02e-03	-4.94	0.0	14.46	-77.31	-201.36	22.25	-1372.27	-
1041.32												
		-1839.13	-3400.53	-6.14e-04	-2.94	5.0	14.46	-79.78	-202.83	22.25	-2382.73	-
1434.06												
						10.0	14.46	-82.25	-204.29	22.25	-3400.53	-
1839.13												
19	147	-2753.44	-1556.90	-1.96e-03	-4.94	0.0	14.23	-54.55	-153.39	21.49	-1556.90	-
2753.44												
		-3323.58	-3105.49	3.38e-03	-2.94	5.0	14.23	-57.01	-154.86	21.49	-2327.52	-
3032.34												
						10.0	14.23	-59.48	-156.33	21.49	-3105.49	-
3323.58												
19	161	1.685e+04	-1.180e+04	-3.78e-03	-4.94	0.0	150.71	-187.95	367.75	53.05	-1.180e+04	
1.685e+04												
		1.529e+04	-1.856e+04	4.44e-03	0.0	5.0	150.71	-190.42	367.75	53.05	-1.518e+04	
1.607e+04												

Viale Duca Alessandro n. 11 – 43123 Parma
Cell. 335 1403156 – E mail ing.concari@gmail.com
Sito web: studioaire.it – P.IVA 02561480340

						10.0	150.71	-192.88	367.75	53.05	-1.856e+04	1.529e+04
19	162	2.776e+04	-1.012e+04	-3.70e-03	-4.94	0.0	85.77	-144.83	783.44	45.58	-2.104e+04	2.776e+04
		2.641e+04	-2.104e+04	-2.69e-03	0.0	5.0	85.77	-147.30	783.44	45.58	-1.558e+04	2.709e+04
						10.0	85.77	-149.77	783.44	45.58	-1.012e+04	2.641e+04
19	163	-1457.16	2.167e+04	-3.49e-03	-4.94	0.0	-89.88	-117.02	-804.40	32.95	2.167e+04	-1457.16
		-2780.40	1.054e+04	3.04e-03	0.0	5.0	-89.88	-119.49	-804.40	32.95	1.611e+04	-2112.61
						10.0	-89.88	-121.96	-804.40	32.95	1.054e+04	-2780.40
19	164	9456.05	1.898e+04	-3.41e-03	-4.94	0.0	-154.82	-73.91	-388.71	25.48	1.244e+04	9456.05
		8344.49	1.244e+04	-4.08e-03	0.0	5.0	-154.82	-76.38	-388.71	25.48	1.571e+04	8906.44
						10.0	-154.82	-78.84	-388.71	25.48	1.898e+04	8344.49
19	182	3.897e+04	5136.34	-3.78e-03	-4.94	0.0	-28.34	-70.46	886.15	27.86	4556.54	3.897e+04
		3.787e+04	4556.54	-0.01	0.0	5.0	-28.34	-72.93	886.15	27.86	4846.44	3.843e+04
						10.0	-28.34	-75.40	886.15	27.86	5136.34	3.787e+04
19	183	-1.267e+04	-3924.51	-3.42e-03	-4.94	0.0	24.23	-191.39	-907.10	50.67	-3924.51	-1.267e+04
		-1.423e+04	-4713.90	0.01	0.0	5.0	24.23	-193.86	-907.10	50.67	-4319.20	-1.345e+04
						10.0	24.23	-196.33	-907.10	50.67	-4713.90	-1.423e+04
19	193	1.467e+04	-4937.33	-3.68e-03	-4.94	0.0	65.46	-156.27	155.88	45.34	-4937.33	1.467e+04
		1.323e+04	-8092.38	2.15e-03	0.0	5.0	65.46	-158.74	155.88	45.34	-6514.85	1.396e+04
						10.0	65.46	-161.21	155.88	45.34	-8092.38	1.323e+04
19	194	1.968e+04	-4264.88	-3.65e-03	-4.94	0.0	36.06	-136.77	338.81	42.04	-9129.87	1.968e+04
		1.834e+04	-9129.87	-1.15e-03	0.0	5.0	36.06	-139.24	338.81	42.04	-6697.37	1.902e+04
						10.0	36.06	-141.71	338.81	42.04	-4264.88	1.834e+04
19	195	6625.55	9761.89	-3.55e-03	-4.94	0.0	-40.17	-125.08	-359.77	36.49	9761.89	6625.55
		5291.70	4687.32	1.50e-03	0.0	5.0	-40.17	-127.55	-359.77	36.49	7224.60	5964.79
						10.0	-40.17	-130.02	-359.77	36.49	4687.32	5291.70
19	196	1.163e+04	8514.82	-3.52e-03	-4.94	0.0	-69.57	-105.58	-176.84	33.19	5569.35	1.163e+04
		1.040e+04	5569.35	-1.80e-03	0.0	5.0	-69.57	-108.05	-176.84	33.19	7042.09	1.102e+04
						10.0	-69.57	-110.52	-176.84	33.19	8514.82	1.040e+04
19	214	2.489e+04	2561.39	-3.69e-03	-4.94	0.0	-15.25	-103.76	386.50	34.22	2444.94	2.489e+04
		2.367e+04	2444.94	-6.25e-03	0.0	5.0	-15.25	-106.23	386.50	34.22	2503.17	2.428e+04
						10.0	-15.25	-108.69	386.50	34.22	2561.39	2.367e+04
19	215	1414.17	-1812.92	-3.51e-03	-4.94	0.0	11.14	-158.10	-407.46	44.31	-1812.92	1414.17
		-33.34	-2138.95	6.60e-03	0.0	5.0	11.14	-160.56	-407.46	44.31	-1975.93	696.58
						10.0	11.14	-163.03	-407.46	44.31	-2138.95	-33.34
19	225	1.436e+04	-3903.61	-3.66e-03	-4.94	0.0	52.42	-151.40	123.60	44.17	-3903.61	1.436e+04
		1.294e+04	-6490.05	1.79e-03	0.0	5.0	52.42	-153.87	123.60	44.17	-5196.83	1.365e+04
						10.0	52.42	-156.34	123.60	44.17	-6490.05	1.294e+04
19	226	1.843e+04	-3383.62	-3.64e-03	-4.94	0.0	28.57	-135.59	271.06	41.50	-7306.78	1.843e+04
		1.710e+04	-7306.78	-9.03e-04	0.0	5.0	28.57	-138.05	271.06	41.50	-5345.20	1.777e+04
						10.0	28.57	-140.52	271.06	41.50	-3383.62	1.710e+04
19	227	7873.21	7938.80	-3.56e-03	-4.94	0.0	-32.68	-126.27	-292.02	37.03	7938.80	7873.21
		6538.49	3806.06	1.26e-03	0.0	5.0	-32.68	-128.74	-292.02	37.03	5872.43	7212.02
						10.0	-32.68	-131.20	-292.02	37.03	3806.06	6538.49
19	228	1.194e+04	6912.49	-3.53e-03	-4.94	0.0	-56.53	-110.45	-144.56	34.36	4535.64	1.194e+04
		1.069e+04	4535.64	-1.43e-03	0.0	5.0	-56.53	-112.92	-144.56	34.36	5724.06	1.133e+04
						10.0	-56.53	-115.39	-144.56	34.36	6912.49	1.069e+04

Viale Duca Alessandro n. 11 – 43123 Parma
Cell. 335 1403156 – E mail ing.concari@gmail.com
Sito web: studioaire.it – P.IVA 02561480340

19	246	2.264e+04	2120.29	-3.67e-03	-4.94	0.0	-12.83	-108.98	309.53	35.19	2055.10	
2.264e+04												
		2.140e+04	2055.10	-5.02e-03	0.0	5.0	-12.83	-111.45	309.53	35.19	2087.70	
2.202e+04												
						10.0	-12.83	-113.92	309.53	35.19	2120.29	
2.140e+04												
19	247	3663.99	-1423.08	-3.52e-03	-4.94	0.0	8.72	-152.87	-330.49	43.34	-1423.08	
3663.99												
		2237.49	-1697.85	5.37e-03	0.0	5.0	8.72	-155.34	-330.49	43.34	-1560.46	
2956.91												
						10.0	8.72	-157.81	-330.49	43.34	-1697.85	
2237.49												
19	253	1.949e+04	513.63	-5.11e-03	-4.94	0.0	-2.89	-194.04	-30.57	55.84	513.63	
1.949e+04												
		1.752e+04	207.90	-1.08e-03	0.0	5.0	-2.89	-196.51	-30.57	55.84	360.77	
1.851e+04												
						10.0	-2.89	-198.97	-30.57	55.84	207.90	
1.752e+04												
19	255	1.835e+04	404.59	-5.07e-03	-4.94	0.0	-3.05	-178.86	1.40	55.33	390.55	
1.835e+04												
		1.653e+04	390.55	1.59e-03	0.0	5.0	-3.05	-181.33	1.40	55.33	397.57	
1.745e+04												
						10.0	-3.05	-183.80	1.40	55.33	404.59	
1.653e+04												
19	273	1.967e+04	-279.46	-5.08e-03	-4.94	0.0	5.13	-194.20	-12.03	55.98	-279.46	
1.967e+04												
		1.770e+04	-399.72	-2.98e-05	0.0	5.0	4.54	-196.67	-12.03	55.98	-339.59	
1.869e+04												
						10.0	3.95	-199.14	-12.03	55.98	-399.72	
1.770e+04												
19	285	5374.49	-1042.35	-1.31e-03	-4.94	0.0	12.76	-55.51	10.60	15.27	-1148.39	
5374.49												
		4794.71	-1148.39	4.74e-04	0.0	5.0	11.78	-57.98	10.60	15.27	-1095.37	
5090.77												
						10.0	10.80	-60.45	10.60	15.27	-1042.35	
4794.71												
19	317	806.71	-877.55	-1.80e-03	-4.94	0.0	9.41	-67.42	-135.68	19.76	-877.55	
806.71												
		107.79	-2244.13	-3.90e-04	-1.96	5.0	9.41	-69.89	-136.66	19.76	-1558.39	
463.42												
						10.0	9.41	-72.36	-137.64	19.76	-2244.13	
107.79												
19	319	-334.70	-1000.63	-1.76e-03	-4.94	0.0	9.26	-52.25	-103.70	19.26	-1000.63	-
334.70												
		-881.84	-2047.43	2.27e-03	-1.96	5.0	9.26	-54.71	-104.68	19.26	-1521.58	-
602.10												
						10.0	9.26	-57.18	-105.66	19.26	-2047.43	-
881.84												
19	325	4502.78	111.89	-1.35e-03	-4.94	0.0	-0.68	-47.65	-4.32	14.78	111.89	
4502.78												
		4001.64	68.68	5.96e-05	0.0	5.0	-0.68	-50.11	-4.32	14.78	90.29	
4258.38												
						10.0	-0.68	-52.58	-4.32	14.78	68.68	
4001.64												
19	327	1.315e+04	316.01	-3.60e-03	-4.94	0.0	-2.05	-130.93	-10.48	39.26	316.01	
1.315e+04												
		1.182e+04	211.22	1.76e-04	0.0	5.0	-2.05	-133.40	-10.48	39.26	263.62	
1.249e+04												
						10.0	-2.05	-135.86	-10.48	39.26	211.22	
1.182e+04												
19	331	1.459e+04	350.03	-3.97e-03	-4.94	0.0	-2.28	-144.81	-11.51	43.35	350.03	
1.459e+04												
		1.312e+04	234.98	1.96e-04	0.0	5.0	-2.28	-147.28	-11.51	43.35	292.50	
1.386e+04												
						10.0	-2.28	-149.74	-11.51	43.35	234.98	
1.312e+04												
19	337	1.363e+04	367.30	-3.61e-03	-4.94	0.0	-1.99	-137.25	-23.80	39.48	367.30	
1.363e+04												
		1.223e+04	129.26	-9.34e-04	0.0	5.0	-1.99	-139.72	-23.80	39.48	248.28	
1.293e+04												
						10.0	-1.99	-142.19	-23.80	39.48	129.26	
1.223e+04												
19	345	4562.98	-133.85	-1.34e-03	-4.94	0.0	1.99	-47.70	1.86	14.83	-152.47	
4562.98												
		4061.29	-152.47	4.09e-04	0.0	5.0	1.79	-50.17	1.86	14.83	-143.16	
4318.31												
						10.0	1.60	-52.64	1.86	14.83	-133.85	
4061.29												
19	349	3649.42	-98.30	-1.44e-03	-4.94	0.0	1.32	-50.08	-27.39	15.73	-98.30	
3649.42												
		3123.91	-374.21	2.36e-04	-0.39	5.0	1.32	-52.55	-27.59	15.73	-235.77	
3392.84												
						10.0	1.32	-55.02	-27.79	15.73	-374.21	
3123.91												
20	21	2.191e+04	195.62	0.03	-385.64	0.0	61.84	375.43	1.63	-57.98	0.0	0.0
		0.0	0.0	-0.04	0.0	60.0	61.84	182.61	1.63	-57.98	97.81	
1.674e+04												
						120.0	61.84	-10.21	1.63	-57.98	195.62	
2.191e+04												
20	45	2.709e+04	2475.35	0.04	-515.24	0.0	13.49	482.30	20.63	-81.75	0.0	0.0
		0.0	0.0	-0.03	0.0	60.0	13.49	224.68	20.63	-81.75	1237.68	
2.121e+04												

Viale Duca Alessandro n. 11 – 43123 Parma
Cell. 335 1403156 – E mail ing.concari@gmail.com
Sito web: studioaire.it – P.IVA 02561480340

						120.0	13.49	-32.94	20.63	-81.75	2475.35	
2.696e+04												
20	79	1.697e+04	3924.40	0.04	-385.64	0.0	-67.06	330.31	32.70	-68.79	0.0	0.0
		0.0	0.0	0.02	0.0	60.0	-67.06	137.49	32.70	-68.79	1962.20	
1.403e+04												
						120.0	-67.06	-55.33	32.70	-68.79	3924.40	
1.650e+04												
20	83	1605.68	3733.15	0.02	-64.03	0.0	-82.39	41.42	31.11	-24.96	0.0	0.0
		0.0	0.0	0.02	0.0	60.0	-82.39	9.40	31.11	-24.96	1866.58	
1524.66												
						120.0	-82.39	-22.61	31.11	-24.96	3733.15	
1128.39												
20	141	1.674e+04	1248.88	0.03	-385.64	0.0	187.63	328.11	10.41	-67.41	0.0	0.0
		0.0	0.0	-8.73e-03	0.0	60.0	187.63	135.29	10.41	-67.41	624.44	
1.390e+04												
						120.0	187.63	-57.53	10.41	-67.41	1248.88	
1.623e+04												
20	147	1.32	1125.49	0.01	-64.03	0.0	122.79	2.18	9.38	-23.03	0.0	0.0
		-3580.61	0.0	0.04	0.0	60.0	122.79	-29.84	9.38	-23.03	562.74	-
829.84												
						120.0	122.79	-61.85	9.38	-23.03	1125.49	-
3580.61												
20	157	1.209e+04	2.445e+04	0.02	-236.83	0.0	-385.43	218.49	203.73	-85.17	0.0	0.0
		0.0	0.0	-0.46	0.0	60.0	-385.43	100.08	203.73	-85.17	1.222e+04	
9556.99												
						120.0	-385.43	-18.34	203.73	-85.17	2.445e+04	
1.201e+04												
20	160	1.053e+04	0.0	0.03	-236.83	0.0	411.66	203.92	-201.07	12.39	0.0	0.0
		0.0	-2.413e+04	0.46	0.0	60.0	411.66	85.51	-201.07	12.39	-1.206e+04	
8682.78												
						120.0	411.66	-32.91	-201.07	12.39	-2.413e+04	
1.026e+04												
20	174	2.895e+04	0.0	0.05	-236.83	0.0	-939.11	359.63	-64.76	-15.98	0.0	0.0
		0.0	-7770.90	0.15	0.0	60.0	-939.11	241.21	-64.76	-15.98	-3885.45	
1.803e+04												
						120.0	-939.11	122.80	-64.76	-15.98	-7770.90	
2.895e+04												
20	175	995.42	8090.43	3.77e-03	-236.83	0.0	965.34	62.78	67.42	-56.81	0.0	0.0
		-6675.69	0.0	-0.15	0.0	60.0	965.34	-55.63	67.42	-56.81	4045.21	
214.61												
						120.0	965.34	-174.05	67.42	-56.81	8090.43	-
6675.69												
20	182	3.410e+04	0.0	0.05	-236.83	0.0	-924.09	402.62	-66.68	-19.83	0.0	0.0
		0.0	-8001.25	-0.27	0.0	60.0	-924.09	284.20	-66.68	-19.83	-4000.62	
2.060e+04												
						120.0	-924.09	165.79	-66.68	-19.83	-8001.25	
3.410e+04												
20	183	92.96	8320.77	1.09e-03	-236.83	0.0	950.31	19.80	69.34	-52.95	0.0	0.0
		-1.183e+04	0.0	0.27	0.0	60.0	950.31	-98.62	69.34	-52.95	4160.39	-
2364.75												
						120.0	950.31	-217.04	69.34	-52.95	8320.77	-
1.183e+04												
20	189	1.159e+04	1.092e+04	0.02	-236.83	0.0	-160.97	213.96	90.97	-58.00	0.0	0.0
		0.0	0.0	-0.20	0.0	60.0	-160.97	95.54	90.97	-58.00	5458.43	
9285.16												
						120.0	-160.97	-22.87	90.97	-58.00	1.092e+04	
1.147e+04												
20	192	1.101e+04	0.0	0.03	-236.83	0.0	187.19	208.45	-88.31	-14.79	0.0	0.0
		0.0	-1.060e+04	0.20	0.0	60.0	187.19	90.04	-88.31	-14.79	-5298.67	
8954.61												
						120.0	187.19	-28.38	-88.31	-14.79	-1.060e+04	
1.080e+04												
20	205	7226.11	7069.59	0.02	-236.83	0.0	259.60	169.00	58.91	-55.69	0.0	0.0
		0.0	0.0	-0.18	0.0	60.0	259.60	50.58	58.91	-55.69	3534.80	
6587.53												
						120.0	259.60	-67.83	58.91	-55.69	7069.59	
6070.13												
20	206	1.906e+04	0.0	0.04	-236.83	0.0	-407.68	277.27	-28.90	-27.07	0.0	0.0
		0.0	-3467.59	0.06	0.0	60.0	-407.68	158.86	-28.90	-27.07	-1733.80	
1.308e+04												
						120.0	-407.68	40.44	-28.90	-27.07	-3467.59	
1.906e+04												
20	207	5334.75	3787.12	0.02	-236.83	0.0	433.90	145.14	31.56	-45.72	0.0	0.0
		0.0	0.0	-0.06	0.0	60.0	433.90	26.72	31.56	-45.72	1893.56	
5155.91												
						120.0	433.90	-91.69	31.56	-45.72	3787.12	
3206.90												
20	214	2.142e+04	0.0	0.04	-236.83	0.0	-403.65	296.91	-30.75	-28.55	0.0	0.0
		0.0	-3689.99	-0.12	0.0	60.0	-403.65	178.50	-30.75	-28.55	-1844.99	
1.426e+04												
						120.0	-403.65	60.08	-30.75	-28.55	-3689.99	
2.142e+04												
20	221	1.153e+04	8837.28	0.02	-236.83	0.0	-127.14	213.40	73.64	-53.82	0.0	0.0
		0.0	0.0	-0.16	0.0	60.0	-127.14	94.98	73.64	-53.82	4418.64	
9251.50												
						120.0	-127.14	-23.43	73.64	-53.82	8837.28	
1.140e+04												
20	224	1.107e+04	0.0	0.03	-236.83	0.0	153.37	209.01	-70.98	-18.97	0.0	0.0
		0.0	-8517.75	0.16	0.0	60.0	153.37	90.60	-70.98	-18.97	-4258.88	
8988.26												
						120.0	153.37	-27.82	-70.98	-18.97	-8517.75	
1.087e+04												

Viale Duca Alessandro n. 11 – 43123 Parma
Cell. 335 1403156 – E mail ing.concari@gmail.com
Sito web: studioaire.it – P.IVA 02561480340

20	237	7940.50	5756.35	0.02	-236.83	0.0	212.15	177.04	47.97	-52.01	0.0	0.0
		0.0	0.0	-0.14	0.0	60.0	212.15	58.62	47.97	-52.01	2878.18	
7069.90												
						120.0	212.15	-59.79	47.97	-52.01	5756.35	
7034.87												
20	238	1.754e+04	0.0	0.03	-236.83	0.0	-326.41	264.60	-23.25	-28.81	0.0	0.0
		0.0	-2789.90	0.05	0.0	60.0	-326.41	146.18	-23.25	-28.81	-1394.95	
1.232e+04												
						120.0	-326.41	27.77	-23.25	-28.81	-2789.90	
1.754e+04												
20	239	6303.11	3109.42	0.02	-236.83	0.0	352.64	157.81	25.91	-43.97	0.0	0.0
		0.0	0.0	-0.05	0.0	60.0	352.64	39.40	25.91	-43.97	1554.71	
5916.25												
						120.0	352.64	-79.02	25.91	-43.97	3109.42	
4727.58												
20	246	1.944e+04	0.0	0.03	-236.83	0.0	-323.04	280.38	-24.75	-30.03	0.0	0.0
		0.0	-2970.53	-0.09	0.0	60.0	-323.04	161.96	-24.75	-30.03	-1485.27	
1.327e+04												
						120.0	-323.04	43.54	-24.75	-30.03	-2970.53	
1.944e+04												
20	261	1.499e+04	138.54	0.02	-265.63	0.0	41.93	257.71	1.15	-40.48	0.0	0.0
		0.0	0.0	-0.02	0.0	60.0	41.93	124.89	1.15	-40.48	69.27	
1.148e+04												
						120.0	41.93	-7.92	1.15	-40.48	138.54	
1.499e+04												
20	273	1.844e+04	1658.36	0.03	-352.03	0.0	9.70	328.95	13.82	-56.32	0.0	0.0
		0.0	0.0	-0.02	0.0	60.0	9.70	152.94	13.82	-56.32	829.18	
1.446e+04												
						120.0	9.70	-23.08	13.82	-56.32	1658.36	
1.835e+04												
20	287	1994.11	2509.08	0.02	-64.03	0.0	-53.18	46.17	20.91	-21.21	0.0	0.0
		0.0	0.0	0.01	0.0	60.0	-53.18	14.15	20.91	-21.21	1254.54	
1809.64												
						120.0	-53.18	-17.86	20.91	-21.21	2509.08	
1698.35												
20	291	1.170e+04	2624.39	0.03	-265.63	0.0	-44.01	227.63	21.87	-47.69	0.0	0.0
		0.0	0.0	0.01	0.0	60.0	-44.01	94.81	21.87	-47.69	1312.20	
9673.29												
						120.0	-44.01	-38.00	21.87	-47.69	2624.39	
1.138e+04												
20	319	375.09	770.63	0.02	-64.03	0.0	83.61	20.01	6.42	-19.92	0.0	0.0
		-1440.98	0.0	0.02	0.0	60.0	83.61	-12.01	6.42	-19.92	385.32	
239.97												
						120.0	83.61	-44.02	6.42	-19.92	770.63	-
1440.98												
20	321	1.154e+04	840.71	0.02	-265.63	0.0	125.79	226.16	7.01	-46.77	0.0	0.0
		0.0	0.0	-5.82e-03	0.0	60.0	125.79	93.35	7.01	-46.77	420.35	
9585.21												
						120.0	125.79	-39.47	7.01	-46.77	840.71	
1.120e+04												
20	325	2903.70	60.92	0.02	-64.03	0.0	5.25	55.67	0.51	-13.69	0.0	0.0
		0.0	0.0	1.16e-04	0.0	60.0	5.25	23.65	0.51	-13.69	30.46	
2379.60												
						120.0	5.25	-8.36	0.51	-13.69	60.92	
2838.28												
20	327	1.130e+04	159.76	0.03	-236.83	0.0	13.11	211.21	1.33	-36.39	0.0	0.0
		0.0	0.0	4.52e-04	0.0	60.0	13.11	92.79	1.33	-36.39	79.88	
9119.88												
						120.0	13.11	-25.63	1.33	-36.39	159.76	
1.113e+04												
20	331	1.270e+04	176.24	0.03	-265.63	0.0	14.42	237.13	1.47	-40.17	0.0	0.0
		0.0	0.0	5.08e-04	0.0	60.0	14.42	104.31	1.47	-40.17	88.12	
1.024e+04												
						120.0	14.42	-28.50	1.47	-40.17	176.24	
1.252e+04												
20	335	1927.89	79.77	0.02	-64.03	0.0	-8.50	45.38	0.66	-13.54	0.0	0.0
		0.0	0.0	0.01	0.0	60.0	-8.50	13.36	0.66	-13.54	39.89	
1762.28												
						120.0	-8.50	-18.65	0.66	-13.54	79.77	
1603.63												
20	337	1.243e+04	140.91	0.02	-236.83	0.0	26.86	221.49	1.17	-36.54	0.0	0.0
		0.0	0.0	-0.01	0.0	60.0	26.86	103.08	1.17	-36.54	70.46	
9737.21												
						120.0	26.86	-15.34	1.17	-36.54	140.91	
1.237e+04												
20	339	1.022e+04	178.61	0.03	-236.83	0.0	-0.64	200.92	1.49	-36.24	0.0	0.0
		0.0	0.0	0.01	0.0	60.0	-0.64	82.50	1.49	-36.24	89.31	
8502.55												
						120.0	-0.64	-35.91	1.49	-36.24	178.61	
9900.18												
20	347	1.136e+04	644.87	0.03	-236.83	0.0	4.73	211.78	5.37	-37.93	0.0	0.0
		0.0	0.0	-1.78e-03	0.0	60.0	4.73	93.36	5.37	-37.93	322.43	
9154.05												
						120.0	4.73	-25.06	5.37	-37.93	644.87	
1.120e+04												
20	351	1.081e+04	297.18	0.02	-236.83	0.0	32.09	206.54	2.48	-37.67	0.0	0.0
		0.0	0.0	2.25e-03	0.0	60.0	32.09	88.13	2.48	-37.67	148.59	
8840.11												
						120.0	32.09	-30.29	2.48	-37.67	297.18	
1.058e+04												
21	7	-2.142e+04	88.69	-3.80e-03	-3.41	0.0	-236.54	2689.77	8.32	-297.49	5.51	-
4.830e+04												

Viale Duca Alessandro n. 11 – 43123 Parma
Cell. 335 1403156 – E mail ing.concari@gmail.com
Sito web: studioaire.it – P.IVA 02561480340

		-4.830e+04	5.51	1.12e-03	0.0	5.0	-236.54	2688.07	8.32	-297.49	47.10	-
3.486e+04												
						10.0	-236.54	2686.36	8.32	-297.49	88.69	-
2.142e+04												
21	79	1.218e+04	227.02	-5.22e-03	-3.41	0.0	5.80	1783.22	20.19	-15.57	25.16	-
5636.06												
		-5636.06	25.16	5.09e-03	0.0	5.0	4.33	1781.52	20.19	-15.57	126.09	
3275.81												
						10.0	2.86	1779.82	20.19	-15.57	227.02	
1.218e+04												
21	81	3.234e+04	171.80	-4.67e-03	-2.62	0.0	211.40	217.22	16.27	223.52	9.09	
3.018e+04												
		3.018e+04	9.09	1.84e-03	0.0	5.0	209.93	215.91	16.27	223.52	90.44	
3.127e+04												
						10.0	208.46	214.60	16.27	223.52	171.80	
3.234e+04												
21	145	1.506e+04	-0.43	-4.18e-04	-2.62	0.0	86.07	157.31	-4.44	225.49	-0.43	
1.350e+04												
		1.350e+04	-59.49	-8.89e-05	-2.94	5.0	86.07	156.00	-5.91	225.49	-26.29	
1.429e+04												
						10.0	86.07	154.69	-7.37	225.49	-59.49	
1.506e+04												
21	153	1.359e+05	1459.62	-0.01	-2.62	0.0	945.71	-112.81	125.34	1930.96	118.66	
1.359e+05												
		1.355e+05	118.66	0.04	0.0	5.0	945.71	-114.12	125.34	1930.96	789.14	
1.357e+05												
						10.0	945.71	-115.43	125.34	1930.96	1459.62	
1.355e+05												
21	156	-1.512e+05	-122.13	6.91e-03	-2.62	0.0	-1130.64	2748.81	-116.53	-2151.29	-122.13	-
1.780e+05												
		-1.780e+05	-1375.00	-0.04	0.0	5.0	-1130.64	2747.50	-116.53	-2151.29	-748.56	-
1.646e+05												
						10.0	-1130.64	2746.19	-116.53	-2151.29	-1375.00	-
1.512e+05												
21	161	1.308e+05	1829.86	-0.01	-2.62	0.0	895.78	-53.42	158.20	2445.96	159.40	
1.302e+05												
		1.302e+05	159.40	0.05	0.0	5.0	895.78	-54.73	158.20	2445.96	994.63	
1.305e+05												
						10.0	895.78	-56.04	158.20	2445.96	1829.86	
1.308e+05												
21	164	-1.465e+05	-162.87	6.82e-03	-2.62	0.0	-1080.71	2689.42	-149.39	-2666.29	-162.87	-
1.723e+05												
		-1.723e+05	-1745.24	-0.05	0.0	5.0	-1080.71	2688.11	-149.39	-2666.29	-954.05	-
1.594e+05												
						10.0	-1080.71	2686.80	-149.39	-2666.29	-1745.24	-
1.465e+05												
21	185	5.555e+04	667.95	-6.55e-03	-2.62	0.0	366.07	679.00	57.82	794.17	50.84	
4.845e+04												
		4.845e+04	50.84	0.02	0.0	5.0	366.07	677.69	57.82	794.17	359.39	
5.200e+04												
						10.0	366.07	676.38	57.82	794.17	667.95	
5.555e+04												
21	188	-7.125e+04	-54.31	1.67e-03	-2.62	0.0	-551.00	1957.00	-49.01	-1014.50	-54.31	-
9.048e+04												
		-9.048e+04	-583.33	-0.02	0.0	5.0	-551.00	1955.69	-49.01	-1014.50	-318.82	-
8.086e+04												
						10.0	-551.00	1954.38	-49.01	-1014.50	-583.33	-
7.125e+04												
21	189	5.556e+04	596.17	-6.47e-03	-2.62	0.0	364.38	658.14	51.53	737.22	82.62	
4.873e+04												
		4.873e+04	82.62	0.02	0.0	5.0	364.38	656.83	51.53	737.22	339.39	
5.215e+04												
						10.0	364.38	655.52	51.53	737.22	596.17	
5.556e+04												
21	192	-7.126e+04	-86.09	1.59e-03	-2.62	0.0	-549.31	1977.86	-42.72	-957.55	-86.09	-
9.076e+04												
		-9.076e+04	-511.55	-0.02	0.0	5.0	-549.31	1976.55	-42.72	-957.55	-298.82	-
8.101e+04												
						10.0	-549.31	1975.24	-42.72	-957.55	-511.55	-
7.126e+04												
21	193	5.350e+04	830.37	-6.51e-03	-2.62	0.0	344.29	704.92	72.23	1019.99	68.72	
4.598e+04												
		4.598e+04	68.72	0.02	0.0	5.0	344.29	703.61	72.23	1019.99	449.55	
4.974e+04												
						10.0	344.29	702.30	72.23	1019.99	830.37	
5.350e+04												
21	196	-6.920e+04	-72.19	1.63e-03	-2.62	0.0	-529.22	1931.08	-63.42	-1240.33	-72.19	-
8.801e+04												
		-8.801e+04	-745.75	-0.02	0.0	5.0	-529.22	1929.77	-63.42	-1240.33	-408.97	-
7.860e+04												
						10.0	-529.22	1928.46	-63.42	-1240.33	-745.75	-
6.920e+04												
21	217	4.331e+04	546.98	-5.75e-03	-2.62	0.0	277.46	801.22	47.50	619.92	40.57	
3.505e+04												
		3.505e+04	40.57	0.01	0.0	5.0	277.46	799.91	47.50	619.92	293.77	
3.918e+04												
						10.0	277.46	798.60	47.50	619.92	546.98	
4.331e+04												
21	220	-5.901e+04	-44.04	8.72e-04	-2.62	0.0	-462.38	1834.78	-38.69	-840.25	-44.04	-
7.708e+04												
		-7.708e+04	-462.36	-0.02	0.0	5.0	-462.38	1833.47	-38.69	-840.25	-253.20	-
6.804e+04												

Viale Duca Alessandro n. 11 – 43123 Parma
Cell. 335 1403156 – E mail ing.concari@gmail.com
Sito web: studioaire.it – P.IVA 02561480340

						10.0	-462.38	1832.16	-38.69	-840.25	-462.36	-5.901e+04
21	224	-5.900e+04	-69.72	8.12e-04	-2.62	0.0	-460.95	1850.77	-33.59	-793.72	-69.72	-7.729e+04
		-7.729e+04	-404.19	-0.01	0.0	5.0	-460.95	1849.46	-33.59	-793.72	-236.96	-6.814e+04
						10.0	-460.95	1848.15	-33.59	-793.72	-404.19	-5.900e+04
21	225	4.166e+04	677.80	-5.72e-03	-2.62	0.0	259.93	822.08	59.11	801.80	54.97	3.306e+04
		3.306e+04	54.97	0.02	0.0	5.0	259.93	820.76	59.11	801.80	366.39	3.737e+04
						10.0	259.93	819.45	59.11	801.80	677.80	4.166e+04
21	228	-5.736e+04	-58.44	8.40e-04	-2.62	0.0	-444.86	1813.93	-50.30	-1022.13	-58.44	-7.510e+04
		-7.510e+04	-593.18	-0.02	0.0	5.0	-444.86	1812.62	-50.30	-1022.13	-325.81	-6.623e+04
						10.0	-444.86	1811.30	-50.30	-1022.13	-593.18	-5.736e+04
21	255	-1.468e+04	61.28	-2.66e-03	-2.62	0.0	-162.33	1859.14	5.77	-198.63	3.59	-3.326e+04
		-3.326e+04	3.59	7.27e-04	0.0	5.0	-162.33	1857.83	5.77	-198.63	32.44	-2.397e+04
						10.0	-162.33	1856.52	5.77	-198.63	61.28	-1.468e+04
21	285	2.057e+04	119.92	-3.42e-03	-2.62	0.0	129.34	309.72	11.41	148.26	5.85	1.749e+04
		1.749e+04	5.85	1.19e-03	0.0	5.0	128.37	308.40	11.41	148.26	62.88	1.903e+04
						10.0	127.39	307.09	11.41	148.26	119.92	2.057e+04
21	291	7722.48	153.50	-3.60e-03	-2.62	0.0	-0.77	1254.78	13.68	-10.68	16.69	-4812.18
		-4812.18	16.69	3.37e-03	0.0	5.0	-1.75	1253.47	13.68	-10.68	85.10	1458.43
						10.0	-2.73	1252.16	13.68	-10.68	153.50	7722.48
21	317	9049.97	-0.50	-5.85e-04	-2.62	0.0	45.80	269.77	-2.40	149.57	-0.50	6365.34
		6365.34	-34.27	-1.01e-04	-1.96	5.0	45.80	268.46	-3.38	149.57	-14.94	7710.93
						10.0	45.80	267.15	-4.36	149.57	-34.27	9049.97
21	325	-2977.12	16.16	-9.21e-04	-2.62	0.0	-34.76	494.70	1.68	-2.27	-0.63	-7911.04
		-7911.04	-0.63	-1.26e-04	0.0	5.0	-34.76	493.39	1.68	-2.27	7.77	-5440.81
						10.0	-34.76	492.08	1.68	-2.27	16.16	-2977.12
21	327	-7850.13	42.31	-2.44e-03	-2.62	0.0	-92.46	1318.00	4.40	-110.17	-1.74	-2.102e+04
		-2.102e+04	-1.74	-3.48e-04	0.0	5.0	-92.46	1316.69	4.40	-110.17	20.29	-1.443e+04
						10.0	-92.46	1315.38	4.40	-110.17	42.31	-7850.13
21	337	-4865.98	41.03	-3.10e-03	-2.62	0.0	-66.30	1324.44	4.78	-96.39	-6.79	-1.810e+04
		-1.810e+04	-6.79	-1.37e-03	0.0	5.0	-66.30	1323.13	4.78	-96.39	17.12	-1.148e+04
						10.0	-66.30	1321.82	4.78	-96.39	41.03	-4865.98
21	339	-1.083e+04	43.59	-1.78e-03	-2.62	0.0	-118.63	1311.56	4.03	-123.94	3.32	-2.394e+04
		-2.394e+04	3.32	6.72e-04	0.0	5.0	-118.63	1310.25	4.03	-123.94	23.46	-1.738e+04
						10.0	-118.63	1308.94	4.03	-123.94	43.59	-1.083e+04
21	345	1016.03	37.22	-1.26e-03	-2.62	0.0	-8.22	456.16	3.53	24.53	1.88	-3532.46
		-3532.46	1.88	3.81e-04	0.0	5.0	-8.41	454.85	3.53	24.53	19.55	-1254.94
						10.0	-8.61	453.54	3.53	24.53	37.22	1016.03
21	347	-3856.98	63.37	-2.78e-03	-2.62	0.0	-65.92	1279.46	6.26	-83.37	0.77	-1.664e+04
		-1.664e+04	0.77	1.59e-04	0.0	5.0	-66.12	1278.15	6.26	-83.37	32.07	-1.024e+04
						10.0	-66.31	1276.84	6.26	-83.37	63.37	-3856.98
22	7	6.418e+04	892.18	0.03	546.44	0.0	-4.70	260.93	7.43	0.0	0.0	80.04
		80.04	0.0	-0.02	0.0	60.0	-4.70	534.15	7.43	0.0	446.09	2.393e+04
						120.0	-4.70	807.37	7.43	0.0	892.18	6.418e+04
22	27	1.194e+04	222.71	-1.55e-03	88.03	0.0	0.35	55.36	1.86	0.0	0.0	14.15
		14.15	0.0	-0.04	0.0	60.0	0.35	99.37	1.86	0.0	111.36	4656.16
						120.0	0.35	143.39	1.86	0.0	222.71	1.194e+04

Viale Duca Alessandro n. 11 – 43123 Parma
Cell. 335 1403156 – E mail ing.concari@gmail.com
Sito web: studioaire.it – P.IVA 02561480340

22	45	6.617e+04	0.0	0.02	546.44	0.0	3.68	277.52	-8.34	0.0	0.0
81.01											
		81.01	-2270.02	0.03	-21.15	60.0	3.68	550.74	-18.92	0.0	-817.81
2.493e+04											
						120.0	3.68	823.96	-29.49	0.0	-2270.02
6.617e+04											
22	81	1.469e+04	0.0	-0.01	88.03	0.0	14.82	78.25	-24.18	0.0	0.0
15.51											
		15.51	-5015.72	0.03	-35.24	60.0	14.82	122.26	-41.80	0.0	-1979.20
6030.82											
						120.0	14.82	166.28	-59.42	0.0	-5015.72
1.469e+04											
22	83	1.297e+04	0.0	-4.20e-03	88.03	0.0	16.36	63.98	-23.38	0.0	0.0
14.75											
		14.75	-4920.02	-0.02	-35.24	60.0	16.36	107.99	-41.00	0.0	-1931.35
5173.73											
						120.0	16.36	152.01	-58.62	0.0	-4920.02
1.297e+04											
22	141	4.521e+04	0.0	0.04	416.84	0.0	-9.44	167.76	-1.45	0.0	0.0
69.53											
		69.53	-173.67	8.22e-03	0.0	60.0	-27.06	376.18	-1.45	0.0	-86.84
1.639e+04											
						120.0	-44.69	584.60	-1.45	0.0	-173.67
4.521e+04											
22	154	4.484e+04	0.0	-0.03	260.83	0.0	101.63	242.90	-186.86	0.0	0.0
42.90											
		42.90	-2.242e+04	0.42	0.0	60.0	101.63	373.32	-186.86	0.0	-1.121e+04
1.853e+04											
						120.0	101.63	503.73	-186.86	0.0	-2.242e+04
4.484e+04											
22	155	2.002e+04	2.324e+04	0.04	260.83	0.0	-106.90	36.11	193.63	0.0	0.0
35.63											
		35.63	0.0	-0.42	0.0	60.0	-106.90	166.53	193.63	0.0	1.162e+04
6116.31											
						120.0	-106.90	296.94	193.63	0.0	2.324e+04
2.002e+04											
22	162	4.825e+04	0.0	-0.03	260.83	0.0	138.52	271.30	-144.62	0.0	0.0
45.58											
		45.58	-1.735e+04	0.35	0.0	60.0	138.52	401.72	-144.62	0.0	-8676.96
2.023e+04											
						120.0	138.52	532.13	-144.62	0.0	-1.735e+04
4.825e+04											
22	163	1.661e+04	1.817e+04	0.05	260.83	0.0	-143.79	7.72	151.39	0.0	0.0
32.95											
		32.95	0.0	-0.35	0.0	60.0	-143.79	138.13	151.39	0.0	9083.31
4409.83											
						120.0	-143.79	268.55	151.39	0.0	1.817e+04
1.661e+04											
22	182	6.055e+04	8095.84	-0.07	260.83	0.0	117.10	373.77	67.47	0.0	0.0
27.86											
		27.86	0.0	0.27	0.0	60.0	117.10	504.19	67.47	0.0	4047.92
2.637e+04											
						120.0	117.10	634.60	67.47	0.0	8095.84
6.055e+04											
22	183	4315.17	0.0	0.08	260.83	0.0	-122.37	-94.75	-60.69	0.0	0.0
50.67											
		-2018.08	-7283.13	-0.27	0.0	60.0	-122.37	35.66	-60.69	0.0	-3641.56 -
1729.54											
						120.0	-122.37	166.08	-60.69	0.0	-7283.13
4315.17											
22	186	3.803e+04	0.0	-0.01	260.83	0.0	43.25	186.14	-80.75	0.0	0.0
40.88											
		40.88	-9690.25	0.19	0.0	60.0	43.25	316.56	-80.75	0.0	-4845.12
1.512e+04											
						120.0	43.25	446.97	-80.75	0.0	-9690.25
3.803e+04											
22	187	2.683e+04	1.050e+04	0.02	260.83	0.0	-48.51	92.88	87.52	0.0	0.0
37.65											
		37.65	0.0	-0.19	0.0	60.0	-48.51	223.29	87.52	0.0	5251.48
9523.34											
						120.0	-48.51	353.71	87.52	0.0	1.050e+04
2.683e+04											
22	198	4.017e+04	0.0	-0.01	260.83	0.0	59.50	203.95	-33.43	0.0	0.0
41.78											
		41.78	-4011.93	0.21	0.0	60.0	59.50	334.37	-33.43	0.0	-2005.97
1.619e+04											
						120.0	59.50	464.79	-33.43	0.0	-4011.93
4.017e+04											
22	199	2.469e+04	4824.64	0.03	260.83	0.0	-64.77	75.06	40.21	0.0	0.0
36.75											
		36.75	0.0	-0.21	0.0	60.0	-64.77	205.48	40.21	0.0	2412.32
8453.35											
						120.0	-64.77	335.89	40.21	0.0	4824.64
2.469e+04											
22	214	4.522e+04	4037.38	-0.03	260.83	0.0	50.85	246.08	33.64	0.0	0.0
34.22											
		34.22	0.0	0.12	0.0	60.0	50.85	376.50	33.64	0.0	2018.69
1.871e+04											
						120.0	50.85	506.91	33.64	0.0	4037.38
4.522e+04											
22	216	4.265e+04	7668.76	-0.02	260.83	0.0	20.46	224.67	63.91	0.0	0.0
31.56											

Viale Duca Alessandro n. 11 – 43123 Parma
Cell. 335 1403156 – E mail ing.concari@gmail.com
Sito web: studioaire.it – P.IVA 02561480340

		31.56	0.0	-0.02	0.0	60.0	20.46	355.09	63.91	0.0	3834.38
1.743e+04											
						120.0	20.46	485.50	63.91	0.0	7668.76
4.265e+04											
22	218	3.697e+04	0.0	-9.03e-03	260.83	0.0	34.35	177.31	-64.51	0.0	0.0
40.57											
		40.57	-7741.66	0.15	0.0	60.0	34.35	307.72	-64.51	0.0	-3870.83
1.459e+04											
						120.0	34.35	438.14	-64.51	0.0	-7741.66
3.697e+04											
22	219	2.789e+04	8554.37	0.02	260.83	0.0	-39.62	101.71	71.29	0.0	0.0
37.96											
		37.96	0.0	-0.15	0.0	60.0	-39.62	232.12	71.29	0.0	4277.19
1.005e+04											
						120.0	-39.62	362.54	71.29	0.0	8554.37
2.789e+04											
22	230	3.868e+04	0.0	-0.01	260.83	0.0	47.46	191.54	-26.24	0.0	0.0
41.29											
		41.29	-3148.63	0.17	0.0	60.0	47.46	321.96	-26.24	0.0	-1574.31
1.545e+04											
						120.0	47.46	452.37	-26.24	0.0	-3148.63
3.868e+04											
22	231	2.618e+04	3961.34	0.02	260.83	0.0	-52.73	87.48	33.01	0.0	0.0
37.24											
		37.24	0.0	-0.17	0.0	60.0	-52.73	217.89	33.01	0.0	1980.67
9198.65											
						120.0	-52.73	348.31	33.01	0.0	3961.34
2.618e+04											
22	246	4.277e+04	3358.82	-0.02	260.83	0.0	40.52	225.68	27.99	0.0	0.0
35.19											
		35.19	0.0	0.09	0.0	60.0	40.52	356.09	27.99	0.0	1679.41
1.749e+04											
						120.0	40.52	486.51	27.99	0.0	3358.82
4.277e+04											
22	248	4.070e+04	6286.77	-0.02	260.83	0.0	16.03	208.42	52.39	0.0	0.0
33.05											
		33.05	0.0	-0.01	0.0	60.0	16.03	338.83	52.39	0.0	3143.39
1.645e+04											
						120.0	16.03	469.25	52.39	0.0	6286.77
4.070e+04											
22	255	4.457e+04	613.85	0.02	376.03	0.0	-3.25	182.92	5.12	0.0	0.0
55.33											
		55.33	0.0	-0.02	0.0	60.0	-3.25	370.94	5.12	0.0	306.92
1.667e+04											
						120.0	-3.25	558.95	5.12	0.0	613.85
4.457e+04											
22	259	1.242e+04	196.13	-2.87e-03	88.03	0.0	-0.08	59.32	1.63	0.0	0.0
14.36											
		14.36	0.0	-0.03	0.0	60.0	-0.08	103.34	1.63	0.0	98.06
4894.24											
						120.0	-0.08	147.35	1.63	0.0	196.13
1.242e+04											
22	273	4.590e+04	0.0	0.01	376.03	0.0	2.33	193.98	-5.40	0.0	0.0
55.98											
		55.98	-1494.28	0.02	-14.10	60.0	2.33	382.00	-12.45	0.0	-535.68
1.734e+04											
						120.0	2.33	570.01	-19.50	0.0	-1494.28
4.590e+04											
22	285	1.425e+04	0.0	-8.88e-03	88.03	0.0	9.57	74.58	-15.72	0.0	0.0
15.27											
		15.27	-3296.16	0.02	-23.50	60.0	9.57	118.60	-27.47	0.0	-1295.64
5810.68											
						120.0	9.57	162.61	-39.22	0.0	-3296.16
1.425e+04											
22	287	1.310e+04	0.0	-4.78e-03	88.03	0.0	10.60	65.07	-15.19	0.0	0.0
14.76											
		14.76	-3232.36	-0.01	-23.50	60.0	10.60	109.08	-26.94	0.0	-1263.74
5239.29											
						120.0	10.60	153.10	-38.68	0.0	-3232.36
1.310e+04											
22	321	3.192e+04	0.0	0.03	289.63	0.0	-6.42	120.81	-0.81	0.0	0.0
48.32											
		48.32	-96.72	5.46e-03	0.0	60.0	-18.17	265.62	-0.81	0.0	-48.36
1.164e+04											
						120.0	-29.92	410.44	-0.81	0.0	-96.72
3.192e+04											
22	325	1.337e+04	142.96	-5.96e-03	88.03	0.0	-0.93	67.25	1.19	0.0	0.0
14.78											
		14.78	0.0	-4.24e-04	0.0	60.0	-0.93	111.27	1.19	0.0	71.48
5370.41											
						120.0	-0.93	155.28	1.19	0.0	142.96
1.337e+04											
22	327	3.243e+04	406.35	6.38e-03	260.83	0.0	-2.63	139.51	3.39	0.0	0.0
39.26											
		39.26	0.0	-1.27e-03	0.0	60.0	-2.63	269.92	3.39	0.0	203.18
1.232e+04											
						120.0	-2.63	400.34	3.39	0.0	406.35
3.243e+04											
22	331	3.561e+04	450.25	8.39e-03	289.63	0.0	-2.92	151.55	3.75	0.0	0.0
43.35											
		43.35	0.0	-1.42e-03	0.0	60.0	-2.92	296.37	3.75	0.0	225.13
1.348e+04											

Viale Duca Alessandro n. 11 – 43123 Parma
Cell. 335 1403156 – E mail ing.concari@gmail.com
Sito web: studioaire.it – P.IVA 02561480340

						120.0	-2.92	441.18	3.75	0.0	450.25	
3.561e+04												
22	335	1.289e+04	169.55	-4.34e-03	88.03	0.0	-0.51	63.29	1.41	0.0	0.0	
14.57												
		14.57	0.0	-0.01	0.0	60.0	-0.51	107.30	1.41	0.0	84.77	
5132.32												
						120.0	-0.51	151.32	1.41	0.0	169.55	
1.289e+04												
22	345	1.343e+04	0.0	-6.12e-03	88.03	0.0	1.27	67.77	-2.14	0.0	0.0	
14.83												
		14.83	-538.48	1.51e-03	-4.70	60.0	1.27	111.78	-4.49	0.0	-198.75	
5401.32												
						120.0	1.27	155.80	-6.84	0.0	-538.48	
1.343e+04												
22	351	3.158e+04	303.34	0.01	260.83	0.0	-3.23	132.41	2.53	0.0	0.0	
40.21												
		40.21	0.0	-2.45e-03	0.0	60.0	-5.58	262.82	2.53	0.0	151.67	
1.190e+04												
						120.0	-7.93	393.24	2.53	0.0	303.34	
3.158e+04												
23	5	2.840e+04	748.07	-0.12	-77.00	0.0	-6.64	275.21	6.23	80.80	0.0	0.0
		0.0	0.0	-0.03	0.0	60.0	-6.64	236.71	6.23	80.80	374.04	
1.536e+04												
						120.0	-6.64	198.21	6.23	80.80	748.07	
2.840e+04												
23	45	2.868e+04	0.0	-0.12	-77.00	0.0	8.34	277.52	-3.68	81.01	0.0	0.0
		0.0	-441.57	5.20e-03	0.0	60.0	-2.23	239.02	-3.68	81.01	-220.79	
1.550e+04												
						120.0	-12.80	200.52	-3.68	81.01	-441.57	
2.868e+04												
23	79	2.065e+04	0.0	-0.09	-77.00	0.0	19.18	210.60	-13.10	62.03	0.0	0.0
		0.0	-1572.38	0.08	0.0	60.0	1.56	172.10	-13.10	62.03	-786.19	
1.148e+04												
						120.0	-16.06	133.60	-13.10	62.03	-1572.38	
2.065e+04												
23	81	5835.86	0.0	-0.02	-59.23	0.0	24.18	78.25	-14.82	15.51	0.0	0.0
		0.0	-1778.53	0.03	0.0	60.0	6.55	48.63	-14.82	15.51	-889.27	
3806.39												
						120.0	-11.07	19.02	-14.82	15.51	-1778.53	
5835.86												
23	83	4123.19	0.0	-0.02	-59.23	0.0	23.38	63.98	-16.36	14.75	0.0	0.0
		0.0	-1963.16	0.08	0.0	60.0	5.76	34.36	-16.36	14.75	-981.58	
2950.06												
						120.0	-11.87	4.74	-16.36	14.75	-1963.16	
4123.19												
23	147	47.40	36.68	-0.02	-59.23	0.0	4.85	6.86	4.65	21.49	0.0	0.0
		-2730.41	-1556.90	0.06	-35.24	60.0	4.85	-22.75	-12.97	21.49	-249.79	-
476.74												
						120.0	4.85	-52.37	-30.60	21.49	-1556.90	-
2730.41												
23	162	2.780e+04	0.0	-0.06	-59.23	0.0	121.54	261.28	-175.34	45.58	0.0	0.0
		0.0	-2.104e+04	0.56	0.0	60.0	121.54	231.66	-175.34	45.58	-1.052e+04	
1.479e+04												
						120.0	121.54	202.05	-175.34	45.58	-2.104e+04	
2.780e+04												
23	163	318.25	2.167e+04	-0.05	-59.23	0.0	-128.31	17.74	180.61	32.95	0.0	0.0
		-1424.86	0.0	-0.56	0.0	60.0	-128.31	-11.87	180.61	32.95	1.084e+04	
176.03												
						120.0	-128.31	-41.49	180.61	32.95	2.167e+04	-
1424.86												
23	182	3.900e+04	4556.54	-0.08	-59.23	0.0	-4.56	354.63	37.97	27.86	0.0	0.0
		0.0	0.0	-0.06	0.0	60.0	-4.56	325.01	37.97	27.86	2278.27	
2.039e+04												
						120.0	-4.56	295.40	37.97	27.86	4556.54	
3.900e+04												
23	183	0.0	0.0	-0.03	-59.23	0.0	-2.21	-75.61	-32.70	50.67	0.0	0.0
		-1.263e+04	-3924.51	0.06	0.0	60.0	-2.21	-105.22	-32.70	50.67	-1962.26	-
5424.95												
						120.0	-2.21	-134.84	-32.70	50.67	-3924.51	-
1.263e+04												
23	194	1.971e+04	0.0	-0.06	-59.23	0.0	51.68	193.90	-76.08	42.04	0.0	0.0
		0.0	-9129.87	0.24	0.0	60.0	51.68	164.28	-76.08	42.04	-4564.93	
1.075e+04												
						120.0	51.68	134.67	-76.08	42.04	-9129.87	
1.971e+04												
23	195	6660.47	9761.89	-0.05	-59.23	0.0	-58.46	85.12	81.35	36.49	0.0	0.0
		0.0	0.0	-0.25	0.0	60.0	-58.46	55.50	81.35	36.49	4880.95	
4218.70												
						120.0	-58.46	25.89	81.35	36.49	9761.89	
6660.47												
23	205	6056.38	5098.70	-0.05	-59.23	0.0	-25.86	80.09	42.49	46.10	0.0	0.0
		0.0	0.0	0.27	0.0	60.0	-25.86	50.47	42.49	46.10	2549.35	
3916.65												
						120.0	-25.86	20.85	42.49	46.10	5098.70	
6056.38												
23	214	2.492e+04	2444.94	-0.07	-59.23	0.0	-4.62	237.29	20.37	34.22	0.0	0.0
		0.0	0.0	-0.04	0.0	60.0	-4.62	207.67	20.37	34.22	1222.47	
1.335e+04												
						120.0	-4.62	178.06	20.37	34.22	2444.94	
2.492e+04												
23	226	1.847e+04	0.0	-0.06	-59.23	0.0	41.02	183.50	-60.89	41.50	0.0	0.0
		0.0	-7306.78	0.20	0.0	60.0	41.02	153.88	-60.89	41.50	-3653.39	

Viale Duca Alessandro n. 11 – 43123 Parma
Cell. 335 1403156 – E mail ing.concari@gmail.com
Sito web: studioaire.it – P.IVA 02561480340

1.012e+04												
						120.0	41.02	124.27	-60.89	41.50	-7306.78	
1.847e+04												
23	227	7908.47	7938.80	-0.05	-59.23	0.0	-47.79	95.52	66.16	37.03	0.0	0.0
		0.0	0.0	-0.20	0.0	60.0	-47.79	65.90	66.16	37.03	3969.40	
4842.70												
						120.0	-47.79	36.29	66.16	37.03	7938.80	
7908.47												
23	237	7377.29	4211.59	-0.05	-59.23	0.0	-21.62	91.09	35.10	44.78	0.0	0.0
		0.0	0.0	0.21	0.0	60.0	-21.62	61.48	35.10	44.78	2105.80	
4577.11												
						120.0	-21.62	31.86	35.10	44.78	4211.59	
7377.29												
23	246	2.267e+04	2055.10	-0.06	-59.23	0.0	-4.44	218.54	17.13	35.19	0.0	0.0
		0.0	0.0	-0.03	0.0	60.0	-4.44	188.93	17.13	35.19	1027.55	
1.222e+04												
						120.0	-4.44	159.31	17.13	35.19	2055.10	
2.267e+04												
23	253	1.954e+04	513.63	-0.08	-59.23	0.0	-4.58	192.44	4.28	55.84	0.0	0.0
		0.0	0.0	-0.02	0.0	60.0	-4.58	162.82	4.28	55.84	256.82	
1.066e+04												
						120.0	-4.58	133.21	4.28	55.84	513.63	
1.954e+04												
23	273	1.972e+04	0.0	-0.08	-59.23	0.0	5.40	193.98	-2.33	55.98	0.0	0.0
		0.0	-279.46	3.37e-03	0.0	60.0	-1.65	164.37	-2.33	55.98	-139.73	
1.075e+04												
						120.0	-8.69	134.75	-2.33	55.98	-279.46	
1.972e+04												
23	285	5396.06	0.0	-0.02	-59.23	0.0	15.72	74.58	-9.57	15.27	0.0	0.0
		0.0	-1148.39	0.02	0.0	60.0	3.97	44.97	-9.57	15.27	-574.20	
3586.49												
						120.0	-7.78	15.35	-9.57	15.27	-1148.39	
5396.06												
23	287	4254.29	0.0	-0.02	-59.23	0.0	15.19	65.07	-10.60	14.76	0.0	0.0
		0.0	-1271.47	0.05	0.0	60.0	3.44	35.45	-10.60	14.76	-635.74	
3015.61												
						120.0	-8.31	5.84	-10.60	14.76	-1271.47	
4254.29												
23	291	1.437e+04	0.0	-0.06	-59.23	0.0	12.63	149.37	-8.61	43.32	0.0	0.0
		0.0	-1033.33	0.05	0.0	60.0	0.88	119.75	-8.61	43.32	-516.67	
8073.55												
						120.0	-10.87	90.14	-8.61	43.32	-1033.33	
1.437e+04												
23	319	736.86	29.11	-0.02	-59.23	0.0	2.84	26.99	3.41	19.26	0.0	0.0
		-314.78	-1000.63	0.04	-23.50	60.0	2.84	-2.62	-8.34	19.26	-147.88	
731.07												
						120.0	2.84	-32.24	-20.09	19.26	-1000.63	-
314.78												
23	325	4516.47	111.89	-0.02	-59.23	0.0	-1.19	67.25	0.93	14.78	0.0	0.0
		0.0	0.0	-7.75e-04	0.0	60.0	-1.19	37.64	0.93	14.78	55.95	
3146.70												
						120.0	-1.19	8.02	0.93	14.78	111.89	
4516.47												
23	327	1.319e+04	316.01	-0.06	-59.23	0.0	-3.39	139.51	2.63	39.26	0.0	0.0
		0.0	0.0	-2.12e-03	0.0	60.0	-3.39	109.89	2.63	39.26	158.01	
7482.08												
						120.0	-3.39	80.28	2.63	39.26	316.01	
1.319e+04												
23	331	1.463e+04	350.03	-0.06	-59.23	0.0	-3.75	151.55	2.92	43.35	0.0	0.0
		0.0	0.0	-2.34e-03	0.0	60.0	-3.75	121.94	2.92	43.35	175.02	
8204.64												
						120.0	-3.75	92.32	2.92	43.35	350.03	
1.463e+04												
23	333	4992.21	163.18	-0.02	-59.23	0.0	-0.97	71.22	1.36	14.99	0.0	0.0
		0.0	0.0	-0.01	0.0	60.0	-0.97	41.60	1.36	14.99	81.59	
3384.57												
						120.0	-0.97	11.99	1.36	14.99	163.18	
4992.21												
23	337	1.366e+04	367.30	-0.06	-59.23	0.0	-3.16	143.47	3.06	39.48	0.0	0.0
		0.0	0.0	-0.02	0.0	60.0	-3.16	113.86	3.06	39.48	183.65	
7719.95												
						120.0	-3.16	84.24	3.06	39.48	367.30	
1.366e+04												
23	345	4578.21	0.0	-0.02	-59.23	0.0	2.14	67.77	-1.27	14.83	0.0	0.0
		0.0	-152.47	6.90e-03	0.0	60.0	-0.21	38.15	-1.27	14.83	-76.24	
3177.57												
						120.0	-2.56	8.54	-1.27	14.83	-152.47	
4578.21												
23	347	1.325e+04	51.65	-0.06	-59.23	0.0	-0.06	140.02	0.43	39.31	0.0	0.0
		0.0	0.0	5.65e-03	0.0	60.0	-2.41	110.41	0.43	39.31	25.82	
7512.95												
						120.0	-4.76	80.79	0.43	39.31	51.65	
1.325e+04												
24	45	81.01	1063.63	0.17	-546.44	0.0	5.11	-252.34	-1.71	0.0	0.0	
81.01												
		-6.299e+04	-7.87	-0.03	21.15	60.0	5.11	-525.56	8.86	0.0	214.62	-
2.326e+04												
						120.0	5.11	-798.78	19.44	0.0	1063.63	-
6.299e+04												
24	77	62.79	1659.85	0.14	-416.84	0.0	11.07	-205.10	-3.79	0.0	0.0	
62.79												
		-4.956e+04	-23.81	-0.03	35.24	60.0	11.07	-413.52	13.83	0.0	301.26	-

Viale Duca Alessandro n. 11 – 43123 Parma
Cell. 335 1403156 – E mail ing.concari@gmail.com
Sito web: studioaire.it – P.IVA 02561480340

1.850e+04
120.0 11.07 -621.94 31.45 0.0 1659.85 -
4.956e+04
24 81 15.51 1592.18 0.05 -88.03 0.0 13.32 -72.64 -4.35 0.0 0.0
15.51
-1.398e+04 -32.27 -0.03 35.24 60.0 13.32 -116.66 13.27 0.0 267.43 -
5663.42
120.0 13.32 -160.67 30.89 0.0 1592.18 -
1.398e+04
24 101 85.05 0.0 0.16 -546.44 0.0 3.55 -217.22 -9.54 0.0 0.0
85.05
-5.877e+04 -1144.87 -0.01 0.0 60.0 -7.02 -490.44 -9.54 0.0 -572.44 -
2.114e+04
120.0 -17.60 -763.66 -9.54 0.0 -1144.87 -
5.877e+04
24 143 68.77 0.0 0.12 -416.84 0.0 6.01 -134.22 -17.22 0.0 0.0
68.77
-4.105e+04 -2066.00 0.04 0.0 60.0 -11.62 -342.64 -17.22 0.0 -1033.00 -
1.424e+04
120.0 -29.24 -551.06 -17.22 0.0 -2066.00 -
4.105e+04
24 147 21.49 0.0 0.02 -88.03 0.0 8.26 -1.76 -17.78 0.0 0.0
21.49
-5471.04 -2133.66 0.04 0.0 60.0 -9.36 -45.77 -17.78 0.0 -1066.83 -
1404.31
120.0 -26.99 -89.79 -17.78 0.0 -2133.66 -
5471.04
24 154 42.90 2.834e+04 0.13 -260.83 0.0 137.54 -229.48 236.18 0.0 0.0
42.90
-4.315e+04 0.0 -0.42 0.0 60.0 137.54 -359.89 236.18 0.0 1.417e+04 -
1.764e+04
120.0 137.54 -490.31 236.18 0.0 2.834e+04 -
4.315e+04
24 155 35.63 0.0 0.04 -260.83 0.0 -141.06 -26.04 -235.40 0.0 0.0
35.63
-1.874e+04 -2.825e+04 0.42 0.0 60.0 -141.06 -156.45 -235.40 0.0 -1.412e+04 -
5438.31
120.0 -141.06 -286.87 -235.40 0.0 -2.825e+04 -
1.874e+04
24 162 45.58 2.516e+04 0.14 -260.83 0.0 163.31 -259.18 209.63 0.0 0.0
45.58
-4.671e+04 0.0 -0.35 0.0 60.0 163.31 -389.59 209.63 0.0 1.258e+04 -
1.942e+04
120.0 163.31 -520.01 209.63 0.0 2.516e+04 -
4.671e+04
24 163 32.95 0.0 0.03 -260.83 0.0 -166.83 3.66 -208.85 0.0 0.0
32.95
-1.518e+04 -2.506e+04 0.35 0.0 60.0 -166.83 -126.75 -208.85 0.0 -1.253e+04 -
3658.85
120.0 -166.83 -257.17 -208.85 0.0 -2.506e+04 -
1.518e+04
24 182 27.86 1.755e+04 0.16 -260.83 0.0 -17.02 -364.24 146.23 0.0 0.0
27.86
-5.931e+04 0.0 -0.27 0.0 60.0 -17.02 -494.65 146.23 0.0 8773.73 -
2.573e+04
120.0 -17.02 -625.07 146.23 0.0 1.755e+04 -
5.931e+04
24 183 2756.11 0.0 6.09e-03 -260.83 0.0 13.50 108.72 -145.45 0.0 0.0
50.67
-2568.50 -1.745e+04 0.27 0.0 60.0 13.50 -21.70 -145.45 0.0 -8726.97
2653.55
120.0 13.50 -152.11 -145.45 0.0 -1.745e+04 -
2568.50
24 186 40.88 1.250e+04 0.10 -260.83 0.0 59.71 -173.65 104.13 0.0 0.0
40.88
-3.645e+04 0.0 -0.19 0.0 60.0 59.71 -304.06 104.13 0.0 6247.58 -
1.429e+04
120.0 59.71 -434.48 104.13 0.0 1.250e+04 -
3.645e+04
24 187 37.65 0.0 0.07 -260.83 0.0 -63.23 -81.87 -103.35 0.0 0.0
37.65
-2.544e+04 -1.240e+04 0.19 0.0 60.0 -63.23 -212.29 -103.35 0.0 -6200.82 -
8786.69
120.0 -63.23 -342.70 -103.35 0.0 -1.240e+04 -
2.544e+04
24 194 42.04 1.110e+04 0.11 -260.83 0.0 70.95 -186.59 92.49 0.0 0.0
42.04
-3.800e+04 0.0 -0.15 0.0 60.0 70.95 -317.01 92.49 0.0 5549.28 -
1.507e+04
120.0 70.95 -447.42 92.49 0.0 1.110e+04 -
3.800e+04
24 195 36.49 0.0 0.06 -260.83 0.0 -74.47 -68.93 -91.71 0.0 0.0
36.49
-2.388e+04 -1.101e+04 0.16 0.0 60.0 -74.47 -199.34 -91.71 0.0 -5502.52 -
8011.08
120.0 -74.47 -329.76 -91.71 0.0 -1.101e+04 -
2.388e+04
24 213 46.97 0.0 0.06 -260.83 0.0 41.97 -41.27 -19.90 0.0 0.0
46.97
-2.056e+04 -2387.68 6.95e-03 0.0 60.0 41.97 -171.68 -19.90 0.0 -1193.84 -
6345.75
120.0 41.97 -302.10 -19.90 0.0 -2387.68 -

Viale Duca Alessandro n. 11 – 43123 Parma
Cell. 335 1403156 – E mail ing.concari@gmail.com
Sito web: studioaire.it – P.IVA 02561480340

2.056e+04
24 214 34.22 7811.21 0.12 -260.83 0.0 -9.54 -235.42 65.09 0.0 0.0
34.22
-4.386e+04 0.0 -0.12 0.0 60.0 -9.54 -365.84 65.09 0.0 3905.60 -
1.800e+04
120.0 -9.54 -496.25 65.09 0.0 7811.21 -
4.386e+04
24 218 40.57 1.008e+04 0.10 -260.83 0.0 47.82 -164.95 84.00 0.0 0.0
40.57
-3.540e+04 0.0 -0.15 0.0 60.0 47.82 -295.37 84.00 0.0 5040.25 -
1.377e+04
120.0 47.82 -425.79 84.00 0.0 1.008e+04 -
3.540e+04
24 219 37.96 0.0 0.07 -260.83 0.0 -51.34 -90.56 -83.22 0.0 0.0
37.96
-2.648e+04 -9986.97 0.15 0.0 60.0 -51.34 -220.98 -83.22 0.0 -4993.48 -
9307.92
120.0 -51.34 -351.39 -83.22 0.0 -9986.97 -
2.648e+04
24 226 41.50 8955.80 0.11 -260.83 0.0 56.86 -175.37 74.63 0.0 0.0
41.50
-3.665e+04 0.0 -0.12 0.0 60.0 56.86 -305.78 74.63 0.0 4477.90 -
1.439e+04
120.0 56.86 -436.20 74.63 0.0 8955.80 -
3.665e+04
24 227 37.03 0.0 0.07 -260.83 0.0 -60.38 -80.15 -73.85 0.0 0.0
37.03
-2.523e+04 -8862.28 0.13 0.0 60.0 -60.38 -210.57 -73.85 0.0 -4431.14 -
8684.14
120.0 -60.38 -340.98 -73.85 0.0 -8862.28 -
2.523e+04
24 245 45.48 0.0 0.06 -260.83 0.0 33.61 -57.78 -16.03 0.0 0.0
45.48
-2.254e+04 -1923.32 5.47e-03 0.0 60.0 33.61 -188.19 -16.03 0.0 -961.66 -
7336.88
120.0 33.61 -318.61 -16.03 0.0 -1923.32 -
2.254e+04
24 246 35.19 6311.33 0.11 -260.83 0.0 -8.16 -214.81 52.59 0.0 0.0
35.19
-4.139e+04 0.0 -0.09 0.0 60.0 -8.16 -345.22 52.59 0.0 3155.67 -
1.676e+04
120.0 -8.16 -475.64 52.59 0.0 6311.33 -
4.139e+04
24 273 55.98 710.39 0.12 -376.03 0.0 3.33 -176.61 -1.13 0.0 0.0
55.98
-4.370e+04 -5.16 -0.02 14.10 60.0 3.33 -364.62 5.92 0.0 143.73 -
1.618e+04
120.0 3.33 -552.64 12.97 0.0 710.39 -
4.370e+04
24 285 15.27 1064.71 0.04 -88.03 0.0 8.69 -69.37 -2.88 0.0 0.0
15.27
-1.359e+04 -21.10 -0.02 23.50 60.0 8.69 -113.39 8.87 0.0 179.92 -
5467.59
120.0 8.69 -157.40 20.62 0.0 1064.71 -
1.359e+04
24 289 43.83 1107.87 0.10 -289.63 0.0 7.30 -145.11 -2.52 0.0 0.0
43.83
-3.475e+04 -15.71 -0.02 23.50 60.0 7.30 -289.93 9.23 0.0 201.49 -
1.301e+04
120.0 7.30 -434.75 20.98 0.0 1107.87 -
3.475e+04
24 301 58.67 0.0 0.11 -376.03 0.0 2.29 -153.19 -6.35 0.0 0.0
58.67
-4.089e+04 -761.94 -9.11e-03 0.0 60.0 -4.76 -341.21 -6.35 0.0 -380.97 -
1.477e+04
120.0 -11.81 -529.22 -6.35 0.0 -761.94 -
4.089e+04
24 319 19.26 0.0 0.03 -88.03 0.0 5.31 -22.12 -11.83 0.0 0.0
19.26
-7916.55 -1419.19 0.02 0.0 60.0 -6.43 -66.13 -11.83 0.0 -709.59 -
2628.19
120.0 -18.18 -110.15 -11.83 0.0 -1419.19 -
7916.55
24 323 47.82 0.0 0.08 -289.63 0.0 3.93 -97.86 -11.47 0.0 0.0
47.82
-2.907e+04 -1376.03 0.02 0.0 60.0 -7.82 -242.67 -11.47 0.0 -688.01 -
1.017e+04
120.0 -19.57 -387.49 -11.47 0.0 -1376.03 -
2.907e+04
24 325 14.78 9.77 0.04 -88.03 0.0 -0.57 -62.84 0.08 0.0 0.0
14.78
-1.281e+04 0.0 5.10e-05 0.0 60.0 -0.57 -106.85 0.08 0.0 4.88 -
5075.93
120.0 -0.57 -150.87 0.08 0.0 9.77 -
1.281e+04
24 327 39.26 46.76 0.09 -260.83 0.0 -1.76 -127.76 0.39 0.0 0.0
39.26
-3.094e+04 0.0 2.80e-04 0.0 60.0 -1.76 -258.17 0.39 0.0 23.38 -
1.154e+04
120.0 -1.76 -388.59 0.39 0.0 46.76 -
3.094e+04
24 331 43.35 52.93 0.09 -289.63 0.0 -1.96 -138.58 0.44 0.0 0.0

Viale Duca Alessandro n. 11 – 43123 Parma
Cell. 335 1403156 – E mail ing.concari@gmail.com
Sito web: studioaire.it – P.IVA 02561480340

43.35													
		-3.396e+04	0.0	3.18e-04	0.0	60.0	-1.96	-283.39	0.44	0.0	26.46	-	
1.262e+04													
						120.0	-1.96	-428.21	0.44	0.0	52.93	-	
3.396e+04													
24	345	14.83	217.76	0.04	-88.03	0.0	1.12	-63.32	-0.53	0.0	0.0		
14.83													
		-1.287e+04	-3.62	-1.02e-03	4.70	60.0	1.12	-107.34	1.81	0.0	38.39	-	
5104.91													
						120.0	1.12	-151.35	4.16	0.0	217.76	-	
1.287e+04													
24	347	39.31	254.75	0.09	-260.83	0.0	-0.07	-128.24	-0.23	0.0	0.0		
39.31													
		-3.100e+04	-0.60	-8.82e-04	4.70	60.0	-0.07	-258.66	2.12	0.0	56.89	-	
1.157e+04													
						120.0	-0.07	-389.07	4.47	0.0	254.75	-	
3.100e+04													
24	349	15.73	0.0	0.04	-88.03	0.0	0.77	-55.52	-2.28	0.0	0.0		
15.73													
		-1.193e+04	-273.02	1.96e-03	0.0	60.0	-1.58	-99.53	-2.28	0.0	-136.51	-	
4635.74													
						120.0	-3.93	-143.55	-2.28	0.0	-273.02	-	
1.193e+04													
24	351	40.21	0.0	0.08	-260.83	0.0	-0.42	-120.44	-1.97	0.0	0.0		
40.21													
		-3.006e+04	-236.03	2.12e-03	0.0	60.0	-2.77	-250.85	-1.97	0.0	-118.01	-	
1.110e+04													
						120.0	-5.12	-381.27	-1.97	0.0	-236.03	-	
3.006e+04													
25	5	2.540e+04	298.11	-0.06	-77.00	0.0	-1.06	-173.17	-2.48	80.80	298.11		
2.540e+04													
		0.0	0.0	-0.02	0.0	60.0	-1.06	-211.67	-2.48	80.80	149.05		
1.385e+04													
						120.0	-1.06	-250.17	-2.48	80.80	0.0	0.0	
25	7	2.392e+04	593.15	-0.06	-77.00	0.0	-0.69	-160.82	-4.94	80.04	593.15		
2.392e+04													
		0.0	0.0	0.04	0.0	60.0	-0.69	-199.32	-4.94	80.04	296.58		
1.311e+04													
						120.0	-0.69	-237.82	-4.94	80.04	0.0	0.0	
25	45	2.566e+04	0.0	-0.06	-77.00	0.0	22.86	-175.34	5.11	81.01	-613.31		
2.566e+04													
		0.0	-613.31	-8.64e-03	0.0	60.0	12.28	-213.84	5.11	81.01	-306.66		
1.399e+04													
						120.0	1.71	-252.34	5.11	81.01	0.0	0.0	
25	83	3681.03	0.0	-0.01	-59.23	0.0	39.97	-1.06	10.86	14.75	-1302.83		
3681.03													
		0.0	-1302.83	0.04	0.0	60.0	22.35	-30.68	10.86	14.75	-651.41		
2728.97													
						120.0	4.73	-60.29	10.86	14.75	0.0	0.0	
25	145	201.07	0.0	-0.03	-59.23	0.0	17.41	45.12	45.96	22.25	-3400.53	-	
1861.10													
		-1861.10	-3400.53	-0.04	-35.24	60.0	17.41	15.51	28.34	22.25	-1171.61	-	
42.09													
						120.0	17.41	-14.11	10.72	22.25	0.0	0.0	
25	147	0.0	0.0	-0.03	-59.23	0.0	17.78	57.48	43.50	21.49	-3105.49	-	
3343.17													
		-3343.17	-3105.49	8.33e-03	-35.24	60.0	17.78	27.86	25.88	21.49	-1024.08	-	
783.12													
						120.0	17.78	-1.76	8.26	21.49	0.0	0.0	
25	161	1.524e+04	0.0	-0.03	-59.23	0.0	132.55	-97.39	154.66	53.05	-1.856e+04		
1.524e+04													
		0.0	-1.856e+04	0.15	0.0	60.0	132.55	-127.01	154.66	53.05	-9279.60		
8508.91													
						120.0	132.55	-156.62	154.66	53.05	0.0	0.0	
25	164	8313.43	1.898e+04	-0.03	-59.23	0.0	-133.33	-39.66	-158.18	25.48	1.898e+04		
8313.43													
		0.0	0.0	-0.14	0.0	60.0	-133.33	-69.28	-158.18	25.48	9490.83		
5045.18													
						120.0	-133.33	-98.89	-158.18	25.48	0.0	0.0	
25	173	0.0	0.0	-0.05	-59.23	0.0	133.07	63.40	151.80	54.73	-1.822e+04	-	
4054.70													
		-4054.70	-1.822e+04	0.05	0.0	60.0	133.07	33.79	151.80	54.73	-9107.80	-	
1138.89													
						120.0	133.07	4.17	151.80	54.73	0.0	0.0	
25	176	2.761e+04	1.864e+04	-0.01	-59.23	0.0	-133.85	-200.46	-155.32	23.80	1.864e+04		
2.761e+04													
		0.0	0.0	-0.05	0.0	60.0	-133.85	-230.08	-155.32	23.80	9319.02		
1.469e+04													
						120.0	-133.85	-259.69	-155.32	23.80	0.0	0.0	
25	182	3.782e+04	5136.34	-0.01	-59.23	0.0	-42.22	-285.57	-42.80	27.86	5136.34		
3.782e+04													
		0.0	0.0	-0.01	0.0	60.0	-42.22	-315.18	-42.80	27.86	2568.17		
1.980e+04													
						120.0	-42.22	-344.80	-42.80	27.86	0.0	0.0	
25	183	0.0	0.0	-0.05	-59.23	0.0	41.44	148.51	39.28	50.67	-4713.90	-	
1.427e+04													
		-1.427e+04	-4713.90	0.01	0.0	60.0	41.44	118.89	39.28	50.67	-2356.95	-	
6245.22													
						120.0	41.44	89.28	39.28	50.67	0.0	0.0	
25	193	1.319e+04	0.0	-0.03	-59.23	0.0	58.50	-80.31	67.44	45.34	-8092.38		
1.319e+04													
		0.0	-8092.38	0.07	0.0	60.0	58.50	-109.92	67.44	45.34	-4046.19		

Viale Duca Alessandro n. 11 – 43123 Parma
Cell. 335 1403156 – E mail ing.concari@gmail.com
Sito web: studioaire.it – P.IVA 02561480340

7483.85													
						120.0	58.50	-139.54	67.44	45.34	0.0	0.0	
25	196	1.036e+04	8514.82	-0.03	-59.23	0.0	-59.28	-56.75	-70.96	33.19	8514.82		
1.036e+04													
		0.0	0.0	-0.06	0.0	60.0	-59.28	-86.36	-70.96	33.19	4257.41		
6070.24													
						120.0	-59.28	-115.98	-70.96	33.19	0.0	0.0	
25	205	4454.84	0.0	-0.04	-59.23	0.0	59.95	-7.51	67.37	46.10	-8084.91		
4454.84													
		0.0	-8084.91	0.02	0.0	60.0	59.95	-37.12	67.37	46.10	-4042.46		
3115.88													
						120.0	59.95	-66.74	67.37	46.10	0.0	0.0	
25	208	1.910e+04	8507.35	-0.02	-59.23	0.0	-60.73	-129.55	-70.89	32.43	8507.35		
1.910e+04													
		0.0	0.0	-0.02	0.0	60.0	-60.73	-159.16	-70.89	32.43	4253.68		
1.044e+04													
						120.0	-60.73	-188.78	-70.89	32.43	0.0	0.0	
25	214	2.363e+04	2561.39	-0.02	-59.23	0.0	-20.74	-167.26	-21.34	34.22	2561.39		
2.363e+04													
		0.0	0.0	-4.44e-03	0.0	60.0	-20.74	-196.88	-21.34	34.22	1280.70		
1.270e+04													
						120.0	-20.74	-226.49	-21.34	34.22	0.0	0.0	
25	215	852.99	0.0	-0.04	-59.23	0.0	19.97	30.21	17.82	44.31	-2138.95	-	
70.94													
		-70.94	-2138.95	8.12e-03	0.0	60.0	19.97	0.59	17.82	44.31	-1069.48		
852.99													
						120.0	19.97	-29.02	17.82	44.31	0.0	0.0	
25	237	5809.85	0.0	-0.04	-59.23	0.0	48.55	-18.80	54.25	44.78	-6510.57		
5809.85													
		0.0	-6510.57	0.02	0.0	60.0	48.55	-48.42	54.25	44.78	-3255.29		
3793.39													
						120.0	48.55	-78.03	54.25	44.78	0.0	0.0	
25	239	3891.52	0.0	-0.04	-59.23	0.0	26.88	-2.81	28.51	42.64	-3421.74		
3891.52													
		0.0	-3421.74	-0.02	0.0	60.0	26.88	-32.43	28.51	42.64	-1710.87		
2834.22													
						120.0	26.88	-62.04	28.51	42.64	0.0	0.0	
25	240	1.774e+04	6933.01	-0.02	-59.23	0.0	-49.32	-118.26	-57.78	33.75	6933.01		
1.774e+04													
		0.0	0.0	-0.02	0.0	60.0	-49.32	-147.87	-57.78	33.75	3466.51		
9760.69													
						120.0	-49.32	-177.49	-57.78	33.75	0.0	0.0	
25	246	2.135e+04	2120.29	-0.02	-59.23	0.0	-16.96	-148.34	-17.67	35.19	2120.29		
2.135e+04													
		0.0	0.0	3.65e-03	0.0	60.0	-16.96	-177.96	-17.67	35.19	1060.15		
1.157e+04													
						120.0	-16.96	-207.57	-17.67	35.19	0.0	0.0	
25	253	1.746e+04	207.90	-0.04	-59.23	0.0	-0.72	-115.92	-1.73	55.84	207.90		
1.746e+04													
		0.0	0.0	-0.01	0.0	60.0	-0.72	-145.54	-1.73	55.84	103.95		
9620.88													
						120.0	-0.72	-175.16	-1.73	55.84	0.0	0.0	
25	255	1.648e+04	404.59	-0.04	-59.23	0.0	-0.47	-107.69	-3.37	55.33	404.59		
1.648e+04													
		0.0	0.0	0.02	0.0	60.0	-0.47	-137.31	-3.37	55.33	202.30		
9126.86													
						120.0	-0.47	-166.92	-3.37	55.33	0.0	0.0	
25	273	1.764e+04	0.0	-0.04	-59.23	0.0	15.23	-117.38	3.33	55.98	-399.72		
1.764e+04													
		0.0	-399.72	-5.54e-03	0.0	60.0	8.18	-146.99	3.33	55.98	-199.86		
9707.96													
						120.0	1.13	-176.61	3.33	55.98	0.0	0.0	
25	287	3782.90	0.0	-0.01	-59.23	0.0	26.62	-1.91	7.05	14.76	-845.66		
3782.90													
		0.0	-845.66	0.03	0.0	60.0	14.87	-31.52	7.05	14.76	-422.83		
2779.91													
						120.0	3.13	-61.14	7.05	14.76	0.0	0.0	
25	317	932.54	0.0	-0.02	-59.23	0.0	11.58	28.88	30.45	19.76	-2244.13		
88.15													
		0.0	-2244.13	-0.03	-23.50	60.0	11.58	-0.73	18.70	19.76	-769.62		
932.54													
						120.0	11.58	-30.35	6.95	19.76	0.0	0.0	
25	319	495.47	0.0	-0.02	-59.23	0.0	11.83	37.11	28.81	19.26	-2047.43	-	
899.89													
		-899.89	-2047.43	5.82e-03	-23.50	60.0	11.83	7.50	17.06	19.26	-671.28		
438.52													
						120.0	11.83	-22.12	5.31	19.26	0.0	0.0	
25	325	3986.66	68.68	-0.01	-59.23	0.0	-0.08	-3.61	-0.57	14.78	68.68		
3986.66													
		0.0	0.0	1.64e-03	0.0	60.0	-0.08	-33.22	-0.57	14.78	34.34		
2881.79													
						120.0	-0.08	-62.84	-0.57	14.78	0.0	0.0	
25	327	1.178e+04	211.22	-0.03	-59.23	0.0	-0.39	-68.53	-1.76	39.26	211.22		
1.178e+04													
		0.0	0.0	4.94e-03	0.0	60.0	-0.39	-98.14	-1.76	39.26	105.61		
6777.04													
						120.0	-0.39	-127.76	-1.76	39.26	0.0	0.0	
25	331	1.308e+04	234.98	-0.03	-59.23	0.0	-0.44	-79.35	-1.96	43.35	234.98		
1.308e+04													
		0.0	0.0	5.49e-03	0.0	60.0	-0.44	-108.96	-1.96	43.35	117.49		
7426.25													
						120.0	-0.44	-138.58	-1.96	43.35	0.0	0.0	

Viale Duca Alessandro n. 11 – 43123 Parma
Cell. 335 1403156 – E mail ing.concari@gmail.com
Sito web: studioaire.it – P.IVA 02561480340

25	333	4398.35	0.0	-0.01	-59.23	0.0	-0.19	-7.04	0.11	14.99	-13.27	4398.35	
		0.0	-13.27	-0.01	0.0	60.0	-0.19	-36.65	0.11	14.99	-6.64	3087.63	
						120.0	-0.19	-66.27	0.11	14.99	0.0	0.0	
25	337	1.219e+04	129.26	-0.03	-59.23	0.0	-0.49	-71.96	-1.08	39.48	129.26	1.219e+04	
		0.0	0.0	-9.39e-03	0.0	60.0	-0.49	-101.57	-1.08	39.48	64.63	6982.88	
						120.0	-0.49	-131.19	-1.08	39.48	0.0	0.0	
25	339	1.137e+04	293.18	-0.03	-59.23	0.0	-0.29	-65.10	-2.44	39.05	293.18	1.137e+04	
		0.0	0.0	0.02	0.0	60.0	-0.29	-94.71	-2.44	39.05	146.59	6571.20	
						120.0	-0.29	-124.33	-2.44	39.05	0.0	0.0	
25	345	4044.71	0.0	-0.01	-59.23	0.0	5.23	-4.09	1.12	14.83	-133.85	4044.71	
		0.0	-133.85	3.14e-03	0.0	60.0	2.88	-33.71	1.12	14.83	-66.93	2910.82	
						120.0	0.53	-63.32	1.12	14.83	0.0	0.0	
25	349	3122.13	0.0	-0.01	-59.23	0.0	2.28	3.71	5.47	15.73	-374.21	3108.15	
		0.0	-374.21	-1.12e-03	-4.70	60.0	2.28	-25.90	3.12	15.73	-116.62	2442.54	
						120.0	2.28	-55.52	0.77	15.73	0.0	0.0	
26	5	4.507e+04	751.02	0.02	1366.10	0.0	459.48	-688.06	4.19	-1.73	-712.14	4.507e+04	
		-1.537e+04	-712.14	-3.30e-03	0.0	174.4	54.21	-5.01	4.19	-1.73	19.44	-1.537e+04	
						348.8	-351.07	678.04	4.19	-1.73	751.02	4.332e+04	
26	79	3.791e+04	2588.47	-0.01	1042.10	0.0	294.22	-509.49	28.95	-10.91	1177.78	3.388e+04	
		-9543.43	-6593.16	0.08	-102.45	174.4	-14.93	11.56	-22.28	-10.91	1759.63	-9543.43	
						348.8	-324.09	532.61	-73.50	-10.91	-6593.16	3.791e+04	
26	101	5.035e+04	1755.93	0.04	1334.73	0.0	-97.33	-712.86	7.71	-10.51	-934.63	5.035e+04	
		-1.586e+04	-934.63	-0.02	0.0	174.4	-529.04	-45.49	7.71	-10.51	410.65	-1.578e+04	
						348.8	-960.75	621.87	7.71	-10.51	1755.93	3.448e+04	
26	143	4.308e+04	787.64	0.06	989.82	0.0	-625.36	-554.47	0.22	-17.68	709.95	4.308e+04	
		-1.110e+04	709.95	-0.03	0.0	174.4	-978.57	-59.56	0.22	-17.68	748.80	-1.047e+04	
						348.8	-1331.78	435.35	0.22	-17.68	787.64	2.230e+04	
26	162	4.298e+04	1.105e+04	-0.11	652.08	0.0	1955.02	-225.21	-56.02	-35.96	1.105e+04	7671.25	
		-5743.27	-9067.93	0.28	0.0	174.4	1761.57	100.83	-56.02	-35.96	991.76	-3106.48	
						348.8	1568.12	426.87	-56.02	-35.96	-9067.93	4.298e+04	
26	163	3.726e+04	8995.39	0.11	652.08	0.0	-1541.02	-427.29	55.24	33.29	-1.085e+04	3.726e+04	
		-1.155e+04	-1.085e+04	-0.29	0.0	174.4	-1734.47	-101.25	55.24	33.29	-928.66	-8897.23	
						348.8	-1927.92	224.79	55.24	33.29	8995.39	1807.60	
26	182	6.112e+04	-5060.33	-0.20	652.08	0.0	3434.98	-134.69	22.23	34.05	-5060.33	-5773.86	
		-1.056e+04	-7747.42	0.50	0.0	174.4	3241.53	191.35	22.23	34.05	-6403.88	-759.57	
						348.8	3048.08	517.39	22.23	34.05	-7747.42	6.112e+04	
26	183	5.071e+04	7674.88	0.20	652.08	0.0	-3020.99	-517.80	-23.01	-36.71	5259.08	5.071e+04	
		-2.109e+04	5259.08	-0.51	0.0	174.4	-3214.44	-191.76	-23.01	-36.71	6466.98	-1.124e+04	
						348.8	-3407.89	134.27	-23.01	-36.71	7674.88	-1.633e+04	
26	194	3.164e+04	4985.14	-0.05	652.08	0.0	991.01	-280.87	-25.17	-16.35	4985.14	1.582e+04	
		-5247.08	-4051.29	0.12	0.0	174.4	797.56	45.17	-25.17	-16.35	466.93	-4702.78	
						348.8	604.11	371.21	-25.17	-16.35	-4051.29	3.164e+04	
26	195	2.911e+04	3978.74	0.05	652.08	0.0	-577.01	-371.63	24.40	13.69	-4786.40	2.911e+04	
		-7854.35	-4786.40	-0.13	0.0	174.4	-770.46	-45.59	24.40	13.69	-403.83	-7300.93	
						348.8	-963.91	280.45	24.40	13.69	3978.74	1.315e+04	
26	214	4.007e+04	-2387.27	-0.09	652.08	0.0	1680.14	-238.78	10.44	14.78	-2387.27	9571.54	
		-5646.01	-3530.31	0.23	0.0	174.4	1486.69	87.26	10.44	14.78	-2958.79	-3610.22	
						348.8	1293.24	413.30	10.44	14.78	-3530.31	4.007e+04	
26	215	3.536e+04	3457.77	0.09	652.08	0.0	-1266.15	-413.72	-11.21	-17.45	2586.01		

Viale Duca Alessandro n. 11 – 43123 Parma
Cell. 335 1403156 – E mail ing.concari@gmail.com
Sito web: studioaire.it – P.IVA 02561480340

3.536e+04												
		-1.045e+04	2586.01	-0.23	0.0	174.4	-1459.60	-87.68	-11.21	-17.45	3021.89	-
8393.49												
						348.8	-1653.05	238.36	-11.21	-17.45	3457.77	
4715.38												
26	226	2.988e+04	4049.99	-0.04	652.08	0.0	841.67	-289.50	-20.42	-13.40	4049.99	
1.709e+04												
		-5305.49	-3280.30	0.10	0.0	174.4	648.22	36.54	-20.42	-13.40	384.85	-
4950.13												
						348.8	454.77	362.58	-20.42	-13.40	-3280.30	
2.988e+04												
26	227	2.785e+04	3207.76	0.04	652.08	0.0	-427.67	-362.99	19.65	10.74	-3851.25	
2.785e+04												
		-7418.06	-3851.25	-0.10	0.0	174.4	-621.12	-36.96	19.65	10.74	-321.75	-
7053.58												
						348.8	-814.57	289.08	19.65	10.74	3207.76	
1.491e+04												
26	246	3.669e+04	-1923.42	-0.08	652.08	0.0	1398.29	-255.50	8.41	11.69	-1923.42	
1.204e+04												
		-5372.74	-2863.02	0.18	0.0	174.4	1204.85	70.54	8.41	11.69	-2393.22	-
4067.59												
						348.8	1011.40	396.58	8.41	11.69	-2863.02	
3.669e+04												
26	247	3.290e+04	2790.48	0.08	652.08	0.0	-984.30	-397.00	-9.19	-14.36	2122.16	
3.290e+04												
		-9259.49	2122.16	-0.19	0.0	174.4	-1177.75	-70.96	-9.19	-14.36	2456.32	-
7936.12												
						348.8	-1371.20	255.08	-9.19	-14.36	2790.48	
8095.31												
26	253	3.135e+04	499.23	0.01	940.08	0.0	315.82	-473.68	2.78	-1.22	-470.42	
3.135e+04												
		-1.028e+04	-470.42	-2.33e-03	0.0	174.4	36.93	-3.64	2.78	-1.22	14.40	-
1.028e+04												
						348.8	-241.96	466.39	2.78	-1.22	499.23	
3.008e+04												
26	291	2.647e+04	1728.18	-8.05e-03	724.08	0.0	205.65	-354.64	19.28	-7.34	789.53	
2.389e+04												
		-6390.58	-4396.89	0.05	-68.30	174.4	-9.16	7.40	-14.87	-7.34	1174.53	-
6390.58												
						348.8	-223.97	369.44	-49.02	-7.34	-4396.89	
2.647e+04												
26	301	3.487e+04	1169.17	0.03	919.17	0.0	-55.39	-490.22	5.13	-7.08	-618.74	
3.487e+04												
		-1.059e+04	-618.74	-0.01	0.0	174.4	-351.90	-30.64	5.13	-7.08	275.21	-
1.055e+04												
						348.8	-648.41	428.95	5.13	-7.08	1169.17	
2.419e+04												
26	323	3.002e+04	523.64	0.04	689.22	0.0	-407.40	-384.63	0.13	-11.86	477.64	
3.002e+04												
		-7411.93	477.64	-0.02	0.0	174.4	-651.58	-40.02	0.13	-11.86	500.64	-
7009.07												
						348.8	-895.76	304.60	0.13	-11.86	523.64	
1.606e+04												
26	327	2.247e+04	99.37	3.10e-03	652.08	0.0	207.00	-326.25	-0.39	-1.33	99.37	
2.247e+04												
		-6001.86	-36.27	-2.49e-03	0.0	174.4	13.55	-0.21	-0.39	-1.33	31.55	-
6001.86												
						348.8	-179.90	325.83	-0.39	-1.33	-36.27	
2.239e+04												
26	331	2.463e+04	110.51	4.25e-03	724.08	0.0	229.62	-361.90	-0.43	-1.46	110.51	
2.458e+04												
		-6966.80	-40.50	-2.73e-03	0.0	174.4	14.81	0.14	-0.43	-1.46	35.00	-
6966.80												
						348.8	-200.00	362.18	-0.43	-1.46	-40.50	
2.463e+04												
26	339	2.344e+04	611.32	-5.05e-03	652.08	0.0	191.71	-322.22	-3.18	-1.86	611.32	
2.211e+04												
		-5656.79	-496.62	-5.81e-03	0.0	174.4	-1.74	3.82	-3.18	-1.86	57.35	-
5656.79												
						348.8	-195.19	329.86	-3.18	-1.86	-496.62	
2.344e+04												
26	347	2.251e+04	340.01	2.76e-03	652.08	0.0	205.87	-325.76	4.22	-2.38	112.31	
2.242e+04												
		-5969.43	-797.06	9.04e-03	-13.66	174.4	12.42	0.28	-2.61	-2.38	253.26	-
5969.43												
						348.8	-181.03	326.31	-9.44	-2.38	-797.06	
2.251e+04												
26	351	2.364e+04	187.04	8.71e-03	645.11	0.0	83.26	-331.76	0.39	-3.28	49.93	
2.364e+04												
		-6093.13	49.93	-5.38e-03	0.0	174.4	-116.06	-9.21	0.39	-3.28	118.49	-
6093.13												
						348.8	-315.39	313.35	0.39	-3.28	187.04	
2.043e+04												
27	23	-1.194e+04	1683.45	0.06	-1042.10	0.0	214.25	456.29	10.91	11.26	-2122.50	-
4.679e+04												
		-6.938e+04	-2122.50	0.02	0.0	174.4	-94.91	-64.76	10.91	11.26	-219.53	-
1.264e+04												
						348.8	-404.07	-585.81	10.91	11.26	1683.45	-
6.938e+04												
27	27	-3693.34	991.48	0.02	-220.08	0.0	10.93	100.69	6.33	6.46	-1216.28	-
1.171e+04												
		-1.497e+04	-1216.28	0.01	0.0	174.4	-54.36	-9.35	6.33	6.46	-112.40	-

Viale Duca Alessandro n. 11 – 43123 Parma
Cell. 335 1403156 – E mail ing.concari@gmail.com
Sito web: studioaire.it – P.IVA 02561480340

3747.28												
						348.8	-119.65	-119.39	6.33	6.46	991.48	-
1.497e+04												
27	45	-1.822e+04	3165.58	0.08	-1366.10	0.0	376.00	584.96	-21.94	10.25	98.86	-
6.189e+04												
		-9.611e+04	-1263.99	-0.05	61.47	174.4	-29.28	-98.09	8.79	10.25	-1048.18	-
1.943e+04												
						348.8	-434.56	-781.14	39.53	10.25	3165.58	-
9.611e+04												
27	79	-1.297e+04	5497.20	0.06	-1042.10	0.0	253.90	454.91	-35.53	17.56	21.55	-
4.761e+04												
		-7.068e+04	-2113.20	-0.08	102.45	174.4	-55.25	-66.14	15.70	17.56	-1707.95	-
1.370e+04												
						348.8	-364.41	-587.19	66.92	17.56	5497.20	-
7.068e+04												
27	101	-1.871e+04	-155.53	0.08	-1334.73	0.0	351.76	546.11	0.11	-4.97	-192.87	-
5.749e+04												
		-9.979e+04	-192.87	5.01e-03	0.0	174.4	-79.95	-121.26	0.11	-4.97	-174.20	-
2.044e+04												
						348.8	-511.66	-788.63	0.11	-4.97	-155.53	-
9.979e+04												
27	103	-1.617e+04	794.79	0.07	-1334.73	0.0	300.87	555.81	6.09	0.90	-1330.01	-
5.644e+04												
		-9.535e+04	-1330.01	0.01	0.0	174.4	-130.84	-111.55	6.09	0.90	-267.61	-
1.769e+04												
						348.8	-562.55	-778.92	6.09	0.90	794.79	-
9.535e+04												
27	153	-9720.74	3686.62	0.04	-652.08	0.0	-514.47	276.01	24.17	19.33	-4921.36	-
3.033e+04												
		-4.720e+04	-4921.36	-0.53	0.0	174.4	-707.92	-50.03	24.17	19.33	-617.37	-
1.033e+04												
						348.8	-901.37	-376.07	24.17	19.33	3686.62	-
4.720e+04												
27	156	-9331.22	3440.47	0.04	-652.08	0.0	835.23	283.84	-16.71	-11.24	3440.47	-
3.063e+04												
		-4.592e+04	-2565.11	0.54	0.0	174.4	641.78	-42.19	-16.71	-11.24	437.68	-
9843.04												
						348.8	448.33	-368.23	-16.71	-11.24	-2565.11	-
4.592e+04												
27	162	-1.208e+04	8005.98	0.05	-652.08	0.0	-263.74	357.56	45.00	47.86	-8082.73	-
4.656e+04												
		-4.656e+04	-8082.73	-0.29	0.0	174.4	-457.19	31.52	45.00	47.86	-38.38	-
1.236e+04												
						348.8	-650.64	-294.52	45.00	47.86	8005.98	-
3.502e+04												
27	166	-1.234e+04	8110.51	0.05	-652.08	0.0	-313.65	363.66	45.20	48.17	-7990.03	-
4.803e+04												
		-4.803e+04	-7990.03	-0.49	0.0	174.4	-507.10	37.63	45.20	48.17	60.24	-
1.275e+04												
						348.8	-700.55	-288.41	45.20	48.17	8110.51	-
3.434e+04												
27	183	3118.48	4911.32	0.02	-652.08	0.0	75.27	137.30	-30.73	-62.65	4911.32	-
1774.42												
		-6.809e+04	-6053.52	0.43	0.0	174.4	-118.18	-188.74	-30.73	-62.65	-571.10	-
6497.43												
						348.8	-311.63	-514.78	-30.73	-62.65	-6053.52	-
6.809e+04												
27	185	-9585.38	1994.15	0.04	-652.08	0.0	-137.34	277.60	12.97	10.32	-2606.74	-
3.030e+04												
		-4.693e+04	-2606.74	-0.23	0.0	174.4	-330.79	-48.44	12.97	10.32	-306.30	-
1.018e+04												
						348.8	-524.24	-374.48	12.97	10.32	1994.15	-
4.693e+04												
27	188	-9466.57	1125.86	0.04	-652.08	0.0	458.10	282.25	-5.51	-2.23	1125.86	-
3.065e+04												
		-4.620e+04	-872.64	0.24	0.0	174.4	264.65	-43.79	-5.51	-2.23	126.61	-
9993.86												
						348.8	71.20	-369.83	-5.51	-2.23	-872.64	-
4.620e+04												
27	194	-1.108e+04	3935.25	0.05	-652.08	0.0	-25.64	314.77	22.37	23.79	-4037.37	-
3.768e+04												
		-4.136e+04	-4037.37	-0.12	0.0	174.4	-219.09	-11.27	22.37	23.79	-51.06	-
1.108e+04												
						348.8	-412.54	-337.31	22.37	23.79	3935.25	-
4.136e+04												
27	198	-1.126e+04	3998.10	0.05	-652.08	0.0	-47.44	317.46	22.55	23.90	-4013.41	-
3.833e+04												
		-4.107e+04	-4013.41	-0.22	0.0	174.4	-240.89	-8.58	22.55	23.90	-7.66	-
1.126e+04												
						348.8	-434.34	-334.62	22.55	23.90	3998.10	-
4.107e+04												
27	215	-5160.51	1855.89	0.03	-652.08	0.0	120.17	214.87	-12.07	-26.67	1855.89	-
1.741e+04												
		-5.640e+04	-2463.06	0.20	0.0	174.4	-73.28	-111.17	-12.07	-26.67	-303.58	-
8473.55												
						348.8	-266.73	-437.21	-12.07	-26.67	-2463.06	-
5.640e+04												
27	217	-9568.98	1726.98	0.04	-652.08	0.0	-79.76	277.94	11.22	9.02	-2249.84	-
3.031e+04												
		-4.687e+04	-2249.84	-0.19	0.0	174.4	-273.20	-48.10	11.22	9.02	-261.43	-
1.016e+04												
						348.8	-466.65	-374.13	11.22	9.02	1726.98	-

Viale Duca Alessandro n. 11 – 43123 Parma
Cell. 335 1403156 – E mail ing.concari@gmail.com
Sito web: studioaire.it – P.IVA 02561480340

4.687e+04												
27	220	-9482.97	768.95	0.04	-652.08	0.0	400.51	281.91	-3.76	-0.93	768.95	-
3.064e+04												
		-4.626e+04	-605.48	0.19	0.0	174.4	207.06	-44.13	-3.76	-0.93	81.74	-
1.001e+04												
						348.8	13.62	-370.17	-3.76	-0.93	-605.48	-
4.626e+04												
27	226	-1.089e+04	3299.14	0.04	-652.08	0.0	10.55	308.14	18.84	20.05	-3410.39	-
3.630e+04												
		-4.234e+04	-3410.39	-0.10	0.0	174.4	-182.90	-17.90	18.84	20.05	-55.62	-
1.089e+04												
						348.8	-376.35	-343.94	18.84	20.05	3299.14	-
4.234e+04												
27	230	-1.104e+04	3350.69	0.04	-652.08	0.0	-7.01	310.23	18.99	20.09	-3392.14	-
3.682e+04												
		-4.212e+04	-3392.14	-0.17	0.0	174.4	-200.46	-15.81	18.99	20.09	-20.73	-
1.104e+04												
						348.8	-393.91	-341.84	18.99	20.09	3350.69	-
4.212e+04												
27	247	-6235.88	1365.96	0.03	-652.08	0.0	127.50	227.31	-9.09	-20.82	1365.96	-
1.991e+04												
		-5.453e+04	-1890.30	0.16	0.0	174.4	-65.95	-98.73	-9.09	-20.82	-262.17	-
8785.61												
						348.8	-259.40	-424.77	-9.09	-20.82	-1890.30	-
5.453e+04												
27	259	-4398.39	727.51	0.02	-220.08	0.0	25.07	97.99	4.67	4.83	-900.41	-
1.201e+04												
		-1.621e+04	-900.41	8.08e-03	0.0	174.4	-40.22	-12.05	4.67	4.83	-86.45	-
4511.12												
						348.8	-105.51	-122.09	4.67	4.83	727.51	-
1.621e+04												
27	263	-8735.48	1148.90	0.04	-724.08	0.0	149.94	316.54	7.45	7.72	-1450.82	-
3.287e+04												
		-4.874e+04	-1450.82	0.01	0.0	174.4	-64.87	-45.50	7.45	7.72	-150.96	-
9234.09												
						348.8	-279.68	-407.54	7.45	7.72	1148.90	-
4.874e+04												
27	273	-1.292e+04	2136.99	0.06	-940.08	0.0	257.78	402.32	-14.45	7.04	30.08	-
4.294e+04												
		-6.656e+04	-855.07	-0.03	40.98	174.4	-21.11	-67.72	6.04	7.04	-703.39	-
1.376e+04												
						348.8	-300.00	-537.76	26.53	7.04	2136.99	-
6.656e+04												
27	291	-9421.57	3691.41	0.04	-724.08	0.0	176.38	315.62	-23.51	11.92	-21.46	-
3.342e+04												
		-4.961e+04	-1421.21	-0.05	68.30	174.4	-38.43	-46.42	10.64	11.92	-1143.24	-
9940.27												
						348.8	-253.24	-408.46	44.79	11.92	3691.41	-
4.961e+04												
27	301	-1.325e+04	-77.08	0.06	-919.17	0.0	241.62	376.42	0.25	-3.10	-164.40	-
4.001e+04												
		-6.902e+04	-164.40	3.62e-03	0.0	174.4	-54.89	-83.17	0.25	-3.10	-120.74	-
1.443e+04												
						348.8	-351.40	-542.75	0.25	-3.10	-77.08	-
6.902e+04												
27	303	-1.155e+04	556.47	0.05	-919.17	0.0	207.69	382.89	4.24	0.81	-922.49	-
3.930e+04												
		-6.606e+04	-922.49	0.01	0.0	174.4	-88.82	-76.69	4.24	0.81	-183.01	-
1.260e+04												
						348.8	-385.33	-536.28	4.24	0.81	556.47	-
6.606e+04												
27	325	-5808.47	199.55	0.02	-220.08	0.0	53.35	92.60	1.34	1.58	-268.66	-
1.259e+04												
		-1.868e+04	-268.66	2.38e-03	0.0	174.4	-11.94	-17.44	1.34	1.58	-34.56	-
6038.81												
						348.8	-77.23	-127.48	1.34	1.58	199.55	-
1.868e+04												
27	327	-9525.98	560.75	0.04	-652.08	0.0	160.38	279.93	3.73	4.05	-740.44	-
3.048e+04												
		-4.656e+04	-740.44	6.30e-03	0.0	174.4	-33.07	-46.11	3.73	4.05	-89.85	-
1.009e+04												
						348.8	-226.52	-372.15	3.73	4.05	560.75	-
4.656e+04												
27	331	-1.015e+04	620.95	0.04	-724.08	0.0	178.22	311.15	4.13	4.46	-819.07	-
3.346e+04												
		-5.121e+04	-819.07	6.96e-03	0.0	174.4	-36.59	-50.89	4.13	4.46	-99.06	-
1.076e+04												
						348.8	-251.40	-412.93	4.13	4.46	620.95	-
5.121e+04												
27	335	-5103.43	463.53	0.02	-220.08	0.0	39.21	95.29	3.00	3.20	-584.54	-
1.230e+04												
		-1.744e+04	-584.54	5.23e-03	0.0	174.4	-26.08	-14.75	3.00	3.20	-60.50	-
5274.96												
						348.8	-91.37	-124.78	3.00	3.20	463.53	-
1.744e+04												
27	339	-8820.94	824.73	0.04	-652.08	0.0	146.24	282.62	5.39	5.67	-1056.32	-
3.018e+04												
		-4.533e+04	-1056.32	9.15e-03	0.0	174.4	-47.21	-43.42	5.39	5.67	-115.79	-
9323.22												
						348.8	-240.66	-369.45	5.39	5.67	824.73	-
4.533e+04												
27	347	-9550.39	1111.49	0.04	-652.08	0.0	163.41	280.17	-2.20	5.15	-505.11	-

Viale Duca Alessandro n. 11 – 43123 Parma
Cell. 335 1403156 – E mail ing.concari@gmail.com
Sito web: studioaire.it – P.IVA 02561480340

3.054e+04												
		-4.654e+04	-564.97	-9.26e-03	13.66	174.4	-30.04	-45.87	4.63	5.15	-292.45	-
1.011e+04												
						348.8	-223.49	-371.90	11.46	5.15	1111.49	-
4.654e+04												
28	5	1.905e+05	1073.28	-0.14	-40.90	0.0	-509.36	2279.75	11.09	-366.42	-258.11	-
8.059e+04												
		-8.059e+04	-258.11	-0.08	0.0	60.0	-509.36	2259.30	11.09	-366.42	407.59	
5.558e+04												
						120.0	-509.36	2238.85	11.09	-366.42	1073.28	
1.905e+05												
28	67	3.899e+04	90.94	-0.03	-31.46	0.0	36.86	214.38	0.97	-72.33	-25.17	
1.515e+04												
		1.515e+04	-25.17	0.06	0.0	60.0	26.28	198.65	0.97	-72.33	32.88	
2.754e+04												
						120.0	15.71	182.92	0.97	-72.33	90.94	
3.899e+04												
28	101	1.977e+05	3270.29	-0.14	-40.90	0.0	-486.69	2377.49	-53.37	-373.57	3270.29	-
8.518e+04												
		-8.518e+04	-4402.83	-0.07	-21.15	60.0	-486.69	2357.04	-63.94	-373.57	-249.08	
5.686e+04												
						120.0	-486.69	2336.58	-74.52	-373.57	-4402.83	
1.977e+05												
28	103	2.038e+05	4445.48	-0.15	-40.90	0.0	-383.00	2375.77	-75.50	-381.37	4445.48	-
7.881e+04												
		-7.881e+04	-5883.65	-0.04	-21.15	60.0	-383.00	2355.31	-86.08	-381.37	-401.89	
6.312e+04												
						120.0	-383.00	2334.86	-96.65	-381.37	-5883.65	
2.038e+05												
28	143	1.638e+05	6718.67	-0.12	-40.90	0.0	-261.88	1917.72	-118.43	-300.97	6718.67	-
6.391e+04												
		-6.391e+04	-9607.58	-0.02	-35.24	60.0	-261.88	1897.27	-136.05	-300.97	-915.80	
5.054e+04												
						120.0	-261.88	1876.82	-153.67	-300.97	-9607.58	
1.638e+05												
28	147	4.897e+04	6518.96	-0.04	-31.46	0.0	9.49	573.49	-118.36	-82.29	6518.96	-
1.796e+04												
		-1.796e+04	-9798.88	0.02	-35.24	60.0	9.49	557.76	-135.98	-82.29	-1111.30	
1.598e+04												
						120.0	9.49	542.03	-153.60	-82.29	-9798.88	
4.897e+04												
28	155	1.181e+05	2.009e+04	-0.09	-31.46	0.0	-537.94	2603.28	-339.08	-238.62	2.009e+04	-
2.085e+05												
		-2.085e+05	-2.127e+04	-0.44	0.0	60.0	-537.94	2587.55	-339.08	-238.62	-591.87	-
4.471e+04												
						120.0	-537.94	2571.81	-339.08	-238.62	-2.127e+04	
1.181e+05												
28	161	8.408e+04	1.170e+04	-0.06	-31.46	0.0	278.16	59.43	172.92	-147.51	-9883.71	
8.408e+04												
		8.098e+04	-9883.71	0.79	0.0	60.0	278.16	43.70	172.92	-147.51	908.17	
8.300e+04												
						120.0	278.16	27.97	172.92	-147.51	1.170e+04	
8.098e+04												
28	164	1.065e+05	1.020e+04	-0.09	-31.46	0.0	-721.10	2158.69	-172.76	-212.56	1.020e+04	-
1.590e+05												
		-1.590e+05	-1.137e+04	-0.85	0.0	60.0	-721.10	2142.96	-172.76	-212.56	-586.06	-
2.575e+04												
						120.0	-721.10	2127.22	-172.76	-212.56	-1.137e+04	
1.065e+05												
28	182	5.279e+04	3.625e+04	-0.04	-31.46	0.0	-334.47	247.22	533.62	-78.19	-2.815e+04	
3.847e+04												
		3.847e+04	-2.815e+04	-0.05	0.0	60.0	-334.47	231.49	533.62	-78.19	4049.15	
4.610e+04												
						120.0	-334.47	215.76	533.62	-78.19	3.625e+04	
5.279e+04												
28	183	1.347e+05	2.847e+04	-0.10	-31.46	0.0	-108.47	1970.90	-533.45	-281.88	2.847e+04	-
1.134e+05												
		-1.134e+05	-3.592e+04	-0.04	0.0	60.0	-108.47	1955.17	-533.45	-281.88	-3727.04	
1.115e+04												
						120.0	-108.47	1939.44	-533.45	-281.88	-3.592e+04	
1.347e+05												
28	187	1.045e+05	9022.87	-0.08	-31.46	0.0	-360.17	1766.50	-150.79	-205.75	9022.87	-
1.126e+05												
		-1.126e+05	-9363.25	-0.21	0.0	60.0	-360.17	1750.77	-150.79	-205.75	-170.19	-
3589.27												
						120.0	-360.17	1735.04	-150.79	-205.75	-9363.25	
1.045e+05												
28	193	8.817e+04	5169.99	-0.06	-31.46	0.0	-1.85	649.95	74.96	-165.77	-4189.87	
1.577e+04												
		1.577e+04	-4189.87	0.33	0.0	60.0	-1.85	634.22	74.96	-165.77	490.06	
5.244e+04												
						120.0	-1.85	618.49	74.96	-165.77	5169.99	
8.817e+04												
28	196	9.934e+04	4502.13	-0.08	-31.46	0.0	-441.09	1568.17	-74.80	-194.31	4502.13	-
9.066e+04												
		-9.066e+04	-4838.04	-0.39	0.0	60.0	-441.09	1552.43	-74.80	-194.31	-167.95	
4809.23												
						120.0	-441.09	1536.70	-74.80	-194.31	-4838.04	
9.934e+04												
28	214	7.553e+04	1.655e+04	-0.06	-31.46	0.0	-271.83	722.47	243.06	-135.25	-1.278e+04	-
3402.91												
		-3402.91	-1.278e+04	-0.04	0.0	60.0	-271.83	706.73	243.06	-135.25	1887.74	

Viale Duca Alessandro n. 11 – 43123 Parma
Cell. 335 1403156 – E mail ing.concari@gmail.com
Sito web: studioaire.it – P.IVA 02561480340

3.654e+04												
						120.0	-271.83	691.00	243.06	-135.25	1.655e+04	
7.553e+04												
28	215	1.120e+05	1.309e+04	-0.08	-31.46	0.0	-171.11	1495.65	-242.90	-224.83	1.309e+04	-
7.149e+04												
		-7.149e+04	-1.622e+04	-0.03	0.0	60.0	-171.11	1479.92	-242.90	-224.83	-1565.64	
2.072e+04												
						120.0	-171.11	1464.19	-242.90	-224.83	-1.622e+04	
1.120e+05												
28	219	1.024e+05	7321.19	-0.08	-31.46	0.0	-333.17	1638.98	-121.83	-200.75	7321.19	-
9.803e+04												
		-9.803e+04	-7533.21	-0.17	0.0	60.0	-333.17	1623.25	-121.83	-200.75	-106.01	
2668.99												
						120.0	-333.17	1607.52	-121.83	-200.75	-7533.21	
1.024e+05												
28	225	8.926e+04	4186.56	-0.06	-31.46	0.0	-44.49	739.51	60.23	-168.54	-3334.08	
5401.72												
		5401.72	-3334.08	0.26	0.0	60.0	-44.49	723.78	60.23	-168.54	426.24	
4.780e+04												
						120.0	-44.49	708.04	60.23	-168.54	4186.56	
8.926e+04												
28	228	9.825e+04	3646.35	-0.08	-31.46	0.0	-398.45	1478.61	-60.07	-191.53	3646.35	-
8.029e+04												
		-8.029e+04	-3854.61	-0.32	0.0	60.0	-398.45	1462.88	-60.07	-191.53	-104.13	
9449.25												
						120.0	-398.45	1447.15	-60.07	-191.53	-3854.61	
9.825e+04												
28	246	7.906e+04	1.341e+04	-0.06	-31.46	0.0	-262.05	796.88	196.56	-143.96	-1.031e+04	-
9957.79												
		-9957.79	-1.031e+04	-0.04	0.0	60.0	-262.05	781.15	196.56	-143.96	1552.79	
3.502e+04												
						120.0	-262.05	765.42	196.56	-143.96	1.341e+04	
7.906e+04												
28	247	1.085e+05	1.062e+04	-0.08	-31.46	0.0	-180.89	1421.24	-196.40	-216.12	1.062e+04	-
6.493e+04												
		-6.493e+04	-1.308e+04	-0.03	0.0	60.0	-180.89	1405.51	-196.40	-216.12	-1230.68	
2.223e+04												
						120.0	-180.89	1389.77	-196.40	-216.12	-1.308e+04	
1.085e+05												
28	253	1.315e+05	724.64	-0.10	-31.46	0.0	-350.25	1574.70	7.42	-253.15	-165.31	-
5.553e+04												
		-5.553e+04	-165.31	-0.06	0.0	60.0	-350.25	1558.97	7.42	-253.15	279.66	
3.848e+04												
						120.0	-350.25	1543.23	7.42	-253.15	724.64	
1.315e+05												
28	279	3.732e+04	83.42	-0.03	-31.46	0.0	-2.14	280.08	0.69	-70.38	0.12	
5601.31												
		5601.31	0.12	0.03	0.0	60.0	-9.19	264.35	0.69	-70.38	41.77	
2.193e+04												
						120.0	-16.24	248.61	0.69	-70.38	83.42	
3.732e+04												
28	301	1.363e+05	2186.95	-0.10	-31.46	0.0	-335.14	1639.85	-35.56	-257.91	2186.95	-
5.859e+04												
		-5.859e+04	-2926.10	-0.05	-14.10	60.0	-335.14	1624.12	-42.61	-257.91	-158.11	
3.933e+04												
						120.0	-335.14	1608.39	-49.66	-257.91	-2926.10	
1.363e+05												
28	303	1.404e+05	2970.42	-0.10	-31.46	0.0	-266.01	1638.71	-50.32	-263.11	2970.42	-
5.434e+04												
		-5.434e+04	-3913.32	-0.03	-14.10	60.0	-266.01	1622.97	-57.36	-263.11	-259.99	
4.351e+04												
						120.0	-266.01	1607.24	-64.41	-263.11	-3913.32	
1.404e+05												
28	319	4.398e+04	4362.87	-0.03	-31.46	0.0	-20.38	519.48	-78.86	-77.02	4362.87	-
1.647e+04												
		-1.647e+04	-6509.79	0.01	-23.50	60.0	-20.38	503.75	-90.61	-77.02	-721.02	
1.422e+04												
						120.0	-20.38	488.02	-102.35	-77.02	-6509.79	
4.398e+04												
28	323	1.137e+05	4485.87	-0.08	-31.46	0.0	-185.27	1333.34	-78.93	-209.51	4485.87	-
4.441e+04												
		-4.441e+04	-6395.94	-0.01	-23.50	60.0	-185.27	1317.61	-90.68	-209.51	-602.59	
3.512e+04												
						120.0	-185.27	1301.88	-102.43	-209.51	-6395.94	
1.137e+05												
28	325	3.399e+04	68.39	-0.02	-31.46	0.0	-80.13	411.46	0.15	-66.48	50.70	-
1.350e+04												
		-1.350e+04	50.70	-0.01	0.0	60.0	-80.13	395.73	0.15	-66.48	59.54	
1.072e+04												
						120.0	-80.13	380.00	0.15	-66.48	68.39	
3.399e+04												
28	327	9.375e+04	165.98	-0.07	-31.46	0.0	-221.47	1109.06	0.08	-180.04	156.13	-
3.745e+04												
		-3.745e+04	156.13	-0.03	0.0	60.0	-221.47	1093.33	0.08	-180.04	161.05	
2.863e+04												
						120.0	-221.47	1077.60	0.08	-180.04	165.98	
9.375e+04												
28	331	1.037e+05	182.24	-0.08	-31.46	0.0	-245.02	1225.32	0.07	-198.97	173.70	-
4.144e+04												
		-4.144e+04	173.70	-0.03	0.0	60.0	-245.02	1209.59	0.07	-198.97	177.97	
3.161e+04												
						120.0	-245.02	1193.86	0.07	-198.97	182.24	

Viale Duca Alessandro n. 11 – 43123 Parma
Cell. 335 1403156 – E mail ing.concari@gmail.com
Sito web: studioaire.it – P.IVA 02561480340

1.037e+05												
28	335	3.570e+04	377.14	-0.03	-31.46	0.0	-51.33	410.98	-6.00	-68.64	377.14	-
1.173e+04												
		-1.173e+04	-342.95	-2.94e-04	0.0	60.0	-51.33	395.25	-6.00	-68.64	17.10	
1.245e+04												
						120.0	-51.33	379.52	-6.00	-68.64	-342.95	
3.570e+04												
28	337	9.204e+04	577.31	-0.07	-31.46	0.0	-250.27	1109.54	6.23	-177.87	-170.31	-
3.921e+04												
		-3.921e+04	-170.31	-0.04	0.0	60.0	-250.27	1093.81	6.23	-177.87	203.50	
2.689e+04												
						120.0	-250.27	1078.07	6.23	-177.87	577.31	
9.204e+04												
28	349	3.558e+04	834.79	-0.03	-31.46	0.0	-75.10	433.18	-14.18	-68.07	834.79	-
1.452e+04												
		-1.452e+04	-1148.52	-9.24e-03	-4.70	60.0	-75.10	417.45	-16.53	-68.07	-86.38	
1.100e+04												
						120.0	-75.10	401.72	-18.88	-68.07	-1148.52	
3.558e+04												
28	351	9.534e+04	940.22	-0.07	-31.46	0.0	-216.43	1130.78	-14.24	-181.63	940.22	-
3.846e+04												
		-3.846e+04	-1050.94	-0.03	-4.70	60.0	-216.43	1115.05	-16.59	-181.63	15.13	
2.891e+04												
						120.0	-216.43	1099.31	-18.94	-181.63	-1050.94	
9.534e+04												
29	7	7.927e+04	3558.83	-0.04	-40.90	0.0	-320.15	1290.91	44.25	-20.34	-1751.23	-
7.319e+04												
		-7.319e+04	-1751.23	-0.03	0.0	60.0	-320.15	1270.46	44.25	-20.34	903.80	
3653.18												
						120.0	-320.15	1250.01	44.25	-20.34	3558.83	
7.927e+04												
29	61	8.055e+04	326.86	-0.06	-40.90	0.0	974.68	681.84	15.30	-15.28	-1509.66	
1180.65												
		1180.65	-1509.66	-0.03	0.0	60.0	964.10	661.39	15.30	-15.28	-591.40	
4.148e+04												
						120.0	953.53	640.94	15.30	-15.28	326.86	
8.055e+04												
29	101	1.195e+05	610.90	-0.08	-40.90	0.0	546.45	1608.97	33.58	-15.52	-2149.82	-
7.109e+04												
		-7.109e+04	-2149.82	-0.06	-21.15	60.0	546.45	1588.52	23.01	-15.52	-452.26	
2.484e+04												
						120.0	546.45	1568.07	12.43	-15.52	610.90	
1.195e+05												
29	103	1.042e+05	2121.52	-0.06	-40.90	0.0	-394.43	1635.67	42.49	-15.94	-1708.00	-
8.966e+04												
		-8.966e+04	-1708.00	-0.05	-21.15	60.0	-394.43	1615.22	31.91	-15.94	523.96	
7871.08												
						120.0	-394.43	1594.77	21.34	-15.94	2121.52	
1.042e+05												
29	123	2.776e+04	513.45	-7.53e-03	-31.46	0.0	-834.86	608.66	12.54	-0.41	68.64	-
4.339e+04												
		-4.339e+04	68.64	-0.02	-21.15	60.0	-834.86	592.93	1.96	-0.41	503.68	-
7344.96												
						120.0	-834.86	577.20	-8.61	-0.41	304.33	
2.776e+04												
29	145	6.485e+04	-491.63	-0.05	-31.46	0.0	370.13	802.90	-0.51	3.09	-491.63	-
2.961e+04												
		-2.961e+04	-2668.04	-0.05	-35.24	60.0	370.13	787.17	-18.14	3.09	-1051.18	
1.809e+04												
						120.0	370.13	771.44	-35.76	3.09	-2668.04	
6.485e+04												
29	155	4.613e+04	1.353e+04	-0.07	-31.46	0.0	-314.10	2364.35	228.43	-14.50	-1.388e+04	-
2.213e+05												
		-2.213e+05	-1.388e+04	-0.08	0.0	60.0	-314.10	2348.62	228.43	-14.50	-170.57	-
8.711e+04												
						120.0	-314.10	2332.88	228.43	-14.50	1.353e+04	
4.613e+04												
29	162	1.451e+05	2.066e+04	0.03	-31.46	0.0	468.77	-1011.62	347.22	-32.25	-2.114e+04	
1.451e+05												
		5.482e+04	-2.114e+04	0.08	0.0	60.0	468.77	-1027.35	347.22	-32.25	-239.47	
1.004e+05												
						120.0	468.77	-1043.08	347.22	-32.25	2.066e+04	
5.482e+04												
29	181	1.632e+05	2336.63	-0.09	-31.46	0.0	-302.08	1793.09	182.14	10.80	-1.184e+04	-
6.514e+04												
		-6.514e+04	-1.184e+04	-0.11	0.0	60.0	-302.08	1777.36	182.14	10.80	-4750.05	
4.949e+04												
						120.0	-302.08	1761.63	182.14	10.80	2336.63	
1.632e+05												
29	182	9.053e+04	1.040e+04	0.05	-31.46	0.0	604.22	-1248.61	27.71	-40.24	-644.03	
9.053e+04												
		-5.379e+04	-644.03	0.11	0.0	60.0	604.22	-1264.34	27.71	-40.24	4879.48	
1.884e+04												
						120.0	604.22	-1280.07	27.71	-40.24	1.040e+04	-
5.379e+04												
29	183	1.384e+05	-1262.75	-0.11	-31.46	0.0	-461.45	2502.64	10.73	19.86	-1262.75	-
1.526e+05												
		-1.526e+05	-7696.70	-0.14	0.0	60.0	-461.45	2486.91	10.73	19.86	-4479.72	-
6659.84												
						120.0	-461.45	2471.18	10.73	19.86	-7696.70	
1.384e+05												
29	187	4.452e+04	6705.81	-0.05	-31.46	0.0	-103.07	1400.67	111.26	-11.97	-6643.33	-

Viale Duca Alessandro n. 11 – 43123 Parma
Cell. 335 1403156 – E mail ing.concari@gmail.com
Sito web: studioaire.it – P.IVA 02561480340

1.151e+05												
		-1.151e+05	-6643.33	-0.05	0.0	60.0	-103.07	1384.93	111.26	-11.97	31.24	-
3.483e+04												
						120.0	-103.07	1369.20	111.26	-11.97	6705.81	
4.452e+04												
29	194	4.748e+04	9933.24	-0.02	-31.46	0.0	250.68	-103.04	165.24	-20.04	-9960.12	
4.683e+04												
		4.683e+04	-9960.12	0.03	0.0	60.0	250.68	-118.78	165.24	-20.04	-13.44	
4.747e+04												
						120.0	250.68	-134.51	165.24	-20.04	9933.24	
4.717e+04												
29	213	9.740e+04	1734.65	-0.05	-31.46	0.0	-101.22	1173.69	92.59	-0.53	-5868.86	-
4.814e+04												
		-4.814e+04	-5868.86	-0.06	0.0	60.0	-101.22	1157.96	92.59	-0.53	-2067.11	
2.510e+04												
						120.0	-101.22	1142.23	92.59	-0.53	1734.65	
9.740e+04												
29	214	2.443e+04	5420.55	0.01	-31.46	0.0	315.05	-231.04	22.02	-23.84	-746.99	
2.443e+04												
		-1908.15	-746.99	0.04	0.0	60.0	315.05	-246.77	22.02	-23.84	2336.78	
1.173e+04												
						120.0	315.05	-262.50	22.02	-23.84	5420.55	-
1908.15												
29	215	8.650e+04	-1159.79	-0.06	-31.46	0.0	-172.28	1485.07	16.42	3.46	-1159.79	-
8.655e+04												
		-8.655e+04	-2714.26	-0.07	0.0	60.0	-172.28	1469.34	16.42	3.46	-1937.02	
448.21												
						120.0	-172.28	1453.61	16.42	3.46	-2714.26	
8.650e+04												
29	219	4.418e+04	5666.43	-0.04	-31.46	0.0	-70.15	1252.29	93.41	-11.60	-5540.69	-
9.889e+04												
		-9.889e+04	-5540.69	-0.04	0.0	60.0	-70.15	1236.56	93.41	-11.60	62.87	-
2.688e+04												
						120.0	-70.15	1220.83	93.41	-11.60	5666.43	
4.418e+04												
29	226	4.610e+04	8284.93	-0.02	-31.46	0.0	216.74	36.91	137.24	-18.16	-8236.66	
3.179e+04												
		3.179e+04	-8236.66	0.02	0.0	60.0	216.74	21.17	137.24	-18.16	24.13	
3.942e+04												
						120.0	216.74	5.44	137.24	-18.16	8284.93	
4.610e+04												
29	245	8.685e+04	1651.80	-0.05	-31.46	0.0	-68.34	1070.38	78.67	-2.37	-4937.70	-
4.501e+04												
		-4.501e+04	-4937.70	-0.05	0.0	60.0	-68.34	1054.64	78.67	-2.37	-1642.95	
2.139e+04												
						120.0	-68.34	1038.91	78.67	-2.37	1651.80	
8.685e+04												
29	246	1.383e+04	4647.02	3.11e-03	-31.46	0.0	268.57	-67.18	21.31	-21.23	-775.52	
1.383e+04												
		6519.89	-775.52	0.03	0.0	60.0	268.57	-82.91	21.31	-21.23	1935.75	
1.065e+04												
						120.0	268.57	-98.64	21.31	-21.23	4647.02	
6519.89												
29	247	7.807e+04	-1131.26	-0.06	-31.46	0.0	-125.80	1321.21	17.13	0.85	-1131.26	-
7.594e+04												
		-7.594e+04	-1940.73	-0.06	0.0	60.0	-125.80	1305.48	17.13	0.85	-1535.99	
1535.69												
						120.0	-125.80	1289.75	17.13	0.85	-1940.73	
7.807e+04												
29	255	5.493e+04	2436.92	-0.03	-31.46	0.0	-210.30	892.83	30.42	-14.15	-1213.19	-
5.032e+04												
		-5.032e+04	-1213.19	-0.02	0.0	60.0	-210.30	877.10	30.42	-14.15	611.87	
2778.89												
						120.0	-210.30	861.36	30.42	-14.15	2436.92	
5.493e+04												
29	281	5.579e+04	282.28	-0.04	-31.46	0.0	652.92	486.78	11.12	-10.78	-1052.15	-
739.73												
		-739.73	-1052.15	-0.02	0.0	60.0	645.87	471.05	11.12	-10.78	-384.93	
2.800e+04												
						120.0	638.82	455.32	11.12	-10.78	282.28	
5.579e+04												
29	301	8.178e+04	471.64	-0.06	-31.46	0.0	367.43	1104.87	23.30	-10.94	-1478.92	-
4.892e+04												
		-4.892e+04	-1478.92	-0.04	-14.10	60.0	367.43	1089.13	16.25	-10.94	-292.18	
1.690e+04												
						120.0	367.43	1073.40	9.21	-10.94	471.64	
8.178e+04												
29	303	7.154e+04	1478.72	-0.04	-31.46	0.0	-259.82	1122.67	29.24	-11.22	-1184.37	-
6.130e+04												
		-6.130e+04	-1184.37	-0.03	-14.10	60.0	-259.82	1106.94	22.19	-11.22	358.64	
5590.82												
						120.0	-259.82	1091.20	15.14	-11.22	1478.72	
7.154e+04												
29	307	2.373e+04	414.33	-8.35e-03	-31.46	0.0	-548.74	486.32	10.65	-1.76	-68.50	-
3.275e+04												
		-3.275e+04	-68.50	-0.02	-14.10	60.0	-548.74	470.59	3.60	-1.76	359.12	-
4038.04												
						120.0	-548.74	454.86	-3.45	-1.76	363.82	
2.373e+04												
29	317	4.845e+04	-432.90	-0.03	-31.46	0.0	254.58	615.82	1.95	0.57	-442.01	-
2.356e+04												
		-2.356e+04	-1617.76	-0.04	-23.50	60.0	254.58	600.08	-9.80	0.57	-677.45	

Viale Duca Alessandro n. 11 – 43123 Parma
Cell. 335 1403156 – E mail ing.concari@gmail.com
Sito web: studioaire.it – P.IVA 02561480340

1.292e+04												
						120.0	254.58	584.35	-21.55	0.57	-1617.76	
4.845e+04												
29	325	1.566e+04	482.79	-9.99e-03	-31.46	0.0	23.48	241.65	6.88	-4.46	-342.78	-
1.145e+04												
		-1.145e+04	-342.78	-5.44e-03	0.0	60.0	23.48	225.92	6.88	-4.46	70.00	
2575.78												
						120.0	23.48	210.19	6.88	-4.46	482.79	
1.566e+04												
29	327	4.230e+04	1353.15	-0.03	-31.46	0.0	71.39	627.02	19.22	-10.19	-953.39	-
3.106e+04												
		-3.106e+04	-953.39	-0.02	0.0	60.0	71.39	611.28	19.22	-10.19	199.88	
6090.92												
						120.0	71.39	595.55	19.22	-10.19	1353.15	
4.230e+04												
29	335	1.139e+04	902.41	-3.91e-03	-31.46	0.0	-237.87	249.07	9.35	-4.57	-220.05	-
1.661e+04												
		-1.661e+04	-220.05	-3.27e-03	0.0	60.0	-237.87	233.34	9.35	-4.57	341.18	-
2137.10												
						120.0	-237.87	217.60	9.35	-4.57	902.41	
1.139e+04												
29	337	4.656e+04	933.53	-0.03	-31.46	0.0	332.74	619.60	16.75	-10.07	-1076.12	-
2.590e+04												
		-2.590e+04	-1076.12	-0.02	0.0	60.0	332.74	603.87	16.75	-10.07	-71.29	
1.080e+04												
						120.0	332.74	588.13	16.75	-10.07	933.53	
4.656e+04												
29	339	3.803e+04	1772.76	-0.02	-31.46	0.0	-189.97	634.43	21.70	-10.31	-830.66	-
3.622e+04												
		-3.622e+04	-830.66	-0.01	0.0	60.0	-189.97	618.70	21.70	-10.31	471.05	
1378.04												
						120.0	-189.97	602.97	21.70	-10.31	1772.76	
3.803e+04												
29	351	4.783e+04	1033.74	-0.03	-31.46	0.0	54.88	703.63	18.83	-9.21	-943.78	-
3.472e+04												
		-3.472e+04	-943.78	-0.02	-4.70	60.0	54.88	687.90	16.48	-9.21	115.47	
7028.23												
						120.0	54.88	672.17	14.13	-9.21	1033.74	
4.783e+04												
30	65	4887.71	441.54	-2.80e-03	-2.62	0.0	-50.55	235.01	44.26	433.81	-1.07	
2550.73												
		2550.73	-1.07	1.37e-04	0.0	5.0	-51.43	233.70	44.26	433.81	220.24	
3722.49												
						10.0	-52.31	232.39	44.26	433.81	441.54	
4887.71												
30	83	3.067e+04	31.62	-5.74e-03	-2.62	0.0	165.56	143.47	-15.88	274.26	31.62	
2.924e+04												
		2.924e+04	-127.13	6.06e-03	0.0	5.0	164.09	142.16	-15.88	274.26	-47.76	
2.996e+04												
						10.0	162.62	140.85	-15.88	274.26	-127.13	
3.067e+04												
30	101	-8.594e+04	83.05	-0.01	-3.41	0.0	-538.06	2422.58	11.15	1626.51	-19.64	-
1.101e+05												
		-1.101e+05	-19.64	-7.48e-03	-1.76	5.0	-538.06	2420.88	10.27	1626.51	33.91	-
9.804e+04												
						10.0	-538.06	2419.17	9.39	1626.51	83.05	-
8.594e+04												
30	119	-5.839e+04	6.49	-0.01	-3.41	0.0	-294.64	1899.24	-52.26	1073.44	6.49	-
7.736e+04												
		-7.736e+04	-524.91	-2.51e-03	-1.76	5.0	-294.64	1897.54	-53.14	1073.44	-257.01	-
6.787e+04												
						10.0	-294.64	1895.83	-54.02	1073.44	-524.91	-
5.839e+04												
30	154	1.295e+05	769.05	-0.02	-2.62	0.0	699.01	-191.98	29.37	1348.11	181.36	
1.295e+05												
		1.281e+05	181.36	0.02	0.0	5.0	699.01	-193.29	29.37	1348.11	475.20	
1.288e+05												
						10.0	699.01	-194.60	29.37	1348.11	769.05	
1.281e+05												
30	155	-2.034e+05	-197.42	5.66e-03	-2.62	0.0	-1134.55	2472.10	-28.18	-67.91	-197.42	-
2.275e+05												
		-2.275e+05	-773.23	-0.03	0.0	5.0	-1134.55	2470.79	-28.18	-67.91	-485.33	-
2.155e+05												
						10.0	-1134.55	2469.48	-28.18	-67.91	-773.23	-
2.034e+05												
30	162	1.207e+05	1022.53	-0.02	-2.62	0.0	656.69	-58.33	47.91	1769.07	246.57	
1.205e+05												
		1.205e+05	246.57	0.04	0.0	5.0	656.69	-59.64	47.91	1769.07	634.55	
1.206e+05												
						10.0	656.69	-60.95	47.91	1769.07	1022.53	
1.207e+05												
30	163	-1.960e+05	-262.63	4.87e-03	-2.62	0.0	-1092.23	2338.45	-46.72	-488.87	-262.63	-
2.186e+05												
		-2.186e+05	-1026.72	-0.04	0.0	5.0	-1092.23	2337.14	-46.72	-488.87	-644.68	-
2.073e+05												
						10.0	-1092.23	2335.83	-46.72	-488.87	-1026.72	-
1.960e+05												
30	186	3.519e+04	338.36	-0.01	-2.62	0.0	185.30	550.99	13.13	941.94	75.77	
2.941e+04												
		2.941e+04	75.77	7.58e-03	0.0	5.0	185.30	549.68	13.13	941.94	207.07	
3.230e+04												
						10.0	185.30	548.36	13.13	941.94	338.36	

Viale Duca Alessandro n. 11 – 43123 Parma
Cell. 335 1403156 – E mail ing.concari@gmail.com
Sito web: studioaire.it – P.IVA 02561480340

3.519e+04												
30	187	-1.105e+05	-91.83	-8.84e-04	-2.62	0.0	-620.84	1729.13	-11.94	338.26	-91.83	-
1.275e+05												
		-1.275e+05	-342.55	-0.01	0.0	5.0	-620.84	1727.82	-11.94	338.26	-217.19	-
1.190e+05												
						10.0	-620.84	1726.51	-11.94	338.26	-342.55	-
1.105e+05												
30	194	3.193e+04	449.74	-0.01	-2.62	0.0	166.76	609.57	21.28	1126.40	104.38	
2.550e+04												
		2.550e+04	104.38	0.01	0.0	5.0	166.76	608.26	21.28	1126.40	277.06	
2.872e+04												
						10.0	166.76	606.95	21.28	1126.40	449.74	
3.193e+04												
30	195	-1.072e+05	-120.44	-1.23e-03	-2.62	0.0	-602.30	1670.55	-20.09	153.80	-120.44	-
1.236e+05												
		-1.236e+05	-453.93	-0.02	0.0	5.0	-602.30	1669.24	-20.09	153.80	-287.19	-
1.154e+05												
						10.0	-602.30	1667.93	-20.09	153.80	-453.93	-
1.072e+05												
30	218	2.104e+04	272.55	-0.01	-2.62	0.0	107.07	664.70	10.68	881.61	59.60	
1.418e+04												
		1.418e+04	59.60	5.57e-03	0.0	5.0	107.07	663.39	10.68	881.61	166.07	
1.761e+04												
						10.0	107.07	662.08	10.68	881.61	272.55	
2.104e+04												
30	219	-9.632e+04	-75.66	-1.88e-03	-2.62	0.0	-542.61	1615.42	-9.49	398.59	-75.66	-
1.122e+05												
		-1.122e+05	-276.73	-0.01	0.0	5.0	-542.61	1614.11	-9.49	398.59	-176.20	-
1.043e+05												
						10.0	-542.61	1612.80	-9.49	398.59	-276.73	-
9.632e+04												
30	226	1.842e+04	362.29	-9.92e-03	-2.62	0.0	92.14	711.88	17.24	1030.15	82.65	
1.103e+04												
		1.103e+04	82.65	0.01	0.0	5.0	92.14	710.57	17.24	1030.15	222.47	
1.473e+04												
						10.0	92.14	709.26	17.24	1030.15	362.29	
1.842e+04												
30	227	-9.370e+04	-98.71	-2.16e-03	-2.62	0.0	-527.68	1568.24	-16.05	250.05	-98.71	-
1.091e+05												
		-1.091e+05	-366.48	-0.02	0.0	5.0	-527.68	1566.93	-16.05	250.05	-232.60	-
1.014e+05												
						10.0	-527.68	1565.62	-16.05	250.05	-366.48	-
9.370e+04												
30	277	-1267.43	294.27	-2.60e-03	-2.62	0.0	-59.98	295.11	29.59	355.78	-1.66	-
4205.40												
		-4205.40	-1.66	-2.30e-04	0.0	5.0	-60.57	293.80	29.59	355.78	146.31	-
2733.14												
						10.0	-61.16	292.49	29.59	355.78	294.27	-
1267.43												
30	287	1.592e+04	20.13	-4.56e-03	-2.62	0.0	84.09	234.08	-10.50	249.41	20.13	
1.359e+04												
		1.359e+04	-84.84	3.72e-03	0.0	5.0	83.11	232.77	-10.50	249.41	-32.36	
1.476e+04												
						10.0	82.13	231.46	-10.50	249.41	-84.84	
1.592e+04												
30	301	-5.910e+04	55.33	-8.33e-03	-2.62	0.0	-369.22	1670.43	7.47	1110.97	-13.47	-
7.579e+04												
		-7.579e+04	-13.47	-5.12e-03	-1.17	5.0	-369.22	1669.12	6.88	1110.97	22.40	-
6.745e+04												
						10.0	-369.22	1667.81	6.29	1110.97	55.33	-
5.910e+04												
30	311	-4.073e+04	3.95	-7.61e-03	-2.62	0.0	-206.94	1321.54	-34.81	742.26	3.95	-
5.394e+04												
		-5.394e+04	-349.98	-1.80e-03	-1.17	5.0	-206.94	1320.23	-35.39	742.26	-171.54	-
4.733e+04												
						10.0	-206.94	1318.91	-35.98	742.26	-349.98	-
4.073e+04												
30	325	-1.358e+04	-0.27	-2.21e-03	-2.62	0.0	-78.84	415.31	0.26	199.72	-2.84	-
1.772e+04												
		-1.772e+04	-2.84	-9.63e-04	0.0	5.0	-78.84	413.99	0.26	199.72	-1.55	-
1.564e+04												
						10.0	-78.84	412.68	0.26	199.72	-0.27	-
1.358e+04												
30	327	-3.764e+04	-2.09	-6.04e-03	-2.62	0.0	-217.77	1140.06	0.59	640.10	-8.03	-
4.903e+04												
		-4.903e+04	-8.03	-2.70e-03	0.0	5.0	-217.77	1138.75	0.59	640.10	-5.06	-
4.333e+04												
						10.0	-217.77	1137.44	0.59	640.10	-2.09	-
3.764e+04												
30	331	-4.165e+04	-2.40	-6.68e-03	-2.62	0.0	-240.93	1260.85	0.65	713.50	-8.90	-
5.425e+04												
		-5.425e+04	-8.90	-2.99e-03	0.0	5.0	-240.93	1259.54	0.65	713.50	-5.65	-
4.794e+04												
						10.0	-240.93	1258.23	0.65	713.50	-2.40	-
4.165e+04												
30	333	-1.556e+04	126.68	-1.84e-03	-2.62	0.0	-107.85	411.09	13.42	246.13	-7.48	-
1.966e+04												
		-1.966e+04	-7.48	-1.73e-03	0.0	5.0	-107.85	409.78	13.42	246.13	59.60	-
1.760e+04												
						10.0	-107.85	408.47	13.42	246.13	126.68	-
1.556e+04												
30	335	-1.160e+04	1.79	-2.58e-03	-2.62	0.0	-49.84	419.52	-12.90	153.31	1.79	-

Viale Duca Alessandro n. 11 – 43123 Parma
Cell. 335 1403156 – E mail ing.concari@gmail.com
Sito web: studioaire.it – P.IVA 02561480340

1.578e+04												
		-1.578e+04	-127.21	-1.99e-04	0.0	5.0	-49.84	418.21	-12.90	153.31	-62.71	-
1.368e+04												
						10.0	-49.84	416.90	-12.90	153.31	-127.21	-
1.160e+04												
30	337	-3.962e+04	124.85	-5.67e-03	-2.62	0.0	-246.78	1135.85	13.75	686.51	-12.67	-
5.097e+04												
		-5.097e+04	-12.67	-3.47e-03	0.0	5.0	-246.78	1134.54	13.75	686.51	56.09	-
4.529e+04												
						10.0	-246.78	1133.22	13.75	686.51	124.85	-
3.962e+04												
30	339	-3.566e+04	-3.40	-6.42e-03	-2.62	0.0	-188.76	1144.27	-12.56	593.69	-3.40	-
4.709e+04												
		-4.709e+04	-129.04	-1.94e-03	0.0	5.0	-188.76	1142.96	-12.56	593.69	-66.22	-
4.137e+04												
						10.0	-188.76	1141.65	-12.56	593.69	-129.04	-
3.566e+04												
30	345	-8153.96	13.28	-2.59e-03	-2.62	0.0	-53.22	378.05	1.26	220.80	0.64	-
1.192e+04												
		-1.192e+04	0.64	-2.09e-04	0.0	5.0	-53.41	376.74	1.26	220.80	6.96	-
1.003e+04												
						10.0	-53.61	375.43	1.26	220.80	13.28	-
8153.96												
31	61	7.982e+04	340.82	1.39e-03	-3.41	0.0	903.13	-212.10	-17.30	21.18	340.82	
7.982e+04												
		7.768e+04	167.82	-2.91e-03	0.0	5.0	902.25	-213.80	-17.30	21.18	254.32	
7.876e+04												
						10.0	901.37	-215.50	-17.30	21.18	167.82	
7.768e+04												
31	67	2272.31	2288.97	1.40e-03	-2.62	0.0	-758.46	-249.11	-93.32	-13.99	2288.97	
2272.31												
		-231.93	1355.74	1.94e-03	0.0	5.0	-759.34	-250.42	-93.32	-13.99	1822.35	
1023.47												
						10.0	-760.22	-251.74	-93.32	-13.99	1355.74	-
231.93												
31	101	1.202e+05	2939.05	-2.38e-04	-3.41	0.0	545.20	-38.12	401.88	-33.10	-1070.96	
1.202e+05												
		1.198e+05	-1070.96	-5.20e-03	-1.76	5.0	545.20	-39.83	401.00	-33.10	936.25	
1.201e+05												
						10.0	545.20	-41.53	400.12	-33.10	2939.05	
1.198e+05												
31	123	2.792e+04	3214.42	5.82e-05	-2.62	0.0	-838.12	-113.60	365.52	-74.48	-431.95	
2.792e+04												
		2.677e+04	-431.95	-1.10e-03	-1.76	5.0	-838.12	-114.91	364.64	-74.48	1393.44	
2.734e+04												
						10.0	-838.12	-116.23	363.76	-74.48	3214.42	
2.677e+04												
31	143	1.014e+05	5037.35	-1.81e-04	-3.41	0.0	-483.97	-138.42	638.16	-93.38	-1329.58	
1.014e+05												
		1.000e+05	-1329.58	-4.52e-03	-2.94	5.0	-483.97	-140.13	636.69	-93.38	1857.55	
1.007e+05												
						10.0	-483.97	-141.83	635.22	-93.38	5037.35	
1.000e+05												
31	145	6.569e+04	2499.05	-9.68e-05	-2.62	0.0	367.72	-234.61	749.79	-104.78	-4984.19	
6.569e+04												
		6.334e+04	-4984.19	-6.85e-03	-2.94	5.0	367.72	-235.92	748.32	-104.78	-1238.90	
6.452e+04												
						10.0	367.72	-237.23	746.86	-104.78	2499.05	
6.334e+04												
31	181	1.416e+05	1.621e+04	-5.28e-04	-2.62	0.0	-290.42	-791.25	2085.26	-242.67	-9120.78	
1.416e+05												
		1.392e+05	-9120.78	-8.51e-03	0.0	5.0	-290.42	-792.57	2085.26	-242.67	3544.58	
1.404e+05												
						10.0	-290.42	-793.88	2085.26	-242.67	1.621e+04	
1.392e+05												
31	182	-7.499e+04	6882.95	-5.20e-04	-2.62	0.0	571.52	117.92	-1573.77	209.08	6882.95	-
8.035e+04												
		-8.035e+04	-7647.59	0.01	0.0	5.0	571.52	116.61	-1573.77	209.08	-382.32	-
7.766e+04												
						10.0	571.52	115.30	-1573.77	209.08	-7647.59	-
7.499e+04												
31	183	1.651e+05	9495.74	5.33e-04	-2.62	0.0	-428.84	-24.99	1507.55	-192.13	-4372.54	
1.651e+05												
		1.606e+05	-4372.54	-0.01	0.0	5.0	-428.84	-26.30	1507.55	-192.13	2561.60	
1.629e+05												
						10.0	-428.84	-27.62	1507.55	-192.13	9495.74	
1.606e+05												
31	184	-5.355e+04	1.163e+04	4.07e-04	-2.62	0.0	433.10	884.18	-2151.48	259.62	1.163e+04	-
5.685e+04												
		-5.685e+04	-1.436e+04	7.90e-03	0.0	5.0	433.10	882.87	-2151.48	259.62	-1365.30	-
5.520e+04												
						10.0	433.10	881.56	-2151.48	259.62	-1.436e+04	-
5.355e+04												
31	213	8.801e+04	7803.83	-3.02e-04	-2.62	0.0	-95.38	-324.47	930.59	-106.03	-3446.16	
8.801e+04												
		8.720e+04	-3446.16	-4.12e-03	0.0	5.0	-95.38	-325.78	930.59	-106.03	2178.84	
8.761e+04												
						10.0	-95.38	-327.09	930.59	-106.03	7803.83	
8.720e+04												
31	214	-1.096e+04	3858.65	-1.93e-04	-2.62	0.0	298.96	81.03	-735.41	100.77	3858.65	-
1.358e+04												
		-1.358e+04	-2966.23	5.63e-03	0.0	5.0	298.96	79.72	-735.41	100.77	446.21	-

Viale Duca Alessandro n. 11 – 43123 Parma
Cell. 335 1403156 – E mail ing.concari@gmail.com
Sito web: studioaire.it – P.IVA 02561480340

1.227e+04												
						10.0	298.96	78.41	-735.41	100.77	-2966.23	-
1.096e+04												
31	215	9.834e+04	4814.38	2.06e-04	-2.62	0.0	-156.28	11.89	669.18	-83.83	-1348.24	
9.834e+04												
		9.661e+04	-1348.24	-6.24e-03	0.0	5.0	-156.28	10.58	669.18	-83.83	1733.07	
9.748e+04												
						10.0	-156.28	9.27	669.18	-83.83	4814.38	
9.661e+04												
31	216	-1541.56	5956.57	2.14e-04	-2.62	0.0	238.06	417.39	-996.81	122.98	5956.57	-
3257.86												
		-3257.86	-5955.68	3.52e-03	0.0	5.0	238.06	416.08	-996.81	122.98	0.44	-
2396.44												
						10.0	238.06	414.77	-996.81	122.98	-5955.68	-
1541.56												
31	245	7.931e+04	6483.03	-2.61e-04	-2.62	0.0	-63.61	-252.59	746.74	-84.12	-2548.90	
7.931e+04												
		7.874e+04	-2548.90	-3.40e-03	0.0	5.0	-63.61	-253.90	746.74	-84.12	1967.07	
7.903e+04												
						10.0	-63.61	-255.22	746.74	-84.12	6483.03	
7.874e+04												
31	246	-672.27	3366.58	-1.52e-04	-2.62	0.0	255.38	74.55	-600.90	83.18	3366.58	-
2877.61												
		-2877.61	-2218.56	4.50e-03	0.0	5.0	255.38	73.24	-600.90	83.18	574.01	-
1771.66												
						10.0	255.38	71.92	-600.90	83.18	-2218.56	-
672.27												
31	247	8.763e+04	4066.71	1.64e-04	-2.62	0.0	-112.70	18.38	534.68	-66.23	-856.17	
8.763e+04												
		8.633e+04	-856.17	-5.11e-03	0.0	5.0	-112.70	17.07	534.68	-66.23	1605.27	
8.698e+04												
						10.0	-112.70	15.76	534.68	-66.23	4066.71	
8.633e+04												
31	248	6914.98	5059.31	1.77e-04	-2.62	0.0	206.29	345.52	-812.96	101.07	5059.31	
5444.23												
		5444.23	-4634.88	2.79e-03	0.0	5.0	206.29	344.21	-812.96	101.07	212.21	
6182.88												
						10.0	206.29	342.90	-812.96	101.07	-4634.88	
6914.98												
31	279	6745.88	1673.81	9.40e-04	-2.62	0.0	-497.81	-164.40	-66.05	-10.58	1673.81	
6745.88												
		5088.82	1013.29	1.26e-03	0.0	5.0	-498.39	-165.71	-66.05	-10.58	1343.55	
5920.63												
						10.0	-498.98	-167.02	-66.05	-10.58	1013.29	
5088.82												
31	281	5.531e+04	286.34	9.31e-04	-2.62	0.0	605.22	-140.72	-13.07	13.62	286.34	
5.531e+04												
		5.389e+04	155.67	-1.96e-03	0.0	5.0	604.63	-142.04	-13.07	13.62	221.01	
5.460e+04												
						10.0	604.04	-143.35	-13.07	13.62	155.67	
5.389e+04												
31	301	8.226e+04	2003.15	-1.62e-04	-2.62	0.0	366.60	-24.74	266.39	-22.57	-654.84	
8.226e+04												
		8.200e+04	-654.84	-3.48e-03	-1.17	5.0	366.60	-26.05	265.80	-22.57	675.62	
8.213e+04												
						10.0	366.60	-27.37	265.21	-22.57	2003.15	
8.200e+04												
31	307	2.384e+04	2252.41	4.46e-05	-2.62	0.0	-550.92	-74.06	239.84	-50.92	-140.14	
2.384e+04												
		2.309e+04	-140.14	-7.73e-04	-1.17	5.0	-550.92	-75.37	239.26	-50.92	1057.60	
2.347e+04												
						10.0	-550.92	-76.68	238.67	-50.92	2252.41	
2.309e+04												
31	317	4.903e+04	1775.49	-7.31e-05	-2.62	0.0	252.97	-154.73	496.03	-71.12	-3174.97	
4.903e+04												
		4.747e+04	-3174.97	-4.61e-03	-1.96	5.0	252.97	-156.04	495.05	-71.12	-697.29	
4.825e+04												
						10.0	252.97	-157.35	494.07	-71.12	1775.49	
4.747e+04												
31	323	6.970e+04	3402.02	-1.24e-04	-2.62	0.0	-319.52	-91.61	423.91	-62.76	-827.26	
6.970e+04												
		6.877e+04	-827.26	-3.03e-03	-1.96	5.0	-319.52	-92.92	422.93	-62.76	1289.83	
6.924e+04												
						10.0	-319.52	-94.23	421.95	-62.76	3402.02	
6.877e+04												
31	325	1.573e+04	443.48	-2.56e-05	-2.62	0.0	23.49	5.04	-11.51	-3.78	443.48	
1.569e+04												
		1.569e+04	328.39	-1.17e-04	0.0	5.0	23.49	3.73	-11.51	-3.78	385.93	
1.571e+04												
						10.0	23.49	2.42	-11.51	-3.78	328.39	
1.573e+04												
31	327	4.283e+04	1255.21	-8.83e-05	-2.62	0.0	71.34	46.46	-33.11	8.47	1255.21	
4.238e+04												
		4.238e+04	924.08	-3.03e-04	0.0	5.0	71.34	45.15	-33.11	8.47	1089.64	
4.261e+04												
						10.0	71.34	43.84	-33.11	8.47	924.08	
4.283e+04												
31	333	2.005e+04	-59.76	-3.44e-05	-2.62	0.0	285.29	-1.12	8.04	-1.31	-140.14	
2.005e+04												
		2.003e+04	-140.14	-8.65e-04	0.0	5.0	285.29	-2.43	8.04	-1.31	-99.95	
2.004e+04												
						10.0	285.29	-3.74	8.04	-1.31	-59.76	

Viale Duca Alessandro n. 11 – 43123 Parma
Cell. 335 1403156 – E mail ing.concari@gmail.com
Sito web: studioaire.it – P.IVA 02561480340

2.003e+04												
31	335	1.143e+04	1027.10	-1.68e-05	-2.62	0.0	-238.31	11.21	-31.06	-6.26	1027.10	
1.134e+04												
		1.134e+04	716.53	6.32e-04	0.0	5.0	-238.31	9.89	-31.06	-6.26	871.82	
1.139e+04												
						10.0	-238.31	8.58	-31.06	-6.26	716.53	
1.143e+04												
31	337	4.712e+04	671.59	-9.72e-05	-2.62	0.0	333.14	40.30	-13.57	10.95	671.59	
4.673e+04												
		4.673e+04	535.93	-1.05e-03	0.0	5.0	333.14	38.99	-13.57	10.95	603.76	
4.693e+04												
						10.0	333.14	37.68	-13.57	10.95	535.93	
4.712e+04												
31	339	3.853e+04	1838.83	-7.93e-05	-2.62	0.0	-190.46	52.63	-52.66	6.00	1838.83	
3.802e+04												
		3.802e+04	1312.22	4.46e-04	0.0	5.0	-190.46	51.31	-52.66	6.00	1575.52	
3.828e+04												
						10.0	-190.46	50.00	-52.66	6.00	1312.22	
3.853e+04												
31	351	4.814e+04	1306.65	-9.52e-05	-2.62	0.0	54.40	15.99	63.70	-5.59	671.59	
4.800e+04												
		4.800e+04	671.59	-1.02e-03	-0.39	5.0	54.40	14.68	63.51	-5.59	989.61	
4.807e+04												
						10.0	54.40	13.37	63.31	-5.59	1306.65	
4.814e+04												
32	45	-232.86	1542.01	-0.71	-515.24	0.0	-36.85	2422.33	-28.99	1092.47	1542.01	-
2.600e+05												
		-2.600e+05	-1936.98	-0.02	0.0	60.0	-36.85	2164.71	-28.99	1092.47	-197.48	-
1.224e+05												
						120.0	-36.85	1907.09	-28.99	1092.47	-1936.98	-
232.86												
32	81	-20.12	3514.75	-0.13	-64.03	0.0	-61.66	433.69	-57.50	199.40	3514.75	-
4.822e+04												
		-4.822e+04	-3384.92	0.07	0.0	60.0	-61.66	401.68	-57.50	199.40	64.92	-
2.316e+04												
						120.0	-61.66	369.66	-57.50	199.40	-3384.92	-
20.12												
32	83	-35.51	3827.29	-0.14	-64.03	0.0	-47.68	431.30	-60.02	219.50	3827.29	-
4.795e+04												
		-4.795e+04	-3374.75	0.10	0.0	60.0	-47.68	399.28	-60.02	219.50	226.27	-
2.303e+04												
						120.0	-47.68	367.27	-60.02	219.50	-3374.75	-
35.51												
32	143	-212.93	498.06	-0.58	-385.64	0.0	246.55	1859.08	-8.46	879.76	498.06	-
2.002e+05												
		-2.002e+05	-517.28	-0.08	0.0	60.0	246.55	1666.26	-8.46	879.76	-9.61	-
9.440e+04												
						120.0	246.55	1473.44	-8.46	879.76	-517.28	-
212.93												
32	161	-62.71	1.904e+04	-0.31	-236.83	0.0	-393.12	1334.27	-320.17	733.76	1.904e+04	-
1.461e+05												
		-1.461e+05	-1.962e+04	0.24	0.0	60.0	-393.12	1215.85	-320.17	733.76	-291.36	-
6.951e+04												
						120.0	-393.12	1097.44	-320.17	733.76	-1.962e+04	-
62.71												
32	162	-28.74	1.372e+04	-0.23	-236.83	0.0	-744.85	1551.89	-240.36	602.90	1.372e+04	-
1.722e+05												
		-1.722e+05	-1.517e+04	0.46	0.0	60.0	-744.85	1433.48	-240.36	602.90	-722.73	-
8.256e+04												
						120.0	-744.85	1315.06	-240.36	602.90	-1.517e+04	-
28.74												
32	164	-180.91	1.972e+04	-0.40	-236.83	0.0	396.34	1016.28	325.64	331.27	-1.959e+04	-
1.078e+05												
		-1.078e+05	-1.959e+04	-0.30	0.0	60.0	396.34	897.86	325.64	331.27	66.31	-
5.045e+04												
						120.0	396.34	779.45	325.64	331.27	1.972e+04	-
180.91												
32	182	-49.52	1360.04	-0.19	-236.83	0.0	-902.17	1700.83	-31.05	330.66	1360.04	-
1.901e+05												
		-1.901e+05	-8479.13	0.13	0.0	60.0	-902.17	1582.41	-31.05	330.66	-3559.55	-
9.150e+04												
						120.0	-902.17	1464.00	-31.05	330.66	-8479.13	-
49.52												
32	183	-194.10	8582.21	-0.52	-236.83	0.0	905.39	649.72	36.51	734.37	-1913.21	-
6.383e+04												
		-6.383e+04	-1913.21	-0.19	0.0	60.0	905.39	531.30	36.51	734.37	3334.50	-
2.846e+04												
						120.0	905.39	412.89	36.51	734.37	8582.21	-
194.10												
32	194	-80.95	5854.70	-0.30	-236.83	0.0	-327.39	1340.93	-103.91	563.35	5854.70	-
1.468e+05												
		-1.468e+05	-6629.89	0.19	0.0	60.0	-327.39	1222.52	-103.91	563.35	-387.59	-
6.991e+04												
						120.0	-327.39	1104.10	-103.91	563.35	-6629.89	-
80.95												
32	196	-147.75	8701.03	-0.37	-236.83	0.0	174.10	1105.81	144.85	444.14	-8786.28	-
1.186e+05												
		-1.186e+05	-8786.28	-0.15	0.0	60.0	174.10	987.40	144.85	444.14	-42.62	-
5.582e+04												
						120.0	174.10	868.98	144.85	444.14	8701.03	-
147.75												
32	214	-90.06	380.93	-0.28	-236.83	0.0	-403.78	1408.36	-11.28	443.42	380.93	-

Viale Duca Alessandro n. 11 – 43123 Parma
Cell. 335 1403156 – E mail ing.concari@gmail.com
Sito web: studioaire.it – P.IVA 02561480340

1.549e+05												
		-1.549e+05	-3758.56	0.04	0.0	60.0	-403.78	1289.95	-11.28	443.42	-1688.81	-
7.396e+04												
						120.0	-403.78	1171.53	-11.28	443.42	-3758.56	-
90.06												
32	215	-153.55	3861.64	-0.42	-236.83	0.0	407.01	942.18	16.74	621.61	-934.11	-
9.895e+04												
		-9.895e+04	-934.11	-0.10	0.0	60.0	407.01	823.77	16.74	621.61	1463.76	-
4.600e+04												
						120.0	407.01	705.35	16.74	621.61	3861.64	-
153.55												
32	226	-88.89	4660.44	-0.31	-236.83	0.0	-263.68	1308.79	-83.17	557.35	4660.44	-
1.430e+05												
		-1.430e+05	-5331.35	0.14	0.0	60.0	-263.68	1190.38	-83.17	557.35	-335.46	-
6.799e+04												
						120.0	-263.68	1071.96	-83.17	557.35	-5331.35	-
88.89												
32	228	-142.71	7022.53	-0.37	-236.83	0.0	140.42	1119.38	117.29	461.32	-7138.16	-
1.202e+05												
		-1.202e+05	-7138.16	-0.13	0.0	60.0	140.42	1000.96	117.29	461.32	-57.82	-
5.663e+04												
						120.0	140.42	882.55	117.29	461.32	7022.53	-
142.71												
32	246	-96.23	243.11	-0.30	-236.83	0.0	-325.57	1363.22	-8.40	460.71	243.11	-
1.495e+05												
		-1.495e+05	-3028.36	0.03	0.0	60.0	-325.57	1244.80	-8.40	460.71	-1392.62	-
7.125e+04												
						120.0	-325.57	1126.39	-8.40	460.71	-3028.36	-
96.23												
32	247	-147.38	3131.44	-0.41	-236.83	0.0	328.79	987.33	13.87	604.32	-796.29	-
1.044e+05												
		-1.044e+05	-796.29	-0.09	0.0	60.0	328.79	868.91	13.87	604.32	1167.58	-
4.871e+04												
						120.0	328.79	750.50	13.87	604.32	3131.44	-
147.38												
32	273	-161.21	1014.15	-0.49	-352.03	0.0	-24.49	1672.41	-19.19	754.57	1014.15	-
1.797e+05												
		-1.797e+05	-1288.89	-0.01	0.0	60.0	-24.49	1496.39	-19.19	754.57	-137.37	-
8.466e+04												
						120.0	-24.49	1320.38	-19.19	754.57	-1288.89	-
161.21												
32	285	-28.35	2308.51	-0.13	-64.03	0.0	-40.90	432.93	-37.99	198.57	2308.51	-
4.814e+04												
		-4.814e+04	-2250.53	0.04	0.0	60.0	-40.90	400.92	-37.99	198.57	28.99	-
2.312e+04												
						120.0	-40.90	368.90	-37.99	198.57	-2250.53	-
28.35												
32	287	-38.61	2516.87	-0.14	-64.03	0.0	-31.58	431.34	-39.67	211.97	2516.87	-
4.796e+04												
		-4.796e+04	-2243.75	0.06	0.0	60.0	-31.58	399.32	-39.67	211.97	136.56	-
2.304e+04												
						120.0	-31.58	367.31	-39.67	211.97	-2243.75	-
38.61												
32	323	-147.93	318.18	-0.40	-265.63	0.0	164.45	1296.91	-5.51	612.76	318.18	-
1.398e+05												
		-1.398e+05	-342.42	-0.05	0.0	60.0	164.45	1164.09	-5.51	612.76	-12.12	-
6.601e+04												
						120.0	164.45	1031.28	-5.51	612.76	-342.42	-
147.93												
32	325	-44.81	18.25	-0.14	-64.03	0.0	0.61	431.42	1.02	196.91	-103.97	-
4.797e+04												
		-4.797e+04	-103.97	-0.01	0.0	60.0	0.61	399.40	1.02	196.91	-42.86	-
2.305e+04												
						120.0	0.61	367.39	1.02	196.91	18.25	-
44.81												
32	327	-121.81	51.54	-0.35	-236.83	0.0	1.61	1175.27	2.73	532.52	-276.59	-
1.269e+05												
		-1.269e+05	-276.59	-0.03	0.0	60.0	1.61	1056.86	2.73	532.52	-112.52	-
5.998e+04												
						120.0	1.61	938.44	2.73	532.52	51.54	-
121.81												
32	331	-134.64	57.09	-0.39	-265.63	0.0	1.78	1299.25	3.02	588.45	-305.36	-
1.401e+05												
		-1.401e+05	-305.36	-0.03	0.0	60.0	1.78	1166.44	3.02	588.45	-124.14	-
6.614e+04												
						120.0	1.78	1033.62	3.02	588.45	57.09	-
134.64												
32	333	-40.53	15.43	-0.13	-64.03	0.0	-3.28	432.08	1.72	191.33	-190.78	-
4.805e+04												
		-4.805e+04	-190.78	-0.02	0.0	60.0	-3.28	400.07	1.72	191.33	-87.68	-
2.308e+04												
						120.0	-3.28	368.05	1.72	191.33	15.43	-
40.53												
32	345	-42.54	399.36	-0.14	-64.03	0.0	-6.76	431.56	-6.95	198.58	399.36	-
4.799e+04												
		-4.799e+04	-434.83	2.36e-03	0.0	60.0	-6.76	399.54	-6.95	198.58	-17.73	-
2.305e+04												
						120.0	-6.76	367.53	-6.95	198.58	-434.83	-
42.54												
32	351	-123.44	-29.04	-0.36	-236.83	0.0	33.21	1174.97	1.20	536.04	-172.72	-
1.269e+05												
		-1.269e+05	-172.72	-0.04	0.0	60.0	33.21	1056.55	1.20	536.04	-100.88	-

Viale Duca Alessandro n. 11 – 43123 Parma
Cell. 335 1403156 – E mail ing.concari@gmail.com
Sito web: studioaire.it – P.IVA 02561480340

5.996e+04												
						120.0	33.21	938.13	1.20	536.04	-29.04	-
123.44												
33	45	1.059e+05	2271.14	1.13	77.00	0.0	36.76	837.00	-36.70	-1016.41	2271.14	
823.52												
		823.52	-2133.22	0.04	0.0	60.0	26.19	875.50	-36.70	-1016.41	68.96	
5.220e+04												
						120.0	15.61	914.00	-36.70	-1016.41	-2133.22	
1.059e+05												
33	77	8.195e+04	3633.74	0.87	77.00	0.0	56.32	639.31	-59.85	-780.46	3633.74	
617.07												
		617.07	-3548.25	6.78e-03	0.0	60.0	38.70	677.81	-59.85	-780.46	42.75	
4.013e+04												
						120.0	21.07	716.31	-59.85	-780.46	-3548.25	
8.195e+04												
33	81	2.008e+04	3644.26	0.19	59.23	0.0	54.62	136.72	-61.03	-176.14	3644.26	
118.21												
		118.21	-3679.04	-0.03	0.0	60.0	37.00	166.33	-61.03	-176.14	-17.39	
9209.75												
						120.0	19.38	195.95	-61.03	-176.14	-3679.04	
2.008e+04												
33	143	8.149e+04	9025.59	0.92	77.00	0.0	-100.41	634.98	108.32	-815.66	-6087.60	
675.83												
		675.83	-6087.60	0.02	35.24	60.0	-100.41	673.48	125.94	-815.66	940.33	
3.993e+04												
						120.0	-100.41	711.98	143.57	-815.66	9025.59	
8.149e+04												
33	147	1.962e+04	8894.79	0.25	59.23	0.0	-102.11	132.39	107.14	-211.34	-6077.08	
176.97												
		176.97	-6077.08	-0.02	35.24	60.0	-102.11	162.01	124.77	-211.34	880.19	
9009.05												
						120.0	-102.11	191.62	142.39	-211.34	8894.79	
1.962e+04												
33	166	7.981e+04	2.631e+04	0.32	59.23	0.0	435.41	630.09	-483.78	-270.69	2.631e+04	
148.51												
		148.51	-3.198e+04	-0.62	0.0	60.0	435.41	659.70	-483.78	-270.69	-2835.98	
3.909e+04												
						120.0	435.41	689.32	-483.78	-270.69	-3.198e+04	
7.981e+04												
33	167	2.389e+04	3.220e+04	0.80	59.23	0.0	-432.65	167.99	485.72	-725.53	-2.633e+04	
673.32												
		673.32	-2.633e+04	0.68	0.0	60.0	-432.65	197.61	485.72	-725.53	2935.71	
1.139e+04												
						120.0	-432.65	227.22	485.72	-725.53	3.220e+04	
2.389e+04												
33	182	8.858e+04	2.544e+04	0.25	59.23	0.0	426.31	703.11	-483.81	-208.33	2.544e+04	
147.89												
		147.89	-3.269e+04	0.04	0.0	60.0	426.31	732.73	-483.81	-208.33	-3624.94	
4.348e+04												
						120.0	426.31	762.34	-483.81	-208.33	-3.269e+04	
8.858e+04												
33	183	1.512e+04	3.291e+04	0.86	59.23	0.0	-423.54	94.97	485.75	-787.88	-2.546e+04	
673.94												
		673.94	-2.546e+04	0.04	0.0	60.0	-423.54	124.59	485.75	-787.88	3724.66	
7006.53												
						120.0	-423.54	154.20	485.75	-787.88	3.291e+04	
1.512e+04												
33	198	6.418e+04	1.162e+04	0.45	59.23	0.0	192.84	500.92	-213.25	-398.11	1.162e+04	
295.68												
		295.68	-1.407e+04	-0.25	0.0	60.0	192.84	530.54	-213.25	-398.11	-1226.56	
3.135e+04												
						120.0	192.84	560.16	-213.25	-398.11	-1.407e+04	
6.418e+04												
33	199	3.952e+04	1.429e+04	0.66	59.23	0.0	-190.07	297.16	215.19	-598.10	-1.164e+04	
526.15												
		526.15	-1.164e+04	0.31	0.0	60.0	-190.07	326.77	215.19	-598.10	1326.28	
1.914e+04												
						120.0	-190.07	356.39	215.19	-598.10	1.429e+04	
3.952e+04												
33	214	6.816e+04	1.137e+04	0.42	59.23	0.0	190.63	534.03	-215.80	-370.32	1.137e+04	
295.24												
		295.24	-1.456e+04	0.04	0.0	60.0	190.63	563.64	-215.80	-370.32	-1591.98	
3.334e+04												
						120.0	190.63	593.26	-215.80	-370.32	-1.456e+04	
6.816e+04												
33	215	3.554e+04	1.477e+04	0.69	59.23	0.0	-187.86	264.05	217.74	-625.90	-1.139e+04	
526.59												
		526.59	-1.139e+04	0.03	0.0	60.0	-187.86	293.67	217.74	-625.90	1691.71	
1.715e+04												
						120.0	-187.86	323.28	217.74	-625.90	1.477e+04	
3.554e+04												
33	230	6.179e+04	9367.17	0.47	59.23	0.0	155.69	481.15	-171.73	-417.54	9367.17	
318.08												
		318.08	-1.133e+04	-0.20	0.0	60.0	155.69	510.77	-171.73	-417.54	-979.15	
3.016e+04												
						120.0	155.69	540.38	-171.73	-417.54	-1.133e+04	
6.179e+04												
33	231	4.191e+04	1.154e+04	0.64	59.23	0.0	-152.92	316.93	173.67	-578.67	-9383.91	
503.75												
		503.75	-9383.91	0.26	0.0	60.0	-152.92	346.54	173.67	-578.67	1078.88	
2.032e+04												
						120.0	-152.92	376.16	173.67	-578.67	1.154e+04	

Viale Duca Alessandro n. 11 – 43123 Parma
Cell. 335 1403156 – E mail ing.concari@gmail.com
Sito web: studioaire.it – P.IVA 02561480340

4.191e+04												
33	246	6.500e+04	9175.71	0.45	59.23	0.0	154.00	507.89	-173.93	-395.13	9175.71	
317.72												
		317.72	-1.172e+04	0.04	0.0	60.0	154.00	537.51	-173.93	-395.13	-1274.59	
3.177e+04												
						120.0	154.00	567.12	-173.93	-395.13	-1.172e+04	
6.500e+04												
33	247	3.870e+04	1.194e+04	0.66	59.23	0.0	-151.23	290.19	175.87	-601.09	-9192.45	
504.11												
		504.11	-9192.45	0.03	0.0	60.0	-151.23	319.80	175.87	-601.09	1374.31	
1.871e+04												
						120.0	-151.23	349.42	175.87	-601.09	1.194e+04	
3.870e+04												
33	273	7.324e+04	1513.72	0.78	59.23	0.0	24.57	576.00	-24.42	-702.20	1513.72	
569.27												
		569.27	-1416.78	0.03	0.0	60.0	17.52	605.61	-24.42	-702.20	48.47	
3.602e+04												
						120.0	10.48	635.23	-24.42	-702.20	-1416.78	
7.324e+04												
33	285	2.002e+04	2428.56	0.19	59.23	0.0	36.58	136.14	-40.57	-178.89	2428.56	
129.44												
		129.44	-2439.28	-0.02	0.0	60.0	24.83	165.76	-40.57	-178.89	-5.36	
9186.36												
						120.0	13.08	195.37	-40.57	-178.89	-2439.28	
2.002e+04												
33	289	5.729e+04	2422.11	0.60	59.23	0.0	37.61	444.20	-39.85	-544.89	2422.11	
431.63												
		431.63	-2360.13	5.75e-03	0.0	60.0	25.86	473.82	-39.85	-544.89	30.99	
2.797e+04												
						120.0	14.12	503.43	-39.85	-544.89	-2360.13	
5.729e+04												
33	319	1.971e+04	5943.28	0.23	59.23	0.0	-67.91	133.26	71.55	-202.36	-4052.34	
168.61												
		168.61	-4052.34	-0.01	23.50	60.0	-67.91	162.87	83.30	-202.36	593.03	
9052.56												
						120.0	-67.91	192.49	95.04	-202.36	5943.28	
1.971e+04												
33	323	5.698e+04	6022.42	0.64	59.23	0.0	-66.87	441.32	72.26	-568.36	-4058.78	
470.80												
		470.80	-4058.78	0.01	23.50	60.0	-66.87	470.94	84.01	-568.36	629.38	
2.784e+04												
						120.0	-66.87	500.55	95.76	-568.36	6022.42	
5.698e+04												
33	325	1.990e+04	40.25	0.21	59.23	0.0	0.50	134.99	0.36	-184.40	-2.84	
151.89												
		151.89	-2.84	0.01	0.0	60.0	0.50	164.60	0.36	-184.40	18.70	
9139.58												
						120.0	0.50	194.22	0.36	-184.40	40.25	
1.990e+04												
33	327	5.185e+04	108.09	0.56	59.23	0.0	1.38	399.04	0.97	-498.11	-8.37	
410.92												
		410.92	-8.37	0.03	0.0	60.0	1.38	428.66	0.97	-498.11	49.86	
2.524e+04												
						120.0	1.38	458.27	0.97	-498.11	108.09	
5.185e+04												
33	331	5.717e+04	119.40	0.61	59.23	0.0	1.53	443.05	1.07	-550.39	-9.29	
454.09												
		454.09	-9.29	0.03	0.0	60.0	1.53	472.66	1.07	-550.39	55.06	
2.793e+04												
						120.0	1.53	502.28	1.07	-550.39	119.40	
5.717e+04												
33	345	1.991e+04	449.97	0.20	59.23	0.0	7.24	135.10	-7.20	-184.17	449.97	
147.83												
		147.83	-414.47	2.59e-03	0.0	60.0	4.89	164.72	-7.20	-184.17	17.75	
9142.48												
						120.0	2.54	194.33	-7.20	-184.17	-414.47	
1.991e+04												
33	347	5.186e+04	444.45	0.56	59.23	0.0	8.12	399.16	-6.59	-497.89	444.45	
406.85												
		406.85	-346.62	0.02	0.0	60.0	5.77	428.77	-6.59	-497.89	48.91	
2.524e+04												
						120.0	3.42	458.39	-6.59	-497.89	-346.62	
5.186e+04												
33	349	1.988e+04	1179.66	0.21	59.23	0.0	-12.71	134.76	13.97	-187.11	-779.28	
154.81												
		154.81	-779.28	9.31e-03	4.70	60.0	-12.71	164.37	16.32	-187.11	129.70	
9128.63												
						120.0	-12.71	193.99	18.67	-187.11	1179.66	
1.988e+04												
33	351	5.182e+04	1247.51	0.56	59.23	0.0	-11.82	398.81	14.59	-500.82	-784.80	
413.83												
		413.83	-784.80	0.03	4.70	60.0	-11.82	428.42	16.94	-500.82	160.86	
2.523e+04												
						120.0	-11.82	458.04	19.29	-500.82	1247.51	
5.182e+04												
34	45	1016.41	2271.14	-0.28	546.44	0.0	36.70	290.56	57.91	823.52	-3408.94	-
6.664e+04												
		-6.664e+04	-3408.94	0.02	-21.15	60.0	36.70	563.78	47.33	823.52	-251.70	-
4.101e+04												
						120.0	36.70	837.00	36.76	823.52	2271.14	
1016.41												
34	81	176.14	3644.26	-0.04	88.03	0.0	61.03	48.69	89.87	118.21	-5025.03	-

Viale Duca Alessandro n. 11 – 43123 Parma
Cell. 335 1403156 – E mail ing.concari@gmail.com
Sito web: studioaire.it – P.IVA 02561480340

1.095e+04												
		-1.095e+04	-5025.03	-0.07	-35.24	60.0	61.03	92.70	72.24	118.21	-161.73	-
6706.47												
						120.0	61.03	136.72	54.62	118.21	3644.26	
176.14												
34	103	1042.80	3453.84	-0.29	546.44	0.0	-46.79	287.28	-60.14	861.35	3453.84	-
6.622e+04												
		-6.622e+04	-3762.44	0.08	0.0	60.0	-57.36	560.50	-60.14	861.35	-154.30	-
4.078e+04												
						120.0	-67.93	833.72	-60.14	861.35	-3762.44	
1042.80												
34	143	815.66	5961.86	-0.23	416.84	0.0	-73.08	218.14	-100.41	675.83	5961.86	-
5.037e+04												
		-5.037e+04	-6087.60	0.08	0.0	60.0	-90.70	426.56	-100.41	675.83	-62.87	-
3.103e+04												
						120.0	-108.32	634.98	-100.41	675.83	-6087.60	
815.66												
34	147	211.34	6175.92	-0.05	88.03	0.0	-71.90	44.36	-102.11	176.97	6175.92	-
1.039e+04												
		-1.039e+04	-6077.08	0.04	0.0	60.0	-89.52	88.38	-102.11	176.97	49.42	-
6411.81												
						120.0	-107.14	132.39	-102.11	176.97	-6077.08	
211.34												
34	162	280.82	2.557e+04	-0.06	260.83	0.0	478.49	365.25	469.09	156.61	-3.089e+04	-
5.877e+04												
		-5.877e+04	-3.089e+04	-0.46	0.0	60.0	478.49	495.66	469.09	156.61	-2659.65	-
3.316e+04												
						120.0	478.49	626.08	469.09	156.61	2.557e+04	
280.82												
34	163	715.40	3.054e+04	-0.21	260.83	0.0	-480.43	-88.83	-466.32	665.22	3.054e+04	-
4704.25												
		-6372.88	-2.559e+04	0.52	0.0	60.0	-480.43	41.59	-466.32	665.22	2477.01	-
5906.89												
						120.0	-480.43	172.00	-466.32	665.22	-2.559e+04	
715.40												
34	182	208.33	2.544e+04	-0.02	260.83	0.0	387.86	458.04	435.01	147.89	-2.690e+04	-
6.984e+04												
		-6.984e+04	-2.690e+04	-0.13	0.0	60.0	387.86	588.45	435.01	147.89	-730.24	-
3.873e+04												
						120.0	387.86	718.87	435.01	147.89	2.544e+04	
208.33												
34	183	6362.00	2.656e+04	-0.25	260.83	0.0	-389.80	-181.62	-432.24	673.94	2.656e+04	
6362.00												
		-832.48	-2.546e+04	0.19	0.0	60.0	-389.80	-51.20	-432.24	673.94	547.60	-
337.52												
						120.0	-389.80	79.21	-432.24	673.94	-2.546e+04	
787.88												
34	194	402.69	1.124e+04	-0.10	260.83	0.0	209.68	238.14	206.93	299.31	-1.367e+04	-
4.364e+04												
		-4.364e+04	-1.367e+04	-0.19	0.0	60.0	209.68	368.56	206.93	299.31	-1212.27	-
2.553e+04												
						120.0	209.68	498.97	206.93	299.31	1.124e+04	
402.69												
34	195	593.53	1.332e+04	-0.17	260.83	0.0	-211.62	38.28	-204.16	522.52	1.332e+04	-
1.984e+04												
		-1.984e+04	-1.126e+04	0.25	0.0	60.0	-211.62	168.69	-204.16	522.52	1029.63	-
1.353e+04												
						120.0	-211.62	299.11	-204.16	522.52	-1.126e+04	
593.53												
34	198	398.11	1.162e+04	-0.10	260.83	0.0	205.63	245.29	210.20	295.68	-1.367e+04	-
4.449e+04												
		-4.449e+04	-1.367e+04	-0.14	0.0	60.0	205.63	375.70	210.20	295.68	-1024.34	-
2.596e+04												
						120.0	205.63	506.12	210.20	295.68	1.162e+04	
398.11												
34	199	598.10	1.332e+04	-0.17	260.83	0.0	-207.57	31.13	-207.44	526.15	1.332e+04	-
1.899e+04												
		-1.899e+04	-1.164e+04	0.21	0.0	60.0	-207.57	161.55	-207.44	526.15	841.70	-
1.311e+04												
						120.0	-207.57	291.96	-207.44	526.15	-1.164e+04	
598.10												
34	214	370.32	1.137e+04	-0.08	260.83	0.0	171.10	280.25	194.58	295.24	-1.204e+04	-
4.866e+04												
		-4.866e+04	-1.204e+04	-0.04	0.0	60.0	171.10	410.67	194.58	295.24	-335.33	-
2.806e+04												
						120.0	171.10	541.08	194.58	295.24	1.137e+04	
370.32												
34	215	625.90	1.170e+04	-0.18	260.83	0.0	-173.04	-3.83	-191.81	526.59	1.170e+04	-
1.482e+04												
		-1.482e+04	-1.139e+04	0.10	0.0	60.0	-173.04	126.58	-191.81	526.59	152.68	-
1.101e+04												
						120.0	-173.04	257.00	-191.81	526.59	-1.139e+04	
625.90												
34	226	421.23	9058.71	-0.11	260.83	0.0	168.76	218.76	167.01	321.01	-1.104e+04	-
4.133e+04												
		-4.133e+04	-1.104e+04	-0.14	0.0	60.0	168.76	349.18	167.01	321.01	-993.13	-
2.437e+04												
						120.0	168.76	479.60	167.01	321.01	9058.71	
421.23												
34	227	574.99	1.070e+04	-0.16	260.83	0.0	-170.70	57.65	-164.25	500.82	1.070e+04	-
2.215e+04												
		-2.215e+04	-9075.44	0.20	0.0	60.0	-170.70	188.07	-164.25	500.82	810.49	-

Viale Duca Alessandro n. 11 – 43123 Parma
Cell. 335 1403156 – E mail ing.concari@gmail.com
Sito web: studioaire.it – P.IVA 02561480340

1.470e+04												
						120.0	-170.70	318.49	-164.25	500.82	-9075.44	
574.99												
34	230	417.54	9367.17	-0.10	260.83	0.0	165.51	224.51	169.69	318.08	-1.105e+04	-
4.201e+04												
		-4.201e+04	-1.105e+04	-0.11	0.0	60.0	165.51	354.93	169.69	318.08	-841.34	-
2.471e+04												
						120.0	165.51	485.34	169.69	318.08	9367.17	
417.54												
34	231	578.67	1.070e+04	-0.16	260.83	0.0	-167.45	51.91	-166.93	503.75	1.070e+04	-
2.146e+04												
		-2.146e+04	-9383.91	0.17	0.0	60.0	-167.45	182.33	-166.93	503.75	658.70	-
1.435e+04												
						120.0	-167.45	312.74	-166.93	503.75	-9383.91	
578.67												
34	246	395.13	9175.71	-0.09	260.83	0.0	137.70	252.76	157.20	317.72	-9743.95	-
4.538e+04												
		-4.538e+04	-9743.95	-0.03	0.0	60.0	137.70	383.17	157.20	317.72	-284.12	-
2.641e+04												
						120.0	137.70	513.59	157.20	317.72	9175.71	
395.13												
34	247	601.09	9395.41	-0.17	260.83	0.0	-139.64	23.66	-154.43	504.11	9395.41	-
1.809e+04												
		-1.809e+04	-9192.45	0.09	0.0	60.0	-139.64	154.08	-154.43	504.11	101.48	-
1.266e+04												
						120.0	-139.64	284.49	-154.43	504.11	-9192.45	
601.09												
34	273	702.20	1513.72	-0.19	376.03	0.0	24.42	199.97	38.67	569.27	-2280.99	-
4.586e+04												
		-4.586e+04	-2280.99	0.01	-14.10	60.0	24.42	387.98	31.62	569.27	-172.17	-
2.822e+04												
						120.0	24.42	576.00	24.57	569.27	1513.72	
702.20												
34	285	178.89	2428.56	-0.04	88.03	0.0	40.57	48.11	60.08	129.44	-3370.92	-
1.088e+04												
		-1.088e+04	-3370.92	-0.04	-23.50	60.0	40.57	92.13	48.33	129.44	-118.74	-
6669.10												
						120.0	40.57	136.14	36.58	129.44	2428.56	
178.89												
34	303	719.78	2294.20	-0.20	376.03	0.0	-31.24	197.78	-40.02	594.48	2294.20	-
4.558e+04												
		-4.558e+04	-2508.67	0.05	0.0	60.0	-38.29	385.79	-40.02	594.48	-107.24	-
2.807e+04												
						120.0	-45.34	573.81	-40.02	594.48	-2508.67	
719.78												
34	319	202.36	4096.38	-0.05	88.03	0.0	-48.05	45.23	-67.91	168.61	4096.38	-
1.051e+04												
		-1.051e+04	-4052.34	0.03	0.0	60.0	-59.80	89.24	-67.91	168.61	22.02	-
6472.66												
						120.0	-71.55	133.26	-67.91	168.61	-4052.34	
202.36												
34	323	568.36	3966.21	-0.16	289.63	0.0	-48.77	151.69	-66.87	470.80	3966.21	-
3.501e+04												
		-3.501e+04	-4058.78	0.05	0.0	60.0	-60.51	296.51	-66.87	470.80	-46.28	-
2.157e+04												
						120.0	-72.26	441.32	-66.87	470.80	-4058.78	
568.36												
34	325	184.40	-2.84	-0.04	88.03	0.0	-0.36	46.96	0.50	151.89	-62.70	-
1.073e+04												
		-1.073e+04	-62.70	0.01	0.0	60.0	-0.36	90.97	0.50	151.89	-32.77	-
6594.36												
						120.0	-0.36	134.99	0.50	151.89	-2.84	
184.40												
34	327	498.11	-8.37	-0.13	260.83	0.0	-0.97	138.21	1.38	410.92	-174.27	-
3.174e+04												
		-3.174e+04	-174.27	0.03	0.0	60.0	-0.97	268.63	1.38	410.92	-91.32	-
1.953e+04												
						120.0	-0.97	399.04	1.38	410.92	-8.37	
498.11												
34	331	550.39	-9.29	-0.15	289.63	0.0	-1.07	153.42	1.53	454.09	-192.87	-
3.524e+04												
		-3.524e+04	-192.87	0.03	0.0	60.0	-1.07	298.23	1.53	454.09	-101.08	-
2.169e+04												
						120.0	-1.07	443.05	1.53	454.09	-9.29	
550.39												
34	345	184.17	449.97	-0.04	88.03	0.0	7.20	47.07	11.94	147.83	-700.65	-
1.075e+04												
		-1.075e+04	-700.65	-2.23e-03	-4.70	60.0	7.20	91.09	9.59	147.83	-54.85	-
6601.55												
						120.0	7.20	135.10	7.24	147.83	449.97	
184.17												
34	347	497.89	444.45	-0.13	260.83	0.0	6.59	138.33	12.82	406.85	-812.22	-
3.175e+04												
		-3.175e+04	-812.22	0.02	-4.70	60.0	6.59	268.74	10.47	406.85	-113.40	-
1.954e+04												
						120.0	6.59	399.16	8.12	406.85	444.45	
497.89												
34	349	187.11	745.41	-0.04	88.03	0.0	-9.28	46.73	-12.71	154.81	745.41	-
1.070e+04												
		-1.070e+04	-779.28	0.02	0.0	60.0	-11.63	90.74	-12.71	154.81	-16.93	-
6577.78												
						120.0	-13.97	134.76	-12.71	154.81	-779.28	

Viale Duca Alessandro n. 11 – 43123 Parma
Cell. 335 1403156 – E mail ing.concari@gmail.com
Sito web: studioaire.it – P.IVA 02561480340

187.11												
34	351	500.82	633.84	-0.14	260.83	0.0	-9.89	137.98	-11.82	413.83	633.84	-
3.171e+04												
		-3.171e+04	-784.80	0.04	0.0	60.0	-12.24	268.39	-11.82	413.83	-75.48	-
1.952e+04												
						120.0	-14.59	398.81	-11.82	413.83	-784.80	
500.82												
35	21	8.017e+04	454.02	0.06	-40.90	0.0	907.34	-963.62	10.80	-62.88	-841.47	
8.017e+04												
		-3.792e+04	-841.47	-0.04	0.0	60.0	907.34	-984.07	10.80	-62.88	-193.72	
2.174e+04												
						120.0	907.34	-1004.52	10.80	-62.88	454.02	-
3.792e+04												
35	63	5.448e+04	5610.51	0.03	-40.90	0.0	-728.00	-1328.33	-81.63	-48.36	5610.51	
5.448e+04												
		-1.074e+05	-4185.21	0.06	0.0	60.0	-738.58	-1348.78	-81.63	-48.36	712.65	-
2.583e+04												
						120.0	-749.15	-1369.23	-81.63	-48.36	-4185.21	-
1.074e+05												
35	79	5.849e+04	5190.95	0.04	-40.90	0.0	-447.76	-1499.37	-72.70	-50.96	5190.95	
5.849e+04												
		-1.239e+05	-3533.38	0.05	0.0	60.0	-465.38	-1519.83	-72.70	-50.96	828.78	-
3.209e+04												
						120.0	-483.00	-1540.28	-72.70	-50.96	-3533.38	-
1.239e+05												
35	101	1.191e+05	1049.34	0.08	-40.90	0.0	549.79	-1611.19	-5.64	-79.90	1049.34	
1.191e+05												
		-7.672e+04	-895.69	-0.05	-21.15	60.0	549.79	-1631.64	-16.21	-79.90	394.02	
2.179e+04												
						120.0	549.79	-1652.09	-26.78	-79.90	-895.69	-
7.672e+04												
35	123	2.700e+04	3370.39	8.91e-03	-31.46	0.0	-844.51	-595.64	-38.41	-10.61	3370.39	
2.700e+04												
		-4.637e+04	-2507.58	0.02	-21.15	60.0	-844.51	-611.37	-48.98	-10.61	748.60	-
9214.70												
						120.0	-844.51	-627.10	-59.56	-10.61	-2507.58	-
4.637e+04												
35	153	4.947e+04	1.154e+04	0.05	-31.46	0.0	-245.31	-2383.17	187.37	-34.60	-3807.46	
4.947e+04												
		-2.249e+05	-3807.46	0.13	0.0	60.0	-245.31	-2398.90	187.37	-34.60	3864.76	-
8.723e+04												
						120.0	-245.31	-2414.63	187.37	-34.60	1.154e+04	-
2.249e+05												
35	173	1.277e+05	1.669e+04	0.08	-31.46	0.0	-401.44	-2394.84	234.35	-43.74	1.669e+04	
1.277e+05												
		-1.686e+05	1.420e+04	-0.09	0.0	60.0	-401.44	-2410.57	234.35	-43.74	1.544e+04	-
1.999e+04												
						120.0	-401.44	-2426.30	234.35	-43.74	1.420e+04	-
1.686e+05												
35	176	9.878e+04	-1.432e+04	-0.03	-31.46	0.0	547.16	1129.14	-271.95	-27.21	-1.432e+04	-
4.193e+04												
		-4.193e+04	-1.634e+04	0.10	0.0	60.0	547.16	1113.41	-271.95	-27.21	-1.533e+04	
2.890e+04												
						120.0	547.16	1097.68	-271.95	-27.21	-1.634e+04	
9.878e+04												
35	181	1.402e+05	1.628e+04	0.09	-31.46	0.0	-471.29	-2564.92	-153.18	-43.43	1.628e+04	
1.402e+05												
		-1.604e+05	-8379.68	-0.02	0.0	60.0	-471.29	-2580.66	-153.18	-43.43	3951.48	-
9607.52												
						120.0	-471.29	-2596.39	-153.18	-43.43	-8379.68	-
1.604e+05												
35	183	1.602e+05	1.013e+04	0.10	-31.46	0.0	-288.24	-1722.84	-251.61	-45.54	1.013e+04	
1.602e+05												
		-6.537e+04	-1.432e+04	-0.10	0.0	60.0	-288.24	-1738.57	-251.61	-45.54	-2094.77	
4.790e+04												
						120.0	-288.24	-1754.30	-251.61	-45.54	-1.432e+04	-
6.537e+04												
35	184	9.049e+04	6233.73	-0.04	-31.46	0.0	617.00	1299.22	115.58	-27.53	-1.392e+04	-
5.439e+04												
		-5.439e+04	-1.392e+04	0.02	0.0	60.0	617.00	1283.49	115.58	-27.53	-3841.28	
1.852e+04												
						120.0	617.00	1267.76	115.58	-27.53	6233.73	
9.049e+04												
35	185	4.636e+04	4604.95	0.04	-31.46	0.0	-70.51	-1407.75	73.73	-35.12	-968.93	
4.636e+04												
		-1.184e+05	-968.93	0.06	0.0	60.0	-70.51	-1423.49	73.73	-35.12	1818.01	-
3.555e+04												
						120.0	-70.51	-1439.22	73.73	-35.12	4604.95	-
1.184e+05												
35	205	8.238e+04	8241.73	0.05	-31.46	0.0	-142.86	-1426.83	96.81	-39.34	8241.73	
8.238e+04												
		-9.395e+04	5925.69	-0.04	0.0	60.0	-142.86	-1442.56	96.81	-39.34	7083.71	-
5315.88												
						120.0	-142.86	-1458.29	96.81	-39.34	5925.69	-
9.395e+04												
35	208	2.409e+04	-5875.38	-4.56e-03	-31.46	0.0	288.57	161.13	-134.42	-31.62	-5875.38	
3420.84												
		3420.84	-8071.64	0.05	0.0	60.0	288.57	145.40	-134.42	-31.62	-6973.51	
1.423e+04												
						120.0	288.57	129.67	-134.42	-31.62	-8071.64	
2.409e+04												
35	213	8.775e+04	8106.54	0.06	-31.46	0.0	-175.18	-1504.13	-82.14	-39.17	8106.54	

Viale Duca Alessandro n. 11 – 43123 Parma
Cell. 335 1403156 – E mail ing.concari@gmail.com
Sito web: studioaire.it – P.IVA 02561480340

8.775e+04												
		-9.070e+04	-4519.47	-7.25e-03	0.0	60.0	-175.18	-1519.86	-82.14	-39.17	1793.54	-
1003.35												
						120.0	-175.18	-1535.59	-82.14	-39.17	-4519.47	-
9.070e+04												
35	215	9.655e+04	5391.44	0.06	-31.46	0.0	-93.84	-1134.37	-125.77	-40.12	5391.44	
9.655e+04												
		-4.900e+04	-7172.10	-0.04	0.0	60.0	-93.84	-1150.10	-125.77	-40.12	-890.33	
2.424e+04												
						120.0	-93.84	-1165.83	-125.77	-40.12	-7172.10	-
4.900e+04												
35	216	2.084e+04	2373.52	-5.88e-03	-31.46	0.0	320.89	238.43	44.54	-31.78	-5740.20	-
1948.54												
		-1948.54	-5740.20	9.17e-03	0.0	60.0	320.89	222.70	44.54	-31.78	-1683.34	
9916.34												
						120.0	320.89	206.97	44.54	-31.78	2373.52	
2.084e+04												
35	217	4.579e+04	3528.20	0.03	-31.46	0.0	-43.33	-1258.33	56.13	-35.19	-543.75	
4.579e+04												
		-1.022e+05	-543.75	0.05	0.0	60.0	-43.33	-1274.06	56.13	-35.19	1492.22	-
2.773e+04												
						120.0	-43.33	-1289.79	56.13	-35.19	3528.20	-
1.022e+05												
35	237	7.511e+04	6916.19	0.05	-31.46	0.0	-102.31	-1276.28	75.17	-38.63	6916.19	
7.511e+04												
		-8.254e+04	4620.16	-0.03	0.0	60.0	-102.31	-1292.01	75.17	-38.63	5768.17	-
3241.73												
						120.0	-102.31	-1307.74	75.17	-38.63	4620.16	-
8.254e+04												
35	240	1.268e+04	-4549.84	4.59e-03	-31.46	0.0	248.02	10.58	-112.78	-32.32	-4549.84	
1.068e+04												
		1.068e+04	-6766.11	0.04	0.0	60.0	248.02	-5.15	-112.78	-32.32	-5657.98	
1.215e+04												
						120.0	248.02	-20.88	-112.78	-32.32	-6766.11	
1.268e+04												
35	245	7.920e+04	6789.45	0.05	-31.46	0.0	-127.81	-1336.56	-70.26	-38.47	6789.45	
7.920e+04												
		-7.990e+04	-3875.74	6.29e-03	0.0	60.0	-127.81	-1352.29	-70.26	-38.47	1456.85	
123.08												
						120.0	-127.81	-1368.02	-70.26	-38.47	-3875.74	-
7.990e+04												
35	247	8.629e+04	4599.63	0.05	-31.46	0.0	-62.09	-1038.65	-105.49	-39.24	4599.63	
8.629e+04												
		-4.631e+04	-6021.64	-0.03	0.0	60.0	-62.09	-1054.39	-105.49	-39.24	-711.00	
2.046e+04												
						120.0	-62.09	-1070.12	-105.49	-39.24	-6021.64	-
4.631e+04												
35	248	1.004e+04	1729.79	-1.96e-03	-31.46	0.0	273.52	70.86	32.66	-32.48	-4423.10	
6594.16												
		6594.16	-4423.10	7.71e-03	0.0	60.0	273.52	55.13	32.66	-32.48	-1346.66	
8789.90												
						120.0	273.52	39.39	32.66	-32.48	1729.79	
1.004e+04												
35	261	5.555e+04	251.91	0.04	-31.46	0.0	608.10	-672.72	6.31	-43.78	-505.14	
5.555e+04												
		-2.707e+04	-505.14	-0.03	0.0	60.0	608.10	-688.45	6.31	-43.78	-126.62	
1.471e+04												
						120.0	608.10	-704.18	6.31	-43.78	251.91	-
2.707e+04												
35	283	3.842e+04	3796.17	0.02	-31.46	0.0	-482.13	-915.86	-55.31	-34.10	3796.17	
3.842e+04												
		-7.337e+04	-2840.91	0.04	0.0	60.0	-489.18	-931.59	-55.31	-34.10	477.63	-
1.700e+04												
						120.0	-496.23	-947.32	-55.31	-34.10	-2840.91	-
7.337e+04												
35	291	4.109e+04	3516.46	0.02	-31.46	0.0	-295.30	-1029.89	-49.36	-35.84	3516.46	
4.109e+04												
		-8.438e+04	-2406.36	0.03	0.0	60.0	-307.05	-1045.62	-49.36	-35.84	555.05	-
2.117e+04												
						120.0	-318.79	-1061.35	-49.36	-35.84	-2406.36	-
8.438e+04												
35	301	8.149e+04	755.39	0.05	-31.46	0.0	369.73	-1104.43	-4.65	-55.13	755.39	
8.149e+04												
		-5.293e+04	-647.90	-0.03	-14.10	60.0	369.73	-1120.16	-11.69	-55.13	265.21	
1.475e+04												
						120.0	369.73	-1135.89	-18.74	-55.13	-647.90	-
5.293e+04												
35	307	2.325e+04	2386.51	8.69e-03	-31.46	0.0	-554.99	-472.85	-27.83	-11.73	2386.51	
2.325e+04												
		-3.538e+04	-1798.65	0.01	-14.10	60.0	-554.99	-488.58	-34.88	-11.73	505.39	-
5593.50												
						120.0	-554.99	-504.31	-41.93	-11.73	-1798.65	-
3.538e+04												
35	325	1.576e+04	418.75	9.68e-03	-31.46	0.0	24.04	-227.28	-6.66	-13.97	418.75	
1.576e+04												
		-1.340e+04	-380.79	1.66e-03	0.0	60.0	24.04	-243.02	-6.66	-13.97	18.98	
1648.90												
						120.0	24.04	-258.75	-6.66	-13.97	-380.79	-
1.340e+04												
35	327	4.290e+04	1183.17	0.03	-31.46	0.0	72.86	-632.85	-18.80	-35.48	1183.17	
4.290e+04												
		-3.493e+04	-1072.97	5.02e-03	0.0	60.0	72.86	-648.58	-18.80	-35.48	55.10	

Viale Duca Alessandro n. 11 – 43123 Parma
Cell. 335 1403156 – E mail ing.concari@gmail.com
Sito web: studioaire.it – P.IVA 02561480340

4456.49												
						120.0	72.86	-664.31	-18.80	-35.48	-1072.97	-
3.493e+04												
35	335	1.170e+04	1326.61	4.10e-03	-31.46	0.0	-239.51	-241.15	-20.23	-11.61	1326.61	
1.170e+04												
		-1.913e+04	-1100.91	0.02	0.0	60.0	-239.51	-256.88	-20.23	-11.61	112.85	-
3245.47												
						120.0	-239.51	-272.61	-20.23	-11.61	-1100.91	-
1.913e+04												
35	337	4.696e+04	275.31	0.03	-31.46	0.0	336.41	-618.99	-5.23	-37.84	275.31	
4.696e+04												
		-2.920e+04	-352.85	-0.01	0.0	60.0	336.41	-634.72	-5.23	-37.84	-38.77	
9350.86												
						120.0	336.41	-650.45	-5.23	-37.84	-352.85	-
2.920e+04												
35	339	3.884e+04	2091.03	0.02	-31.46	0.0	-190.70	-646.71	-32.37	-33.11	2091.03	
3.884e+04												
		-4.066e+04	-1793.10	0.02	0.0	60.0	-190.70	-662.45	-32.37	-33.11	148.97	-
437.88												
						120.0	-190.70	-678.18	-32.37	-33.11	-1793.10	-
4.066e+04												
35	347	4.261e+04	1406.46	0.03	-31.46	0.0	60.85	-695.41	-21.25	-35.40	1406.46	
4.261e+04												
		-4.273e+04	-1143.75	6.60e-03	0.0	60.0	58.50	-711.14	-21.25	-35.40	131.36	
411.56												
						120.0	56.15	-726.87	-21.25	-35.40	-1143.75	-
4.273e+04												
35	351	4.810e+04	1233.85	0.03	-31.46	0.0	55.55	-705.46	-16.81	-36.30	1233.85	
4.810e+04												
		-3.844e+04	-1065.51	-2.12e-03	-4.70	60.0	55.55	-721.19	-19.16	-36.30	154.66	
5305.27												
						120.0	55.55	-736.93	-21.51	-36.30	-1065.51	-
3.844e+04												
36	21	-3.771e+04	318.77	4.74e-03	-6.01	0.0	895.36	-2652.44	50.63	825.01	-187.53	-
3.771e+04												
		-6.426e+04	-187.53	-3.23e-03	0.0	5.0	895.36	-2655.44	50.63	825.01	65.62	-
5.098e+04												
						10.0	895.36	-2658.45	50.63	825.01	318.77	-
6.426e+04												
36	25	3540.60	551.34	3.61e-03	-4.62	0.0	790.22	-584.54	102.15	450.32	-470.16	
3540.60												
		-2327.86	-470.16	-3.23e-03	0.0	5.0	790.22	-586.85	102.15	450.32	40.59	
612.15												
						10.0	790.22	-589.16	102.15	450.32	551.34	-
2327.86												
36	67	-6.394e+04	1210.27	-5.64e-03	-4.62	0.0	-862.09	-904.79	-132.59	-22.82	1210.27	-
6.394e+04												
		-7.302e+04	-115.58	4.02e-03	0.0	5.0	-862.97	-907.10	-132.59	-22.82	547.35	-
6.847e+04												
						10.0	-863.85	-909.41	-132.59	-22.82	-115.58	-
7.302e+04												
36	79	-1.210e+05	1662.86	-4.99e-03	-6.01	0.0	-536.52	-3145.68	-138.83	499.74	1662.86	-
1.210e+05												
		-1.525e+05	274.52	3.28e-03	0.0	5.0	-537.99	-3148.68	-138.83	499.74	968.69	-
1.368e+05												
						10.0	-539.46	-3151.69	-138.83	499.74	274.52	-
1.525e+05												
36	143	-9.160e+04	27.64	9.63e-04	-6.01	0.0	-444.19	-3342.24	-298.21	-203.17	27.64	-
9.160e+04												
		-1.251e+05	-2969.12	-1.98e-03	-2.94	5.0	-444.19	-3345.25	-299.68	-203.17	-1467.07	-
1.083e+05												
						10.0	-444.19	-3348.25	-301.14	-203.17	-2969.12	-
1.251e+05												
36	153	-2.256e+05	4447.20	-0.01	-4.62	0.0	-373.19	-3656.71	-645.16	1282.31	4447.20	-
2.256e+05												
		-2.611e+05	1736.40	7.16e-03	0.0	5.0	-373.19	-3659.02	-645.16	1282.31	3091.80	-
2.434e+05												
						10.0	-373.19	-3661.33	-645.16	1282.31	1736.40	-
2.611e+05												
36	156	1.583e+05	-2108.92	0.01	-4.62	0.0	539.01	286.00	562.66	-550.78	-3994.77	
1.564e+05												
		1.564e+05	-3994.77	-7.20e-03	0.0	5.0	539.01	283.68	562.66	-550.78	-3051.85	
1.574e+05												
						10.0	539.01	281.37	562.66	-550.78	-2108.92	
1.583e+05												
36	165	-2.169e+05	4568.54	-9.61e-03	-4.62	0.0	-450.99	-3697.52	240.53	1745.96	4568.54	-
2.169e+05												
		-2.532e+05	3801.36	0.01	0.0	5.0	-450.99	-3699.83	240.53	1745.96	4184.95	-
2.350e+05												
						10.0	-450.99	-3702.14	240.53	1745.96	3801.36	-
2.532e+05												
36	168	1.503e+05	-4116.11	0.01	-4.62	0.0	616.81	326.80	-323.03	-1014.44	-4116.11	
1.478e+05												
		1.478e+05	-4173.88	-0.01	0.0	5.0	616.81	324.49	-323.03	-1014.44	-4144.99	
1.490e+05												
						10.0	616.81	322.18	-323.03	-1014.44	-4173.88	
1.503e+05												
36	174	4793.84	8366.04	-7.61e-03	-4.62	0.0	290.77	-601.38	713.43	2203.07	-2067.63	
4793.84												
		-3719.73	-2067.63	0.02	0.0	5.0	290.77	-603.69	713.43	2203.07	3149.20	
542.83												
						10.0	290.77	-606.00	713.43	2203.07	8366.04	-

Viale Duca Alessandro n. 11 – 43123 Parma
Cell. 335 1403156 – E mail ing.concari@gmail.com
Sito web: studioaire.it – P.IVA 02561480340

3719.73												
36	175	-7.393e+04	2520.06	9.44e-03	-4.62	0.0	-124.94	-2769.33	-795.92	-1471.55	2520.06	-
7.393e+04												
		-9.917e+04	-8738.56	-0.02	0.0	5.0	-124.94	-2771.64	-795.92	-1471.55	-3109.25	-
8.654e+04												
						10.0	-124.94	-2773.95	-795.92	-1471.55	-8738.56	-
9.917e+04												
36	185	-1.185e+05	2133.43	-3.91e-03	-4.62	0.0	-123.96	-2560.07	-315.55	765.92	2133.43	-
1.185e+05												
		-1.437e+05	688.06	3.12e-03	0.0	5.0	-123.96	-2562.38	-315.55	765.92	1410.75	-
1.311e+05												
						10.0	-123.96	-2564.69	-315.55	765.92	688.06	-
1.437e+05												
36	188	4.938e+04	-1060.57	5.73e-03	-4.62	0.0	289.78	-810.64	233.05	-34.40	-1681.00	
4.938e+04												
		4.078e+04	-1681.00	-3.16e-03	0.0	5.0	289.78	-812.95	233.05	-34.40	-1370.79	
4.508e+04												
						10.0	289.78	-815.26	233.05	-34.40	-1060.57	
4.078e+04												
36	197	-1.148e+05	2195.05	-3.67e-03	-4.62	0.0	-159.41	-2578.06	84.21	968.91	2195.05	-
1.148e+05												
		-1.403e+05	1656.90	5.38e-03	0.0	5.0	-159.41	-2580.37	84.21	968.91	1925.97	-
1.275e+05												
						10.0	-159.41	-2582.69	84.21	968.91	1656.90	-
1.403e+05												
36	200	4.567e+04	-1742.62	5.49e-03	-4.62	0.0	325.24	-792.65	-166.71	-237.39	-1742.62	
4.567e+04												
		3.740e+04	-2029.42	-5.42e-03	0.0	5.0	325.24	-794.96	-166.71	-237.39	-1886.02	
4.154e+04												
						10.0	325.24	-797.27	-166.71	-237.39	-2029.42	
3.740e+04												
36	206	-1.697e+04	3793.44	-2.97e-03	-4.62	0.0	178.41	-1181.00	308.92	1185.78	-812.43	-
1.697e+04												
		-2.995e+04	-812.43	7.11e-03	0.0	5.0	178.41	-1183.31	308.92	1185.78	1490.51	-
2.346e+04												
						10.0	178.41	-1185.62	308.92	1185.78	3793.44	-
2.995e+04												
36	207	-5.216e+04	1264.86	4.80e-03	-4.62	0.0	-12.59	-2189.72	-391.42	-454.26	1264.86	-
5.216e+04												
		-7.294e+04	-4165.96	-7.15e-03	0.0	5.0	-12.59	-2192.03	-391.42	-454.26	-1450.55	-
6.254e+04												
						10.0	-12.59	-2194.34	-391.42	-454.26	-4165.96	-
7.294e+04												
36	217	-1.022e+05	1773.17	-2.96e-03	-4.62	0.0	-85.02	-2391.76	-263.93	687.74	1773.17	-
1.022e+05												
		-1.258e+05	524.03	2.51e-03	0.0	5.0	-85.02	-2394.07	-263.93	687.74	1148.60	-
1.140e+05												
						10.0	-85.02	-2396.38	-263.93	687.74	524.03	-
1.258e+05												
36	220	3.308e+04	-896.54	4.79e-03	-4.62	0.0	250.84	-978.96	181.44	43.79	-1320.74	
3.308e+04												
		2.288e+04	-1320.74	-2.55e-03	0.0	5.0	250.84	-981.27	181.44	43.79	-1108.64	
2.799e+04												
						10.0	250.84	-983.58	181.44	43.79	-896.54	
2.288e+04												
36	229	-9.922e+04	1823.88	-2.77e-03	-4.62	0.0	-113.66	-2405.35	60.44	851.63	1823.88	-
9.922e+04												
		-1.230e+05	1317.78	4.35e-03	0.0	5.0	-113.66	-2407.66	60.44	851.63	1570.83	-
1.111e+05												
						10.0	-113.66	-2409.97	60.44	851.63	1317.78	-
1.230e+05												
36	232	3.009e+04	-1371.45	4.60e-03	-4.62	0.0	279.48	-965.36	-142.94	-120.10	-1371.45	
3.009e+04												
		2.015e+04	-1690.30	-4.38e-03	0.0	5.0	279.48	-967.67	-142.94	-120.10	-1530.88	
2.512e+04												
						10.0	279.48	-969.98	-142.94	-120.10	-1690.30	
2.015e+04												
36	238	-2.033e+04	3061.14	-2.24e-03	-4.62	0.0	160.64	-1273.79	244.31	1028.89	-616.55	-
2.033e+04												
		-3.403e+04	-616.55	5.77e-03	0.0	5.0	160.64	-1276.10	244.31	1028.89	1222.30	-
2.718e+04												
						10.0	160.64	-1278.41	244.31	1028.89	3061.14	-
3.403e+04												
36	239	-4.880e+04	1068.98	4.07e-03	-4.62	0.0	5.18	-2096.93	-326.81	-297.37	1068.98	-
4.880e+04												
		-6.886e+04	-3433.65	-5.81e-03	0.0	5.0	5.18	-2099.24	-326.81	-297.37	-1182.34	-
5.883e+04												
						10.0	5.18	-2101.55	-326.81	-297.37	-3433.65	-
6.886e+04												
36	257	-2063.46	346.09	2.52e-03	-4.62	0.0	536.00	-592.33	63.35	361.22	-287.41	-
2063.46												
		-8009.84	-287.41	-2.16e-03	0.0	5.0	536.00	-594.64	63.35	361.22	29.34	-
5030.88												
						10.0	536.00	-596.95	63.35	361.22	346.09	-
8009.84												
36	261	-2.691e+04	203.92	3.20e-03	-4.62	0.0	600.58	-1849.35	31.85	574.41	-114.61	-
2.691e+04												
		-4.543e+04	-114.61	-2.16e-03	0.0	5.0	600.58	-1851.66	31.85	574.41	44.66	-
3.616e+04												
						10.0	600.58	-1853.97	31.85	574.41	203.92	-
4.543e+04												
36	279	-4.705e+04	832.88	-3.65e-03	-4.62	0.0	-565.54	-805.83	-93.14	45.80	832.88	-

Viale Duca Alessandro n. 11 – 43123 Parma
Cell. 335 1403156 – E mail ing.concari@gmail.com
Sito web: studioaire.it – P.IVA 02561480340

4.705e+04												
		-5.514e+04	-98.52	2.67e-03	0.0	5.0	-566.13	-808.14	-93.14	45.80	367.18	-
5.109e+04												
						10.0	-566.71	-810.45	-93.14	45.80	-98.52	-
5.514e+04												
36	291	-8.247e+04	1118.99	-3.28e-03	-4.62	0.0	-354.01	-2178.17	-94.46	357.56	1118.99	-
8.247e+04												
		-1.043e+05	174.42	2.19e-03	0.0	5.0	-354.99	-2180.48	-94.46	357.56	646.71	-
9.336e+04												
						10.0	-355.97	-2182.80	-94.46	357.56	174.42	-
1.043e+05												
36	323	-6.284e+04	28.84	6.86e-04	-4.62	0.0	-292.45	-2309.22	-200.71	-111.04	28.84	-
6.284e+04												
		-8.595e+04	-1988.00	-1.32e-03	-1.96	5.0	-292.45	-2311.53	-201.68	-111.04	-977.13	-
7.439e+04												
						10.0	-292.45	-2313.84	-202.66	-111.04	-1988.00	-
8.595e+04												
36	325	-1.327e+04	78.10	3.28e-04	-4.62	0.0	27.55	-607.91	-14.25	183.03	78.10	-
1.327e+04												
		-1.937e+04	-64.40	-1.76e-05	0.0	5.0	27.55	-610.22	-14.25	183.03	6.85	-
1.632e+04												
						10.0	27.55	-612.53	-14.25	183.03	-64.40	-
1.937e+04												
36	327	-3.457e+04	226.22	9.14e-04	-4.62	0.0	82.91	-1685.36	-41.25	365.76	226.22	-
3.457e+04												
		-5.145e+04	-186.26	-1.86e-05	0.0	5.0	82.91	-1687.67	-41.25	365.76	19.98	-
4.300e+04												
						10.0	82.91	-1689.98	-41.25	365.76	-186.26	-
5.145e+04												
36	333	-7667.53	140.84	1.42e-03	-4.62	0.0	281.77	-600.12	24.55	272.12	-104.65	-
7667.53												
		-1.369e+04	-104.65	-1.09e-03	0.0	5.0	281.77	-602.43	24.55	272.12	18.10	-
1.067e+04												
						10.0	281.77	-604.74	24.55	272.12	140.84	-
1.369e+04												
36	335	-1.888e+04	260.86	-7.67e-04	-4.62	0.0	-226.67	-615.70	-53.05	93.93	260.86	-
1.888e+04												
		-2.506e+04	-269.65	1.05e-03	0.0	5.0	-226.67	-618.01	-53.05	93.93	-4.40	-
2.196e+04												
						10.0	-226.67	-620.33	-53.05	93.93	-269.65	-
2.506e+04												
36	337	-2.896e+04	43.46	2.01e-03	-4.62	0.0	337.13	-1677.57	-2.45	454.86	43.46	-
2.896e+04												
		-4.576e+04	18.99	-1.09e-03	0.0	5.0	337.13	-1679.88	-2.45	454.86	31.22	-
3.736e+04												
						10.0	337.13	-1682.19	-2.45	454.86	18.99	-
4.576e+04												
36	339	-4.017e+04	408.97	-1.81e-04	-4.62	0.0	-171.31	-1693.15	-80.05	276.67	408.97	-
4.017e+04												
		-5.713e+04	-391.50	1.05e-03	0.0	5.0	-171.31	-1695.46	-80.05	276.67	8.73	-
4.864e+04												
						10.0	-171.31	-1697.77	-80.05	276.67	-391.50	-
5.713e+04												
36	347	-4.209e+04	355.97	3.28e-04	-4.62	0.0	54.69	-1746.14	-41.68	379.41	355.97	-
4.209e+04												
		-5.958e+04	-60.80	1.66e-04	0.0	5.0	54.50	-1748.45	-41.68	379.41	147.59	-
5.083e+04												
						10.0	54.30	-1750.76	-41.68	379.41	-60.80	-
5.958e+04												
36	351	-3.817e+04	137.94	1.11e-03	-4.62	0.0	67.01	-1772.34	-62.93	285.69	137.94	-
3.817e+04												
		-5.591e+04	-493.29	-5.36e-04	-0.39	5.0	67.01	-1774.66	-63.12	285.69	-177.18	-
4.703e+04												
						10.0	67.01	-1776.97	-63.32	285.69	-493.29	-
5.591e+04												
37	21	-1.020e+04	335.27	5.62e-03	-3.41	0.0	-91.09	-1767.01	-32.08	-1024.32	335.27	-
1.020e+04												
		-2.789e+04	14.52	-2.94e-03	0.0	5.0	-91.09	-1768.72	-32.08	-1024.32	174.90	-
1.904e+04												
						10.0	-91.09	-1770.42	-32.08	-1024.32	14.52	-
2.789e+04												
37	79	-5.152e+04	-11.44	6.64e-04	-3.41	0.0	-382.29	-1980.75	6.53	-435.20	-76.70	-
5.152e+04												
		-7.134e+04	-76.70	2.31e-03	0.0	5.0	-383.76	-1982.45	6.53	-435.20	-44.07	-
6.143e+04												
						10.0	-385.23	-1984.16	6.53	-435.20	-11.44	-
7.134e+04												
37	123	-3379.21	-12.43	-1.90e-03	-2.62	0.0	-51.05	-94.78	27.18	-14.17	-275.44	-
3379.21												
		-4340.09	-275.44	2.52e-03	-1.76	5.0	-51.05	-96.09	26.30	-14.17	-141.73	-
3856.37												
						10.0	-51.05	-97.40	25.42	-14.17	-12.43	-
4340.09												
37	145	9008.17	64.53	9.10e-05	-2.62	0.0	54.69	-2.07	-3.62	-677.16	64.53	
9008.17												
		8974.37	13.67	-2.76e-03	-2.94	5.0	54.69	-3.38	-5.09	-677.16	42.77	
8994.55												
						10.0	54.69	-4.69	-6.55	-677.16	13.67	
8974.37												
37	154	-1.633e+05	85.01	-5.22e-03	-2.62	0.0	-1163.58	-2398.13	40.14	388.03	-510.44	-
1.633e+05												
		-1.857e+05	-510.44	0.02	0.0	5.0	-1163.58	-2399.44	40.14	388.03	-212.71	-

Viale Duca Alessandro n. 11 – 43123 Parma
Cell. 335 1403156 – E mail ing.concari@gmail.com
Sito web: studioaire.it – P.IVA 02561480340

1.745e+05												
						10.0	-1163.58	-2400.75	40.14	388.03	85.01	-
1.857e+05												
37	155	1.442e+05	633.89	0.01	-2.62	0.0	982.91	227.75	-52.56	-1265.71	633.89	
1.436e+05												
		1.436e+05	-85.76	-0.02	0.0	5.0	982.91	226.43	-52.56	-1265.71	274.06	
1.439e+05												
						10.0	982.91	225.12	-52.56	-1265.71	-85.76	
1.442e+05												
37	162	-1.557e+05	82.02	-5.68e-03	-2.62	0.0	-1103.97	-2435.84	48.55	484.71	-589.90	-
1.557e+05												
		-1.779e+05	-589.90	0.02	0.0	5.0	-1103.97	-2437.15	48.55	484.71	-253.94	-
1.668e+05												
						10.0	-1103.97	-2438.46	48.55	484.71	82.02	-
1.779e+05												
37	163	1.364e+05	713.35	0.01	-2.62	0.0	923.30	265.46	-60.97	-1362.38	713.35	
1.360e+05												
		1.360e+05	-82.77	-0.02	0.0	5.0	923.30	264.15	-60.97	-1362.38	315.29	
1.362e+05												
						10.0	923.30	262.84	-60.97	-1362.38	-82.77	
1.364e+05												
37	186	-7.722e+04	37.14	-8.55e-04	-2.62	0.0	-561.65	-1665.44	14.22	-70.90	-190.19	-
7.722e+04												
		-9.313e+04	-190.19	9.33e-03	0.0	5.0	-561.65	-1666.76	14.22	-70.90	-76.53	-
8.517e+04												
						10.0	-561.65	-1668.07	14.22	-70.90	37.14	-
9.313e+04												
37	187	5.751e+04	313.65	5.80e-03	-2.62	0.0	380.98	-504.94	-26.64	-806.78	313.65	
5.751e+04												
		5.169e+04	-37.89	-9.19e-03	0.0	5.0	380.98	-506.25	-26.64	-806.78	137.88	
5.460e+04												
						10.0	380.98	-507.56	-26.64	-806.78	-37.89	
5.169e+04												
37	194	-7.390e+04	35.87	-1.06e-03	-2.62	0.0	-535.54	-1681.87	17.90	-28.11	-225.04	-
7.390e+04												
		-8.971e+04	-225.04	8.83e-03	0.0	5.0	-535.54	-1683.18	17.90	-28.11	-94.59	-
8.180e+04												
						10.0	-535.54	-1684.49	17.90	-28.11	35.87	-
8.971e+04												
37	195	5.419e+04	348.49	6.00e-03	-2.62	0.0	354.88	-488.52	-30.32	-849.57	348.49	
5.419e+04												
		4.827e+04	-36.62	-8.69e-03	0.0	5.0	354.88	-489.83	-30.32	-849.57	155.93	
5.123e+04												
						10.0	354.88	-491.14	-30.32	-849.57	-36.62	
4.827e+04												
37	218	-6.413e+04	29.85	-1.99e-04	-2.62	0.0	-470.07	-1553.37	10.27	-141.49	-141.37	-
6.413e+04												
		-7.905e+04	-141.37	7.53e-03	0.0	5.0	-470.07	-1554.68	10.27	-141.49	-55.76	-
7.159e+04												
						10.0	-470.07	-1555.99	10.27	-141.49	29.85	-
7.905e+04												
37	219	4.442e+04	264.82	5.14e-03	-2.62	0.0	289.40	-617.01	-22.69	-736.18	264.82	
4.442e+04												
		3.761e+04	-30.61	-7.38e-03	0.0	5.0	289.40	-618.32	-22.69	-736.18	117.11	
4.102e+04												
						10.0	289.40	-619.63	-22.69	-736.18	-30.61	
3.761e+04												
37	226	-6.145e+04	28.84	-3.65e-04	-2.62	0.0	-449.04	-1566.58	13.23	-106.95	-169.43	-
6.145e+04												
		-7.630e+04	-169.43	7.13e-03	0.0	5.0	-449.04	-1567.89	13.23	-106.95	-70.30	-
6.887e+04												
						10.0	-449.04	-1569.20	13.23	-106.95	28.84	-
7.630e+04												
37	227	4.174e+04	292.88	5.31e-03	-2.62	0.0	268.38	-603.80	-25.65	-770.73	292.88	
4.174e+04												
		3.486e+04	-29.59	-6.99e-03	0.0	5.0	268.38	-605.12	-25.65	-770.73	131.65	
3.831e+04												
						10.0	268.38	-606.43	-25.65	-770.73	-29.59	
3.486e+04												
37	261	-7301.38	226.72	3.87e-03	-2.62	0.0	-65.29	-1232.15	-21.70	-710.23	226.72	-
7301.38												
		-1.964e+04	9.67	-1.96e-03	0.0	5.0	-65.29	-1233.46	-21.70	-710.23	118.19	-
1.347e+04												
						10.0	-65.29	-1234.77	-21.70	-710.23	9.67	-
1.964e+04												
37	291	-3.485e+04	-7.64	5.67e-04	-2.62	0.0	-259.42	-1374.64	4.03	-317.48	-47.93	-
3.485e+04												
		-4.861e+04	-47.93	1.54e-03	0.0	5.0	-260.40	-1375.95	4.03	-317.48	-27.79	-
4.172e+04												
						10.0	-261.38	-1377.26	4.03	-317.48	-7.64	-
4.861e+04												
37	307	-3506.16	-8.31	-9.59e-04	-2.62	0.0	-45.43	-198.54	17.32	-77.82	-175.62	-
3506.16												
		-5504.69	-175.62	1.68e-03	-1.17	5.0	-45.43	-199.85	16.73	-77.82	-90.50	-
4502.15												
						10.0	-45.43	-201.16	16.14	-77.82	-8.31	-
5504.69												
37	317	4752.09	51.02	3.71e-04	-2.62	0.0	25.06	-136.74	-3.21	-519.81	51.02	
4752.09												
		3371.62	9.08	-1.83e-03	-1.96	5.0	25.06	-138.05	-4.19	-519.81	32.50	
4065.13												
						10.0	25.06	-139.36	-5.17	-519.81	9.08	

Viale Duca Alessandro n. 11 – 43123 Parma
Cell. 335 1403156 – E mail ing.concari@gmail.com
Sito web: studioaire.it – P.IVA 02561480340

3371.62												
37	325	-3760.06	24.00	9.31e-04	-2.62	0.0	-34.20	-406.07	-2.41	-205.11	24.00	-
3760.06												
		-7833.89	-0.08	1.56e-05	0.0	5.0	-34.20	-407.38	-2.41	-205.11	11.96	-
5793.70												
						10.0	-34.20	-408.69	-2.41	-205.11	-0.08	-
7833.89												
37	327	-9854.33	61.73	2.47e-03	-2.62	0.0	-90.33	-1085.19	-6.21	-438.84	61.73	-
9854.33												
		-2.072e+04	-0.38	7.35e-05	0.0	5.0	-90.33	-1086.50	-6.21	-438.84	30.67	-
1.528e+04												
						10.0	-90.33	-1087.81	-6.21	-438.84	-0.38	-
2.072e+04												
37	333	-1975.72	103.35	1.50e-03	-2.62	0.0	-17.00	-422.96	-9.84	-321.33	103.35	-
1975.72												
		-6218.41	4.97	-1.01e-03	0.0	5.0	-17.00	-424.27	-9.84	-321.33	54.16	-
4093.79												
						10.0	-17.00	-425.58	-9.84	-321.33	4.97	-
6218.41												
37	335	-5544.39	-5.13	3.60e-04	-2.62	0.0	-51.40	-389.19	5.02	-88.89	-55.35	-
5544.39												
		-9449.37	-55.35	1.04e-03	0.0	5.0	-51.40	-390.50	5.02	-88.89	-30.24	-
7493.61												
						10.0	-51.40	-391.81	5.02	-88.89	-5.13	-
9449.37												
37	337	-8070.00	141.08	3.04e-03	-2.62	0.0	-73.13	-1102.08	-13.64	-555.06	141.08	-
8070.00												
		-1.910e+04	4.67	-9.48e-04	0.0	5.0	-73.13	-1103.39	-13.64	-555.06	72.87	-
1.358e+04												
						10.0	-73.13	-1104.70	-13.64	-555.06	4.67	-
1.910e+04												
37	347	-1.422e+04	57.58	2.18e-03	-2.62	0.0	-118.15	-1124.50	-5.82	-434.67	57.58	-
1.422e+04												
		-2.548e+04	-0.61	1.20e-04	0.0	5.0	-118.35	-1125.81	-5.82	-434.67	28.49	-
1.985e+04												
						10.0	-118.54	-1127.12	-5.82	-434.67	-0.61	-
2.548e+04												
38	45	6.637e+04	848.31	0.14	1366.10	0.0	-584.46	-1058.87	29.08	26.38	-1542.64	
6.637e+04												
		-7.663e+04	-2121.52	-0.12	-61.47	174.4	-179.18	-375.82	-1.66	26.38	848.31	-
5.875e+04												
						348.8	226.09	307.23	-32.40	26.38	-2121.52	-
6.473e+04												
38	47	6.471e+04	978.69	0.15	1366.10	0.0	-563.04	-1053.94	21.20	39.58	-286.39	
6.471e+04												
		-7.700e+04	-3613.85	-0.14	-61.47	174.4	-157.77	-370.89	-9.54	39.58	730.28	-
5.955e+04												
						348.8	247.51	312.16	-40.27	39.58	-3613.85	-
6.467e+04												
38	79	5.042e+04	1366.62	0.11	1042.10	0.0	-377.81	-806.95	42.32	30.37	-1672.32	
5.042e+04												
		-5.846e+04	-4777.65	-0.21	-102.45	174.4	-68.65	-285.90	-8.90	30.37	1242.34	-
4.489e+04												
						348.8	240.51	235.15	-60.13	30.37	-4777.65	-
4.931e+04												
38	101	6.226e+04	437.41	0.15	1397.47	0.0	-675.13	-1061.94	-1.61	35.64	437.41	
6.226e+04												
		-7.846e+04	-124.53	-0.01	0.0	174.4	-296.29	-363.21	-1.61	35.64	156.44	-
6.202e+04												
						348.8	82.56	335.53	-1.61	35.64	-124.53	-
6.444e+04												
38	103	6.060e+04	1693.67	0.16	1397.47	0.0	-653.71	-1057.01	-9.49	48.84	1693.67	
6.060e+04												
		-7.883e+04	-1616.86	-0.03	0.0	174.4	-274.87	-358.27	-9.49	48.84	38.40	-
6.282e+04												
						348.8	103.97	340.46	-9.49	48.84	-1616.86	-
6.438e+04												
38	119	4.565e+04	1909.13	0.12	1073.47	0.0	-499.00	-808.13	-10.97	45.16	1909.13	
4.565e+04												
		-6.046e+04	-1918.67	-0.03	0.0	174.4	-216.27	-271.39	-10.97	45.16	-4.77	-
4.849e+04												
						348.8	66.45	265.34	-10.97	45.16	-1918.67	-
4.902e+04												
38	162	4.892e+04	2.585e+04	0.03	652.08	0.0	560.86	-623.53	-152.16	-29.48	2.585e+04	
4.892e+04												
		-2.421e+04	-2.733e+04	-0.66	0.0	174.4	754.31	-297.49	-152.16	-29.48	-742.45	-
1.385e+04												
						348.8	947.76	28.55	-152.16	-29.48	-2.733e+04	-
1.976e+04												
38	163	1.624e+04	2.654e+04	0.11	652.08	0.0	-1167.20	-392.57	147.53	62.97	-2.503e+04	
1.624e+04												
		-4.882e+04	-2.503e+04	0.64	0.0	174.4	-973.75	-66.54	147.53	62.97	756.82	-
4.135e+04												
						348.8	-780.30	259.50	147.53	62.97	2.654e+04	-
4.208e+04												
38	182	6.204e+04	6857.15	0.06	652.08	0.0	293.56	-689.78	39.92	-41.34	-7071.78	
6.204e+04												
		-5.786e+04	-7071.78	0.33	0.0	174.4	487.01	-363.74	39.92	-41.34	-107.32	-
2.634e+04												
						348.8	680.46	-37.70	39.92	-41.34	6857.15	-
5.786e+04												
38	184	5.612e+04	1.959e+04	0.08	652.08	0.0	-124.24	-643.00	110.82	-21.25	-1.913e+04	

Viale Duca Alessandro n. 11 – 43123 Parma
Cell. 335 1403156 – E mail ing.concari@gmail.com
Sito web: studioaire.it – P.IVA 02561480340

5.612e+04												
		-6.933e+04	-1.913e+04	0.58	0.0	174.4	69.21	-316.96	110.82	-21.25	231.57	-
3.504e+04												
						348.8	262.66	9.08	110.82	-21.25	1.959e+04	-
6.933e+04												
38	194	3.990e+04	1.168e+04	0.05	652.08	0.0	76.86	-559.26	-68.69	-3.56	1.168e+04	
3.990e+04												
		-3.102e+04	-1.232e+04	-0.30	0.0	174.4	270.30	-233.22	-68.69	-3.56	-319.43	-
2.151e+04												
						348.8	463.75	92.82	-68.69	-3.56	-1.232e+04	-
2.605e+04												
38	195	2.526e+04	1.153e+04	0.08	652.08	0.0	-683.19	-456.84	64.06	37.05	-1.086e+04	
2.526e+04												
		-4.185e+04	-1.086e+04	0.27	0.0	174.4	-489.74	-130.80	64.06	37.05	333.80	-
3.369e+04												
						348.8	-296.29	195.23	64.06	37.05	1.153e+04	-
3.578e+04												
38	214	4.599e+04	3171.77	0.06	652.08	0.0	-40.01	-589.88	18.46	-8.86	-3269.84	
4.599e+04												
		-4.429e+04	-3269.84	0.14	0.0	174.4	153.43	-263.84	18.46	-8.86	-49.03	-
2.692e+04												
						348.8	346.88	62.20	18.46	-8.86	3171.77	-
4.297e+04												
38	216	4.338e+04	8763.50	0.07	652.08	0.0	-223.56	-569.32	49.60	-0.04	-8565.46	
4.338e+04												
		-4.902e+04	-8565.46	0.25	0.0	174.4	-30.11	-243.28	49.60	-0.04	99.02	-
3.074e+04												
						348.8	163.34	82.76	49.60	-0.04	8763.50	-
4.801e+04												
38	226	3.850e+04	9512.13	0.05	652.08	0.0	3.12	-549.40	-55.89	0.39	9512.13	
3.850e+04												
		-3.205e+04	-1.002e+04	-0.24	0.0	174.4	196.57	-223.36	-55.89	0.39	-255.50	-
2.269e+04												
						348.8	390.02	102.67	-55.89	0.39	-1.002e+04	-
2.701e+04												
38	227	2.665e+04	9230.01	0.08	652.08	0.0	-609.46	-466.70	51.27	33.10	-8690.28	
2.665e+04												
		-4.078e+04	-8690.28	0.22	0.0	174.4	-416.01	-140.66	51.27	33.10	269.86	-
3.252e+04												
						348.8	-222.56	185.38	51.27	33.10	9230.01	-
3.483e+04												
38	246	4.342e+04	2511.79	0.07	652.08	0.0	-91.14	-574.14	14.62	-3.88	-2589.25	
4.342e+04												
		-4.257e+04	-2589.25	0.11	0.0	174.4	102.31	-248.10	14.62	-3.88	-38.73	-
2.704e+04												
						348.8	295.76	77.94	14.62	-3.88	2511.79	-
4.064e+04												
38	248	4.132e+04	7016.95	0.07	652.08	0.0	-239.03	-557.57	39.71	3.23	-6856.14	
4.132e+04												
		-4.639e+04	-6856.14	0.20	0.0	174.4	-45.58	-231.53	39.71	3.23	80.41	-
3.012e+04												
						348.8	147.87	94.51	39.71	3.23	7016.95	-
4.470e+04												
38	273	4.603e+04	565.82	0.10	940.08	0.0	-403.83	-729.70	19.28	18.38	-1009.77	
4.603e+04												
		-5.265e+04	-1432.44	-0.08	-40.98	174.4	-124.94	-259.66	-1.21	18.38	565.82	-
4.025e+04												
						348.8	153.95	210.37	-21.70	18.38	-1432.44	-
4.455e+04												
38	275	4.492e+04	658.67	0.10	940.08	0.0	-389.55	-726.41	14.03	27.18	-172.27	
4.492e+04												
		-5.290e+04	-2427.33	-0.10	-40.98	174.4	-110.66	-256.38	-6.46	27.18	487.13	-
4.079e+04												
						348.8	168.23	213.66	-26.95	27.18	-2427.33	-
4.451e+04												
38	291	3.540e+04	913.65	0.08	724.08	0.0	-266.06	-561.75	28.11	21.04	-1096.23	
3.540e+04												
		-4.053e+04	-3203.20	-0.14	-68.30	174.4	-51.25	-199.71	-6.04	21.04	828.50	-
3.101e+04												
						348.8	163.56	162.33	-40.19	21.04	-3203.20	-
3.427e+04												
38	301	4.329e+04	310.26	0.10	960.99	0.0	-464.27	-731.75	-1.18	24.56	310.26	
4.329e+04												
		-5.387e+04	-101.12	-0.01	0.0	174.4	-203.01	-251.25	-1.18	24.56	104.57	-
4.243e+04												
						348.8	58.26	229.24	-1.18	24.56	-101.12	-
4.435e+04												
38	303	4.219e+04	1147.76	0.11	960.99	0.0	-449.99	-728.46	-6.43	33.36	1147.76	
4.219e+04												
		-5.412e+04	-1096.00	-0.02	0.0	174.4	-188.73	-247.96	-6.43	33.36	25.88	-
4.297e+04												
						348.8	72.54	232.53	-6.43	33.36	-1096.00	-
4.431e+04												
38	311	3.222e+04	1291.41	0.08	744.99	0.0	-346.85	-562.54	-7.42	30.91	1291.41	
3.222e+04												
		-4.186e+04	-1297.21	-0.02	0.0	174.4	-149.66	-190.04	-7.42	30.91	-2.90	-
3.341e+04												
						348.8	47.52	182.45	-7.42	30.91	-1297.21	-
3.407e+04												
38	327	3.258e+04	410.92	0.07	652.08	0.0	-303.17	-508.05	-2.31	16.74	410.92	
3.258e+04												
		-3.637e+04	-396.56	-0.01	0.0	174.4	-109.72	-182.01	-2.31	16.74	7.18	-

Viale Duca Alessandro n. 11 – 43123 Parma
Cell. 335 1403156 – E mail ing.concari@gmail.com
Sito web: studioaire.it – P.IVA 02561480340

2.760e+04												
						348.8	83.73	144.03	-2.31	16.74	-396.56	-
3.092e+04												
38	331	3.577e+04	456.10	0.08	724.08	0.0	-335.96	-562.99	-2.57	18.54	456.10	
3.577e+04												
		-4.048e+04	-440.03	-0.02	0.0	174.4	-121.15	-200.95	-2.57	18.54	8.04	-
3.085e+04												
						348.8	93.66	161.08	-2.57	18.54	-440.03	-
3.433e+04												
38	339	3.211e+04	759.88	0.07	652.08	0.0	-297.22	-506.68	-4.50	20.41	759.88	
3.211e+04												
		-3.647e+04	-811.09	-0.02	0.0	174.4	-103.77	-180.64	-4.50	20.41	-25.60	-
2.783e+04												
						348.8	89.68	145.40	-4.50	20.41	-811.09	-
3.090e+04												
38	347	3.261e+04	257.84	0.07	652.08	0.0	-290.61	-508.13	4.35	16.36	16.71	
3.261e+04												
		-3.635e+04	-849.70	-0.04	-13.66	174.4	-97.16	-182.09	-2.48	16.36	179.15	-
2.758e+04												
						348.8	96.28	143.94	-9.31	16.36	-849.70	-
3.091e+04												
39	45	2.735e+04	4563.84	0.13	-1366.10	0.0	11.48	-139.09	-47.96	5.26	4563.84	
2.735e+04												
		-2.594e+05	-1953.12	0.12	61.47	174.4	416.76	-822.14	-17.23	5.26	-1121.00	-
5.647e+04												
						348.8	822.04	-1505.19	13.51	5.26	-1445.04	-
2.594e+05												
39	77	2.125e+04	6152.08	0.11	-1042.10	0.0	-45.12	-114.27	-69.38	-0.23	6152.08	
2.125e+04												
		-2.004e+05	-2039.62	0.19	102.45	174.4	264.04	-635.32	-18.15	-0.23	-1480.77	-
4.412e+04												
						348.8	573.20	-1156.37	33.08	-0.23	-178.97	-
2.004e+05												
39	81	5649.84	5557.34	0.04	-220.08	0.0	-94.57	-44.08	-64.30	-6.87	5557.34	
5649.84												
		-4.811e+04	-1481.87	0.17	102.45	174.4	-29.28	-154.12	-13.08	-6.87	-1190.86	-
1.163e+04												
						348.8	36.01	-264.15	38.15	-6.87	995.59	-
4.811e+04												
39	141	1.657e+04	1572.40	-0.12	-1094.38	0.0	736.18	-73.66	-14.39	20.53	1572.40	
1.657e+04												
		-2.000e+05	-3447.11	0.04	0.0	174.4	1001.28	-620.85	-14.39	20.53	-937.35	-
4.400e+04												
						348.8	1266.38	-1168.04	-14.39	20.53	-3447.11	-
2.000e+05												
39	143	1.210e+04	-40.99	-0.15	-1094.38	0.0	779.99	-60.03	-6.02	23.48	-40.99	
1.210e+04												
		-1.997e+05	-2142.27	0.06	0.0	174.4	1045.10	-607.22	-6.02	23.48	-1091.63	-
4.609e+04												
						348.8	1310.20	-1154.41	-6.02	23.48	-2142.27	-
1.997e+05												
39	162	2.659e+04	3.151e+04	0.16	-652.08	0.0	-1634.01	-239.91	-112.29	-75.58	1.791e+04	
2.659e+04												
		-1.718e+05	1.791e+04	0.66	0.0	174.4	-1440.56	-565.95	-112.29	-75.58	2.471e+04	-
4.416e+04												
						348.8	-1247.11	-891.99	-112.29	-75.58	3.151e+04	-
1.718e+05												
39	163	-1171.49	-1.688e+04	-0.15	-652.08	0.0	1729.24	100.83	103.68	86.10	-1.688e+04	-
3943.62												
		-8.157e+04	-3.348e+04	-0.64	0.0	174.4	1922.69	-225.21	103.68	86.10	-2.518e+04	-
1.432e+04												
						348.8	2116.14	-551.25	103.68	86.10	-3.348e+04	-
8.157e+04												
39	182	3.431e+04	2.000e+04	0.21	-652.08	0.0	-2263.08	-312.34	-121.17	-54.99	2.000e+04	
3.431e+04												
		-1.896e+05	-6812.94	-0.41	0.0	174.4	-2069.63	-638.38	-121.17	-54.99	6591.50	-
4.920e+04												
						348.8	-1876.18	-964.42	-121.17	-54.99	-6812.94	-
1.896e+05												
39	183	-3365.77	4838.82	-0.20	-652.08	0.0	2358.31	173.26	112.57	65.51	-1.897e+04	-
1.167e+04												
		-6.375e+04	-1.897e+04	0.44	0.0	174.4	2551.76	-152.78	112.57	65.51	-7064.34	-
9278.55												
						348.8	2745.21	-478.82	112.57	65.51	4838.82	-
6.375e+04												
39	194	1.806e+04	1.336e+04	0.11	-652.08	0.0	-696.41	-144.54	-51.23	-30.26	8064.02	
1.806e+04												
		-1.465e+05	8064.02	0.30	0.0	174.4	-502.96	-470.58	-51.23	-30.26	1.071e+04	-
3.579e+04												
						348.8	-309.51	-796.62	-51.23	-30.26	1.336e+04	-
1.465e+05												
39	195	4583.30	-7035.57	-0.10	-652.08	0.0	791.64	5.46	42.62	40.79	-7035.57	
4583.30												
		-1.068e+05	-1.533e+04	0.28	0.0	174.4	985.09	-320.58	42.62	40.79	-1.118e+04	-
2.269e+04												
						348.8	1178.54	-646.62	42.62	40.79	-1.533e+04	-
1.068e+05												
39	214	2.162e+04	9435.05	0.13	-652.08	0.0	-994.48	-177.50	-57.55	-21.59	9435.05	
2.162e+04												
		-1.546e+05	-3848.15	-0.18	0.0	174.4	-801.03	-503.54	-57.55	-21.59	2793.45	-
3.805e+04												
						348.8	-607.58	-829.58	-57.55	-21.59	-3848.15	-

Viale Duca Alessandro n. 11 – 43123 Parma
Cell. 335 1403156 – E mail ing.concari@gmail.com
Sito web: studioaire.it – P.IVA 02561480340

1.546e+05												
39	215	1455.88	1874.03	-0.12	-652.08	0.0	1089.71	38.42	48.94	32.11	-8406.60	
1028.99												
		-9.877e+04	-8406.60	0.21	0.0	174.4	1283.16	-287.62	48.94	32.11	-3266.29	-
2.043e+04												
						348.8	1476.61	-613.66	48.94	32.11	1874.03	-
9.877e+04												
39	226	1.676e+04	1.059e+04	0.10	-652.08	0.0	-552.86	-130.00	-42.02	-23.37	6580.53	
1.676e+04												
		-1.427e+05	6580.53	0.24	0.0	174.4	-359.41	-456.04	-42.02	-23.37	8583.21	-
3.452e+04												
						348.8	-165.96	-782.08	-42.02	-23.37	1.059e+04	-
1.427e+05												
39	227	5886.22	-5552.08	-0.09	-652.08	0.0	648.09	-9.08	33.41	33.89	-5552.08	
5886.22												
		-1.107e+05	-1.256e+04	0.23	0.0	174.4	841.54	-335.12	33.41	33.89	-9056.04	-
2.396e+04												
						348.8	1034.99	-661.16	33.41	33.89	-1.256e+04	-
1.107e+05												
39	246	1.963e+04	7733.58	0.12	-652.08	0.0	-793.96	-156.61	-47.37	-16.40	7733.58	
1.963e+04												
		-1.492e+05	-3317.69	-0.14	0.0	174.4	-600.51	-482.65	-47.37	-16.40	2207.95	-
3.634e+04												
						348.8	-407.06	-808.69	-47.37	-16.40	-3317.69	-
1.492e+05												
39	247	3015.04	1343.57	-0.11	-652.08	0.0	889.19	17.53	38.76	26.92	-6705.13	
3015.04												
		-1.042e+05	-6705.13	0.17	0.0	174.4	1082.64	-308.51	38.76	26.92	-2680.78	-
2.214e+04												
						348.8	1276.09	-634.55	38.76	26.92	1343.57	-
1.042e+05												
39	273	1.862e+04	3070.62	0.09	-940.08	0.0	10.77	-97.46	-32.20	3.74	3070.62	
1.862e+04												
		-1.793e+05	-1337.20	0.08	40.98	174.4	289.66	-567.50	-11.71	3.74	-758.72	-
3.937e+04												
						348.8	568.55	-1037.54	8.78	3.74	-1014.19	-
1.793e+05												
39	285	4736.05	3775.05	0.03	-220.08	0.0	-55.26	-41.23	-43.43	-3.99	3775.05	
4736.05												
		-4.803e+04	-1041.03	0.12	68.30	174.4	10.03	-151.26	-9.28	-3.99	-822.37	-
1.205e+04												
						348.8	75.32	-261.30	24.87	-3.99	536.65	-
4.803e+04												
39	289	1.455e+04	4129.45	0.08	-724.08	0.0	-26.96	-80.91	-46.48	0.08	4129.45	
1.455e+04												
		-1.400e+05	-1385.93	0.12	68.30	174.4	187.85	-442.95	-12.33	0.08	-998.56	-
3.113e+04												
						348.8	402.66	-804.99	21.83	0.08	-170.14	-
1.400e+05												
39	321	1.143e+04	1076.33	-0.08	-758.93	0.0	493.90	-53.84	-9.82	13.92	1076.33	
1.143e+04												
		-1.397e+05	-2348.90	0.03	0.0	174.4	679.34	-433.31	-9.82	13.92	-636.29	-
3.105e+04												
						348.8	864.78	-812.77	-9.82	13.92	-2348.90	-
1.397e+05												
39	323	8454.01	0.73	-0.10	-758.93	0.0	523.11	-44.76	-4.24	15.89	0.73	
8454.01												
		-1.395e+05	-1479.01	0.04	0.0	174.4	708.55	-424.22	-4.24	15.89	-739.14	-
3.244e+04												
						348.8	893.99	-803.69	-4.24	15.89	-1479.01	-
1.395e+05												
39	325	2908.48	210.45	0.03	-220.08	0.0	23.36	-35.52	-1.70	1.77	210.45	
2908.48												
		-4.787e+04	-381.23	8.37e-03	0.0	174.4	88.65	-145.56	-1.70	1.77	-85.39	-
1.288e+04												
						348.8	153.94	-255.60	-1.70	1.77	-381.23	-
4.787e+04												
39	327	1.132e+04	514.22	0.06	-652.08	0.0	47.61	-69.54	-4.30	5.26	514.22	
1.132e+04												
		-1.267e+05	-987.06	0.02	0.0	174.4	241.06	-395.58	-4.30	5.26	-236.42	-
2.924e+04												
						348.8	434.51	-721.62	-4.30	5.26	-987.06	-
1.267e+05												
39	331	1.272e+04	564.85	0.07	-724.08	0.0	51.66	-75.21	-4.74	5.84	564.85	
1.272e+04												
		-1.398e+05	-1088.03	0.02	0.0	174.4	266.47	-437.25	-4.74	5.84	-261.59	-
3.197e+04												
						348.8	481.28	-799.29	-4.74	5.84	-1088.03	-
1.398e+05												
39	337	1.256e+04	962.39	0.07	-652.08	0.0	35.44	-73.33	-6.63	4.44	962.39	
1.256e+04												
		-1.267e+05	-1349.52	0.02	0.0	174.4	228.89	-399.37	-6.63	4.44	-193.56	-
2.866e+04												
						348.8	422.34	-725.41	-6.63	4.44	-1349.52	-
1.267e+05												
39	345	2975.96	815.81	0.03	-220.08	0.0	10.56	-35.76	-9.49	0.81	815.81	
2975.96												
		-4.788e+04	-333.02	0.03	13.66	174.4	75.85	-145.79	-2.66	0.81	-243.07	-
1.286e+04												
						348.8	141.14	-255.83	4.17	0.81	-110.67	-
4.788e+04												
39	347	1.139e+04	1119.58	0.06	-652.08	0.0	34.81	-69.77	-12.09	4.31	1119.58	

Viale Duca Alessandro n. 11 – 43123 Parma
Cell. 335 1403156 – E mail ing.concari@gmail.com
Sito web: studioaire.it – P.IVA 02561480340

1.139e+04												
		-1.267e+05	-747.58	0.04	13.66	174.4	228.26	-395.81	-5.26	4.31	-394.10	-
2.921e+04												
						348.8	421.71	-721.85	1.57	4.31	-716.49	-
1.267e+05												
39	351	1.077e+04	508.96	-0.07	-659.05	0.0	138.98	-64.36	-4.76	7.07	508.96	
1.077e+04												
		-1.266e+05	-1152.25	0.02	0.0	174.4	326.56	-393.88	-4.76	7.07	-321.64	-
2.920e+04												
						348.8	514.14	-723.41	-4.76	7.07	-1152.25	-
1.266e+05												
40	5	5894.92	86.54	-0.38	-397.88	0.0	-1.29	202.28	1.73	168.49	-120.50	-
273.77												
		-273.77	-120.50	-0.03	0.0	60.0	-1.29	3.34	1.73	168.49	-16.98	
5894.92												
						120.0	-1.29	-195.60	1.73	168.49	86.54	
127.21												
40	81	812.02	611.67	-0.06	-56.83	0.0	-7.53	28.85	-25.94	-4.76	611.67	-
66.50												
		-66.50	-533.26	0.01	35.24	60.0	-7.53	0.43	-8.32	-4.76	-415.95	
812.02												
						120.0	-7.53	-27.98	9.31	-4.76	-386.24	-
14.39												
40	103	5932.03	155.83	-0.34	-397.88	0.0	19.95	201.09	0.68	133.01	73.93	-
165.15												
		-165.15	73.93	-0.03	0.0	60.0	9.37	2.15	0.68	133.01	114.88	
5932.03												
						120.0	-1.20	-196.79	0.68	133.01	155.83	
92.81												
40	143	4502.03	567.96	-0.28	-300.68	0.0	31.84	151.70	-6.51	105.98	567.96	-
89.64												
		-89.64	-213.11	-0.04	0.0	60.0	14.22	1.36	-6.51	105.98	177.42	
4502.03												
						120.0	-3.41	-148.98	-6.51	105.98	-213.11	
73.31												
40	145	865.22	1196.91	-0.13	-56.83	0.0	28.35	29.07	-17.63	65.01	1196.91	-
26.78												
		-26.78	-919.00	-0.07	0.0	60.0	10.73	0.66	-17.63	65.01	138.95	
865.22												
						120.0	-6.89	-27.76	-17.63	65.01	-919.00	
52.30												
40	164	2678.97	2525.30	-0.28	-186.43	0.0	22.57	97.95	48.14	198.32	-3303.10	-
412.24												
		-412.24	-3303.10	-0.04	0.0	60.0	22.57	4.74	48.14	198.32	-388.90	
2678.97												
						120.0	22.57	-88.48	48.14	198.32	2525.30	
177.26												
40	173	2884.05	2998.38	-0.24	-186.43	0.0	26.74	92.56	-42.42	103.32	2998.38	
95.24												
		79.93	-2141.83	-0.15	0.0	60.0	26.74	-0.66	-42.42	103.32	428.27	
2884.05												
						120.0	26.74	-93.87	-42.42	103.32	-2141.83	
79.93												
40	174	2671.04	1365.46	-0.04	-186.43	0.0	-46.47	95.02	26.79	-46.18	-1874.59	-
188.54												
		-188.54	-1874.59	0.19	0.0	60.0	-46.47	1.80	26.79	-46.18	-254.56	
2671.04												
						120.0	-46.47	-91.41	26.79	-46.18	1365.46	-
62.31												
40	175	2853.30	1551.90	-0.31	-186.43	0.0	46.78	94.31	-21.38	192.02	1551.90	-
53.84												
		-53.84	-1039.96	-0.20	0.0	60.0	46.78	1.09	-21.38	192.02	255.97	
2853.30												
						120.0	46.78	-92.12	-21.38	192.02	-1039.96	
167.53												
40	176	2640.29	2467.33	-0.12	-186.43	0.0	-26.43	96.77	47.82	42.52	-3321.07	-
337.63												
		-337.63	-3321.07	0.14	0.0	60.0	-26.43	3.55	47.82	42.52	-426.87	
2640.29												
						120.0	-26.43	-89.66	47.82	42.52	2467.33	
25.29												
40	196	2725.37	1229.63	-0.22	-186.43	0.0	10.36	96.11	23.26	127.71	-1586.05	-
249.33												
		-249.33	-1586.05	-0.02	0.0	60.0	10.36	2.89	23.26	127.71	-178.21	
2725.37												
						120.0	10.36	-90.32	23.26	127.71	1229.63	
107.14												
40	201	2814.47	1290.33	-0.20	-186.43	0.0	13.45	93.72	-18.02	85.36	1290.33	-
27.59												
		-27.59	-891.75	-0.08	0.0	60.0	13.45	0.50	-18.02	85.36	199.29	
2814.47												
						120.0	13.45	-92.71	-18.02	85.36	-891.75	
63.62												
40	204	2709.87	1217.25	-0.15	-186.43	0.0	-13.14	95.61	23.42	60.47	-1613.02	-
214.79												
		-214.79	-1613.02	0.07	0.0	60.0	-13.14	2.39	23.42	60.47	-197.89	
2709.87												
						120.0	-13.14	-90.82	23.42	60.47	1217.25	
41.60												
40	205	2816.38	1289.79	-0.21	-186.43	0.0	12.59	93.74	-17.98	87.09	1289.79	-
25.39												
		-25.39	-890.42	-0.07	0.0	60.0	12.59	0.52	-17.98	87.09	199.69	

Viale Duca Alessandro n. 11 – 43123 Parma
Cell. 335 1403156 – E mail ing.concari@gmail.com
Sito web: studioaire.it – P.IVA 02561480340

2816.38
120.0 12.59 -92.69 -17.98 87.09 -890.42
65.22
40 206 2721.51 720.80 -0.12 -186.43 0.0 -21.47 94.82 13.91 19.82 -960.15 -
151.46
-151.46 -960.15 0.09 0.0 60.0 -21.47 1.61 13.91 19.82 -119.68
2721.51
120.0 -21.47 -91.61 13.91 19.82 720.80 1.55
40 207 2802.83 637.47 -0.24 -186.43 0.0 21.78 94.51 -8.51 126.02 637.47 -
90.92
-90.92 -395.30 -0.10 0.0 60.0 21.78 1.29 -8.51 126.02 121.08
2802.83
120.0 21.78 -91.92 -8.51 126.02 -395.30
103.67
40 220 2737.58 1032.83 -0.22 -186.43 0.0 6.10 95.88 19.53 121.65 -1320.11 -
218.57
-218.57 -1320.11 9.44e-03 0.0 60.0 6.10 2.67 19.53 121.65 -143.64
2737.58
120.0 6.10 -90.55 19.53 121.65 1032.83
100.80
40 228 2732.47 1027.94 -0.21 -186.43 0.0 8.45 95.83 19.38 117.01 -1317.71 -
224.49
-224.49 -1317.71 -0.02 0.0 60.0 8.45 2.61 19.38 117.01 -144.88
2732.47
120.0 8.45 -90.60 19.38 117.01 1027.94
96.50
40 236 2719.90 1020.49 -0.16 -186.43 0.0 -10.70 95.43 19.56 62.74 -1343.05 -
196.74
-196.74 -1343.05 0.06 0.0 60.0 -10.70 2.21 19.56 62.74 -161.28
2719.90
120.0 -10.70 -91.00 19.56 62.74 1020.49
43.63
40 237 2805.97 1019.64 -0.20 -186.43 0.0 10.31 93.92 -14.12 84.49 1019.64 -
43.86
-43.86 -693.52 -0.06 0.0 60.0 10.31 0.70 -14.12 84.49 163.06
2805.97
120.0 10.31 -92.51 -14.12 84.49 -693.52
62.88
40 238 2729.29 617.93 -0.13 -186.43 0.0 -17.48 94.79 11.85 29.99 -813.50 -
145.71
-145.71 -813.50 0.07 0.0 60.0 -17.48 1.58 11.85 29.99 -97.78
2729.29
120.0 -17.48 -91.64 11.85 29.99 617.93
11.36
40 239 2795.05 490.81 -0.23 -186.43 0.0 17.79 94.54 -6.45 115.85 490.81 -
96.68
-96.68 -292.43 -0.08 0.0 60.0 17.79 1.32 -6.45 115.85 99.19
2795.05
120.0 17.79 -91.89 -6.45 115.85 -292.43
93.86
40 253 4041.39 65.30 -0.26 -272.83 0.0 -0.86 138.73 1.28 116.29 -87.92 -
189.70
-189.70 -87.92 -0.02 0.0 60.0 -0.86 2.31 1.28 116.29 -11.31
4041.39
120.0 -0.86 -134.10 1.28 116.29 65.30
87.57
40 285 819.96 388.81 -0.06 -56.83 0.0 -5.01 28.91 -16.98 6.72 388.81 -
62.31
-62.31 -345.99 8.60e-03 23.50 60.0 -5.01 0.50 -5.23 6.72 -277.28
819.96
120.0 -5.01 -27.92 6.52 6.72 -238.48 -2.69
40 303 4066.13 111.49 -0.24 -272.83 0.0 13.30 137.93 0.58 92.63 41.70 -
117.29
-117.29 41.70 -0.02 0.0 60.0 6.25 1.52 0.58 92.63 76.59
4066.13
120.0 -0.80 -134.90 0.58 92.63 111.49
64.63
40 317 855.43 778.97 -0.12 -56.83 0.0 18.91 29.06 -11.44 53.23 778.97 -
35.83
-35.83 -593.66 -0.05 0.0 60.0 7.16 0.65 -11.44 53.23 92.66
855.43
120.0 -4.58 -27.77 -11.44 53.23 -593.66
41.77
40 323 3112.80 371.05 -0.20 -208.03 0.0 21.23 105.00 -4.21 74.61 371.05 -
66.95
-66.95 -134.47 -0.03 0.0 60.0 9.48 0.99 -4.21 74.61 118.29
3112.80
120.0 -2.27 -103.03 -4.21 74.61 -134.47
51.63
40 325 835.84 57.04 -0.08 -56.83 0.0 0.04 29.04 0.95 29.67 -56.91 -
53.94
-53.94 -56.91 -1.87e-03 0.0 60.0 0.04 0.62 0.95 29.67 0.06
835.84
120.0 0.04 -27.79 0.95 29.67 57.04
20.70
40 327 2762.17 162.75 -0.18 -186.43 0.0 0.16 94.66 2.70 72.92 -161.34 -
121.19
-121.19 -161.34 -4.96e-03 0.0 60.0 0.16 1.45 2.70 72.92 0.70
2762.17
120.0 0.16 -91.77 2.70 72.92 162.75
52.61
40 331 3083.23 180.37 -0.20 -208.03 0.0 0.18 105.60 2.99 80.13 -178.75 -

Viale Duca Alessandro n. 11 – 43123 Parma
Cell. 335 1403156 – E mail ing.concari@gmail.com
Sito web: studioaire.it – P.IVA 02561480340

132.40
-132.40 -178.75 -5.48e-03 0.0 60.0 0.18 1.59 2.99 80.13 0.81
3083.23
120.0 0.18 -102.43 2.99 80.13 180.37
57.93
40 333 831.68 62.29 -0.09 -56.83 0.0 -0.87 29.30 -1.21 41.79 62.29 -
73.67
-73.67 -82.90 -0.01 0.0 60.0 -0.87 0.88 -1.21 41.79 -10.31
831.68
120.0 -0.87 -27.53 -1.21 41.79 -82.90
32.10
40 337 2758.01 22.81 -0.19 -186.43 0.0 -0.75 94.92 0.54 85.03 -42.14 -
140.92
-140.92 -42.14 -0.01 0.0 60.0 -0.75 1.71 0.54 85.03 -9.67
2758.01
120.0 -0.75 -91.51 0.54 85.03 22.81
64.01
40 339 2766.33 302.69 -0.16 -186.43 0.0 1.07 94.40 4.86 60.81 -280.55 -
101.47
-101.47 -280.55 3.72e-03 0.0 60.0 1.07 1.19 4.86 60.81 11.07
2766.33
120.0 1.07 -92.03 4.86 60.81 302.69
41.21
40 351 2767.09 66.20 -0.18 -186.43 0.0 4.15 94.61 0.74 74.72 -22.78 -
112.84
-112.84 -22.78 -0.01 0.0 60.0 1.80 1.39 0.74 74.72 21.71
2767.09
120.0 -0.55 -91.82 0.74 74.72 66.20
54.09
41 47 2.023e+04 618.04 0.12 57.75 0.0 32.71 -254.68 -1.58 -52.79 618.04
2.023e+04
-91.15 475.49 -0.02 0.0 45.0 24.78 -225.80 -1.58 -52.79 546.76
9420.18
90.0 16.85 -196.93 -1.58 -52.79 475.49 -
91.15
41 79 1.599e+04 683.74 0.09 57.75 0.0 46.86 -206.96 -4.05 -6.62 683.74
1.599e+04
-36.22 319.65 -0.03 0.0 45.0 33.65 -178.08 -4.05 -6.62 501.70
7327.78
90.0 20.43 -149.21 -4.05 -6.62 319.65 -
36.22
41 101 2.005e+04 768.37 0.12 57.75 0.0 -7.09 -253.61 -20.33 -133.86 768.37
2.005e+04
-176.61 -347.95 0.04 15.86 45.0 -7.09 -224.73 -12.40 -133.86 31.79
9286.62
90.0 -7.09 -195.86 -4.47 -133.86 -347.95 -
176.61
41 143 1.590e+04 1282.99 0.09 57.75 0.0 -6.51 -206.73 -29.84 -73.31 1282.99
1.590e+04
-105.98 -213.11 0.03 26.43 45.0 -6.51 -177.86 -16.62 -73.31 237.57
7247.90
90.0 -6.51 -148.98 -3.41 -73.31 -213.11 -
105.98
41 145 4432.11 891.01 0.02 44.42 0.0 -17.63 -72.18 -33.33 -52.30 891.01
4432.11
-65.01 -919.00 0.06 26.43 45.0 -17.63 -49.97 -20.11 -52.30 -311.37
1683.79
90.0 -17.63 -27.76 -6.89 -52.30 -919.00 -
65.01
41 155 9737.58 2966.86 0.07 44.42 0.0 -72.77 -131.56 17.59 -232.08 2966.86
9737.58
-256.26 1466.82 0.15 0.0 45.0 -72.77 -109.35 17.59 -232.08 2216.84
4240.90
90.0 -72.77 -87.14 17.59 -232.08 1466.82 -
256.26
41 162 1.045e+04 1294.01 0.05 44.42 0.0 98.00 -138.72 -17.93 114.72 1294.01
1.045e+04
97.33 -1147.61 -0.18 0.0 45.0 98.00 -116.51 -17.93 114.72 73.20
4771.75
90.0 98.00 -94.30 -17.93 114.72 -1147.61
97.33
41 163 9924.62 1473.11 0.06 44.42 0.0 -92.60 -133.66 18.24 -219.94 -996.56
9924.62
-243.17 -996.56 0.18 0.0 45.0 -92.60 -111.45 18.24 -219.94 238.28
4340.97
90.0 -92.60 -89.24 18.24 -219.94 1473.11 -
243.17
41 173 1.151e+04 3886.26 0.05 44.42 0.0 -46.74 -151.16 -54.07 -79.93 3886.26
1.151e+04
-103.32 -2141.83 0.09 0.0 45.0 -46.74 -128.95 -54.07 -79.93 872.22
5205.77
90.0 -46.74 -106.73 -54.07 -79.93 -2141.83 -
103.32
41 176 8855.94 2467.33 0.07 44.42 0.0 52.14 -121.22 54.38 -25.29 -3588.81
8855.94
-42.52 -3588.81 -0.09 0.0 45.0 52.14 -99.01 54.38 -25.29 -560.74
3906.95
90.0 52.14 -76.80 54.38 -25.29 2467.33 -
42.52
41 177 1.164e+04 1153.78 0.05 44.42 0.0 -14.51 -152.49 -24.24 -41.04 1153.78
1.164e+04
-64.78 -1603.92 0.05 0.0 45.0 -14.51 -130.28 -24.24 -41.04 -225.07

Viale Duca Alessandro n. 11 – 43123 Parma
Cell. 335 1403156 – E mail ing.concari@gmail.com
Sito web: studioaire.it – P.IVA 02561480340

5287.56
90.0 -14.51 -108.07 -24.24 -41.04 -1603.92 -
64.78
41 187 9980.28 1440.91 0.06 44.42 0.0 -32.15 -134.06 8.13 -131.57 1440.91
9980.28
-153.64 750.68 0.07 0.0 45.0 -32.15 -111.85 8.13 -131.57 1095.80
4413.56
90.0 -32.15 -89.64 8.13 -131.57 750.68 -
153.64
41 194 1.030e+04 663.54 0.06 44.42 0.0 46.79 -137.35 -8.09 21.02 663.54
1.030e+04
2.05 -420.76 -0.08 0.0 45.0 46.79 -115.14 -8.09 21.02 121.39
4652.94
90.0 46.79 -92.92 -8.09 21.02 -420.76 2.05
41 195 1.007e+04 746.26 0.06 44.42 0.0 -41.39 -135.03 8.40 -126.24 -366.09
1.007e+04
-147.89 -366.09 0.08 0.0 45.0 -41.39 -112.82 8.40 -126.24 190.09
4459.78
90.0 -41.39 -90.61 8.40 -126.24 746.26 -
147.89
41 205 1.080e+04 1883.72 0.06 44.42 0.0 -20.37 -143.11 -25.09 -65.22 1883.72
1.080e+04
-87.09 -890.42 0.04 0.0 45.0 -20.37 -120.90 -25.09 -65.22 496.65
4856.15
90.0 -20.37 -98.69 -25.09 -65.22 -890.42 -
87.09
41 208 9571.40 1215.92 0.06 44.42 0.0 25.77 -129.27 25.40 -40.00 -1586.27
9571.40
-58.75 -1586.27 -0.04 0.0 45.0 25.77 -107.06 25.40 -40.00 -185.17
4256.57
90.0 25.77 -84.85 25.40 -40.00 1215.92 -
58.75
41 209 1.086e+04 622.01 0.05 44.42 0.0 -5.37 -143.72 -11.14 -48.33 622.01
1.086e+04
-70.41 -647.55 0.02 0.0 45.0 -5.37 -121.51 -11.14 -48.33 -12.77
4893.14
90.0 -5.37 -99.30 -11.14 -48.33 -647.55 -
70.41
41 219 1.002e+04 1200.12 0.06 44.42 0.0 -25.69 -134.45 6.64 -116.26 1200.12
1.002e+04
-138.00 639.40 0.06 0.0 45.0 -25.69 -112.24 6.64 -116.26 919.76
4440.49
90.0 -25.69 -90.03 6.64 -116.26 639.40 -
138.00
41 226 1.028e+04 565.95 0.06 44.42 0.0 38.64 -137.13 -6.55 6.74 565.95
1.028e+04
-12.48 -309.01 -0.07 0.0 45.0 38.64 -114.92 -6.55 6.74 128.47
4634.56
90.0 38.64 -92.71 -6.55 6.74 -309.01 -
12.48
41 227 1.009e+04 634.51 0.06 44.42 0.0 -33.23 -135.25 6.86 -111.96 -268.50
1.009e+04
-133.36 -268.50 0.07 0.0 45.0 -33.23 -113.04 6.86 -111.96 183.00
4478.16
90.0 -33.23 -90.83 6.86 -111.96 634.51 -
133.36
41 237 1.069e+04 1563.83 0.06 44.42 0.0 -16.13 -141.83 -20.45 -62.88 1563.83
1.069e+04
-84.49 -693.52 0.04 0.0 45.0 -16.13 -119.62 -20.45 -62.88 435.16
4800.65
90.0 -16.13 -97.41 -20.45 -62.88 -693.52 -
84.49
41 240 9685.00 1019.02 0.06 44.42 0.0 21.53 -130.55 20.76 -42.34 -1266.38
9685.00
-61.35 -1266.38 -0.03 0.0 45.0 21.53 -108.34 20.76 -42.34 -123.68
4312.07
90.0 21.53 -86.13 20.76 -42.34 1019.02 -
61.35
41 241 1.073e+04 532.66 0.06 44.42 0.0 -3.88 -142.32 -9.04 -49.25 532.66
1.073e+04
-71.00 -496.02 0.02 0.0 45.0 -3.88 -120.11 -9.04 -49.25 18.32
4830.48
90.0 -3.88 -97.90 -9.04 -49.25 -496.02 -
71.00
41 275 1.408e+04 419.15 0.08 44.42 0.0 21.93 -179.41 -1.05 -37.96 419.15
1.408e+04
-64.72 324.60 -0.02 0.0 45.0 16.64 -157.20 -1.05 -37.96 371.87
6509.56
90.0 11.36 -134.99 -1.05 -37.96 324.60 -
64.72
41 291 1.126e+04 462.96 0.06 44.42 0.0 31.37 -147.60 -2.69 -7.17 462.96
1.126e+04
-28.10 220.70 -0.02 0.0 45.0 22.56 -125.39 -2.69 -7.17 341.83
5114.63
90.0 13.75 -103.18 -2.69 -7.17 220.70 -
28.10
41 301 1.396e+04 519.37 0.08 44.42 0.0 -4.60 -178.70 -13.55 -92.00 519.37
1.396e+04
-121.70 -224.36 0.03 10.57 45.0 -4.60 -156.49 -8.26 -92.00 28.56
6420.52
90.0 -4.60 -134.28 -2.98 -92.00 -224.36 -
121.70

Viale Duca Alessandro n. 11 – 43123 Parma
Cell. 335 1403156 – E mail ing.concari@gmail.com
Sito web: studioaire.it – P.IVA 02561480340

41	317	4445.00	611.82	0.02	44.42	0.0	-11.44	-72.19	-22.21	-41.77	611.82	4445.00
		-53.23	-593.66	0.04	17.62	45.0	-11.44	-49.98	-13.39	-41.77	-189.17	1696.12
						90.0	-11.44	-27.77	-4.58	-41.77	-593.66	-53.23
41	323	1.120e+04	862.45	0.07	44.42	0.0	-4.21	-147.45	-19.89	-51.63	862.45	1.120e+04
		-74.61	-134.47	0.02	17.62	45.0	-4.21	-125.24	-11.08	-51.63	165.74	5061.37
						90.0	-4.21	-103.03	-2.27	-51.63	-134.47	-74.61
41	325	4470.78	57.04	0.02	44.42	0.0	0.95	-72.22	0.04	-20.70	53.45	4470.78
		-29.67	53.45	6.03e-04	0.0	45.0	0.95	-50.00	0.04	-20.70	55.24	1720.79
						90.0	0.95	-27.79	0.04	-20.70	57.04	-29.67
41	327	1.019e+04	162.75	0.06	44.42	0.0	2.70	-136.19	0.16	-52.61	148.73	1.019e+04
		-72.92	148.73	1.45e-03	0.0	45.0	2.70	-113.98	0.16	-52.61	155.74	4556.36
						90.0	2.70	-91.77	0.16	-52.61	162.75	-72.92
41	331	1.114e+04	180.37	0.07	44.42	0.0	2.99	-146.85	0.18	-57.93	164.61	1.114e+04
		-80.13	164.61	1.59e-03	0.0	45.0	2.99	-124.64	0.18	-57.93	172.49	5028.95
						90.0	2.99	-102.43	0.18	-57.93	180.37	-80.13
41	333	4435.31	-4.67	0.02	44.42	0.0	-1.21	-71.96	-0.87	-32.10	-4.67	4435.31
		-41.79	-82.90	8.93e-03	0.0	45.0	-1.21	-49.75	-0.87	-32.10	-43.78	1697.00
						90.0	-1.21	-27.53	-0.87	-32.10	-82.90	-41.79
41	337	1.015e+04	90.61	0.06	44.42	0.0	0.54	-135.93	-0.75	-64.01	90.61	1.015e+04
		-85.03	22.81	9.77e-03	0.0	45.0	0.54	-113.72	-0.75	-64.01	56.71	4532.57
						90.0	0.54	-91.51	-0.75	-64.01	22.81	-85.03
41	339	1.022e+04	302.69	0.06	44.42	0.0	4.86	-136.45	1.07	-41.21	206.84	1.022e+04
		-60.81	206.84	-6.88e-03	0.0	45.0	4.86	-114.24	1.07	-41.21	254.76	4580.14
						90.0	4.86	-92.03	1.07	-41.21	302.69	-60.81
41	347	1.020e+04	194.45	0.06	44.42	0.0	7.86	-136.28	-0.64	-45.20	194.45	1.020e+04
		-65.42	137.23	-1.13e-03	0.0	45.0	6.10	-114.07	-0.64	-45.20	165.84	4567.78
						90.0	4.33	-91.85	-0.64	-45.20	137.23	-65.42
42	21	6.148e+04	793.60	-1.51e-04	-3.41	0.0	-81.19	570.75	108.61	-264.77	-292.45	5.579e+04
		5.579e+04	-292.45	-2.87e-03	0.0	5.0	-81.19	569.05	108.61	-264.77	250.58	5.864e+04
						10.0	-81.19	567.34	108.61	-264.77	793.60	6.148e+04
42	45	7.398e+04	-1641.39	6.05e-04	-3.41	0.0	-172.98	554.89	58.62	-322.86	-2227.60	6.845e+04
		6.845e+04	-2227.60	5.52e-05	0.0	5.0	-173.86	553.18	58.62	-322.86	-1934.49	7.122e+04
						10.0	-174.74	551.48	58.62	-322.86	-1641.39	7.398e+04
42	47	6.234e+04	-1661.37	5.28e-04	-3.41	0.0	-250.69	534.75	-51.24	-294.06	-1661.37	5.701e+04
		5.701e+04	-2173.80	3.84e-03	0.0	5.0	-251.58	533.04	-51.24	-294.06	-1917.59	5.968e+04
						10.0	-252.46	531.34	-51.24	-294.06	-2173.80	6.234e+04
42	121	5160.78	-717.50	8.54e-05	-2.62	0.0	63.66	119.44	-207.25	-92.88	-717.50	3979.49
		3979.49	-2798.80	-2.00e-03	-1.76	5.0	63.66	118.13	-208.13	-92.88	-1755.95	4573.41
						10.0	63.66	116.82	-209.01	-92.88	-2798.80	5160.78
42	147	-2.138e+04	-141.77	5.36e-05	-2.62	0.0	-17.38	73.21	-555.94	-62.27	-141.77	-2.210e+04
		-2.210e+04	-5715.85	3.87e-03	-2.94	5.0	-17.38	71.90	-557.41	-62.27	-2925.14	-2.174e+04
						10.0	-17.38	70.59	-558.88	-62.27	-5715.85	-2.138e+04
42	173	-3.224e+04	8081.27	7.54e-04	-2.62	0.0	33.41	-515.22	-1740.80	-218.89	8081.27	-3.228e+04
		-3.228e+04	-3.017e+04	0.01	0.0	5.0	33.41	-516.53	-1740.80	-218.89	-1.104e+04	-3.226e+04
						10.0	33.41	-517.84	-1740.80	-218.89	-3.017e+04	-3.224e+04
42	176	9.758e+04	3.060e+04	-8.95e-04	-2.62	0.0	-218.21	1216.07	1762.60	-85.68	-7864.30	9.064e+04

Viale Duca Alessandro n. 11 – 43123 Parma
Cell. 335 1403156 – E mail ing.concari@gmail.com
Sito web: studioaire.it – P.IVA 02561480340

		9.064e+04	-7864.30	-0.01	0.0	5.0	-218.21	1214.76	1762.60	-85.68	1.137e+04	9.411e+04
						10.0	-218.21	1213.45	1762.60	-85.68	3.060e+04	9.758e+04
42	178	1.279e+05	1.669e+04	-2.78e-04	-2.62	0.0	-315.68	638.06	1810.20	-54.40	-827.71	1.235e+05
		1.235e+05	-827.71	-0.02	0.0	5.0	-315.68	636.75	1810.20	-54.40	7931.84	1.257e+05
						10.0	-315.68	635.43	1810.20	-54.40	1.669e+04	1.279e+05
42	179	-6.261e+04	1044.68	-1.24e-04	-2.62	0.0	130.88	62.80	-1788.40	-250.17	1044.68	-6.518e+04
		-6.518e+04	-1.626e+04	0.02	0.0	5.0	130.88	61.48	-1788.40	-250.17	-7605.84	-6.389e+04
						10.0	130.88	60.17	-1788.40	-250.17	-1.626e+04	-6.261e+04
42	182	1.307e+05	1.486e+04	-4.47e-04	-2.62	0.0	-314.17	660.02	1852.38	-51.45	-2570.16	1.256e+05
		1.256e+05	-2570.16	-0.02	0.0	5.0	-314.17	658.71	1852.38	-51.45	6145.79	1.282e+05
						10.0	-314.17	657.40	1852.38	-51.45	1.486e+04	1.307e+05
42	183	-6.541e+04	2787.13	2.35e-04	-2.62	0.0	129.37	40.83	-1830.57	-253.13	2787.13	-6.722e+04
		-6.722e+04	-1.443e+04	0.02	0.0	5.0	129.37	39.52	-1830.57	-253.13	-5819.79	-6.631e+04
						10.0	129.37	38.21	-1830.57	-253.13	-1.443e+04	-6.541e+04
42	205	2577.31	3657.30	3.49e-04	-2.62	0.0	-33.62	-40.41	-806.47	-182.57	3657.30	767.67
		767.67	-1.364e+04	5.89e-03	0.0	5.0	-33.62	-41.72	-806.47	-182.57	-4989.51	1675.76
						10.0	-33.62	-43.03	-806.47	-182.57	-1.364e+04	2577.31
42	208	6.276e+04	1.407e+04	-4.90e-04	-2.62	0.0	-151.18	741.26	828.28	-122.00	-3440.32	5.759e+04
		5.759e+04	-3440.32	-5.47e-03	0.0	5.0	-151.18	739.95	828.28	-122.00	5315.50	6.018e+04
						10.0	-151.18	738.64	828.28	-122.00	1.407e+04	6.276e+04
42	210	7.629e+04	8021.79	-2.30e-04	-2.62	0.0	-194.36	491.96	855.13	-108.71	-276.45	7.218e+04
		7.218e+04	-276.45	-6.89e-03	0.0	5.0	-194.36	490.65	855.13	-108.71	3872.67	7.424e+04
						10.0	-194.36	489.34	855.13	-108.71	8021.79	7.629e+04
42	211	-1.095e+04	493.43	2.11e-05	-2.62	0.0	9.56	208.89	-833.33	-195.87	493.43	-1.382e+04
		-1.382e+04	-7586.76	7.31e-03	0.0	5.0	9.56	207.58	-833.33	-195.87	-3546.67	-1.238e+04
						10.0	9.56	206.27	-833.33	-195.87	-7586.76	-1.095e+04
42	214	7.751e+04	7221.92	-3.13e-04	-2.62	0.0	-193.69	501.57	873.15	-107.42	-1041.49	7.307e+04
		7.307e+04	-1041.49	-6.82e-03	0.0	5.0	-193.69	500.26	873.15	-107.42	3090.22	7.529e+04
						10.0	-193.69	498.95	873.15	-107.42	7221.92	7.751e+04
42	215	-1.217e+04	1258.46	1.12e-04	-2.62	0.0	8.90	199.28	-851.34	-197.16	1258.46	-1.471e+04
		-1.471e+04	-6786.90	7.24e-03	0.0	5.0	8.90	197.97	-851.34	-197.16	-2764.22	-1.344e+04
						10.0	8.90	196.66	-851.34	-197.16	-6786.90	-1.217e+04
42	237	8134.03	2976.65	2.78e-04	-2.62	0.0	-44.39	33.56	-656.41	-176.88	2976.65	6027.94
		6027.94	-1.104e+04	4.83e-03	0.0	5.0	-44.39	32.25	-656.41	-176.88	-4030.64	7084.26
						10.0	-44.39	30.94	-656.41	-176.88	-1.104e+04	8134.03
42	240	5.721e+04	1.147e+04	-4.20e-04	-2.62	0.0	-140.40	667.29	678.22	-127.70	-2759.67	5.233e+04
		5.233e+04	-2759.67	-4.41e-03	0.0	5.0	-140.40	665.98	678.22	-127.70	4356.64	5.477e+04
						10.0	-140.40	664.67	678.22	-127.70	1.147e+04	5.721e+04
42	242	6.796e+04	6554.03	-2.12e-04	-2.62	0.0	-174.86	465.78	695.64	-117.12	-197.42	6.395e+04
		6.395e+04	-197.42	-5.53e-03	0.0	5.0	-174.86	464.47	695.64	-117.12	3178.30	6.596e+04
						10.0	-174.86	463.16	695.64	-117.12	6554.03	6.796e+04
42	243	-2615.40	414.40	-1.49e-05	-2.62	0.0	-9.93	235.07	-673.83	-187.46	414.40	-5590.94
		-5590.94	-6119.01	5.95e-03	0.0	5.0	-9.93	233.76	-673.83	-187.46	-2852.31	-4099.89
						10.0	-9.93	232.45	-673.83	-187.46	-6119.01	-2615.40
42	246	6.894e+04	5910.28	-2.78e-04	-2.62	0.0	-174.33	473.51	710.06	-116.08	-813.76	6.467e+04
		6.467e+04	-813.76	-5.47e-03	0.0	5.0	-174.33	472.20	710.06	-116.08	2548.26	6.681e+04

Viale Duca Alessandro n. 11 – 43123 Parma
Cell. 335 1403156 – E mail ing.concari@gmail.com
Sito web: studioaire.it – P.IVA 02561480340

						10.0	-174.33	470.89	710.06	-116.08	5910.28	6.894e+04
42	247	-3597.63	1030.73	8.41e-05	-2.62	0.0	-10.47	227.34	-688.25	-188.50	1030.73	-6308.88
		-6308.88	-5475.26	5.89e-03	0.0	5.0	-10.47	226.03	-688.25	-188.50	-2222.26	-4949.98
						10.0	-10.47	224.72	-688.25	-188.50	-5475.26	-3597.63
42	261	4.259e+04	538.17	-1.06e-04	-2.62	0.0	-58.79	398.06	73.00	-184.14	-191.87	3.862e+04
		3.862e+04	-191.87	-1.90e-03	0.0	5.0	-58.79	396.75	73.00	-184.14	173.15	4.061e+04
						10.0	-58.79	395.44	73.00	-184.14	538.17	4.259e+04
42	273	5.092e+04	-1085.16	4.00e-04	-2.62	0.0	-119.98	387.49	39.68	-222.86	-1481.97	4.706e+04
		4.706e+04	-1481.97	4.15e-05	0.0	5.0	-120.57	386.18	39.68	-222.86	-1283.56	4.899e+04
						10.0	-121.16	384.86	39.68	-222.86	-1085.16	5.092e+04
42	275	4.316e+04	-1104.49	3.48e-04	-2.62	0.0	-171.79	374.06	-33.56	-203.66	-1104.49	3.943e+04
		3.943e+04	-1440.10	2.57e-03	0.0	5.0	-172.38	372.75	-33.56	-203.66	-1272.29	4.130e+04
						10.0	-172.97	371.44	-33.56	-203.66	-1440.10	4.316e+04
42	305	7435.37	-470.60	4.84e-05	-2.62	0.0	30.78	123.53	-136.66	-80.98	-470.60	6213.15
		6213.15	-1843.11	-1.31e-03	-1.17	5.0	30.78	122.22	-137.25	-80.98	-1155.39	6827.54
						10.0	30.78	120.91	-137.84	-80.98	-1843.11	7435.37
42	319	-1.026e+04	-86.78	2.33e-05	-2.62	0.0	-23.25	92.72	-369.12	-60.57	-86.78	-1.117e+04
		-1.117e+04	-3787.81	2.61e-03	-1.96	5.0	-23.25	91.41	-370.10	-60.57	-1934.85	-1.071e+04
						10.0	-23.25	90.09	-371.08	-60.57	-3787.81	-1.026e+04
42	325	1.198e+04	68.27	-3.90e-05	-2.62	0.0	-34.98	131.72	4.51	-57.19	23.21	1.068e+04
		1.068e+04	23.21	7.33e-05	0.0	5.0	-34.98	130.41	4.51	-57.19	45.74	1.134e+04
						10.0	-34.98	129.10	4.51	-57.19	68.27	1.198e+04
42	327	3.267e+04	217.51	-1.06e-04	-2.62	0.0	-92.40	350.43	10.90	-152.29	108.49	2.918e+04
		2.918e+04	108.49	2.10e-04	0.0	5.0	-92.40	349.12	10.90	-152.29	163.00	3.093e+04
						10.0	-92.40	347.80	10.90	-152.29	217.51	3.267e+04
42	331	3.612e+04	242.39	-1.18e-04	-2.62	0.0	-101.97	386.88	11.97	-168.14	122.70	3.226e+04
		3.226e+04	122.70	2.32e-04	0.0	5.0	-101.97	385.57	11.97	-168.14	182.54	3.419e+04
						10.0	-101.97	384.26	11.97	-168.14	242.39	3.612e+04
42	333	1.522e+04	216.16	-3.34e-05	-2.62	0.0	-13.40	137.31	35.02	-65.19	-134.07	1.386e+04
		1.386e+04	-134.07	-9.94e-04	0.0	5.0	-13.40	136.00	35.02	-65.19	41.04	1.454e+04
						10.0	-13.40	134.69	35.02	-65.19	216.16	1.522e+04
42	337	3.590e+04	365.40	-9.97e-05	-2.62	0.0	-70.81	356.02	41.42	-160.29	-48.80	3.236e+04
		3.236e+04	-48.80	-8.58e-04	0.0	5.0	-70.81	354.71	41.42	-160.29	158.30	3.413e+04
						10.0	-70.81	353.40	41.42	-160.29	365.40	3.590e+04
42	339	2.944e+04	265.77	-1.15e-04	-2.62	0.0	-113.99	344.83	-19.62	-144.29	265.77	2.600e+04
		2.600e+04	69.62	1.28e-03	0.0	5.0	-113.99	343.52	-19.62	-144.29	167.69	2.772e+04
						10.0	-113.99	342.21	-19.62	-144.29	69.62	2.944e+04
42	349	8311.98	-36.53	-2.52e-05	-2.62	0.0	-27.45	125.26	-62.90	-59.79	-36.53	7072.47
		7072.47	-667.45	3.24e-04	-0.39	5.0	-27.45	123.95	-63.09	-59.79	-351.50	7695.50
						10.0	-27.45	122.64	-63.29	-59.79	-667.45	8311.98
43	5	-168.49	-16.92	0.02	-48.07	0.0	-1.73	250.35	-1.29	-273.77	-16.92	-1.827e+04
		-1.827e+04	-120.50	-0.02	0.0	40.0	-1.73	226.32	-1.29	-273.77	-68.71	-8740.43
						80.0	-1.73	202.28	-1.29	-273.77	-120.50	-168.49
43	23	-77.92	-614.35	-0.03	-48.07	0.0	-10.78	199.88	2.98	-128.63	-852.93	-1.415e+04
		-1.415e+04	-852.93	0.02	0.0	40.0	-10.78	175.85	2.98	-128.63	-733.64	-6631.26
						80.0	-10.78	151.82	2.98	-128.63	-614.35	-77.92

Viale Duca Alessandro n. 11 – 43123 Parma
Cell. 335 1403156 – E mail ing.concari@gmail.com
Sito web: studioaire.it – P.IVA 02561480340

43 81 4.76 1214.33 -0.02 -36.98 0.0 49.43 65.82 -7.53 -66.50 1214.33 -
3782.22
-3782.22 611.67 4.04e-03 0.0 40.0 37.69 47.34 -7.53 -66.50 913.00 -
1518.98
80.0 25.94 28.85 -7.53 -66.50 611.67 4.76
43 83 48.37 523.37 -0.06 -36.98 0.0 41.66 64.89 -4.26 4.52 523.37 -
3663.90
-3663.90 182.54 0.03 0.0 40.0 29.91 46.40 -4.26 4.52 352.95 -
1438.02
80.0 18.16 27.92 -4.26 4.52 182.54
48.37
43 143 -105.98 567.96 -5.15e-03 -48.07 0.0 6.51 199.77 55.33 -89.64 -2918.85 -
1.416e+04
-1.416e+04 -2918.85 -0.03 -23.50 40.0 6.51 175.73 43.59 -89.64 -940.49 -
6654.58
80.0 6.51 151.70 31.84 -89.64 567.96 -
105.98
43 153 65.57 2972.70 -0.09 -36.98 0.0 67.64 119.04 -42.45 153.16 1755.60 -
8236.20
-8236.20 1755.60 0.06 0.0 40.0 67.64 100.55 -42.45 153.16 2364.15 -
3715.56
80.0 67.64 82.07 -42.45 153.16 2972.70
65.57
43 154 110.42 6043.55 -0.13 -36.98 0.0 45.81 123.69 -110.63 68.02 6043.55 -
8575.99
-8575.99 1510.81 0.13 0.0 40.0 45.81 105.21 -110.63 68.02 3777.18 -
3863.03
80.0 45.81 86.72 -110.63 68.02 1510.81
110.42
43 156 -211.41 -2103.23 0.09 -36.98 0.0 -73.04 144.24 42.76 -395.54 -2103.23 -
1.001e+04
-1.001e+04 -3295.39 -0.06 0.0 40.0 -73.04 125.75 42.76 -395.54 -2699.31 -
4742.88
80.0 -73.04 107.26 42.76 -395.54 -3295.39 -
211.41
43 164 -198.32 -3303.10 0.08 -36.98 0.0 -68.50 144.06 55.38 -412.24 -3348.18 -
1.002e+04
-1.002e+04 -3348.18 -0.09 0.0 40.0 -68.50 125.57 55.38 -412.24 -3325.64 -
4737.72
80.0 -68.50 107.08 55.38 -412.24 -3303.10 -
198.32
43 174 46.18 8568.27 -0.09 -36.98 0.0 -22.63 136.36 -140.26 -188.54 8568.27 -
9474.84
-9474.84 -1874.59 0.16 0.0 40.0 -22.63 117.88 -140.26 -188.54 3346.84 -
4344.58
80.0 -22.63 99.39 -140.26 -188.54 -1874.59
46.18
43 175 -192.02 1551.90 0.09 -36.98 0.0 17.22 126.91 140.57 -53.84 -8915.89 -
8775.22
-8775.22 -8915.89 -0.16 0.0 40.0 17.22 108.43 140.57 -53.84 -3682.00 -
4113.86
80.0 17.22 89.94 140.57 -53.84 1551.90 -
192.02
43 185 -12.38 1265.14 -0.04 -36.98 0.0 29.20 125.94 -19.14 -0.41 705.14 -
8720.49
-8720.49 705.14 0.02 0.0 40.0 29.20 107.45 -19.14 -0.41 985.14 -
3996.68
80.0 29.20 88.96 -19.14 -0.41 1265.14 -
12.38
43 186 7.81 2705.41 -0.06 -36.98 0.0 19.17 128.10 -50.92 -38.23 2705.41 -
8878.66
-8878.66 590.16 0.06 0.0 40.0 19.17 109.61 -50.92 -38.23 1647.79 -
4065.67
80.0 19.17 91.13 -50.92 -38.23 590.16 7.81
43 188 -133.46 -1052.76 0.04 -36.98 0.0 -34.60 137.34 19.45 -241.98 -1052.76 -
9529.57
-9529.57 -1587.83 -0.03 0.0 40.0 -34.60 118.85 19.45 -241.98 -1320.30 -
4461.76
80.0 -34.60 100.36 19.45 -241.98 -1587.83 -
133.46
43 196 -127.71 -1586.05 0.04 -36.98 0.0 -32.49 137.27 25.36 -249.33 -1633.71 -
9531.19
-9531.19 -1633.71 -0.04 0.0 40.0 -32.49 118.78 25.36 -249.33 -1609.88 -
4459.70
80.0 -32.49 100.29 25.36 -249.33 -1586.05 -
127.71
43 206 -19.82 3897.99 -0.04 -36.98 0.0 -11.99 133.88 -65.14 -151.46 3897.99 -
9290.51
-9290.51 -960.15 0.07 0.0 40.0 -11.99 115.39 -65.14 -151.46 1468.92 -
4285.42
80.0 -11.99 96.90 -65.14 -151.46 -960.15 -
19.82
43 207 -126.02 637.47 0.04 -36.98 0.0 6.59 129.40 65.46 -90.92 -4245.61 -
8959.54
-8959.54 -4245.61 -0.08 0.0 40.0 6.59 110.91 65.46 -90.92 -1804.07 -
4173.03
80.0 6.59 92.43 65.46 -90.92 637.47 -
126.02
43 217 -24.19 997.42 -0.03 -36.98 0.0 23.20 127.01 -15.50 -23.82 540.52 -
8796.34
-8796.34 540.52 0.02 0.0 40.0 23.20 108.53 -15.50 -23.82 768.97 -
4040.52

Viale Duca Alessandro n. 11 – 43123 Parma
Cell. 335 1403156 – E mail ing.concari@gmail.com
Sito web: studioaire.it – P.IVA 02561480340

						80.0	23.20	90.04	-15.50	-23.82	997.42	-
24.19												
43	218	-7.84	2173.51	-0.04	-36.98	0.0	15.03	128.78	-41.44	-54.37	2173.51	-
8925.42												
		-8925.42	447.48	0.05	0.0	40.0	15.03	110.29	-41.44	-54.37	1310.49	-
4096.88												
						80.0	15.03	91.80	-41.44	-54.37	447.48	-7.84
43	220	-121.65	-888.14	0.03	-36.98	0.0	-28.60	136.26	15.81	-218.57	-888.14	-
9453.71												
		-9453.71	-1320.11	-0.02	0.0	40.0	-28.60	117.78	15.81	-218.57	-1104.12	-
4417.93												
						80.0	-28.60	99.29	15.81	-218.57	-1320.11	-
121.65												
43	228	-117.01	-1317.71	0.03	-36.98	0.0	-26.87	136.21	20.65	-224.49	-1362.42	-
9455.11												
		-9455.11	-1362.42	-0.03	0.0	40.0	-26.87	117.72	20.65	-224.49	-1340.06	-
4416.31												
						80.0	-26.87	99.23	20.65	-224.49	-1317.71	-
117.01												
43	238	-29.99	3149.37	-0.03	-36.98	0.0	-10.28	133.47	-53.12	-145.71	3149.37	-
9260.49												
		-9260.49	-813.50	0.06	0.0	40.0	-10.28	114.98	-53.12	-145.71	1167.94	-
4275.49												
						80.0	-10.28	96.50	-53.12	-145.71	-813.50	-
29.99												
43	239	-115.85	490.81	0.03	-36.98	0.0	4.88	129.81	53.43	-96.68	-3497.00	-
8989.57												
		-8989.57	-3497.00	-0.06	0.0	40.0	4.88	111.32	53.43	-96.68	-1503.10	-
4182.96												
						80.0	4.88	92.83	53.43	-96.68	490.81	-
115.85												
43	253	-116.29	-19.29	0.01	-36.98	0.0	-1.28	175.70	-0.86	-189.70	-19.29	-
1.269e+04												
		-1.269e+04	-87.92	-0.01	0.0	40.0	-1.28	157.21	-0.86	-189.70	-53.61	-
6035.08												
						80.0	-1.28	138.73	-0.86	-189.70	-87.92	-
116.29												
43	263	-55.90	-417.15	-0.02	-36.98	0.0	-7.31	142.06	1.99	-92.95	-576.63	-
9941.52												
		-9941.52	-576.63	0.01	0.0	40.0	-7.31	123.57	1.99	-92.95	-496.89	-
4628.96												
						80.0	-7.31	105.08	1.99	-92.95	-417.15	-
55.90												
43	285	-6.72	789.52	-0.02	-36.98	0.0	32.64	65.89	-5.01	-62.31	789.52	-
3798.70												
		-3798.70	388.81	2.50e-03	0.0	40.0	24.81	47.40	-5.01	-62.31	589.16	-
1532.96												
						80.0	16.98	28.91	-5.01	-62.31	388.81	-6.72
43	287	22.35	328.88	-0.04	-36.98	0.0	27.46	65.26	-2.83	-14.97	328.88	-
3719.83												
		-3719.83	102.72	0.02	0.0	40.0	19.62	46.78	-2.83	-14.97	215.80	-
1478.98												
						80.0	11.79	28.29	-2.83	-14.97	102.72	
22.35												
43	323	-74.61	371.05	-3.41e-03	-36.98	0.0	4.21	141.98	36.89	-66.95	-1953.92	-
9953.91												
		-9953.91	-1953.92	-0.02	-15.66	40.0	4.21	123.49	29.06	-66.95	-634.79	-
4644.51												
						80.0	4.21	105.00	21.23	-66.95	371.05	-
74.61												
43	325	-29.67	-56.91	3.04e-04	-36.98	0.0	-0.95	66.01	0.04	-53.94	-60.11	-
3831.67												
		-3831.67	-60.11	-5.95e-04	0.0	40.0	-0.95	47.52	0.04	-53.94	-58.51	-
1560.92												
						80.0	-0.95	29.04	0.04	-53.94	-56.91	-
29.67												
43	327	-72.92	-161.34	1.09e-03	-36.98	0.0	-2.70	131.64	0.16	-121.19	-173.81	-
9125.03												
		-9125.03	-173.81	-1.46e-03	0.0	40.0	-2.70	113.15	0.16	-121.19	-167.58	-
4229.22												
						80.0	-2.70	94.66	0.16	-121.19	-161.34	-
72.92												
43	331	-80.13	-178.75	1.23e-03	-36.98	0.0	-2.99	142.58	0.18	-132.40	-192.76	-
1.001e+04												
		-1.001e+04	-192.76	-1.60e-03	0.0	40.0	-2.99	124.09	0.18	-132.40	-185.76	-
4673.94												
						80.0	-2.99	105.60	0.18	-132.40	-178.75	-
80.13												
43	333	-41.79	131.83	9.30e-03	-36.98	0.0	1.21	66.27	-0.87	-73.67	131.83	-
3864.54												
		-3864.54	62.29	-7.83e-03	0.0	40.0	1.21	47.78	-0.87	-73.67	97.06	-
1583.41												
						80.0	1.21	29.30	-0.87	-73.67	62.29	-
41.79												
43	335	-17.56	-176.11	-8.97e-03	-36.98	0.0	-3.11	65.75	0.95	-34.21	-252.04	-
3798.80												
		-3798.80	-252.04	6.64e-03	0.0	40.0	-3.11	47.27	0.95	-34.21	-214.08	-
1538.43												
						80.0	-3.11	28.78	0.95	-34.21	-176.11	-
17.56												
43	339	-60.81	-280.55	-8.19e-03	-36.98	0.0	-4.86	131.38	1.07	-101.47	-365.75	-
9092.16												

Viale Duca Alessandro n. 11 – 43123 Parma
Cell. 335 1403156 – E mail ing.concari@gmail.com
Sito web: studioaire.it – P.IVA 02561480340

		-9092.16	-365.75	5.78e-03	0.0	40.0	-4.86	112.89	1.07	-101.47	-323.15	-
4206.73												
						80.0	-4.86	94.40	1.07	-101.47	-280.55	-
60.81												
43	345	-22.17	63.75	-5.15e-03	-36.98	0.0	5.25	65.93	-0.75	-50.88	63.75	-
3817.19												
		-3817.19	3.62	1.76e-03	0.0	40.0	3.68	47.44	-0.75	-50.88	33.69	-
1549.93												
						80.0	2.12	28.95	-0.75	-50.88	3.62	-
22.17												
43	351	-74.72	-22.78	2.24e-03	-36.98	0.0	-0.74	131.58	7.28	-112.84	-479.98	-
9122.25												
		-9122.25	-479.98	-6.83e-03	-3.13	40.0	-0.74	113.09	5.72	-112.84	-220.05	-
4228.73												
						80.0	-0.74	94.61	4.15	-112.84	-22.78	-
74.72												
44	25	-216.27	-86.74	4.17e-03	-56.18	0.0	-3.34	79.07	3.63	-427.83	-376.88	-
4294.67												
		-4294.67	-376.88	-0.02	0.0	40.0	-3.34	50.98	3.63	-427.83	-231.81	-
1693.72												
						80.0	-3.34	22.89	3.63	-427.83	-86.74	-
216.27												
44	81	-185.94	488.28	-0.02	-56.18	0.0	46.48	79.08	0.63	-439.03	437.69	-
4265.71												
		-4265.71	437.69	0.05	0.0	40.0	34.73	51.00	0.63	-439.03	462.98	-
1664.07												
						80.0	22.98	22.91	0.63	-439.03	488.28	-
185.94												
44	103	-1380.17	3164.32	0.08	-361.03	0.0	57.57	416.69	10.59	-2623.22	2846.03	-
2.027e+04												
		-2.027e+04	2846.03	-0.08	-14.10	40.0	57.57	236.18	3.54	-2623.22	3128.71	-
7217.05												
						80.0	57.57	55.67	-3.51	-2623.22	3129.45	-
1380.17												
44	143	-1083.69	5044.33	0.06	-274.63	0.0	91.95	323.18	20.37	-2049.65	4338.09	-
1.595e+04												
		-1.595e+04	4338.09	-0.11	-23.50	40.0	91.95	185.87	8.62	-2049.65	4917.87	-
5772.05												
						80.0	91.95	48.55	-3.13	-2049.65	5027.74	-
1083.69												
44	165	-458.86	2.731e+04	-0.07	-171.38	0.0	529.80	197.89	-117.08	-944.58	1.417e+04	-
9698.16												
		-9698.16	1.417e+04	0.56	0.0	40.0	529.80	112.20	-117.08	-944.58	2.074e+04	-
3364.76												
						80.0	529.80	26.51	-117.08	-944.58	2.731e+04	-
458.86												
44	168	-850.79	-1.391e+04	0.14	-171.38	0.0	-527.09	211.36	115.80	-1567.54	-1.391e+04	-
1.064e+04												
		-1.064e+04	-2.716e+04	-0.60	0.0	40.0	-527.09	125.67	115.80	-1567.54	-2.053e+04	-
4032.28												
						80.0	-527.09	39.99	115.80	-1567.54	-2.716e+04	-
850.79												
44	182	-244.57	-7863.60	0.02	-171.38	0.0	-207.63	194.56	-144.30	-457.93	-7863.60	-
9054.33												
		-9054.33	-1.166e+04	0.40	0.0	40.0	-207.63	108.87	-144.30	-457.93	-9764.16	-
2935.70												
						80.0	-207.63	23.18	-144.30	-457.93	-1.166e+04	-
244.57												
44	183	-1065.08	1.182e+04	0.05	-171.38	0.0	210.33	214.69	143.02	-2054.19	8121.48	-
1.129e+04												
		-1.129e+04	8121.48	-0.44	0.0	40.0	210.33	129.00	143.02	-2054.19	9970.71	-
4461.34												
						80.0	210.33	43.31	143.02	-2054.19	1.182e+04	-
1065.08												
44	197	-568.99	1.207e+04	-0.01	-171.38	0.0	233.97	201.57	-51.87	-1119.56	6333.45	-
9955.79												
		-9955.79	6333.45	0.24	0.0	40.0	233.97	115.89	-51.87	-1119.56	9203.90	-
3548.64												
						80.0	233.97	30.20	-51.87	-1119.56	1.207e+04	-
568.99												
44	200	-740.66	-6075.57	0.08	-171.38	0.0	-231.27	207.67	50.58	-1392.56	-6075.57	-
1.038e+04												
		-1.038e+04	-1.192e+04	-0.28	0.0	40.0	-231.27	121.99	50.58	-1392.56	-8997.36	-
3848.40												
						80.0	-231.27	36.30	50.58	-1392.56	-1.192e+04	-
740.66												
44	214	-474.20	-3507.32	0.03	-171.38	0.0	-92.37	200.12	-64.24	-904.13	-3507.32	-
9673.23												
		-9673.23	-5195.51	0.16	0.0	40.0	-92.37	114.43	-64.24	-904.13	-4351.41	-
3359.96												
						80.0	-92.37	28.74	-64.24	-904.13	-5195.51	-
474.20												
44	215	-835.45	5350.71	0.04	-171.38	0.0	95.07	209.13	62.96	-1607.99	3765.20	-
1.067e+04												
		-1.067e+04	3765.20	-0.21	0.0	40.0	95.07	123.44	62.96	-1607.99	4557.96	-
4037.07												
						80.0	95.07	37.76	62.96	-1607.99	5350.71	-
835.45												
44	229	-585.69	9745.35	-1.38e-03	-171.38	0.0	188.78	202.15	-41.95	-1146.07	5130.29	-
9995.86												
		-9995.86	5130.29	0.19	0.0	40.0	188.78	116.46	-41.95	-1146.07	7437.82	-
3577.03												

Viale Duca Alessandro n. 11 – 43123 Parma
Cell. 335 1403156 – E mail ing.concari@gmail.com
Sito web: studioaire.it – P.IVA 02561480340

						80.0	188.78	30.77	-41.95	-1146.07	9745.35	-
585.69												
44	232	-723.96	-4872.41	0.07	-171.38	0.0	-186.08	207.10	40.66	-1366.05	-4872.41	-
1.034e+04												
		-1.034e+04	-9590.14	-0.23	0.0	40.0	-186.08	121.41	40.66	-1366.05	-7231.28	-
3820.01												
						80.0	-186.08	35.72	40.66	-1366.05	-9590.14	-
723.96												
44	246	-509.29	-2809.23	0.03	-171.38	0.0	-74.24	200.98	-51.93	-972.48	-2809.23	-
9768.81												
		-9768.81	-4176.51	0.13	0.0	40.0	-74.24	115.29	-51.93	-972.48	-3492.87	-
3425.30												
						80.0	-74.24	29.60	-51.93	-972.48	-4176.51	-
509.29												
44	247	-800.36	4331.72	0.04	-171.38	0.0	76.94	208.27	50.64	-1539.64	3067.11	-
1.057e+04												
		-1.057e+04	3067.11	-0.17	0.0	40.0	76.94	122.58	50.64	-1539.64	3699.42	-
3971.74												
						80.0	76.94	36.89	50.64	-1539.64	4331.72	-
800.36												
44	257	-225.16	-47.90	6.74e-03	-56.18	0.0	-2.05	79.25	2.34	-442.31	-234.71	-
4318.51												
		-4318.51	-234.71	-0.02	0.0	40.0	-2.05	51.17	2.34	-442.31	-141.31	-
1710.09												
						80.0	-2.05	23.08	2.34	-442.31	-47.90	-
225.16												
44	285	-204.95	335.44	-9.90e-03	-56.18	0.0	31.16	79.27	0.34	-449.78	308.33	-
4299.20												
		-4299.20	308.33	0.03	0.0	40.0	23.33	51.18	0.34	-449.78	321.89	-
1690.32												
						80.0	15.50	23.09	0.34	-449.78	335.44	-
204.95												
44	303	-952.51	2114.18	0.05	-248.18	0.0	38.45	288.41	7.03	-1811.65	1903.97	-
1.410e+04												
		-1.410e+04	1903.97	-0.06	-9.40	40.0	38.45	164.32	2.33	-1811.65	2091.10	-
5043.74												
						80.0	38.45	40.24	-2.37	-1811.65	2090.27	-
952.51												
44	323	-754.86	3367.18	0.04	-190.58	0.0	61.37	226.07	13.55	-1429.27	2898.68	-
1.122e+04												
		-1.122e+04	2898.68	-0.07	-15.66	40.0	61.37	130.78	5.71	-1429.27	3283.87	-
4080.41												
						80.0	61.37	35.50	-2.12	-1429.27	3355.79	-
754.86												
44	325	-242.96	49.62	0.01	-56.18	0.0	0.52	79.63	-0.25	-471.27	49.62	-
4366.18												
		-4366.18	29.77	-7.39e-03	0.0	40.0	0.52	51.54	-0.25	-471.27	39.70	-
1742.82												
						80.0	0.52	23.45	-0.25	-471.27	29.77	-
242.96												
44	327	-654.82	128.94	0.03	-171.38	0.0	1.35	204.62	-0.64	-1256.06	128.94	-
1.017e+04												
		-1.017e+04	77.60	-0.02	0.0	40.0	1.35	118.94	-0.64	-1256.06	103.27	-
3698.52												
						80.0	1.35	33.25	-0.64	-1256.06	77.60	-
654.82												
44	331	-723.47	142.16	0.04	-190.58	0.0	1.49	225.46	-0.71	-1386.86	142.16	-
1.114e+04												
		-1.114e+04	85.58	-0.02	0.0	40.0	1.49	130.17	-0.71	-1386.86	113.87	-
4024.47												
						80.0	1.49	34.88	-0.71	-1386.86	85.58	-
723.47												
44	333	-234.06	-9.07	9.31e-03	-56.18	0.0	-0.77	79.44	1.04	-456.79	-92.55	-
4342.35												
		-4342.35	-92.55	-0.01	0.0	40.0	-0.77	51.35	1.04	-456.79	-50.81	-
1726.45												
						80.0	-0.77	23.27	1.04	-456.79	-9.07	-
234.06												
44	351	-658.97	727.13	0.04	-171.38	0.0	13.02	204.70	2.52	-1261.07	646.12	-
1.018e+04												
		-1.018e+04	646.12	-0.03	-3.13	40.0	13.02	119.01	0.95	-1261.07	715.55	-
3705.78												
						80.0	13.02	33.33	-0.61	-1261.07	722.33	-
658.97												
45	103	1308.58	3129.45	-3.51	-45.80	0.0	-3.51	55.67	-57.57	1380.17	3129.45	-
2623.22												
		-2623.22	-3779.27	-0.07	0.0	60.0	-14.08	32.76	-57.57	1380.17	-324.91	
29.68												
						120.0	-24.65	9.86	-57.57	1380.17	-3779.27	
1308.58												
45	121	468.08	2814.51	-0.61	-35.23	0.0	3.75	23.24	-49.17	234.91	2814.51	-
450.36												
		-450.36	-3085.74	-0.06	0.0	60.0	-6.82	5.63	-49.17	234.91	-135.62	
415.77												
						120.0	-17.39	-11.99	-49.17	234.91	-3085.74	
224.98												
45	143	1028.59	5027.74	-2.76	-45.80	0.0	-3.13	48.55	-91.95	1083.69	5027.74	-
2049.65												
		-2049.65	-6006.38	-0.08	0.0	60.0	-20.75	25.65	-91.95	1083.69	-489.32	
176.47												
						120.0	-38.37	2.75	-91.95	1083.69	-6006.38	
1028.59												

Viale Duca Alessandro n. 11 – 43123 Parma
Cell. 335 1403156 – E mail ing.concari@gmail.com
Sito web: studioaire.it – P.IVA 02561480340

45 165 543.47 2.731e+04 -1.31 -35.23 0.0 -54.91 29.81 -474.62 458.86 2.731e+04 -
944.58
-944.58 -2.966e+04 0.34 0.0 60.0 -54.91 12.20 -474.62 458.86 -1176.08
301.44
120.0 -54.91 -5.42 -474.62 458.86 -2.966e+04
490.52
45 168 749.31 2.949e+04 -2.04 -35.23 0.0 53.63 36.68 471.92 850.79 -2.716e+04 -
1567.54
-1567.54 -2.716e+04 -0.40 0.0 60.0 53.63 19.07 471.92 850.79 1169.07
119.35
120.0 53.63 1.45 471.92 850.79 2.949e+04
749.31
45 173 811.77 2.397e+04 -2.21 -35.23 0.0 -81.20 37.75 -415.98 851.54 2.397e+04 -
1615.22
-1615.22 -2.606e+04 -0.28 0.0 60.0 -81.20 20.14 -415.98 851.54 -1043.25
126.73
120.0 -81.20 2.52 -415.98 851.54 -2.606e+04
811.77
45 176 501.67 2.589e+04 -1.14 -35.23 0.0 79.92 28.74 413.28 458.11 -2.382e+04 -
896.90
-896.90 -2.382e+04 0.23 0.0 60.0 79.92 11.13 413.28 458.11 1036.23
294.05
120.0 79.92 -6.49 413.28 458.11 2.589e+04
428.07
45 183 972.36 1.182e+04 -2.57 -35.23 0.0 -19.45 42.70 -218.05 1065.08 1.182e+04 -
2054.19
-2054.19 -1.438e+04 -0.19 0.0 60.0 -19.45 25.08 -218.05 1065.08 -1278.15 -
12.46
120.0 -19.45 7.47 -218.05 1065.08 -1.438e+04
972.36
45 197 584.12 1.207e+04 -1.51 -35.23 0.0 -24.97 31.74 -209.91 568.99 1.207e+04 -
1119.56
-1119.56 -1.312e+04 0.13 0.0 60.0 -24.97 14.13 -209.91 568.99 -524.48
250.32
120.0 -24.97 -3.49 -209.91 568.99 -1.312e+04
563.27
45 200 676.56 1.295e+04 -1.83 -35.23 0.0 23.69 34.75 207.20 740.66 -1.192e+04 -
1392.56
-1392.56 -1.192e+04 -0.19 0.0 60.0 23.69 17.14 207.20 740.66 517.47
170.46
120.0 23.69 -0.48 207.20 740.66 1.295e+04
676.56
45 205 704.24 1.058e+04 -1.91 -35.23 0.0 -37.51 35.23 -183.75 741.29 1.058e+04 -
1413.70
-1413.70 -1.153e+04 -0.14 0.0 60.0 -37.51 17.61 -183.75 741.29 -472.33
173.73
120.0 -37.51 -5.43e-03 -183.75 741.29 -1.153e+04
704.24
45 208 562.55 1.136e+04 -1.44 -35.23 0.0 36.22 31.27 181.05 568.36 -1.043e+04 -
1098.42
-1098.42 -1.043e+04 0.08 0.0 60.0 36.22 13.66 181.05 568.36 465.32
247.05
120.0 36.22 -3.96 181.05 568.36 1.136e+04
535.60
45 215 775.06 5350.71 -2.07 -35.23 0.0 -9.62 37.41 -98.86 835.45 5350.71 -
1607.99
-1607.99 -6527.54 -0.10 0.0 60.0 -9.62 19.80 -98.86 835.45 -588.41
112.00
120.0 -9.62 2.18 -98.86 835.45 -6527.54
775.06
45 229 590.63 9745.35 -1.54 -35.23 0.0 -20.32 32.04 -169.42 585.69 9745.35 -
1146.07
-1146.07 -1.059e+04 0.10 0.0 60.0 -20.32 14.42 -169.42 585.69 -423.52
242.58
120.0 -20.32 -3.19 -169.42 585.69 -1.059e+04
574.30
45 232 665.54 1.042e+04 -1.80 -35.23 0.0 19.03 34.46 166.72 723.96 -9590.14 -
1366.05
-1366.05 -9590.14 -0.16 0.0 60.0 19.03 16.84 166.72 723.96 416.50
178.21
120.0 19.03 -0.77 166.72 723.96 1.042e+04
665.54
45 237 687.86 8542.42 -1.86 -35.23 0.0 -30.62 34.84 -148.36 724.50 8542.42 -
1383.05
-1383.05 -9309.41 -0.12 0.0 60.0 -30.62 17.23 -148.36 724.50 -383.49
180.87
120.0 -30.62 -0.39 -148.36 724.50 -9309.41
687.86
45 240 573.04 9140.17 -1.48 -35.23 0.0 29.33 31.66 145.66 585.15 -8387.21 -
1129.07
-1129.07 -8387.21 0.06 0.0 60.0 29.33 14.04 145.66 585.15 376.48
239.91
120.0 29.33 -3.57 145.66 585.15 9140.17
551.97
45 247 744.92 4331.72 -1.99 -35.23 0.0 -7.94 36.60 -80.04 800.36 4331.72 -
1539.64
-1539.64 -5284.93 -0.09 0.0 60.0 -7.94 18.99 -80.04 800.36 -476.60
131.10
120.0 -7.94 1.37 -80.04 800.36 -5284.93
744.92
45 303 902.95 2090.27 -2.42 -35.23 0.0 -2.37 40.24 -38.45 952.51 2090.27 -
1811.65

Viale Duca Alessandro n. 11 – 43123 Parma
Cell. 335 1403156 – E mail ing.concari@gmail.com
Sito web: studioaire.it – P.IVA 02561480340

		-1811.65	-2523.86	-0.05	0.0	60.0	-9.42	22.62	-38.45	952.51	-216.80	74.11
						120.0	-16.47	5.01	-38.45	952.51	-2523.86	902.95
45	305	466.87	1886.26	-0.62	-35.23	0.0	2.42	23.31	-32.95	237.59	1886.26	-457.33
		-457.33	-2068.02	-0.05	0.0	60.0	-4.63	5.70	-32.95	237.59	-90.88	412.99
						120.0	-11.68	-11.92	-32.95	237.59	-2068.02	226.39
45	323	716.28	3355.79	-1.92	-35.23	0.0	-2.12	35.50	-61.37	754.86	3355.79	-1429.27
		-1429.27	-4008.60	-0.05	0.0	60.0	-13.87	17.88	-61.37	754.86	-326.40	171.97
						120.0	-25.61	0.26	-61.37	754.86	-4008.60	716.28
45	325	464.45	29.77	-0.63	-35.23	0.0	-0.25	23.45	-0.52	242.96	29.77	-471.27
		-471.27	-32.59	-0.01	0.0	60.0	-0.25	5.84	-0.52	242.96	-1.41	407.43
						120.0	-0.25	-11.78	-0.52	242.96	-32.59	229.21
45	327	626.53	77.60	-1.67	-35.23	0.0	-0.64	33.25	-1.35	654.82	77.60	-1256.06
		-1256.06	-84.62	-0.03	0.0	60.0	-0.64	15.63	-1.35	654.82	-3.51	210.39
						120.0	-0.64	-1.98	-1.35	654.82	-84.62	619.92
45	331	685.03	85.58	-1.85	-35.23	0.0	-0.71	34.88	-1.49	723.47	85.58	-1386.86
		-1386.86	-93.29	-0.03	0.0	60.0	-0.71	17.27	-1.49	723.47	-3.86	177.55
						120.0	-0.71	-0.35	-1.49	723.47	-93.29	685.03
45	333	463.53	82.76	-0.61	-35.23	0.0	1.04	23.27	0.77	234.06	-9.07	-456.79
		-456.79	-9.07	-0.02	0.0	60.0	1.04	5.65	0.77	234.06	36.85	410.70
						120.0	1.04	-11.96	0.77	234.06	82.76	221.28
45	351	630.29	722.33	-1.68	-35.23	0.0	-0.61	33.33	-13.02	658.97	722.33	-1261.07
		-1261.07	-840.00	-0.04	0.0	60.0	-2.96	15.71	-13.02	658.97	-58.83	210.06
						120.0	-5.31	-1.90	-13.02	658.97	-840.00	624.26
49	23	-6.476e+04	3890.35	1.14e-03	-3.41	0.0	-598.19	1714.08	391.45	645.49	-24.14	-8.188e+04
		-8.188e+04	-24.14	-2.08e-03	0.0	5.0	-598.19	1712.38	391.45	645.49	1933.10	-7.332e+04
						10.0	-598.19	1710.67	391.45	645.49	3890.35	-6.476e+04
49	61	2642.81	1.65	-7.76e-03	-3.41	0.0	1042.53	1928.01	-336.81	-312.07	1.65	-1.662e+04
		-1.662e+04	-3366.44	-1.03e-03	0.0	5.0	1041.64	1926.31	-336.81	-312.07	-1682.39	-6984.46
						10.0	1040.76	1924.60	-336.81	-312.07	-3366.44	2642.81
49	81	5.850e+04	-13.23	-6.73e-03	-2.62	0.0	738.25	162.27	-231.79	-238.19	-13.23	5.689e+04
		5.689e+04	-2331.14	8.52e-05	0.0	5.0	736.78	160.95	-231.79	-238.19	-1172.19	5.770e+04
						10.0	735.31	159.64	-231.79	-238.19	-2331.14	5.850e+04
49	103	-8.989e+04	1625.46	-1.59e-03	-3.41	0.0	-348.76	2860.82	167.37	583.33	-39.41	-1.185e+05
		-1.185e+05	-39.41	-4.04e-03	-1.76	5.0	-348.76	2859.12	166.49	583.33	795.23	-1.042e+05
						10.0	-348.76	2857.41	165.61	583.33	1625.46	-8.989e+04
49	121	-1.257e+04	-2.91	-4.54e-03	-2.62	0.0	679.37	1187.20	-443.16	-406.85	-2.91	-2.443e+04
		-2.443e+04	-4443.34	-1.55e-03	-1.76	5.0	679.37	1185.89	-444.04	-406.85	-2220.92	-1.849e+04
						10.0	679.37	1184.58	-444.92	-406.85	-4443.34	-1.257e+04
49	123	-4.357e+04	2654.98	1.76e-03	-2.62	0.0	-803.17	700.44	270.72	578.89	-43.36	-5.057e+04
		-5.057e+04	-43.36	-2.51e-03	-1.76	5.0	-803.17	699.13	269.83	578.89	1308.01	-4.707e+04
						10.0	-803.17	697.82	268.95	578.89	2654.98	-4.357e+04
49	154	1.716e+05	-65.13	-0.01	-2.62	0.0	677.63	-819.99	-74.94	409.83	-65.13	1.716e+05
		1.645e+05	-752.78	6.07e-03	0.0	5.0	677.63	-821.30	-74.94	409.83	-408.96	1.681e+05
						10.0	677.63	-822.61	-74.94	409.83	-752.78	1.645e+05
49	155	-2.267e+05	1174.84	0.01	-2.62	0.0	-498.75	3299.29	117.65	-229.98	60.17	-2.586e+05
		-2.586e+05	60.17	-8.09e-03	0.0	5.0	-498.75	3297.98	117.65	-229.98	617.50	-2.426e+05

Viale Duca Alessandro n. 11 – 43123 Parma
Cell. 335 1403156 – E mail ing.concari@gmail.com
Sito web: studioaire.it – P.IVA 02561480340

						10.0	-498.75	3296.67	117.65	-229.98	1174.84	-
2.267e+05												
49	173	-8.851e+04	-269.88	-8.69e-03	-2.62	0.0	-377.34	2623.83	-428.41	641.32	-269.88	-
1.130e+05												
		-1.130e+05	-4535.79	5.22e-03	0.0	5.0	-377.34	2622.52	-428.41	641.32	-2402.84	-
1.007e+05												
						10.0	-377.34	2621.21	-428.41	641.32	-4535.79	-
8.851e+04												
49	174	1.236e+05	3177.60	-1.30e-03	-2.62	0.0	812.31	-936.73	300.90	-121.53	158.42	
1.236e+05												
		1.168e+05	158.42	-1.32e-03	0.0	5.0	812.31	-938.04	300.90	-121.53	1668.01	
1.202e+05												
						10.0	812.31	-939.35	300.90	-121.53	3177.60	
1.168e+05												
49	175	-1.790e+05	-163.39	-1.26e-03	-2.62	0.0	-633.43	3416.03	-258.19	301.38	-163.39	-
2.106e+05												
		-2.106e+05	-2755.54	-7.00e-04	0.0	5.0	-633.43	3414.72	-258.19	301.38	-1459.46	-
1.948e+05												
						10.0	-633.43	3413.41	-258.19	301.38	-2755.54	-
1.790e+05												
49	176	2.632e+04	4957.85	6.13e-03	-2.62	0.0	556.22	-144.53	471.11	-461.47	264.92	
2.602e+04												
		2.602e+04	264.92	-7.24e-03	0.0	5.0	556.22	-145.84	471.11	-461.47	2611.38	
2.618e+04												
						10.0	556.22	-147.15	471.11	-461.47	4957.85	
2.632e+04												
49	186	5.535e+04	-29.22	-6.33e-03	-2.62	0.0	357.71	322.21	-18.75	229.97	-29.22	
5.165e+04												
		5.165e+04	-189.40	2.14e-03	0.0	5.0	357.71	320.90	-18.75	229.97	-109.31	
5.350e+04												
						10.0	357.71	319.59	-18.75	229.97	-189.40	
5.535e+04												
49	187	-1.175e+05	611.46	3.78e-03	-2.62	0.0	-178.83	2157.09	61.46	-50.12	24.26	-
1.386e+05												
		-1.386e+05	24.26	-4.16e-03	0.0	5.0	-178.83	2155.78	61.46	-50.12	317.86	-
1.281e+05												
						10.0	-178.83	2154.47	61.46	-50.12	611.46	-
1.175e+05												
49	205	-5.825e+04	-124.98	-4.53e-03	-2.62	0.0	-129.08	1891.69	-183.74	334.49	-124.98	-
7.642e+04												
		-7.642e+04	-1954.18	1.74e-03	0.0	5.0	-129.08	1890.37	-183.74	334.49	-1039.58	-
6.733e+04												
						10.0	-129.08	1889.06	-183.74	334.49	-1954.18	-
5.825e+04												
49	206	3.577e+04	1594.14	-1.29e-03	-2.62	0.0	424.52	239.97	151.69	-5.10	72.66	
3.230e+04												
		3.230e+04	72.66	-1.12e-03	0.0	5.0	424.52	238.65	151.69	-5.10	833.40	
3.404e+04												
						10.0	424.52	237.34	151.69	-5.10	1594.14	
3.577e+04												
49	207	-9.796e+04	-77.62	-1.27e-03	-2.62	0.0	-245.64	2239.34	-108.99	184.95	-77.62	-
1.193e+05												
		-1.193e+05	-1172.09	-9.02e-04	0.0	5.0	-245.64	2238.03	-108.99	184.95	-624.85	-
1.086e+05												
						10.0	-245.64	2236.72	-108.99	184.95	-1172.09	-
9.796e+04												
49	208	-3934.17	2376.24	1.97e-03	-2.62	0.0	307.96	587.62	226.44	-154.64	120.02	-
1.054e+04												
		-1.054e+04	120.02	-3.76e-03	0.0	5.0	307.96	586.31	226.44	-154.64	1248.13	-
7231.79												
						10.0	307.96	585.00	226.44	-154.64	2376.24	-
3934.17												
49	218	3.865e+04	-23.89	-5.35e-03	-2.62	0.0	307.47	498.12	-10.56	202.67	-23.89	
3.329e+04												
		3.329e+04	-107.41	1.53e-03	0.0	5.0	307.47	496.81	-10.56	202.67	-65.65	
3.597e+04												
						10.0	307.47	495.50	-10.56	202.67	-107.41	
3.865e+04												
49	219	-1.008e+05	529.47	2.79e-03	-2.62	0.0	-128.59	1981.18	53.26	-22.82	18.93	-
1.202e+05												
		-1.202e+05	18.93	-3.55e-03	0.0	5.0	-128.59	1979.87	53.26	-22.82	274.20	-
1.105e+05												
						10.0	-128.59	1978.56	53.26	-22.82	529.47	-
1.008e+05												
49	237	-5.333e+04	-102.11	-3.90e-03	-2.62	0.0	-89.08	1773.05	-145.28	287.43	-102.11	-
7.046e+04												
		-7.046e+04	-1548.25	1.21e-03	0.0	5.0	-89.08	1771.74	-145.28	287.43	-825.18	-
6.190e+04												
						10.0	-89.08	1770.43	-145.28	287.43	-1548.25	-
5.333e+04												
49	238	2.313e+04	1340.13	-1.29e-03	-2.62	0.0	362.65	426.19	127.75	12.95	58.88	
1.801e+04												
		1.801e+04	58.88	-1.09e-03	0.0	5.0	362.65	424.88	127.75	12.95	699.51	
2.057e+04												
						10.0	362.65	423.57	127.75	12.95	1340.13	
2.313e+04												
49	239	-8.532e+04	-63.84	-1.27e-03	-2.62	0.0	-183.77	2053.11	-85.05	166.90	-63.84	-
1.050e+05												
		-1.050e+05	-918.08	-9.28e-04	0.0	5.0	-183.77	2051.80	-85.05	166.90	-490.96	-
9.514e+04												
						10.0	-183.77	2050.49	-85.05	166.90	-918.08	-
8.532e+04												

Viale Duca Alessandro n. 11 – 43123 Parma
Cell. 335 1403156 – E mail ing.concari@gmail.com
Sito web: studioaire.it – P.IVA 02561480340

49	240	-8853.19	1970.31	1.34e-03	-2.62	0.0	267.96	706.25	187.98	-107.58	97.15	-
1.649e+04												
		-1.649e+04	97.15	-3.23e-03	0.0	5.0	267.96	704.94	187.98	-107.58	1033.73	-
1.267e+04												
						10.0	267.96	703.63	187.98	-107.58	1970.31	-
8853.19												
49	263	-4.470e+04	2601.90	6.91e-04	-2.62	0.0	-394.81	1205.52	261.81	431.73	-16.22	-
5.674e+04												
		-5.674e+04	-16.22	-1.43e-03	0.0	5.0	-394.81	1204.20	261.81	431.73	1292.84	-
5.072e+04												
						10.0	-394.81	1202.89	261.81	431.73	2601.90	-
4.470e+04												
49	281	233.39	0.98	-5.24e-03	-2.62	0.0	699.00	1348.14	-223.69	-206.64	0.98	-
1.323e+04												
		-1.323e+04	-2235.96	-7.38e-04	0.0	5.0	698.41	1346.82	-223.69	-206.64	-1117.49	-
6497.46												
						10.0	697.82	1345.51	-223.69	-206.64	-2235.96	
233.39												
49	285	3.518e+04	-9.13	-4.65e-03	-2.62	0.0	502.12	265.16	-152.41	-155.27	-9.13	
3.254e+04												
		3.254e+04	-1533.27	-7.19e-05	0.0	5.0	501.14	263.85	-152.41	-155.27	-771.20	
3.386e+04												
						10.0	500.16	262.54	-152.41	-155.27	-1533.27	
3.518e+04												
49	303	-6.145e+04	1091.97	-1.13e-03	-2.62	0.0	-228.52	1970.01	112.42	390.29	-26.40	-
8.114e+04												
		-8.114e+04	-26.40	-2.74e-03	-1.17	5.0	-228.52	1968.70	111.84	390.29	534.25	-
7.129e+04												
						10.0	-228.52	1967.39	111.25	390.29	1091.97	-
6.145e+04												
49	305	-1.220e+04	-2.25	-3.19e-03	-2.62	0.0	462.86	948.45	-293.33	-267.71	-2.25	-
2.167e+04												
		-2.167e+04	-2941.41	-1.16e-03	-1.17	5.0	462.86	947.14	-293.92	-267.71	-1470.36	-
1.693e+04												
						10.0	462.86	945.83	-294.50	-267.71	-2941.41	-
1.220e+04												
49	307	-3.287e+04	1790.81	1.01e-03	-2.62	0.0	-525.49	623.94	182.59	389.45	-29.22	-
3.910e+04												
		-3.910e+04	-29.22	-1.79e-03	-1.17	5.0	-525.49	622.63	182.00	389.45	882.26	-
3.598e+04												
						10.0	-525.49	621.32	181.42	389.45	1790.81	-
3.287e+04												
49	325	-1.146e+04	62.47	-5.04e-04	-2.62	0.0	29.86	470.96	6.34	10.56	-0.94	-
1.616e+04												
		-1.616e+04	-0.94	-3.64e-04	0.0	5.0	29.86	469.65	6.34	10.56	30.76	-
1.381e+04												
						10.0	29.86	468.33	6.34	10.56	62.47	-
1.146e+04												
49	327	-3.109e+04	211.03	-1.28e-03	-2.62	0.0	89.44	1239.65	21.35	89.92	-2.48	-
4.348e+04												
		-4.348e+04	-2.48	-1.01e-03	0.0	5.0	89.44	1238.34	21.35	89.92	104.27	-
3.728e+04												
						10.0	89.44	1237.03	21.35	89.92	211.03	-
3.109e+04												
49	333	-6295.80	5.80	-1.55e-03	-2.62	0.0	276.95	552.08	-112.64	-153.73	5.80	-
1.180e+04												
		-1.180e+04	-1120.59	-2.05e-04	0.0	5.0	276.95	550.77	-112.64	-153.73	-557.39	-
9046.38												
						10.0	276.95	549.46	-112.64	-153.73	-1120.59	-
6295.80												
49	335	-1.663e+04	1245.52	5.46e-04	-2.62	0.0	-217.23	389.83	125.32	174.85	-7.68	-
2.052e+04												
		-2.052e+04	-7.68	-5.22e-04	0.0	5.0	-217.23	388.52	125.32	174.85	618.92	-
1.857e+04												
						10.0	-217.23	387.21	125.32	174.85	1245.52	-
1.663e+04												
49	337	-2.593e+04	4.26	-2.33e-03	-2.62	0.0	336.53	1320.78	-97.63	-74.37	4.26	-
3.912e+04												
		-3.912e+04	-972.03	-8.50e-04	0.0	5.0	336.53	1319.47	-97.63	-74.37	-483.88	-
3.252e+04												
						10.0	336.53	1318.16	-97.63	-74.37	-972.03	-
2.593e+04												
49	339	-3.626e+04	1394.08	-2.29e-04	-2.62	0.0	-157.65	1158.53	140.33	254.22	-9.22	-
4.783e+04												
		-4.783e+04	-9.22	-1.17e-03	0.0	5.0	-157.65	1157.21	140.33	254.22	692.43	-
4.204e+04												
						10.0	-157.65	1155.90	140.33	254.22	1394.08	-
3.626e+04												
49	345	-3375.82	27.25	-1.08e-03	-2.62	0.0	65.01	410.33	3.14	16.82	-4.20	-
7465.98												
		-7465.98	-4.20	-3.43e-04	0.0	5.0	64.82	409.02	3.14	16.82	11.53	-
5417.62												
						10.0	64.62	407.70	3.14	16.82	27.25	-
3375.82												
49	351	-3.478e+04	-1.56	-1.48e-03	-2.62	0.0	69.05	1344.73	0.78	106.69	-7.41	-
4.822e+04												
		-4.822e+04	-7.41	-1.38e-03	-0.39	5.0	69.05	1343.42	0.59	106.69	-4.00	-
4.150e+04												
						10.0	69.05	1342.11	0.39	106.69	-1.56	-
3.478e+04												
50	45	1.070e+05	-162.84	2.46	1001.81	0.0	44.61	-993.09	0.15	-1249.27	-196.24	
1.070e+05												

Viale Duca Alessandro n. 11 – 43123 Parma
Cell. 335 1403156 – E mail ing.concari@gmail.com
Sito web: studioaire.it – P.IVA 02561480340

		-1304.89	-196.24	0.05	0.0	110.0	25.22	-492.19	0.15	-1249.27	-179.54	2.529e+04
						220.0	5.84	8.72	0.15	-1249.27	-162.84	-1304.89
50	81	2.028e+04	-155.00	0.42	161.39	0.0	76.88	-173.71	0.63	-196.26	-294.13	2.028e+04
		-185.94	-294.13	-0.11	0.0	110.0	44.57	-93.02	0.63	-196.26	-224.57	5607.62
						220.0	12.26	-12.32	0.63	-196.26	-155.00	-185.94
50	103	1.066e+05	5908.80	2.54	1001.81	0.0	-57.57	-991.94	-63.42	-1308.58	5908.80	1.066e+05
		-1380.17	-3779.27	0.26	38.77	110.0	-57.57	-491.04	-44.04	-1308.58	-1.37	2.508e+04
						220.0	-57.57	9.86	-24.65	-1308.58	-3779.27	-1380.17
50	143	8.237e+04	9542.87	1.99	764.21	0.0	-91.95	-761.45	-102.99	-1028.59	9542.87	8.237e+04
		-1083.69	-6006.38	0.34	64.61	110.0	-91.95	-379.35	-70.68	-1028.59	-8.64	1.963e+04
						220.0	-91.95	2.75	-38.37	-1028.59	-6006.38	-1083.69
50	166	8.053e+04	-1.691e+04	0.66	478.19	0.0	433.54	-609.73	-158.79	-317.89	-3.345e+04	8.053e+04
		-265.39	-3.345e+04	-1.92	0.0	110.0	433.54	-370.64	-158.79	-317.89	-2.518e+04	2.698e+04
						220.0	433.54	-131.54	-158.79	-317.89	-1.691e+04	-265.39
50	167	2.423e+04	3.356e+04	1.76	478.19	0.0	-436.25	-350.61	157.50	-921.95	3.356e+04	2.423e+04
		-4588.44	1.674e+04	2.04	0.0	110.0	-436.25	-111.51	157.50	-921.95	2.515e+04	-1557.50
						220.0	-436.25	127.58	157.50	-921.95	1.674e+04	-1044.26
50	182	8.938e+04	1.421e+04	0.51	478.19	0.0	420.60	-650.12	146.48	-267.48	-3.347e+04	8.938e+04
		-244.57	-3.347e+04	-1.15	0.0	110.0	420.60	-411.03	146.48	-267.48	-9631.65	3.142e+04
						220.0	420.60	-171.93	146.48	-267.48	1.421e+04	-244.57
50	183	1.538e+04	3.358e+04	1.91	478.19	0.0	-423.30	-310.22	-147.77	-972.36	3.358e+04	1.538e+04
		-7226.68	-1.438e+04	1.27	0.0	110.0	-423.30	-71.13	-147.77	-972.36	9603.58	-5992.31
						220.0	-423.30	167.97	-147.77	-972.36	-1.438e+04	-1065.08
50	198	6.480e+04	-7423.58	0.97	478.19	0.0	190.47	-537.30	-69.56	-487.23	-1.472e+04	6.480e+04
		-483.74	-1.472e+04	-0.81	0.0	110.0	190.47	-298.20	-69.56	-487.23	-1.107e+04	1.901e+04
						220.0	190.47	-59.11	-69.56	-487.23	-7423.58	-483.74
50	199	3.997e+04	1.484e+04	1.45	478.19	0.0	-193.17	-423.05	68.28	-752.61	1.484e+04	3.997e+04
		-1479.80	7254.34	0.93	0.0	110.0	-193.17	-183.95	68.28	-752.61	1.105e+04	6421.20
						220.0	-193.17	55.14	68.28	-752.61	7254.34	-825.91
50	214	6.881e+04	6358.31	0.90	478.19	0.0	186.40	-555.60	65.74	-464.77	-1.489e+04	6.881e+04
		-474.20	-1.489e+04	-0.47	0.0	110.0	186.40	-316.50	65.74	-464.77	-4265.92	2.102e+04
						220.0	186.40	-77.41	65.74	-464.77	6358.31	-474.20
50	215	3.596e+04	1.500e+04	1.52	478.19	0.0	-189.11	-404.74	-67.02	-775.06	1.500e+04	3.596e+04
		-1989.43	-6527.54	0.59	0.0	110.0	-189.11	-165.65	-67.02	-775.06	4237.86	4411.30
						220.0	-189.11	73.45	-67.02	-775.06	-6527.54	-835.45
50	230	6.239e+04	-5994.60	1.02	478.19	0.0	153.25	-526.21	-56.14	-513.02	-1.186e+04	6.239e+04
		-517.00	-1.186e+04	-0.64	0.0	110.0	153.25	-287.12	-56.14	-513.02	-8925.53	1.778e+04
						220.0	153.25	-48.02	-56.14	-513.02	-5994.60	-517.00
50	231	4.238e+04	1.197e+04	1.41	478.19	0.0	-155.95	-434.13	54.85	-726.81	1.197e+04	4.238e+04
		-1176.58	5825.36	0.76	0.0	110.0	-155.95	-195.04	54.85	-726.81	8897.46	7642.37
						220.0	-155.95	44.06	54.85	-726.81	5825.36	-792.65
50	246	6.563e+04	5115.69	0.96	478.19	0.0	150.05	-540.99	52.94	-494.91	-1.200e+04	6.563e+04
		-509.29	-1.200e+04	-0.37	0.0	110.0	150.05	-301.90	52.94	-494.91	-3441.61	1.941e+04
						220.0	150.05	-62.81	52.94	-494.91	5115.69	-509.29
50	247	3.914e+04	1.211e+04	1.46	478.19	0.0	-152.75	-419.35	-54.22	-744.92	1.211e+04	3.914e+04
		-1561.24	-5284.93	0.48	0.0	110.0	-152.75	-180.25	-54.22	-744.92	3413.55	6018.79

Viale Duca Alessandro n. 11 – 43123 Parma
Cell. 335 1403156 – E mail ing.concari@gmail.com
Sito web: studioaire.it – P.IVA 02561480340

						220.0	-152.75	58.84	-54.22	-744.92	-5284.93	-
800.36												
50	273	7.400e+04	-112.91	1.70	689.39	0.0	29.67	-685.15	0.07	-863.41	-127.89	
7.400e+04												
		-902.32	-127.89	0.04	0.0	110.0	16.75	-340.45	0.07	-863.41	-120.40	
1.759e+04												
						220.0	3.82	4.24	0.07	-863.41	-112.91	-
902.32												
50	285	2.022e+04	-114.20	0.43	161.39	0.0	51.08	-173.53	0.34	-207.25	-188.75	
2.022e+04												
		-204.94	-188.75	-0.07	0.0	110.0	29.54	-92.84	0.34	-207.25	-151.47	
5568.70												
						220.0	8.00	-12.14	0.34	-207.25	-114.20	-
204.94												
50	303	7.378e+04	3942.13	1.75	689.39	0.0	-38.45	-684.38	-42.31	-902.95	3942.13	
7.378e+04												
		-952.51	-2523.86	0.17	25.85	110.0	-38.45	-339.69	-29.39	-902.95	-1.62	
1.746e+04												
						220.0	-38.45	5.01	-16.47	-902.95	-2523.86	-
952.51												
50	323	5.760e+04	6364.85	1.39	530.99	0.0	-61.37	-530.73	-68.69	-716.28	6364.85	
5.760e+04												
		-754.86	-4008.60	0.23	43.08	110.0	-61.37	-265.23	-47.15	-716.28	-6.47	
1.382e+04												
						220.0	-61.37	0.26	-25.61	-716.28	-4008.60	-
754.86												
50	325	2.010e+04	22.00	0.45	161.39	0.0	-0.52	-173.17	-0.25	-229.21	22.00	
2.010e+04												
		-242.96	-32.59	0.02	0.0	110.0	-0.52	-92.47	-0.25	-229.21	-5.29	
5490.85												
						220.0	-0.52	-11.78	-0.25	-229.21	-32.59	-
242.96												
50	327	5.238e+04	56.55	1.21	478.19	0.0	-1.35	-480.17	-0.64	-619.92	56.55	
5.238e+04												
		-654.82	-84.62	0.06	0.0	110.0	-1.35	-241.08	-0.64	-619.92	-14.03	
1.271e+04												
						220.0	-1.35	-1.98	-0.64	-619.92	-84.62	-
654.82												
50	331	5.776e+04	62.31	1.34	530.99	0.0	-1.49	-531.34	-0.71	-685.03	62.31	
5.776e+04												
		-723.47	-93.29	0.06	0.0	110.0	-1.49	-265.84	-0.71	-685.03	-15.49	
1.392e+04												
						220.0	-1.49	-0.35	-0.71	-685.03	-93.29	-
723.47												
50	345	2.011e+04	20.36	0.45	161.39	0.0	9.49	-173.20	-0.44	-226.72	20.36	
2.011e+04												
		-237.49	-76.59	4.37e-04	0.0	110.0	5.18	-92.50	-0.44	-226.72	-28.11	
5499.35												
						220.0	0.88	-11.81	-0.44	-226.72	-76.59	-
237.49												
50	351	5.236e+04	1276.54	1.22	478.19	0.0	-13.02	-480.09	-13.93	-624.26	1276.54	
5.236e+04												
		-658.97	-840.00	0.09	8.62	110.0	-13.02	-241.00	-9.62	-624.26	-18.64	
1.270e+04												
						220.0	-13.02	-1.90	-5.31	-624.26	-840.00	-
658.97												

Si riportano di seguito i valori minimi e massimi degli sforzi M3 – M2 – N – V2 – V3 – T per le travi:

Trave	M3 mx/mn	M2 mx/mn	D 2 / D 3	Q 2 / Q 3	N	V 2	V 3	T
	-2.611e+05	-4.440e+04	-3.51	-1366.10	-3649.24	-3702.14	-2151.48	-2666.29
	2.060e+05	4.359e+04	2.54	1397.47	3501.67	3416.03	2085.26	2445.96

MODELLO 2 VANO ASCENSORE

Pilas.	Cmb	M3 mx/mn	M2 mx/mn	D 2 / D 3	Q 2 / Q 3	Pos.	N	V 2	V 3	T	M 2	M 3
		daN cm	daN cm	cm	daN	cm	daN	daN	daN	daN cm	daN cm	daN
cm												
1	21	4714.51	1.763e+04	7.89e-03	0.0	0.0	-517.68	50.62	87.48	-13.91	-1.298e+04	-
1.300e+04												
		-1.300e+04	-1.298e+04	-0.21	0.0	175.0	-421.60	50.62	87.48	-13.91	2324.68	-
4143.89												
						350.0	-325.52	50.62	87.48	-13.91	1.763e+04	
4714.51												
1	26	-2419.86	1.899e+04	0.07	0.0	0.0	-363.88	-18.93	93.92	-25.51	-1.388e+04	-
2419.86												
		-9045.65	-1.388e+04	-0.22	0.0	175.0	-289.97	-18.93	93.92	-25.51	2552.96	-
5732.76												
						350.0	-216.06	-18.93	93.92	-25.51	1.899e+04	-
9045.65												
1	35	1.020e+04	9798.00	0.02	0.0	0.0	-156.29	114.56	-65.07	12.64	9798.00	-
2.990e+04												
		-2.990e+04	-1.297e+04	0.14	0.0	175.0	-60.21	114.56	-65.07	12.64	-1588.47	-
9848.20												
						350.0	35.87	114.56	-65.07	12.64	-1.297e+04	
1.020e+04												
1	47	9331.65	1.566e+04	0.02	0.0	0.0	-59.19	101.20	-104.57	19.09	1.566e+04	-
2.609e+04												
		-2.609e+04	-2.094e+04	0.24	0.0	175.0	36.89	101.20	-104.57	19.09	-2637.98	-
8378.98												

Viale Duca Alessandro n. 11 – 43123 Parma
Cell. 335 1403156 – E mail ing.concari@gmail.com
Sito web: studioaire.it – P.IVA 02561480340

						350.0	132.97	101.20	-104.57	19.09	-2.094e+04	
9331.65												
1	52	-4428.51	1.476e+04	0.07	0.0	0.0	94.62	31.65	-98.13	7.48	1.476e+04	-
1.551e+04												
		-1.551e+04	-1.958e+04	0.23	0.0	175.0	168.52	31.65	-98.13	7.48	-2409.69	-
9967.85												
						350.0	242.43	31.65	-98.13	7.48	-1.958e+04	-
4428.51												
1	65	4.297e+04	4268.91	-0.25	0.0	0.0	-591.05	195.42	19.58	-4.69	-2592.05	-
2.932e+04												
		-2.932e+04	-2592.05	-0.09	0.0	175.0	-517.14	195.42	19.58	-4.69	838.43	
6828.12												
						350.0	-443.24	195.42	19.58	-4.69	4268.91	
4.297e+04												
1	68	3304.30	2532.46	0.32	0.0	0.0	214.95	-125.44	-17.88	-4.64	2532.46	
3304.30												
		-4.449e+04	-3732.75	0.09	0.0	175.0	288.86	-125.44	-17.88	-4.64	-600.14	-
2.059e+04												
						350.0	362.77	-125.44	-17.88	-4.64	-3732.75	-
4.449e+04												
1	70	1.233e+04	1.738e+04	-0.04	0.0	0.0	4.72	90.73	-118.07	9.16	1.738e+04	-
1.962e+04												
		-1.962e+04	-2.396e+04	0.26	0.0	175.0	78.63	90.73	-118.07	9.16	-3289.80	-
3647.76												
						350.0	152.53	90.73	-118.07	9.16	-2.396e+04	
1.233e+04												
1	71	-6389.67	2.450e+04	0.11	0.0	0.0	-380.82	-20.75	119.77	-18.49	-1.744e+04	-
6389.67												
		-1.384e+04	-1.744e+04	-0.27	0.0	175.0	-306.91	-20.75	119.77	-18.49	3528.09	-
1.012e+04												
						350.0	-233.00	-20.75	119.77	-18.49	2.450e+04	-
1.384e+04												
1	81	2.016e+04	2.035e+04	-0.12	0.0	0.0	-594.69	66.64	98.59	-41.55	-1.418e+04	-
1.514e+04												
		-1.514e+04	-1.418e+04	-0.26	0.0	175.0	-520.78	66.64	98.59	-41.55	3083.68	
2510.57												
						350.0	-446.87	66.64	98.59	-41.55	2.035e+04	
2.016e+04												
1	84	-1.087e+04	1.412e+04	0.19	0.0	0.0	218.59	3.34	-96.88	32.22	1.412e+04	-
1.087e+04												
		-2.168e+04	-1.981e+04	0.25	0.0	175.0	292.50	3.34	-96.88	32.22	-2845.39	-
1.628e+04												
						350.0	366.40	3.34	-96.88	32.22	-1.981e+04	-
2.168e+04												
1	97	2.796e+04	2895.55	-0.15	0.0	0.0	-452.65	140.09	13.14	-4.69	-1708.78	-
2.359e+04												
		-2.359e+04	-1708.78	-0.06	0.0	175.0	-378.75	140.09	13.14	-4.69	593.39	
2184.54												
						350.0	-304.84	140.09	13.14	-4.69	2895.55	
2.796e+04												
1	100	-2421.11	1649.19	0.22	0.0	0.0	76.55	-70.11	-11.44	-4.64	1649.19	-
2421.11												
		-2.948e+04	-2359.40	0.06	0.0	175.0	150.46	-70.11	-11.44	-4.64	-355.10	-
1.595e+04												
						350.0	224.37	-70.11	-11.44	-4.64	-2359.40	-
2.948e+04												
1	102	7801.99	1.141e+04	-0.01	0.0	0.0	-61.20	71.33	-77.30	4.40	1.141e+04	-
1.728e+04												
		-1.728e+04	-1.566e+04	0.17	0.0	175.0	12.71	71.33	-77.30	4.40	-2125.62	-
4736.52												
						350.0	86.61	71.33	-77.30	4.40	-1.566e+04	
7801.99												
1	103	-8736.51	1.619e+04	0.08	0.0	0.0	-314.90	-1.35	79.00	-13.73	-1.147e+04	-
8736.51												
		-9320.25	-1.147e+04	-0.18	0.0	175.0	-240.99	-1.35	79.00	-13.73	2363.91	-
9028.38												
						350.0	-167.08	-1.35	79.00	-13.73	1.619e+04	-
9320.25												
1	113	1.299e+04	1.346e+04	-0.07	0.0	0.0	-455.21	55.68	65.02	-28.93	-9311.88	-
1.437e+04												
		-1.437e+04	-9311.88	-0.17	0.0	175.0	-381.30	55.68	65.02	-28.93	2073.71	-
689.69												
						350.0	-307.39	55.68	65.02	-28.93	1.346e+04	
1.299e+04												
1	116	-1.164e+04	9252.29	0.14	0.0	0.0	79.11	14.30	-63.31	19.60	9252.29	-
1.164e+04												
		-1.451e+04	-1.292e+04	0.16	0.0	175.0	153.01	14.30	-63.31	19.60	-1835.42	-
1.308e+04												
						350.0	226.92	14.30	-63.31	19.60	-1.292e+04	-
1.451e+04												
1	127	3709.90	1.173e+04	6.12e-03	0.0	0.0	-376.20	39.56	58.16	-9.15	-8627.90	-
1.014e+04												
		-1.014e+04	-8627.90	-0.14	0.0	175.0	-302.29	39.56	58.16	-9.15	1550.00	-
3213.54												
						350.0	-228.38	39.56	58.16	-9.15	1.173e+04	
3709.90												
1	128	-4613.20	1.259e+04	0.05	0.0	0.0	-320.28	1.92	62.20	-16.71	-9183.25	-
5285.22												
		-5285.22	-9183.25	-0.14	0.0	175.0	-246.37	1.92	62.20	-16.71	1702.52	-
4949.21												
						350.0	-172.46	1.92	62.20	-16.71	1.259e+04	-
4613.20												
1	135	7366.20	6560.65	0.01	0.0	0.0	-135.27	82.19	-43.54	8.54	6560.65	-
2.140e+04												
		-2.140e+04	-8678.18	0.10	0.0	175.0	-61.36	82.19	-43.54	8.54	-1058.76	-
7016.42												
						350.0	12.55	82.19	-43.54	8.54	-8678.18	
7366.20												

Viale Duca Alessandro n. 11 – 43123 Parma
Cell. 335 1403156 – E mail ing.concari@gmail.com
Sito web: studioaire.it – P.IVA 02561480340

1	141	6787.99	1.047e+04	0.01	0.0	0.0	-70.53	73.29	-69.87	12.84	1.047e+04	-
1.886e+04												
		-1.886e+04	-1.399e+04	0.16	0.0	175.0	3.37	73.29	-69.87	12.84	-1758.43	-
6036.94												
						350.0	77.28	73.29	-69.87	12.84	-1.399e+04	
6787.99												
1	142	-1535.11	9914.25	0.04	0.0	0.0	-14.62	35.64	-65.83	5.28	9914.25	-
1.401e+04												
		-1.401e+04	-1.313e+04	0.15	0.0	175.0	59.29	35.64	-65.83	5.28	-1605.92	-
7772.61												
						350.0	133.20	35.64	-65.83	5.28	-1.313e+04	-
1535.11												
1	145	6173.95	447.75	0.01	0.0	0.0	-232.74	68.68	-2.58	1.47	447.75	-
1.787e+04												
		-1.787e+04	-454.99	1.97e-03	0.0	175.0	-158.83	68.68	-2.58	1.47	-3.62	-
5845.88												
						350.0	-84.92	68.68	-2.58	1.47	-454.99	
6173.95												
1	151	4143.34	2176.28	6.39e-03	0.0	0.0	-261.70	42.81	10.66	-1.12	-1553.65	-
1.084e+04												
		-1.084e+04	-1553.65	-0.03	0.0	175.0	-187.80	42.81	10.66	-1.12	311.31	-
3348.40												
						350.0	-113.89	42.81	10.66	-1.12	2176.28	
4143.34												
1	152	-2515.14	2864.58	0.04	0.0	0.0	-216.97	12.70	13.89	-7.17	-1997.93	-
6958.73												
		-6958.73	-1997.93	-0.03	0.0	175.0	-143.06	12.70	13.89	-7.17	433.33	-
4736.94												
						350.0	-69.15	12.70	13.89	-7.17	2864.58	-
2515.14												
1	157	6022.15	2418.86	0.01	0.0	0.0	-200.34	66.02	-15.84	3.66	2418.86	-
1.709e+04												
		-1.709e+04	-3126.52	0.03	0.0	175.0	-126.44	66.02	-15.84	3.66	-353.83	-
5532.13												
						350.0	-52.53	66.02	-15.84	3.66	-3126.52	
6022.15												
1	158	-636.33	1974.58	0.04	0.0	0.0	-155.61	35.91	-12.61	-2.39	1974.58	-
1.321e+04												
		-1.321e+04	-2438.21	0.03	0.0	175.0	-81.70	35.91	-12.61	-2.39	-231.82	-
6920.66												
						350.0	-7.79	35.91	-12.61	-2.39	-2438.21	-
636.33												
1	159	4251.70	214.91	6.46e-03	0.0	0.0	-233.08	43.62	-1.22	0.88	214.91	-
1.102e+04												
		-1.102e+04	-211.63	1.74e-03	0.0	175.0	-159.17	43.62	-1.22	0.88	1.64	-
3382.12												
						350.0	-85.26	43.62	-1.22	0.88	-211.63	
4251.70												
1	160	-2406.78	476.68	0.04	0.0	0.0	-188.34	13.51	2.02	-5.17	-229.37	-
7134.52												
		-7134.52	-229.37	-2.89e-03	0.0	175.0	-114.44	13.51	2.02	-5.17	123.65	-
4770.65												
						350.0	-40.53	13.51	2.02	-5.17	476.68	-
2406.78												
1	161	5899.35	414.49	0.01	0.0	0.0	-232.79	65.10	-2.38	1.38	414.49	-
1.689e+04												
		-1.689e+04	-420.23	1.94e-03	0.0	175.0	-158.88	65.10	-2.38	1.38	-2.87	-
5493.92												
						350.0	-84.97	65.10	-2.38	1.38	-420.23	
5899.35												
1	162	-759.13	268.08	0.04	0.0	0.0	-188.05	34.99	0.85	-4.67	-29.79	-
1.301e+04												
		-1.301e+04	-29.79	-2.61e-03	0.0	175.0	-114.14	34.99	0.85	-4.67	119.14	-
6882.45												
						350.0	-40.23	34.99	0.85	-4.67	268.08	-
759.13												
2	24	1.369e+04	3.758e+04	0.10	0.0	0.0	374.14	269.98	205.91	38.07	-3.449e+04	-
8.080e+04												
		-8.080e+04	-3.449e+04	-0.38	0.0	175.0	470.22	269.98	205.91	38.07	1541.38	-
3.356e+04												
						350.0	566.30	269.98	205.91	38.07	3.758e+04	
1.369e+04												
2	28	9588.71	3.739e+04	0.09	0.0	0.0	453.25	220.40	204.88	37.69	-3.432e+04	-
6.755e+04												
		-6.755e+04	-3.432e+04	-0.38	0.0	175.0	527.16	220.40	204.88	37.69	1535.87	-
2.898e+04												
						350.0	601.07	220.40	204.88	37.69	3.739e+04	
9588.71												
2	35	2.619e+04	1.560e+04	0.07	0.0	0.0	-684.61	356.99	-94.18	-6.20	1.560e+04	-
9.876e+04												
		-9.876e+04	-1.737e+04	0.21	0.0	175.0	-588.53	356.99	-94.18	-6.20	-886.89	-
3.628e+04												
						350.0	-492.45	356.99	-94.18	-6.20	-1.737e+04	
2.619e+04												
2	45	1.933e+04	2.792e+04	0.03	0.0	0.0	-936.76	224.10	-168.17	-15.33	2.792e+04	-
5.911e+04												
		-5.911e+04	-3.094e+04	0.35	0.0	175.0	-840.68	224.10	-168.17	-15.33	-1512.19	-
1.989e+04												
						350.0	-744.60	224.10	-168.17	-15.33	-3.094e+04	
1.933e+04												
2	65	4.565e+04	1.889e+04	-0.20	0.0	0.0	-276.97	299.68	103.24	37.64	-1.726e+04	-
5.590e+04												
		-5.590e+04	-1.726e+04	-0.18	0.0	175.0	-203.06	299.68	103.24	37.64	817.42	-
5127.46												
						350.0	-129.15	299.68	103.24	37.64	1.889e+04	
4.565e+04												
2	69	2.621e+04	4.117e+04	-0.11	0.0	0.0	253.99	259.03	221.37	70.87	-3.632e+04	-
6.221e+04												

Viale Duca Alessandro n. 11 – 43123 Parma
Cell. 335 1403156 – E mail ing.concari@gmail.com
Sito web: studioaire.it – P.IVA 02561480340

		-6.221e+04	-3.632e+04	-0.45	0.0	175.0	327.90	259.03	221.37	70.87	2424.84	-
1.800e+04												
						350.0	401.81	259.03	221.37	70.87	4.117e+04	
2.621e+04												
2	70	1.519e+04	1.468e+04	0.04	0.0	0.0	-803.85	196.53	-93.62	-20.69	1.468e+04	-
5.127e+04												
		-5.127e+04	-1.810e+04	0.24	0.0	175.0	-729.94	196.53	-93.62	-20.69	-1707.27	-
1.804e+04												
						350.0	-656.03	196.53	-93.62	-20.69	-1.810e+04	
1.519e+04												
2	71	9664.26	2.872e+04	0.07	0.0	0.0	482.95	208.79	153.15	46.22	-2.489e+04	-
6.574e+04												
		-6.574e+04	-2.489e+04	-0.32	0.0	175.0	556.86	208.79	153.15	46.22	1917.55	-
2.804e+04												
						350.0	630.77	208.79	153.15	46.22	2.872e+04	
9664.26												
2	79	1.725e+04	1.629e+04	0.23	0.0	0.0	262.15	204.95	87.59	29.59	-1.440e+04	-
6.928e+04												
		-6.928e+04	-1.440e+04	-0.16	0.0	175.0	336.06	204.95	87.59	29.59	946.89	-
2.601e+04												
						350.0	409.97	204.95	87.59	29.59	1.629e+04	
1.725e+04												
2	97	3.424e+04	1.423e+04	-0.13	0.0	0.0	-237.02	265.93	78.02	29.12	-1.308e+04	-
5.718e+04												
		-5.718e+04	-1.308e+04	-0.13	0.0	175.0	-163.12	265.93	78.02	29.12	574.95	-
1.147e+04												
						350.0	-89.21	265.93	78.02	29.12	1.423e+04	
3.424e+04												
2	101	2.146e+04	2.887e+04	-0.07	0.0	0.0	111.82	239.41	155.63	50.97	-2.560e+04	-
6.100e+04												
		-6.100e+04	-2.560e+04	-0.31	0.0	175.0	185.73	239.41	155.63	50.97	1634.10	-
1.977e+04												
						350.0	259.64	239.41	155.63	50.97	2.887e+04	
2.146e+04												
2	102	1.426e+04	7882.52	0.05	0.0	0.0	-583.15	198.65	-51.26	-9.23	7882.52	-
5.388e+04												
		-5.388e+04	-1.006e+04	0.15	0.0	175.0	-509.24	198.65	-51.26	-9.23	-1089.84	-
1.981e+04												
						350.0	-435.34	198.65	-51.26	-9.23	-1.006e+04	
1.426e+04												
2	103	1.059e+04	2.069e+04	0.07	0.0	0.0	262.26	206.68	110.79	34.76	-1.809e+04	-
6.313e+04												
		-6.313e+04	-1.809e+04	-0.22	0.0	175.0	336.16	206.68	110.79	34.76	1300.12	-
2.627e+04												
						350.0	410.07	206.68	110.79	34.76	2.069e+04	
1.059e+04												
2	111	1.561e+04	1.251e+04	0.16	0.0	0.0	116.91	204.32	67.63	23.83	-1.118e+04	-
6.550e+04												
		-6.550e+04	-1.118e+04	-0.12	0.0	175.0	190.82	204.32	67.63	23.83	662.09	-
2.494e+04												
						350.0	264.73	204.32	67.63	23.83	1.251e+04	
1.561e+04												
2	130	1.095e+04	2.513e+04	0.07	0.0	0.0	214.27	202.03	137.73	25.55	-2.307e+04	-
5.976e+04												
		-5.976e+04	-2.307e+04	-0.26	0.0	175.0	288.18	202.03	137.73	25.55	1030.03	-
2.441e+04												
						350.0	362.09	202.03	137.73	25.55	2.513e+04	
1.095e+04												
2	135	1.928e+04	1.032e+04	0.05	0.0	0.0	-491.56	260.03	-62.33	-3.96	1.032e+04	-
7.173e+04												
		-7.173e+04	-1.150e+04	0.14	0.0	175.0	-417.65	260.03	-62.33	-3.96	-588.82	-
2.622e+04												
						350.0	-343.75	260.03	-62.33	-3.96	-1.150e+04	
1.928e+04												
2	139	1.471e+04	1.853e+04	0.03	0.0	0.0	-659.67	171.44	-111.66	-10.05	1.853e+04	-
4.529e+04												
		-4.529e+04	-2.055e+04	0.24	0.0	175.0	-585.76	171.44	-111.66	-10.05	-1005.68	-
1.529e+04												
						350.0	-511.85	171.44	-111.66	-10.05	-2.055e+04	
1.471e+04												
2	145	1.716e+04	1026.55	0.04	0.0	0.0	-256.89	229.03	5.73	2.37	-979.69	-
6.300e+04												
		-6.300e+04	-979.69	1.39e-03	0.0	175.0	-182.98	229.03	5.73	2.37	23.43	-
2.292e+04												
						350.0	-109.07	229.03	5.73	2.37	1026.55	
1.716e+04												
2	154	1.224e+04	9048.93	0.06	0.0	0.0	-90.57	201.58	50.07	14.76	-8477.22	-
5.831e+04												
		-5.831e+04	-8477.22	-0.08	0.0	175.0	-16.66	201.58	50.07	14.76	285.85	-
2.303e+04												
						350.0	57.25	201.58	50.07	14.76	9048.93	
1.224e+04												
2	155	1.388e+04	3241.62	0.03	0.0	0.0	-342.88	166.52	-19.59	-0.99	3241.62	-
4.440e+04												
		-4.440e+04	-3614.53	0.05	0.0	175.0	-268.97	166.52	-19.59	-0.99	-186.45	-
1.526e+04												
						350.0	-195.07	166.52	-19.59	-0.99	-3614.53	
1.388e+04												
2	159	1.367e+04	618.28	0.03	0.0	0.0	-263.69	165.29	3.43	1.28	-581.58	-
4.418e+04												
		-4.418e+04	-581.58	2.44e-03	0.0	175.0	-189.78	165.29	3.43	1.28	18.35	-
1.526e+04												
						350.0	-115.87	165.29	3.43	1.28	618.28	
1.367e+04												
2	161	1.666e+04	968.22	0.04	0.0	0.0	-257.86	219.92	5.40	2.21	-922.82	-
6.031e+04												
		-6.031e+04	-922.82	1.54e-03	0.0	175.0	-183.95	219.92	5.40	2.21	22.70	-
2.182e+04												

Viale Duca Alessandro n. 11 – 43123 Parma
Cell. 335 1403156 – E mail ing.concari@gmail.com
Sito web: studioaire.it – P.IVA 02561480340

						350.0	-110.04	219.92	5.40	2.21	968.22	
1.666e+04												
2	162	1.243e+04	5314.10	0.06	0.0	0.0	-160.45	202.66	29.77	12.77	-5103.82	-
5.851e+04												
		-5.851e+04	-5103.82	-0.04	0.0	175.0	-86.54	202.66	29.77	12.77	105.14	-
2.304e+04												
						350.0	-12.63	202.66	29.77	12.77	5314.10	
1.243e+04												
3	23	7994.42	2.967e+04	-0.04	0.0	0.0	-870.32	65.57	161.60	-16.87	-2.689e+04	-
1.496e+04												
		-1.496e+04	-2.689e+04	-0.31	0.0	175.0	-774.24	65.57	161.60	-16.87	1393.75	-
3480.60												
						350.0	-678.16	65.57	161.60	-16.87	2.967e+04	
7994.42												
3	24	4515.80	3.782e+04	0.08	0.0	0.0	-837.68	-55.62	207.27	6.54	-3.472e+04	
4515.80												
		-1.495e+04	-3.472e+04	-0.38	0.0	175.0	-741.60	-55.62	207.27	6.54	1548.74	-
5218.08												
						350.0	-645.52	-55.62	207.27	6.54	3.782e+04	-
1.495e+04												
3	50	1.719e+04	2.006e+04	0.14	0.0	0.0	394.43	-111.82	-122.39	46.01	2.006e+04	
1.719e+04												
		-2.195e+04	-2.277e+04	0.28	0.0	175.0	468.34	-111.82	-122.39	46.01	-1356.18	-
2382.88												
						350.0	542.25	-111.82	-122.39	46.01	-2.277e+04	-
2.195e+04												
3	66	3.749e+04	8765.70	-0.22	0.0	0.0	-472.70	165.68	49.16	40.78	-8432.99	-
2.070e+04												
		-2.070e+04	-8432.99	-0.07	0.0	175.0	-398.79	165.68	49.16	40.78	166.36	
8392.47												
						350.0	-324.88	165.68	49.16	40.78	8765.70	
3.749e+04												
3	67	2.486e+04	2253.57	0.33	0.0	0.0	-1.80	-223.04	12.53	-12.71	-2141.55	
2.486e+04												
		-5.341e+04	-2141.55	-9.63e-03	0.0	175.0	72.11	-223.04	12.53	-12.71	56.01	-
1.428e+04												
						350.0	146.01	-223.04	12.53	-12.71	2253.57	-
5.341e+04												
3	69	509.37	4.138e+04	-0.03	0.0	0.0	-898.51	5.25	222.51	17.55	-3.651e+04	-
1378.82												
		-1378.82	-3.651e+04	-0.45	0.0	175.0	-824.60	5.25	222.51	17.55	2430.53	-
434.73												
						350.0	-750.69	5.25	222.51	17.55	4.138e+04	
509.37												
3	72	5533.36	2.594e+04	0.14	0.0	0.0	424.01	-62.60	-160.82	10.52	2.594e+04	
5533.36												
		-1.643e+04	-3.036e+04	0.37	0.0	175.0	497.92	-62.60	-160.82	10.52	-2208.17	-
5448.09												
						350.0	571.83	-62.60	-160.82	10.52	-3.036e+04	-
1.643e+04												
3	98	2.188e+04	7655.74	-0.13	0.0	0.0	-391.91	98.71	42.92	31.62	-7362.30	-
1.277e+04												
		-1.277e+04	-7362.30	-0.06	0.0	175.0	-318.00	98.71	42.92	31.62	146.72	
4554.94												
						350.0	-244.09	98.71	42.92	31.62	7655.74	
2.188e+04												
3	99	1.693e+04	3363.52	0.24	0.0	0.0	-82.59	-156.06	18.77	-3.54	-3212.23	
1.693e+04												
		-3.780e+04	-3212.23	-0.02	0.0	175.0	-8.68	-156.06	18.77	-3.54	75.65	-
1.044e+04												
						350.0	65.23	-156.06	18.77	-3.54	3363.52	-
3.780e+04												
3	101	-160.55	2.907e+04	2.37e-03	0.0	0.0	-671.62	-6.48	156.75	16.43	-2.579e+04	-
160.55												
		-2402.34	-2.579e+04	-0.31	0.0	175.0	-597.71	-6.48	156.75	16.43	1639.91	-
1281.45												
						350.0	-523.81	-6.48	156.75	16.43	2.907e+04	-
2402.34												
3	104	4315.09	1.522e+04	0.11	0.0	0.0	197.12	-50.87	-95.06	11.65	1.522e+04	
4315.09												
		-1.352e+04	-1.806e+04	0.23	0.0	175.0	271.03	-50.87	-95.06	11.65	-1417.55	-
4601.37												
						350.0	344.94	-50.87	-95.06	11.65	-1.806e+04	-
1.352e+04												
3	129	5757.12	1.989e+04	-0.03	0.0	0.0	-612.73	47.08	108.34	-11.14	-1.803e+04	-
1.072e+04												
		-1.072e+04	-1.803e+04	-0.21	0.0	175.0	-538.82	47.08	108.34	-11.14	932.39	-
2482.08												
						350.0	-464.92	47.08	108.34	-11.14	1.989e+04	
5757.12												
3	130	2259.68	2.532e+04	0.05	0.0	0.0	-590.97	-33.71	138.78	4.47	-2.325e+04	
2259.68												
		-9540.47	-2.325e+04	-0.26	0.0	175.0	-517.06	-33.71	138.78	4.47	1035.72	-
3640.40												
						350.0	-443.15	-33.71	138.78	4.47	2.532e+04	-
9540.47												
3	140	9579.66	1.312e+04	0.09	0.0	0.0	181.66	-66.13	-80.09	30.94	1.312e+04	
9579.66												
		-1.357e+04	-1.491e+04	0.19	0.0	175.0	255.57	-66.13	-80.09	30.94	-896.07	-
1992.78												
						350.0	329.47	-66.13	-80.09	30.94	-1.491e+04	-
1.357e+04												
3	149	6051.42	5702.89	0.06	0.0	0.0	-224.30	-47.47	31.92	14.86	-5468.56	
6051.42												
		-1.056e+04	-5468.56	-0.04	0.0	175.0	-150.39	-47.47	31.92	14.86	117.17	-
2255.06												
						350.0	-76.48	-47.47	31.92	14.86	5702.89	-
1.056e+04												

Viale Duca Alessandro n. 11 – 43123 Parma
Cell. 335 1403156 – E mail ing.concari@gmail.com
Sito web: studioaire.it – P.IVA 02561480340

3	153	4538.09	4898.68	-0.01	0.0	0.0	-325.91	37.83	26.80	-1.01	-4480.37	-
8701.05												
		-8701.05	-4480.37	-0.04	0.0	175.0	-252.01	37.83	26.80	-1.01	209.15	-
2081.48												
						350.0	-178.10	37.83	26.80	-1.01	4898.68	
4538.09												
3	154	1683.72	9243.26	0.05	0.0	0.0	-308.50	-26.81	51.15	11.47	-8659.64	
1683.72												
		-7699.98	-8659.64	-0.08	0.0	175.0	-234.60	-26.81	51.15	11.47	291.81	-
3008.13												
						350.0	-160.69	-26.81	51.15	11.47	9243.26	-
7699.98												
3	156	5199.35	928.38	0.06	0.0	0.0	-145.72	-41.50	5.86	16.20	-1124.14	
5199.35												
		-9326.56	-1124.14	8.92e-03	0.0	175.0	-71.81	-41.50	5.86	16.20	-97.88	-
2063.60												
						350.0	2.10	-41.50	5.86	16.20	928.38	-
9326.56												
3	160	4753.32	5159.82	0.06	0.0	0.0	-226.47	-39.39	28.87	13.30	-4946.15	
4753.32												
		-9031.78	-4946.15	-0.04	0.0	175.0	-152.57	-39.39	28.87	13.30	106.83	-
2139.23												
						350.0	-78.66	-39.39	28.87	13.30	5159.82	-
9031.78												
3	161	4277.99	1165.05	-7.65e-03	0.0	0.0	-254.66	35.96	6.49	1.55	-1108.01	-
8307.49												
		-8307.49	-1108.01	1.54e-03	0.0	175.0	-180.75	35.96	6.49	1.55	28.52	-
2014.75												
						350.0	-106.84	35.96	6.49	1.55	1165.05	
4277.99												
3	162	2077.27	5509.63	0.05	0.0	0.0	-237.25	-28.68	30.85	14.04	-5287.27	
2077.27												
		-7960.09	-5287.27	-0.04	0.0	175.0	-163.34	-28.68	30.85	14.04	111.18	-
2941.41												
						350.0	-89.43	-28.68	30.85	14.04	5509.63	-
7960.09												
4	26	2.059e+04	1.838e+04	0.08	0.0	0.0	-164.52	-122.66	90.56	22.93	-1.332e+04	
2.059e+04												
		-2.234e+04	-1.332e+04	-0.22	0.0	175.0	-90.62	-122.66	90.56	22.93	2530.80	-
871.42												
						350.0	-16.71	-122.66	90.56	22.93	1.838e+04	-
2.234e+04												
4	27	4330.55	1.673e+04	-0.04	0.0	0.0	6.00	-10.74	82.48	27.97	-1.214e+04	
4330.55												
		571.62	-1.214e+04	-0.21	0.0	175.0	79.90	-10.74	82.48	27.97	2293.50	
2451.08												
						350.0	153.81	-10.74	82.48	27.97	1.673e+04	
571.62												
4	46	2.853e+04	1.516e+04	0.14	0.0	0.0	-740.13	-159.00	-100.53	-35.75	1.516e+04	
2.853e+04												
		-2.712e+04	-2.002e+04	0.23	0.0	175.0	-644.05	-159.00	-100.53	-35.75	-2432.34	
709.61												
						350.0	-547.97	-159.00	-100.53	-35.75	-2.002e+04	-
2.712e+04												
4	47	1.227e+04	1.634e+04	0.02	0.0	0.0	-569.61	-47.08	-108.61	-30.71	1.634e+04	
1.227e+04												
		-4206.27	-2.168e+04	0.24	0.0	175.0	-473.53	-47.08	-108.61	-30.71	-2669.64	
4032.11												
						350.0	-377.45	-47.08	-108.61	-30.71	-2.168e+04	-
4206.27												
4	48	3.176e+04	1.551e+04	0.14	0.0	0.0	-737.14	-168.28	-102.57	-35.37	1.551e+04	
3.176e+04												
		-2.714e+04	-2.039e+04	0.23	0.0	175.0	-641.06	-168.28	-102.57	-35.37	-2440.27	
2308.16												
						350.0	-544.98	-168.28	-102.57	-35.37	-2.039e+04	-
2.714e+04												
4	61	2.799e+04	4350.91	-0.21	0.0	0.0	79.75	91.07	19.69	16.24	-2543.86	-
4085.89												
		-4085.89	-2543.86	-0.10	0.0	175.0	153.66	91.07	19.69	16.24	903.53	
1.195e+04												
						350.0	227.57	91.07	19.69	16.24	4350.91	
2.799e+04												
4	64	3.702e+04	3566.62	0.32	0.0	0.0	-722.87	-263.39	-24.44	-20.63	3566.62	
3.702e+04												
		-5.536e+04	-4990.29	0.09	0.0	175.0	-648.96	-263.39	-24.44	-20.63	-711.84	-
9168.73												
						350.0	-575.05	-263.39	-24.44	-20.63	-4990.29	-
5.536e+04												
4	67	3.915e+04	8130.91	0.33	0.0	0.0	-580.62	-280.03	39.64	-25.24	-5753.59	
3.915e+04												
		-5.907e+04	-5753.59	-0.06	0.0	175.0	-506.71	-280.03	39.64	-25.24	1188.66	-
9962.65												
						350.0	-432.80	-280.03	39.64	-25.24	8130.91	-
5.907e+04												
4	70	8293.04	1.792e+04	-0.01	0.0	0.0	-497.19	-22.31	-121.29	-6.91	1.792e+04	
8293.04												
		551.52	-2.455e+04	0.26	0.0	175.0	-423.28	-22.31	-121.29	-6.91	-3311.89	
4422.28												
						350.0	-349.37	-22.31	-121.29	-6.91	-2.455e+04	
551.52												
4	71	2.464e+04	2.391e+04	0.11	0.0	0.0	-145.93	-150.00	116.54	2.52	-1.690e+04	
2.464e+04												
		-2.792e+04	-1.690e+04	-0.27	0.0	175.0	-72.02	-150.00	116.54	2.52	3503.58	-
1639.92												
						350.0	1.89	-150.00	116.54	2.52	2.391e+04	-
2.792e+04												
4	93	1.367e+04	2751.32	-0.12	0.0	0.0	-58.05	29.97	12.13	9.92	-1496.35	
3082.60												

Viale Duca Alessandro n. 11 – 43123 Parma
Cell. 335 1403156 – E mail ing.concari@gmail.com
Sito web: studioaire.it – P.IVA 02561480340

		3082.60	-1496.35	-0.07	0.0	175.0	15.85	29.97	12.13	9.92	627.49	
8378.22												
						350.0	89.76	29.97	12.13	9.92	2751.32	
1.367e+04												
4	96	2.985e+04	2519.11	0.23	0.0	0.0	-585.06	-202.28	-16.88	-14.31	2519.11	
2.985e+04												
		-4.105e+04	-3390.70	0.06	0.0	175.0	-511.15	-202.28	-16.88	-14.31	-435.79	-
5595.86												
						350.0	-437.24	-202.28	-16.88	-14.31	-3390.70	-
4.105e+04												
4	99	3.125e+04	5232.22	0.24	0.0	0.0	-491.59	-213.22	25.22	-17.35	-3599.54	
3.125e+04												
		-4.349e+04	-3599.54	-0.04	0.0	175.0	-417.68	-213.22	25.22	-17.35	816.34	-
6118.46												
						350.0	-343.78	-213.22	25.22	-17.35	5232.22	-
4.349e+04												
4	102	1.114e+04	1.195e+04	0.02	0.0	0.0	-437.09	-44.32	-80.52	-5.27	1.195e+04	
1.114e+04												
		-4340.51	-1.624e+04	0.17	0.0	175.0	-363.19	-44.32	-80.52	-5.27	-2148.12	
3398.19												
						350.0	-289.28	-44.32	-80.52	-5.27	-1.624e+04	-
4340.51												
4	103	2.180e+04	1.560e+04	0.09	0.0	0.0	-206.02	-127.99	75.77	0.88	-1.092e+04	
2.180e+04												
		-2.303e+04	-1.092e+04	-0.18	0.0	175.0	-132.11	-127.99	75.77	0.88	2339.82	-
615.83												
						350.0	-58.20	-127.99	75.77	0.88	1.560e+04	-
2.303e+04												
4	128	1.514e+04	1.199e+04	0.05	0.0	0.0	-187.65	-87.18	58.90	15.31	-8626.85	
1.514e+04												
		-1.537e+04	-8626.85	-0.14	0.0	175.0	-113.75	-87.18	58.90	15.31	1679.88	-
115.23												
						350.0	-39.84	-87.18	58.90	15.31	1.199e+04	-
1.537e+04												
4	129	4298.41	1.089e+04	-0.03	0.0	0.0	-73.97	-12.56	53.51	18.67	-7841.89	
4298.41												
		-98.87	-7841.89	-0.14	0.0	175.0	-0.07	-12.56	53.51	18.67	1521.68	
2099.77												
						350.0	73.84	-12.56	53.51	18.67	1.089e+04	-
98.87												
4	140	1.959e+04	1.021e+04	0.09	0.0	0.0	-524.61	-108.16	-67.61	-23.82	1.021e+04	
1.959e+04												
		-1.827e+04	-1.346e+04	0.15	0.0	175.0	-450.70	-108.16	-67.61	-23.82	-1624.48	
659.36												
						350.0	-376.79	-108.16	-67.61	-23.82	-1.346e+04	-
1.827e+04												
4	141	8744.88	1.099e+04	0.01	0.0	0.0	-410.93	-33.55	-73.00	-20.46	1.099e+04	
8744.88												
		-2996.16	-1.456e+04	0.16	0.0	175.0	-337.02	-33.55	-73.00	-20.46	-1782.69	
2874.36												
						350.0	-263.11	-33.55	-73.00	-20.46	-1.456e+04	-
2996.16												
4	142	2.174e+04	1.044e+04	0.09	0.0	0.0	-522.62	-114.35	-68.97	-23.57	1.044e+04	
2.174e+04												
		-1.829e+04	-1.370e+04	0.15	0.0	175.0	-448.71	-114.35	-68.97	-23.57	-1629.77	
1725.06												
						350.0	-374.80	-114.35	-68.97	-23.57	-1.370e+04	-
1.829e+04												
4	150	1.777e+04	456.15	0.06	0.0	0.0	-332.73	-94.24	-1.97	-2.51	456.15	
1.777e+04												
		-1.522e+04	-233.87	-3.11e-03	0.0	175.0	-258.82	-94.24	-1.97	-2.51	111.14	
1276.25												
						350.0	-184.91	-94.24	-1.97	-2.51	-233.87	-
1.522e+04												
4	153	5658.90	1379.03	-0.01	0.0	0.0	-200.62	-19.55	6.26	3.96	-812.43	
5658.90												
		-1182.90	-812.43	-0.03	0.0	175.0	-126.71	-19.55	6.26	3.96	283.30	
2238.00												
						350.0	-52.80	-19.55	6.26	3.96	1379.03	-
1182.90												
4	156	1.510e+04	2313.07	0.06	0.0	0.0	-359.07	-83.08	-14.65	-6.57	2313.07	
1.510e+04												
		-1.398e+04	-2814.50	0.03	0.0	175.0	-285.16	-83.08	-14.65	-6.57	-250.71	
560.02												
						350.0	-211.25	-83.08	-14.65	-6.57	-2814.50	-
1.398e+04												
4	157	6548.20	2954.34	-6.45e-03	0.0	0.0	-268.01	-23.74	-19.04	-3.87	2954.34	
6548.20												
		-1762.36	-3709.49	0.03	0.0	175.0	-194.10	-23.74	-19.04	-3.87	-377.58	
2392.92												
						350.0	-120.19	-23.74	-19.04	-3.87	-3709.49	-
1762.36												
4	160	1.463e+04	311.98	0.06	0.0	0.0	-323.26	-80.85	-1.21	-2.41	311.98	
1.463e+04												
		-1.367e+04	-111.22	-2.72e-03	0.0	175.0	-249.36	-80.85	-1.21	-2.41	100.38	
477.72												
						350.0	-175.45	-80.85	-1.21	-2.41	-111.22	-
1.367e+04												
4	161	6075.76	953.24	-8.48e-03	0.0	0.0	-232.21	-21.52	-5.60	0.29	953.24	
6075.76												
		-1454.52	-1006.22	2.31e-03	0.0	175.0	-158.30	-21.52	-5.60	0.29	-26.49	
2310.62												
						350.0	-84.39	-21.52	-5.60	0.29	-1006.22	-
1454.52												
4	162	1.647e+04	511.38	0.05	0.0	0.0	-321.56	-86.16	-2.37	-2.19	511.38	
1.647e+04												
		-1.369e+04	-319.69	-2.55e-03	0.0	175.0	-247.65	-86.16	-2.37	-2.19	95.85	
1391.18												

Viale Duca Alessandro n. 11 – 43123 Parma
Cell. 335 1403156 – E mail ing.concari@gmail.com
Sito web: studioaire.it – P.IVA 02561480340

						350.0	-173.74	-86.16	-2.37	-2.19	-319.69 -
1.369e+04											
12	16	8.640e+04	5.158e+04	0.12	0.0	0.0	-4057.91	-669.11	313.34	62.13	-5.809e+04
8.640e+04											
		-1.478e+05	-5.809e+04	-0.47	0.0	175.0	-3961.83	-669.11	313.34	62.13	-3253.39 -
3.070e+04											
						350.0	-3865.75	-669.11	313.34	62.13	5.158e+04 -
1.478e+05											
12	25	2.790e+04	8.394e+04	0.03	0.0	0.0	-1169.59	-241.77	509.57	89.90	-9.441e+04
2.790e+04											
		-5.672e+04	-9.441e+04	-0.76	0.0	175.0	-1095.68	-241.77	509.57	89.90	-5235.46 -
1.441e+04											
						350.0	-1021.78	-241.77	509.57	89.90	8.394e+04 -
5.672e+04											
12	36	8.559e+04	6.382e+04	0.12	0.0	0.0	-5354.27	-668.22	-345.16	-51.95	6.382e+04
8.559e+04											
		-1.483e+05	-5.699e+04	0.51	0.0	175.0	-5258.19	-668.22	-345.16	-51.95	3414.85 -
3.135e+04											
						350.0	-5162.11	-668.22	-345.16	-51.95	-5.699e+04 -
1.483e+05											
12	47	5.417e+04	1.096e+05	0.06	0.0	0.0	-5220.75	-487.23	-592.17	-99.12	1.096e+05
5.417e+04											
		-1.164e+05	-9.768e+04	0.88	0.0	175.0	-5124.67	-487.23	-592.17	-99.12	5950.25 -
3.110e+04											
						350.0	-5028.59	-487.23	-592.17	-99.12	-9.768e+04 -
1.164e+05											
12	67	2.082e+05	6.443e+04	0.58	0.0	0.0	-3050.32	-1154.04	388.44	-13.95	-7.153e+04
2.082e+05											
		-1.957e+05	-7.153e+04	-0.57	0.0	175.0	-2976.42	-1154.04	388.44	-13.95	-3548.25
6225.01											
						350.0	-2902.51	-1154.04	388.44	-13.95	6.443e+04 -
1.957e+05											
12	77	1.025e+05	1.504e+05	0.22	0.0	0.0	-1377.32	-653.74	905.63	94.35	-1.666e+05
1.025e+05											
		-1.263e+05	-1.666e+05	-1.33	0.0	175.0	-1303.42	-653.74	905.63	94.35	-8116.57 -
1.189e+04											
						350.0	-1229.51	-653.74	905.63	94.35	1.504e+05 -
1.263e+05											
12	78	-328.87	1.907e+05	-0.40	0.0	0.0	-4140.30	215.78	-1037.41	-33.40	1.907e+05 -
7.586e+04											
		-7.586e+04	-1.723e+05	1.52	0.0	175.0	-4066.39	215.78	-1037.41	-33.40	9200.85 -
3.810e+04											
						350.0	-3992.48	215.78	-1037.41	-33.40	-1.723e+05 -
328.87											
12	79	1.769e+05	1.727e+05	0.47	0.0	0.0	-1704.05	-1010.38	1040.45	42.76	-1.915e+05
1.769e+05											
		-1.767e+05	-1.915e+05	-1.53	0.0	175.0	-1630.14	-1010.38	1040.45	42.76	-9383.28
115.64											
						350.0	-1556.23	-1010.38	1040.45	42.76	1.727e+05 -
1.767e+05											
12	80	-1437.24	1.659e+05	-0.14	0.0	0.0	-4467.02	-140.86	-902.59	-84.99	1.659e+05 -
1437.24											
		-5.074e+04	-1.500e+05	1.32	0.0	175.0	-4393.11	-140.86	-902.59	-84.99	7934.14 -
2.609e+04											
						350.0	-4319.20	-140.86	-902.59	-84.99	-1.500e+05 -
5.074e+04											
12	99	1.542e+05	4.244e+04	0.39	0.0	0.0	-3006.10	-895.00	256.02	-7.57	-4.717e+04
1.542e+05											
		-1.590e+05	-4.717e+04	-0.38	0.0	175.0	-2932.19	-895.00	256.02	-7.57	-2365.13 -
2401.77											
						350.0	-2858.28	-895.00	256.02	-7.57	4.244e+04 -
1.590e+05											
12	109	8.472e+04	9.896e+04	0.16	0.0	0.0	-1906.72	-565.99	596.19	63.67	-1.097e+05
8.472e+04											
		-1.134e+05	-1.097e+05	-0.88	0.0	175.0	-1832.81	-565.99	596.19	63.67	-5369.94 -
1.432e+04											
						350.0	-1758.91	-565.99	596.19	63.67	9.896e+04 -
1.134e+05											
12	110	-3.052e+04	1.253e+05	-0.25	0.0	0.0	-3723.73	5.94	-681.83	-20.37	1.253e+05 -
3.260e+04											
		-3.260e+04	-1.133e+05	1.00	0.0	175.0	-3649.82	5.94	-681.83	-20.37	6020.76 -
3.156e+04											
						350.0	-3575.91	5.94	-681.83	-20.37	-1.133e+05 -
3.052e+04											
12	111	1.337e+05	1.136e+05	0.32	0.0	0.0	-2120.62	-800.53	684.87	29.73	-1.261e+05
1.337e+05											
		-1.465e+05	-1.261e+05	-1.01	0.0	175.0	-2046.71	-800.53	684.87	29.73	-6203.19 -
6422.42											
						350.0	-1972.80	-800.53	684.87	29.73	1.136e+05 -
1.465e+05											
12	112	1.635e+04	1.090e+05	-0.08	0.0	0.0	-3937.62	-228.61	-593.16	-54.31	1.090e+05
1.635e+04											
		-6.366e+04	-9.861e+04	0.87	0.0	175.0	-3863.71	-228.61	-593.16	-54.31	5187.51 -
2.366e+04											
						350.0	-3789.81	-228.61	-593.16	-54.31	-9.861e+04 -
6.366e+04											
12	126	6.123e+04	3.427e+04	0.09	0.0	0.0	-2996.25	-478.22	208.24	41.53	-3.861e+04
6.123e+04											
		-1.061e+05	-3.861e+04	-0.31	0.0	175.0	-2922.35	-478.22	208.24	41.53	-2172.38 -
2.245e+04											
						350.0	-2848.44	-478.22	208.24	41.53	3.427e+04 -
1.061e+05											
12	127	2.769e+04	5.567e+04	0.03	0.0	0.0	-1507.19	-241.53	338.09	60.19	-6.266e+04
2.769e+04											
		-5.685e+04	-6.266e+04	-0.51	0.0	175.0	-1433.28	-241.53	338.09	60.19	-3498.95 -
1.458e+04											
						350.0	-1359.37	-241.53	338.09	60.19	5.567e+04 -
5.685e+04											

Viale Duca Alessandro n. 11 – 43123 Parma
Cell. 335 1403156 – E mail ing.concari@gmail.com
Sito web: studioaire.it – P.IVA 02561480340

12	136	6.069e+04	4.266e+04	0.08	0.0	0.0	-3860.50	-477.62	-230.76	-34.53	4.266e+04	6.069e+04
		-1.065e+05	-3.811e+04	0.34	0.0	175.0	-3786.59	-477.62	-230.76	-34.53	2273.11	- 2.289e+04
						350.0	-3712.68	-477.62	-230.76	-34.53	-3.811e+04	- 1.065e+05
12	141	3.975e+04	7.316e+04	0.04	0.0	0.0	-3771.49	-356.96	-395.43	-65.98	7.316e+04	3.975e+04
		-8.519e+04	-6.524e+04	0.59	0.0	175.0	-3697.58	-356.96	-395.43	-65.98	3963.38	- 2.272e+04
						350.0	-3623.67	-356.96	-395.43	-65.98	-6.524e+04	- 8.519e+04
12	146	5.239e+04	135.99	0.07	0.0	0.0	-3039.87	-413.93	1.25	4.77	-303.23	5.239e+04
		-9.249e+04	-303.23	-3.42e-03	0.0	175.0	-2965.96	-413.93	1.25	4.77	-83.62	- 2.005e+04
						350.0	-2892.06	-413.93	1.25	4.77	135.99	- 9.249e+04
12	151	2.735e+04	1.043e+04	0.03	0.0	0.0	-2047.34	-241.16	63.71	12.65	-1.187e+04	2.735e+04
		-5.705e+04	-1.187e+04	-0.10	0.0	175.0	-1973.43	-241.16	63.71	12.65	-720.51	- 1.485e+04
						350.0	-1899.52	-241.16	63.71	12.65	1.043e+04	- 5.705e+04
12	157	3.828e+04	1.554e+04	0.04	0.0	0.0	-3041.61	-340.75	-84.21	-12.19	1.554e+04	3.828e+04
		-8.099e+04	-1.393e+04	0.12	0.0	175.0	-2967.71	-340.75	-84.21	-12.19	806.89	- 2.135e+04
						350.0	-2893.80	-340.75	-84.21	-12.19	-1.393e+04	- 8.099e+04
12	158	5.044e+04	1.403e+04	0.07	0.0	0.0	-3075.21	-397.19	-76.22	-8.79	1.403e+04	5.044e+04
		-8.858e+04	-1.264e+04	0.11	0.0	175.0	-3001.31	-397.19	-76.22	-8.79	696.01	- 1.907e+04
						350.0	-2927.40	-397.19	-76.22	-8.79	-1.264e+04	- 8.858e+04
12	159	2.727e+04	828.56	0.03	0.0	0.0	-2182.38	-241.07	-4.88	0.76	828.56	2.727e+04
		-5.710e+04	-880.37	5.67e-03	0.0	175.0	-2108.47	-241.07	-4.88	0.76	-25.91	- 1.492e+04
						350.0	-2034.56	-241.07	-4.88	0.76	-880.37	- 5.710e+04
12	161	3.837e+04	1151.44	0.04	0.0	0.0	-2888.57	-340.86	-6.47	1.28	1151.44	3.837e+04
		-8.093e+04	-1112.10	8.67e-03	0.0	175.0	-2814.66	-340.86	-6.47	1.28	19.67	- 2.128e+04
						350.0	-2740.76	-340.86	-6.47	1.28	-1112.10	- 8.093e+04
12	162	5.054e+04	174.61	0.07	0.0	0.0	-2922.17	-397.30	1.52	4.68	-357.04	5.054e+04
		-8.852e+04	-357.04	-3.93e-03	0.0	175.0	-2848.26	-397.30	1.52	4.68	-91.22	- 1.899e+04
						350.0	-2774.36	-397.30	1.52	4.68	174.61	- 8.852e+04
13	24	4.487e+04	8.714e+04	0.10	0.0	0.0	-3652.58	-272.86	526.49	-17.93	-9.713e+04	4.487e+04
		-5.063e+04	-9.713e+04	-0.78	0.0	175.0	-3556.50	-272.86	526.49	-17.93	-4996.73	- 2875.46
						350.0	-3460.42	-272.86	526.49	-17.93	8.714e+04	- 5.063e+04
13	26	3.826e+04	8.747e+04	0.11	0.0	0.0	-2609.99	-212.70	529.26	-19.06	-9.778e+04	3.826e+04
		-3.619e+04	-9.778e+04	-0.79	0.0	175.0	-2536.08	-212.70	529.26	-19.06	-5153.99	1035.23
						350.0	-2462.17	-212.70	529.26	-19.06	8.747e+04	- 3.619e+04
13	36	5.220e+04	6.303e+04	0.12	0.0	0.0	-2235.51	-319.43	-338.57	26.53	6.303e+04	5.220e+04
		-5.960e+04	-5.547e+04	0.51	0.0	175.0	-2139.43	-319.43	-338.57	26.53	3780.34	- 3696.80
						350.0	-2043.35	-319.43	-338.57	26.53	-5.547e+04	- 5.960e+04
13	47	1.518e+04	1.088e+05	0.02	0.0	0.0	-1059.39	-124.53	-585.55	31.63	1.088e+05	1.518e+04
		-2.841e+04	-9.616e+04	0.88	0.0	175.0	-963.31	-124.53	-585.55	31.63	6313.78	- 6613.30
						350.0	-867.23	-124.53	-585.55	31.63	-9.616e+04	- 2.841e+04
13	49	8562.34	1.081e+05	0.01	0.0	0.0	-16.80	-64.37	-582.77	30.50	1.081e+05	8562.34
		-1.397e+04	-9.583e+04	0.88	0.0	175.0	57.10	-64.37	-582.77	30.50	6156.52	- 2702.61
						350.0	131.01	-64.37	-582.77	30.50	-9.583e+04	- 1.397e+04
13	62	9.690e+04	5.738e+04	-0.47	0.0	0.0	-34.19	670.69	-310.91	42.06	5.738e+04	- 1.378e+05
		-1.378e+05	-5.144e+04	0.46	0.0	175.0	39.72	670.69	-310.91	42.06	2971.57	- 2.047e+04
						350.0	113.63	670.69	-310.91	42.06	-5.144e+04	9.690e+04
13	63	1.925e+05	5.408e+04	0.59	0.0	0.0	-3545.95	-1010.66	323.79	-32.67	-5.925e+04	1.925e+05
		-1.612e+05	-5.925e+04	-0.47	0.0	175.0	-3472.04	-1010.66	323.79	-32.67	-2585.72	1.562e+04
						350.0	-3398.13	-1010.66	323.79	-32.67	5.408e+04	- 1.612e+05
13	68	2.152e+05	3.509e+04	0.66	0.0	0.0	-2868.58	-1128.22	-189.46	4.22	3.509e+04	2.152e+05

Viale Duca Alessandro n. 11 – 43123 Parma
Cell. 335 1403156 – E mail ing.concari@gmail.com
Sito web: studioaire.it – P.IVA 02561480340

		-1.796e+05	-3.122e+04	0.28	0.0	175.0	-2794.67	-1128.22	-189.46	4.22	1930.72	
1.780e+04												
						350.0	-2720.76	-1128.22	-189.46	4.22	-3.122e+04	-
1.796e+05												
13	78	5.137e+04	1.901e+05	0.13	0.0	0.0	-315.41	-297.16	-1032.24	132.16	1.901e+05	
5.137e+04												
		-5.264e+04	-1.712e+05	1.52	0.0	175.0	-241.50	-297.16	-1032.24	132.16	9483.19	-
635.33												
						350.0	-167.59	-297.16	-1032.24	132.16	-1.712e+05	-
5.264e+04												
13	79	3276.44	1.738e+05	-0.01	0.0	0.0	-3264.73	-42.81	1045.12	-122.77	-1.920e+05	
3276.44												
		-1.171e+04	-1.920e+05	-1.53	0.0	175.0	-3190.82	-42.81	1045.12	-122.77	-9097.35	-
4215.20												
						350.0	-3116.91	-42.81	1045.12	-122.77	1.738e+05	-
1.171e+04												
13	94	5.272e+04	3.742e+04	-0.29	0.0	0.0	-635.35	382.96	-202.29	29.27	3.742e+04	-
8.132e+04												
		-8.132e+04	-3.338e+04	0.30	0.0	175.0	-561.44	382.96	-202.29	29.27	2020.63	-
1.430e+04												
						350.0	-487.54	382.96	-202.29	29.27	-3.338e+04	
5.272e+04												
13	95	1.360e+05	3.602e+04	0.41	0.0	0.0	-2944.79	-722.93	215.18	-19.88	-3.929e+04	
1.360e+05												
		-1.171e+05	-3.929e+04	-0.31	0.0	175.0	-2870.88	-722.93	215.18	-19.88	-1634.79	
9447.42												
						350.0	-2796.97	-722.93	215.18	-19.88	3.602e+04	-
1.171e+05												
13	100	1.509e+05	2.276e+04	0.45	0.0	0.0	-2499.26	-800.23	-122.41	4.38	2.276e+04	
1.509e+05												
		-1.292e+05	-2.009e+04	0.19	0.0	175.0	-2425.35	-800.23	-122.41	4.38	1335.95	
1.088e+04												
						350.0	-2351.45	-800.23	-122.41	4.38	-2.009e+04	-
1.292e+05												
13	110	4.314e+04	1.247e+05	0.11	0.0	0.0	-820.19	-253.64	-676.74	88.53	1.247e+05	
4.314e+04												
		-4.564e+04	-1.121e+05	1.00	0.0	175.0	-746.28	-253.64	-676.74	88.53	6303.71	-
1248.42												
						350.0	-672.38	-253.64	-676.74	88.53	-1.121e+05	-
4.564e+04												
13	111	1.150e+04	1.148e+05	0.02	0.0	0.0	-2759.95	-86.32	689.62	-79.14	-1.266e+05	
1.150e+04												
		-1.871e+04	-1.266e+05	-1.01	0.0	175.0	-2686.04	-86.32	689.62	-79.14	-5917.87	-
3602.11												
						350.0	-2612.13	-86.32	689.62	-79.14	1.148e+05	-
1.871e+04												
13	128	2.720e+04	5.840e+04	0.07	0.0	0.0	-2130.82	-157.24	352.84	-12.45	-6.510e+04	
2.720e+04												
		-2.783e+04	-6.510e+04	-0.52	0.0	175.0	-2056.92	-157.24	352.84	-12.45	-3349.82	-
315.66												
						350.0	-1983.01	-157.24	352.84	-12.45	5.840e+04	-
2.783e+04												
13	130	3.060e+04	5.813e+04	0.07	0.0	0.0	-2591.39	-188.08	350.99	-11.85	-6.472e+04	
3.060e+04												
		-3.523e+04	-6.472e+04	-0.52	0.0	175.0	-2517.48	-188.08	350.99	-11.85	-3296.68	-
2319.30												
						350.0	-2443.57	-188.08	350.99	-11.85	5.813e+04	-
3.523e+04												
13	136	3.548e+04	4.205e+04	0.08	0.0	0.0	-1646.67	-219.13	-225.72	17.79	4.205e+04	
3.548e+04												
		-4.121e+04	-3.695e+04	0.34	0.0	175.0	-1572.76	-219.13	-225.72	17.79	2554.69	-
2866.86												
						350.0	-1498.86	-219.13	-225.72	17.79	-3.695e+04	-
4.121e+04												
13	139	7404.92	7.218e+04	0.01	0.0	0.0	-402.03	-58.36	-388.52	20.59	7.218e+04	
7404.92												
		-1.302e+04	-6.380e+04	0.59	0.0	175.0	-328.13	-58.36	-388.52	20.59	4190.52	-
2807.56												
						350.0	-254.22	-58.36	-388.52	20.59	-6.380e+04	-
1.302e+04												
13	141	1.080e+04	7.256e+04	0.01	0.0	0.0	-862.59	-89.20	-390.37	21.19	7.256e+04	
1.080e+04												
		-2.042e+04	-6.407e+04	0.59	0.0	175.0	-788.69	-89.20	-390.37	21.19	4243.66	-
4811.20												
						350.0	-714.78	-89.20	-390.37	21.19	-6.407e+04	-
2.042e+04												
13	150	2.974e+04	1481.87	0.07	0.0	0.0	-1817.92	-182.14	7.44	5.12	-1123.81	
2.974e+04												
		-3.401e+04	-1123.81	-6.07e-03	0.0	175.0	-1744.01	-182.14	7.44	5.12	179.03	-
2136.56												
						350.0	-1670.11	-182.14	7.44	5.12	1481.87	-
3.401e+04												
13	152	2.400e+04	1.286e+04	0.06	0.0	0.0	-1531.27	-141.43	76.59	0.68	-1.395e+04	
2.400e+04												
		-2.549e+04	-1.395e+04	-0.11	0.0	175.0	-1457.36	-141.43	76.59	0.68	-546.50	-
744.90												
						350.0	-1383.45	-141.43	76.59	0.68	1.286e+04	-
2.549e+04												
13	154	2.691e+04	1.262e+04	0.06	0.0	0.0	-1926.03	-167.86	75.00	1.20	-1.363e+04	
2.691e+04												
		-3.184e+04	-1.363e+04	-0.11	0.0	175.0	-1852.13	-167.86	75.00	1.20	-500.96	-
2462.30												
						350.0	-1778.22	-167.86	75.00	1.20	1.262e+04	-
3.184e+04												
13	155	5553.06	1.464e+04	6.16e-03	0.0	0.0	-1018.40	-48.73	-77.71	4.73	1.464e+04	
5553.06												
		-1.150e+04	-1.255e+04	0.12	0.0	175.0	-944.50	-48.73	-77.71	4.73	1044.92	-
2975.48												

Viale Duca Alessandro n. 11 – 43123 Parma
Cell. 335 1403156 – E mail ing.concari@gmail.com
Sito web: studioaire.it – P.IVA 02561480340

						350.0	-870.59	-48.73	-77.71	4.73	-1.255e+04	-
1.150e+04												
13	157	8461.63	1.497e+04	9.18e-03	0.0	0.0	-1413.17	-75.17	-79.30	5.24	1.497e+04	
8461.63												
		-1.785e+04	-1.279e+04	0.12	0.0	175.0	-1339.26	-75.17	-79.30	5.24	1090.47	-
4692.88												
						350.0	-1265.35	-75.17	-79.30	5.24	-1.279e+04	-
1.785e+04												
13	159	5090.09	259.76	5.27e-03	0.0	0.0	-1172.50	-46.33	-7.05e-03	0.76	259.76	
5090.09												
		-1.113e+04	257.29	5.65e-03	0.0	175.0	-1098.59	-46.33	-7.05e-03	0.76	258.53	-
3017.46												
						350.0	-1024.68	-46.33	-7.05e-03	0.76	257.29	-
1.113e+04												
13	160	2.441e+04	1552.16	0.06	0.0	0.0	-1395.30	-143.55	8.03	4.18	-1257.41	
2.441e+04												
		-2.583e+04	-1257.41	-7.31e-03	0.0	175.0	-1321.40	-143.55	8.03	4.18	147.38	-
707.86												
						350.0	-1247.49	-143.55	8.03	4.18	1552.16	-
2.583e+04												
13	162	2.732e+04	1320.01	0.06	0.0	0.0	-1790.07	-169.98	6.44	4.70	-934.16	
2.732e+04												
		-3.217e+04	-934.16	-4.62e-03	0.0	175.0	-1716.16	-169.98	6.44	4.70	192.92	-
2425.26												
						350.0	-1642.25	-169.98	6.44	4.70	1320.01	-
3.217e+04												
14	15	3.452e+04	5.349e+04	-0.03	0.0	0.0	-3395.12	154.75	317.56	4.54	-5.765e+04	-
1.964e+04												
		-1.964e+04	-5.765e+04	-0.45	0.0	175.0	-3299.04	154.75	317.56	4.54	-2077.71	
7440.77												
						350.0	-3202.96	154.75	317.56	4.54	5.349e+04	
3.452e+04												
14	23	3.039e+04	8.975e+04	-0.03	0.0	0.0	-3693.30	138.58	532.26	5.68	-9.654e+04	-
1.812e+04												
		-1.812e+04	-9.654e+04	-0.75	0.0	175.0	-3597.22	138.58	532.26	5.68	-3398.59	
6135.52												
						350.0	-3501.14	138.58	532.26	5.68	8.975e+04	
3.039e+04												
14	26	2.654e+04	9.738e+04	0.11	0.0	0.0	-2381.44	-112.52	576.35	10.89	-1.043e+05	
2.654e+04												
		-1.284e+04	-1.043e+05	-0.81	0.0	175.0	-2307.53	-112.52	576.35	10.89	-3480.22	
6848.63												
						350.0	-2233.62	-112.52	576.35	10.89	9.738e+04	-
1.284e+04												
14	47	2.491e+04	1.105e+05	-0.01	0.0	0.0	-485.54	103.85	-609.73	-2.43	1.105e+05	-
1.143e+04												
		-1.143e+04	-1.029e+05	0.86	0.0	175.0	-389.46	103.85	-609.73	-2.43	3757.51	
6740.78												
						350.0	-293.38	103.85	-609.73	-2.43	-1.029e+05	
2.491e+04												
14	50	3.322e+04	1.027e+05	0.13	0.0	0.0	826.33	-147.25	-565.64	2.78	1.027e+05	
3.322e+04												
		-1.832e+04	-9.531e+04	0.80	0.0	175.0	900.24	-147.25	-565.64	2.78	3675.88	
7453.89												
						350.0	974.15	-147.25	-565.64	2.78	-9.531e+04	-
1.832e+04												
14	65	1.518e+05	3.439e+04	-0.54	0.0	0.0	-3543.76	944.80	204.56	10.85	-3.718e+04	-
1.789e+05												
		-1.789e+05	-3.718e+04	-0.37	0.0	175.0	-3469.86	944.80	204.56	10.85	-1393.95	-
1.353e+04												
						350.0	-3395.95	944.80	204.56	10.85	3.439e+04	
1.518e+05												
14	68	1.970e+05	2.982e+04	0.66	0.0	0.0	734.71	-971.90	-163.55	-1.56	2.982e+04	
1.970e+05												
		-1.432e+05	-2.740e+04	0.31	0.0	175.0	808.62	-971.90	-163.55	-1.56	1207.35	
2.693e+04												
						350.0	882.52	-971.90	-163.55	-1.56	-2.740e+04	-
1.432e+05												
14	70	3.937e+04	1.396e+05	-0.08	0.0	0.0	282.56	214.44	-770.73	21.43	1.396e+05	-
3.567e+04												
		-3.567e+04	-1.301e+05	1.02	0.0	175.0	356.46	214.44	-770.73	21.43	4742.43	
1849.21												
						350.0	430.37	214.44	-770.73	21.43	-1.301e+05	
3.937e+04												
14	71	5.381e+04	1.371e+05	0.20	0.0	0.0	-3091.61	-241.53	811.75	-12.14	-1.470e+05	
5.381e+04												
		-3.072e+04	-1.470e+05	-1.08	0.0	175.0	-3017.70	-241.53	811.75	-12.14	-4929.04	
1.155e+04												
						350.0	-2943.80	-241.53	811.75	-12.14	1.371e+05	-
3.072e+04												
14	81	1.018e+05	1.219e+05	-0.33	0.0	0.0	-4208.73	614.07	721.95	-76.44	-1.308e+05	-
1.132e+05												
		-1.132e+05	-1.308e+05	-1.04	0.0	175.0	-4134.82	614.07	721.95	-76.44	-4459.41	-
5697.99												
						350.0	-4060.92	614.07	721.95	-76.44	1.219e+05	
1.018e+05												
14	84	1.313e+05	1.234e+05	0.45	0.0	0.0	1399.67	-641.17	-680.93	85.72	1.234e+05	
1.313e+05												
		-9.311e+04	-1.149e+05	0.98	0.0	175.0	1473.58	-641.17	-680.93	85.72	4272.80	
1.910e+04												
						350.0	1547.49	-641.17	-680.93	85.72	-1.149e+05	-
9.311e+04												
14	97	1.013e+05	2.382e+04	-0.34	0.0	0.0	-2811.34	616.77	141.57	8.72	-2.571e+04	-
1.145e+05												
		-1.145e+05	-2.571e+04	-0.25	0.0	175.0	-2737.43	616.77	141.57	8.72	-948.81	-
6607.67												
						350.0	-2663.53	616.77	141.57	8.72	2.382e+04	
1.013e+05												

Viale Duca Alessandro n. 11 – 43123 Parma
Cell. 335 1403156 – E mail ing.concari@gmail.com
Sito web: studioaire.it – P.IVA 02561480340

14	100	1.327e+05	1.835e+04	0.45	0.0	0.0	2.28	-643.87	-100.56	0.56	1.835e+04	
1.327e+05												
		-9.267e+04	-1.683e+04	0.19	0.0	175.0	76.19	-643.87	-100.56	0.56	762.20	
2.001e+04												
						350.0	150.10	-643.87	-100.56	0.56	-1.683e+04	-
9.267e+04												
14	103	3.851e+04	9.139e+04	0.15	0.0	0.0	-2514.29	-163.58	540.94	-6.40	-9.794e+04	
3.851e+04												
		-1.874e+04	-9.794e+04	-0.72	0.0	175.0	-2440.39	-163.58	540.94	-6.40	-3274.09	
9886.89												
						350.0	-2366.48	-163.58	540.94	-6.40	9.139e+04	-
1.874e+04												
14	113	6.841e+04	8.136e+04	-0.20	0.0	0.0	-3248.84	399.26	481.87	-48.69	-8.729e+04	-
7.133e+04												
		-7.133e+04	-8.729e+04	-0.69	0.0	175.0	-3174.93	399.26	481.87	-48.69	-2965.21	-
1455.56												
						350.0	-3101.03	399.26	481.87	-48.69	8.136e+04	
6.841e+04												
14	116	8.947e+04	7.993e+04	0.31	0.0	0.0	439.79	-426.35	-440.86	57.97	7.993e+04	
8.947e+04												
		-5.976e+04	-7.437e+04	0.64	0.0	175.0	513.69	-426.35	-440.86	57.97	2778.60	
1.485e+04												
						350.0	587.60	-426.35	-440.86	57.97	-7.437e+04	-
5.976e+04												
14	125	2.463e+04	3.563e+04	-0.02	0.0	0.0	-2415.41	110.28	211.53	3.13	-3.840e+04	-
1.397e+04												
		-1.397e+04	-3.840e+04	-0.30	0.0	175.0	-2341.51	110.28	211.53	3.13	-1384.67	
5333.69												
						350.0	-2267.60	110.28	211.53	3.13	3.563e+04	
2.463e+04												
14	128	1.551e+04	6.485e+04	0.07	0.0	0.0	-1967.63	-57.22	383.80	7.51	-6.948e+04	
1.551e+04												
		-4514.84	-6.948e+04	-0.54	0.0	175.0	-1893.73	-57.22	383.80	7.51	-2318.98	
5498.69												
						350.0	-1819.82	-57.22	383.80	7.51	6.485e+04	-
4514.84												
14	129	2.188e+04	5.980e+04	-0.02	0.0	0.0	-2614.21	99.50	354.67	3.89	-6.433e+04	-
1.295e+04												
		-1.295e+04	-6.433e+04	-0.50	0.0	175.0	-2540.30	99.50	354.67	3.89	-2265.26	
4463.52												
						350.0	-2466.39	99.50	354.67	3.89	5.980e+04	
2.188e+04												
14	140	1.997e+04	6.852e+04	0.08	0.0	0.0	170.88	-80.38	-377.53	2.10	6.852e+04	
1.997e+04												
		-8163.75	-6.362e+04	0.53	0.0	175.0	244.79	-80.38	-377.53	2.10	2451.76	
5902.19												
						350.0	318.69	-80.38	-377.53	2.10	-6.362e+04	-
8163.75												
14	141	1.823e+04	7.367e+04	-9.01e-03	0.0	0.0	-475.69	76.35	-406.66	-1.52	7.367e+04	-
8493.77												
		-8493.77	-6.866e+04	0.57	0.0	175.0	-401.79	76.35	-406.66	-1.52	2505.48	
4867.03												
						350.0	-327.88	76.35	-406.66	-1.52	-6.866e+04	
1.823e+04												
14	145	2.017e+04	357.00	-0.01	0.0	0.0	-1611.78	88.65	-2.21	1.35	357.00	-
1.086e+04												
		-1.086e+04	-414.94	2.20e-03	0.0	175.0	-1537.87	88.65	-2.21	1.35	-28.97	
4652.66												
						350.0	-1463.96	88.65	-2.21	1.35	-414.94	
2.017e+04												
14	152	1.235e+04	1.570e+04	0.06	0.0	0.0	-1200.66	-41.61	92.65	4.64	-1.673e+04	
1.235e+04												
		-2210.34	-1.673e+04	-0.13	0.0	175.0	-1126.75	-41.61	92.65	4.64	-512.70	
5072.20												
						350.0	-1052.84	-41.61	92.65	4.64	1.570e+04	-
2210.34												
14	153	1.936e+04	1.166e+04	-0.01	0.0	0.0	-1744.87	85.78	69.30	1.77	-1.260e+04	-
1.066e+04												
		-1.066e+04	-1.260e+04	-0.10	0.0	175.0	-1670.96	85.78	69.30	1.77	-471.59	
4350.00												
						350.0	-1597.06	85.78	69.30	1.77	1.166e+04	
1.936e+04												
14	156	1.325e+04	1.087e+04	0.06	0.0	0.0	-772.95	-46.25	-59.61	3.56	1.087e+04	
1.325e+04												
		-2940.12	-9990.75	0.09	0.0	175.0	-699.05	-46.25	-59.61	3.56	441.44	
5152.90												
						350.0	-625.14	-46.25	-59.61	3.56	-9990.75	-
2940.12												
14	160	1.277e+04	3658.27	0.06	0.0	0.0	-1000.17	-43.79	21.28	4.13	-3789.17	
1.277e+04												
		-2552.42	-3789.17	-0.03	0.0	175.0	-926.26	-43.79	21.28	4.13	-65.45	
5110.02												
						350.0	-852.36	-43.79	21.28	4.13	3658.27	-
2552.42												
14	161	1.902e+04	339.11	-0.01	0.0	0.0	-1544.39	83.61	-2.08	1.27	339.11	-
1.024e+04												
		-1.024e+04	-387.77	2.14e-03	0.0	175.0	-1470.48	83.61	-2.08	1.27	-24.33	
4387.83												
						350.0	-1396.57	83.61	-2.08	1.27	-387.77	
1.902e+04												
15	15	1.152e+05	5.542e+04	-0.07	0.0	0.0	-1540.16	502.45	326.55	-32.00	-5.887e+04	-
6.066e+04												
		-6.066e+04	-5.887e+04	-0.45	0.0	175.0	-1444.08	502.45	326.55	-32.00	-1722.48	
2.727e+04												
						350.0	-1348.00	502.45	326.55	-32.00	5.542e+04	
1.152e+05												
15	24	8.616e+04	1.010e+05	0.07	0.0	0.0	415.38	330.30	597.50	-48.64	-1.081e+05	-
2.945e+04												

Viale Duca Alessandro n. 11 – 43123 Parma
Cell. 335 1403156 – E mail ing.concari@gmail.com
Sito web: studioaire.it – P.IVA 02561480340

		-2.945e+04	-1.081e+05	-0.84	0.0	175.0	511.46	330.30	597.50	-48.64	-3559.65	
2.836e+04												
						350.0	607.54	330.30	597.50	-48.64	1.010e+05	
8.616e+04												
15	26	3.636e+04	9.995e+04	0.08	0.0	0.0	1617.65	111.79	592.11	-49.74	-1.073e+05	-
2771.43												
		-2771.43	-1.073e+05	-0.83	0.0	175.0	1691.56	111.79	592.11	-49.74	-3664.47	
1.679e+04												
						350.0	1765.46	111.79	592.11	-49.74	9.995e+04	
3.636e+04												
15	35	1.149e+05	6.307e+04	-0.08	0.0	0.0	-4917.00	504.81	-345.85	41.02	6.307e+04	-
6.175e+04												
		-6.175e+04	-5.798e+04	0.50	0.0	175.0	-4820.92	504.81	-345.85	41.02	2544.46	
2.659e+04												
						350.0	-4724.84	504.81	-345.85	41.02	-5.798e+04	
1.149e+05												
15	47	9.998e+04	1.065e+05	-0.07	0.0	0.0	-5805.07	440.24	-585.76	66.51	1.065e+05	-
5.410e+04												
		-5.410e+04	-9.848e+04	0.83	0.0	175.0	-5708.99	440.24	-585.76	66.51	4029.62	
2.294e+04												
						350.0	-5612.91	440.24	-585.76	66.51	-9.848e+04	
9.998e+04												
15	49	5.018e+04	1.074e+05	-0.04	0.0	0.0	-4602.80	221.73	-591.15	65.40	1.074e+05	-
2.743e+04												
		-2.743e+04	-9.953e+04	0.84	0.0	175.0	-4528.89	221.73	-591.15	65.40	3924.80	
1.137e+04												
						350.0	-4454.98	221.73	-591.15	65.40	-9.953e+04	
5.018e+04												
15	66	1.699e+05	7607.57	-0.51	0.0	0.0	-3302.49	1007.09	44.18	71.54	-7857.83	-
1.826e+05												
		-1.826e+05	-7857.83	-0.06	0.0	175.0	-3228.59	1007.09	44.18	71.54	-125.13	-
6368.47												
						350.0	-3154.68	1007.09	44.18	71.54	7607.57	
1.699e+05												
15	69	8.438e+04	1.549e+05	-0.10	0.0	0.0	1179.84	406.30	914.65	-14.48	-1.652e+05	-
5.758e+04												
		-5.758e+04	-1.652e+05	-1.28	0.0	175.0	1253.74	406.30	914.65	-14.48	-5178.99	
1.340e+04												
						350.0	1327.65	406.30	914.65	-14.48	1.549e+05	
8.438e+04												
15	70	9.123e+04	1.149e+05	-0.13	0.0	0.0	-5621.88	450.73	-634.96	66.52	1.149e+05	-
6.677e+04												
		-6.677e+04	-1.074e+05	0.89	0.0	175.0	-5547.98	450.73	-634.96	66.52	3743.12	
1.223e+04												
						350.0	-5474.07	450.73	-634.96	66.52	-1.074e+05	
9.123e+04												
15	71	3.401e+04	1.212e+05	0.18	0.0	0.0	2206.94	49.90	714.86	-57.03	-1.290e+05	
1.680e+04												
		1.680e+04	-1.290e+05	-1.00	0.0	175.0	2280.85	49.90	714.86	-57.03	-3889.64	
2.540e+04												
						350.0	2354.76	49.90	714.86	-57.03	1.212e+05	
3.401e+04												
15	98	1.332e+05	7371.99	-0.33	0.0	0.0	-2756.35	748.04	42.74	48.68	-7586.63	-
1.287e+05												
		-1.287e+05	-7586.63	-0.06	0.0	175.0	-2682.45	748.04	42.74	48.68	-107.32	
2248.05												
						350.0	-2608.54	748.04	42.74	48.68	7371.99	
1.332e+05												
15	101	7.697e+04	1.042e+05	-0.07	0.0	0.0	191.59	353.06	615.27	-7.90	-1.111e+05	-
4.644e+04												
		-4.644e+04	-1.111e+05	-0.86	0.0	175.0	265.50	353.06	615.27	-7.90	-3431.77	
1.526e+04												
						350.0	339.40	353.06	615.27	-7.90	1.042e+05	
7.697e+04												
15	102	8.140e+04	7.313e+04	-0.09	0.0	0.0	-4281.87	381.96	-403.96	45.38	7.313e+04	-
5.245e+04												
		-5.245e+04	-6.826e+04	0.57	0.0	175.0	-4207.96	381.96	-403.96	45.38	2437.15	
1.447e+04												
						350.0	-4134.05	381.96	-403.96	45.38	-6.826e+04	
8.140e+04												
15	103	4.385e+04	8.209e+04	0.13	0.0	0.0	866.93	118.66	483.86	-35.89	-8.726e+04	
2477.04												
		2477.04	-8.726e+04	-0.67	0.0	175.0	940.83	118.66	483.86	-35.89	-2583.67	
2.316e+04												
						350.0	1014.74	118.66	483.86	-35.89	8.209e+04	
4.385e+04												
15	125	8.352e+04	3.707e+04	-0.05	0.0	0.0	-1241.82	364.26	218.26	-21.24	-3.932e+04	-
4.397e+04												
		-4.397e+04	-3.932e+04	-0.30	0.0	175.0	-1167.92	364.26	218.26	-21.24	-1128.75	
1.978e+04												
						350.0	-1094.01	364.26	218.26	-21.24	3.707e+04	
8.352e+04												
15	128	4.104e+04	6.693e+04	0.05	0.0	0.0	540.80	147.74	396.14	-32.92	-7.172e+04	-
1.067e+04												
		-1.067e+04	-7.172e+04	-0.56	0.0	175.0	614.71	147.74	396.14	-32.92	-2394.06	
1.519e+04												
						350.0	688.62	147.74	396.14	-32.92	6.693e+04	
4.104e+04												
15	130	6.416e+04	6.745e+04	0.05	0.0	0.0	61.86	249.48	398.90	-32.33	-7.216e+04	-
2.316e+04												
		-2.316e+04	-7.216e+04	-0.56	0.0	175.0	135.77	249.48	398.90	-32.33	-2353.53	
2.050e+04												
						350.0	209.68	249.48	398.90	-32.33	6.745e+04	
6.416e+04												
15	135	8.334e+04	4.197e+04	-0.06	0.0	0.0	-3493.05	365.82	-230.00	27.45	4.197e+04	-
4.469e+04												
		-4.469e+04	-3.853e+04	0.33	0.0	175.0	-3419.14	365.82	-230.00	27.45	1715.88	
1.933e+04												

Viale Duca Alessandro n. 11 – 43123 Parma
Cell. 335 1403156 – E mail ing.concari@gmail.com
Sito web: studioaire.it – P.IVA 02561480340

						350.0	-3345.23	365.82	-230.00	27.45	-3.853e+04	
8.334e+04												
15	139	5.025e+04	7.139e+04	-0.03	0.0	0.0	-3606.16	221.04	-392.70	43.85	7.139e+04	-
2.711e+04												
		-2.711e+04	-6.606e+04	0.56	0.0	175.0	-3532.25	221.04	-392.70	43.85	2665.46	
1.157e+04												
						350.0	-3458.35	221.04	-392.70	43.85	-6.606e+04	
5.025e+04												
15	141	7.337e+04	7.095e+04	-0.05	0.0	0.0	-4085.10	322.78	-389.94	44.44	7.095e+04	-
3.960e+04												
		-3.960e+04	-6.553e+04	0.56	0.0	175.0	-4011.19	322.78	-389.94	44.44	2705.98	
1.689e+04												
						350.0	-3937.28	322.78	-389.94	44.44	-6.553e+04	
7.337e+04												
15	145	7.353e+04	1405.05	-0.05	0.0	0.0	-2091.83	321.39	6.96	1.33	-1030.45	-
3.896e+04												
		-3.896e+04	-1030.45	-5.34e-03	0.0	175.0	-2017.92	321.39	6.96	1.33	187.30	
1.729e+04												
						350.0	-1944.01	321.39	6.96	1.33	1405.05	
7.353e+04												
15	152	4.283e+04	1.828e+04	0.04	0.0	0.0	-945.20	162.86	107.63	-3.36	-1.939e+04	-
1.417e+04												
		-1.417e+04	-1.939e+04	-0.15	0.0	175.0	-871.29	162.86	107.63	-3.36	-552.47	
1.433e+04												
						350.0	-797.38	162.86	107.63	-3.36	1.828e+04	
4.283e+04												
15	154	6.265e+04	1.873e+04	0.03	0.0	0.0	-1355.72	250.07	109.99	-2.86	-1.977e+04	-
2.487e+04												
		-2.487e+04	-1.977e+04	-0.15	0.0	175.0	-1281.81	250.07	109.99	-2.86	-517.74	
1.889e+04												
						350.0	-1207.90	250.07	109.99	-2.86	1.873e+04	
6.265e+04												
15	157	7.020e+04	1.343e+04	-0.05	0.0	0.0	-2422.06	307.13	-72.82	9.87	1.343e+04	-
3.730e+04												
		-3.730e+04	-1.206e+04	0.11	0.0	175.0	-2348.15	307.13	-72.82	9.87	685.25	
1.645e+04												
						350.0	-2274.25	307.13	-72.82	9.87	-1.206e+04	
7.020e+04												
15	160	4.280e+04	6470.06	0.04	0.0	0.0	-1296.95	163.10	37.59	4.24	-6686.05	-
1.428e+04												
		-1.428e+04	-6686.05	-0.05	0.0	175.0	-1223.04	163.10	37.59	4.24	-108.00	
1.426e+04												
						350.0	-1149.14	163.10	37.59	4.24	6470.06	
4.280e+04												
15	161	7.023e+04	1330.44	-0.05	0.0	0.0	-2023.41	306.85	6.57	1.25	-967.42	-
3.717e+04												
		-3.717e+04	-967.42	-4.96e-03	0.0	175.0	-1949.50	306.85	6.57	1.25	181.51	
1.653e+04												
						350.0	-1875.59	306.85	6.57	1.25	1330.44	
7.023e+04												
15	162	6.262e+04	6917.68	0.03	0.0	0.0	-1707.47	250.31	39.95	4.75	-7064.21	-
2.499e+04												
		-2.499e+04	-7064.21	-0.05	0.0	175.0	-1633.56	250.31	39.95	4.75	-73.26	
1.882e+04												
						350.0	-1559.65	250.31	39.95	4.75	6917.68	
6.262e+04												
16	24	2.009e+04	1.012e+05	0.08	0.0	0.0	-3998.94	-81.43	598.12	25.14	-1.082e+05	
2.009e+04												
		-8412.19	-1.082e+05	-0.84	0.0	175.0	-3902.86	-81.43	598.12	25.14	-3520.71	
5837.43												
						350.0	-3806.78	-81.43	598.12	25.14	1.012e+05	-
8412.19												
16	26	2.517e+04	1.001e+05	0.09	0.0	0.0	-3422.33	-117.56	592.58	24.03	-1.073e+05	
2.517e+04												
		-1.597e+04	-1.073e+05	-0.83	0.0	175.0	-3348.42	-117.56	592.58	24.03	-3634.17	
4599.50												
						350.0	-3274.51	-117.56	592.58	24.03	1.001e+05	-
1.597e+04												
16	49	1.010e+04	1.073e+05	-7.38e-03	0.0	0.0	2209.51	44.81	-590.57	-18.20	1.073e+05	-
5585.68												
		-5585.68	-9.940e+04	0.84	0.0	175.0	2283.41	44.81	-590.57	-18.20	3952.05	
2255.44												
						350.0	2357.32	44.81	-590.57	-18.20	-9.940e+04	
1.010e+04												
16	66	1.220e+05	7728.57	-0.47	0.0	0.0	-1743.26	775.65	44.71	64.65	-7921.41	-
1.495e+05												
		-1.495e+05	-7921.41	-0.06	0.0	175.0	-1669.35	775.65	44.71	64.65	-96.42	-
1.376e+04												
						350.0	-1595.44	775.65	44.71	64.65	7728.57	
1.220e+05												
16	67	1.667e+05	6346.46	0.55	0.0	0.0	-212.86	-827.65	36.23	-55.14	-6331.28	
1.667e+05												
		-1.230e+05	-6331.28	-0.05	0.0	175.0	-138.95	-827.65	36.23	-55.14	7.59	
2.184e+04												
						350.0	-65.04	-827.65	36.23	-55.14	6346.46	-
1.230e+05												
16	69	2.776e+04	1.550e+05	-0.09	0.0	0.0	-4975.11	160.67	915.13	43.47	-1.653e+05	-
2.783e+04												
		-2.783e+04	-1.653e+05	-1.28	0.0	175.0	-4901.20	160.67	915.13	43.47	-5150.11	-
33.92												
						350.0	-4827.29	160.67	915.13	43.47	1.550e+05	
2.776e+04												
16	72	4.501e+04	1.510e+05	0.18	0.0	0.0	3019.00	-212.67	-834.19	-33.97	1.510e+05	
4.501e+04												
		-2.879e+04	-1.409e+05	1.17	0.0	175.0	3092.90	-212.67	-834.19	-33.97	5061.28	
8111.70												
						350.0	3166.81	-212.67	-834.19	-33.97	-1.409e+05	-
2.879e+04												

Viale Duca Alessandro n. 11 – 43123 Parma
Cell. 335 1403156 – E mail ing.concari@gmail.com
Sito web: studioaire.it – P.IVA 02561480340

16	98	8.005e+04	7492.59	-0.29	0.0	0.0	-1481.17	501.24	43.26	44.15	-7649.71	-
9.539e+04												
		-9.539e+04	-7649.71	-0.06	0.0	175.0	-1407.26	501.24	43.26	44.15	-78.56	-
7672.53												
						350.0	-1333.35	501.24	43.26	44.15	7492.59	
8.005e+04												
16	99	1.126e+05	6582.44	0.38	0.0	0.0	-474.94	-553.24	37.68	-34.64	-6602.98	
1.126e+05												
		-8.107e+04	-6602.98	-0.05	0.0	175.0	-401.04	-553.24	37.68	-34.64	-10.27	
1.575e+04												
						350.0	-327.13	-553.24	37.68	-34.64	6582.44	-
8.107e+04												
16	101	1.809e+04	1.044e+05	-0.05	0.0	0.0	-3606.97	96.78	615.77	30.22	-1.112e+05	-
1.537e+04												
		-1.537e+04	-1.112e+05	-0.86	0.0	175.0	-3533.06	96.78	615.77	30.22	-3402.90	
1360.34												
						350.0	-3459.15	96.78	615.77	30.22	1.044e+05	
1.809e+04												
16	104	3.254e+04	9.691e+04	0.13	0.0	0.0	1650.86	-148.79	-534.83	-20.72	9.691e+04	
3.254e+04												
		-1.911e+04	-9.028e+04	0.75	0.0	175.0	1724.76	-148.79	-534.83	-20.72	3314.07	
6717.44												
						350.0	1798.67	-148.79	-534.83	-20.72	-9.028e+04	-
1.911e+04												
16	128	1.545e+04	6.704e+04	0.06	0.0	0.0	-2541.81	-68.80	396.62	16.27	-7.177e+04	
1.545e+04												
		-8626.48	-7.177e+04	-0.56	0.0	175.0	-2467.90	-68.80	396.62	16.27	-2364.21	
3414.11												
						350.0	-2394.00	-68.80	396.62	16.27	6.704e+04	-
8626.48												
16	130	1.286e+04	6.757e+04	0.06	0.0	0.0	-2770.06	-50.46	399.37	16.86	-7.221e+04	
1.286e+04												
		-4798.92	-7.221e+04	-0.56	0.0	175.0	-2696.16	-50.46	399.37	16.86	-2323.71	
4030.73												
						350.0	-2622.25	-50.46	399.37	16.86	6.757e+04	-
4798.92												
16	139	8754.06	7.132e+04	-7.10e-03	0.0	0.0	1212.74	39.44	-392.14	-11.88	7.132e+04	-
5051.24												
		-5051.24	-6.593e+04	0.56	0.0	175.0	1286.65	39.44	-392.14	-11.88	2693.27	
1851.41												
						350.0	1360.56	39.44	-392.14	-11.88	-6.593e+04	
8754.06												
16	145	9896.60	1521.01	-0.01	0.0	0.0	-1009.03	47.07	7.46	1.34	-1088.59	-
6576.68												
		-6576.68	-1088.59	-5.47e-03	0.0	175.0	-935.13	47.07	7.46	1.34	216.21	
1659.96												
						350.0	-861.22	47.07	7.46	1.34	1521.01	
9896.60												
16	149	1.266e+04	7288.77	0.05	0.0	0.0	-782.62	-50.53	42.28	4.69	-7510.73	
1.266e+04												
		-5024.71	-7510.73	-0.06	0.0	175.0	-708.71	-50.53	42.28	4.69	-110.98	
3818.74												
						350.0	-634.80	-50.53	42.28	4.69	7288.77	-
5024.71												
16	154	8777.71	1.885e+04	0.04	0.0	0.0	-1329.86	-27.89	110.50	6.98	-1.983e+04	
8777.71												
		-985.13	-1.983e+04	-0.15	0.0	175.0	-1255.95	-27.89	110.50	6.98	-488.69	
3896.29												
						350.0	-1182.04	-27.89	110.50	6.98	1.885e+04	-
985.13												
16	155	6606.04	1.375e+04	-6.64e-03	0.0	0.0	-382.08	30.86	-74.67	-1.78	1.375e+04	-
4196.13												
		-4196.13	-1.239e+04	0.11	0.0	175.0	-308.17	30.86	-74.67	-1.78	679.23	
1204.95												
						350.0	-234.26	30.86	-74.67	-1.78	-1.239e+04	
6606.04												
16	159	6069.04	998.77	-6.52e-03	0.0	0.0	-780.78	28.72	4.70	0.75	-647.34	-
3982.36												
		-3982.36	-647.34	-2.89e-03	0.0	175.0	-706.87	28.72	4.70	0.75	175.71	
1043.34												
						350.0	-632.97	28.72	4.70	0.75	998.77	
6069.04												
16	160	1.081e+04	6589.88	0.05	0.0	0.0	-782.41	-41.73	38.11	4.25	-6748.13	
1.081e+04												
		-3792.07	-6748.13	-0.05	0.0	175.0	-708.50	-41.73	38.11	4.25	-79.12	
3510.36												
						350.0	-634.60	-41.73	38.11	4.25	6589.88	-
3792.07												
16	161	9349.81	1446.41	-0.01	0.0	0.0	-976.43	44.45	7.06	1.25	-1025.56	-
6206.07												
		-6206.07	-1025.56	-5.08e-03	0.0	175.0	-902.52	44.45	7.06	1.25	210.42	
1571.87												
						350.0	-828.61	44.45	7.06	1.25	1446.41	
9349.81												
16	162	8589.08	7037.51	0.04	0.0	0.0	-978.06	-26.00	40.47	4.75	-7126.34	
8589.08												
		-511.30	-7126.34	-0.05	0.0	175.0	-904.15	-26.00	40.47	4.75	-44.42	
4038.89												
						350.0	-830.24	-26.00	40.47	4.75	7037.51	-
511.30												
17	16	3.103e+04	6.037e+04	0.08	0.0	0.0	-812.33	-176.90	358.21	3.64	-6.500e+04	
3.103e+04												
		-3.089e+04	-6.500e+04	-0.51	0.0	175.0	-716.25	-176.90	358.21	3.64	-2313.75	
70.73												
						350.0	-620.17	-176.90	358.21	3.64	6.037e+04	-
3.089e+04												
17	24	3.137e+04	9.664e+04	0.08	0.0	0.0	-90.57	-177.88	572.98	-0.06	-1.039e+05	
3.137e+04												

Viale Duca Alessandro n. 11 – 43123 Parma
Cell. 335 1403156 – E mail ing.concari@gmail.com
Sito web: studioaire.it – P.IVA 02561480340

		-3.088e+04	-1.039e+05	-0.81	0.0	175.0	5.51	-177.88	572.98	-0.06	-3634.40	
244.01												
						350.0	101.59	-177.88	572.98	-0.06	9.664e+04	-
3.088e+04												
17	25	2686.63	8.980e+04	-6.25e-03	0.0	0.0	774.93	-29.81	532.76	-7.53	-9.667e+04	
2686.63												
		-7746.92	-9.667e+04	-0.75	0.0	175.0	848.83	-29.81	532.76	-7.53	-3432.34	-
2530.14												
						350.0	922.74	-29.81	532.76	-7.53	8.980e+04	-
7746.92												
17	26	3.033e+04	9.709e+04	0.09	0.0	0.0	404.13	-161.42	575.15	-1.18	-1.042e+05	
3.033e+04												
		-2.617e+04	-1.042e+05	-0.81	0.0	175.0	478.04	-161.42	575.15	-1.18	-3562.13	
2078.02												
						350.0	551.95	-161.42	575.15	-1.18	9.709e+04	-
2.617e+04												
17	47	216.45	1.107e+05	-0.01	0.0	0.0	-2943.07	-13.27	-611.76	11.27	1.107e+05	
216.45												
		-4426.59	-1.034e+05	0.86	0.0	175.0	-2846.99	-13.27	-611.76	11.27	3650.24	-
2105.07												
						350.0	-2750.91	-13.27	-611.76	11.27	-1.034e+05	-
4426.59												
17	48	2.786e+04	1.032e+05	0.09	0.0	0.0	-3313.86	-144.88	-569.37	17.62	1.032e+05	
2.786e+04												
		-2.285e+04	-9.612e+04	0.80	0.0	175.0	-3217.78	-144.88	-569.37	17.62	3520.45	
2503.09												
						350.0	-3121.70	-144.88	-569.37	17.62	-9.612e+04	-
2.285e+04												
17	66	1.068e+05	4.017e+04	-0.47	0.0	0.0	-237.85	710.86	-222.90	66.60	4.017e+04	-
1.420e+05												
		-1.420e+05	-3.788e+04	0.23	0.0	175.0	-163.94	710.86	-222.90	66.60	1145.17	-
1.760e+04												
						350.0	-90.03	710.86	-222.90	66.60	-3.788e+04	
1.068e+05												
17	67	1.744e+05	4.422e+04	0.55	0.0	0.0	-1942.68	-893.82	261.14	-57.29	-4.721e+04	
1.744e+05												
		-1.384e+05	-4.721e+04	-0.29	0.0	175.0	-1868.78	-893.82	261.14	-57.29	-1496.30	
1.798e+04												
						350.0	-1794.87	-893.82	261.14	-57.29	4.422e+04	-
1.384e+05												
17	70	1.586e+04	1.398e+05	-0.07	0.0	0.0	-2757.17	114.17	-772.14	32.87	1.398e+05	-
2.477e+04												
		-2.477e+04	-1.305e+05	1.02	0.0	175.0	-2683.27	114.17	-772.14	32.87	4659.74	-
4458.37												
						350.0	-2609.36	114.17	-772.14	32.87	-1.305e+05	
1.586e+04												
17	71	5.717e+04	1.368e+05	0.16	0.0	0.0	576.64	-297.13	810.37	-23.56	-1.468e+05	
5.717e+04												
		-4.749e+04	-1.468e+05	-1.08	0.0	175.0	650.55	-297.13	810.37	-23.56	-5010.87	
4839.75												
						350.0	724.46	-297.13	810.37	-23.56	1.368e+05	-
4.749e+04												
17	73	1.699e+04	1.316e+05	-0.11	0.0	0.0	1360.75	125.31	779.90	9.07	-1.414e+05	-
2.620e+04												
		-2.620e+04	-1.414e+05	-1.12	0.0	175.0	1434.66	125.31	779.90	9.07	-4879.46	-
4606.33												
						350.0	1508.56	125.31	779.90	9.07	1.316e+05	
1.699e+04												
17	76	5.860e+04	1.343e+05	0.20	0.0	0.0	-3541.28	-308.27	-741.66	0.25	1.343e+05	
5.860e+04												
		-4.863e+04	-1.253e+05	1.07	0.0	175.0	-3467.37	-308.27	-741.66	0.25	4528.33	
4987.70												
						350.0	-3393.46	-308.27	-741.66	0.25	-1.253e+05	-
4.863e+04												
17	99	1.203e+05	3.017e+04	0.38	0.0	0.0	-1650.80	-619.18	178.31	-36.09	-3.226e+04	
1.203e+05												
		-9.646e+04	-3.226e+04	-0.20	0.0	175.0	-1576.89	-619.18	178.31	-36.09	-1044.34	
1.190e+04												
						350.0	-1502.98	-619.18	178.31	-36.09	3.017e+04	-
9.646e+04												
17	103	4.315e+04	9.107e+04	0.12	0.0	0.0	6.14	-226.71	539.56	-13.90	-9.778e+04	
4.315e+04												
		-3.665e+04	-9.778e+04	-0.72	0.0	175.0	80.04	-226.71	539.56	-13.90	-3356.07	
3250.20												
						350.0	153.95	-226.71	539.56	-13.90	9.107e+04	-
3.665e+04												
17	105	5761.10	8.764e+04	-0.06	0.0	0.0	521.80	51.12	519.52	7.56	-9.418e+04	-
1.169e+04												
		-1.169e+04	-9.418e+04	-0.75	0.0	175.0	595.71	51.12	519.52	7.56	-3269.62	-
2964.25												
						350.0	669.62	51.12	519.52	7.56	8.764e+04	
5761.10												
17	108	4.409e+04	8.714e+04	0.15	0.0	0.0	-2702.33	-234.08	-481.28	1.75	8.714e+04	
4.409e+04												
		-3.740e+04	-8.130e+04	0.69	0.0	175.0	-2628.43	-234.08	-481.28	1.75	2918.49	
3345.62												
						350.0	-2554.52	-234.08	-481.28	1.75	-8.130e+04	-
3.740e+04												
17	126	2.082e+04	4.017e+04	0.05	0.0	0.0	-639.68	-119.84	238.44	2.53	-4.328e+04	
2.082e+04												
		-2.112e+04	-4.328e+04	-0.34	0.0	175.0	-565.78	-119.84	238.44	2.53	-1552.97	-
149.00												
						350.0	-491.87	-119.84	238.44	2.53	4.017e+04	-
2.112e+04												
17	127	2137.36	5.968e+04	-5.84e-03	0.0	0.0	271.29	-24.65	354.27	-4.77	-6.431e+04	
2137.36												
		-6491.69	-6.431e+04	-0.50	0.0	175.0	345.20	-24.65	354.27	-4.77	-2314.39	-
2177.16												

Viale Duca Alessandro n. 11 – 43123 Parma
Cell. 335 1403156 – E mail ing.concari@gmail.com
Sito web: studioaire.it – P.IVA 02561480340

						350.0	419.10	-24.65	354.27	-4.77	5.968e+04	-
6491.69												
17	128	2.056e+04	6.454e+04	0.06	0.0	0.0	24.09	-112.40	382.53	-0.53	-6.934e+04	
2.056e+04												
		-1.877e+04	-6.934e+04	-0.54	0.0	175.0	98.00	-112.40	382.53	-0.53	-2400.92	
894.95												
						350.0	171.91	-112.40	382.53	-0.53	6.454e+04	-
1.877e+04												
17	130	2.105e+04	6.435e+04	0.06	0.0	0.0	-158.51	-120.50	381.63	0.06	-6.922e+04	
2.105e+04												
		-2.112e+04	-6.922e+04	-0.54	0.0	175.0	-84.61	-120.50	381.63	0.06	-2433.40	-
33.49												
						350.0	-10.70	-120.50	381.63	0.06	6.435e+04	-
2.112e+04												
17	141	282.81	7.386e+04	-7.68e-03	0.0	0.0	-2060.18	-10.76	-408.20	7.61	7.386e+04	
282.81												
		-3481.89	-6.901e+04	0.57	0.0	175.0	-1986.27	-10.76	-408.20	7.61	2423.03	-
1599.54												
						350.0	-1912.36	-10.76	-408.20	7.61	-6.901e+04	-
3481.89												
17	142	1.871e+04	6.883e+04	0.06	0.0	0.0	-2307.37	-98.50	-379.94	11.85	6.883e+04	
1.871e+04												
		-1.576e+04	-6.415e+04	0.53	0.0	175.0	-2233.47	-98.50	-379.94	11.85	2336.50	
1472.57												
						350.0	-2159.56	-98.50	-379.94	11.85	-6.415e+04	-
1.576e+04												
17	150	1.804e+04	3656.01	0.05	0.0	0.0	-1114.99	-100.25	21.94	5.08	-4024.45	
1.804e+04												
		-1.705e+04	-4024.45	-0.03	0.0	175.0	-1041.08	-100.25	21.94	5.08	-184.22	
497.90												
						350.0	-967.17	-100.25	21.94	5.08	3656.01	-
1.705e+04												
17	151	1258.54	1.149e+04	-5.18e-03	0.0	0.0	-534.54	-16.41	68.68	-0.35	-1.255e+04	
1258.54												
		-4483.32	-1.255e+04	-0.10	0.0	175.0	-460.63	-16.41	68.68	-0.35	-525.68	-
1612.39												
						350.0	-386.72	-16.41	68.68	-0.35	1.149e+04	-
4483.32												
17	152	1.600e+04	1.538e+04	0.05	0.0	0.0	-732.29	-86.60	91.29	3.04	-1.657e+04	
1.600e+04												
		-1.431e+04	-1.657e+04	-0.13	0.0	175.0	-658.38	-86.60	91.29	3.04	-594.90	
845.30												
						350.0	-584.48	-86.60	91.29	3.04	1.538e+04	-
1.431e+04												
17	158	1.595e+04	1.115e+04	0.04	0.0	0.0	-1318.58	-89.14	-61.80	5.91	1.115e+04	
1.595e+04												
		-1.525e+04	-1.048e+04	0.09	0.0	175.0	-1244.68	-89.14	-61.80	5.91	331.24	
350.71												
						350.0	-1170.77	-89.14	-61.80	5.91	-1.048e+04	-
1.525e+04												
17	159	1038.84	396.64	-5.01e-03	0.0	0.0	-735.99	-14.34	-2.72	0.76	396.64	
1038.84												
		-3981.23	-553.64	1.99e-03	0.0	175.0	-662.08	-14.34	-2.72	0.76	-78.50	-
1471.20												
						350.0	-588.18	-14.34	-2.72	0.76	-553.64	-
3981.23												
17	160	1.578e+04	3333.58	0.05	0.0	0.0	-933.75	-84.54	19.89	4.15	-3629.03	
1.578e+04												
		-1.381e+04	-3629.03	-0.03	0.0	175.0	-859.84	-84.54	19.89	4.15	-147.72	
986.49												
						350.0	-785.93	-84.54	19.89	4.15	3333.58	-
1.381e+04												
17	162	1.620e+04	3170.11	0.04	0.0	0.0	-1090.27	-91.48	19.12	4.66	-3521.24	
1.620e+04												
		-1.582e+04	-3521.24	-0.03	0.0	175.0	-1016.36	-91.48	19.12	4.66	-175.56	
190.69												
						350.0	-942.45	-91.48	19.12	4.66	3170.11	-
1.582e+04												
24	16	1.177e+05	1.762e+04	-0.07	0.0	0.0	-294.94	-429.53	88.53	-30.51	-1.337e+04	
1.177e+05												
		-3.268e+04	-1.337e+04	-0.21	0.0	175.0	-198.86	-429.53	88.53	-30.51	2123.44	
4.248e+04												
						350.0	-102.78	-429.53	88.53	-30.51	1.762e+04	-
3.268e+04												
24	25	5.143e+04	2.894e+04	-0.04	0.0	0.0	-92.65	-188.87	145.36	-53.88	-2.193e+04	
5.143e+04												
		-1.467e+04	-2.193e+04	-0.34	0.0	175.0	-18.74	-188.87	145.36	-53.88	3503.18	
1.838e+04												
						350.0	55.17	-188.87	145.36	-53.88	2.894e+04	-
1.467e+04												
24	26	5.484e+04	3.049e+04	0.07	0.0	0.0	-113.03	-221.32	153.65	-53.68	-2.329e+04	
5.484e+04												
		-2.263e+04	-2.329e+04	-0.35	0.0	175.0	-39.12	-221.32	153.65	-53.68	3597.70	
1.611e+04												
						350.0	34.78	-221.32	153.65	-53.68	3.049e+04	-
2.263e+04												
24	47	9.689e+04	2.794e+04	-0.09	0.0	0.0	-652.98	-334.80	-183.39	63.38	2.794e+04	
9.689e+04												
		-2.029e+04	-3.625e+04	0.40	0.0	175.0	-556.90	-334.80	-183.39	63.38	-4157.93	
3.830e+04												
						350.0	-460.82	-334.80	-183.39	63.38	-3.625e+04	-
2.029e+04												
24	48	1.003e+05	2.658e+04	-0.07	0.0	0.0	-673.36	-367.26	-175.09	63.58	2.658e+04	
1.003e+05												
		-2.825e+04	-3.470e+04	0.38	0.0	175.0	-577.28	-367.26	-175.09	63.58	-4063.41	
3.602e+04												
						350.0	-481.20	-367.26	-175.09	63.58	-3.470e+04	-
2.825e+04												

Viale Duca Alessandro n. 11 – 43123 Parma
Cell. 335 1403156 – E mail ing.concari@gmail.com
Sito web: studioaire.it – P.IVA 02561480340

24	68	6.848e+04	3194.06	0.24	0.0	0.0	-516.49	-357.30	-26.13	15.85	3194.06	
6.848e+04												
		-5.336e+04	-5961.94	0.07	0.0	175.0	-442.58	-357.30	-26.13	15.85	-1383.94	
7558.14												
						350.0	-368.67	-357.30	-26.13	15.85	-5961.94	-
5.336e+04												
24	78	8.187e+04	2.365e+04	-0.19	0.0	0.0	-500.69	-263.14	-176.14	90.54	2.365e+04	
8.187e+04												
		-2.500e+04	-3.806e+04	0.46	0.0	175.0	-426.79	-263.14	-176.14	90.54	-7204.88	
2.844e+04												
						350.0	-352.88	-263.14	-176.14	90.54	-3.806e+04	-
2.500e+04												
24	79	6.021e+04	3.679e+04	0.23	0.0	0.0	-144.30	-258.00	169.21	-88.16	-2.250e+04	
6.021e+04												
		-1.532e+04	-2.250e+04	-0.46	0.0	175.0	-70.40	-258.00	169.21	-88.16	7146.12	
2.244e+04												
						350.0	3.51	-258.00	169.21	-88.16	3.679e+04	-
1.532e+04												
24	81	6.353e+04	3.180e+04	0.08	0.0	0.0	-67.04	-206.44	144.49	-77.85	-1.883e+04	
6.353e+04												
		1723.03	-1.883e+04	-0.41	0.0	175.0	6.86	-206.44	144.49	-77.85	6487.12	
3.263e+04												
						350.0	80.77	-206.44	144.49	-77.85	3.180e+04	
1723.03												
24	84	7.854e+04	1.998e+04	-0.06	0.0	0.0	-577.95	-314.70	-151.42	80.23	1.998e+04	
7.854e+04												
		-4.205e+04	-3.307e+04	0.41	0.0	175.0	-504.05	-314.70	-151.42	80.23	-6545.88	
1.825e+04												
						350.0	-430.14	-314.70	-151.42	80.23	-3.307e+04	-
4.205e+04												
24	100	6.974e+04	2297.04	0.17	0.0	0.0	-449.74	-323.64	-18.37	10.83	2297.04	
6.974e+04												
		-4.196e+04	-4139.15	0.05	0.0	175.0	-375.83	-323.64	-18.37	10.83	-921.06	
1.389e+04												
						350.0	-301.93	-323.64	-18.37	10.83	-4139.15	-
4.196e+04												
24	110	7.807e+04	1.572e+04	-0.12	0.0	0.0	-439.74	-262.42	-116.91	59.96	1.572e+04	
7.807e+04												
		-2.335e+04	-2.524e+04	0.30	0.0	175.0	-365.84	-262.42	-116.91	59.96	-4755.43	
2.736e+04												
						350.0	-291.93	-262.42	-116.91	59.96	-2.524e+04	-
2.335e+04												
24	111	6.401e+04	2.396e+04	0.16	0.0	0.0	-205.25	-258.72	109.98	-57.58	-1.457e+04	
6.401e+04												
		-1.697e+04	-1.457e+04	-0.30	0.0	175.0	-131.35	-258.72	109.98	-57.58	4696.67	
2.352e+04												
						350.0	-57.44	-258.72	109.98	-57.58	2.396e+04	-
1.697e+04												
24	113	6.599e+04	2.069e+04	0.06	0.0	0.0	-154.75	-225.14	93.76	-50.80	-1.216e+04	
6.599e+04												
		-5778.45	-1.216e+04	-0.27	0.0	175.0	-80.84	-225.14	93.76	-50.80	4261.92	
3.010e+04												
						350.0	-6.93	-225.14	93.76	-50.80	2.069e+04	-
5778.45												
24	116	7.609e+04	1.332e+04	-0.05	0.0	0.0	-490.25	-296.00	-100.69	53.18	1.332e+04	
7.609e+04												
		-3.454e+04	-2.196e+04	0.27	0.0	175.0	-416.34	-296.00	-100.69	53.18	-4320.69	
2.077e+04												
						350.0	-342.43	-296.00	-100.69	53.18	-2.196e+04	-
3.454e+04												
24	126	8.508e+04	1.157e+04	-0.05	0.0	0.0	-238.11	-310.38	58.08	-20.26	-8757.07	
8.508e+04												
		-2.356e+04	-8757.07	-0.14	0.0	175.0	-164.21	-310.38	58.08	-20.26	1406.25	
3.076e+04												
						350.0	-90.30	-310.38	58.08	-20.26	1.157e+04	-
2.356e+04												
24	127	5.089e+04	1.886e+04	-0.04	0.0	0.0	-165.49	-185.99	94.54	-35.72	-1.423e+04	
5.089e+04												
		-1.420e+04	-1.423e+04	-0.22	0.0	175.0	-91.58	-185.99	94.54	-35.72	2312.03	
1.835e+04												
						350.0	-17.67	-185.99	94.54	-35.72	1.886e+04	-
1.420e+04												
24	128	5.316e+04	1.989e+04	0.04	0.0	0.0	-179.08	-207.62	100.07	-35.58	-1.514e+04	
5.316e+04												
		-1.950e+04	-1.514e+04	-0.23	0.0	175.0	-105.17	-207.62	100.07	-35.58	2375.04	
1.683e+04												
						350.0	-31.26	-207.62	100.07	-35.58	1.989e+04	-
1.950e+04												
24	141	7.124e+04	1.878e+04	-0.07	0.0	0.0	-476.81	-247.23	-123.20	42.33	1.878e+04	
7.124e+04												
		-1.530e+04	-2.434e+04	0.27	0.0	175.0	-402.90	-247.23	-123.20	42.33	-2781.32	
2.797e+04												
						350.0	-328.99	-247.23	-123.20	42.33	-2.434e+04	-
1.530e+04												
24	142	7.350e+04	1.787e+04	-0.05	0.0	0.0	-490.40	-268.87	-117.67	42.47	1.787e+04	
7.350e+04												
		-2.060e+04	-2.331e+04	0.26	0.0	175.0	-416.49	-268.87	-117.67	42.47	-2718.31	
2.645e+04												
						350.0	-342.58	-268.87	-117.67	42.47	-2.331e+04	-
2.060e+04												
24	146	7.427e+04	599.34	-0.05	0.0	0.0	-322.58	-271.08	-3.60	1.27	599.34	
7.427e+04												
		-2.060e+04	-661.28	7.49e-04	0.0	175.0	-248.67	-271.08	-3.60	1.27	-30.97	
2.683e+04												
						350.0	-174.76	-271.08	-3.60	1.27	-661.28	-
2.060e+04												
24	150	7.127e+04	486.86	-0.04	0.0	0.0	-323.86	-262.73	-2.91	1.21	486.86	
7.127e+04												

Viale Duca Alessandro n. 11 – 43123 Parma
Cell. 335 1403156 – E mail ing.concari@gmail.com
Sito web: studioaire.it – P.IVA 02561480340

		-2.069e+04	-533.02	-1.38e-03	0.0	175.0	-249.95	-262.73	-2.91	1.21	-23.08	
2.529e+04												
						350.0	-176.04	-262.73	-2.91	1.21	-533.02	-
2.069e+04												
24	151	5.003e+04	2723.68	-0.04	0.0	0.0	-282.03	-181.37	13.24	-6.66	-1911.30	
5.003e+04												
		-1.345e+04	-1911.30	-0.04	0.0	175.0	-208.12	-181.37	13.24	-6.66	406.19	
1.829e+04												
						350.0	-134.22	-181.37	13.24	-6.66	2723.68	-
1.345e+04												
24	157	6.898e+04	4792.41	-0.06	0.0	0.0	-344.65	-241.95	-30.93	9.32	4792.41	
6.898e+04												
		-1.571e+04	-6031.97	0.06	0.0	175.0	-270.74	-241.95	-30.93	9.32	-619.78	
2.664e+04												
						350.0	-196.83	-241.95	-30.93	9.32	-6031.97	-
1.571e+04												
24	158	7.079e+04	4068.55	-0.05	0.0	0.0	-355.52	-259.26	-26.50	9.43	4068.55	
7.079e+04												
		-1.995e+04	-5207.29	0.05	0.0	175.0	-281.61	-259.26	-26.50	9.43	-569.37	
2.542e+04												
						350.0	-207.70	-259.26	-26.50	9.43	-5207.29	-
1.995e+04												
24	159	4.982e+04	1169.18	-0.04	0.0	0.0	-311.17	-180.22	-7.08	0.61	1169.18	
4.982e+04												
		-1.326e+04	-1309.72	6.46e-03	0.0	175.0	-237.26	-180.22	-7.08	0.61	-70.27	
1.828e+04												
						350.0	-163.35	-180.22	-7.08	0.61	-1309.72	-
1.326e+04												
24	161	6.922e+04	1301.19	-0.06	0.0	0.0	-311.63	-243.26	-7.89	1.08	1301.19	
6.922e+04												
		-1.592e+04	-1460.77	9.21e-03	0.0	175.0	-237.72	-243.26	-7.89	1.08	-79.79	
2.665e+04												
						350.0	-163.81	-243.26	-7.89	1.08	-1460.77	-
1.592e+04												
24	162	7.104e+04	577.34	-0.05	0.0	0.0	-322.50	-260.57	-3.47	1.19	577.34	
7.104e+04												
		-2.016e+04	-636.10	3.75e-04	0.0	175.0	-248.59	-260.57	-3.47	1.19	-29.38	
2.544e+04												
						350.0	-174.68	-260.57	-3.47	1.19	-636.10	-
2.016e+04												
25	16	3.463e+04	2.047e+04	0.07	0.0	0.0	-568.02	-155.10	103.92	2.70	-1.590e+04	
3.463e+04												
		-1.965e+04	-1.590e+04	-0.21	0.0	175.0	-471.94	-155.10	103.92	2.70	2283.79	
7490.87												
						350.0	-375.86	-155.10	103.92	2.70	2.047e+04	-
1.965e+04												
25	22	2.164e+04	3.295e+04	0.07	0.0	0.0	-668.70	-111.26	166.92	-0.86	-2.548e+04	
2.164e+04												
		-1.730e+04	-2.548e+04	-0.35	0.0	175.0	-572.62	-111.26	166.92	-0.86	3735.39	
2174.65												
						350.0	-476.54	-111.26	166.92	-0.86	3.295e+04	-
1.730e+04												
25	51	1.810e+04	2.564e+04	-0.02	0.0	0.0	15.57	-63.40	-169.41	7.72	2.564e+04	
1.810e+04												
		-4085.58	-3.365e+04	0.40	0.0	175.0	89.48	-63.40	-169.41	7.72	-4008.06	
7009.21												
						350.0	163.39	-63.40	-169.41	7.72	-3.365e+04	-
4085.58												
25	66	2.776e+04	8298.05	-0.21	0.0	0.0	64.20	85.09	-62.07	8.03	8298.05	
1238.56												
		1238.56	-1.345e+04	0.18	0.0	175.0	138.11	85.09	-62.07	8.03	-2576.89	
1.450e+04												
						350.0	212.01	85.09	-62.07	8.03	-1.345e+04	
2.776e+04												
25	67	3.748e+04	1.657e+04	0.28	0.0	0.0	-679.16	-257.59	78.82	-1.80	-1.104e+04	
3.748e+04												
		-4.941e+04	-1.104e+04	-0.18	0.0	175.0	-605.25	-257.59	78.82	-1.80	2768.01	-
5963.42												
						350.0	-531.34	-257.59	78.82	-1.80	1.657e+04	-
4.941e+04												
25	68	3.568e+04	1258.61	0.32	0.0	0.0	-565.93	-246.67	-14.35	-19.70	1258.61	
3.568e+04												
		-5.456e+04	-3774.49	0.07	0.0	175.0	-492.02	-246.67	-14.35	-19.70	-1257.94	-
9440.06												
						350.0	-418.12	-246.67	-14.35	-19.70	-3774.49	-
5.456e+04												
25	78	1.205e+04	2.174e+04	0.04	0.0	0.0	-39.84	-24.32	-164.48	-16.39	2.174e+04	
1.205e+04												
		-8246.82	-3.589e+04	0.46	0.0	175.0	34.07	-24.32	-164.48	-16.39	-7075.12	
1899.22												
						350.0	107.98	-24.32	-164.48	-16.39	-3.589e+04	-
8246.82												
25	79	2.668e+04	3.901e+04	0.03	0.0	0.0	-575.12	-148.18	181.23	22.62	-2.448e+04	
2.668e+04												
		-1.340e+04	-2.448e+04	-0.46	0.0	175.0	-501.21	-148.18	181.23	22.62	7266.24	
6635.99												
						350.0	-427.31	-148.18	181.23	22.62	3.901e+04	-
1.340e+04												
25	98	1.451e+04	4976.21	-0.12	0.0	0.0	-63.44	26.03	-37.90	6.35	4976.21	
7584.33												
		7584.33	-8305.67	0.12	0.0	175.0	10.47	26.03	-37.90	6.35	-1664.73	
1.105e+04												
						350.0	84.38	26.03	-37.90	6.35	-8305.67	
1.451e+04												
25	99	3.114e+04	1.143e+04	0.19	0.0	0.0	-551.52	-198.52	54.66	-0.11	-7716.90	
3.114e+04												
		-3.616e+04	-7716.90	-0.12	0.0	175.0	-477.61	-198.52	54.66	-0.11	1855.85	-
2510.77												

Viale Duca Alessandro n. 11 – 43123 Parma
Cell. 335 1403156 – E mail ing.concari@gmail.com
Sito web: studioaire.it – P.IVA 02561480340

						350.0	-403.70	-198.52	54.66	-0.11	1.143e+04 -
3.616e+04											
25	100	2.995e+04	357.42	0.22	0.0	0.0	-477.11	-191.34	-6.57	-11.89	357.42
2.995e+04											
		-3.955e+04	-1948.24	0.05	0.0	175.0	-403.20	-191.34	-6.57	-11.89	-795.41 -
4797.43											
						350.0	-329.29	-191.34	-6.57	-11.89	-1948.24 -
3.955e+04											
25	110	1.459e+04	1.380e+04	0.04	0.0	0.0	-131.65	-45.64	-105.19	-9.71	1.380e+04
1.459e+04											
		-9142.32	-2.305e+04	0.30	0.0	175.0	-57.75	-45.64	-105.19	-9.71	-4627.30
2725.90											
						350.0	16.16	-45.64	-105.19	-9.71	-2.305e+04 -
9142.32											
25	111	2.413e+04	2.618e+04	0.03	0.0	0.0	-483.31	-126.86	121.94	15.95	-1.654e+04
2.413e+04											
		-1.251e+04	-1.654e+04	-0.30	0.0	175.0	-409.40	-126.86	121.94	15.95	4818.42
5809.30											
						350.0	-335.49	-126.86	121.94	15.95	2.618e+04 -
1.251e+04											
25	126	2.443e+04	1.377e+04	0.04	0.0	0.0	-412.22	-108.43	69.92	1.94	-1.071e+04
2.443e+04											
		-1.352e+04	-1.071e+04	-0.14	0.0	175.0	-338.31	-108.43	69.92	1.94	1529.70
5459.78											
						350.0	-264.40	-108.43	69.92	1.94	1.377e+04 -
1.352e+04											
25	128	1.578e+04	2.208e+04	0.05	0.0	0.0	-479.34	-79.20	111.92	-0.44	-1.709e+04
1.578e+04											
		-1.194e+04	-1.709e+04	-0.23	0.0	175.0	-405.44	-79.20	111.92	-0.44	2497.43
1915.63											
						350.0	-331.53	-79.20	111.92	-0.44	2.208e+04 -
1.194e+04											
25	141	1.544e+04	1.683e+04	-0.01	0.0	0.0	-73.47	-54.84	-111.34	5.50	1.683e+04
1.544e+04											
		-3760.19	-2.214e+04	0.27	0.0	175.0	0.44	-54.84	-111.34	5.50	-2654.11
5837.47											
						350.0	74.35	-54.84	-111.34	5.50	-2.214e+04 -
3760.19											
25	146	2.026e+04	1536.29	0.03	0.0	0.0	-306.91	-89.33	8.24	3.22	-1348.36
2.026e+04											
		-1.100e+04	-1348.36	-1.13e-03	0.0	175.0	-233.00	-89.33	8.24	3.22	93.96
4628.46											
						350.0	-159.10	-89.33	8.24	3.22	1536.29 -
1.100e+04											
25	150	1.984e+04	1664.12	0.04	0.0	0.0	-314.90	-90.00	8.93	3.30	-1460.17
1.984e+04											
		-1.166e+04	-1460.17	-2.47e-03	0.0	175.0	-240.99	-90.00	8.93	3.30	101.98
4093.66											
						350.0	-167.08	-90.00	8.93	3.30	1664.12 -
1.166e+04											
25	152	1.413e+04	5745.68	0.04	0.0	0.0	-341.61	-68.56	29.51	1.82	-4583.64
1.413e+04											
		-9862.52	-4583.64	-0.05	0.0	175.0	-267.70	-68.56	29.51	1.82	581.02
2134.67											
						350.0	-193.79	-68.56	29.51	1.82	5745.68 -
9862.52											
25	157	1.530e+04	2840.39	-0.01	0.0	0.0	-213.32	-55.32	-19.06	2.42	2840.39
1.530e+04											
		-4058.66	-3830.66	0.06	0.0	175.0	-139.42	-55.32	-19.06	2.42	-495.14
5622.64											
						350.0	-65.51	-55.32	-19.06	2.42	-3830.66 -
4058.66											
25	160	1.396e+04	1712.54	0.04	0.0	0.0	-310.88	-67.77	9.19	2.48	-1502.28
1.396e+04											
		-9757.40	-1502.28	-3.80e-03	0.0	175.0	-236.98	-67.77	9.19	2.48	105.13
2102.46											
						350.0	-163.07	-67.77	9.19	2.48	1712.54 -
9757.40											
25	161	1.550e+04	740.23	-0.01	0.0	0.0	-248.15	-56.21	3.98	1.68	-651.81
1.550e+04											
		-4177.79	-651.81	9.18e-03	0.0	175.0	-174.24	-56.21	3.98	1.68	44.21
5659.15											
						350.0	-100.33	-56.21	3.98	1.68	740.23 -
4177.79											
25	162	1.936e+04	1561.47	0.04	0.0	0.0	-307.48	-86.25	8.38	3.12	-1370.35
1.936e+04											
		-1.083e+04	-1370.35	-1.50e-03	0.0	175.0	-233.57	-86.25	8.38	3.12	95.56
4267.60											
						350.0	-159.66	-86.25	8.38	3.12	1561.47 -
1.083e+04											
Pilas.		**M3 mx/mn**	**M2 mx/mn**	**D 2 / D 3**	**Q 2 / Q 3**		**N**	**V 2**	**V 3**	**T**	
		-1.957e+05	-1.920e+05	-1.53	0.0		-5805.07	-1154.04	-1037.41	-122.77	
		2.152e+05	1.907e+05	1.52	0.0		3166.81	1007.09	1045.12	132.16	

Trave	**Cmb**	**M3 mx/mn**	**M2 mx/mn**	**D 2 / D 3**	**Q 2 / Q 3**	**Pos.**	**N**	**V 2**	**V 3**	**T**	**M 2 M 3**
		daN cm	daN cm	cm	daN	cm	daN	daN	daN	daN cm	daN cm daN
cm											
5	21	2.855e+04	2.206e+04	-7.46e-03	-148.24	0.0	-242.43	-147.93	-59.82	12.47	2.206e+04
2.855e+04											
		-3.141e+04	5909.49	-0.04	0.0	135.0	-242.43	-222.05	-59.82	12.47	1.399e+04
3574.21											
						270.0	-242.43	-296.17	-59.82	12.47	5909.49 -
3.141e+04											
5	25	2.894e+04	2.216e+04	-7.21e-03	-114.03	0.0	-240.78	-165.50	-60.32	10.02	2.216e+04
2.894e+04											

Viale Duca Alessandro n. 11 – 43123 Parma
Cell. 335 1403156 – E mail ing.concari@gmail.com
Sito web: studioaire.it – P.IVA 02561480340

		-3.114e+04	5870.10	-0.04	0.0	135.0	-240.78	-222.51	-60.32	10.02	1.401e+04	
2750.38												
						270.0	-240.78	-279.53	-60.32	10.02	5870.10	-
3.114e+04												
5	47	3.338e+04	-6129.38	0.01	-148.24	0.0	259.70	332.01	74.36	16.33	-2.621e+04	-
3.625e+04												
		-3.625e+04	-2.621e+04	-0.05	0.0	135.0	259.70	257.89	74.36	16.33	-1.617e+04	
3564.63												
						270.0	259.70	183.77	74.36	16.33	-6129.38	
3.338e+04												
5	48	3.184e+04	-6451.25	0.01	-148.24	0.0	280.19	320.59	75.98	17.15	-2.697e+04	-
3.471e+04												
		-3.471e+04	-2.697e+04	-0.10	0.0	135.0	280.19	246.47	75.98	17.15	-1.671e+04	
3569.18												
						270.0	280.19	172.35	75.98	17.15	-6451.25	
3.184e+04												
5	51	3.365e+04	-6168.76	0.01	-114.03	0.0	261.36	314.44	73.86	13.87	-2.611e+04	-
3.586e+04												
		-3.586e+04	-2.611e+04	-0.05	0.0	135.0	261.36	257.43	73.86	13.87	-1.614e+04	
2740.79												
						270.0	261.36	200.42	73.86	13.87	-6168.76	
3.365e+04												
5	52	3.211e+04	-6490.64	0.01	-114.03	0.0	281.85	303.02	75.48	14.70	-2.687e+04	-
3.431e+04												
		-3.431e+04	-2.687e+04	-0.10	0.0	135.0	281.85	246.00	75.48	14.70	-1.668e+04	
2745.35												
						270.0	281.85	188.99	75.48	14.70	-6490.64	
3.211e+04												
5	53	4476.24	4148.91	3.56e-03	-114.03	0.0	-16.73	95.32	29.32	0.72	-3736.51	-
6271.81												
		-6271.81	-3736.51	0.03	0.0	135.0	-16.73	38.30	29.32	0.72	206.20	
2747.67												
						270.0	-16.73	-18.71	29.32	0.72	4148.91	
4070.19												
5	58	2.039e+04	2939.12	8.72e-03	-114.03	0.0	-2.03	216.18	25.22	-2.02	-4063.39	-
2.258e+04												
		-2.258e+04	-4063.39	-0.18	0.0	135.0	-2.03	159.16	25.22	-2.02	-562.14	
2754.32												
						270.0	-2.03	102.15	25.22	-2.02	2939.12	
2.039e+04												
5	77	2.972e+04	3054.84	-7.39e-03	-114.03	0.0	-28.50	-171.33	17.69	21.50	-1123.34	
2.972e+04												
		-3.194e+04	-1123.34	0.72	0.0	135.0	-28.50	-228.35	17.69	21.50	965.75	
2736.70												
						270.0	-28.50	-285.36	17.69	21.50	3054.84	-
3.194e+04												
5	79	3.678e+04	987.01	-8.79e-03	-114.03	0.0	-18.70	-223.69	3.50	28.41	648.98	
3.678e+04												
		-3.901e+04	648.98	0.67	0.0	135.0	-18.70	-280.71	3.50	28.41	817.99	
2735.27												
						270.0	-18.70	-337.72	3.50	28.41	987.01	-
3.901e+04												
5	80	2.881e+04	-693.08	0.01	-114.03	0.0	39.60	278.50	-10.40	4.62	-693.08	-
3.099e+04												
		-3.099e+04	-2902.53	-0.80	0.0	135.0	39.60	221.48	-10.40	4.62	-1797.81	
2759.83												
						270.0	39.60	164.47	-10.40	4.62	-2902.53	
2.881e+04												
5	85	3418.03	2748.48	3.56e-03	-114.03	0.0	-9.04	80.94	20.48	4.97	-2763.62	-
4330.85												
		-4330.85	-2763.62	5.26e-03	0.0	135.0	-9.04	23.93	20.48	4.97	-7.57	
2747.88												
						270.0	-9.04	-33.09	20.48	4.97	2748.48	
2129.65												
5	90	1.286e+04	1953.66	6.96e-03	-114.03	0.0	0.62	160.38	17.79	3.15	-2976.36	-
1.505e+04												
		-1.505e+04	-2976.36	-0.13	0.0	135.0	0.62	103.37	17.79	3.15	-511.35	
2752.26												
						270.0	0.62	46.36	17.79	3.15	1953.66	
1.286e+04												
5	109	1.932e+04	2031.06	-5.17e-03	-114.03	0.0	-16.81	-94.29	12.85	18.62	-1047.98	
1.932e+04												
		-2.153e+04	-1047.98	0.46	0.0	135.0	-16.81	-151.31	12.85	18.62	491.54	
2740.65												
						270.0	-16.81	-208.32	12.85	18.62	2031.06	-
2.153e+04												
5	111	2.396e+04	674.75	-6.08e-03	-114.03	0.0	-10.40	-128.66	3.55	23.15	113.53	
2.396e+04												
		-2.618e+04	113.53	0.43	0.0	135.0	-10.40	-185.68	3.55	23.15	394.14	
2739.71												
						270.0	-10.40	-242.69	3.55	23.15	674.75	-
2.618e+04												
5	112	1.841e+04	-768.44	8.96e-03	-114.03	0.0	27.91	201.46	-5.56	7.51	-768.44	-
2.059e+04												
		-2.059e+04	-1878.75	-0.54	0.0	135.0	27.91	144.44	-5.56	7.51	-1323.60	
2755.88												
						270.0	27.91	87.43	-5.56	7.51	-1878.75	
1.841e+04												
5	127	1.886e+04	1.467e+04	-5.10e-03	-114.03	0.0	-162.36	-90.81	-39.66	9.40	1.467e+04	
1.886e+04												
		-2.106e+04	3957.17	-0.03	0.0	135.0	-162.36	-147.83	-39.66	9.40	9311.26	
2748.96												
						270.0	-162.36	-204.84	-39.66	9.40	3957.17	-
2.106e+04												
5	141	2.213e+04	-4068.74	0.01	-114.03	0.0	172.40	229.15	49.79	11.97	-1.751e+04	-
2.434e+04												
		-2.434e+04	-1.751e+04	-0.04	0.0	135.0	172.40	172.13	49.79	11.97	-1.079e+04	
2742.57												

Viale Duca Alessandro n. 11 – 43123 Parma
Cell. 335 1403156 – E mail ing.concari@gmail.com
Sito web: studioaire.it – P.IVA 02561480340

						270.0	172.40	115.12	49.79	11.97	-4068.74	
2.213e+04												
5	142	2.111e+04	-4283.33	9.34e-03	-114.03	0.0	186.06	221.53	50.88	12.52	-1.802e+04	-
2.331e+04												
		-2.331e+04	-1.802e+04	-0.07	0.0	135.0	186.06	164.52	50.88	12.52	-1.115e+04	
2745.60												
						270.0	186.06	107.50	50.88	12.52	-4283.33	
2.111e+04												
5	151	3696.85	2680.24	2.29e-03	-114.03	0.0	-36.89	28.68	-6.61	8.42	2680.24	
2722.77												
		-4926.36	896.47	-9.15e-03	0.0	135.0	-36.89	-28.33	-6.61	8.42	1788.35	
2746.68												
						270.0	-36.89	-85.34	-6.61	8.42	896.47	-
4926.36												
5	157	4323.13	-619.38	5.45e-03	-114.03	0.0	30.17	93.53	12.15	12.34	-3898.98	-
6033.30												
		-6033.30	-3898.98	-0.02	0.0	135.0	30.17	36.52	12.15	12.34	-2259.18	
2745.19												
						270.0	30.17	-20.50	12.15	12.34	-619.38	
3826.72												
5	158	3839.15	-791.04	4.72e-03	-114.03	0.0	41.10	87.44	13.01	12.78	-4304.00	-
5208.16												
		-5208.16	-4304.00	-0.04	0.0	135.0	41.10	30.42	13.01	12.78	-2547.52	
2747.62												
						270.0	41.10	-26.59	13.01	12.78	-791.04	
3006.43												
5	159	2746.12	131.29	3.31e-03	-114.03	0.0	-5.52	58.56	1.66	8.18	-316.04	-
1310.83												
		-1310.83	-316.04	-9.82e-03	0.0	135.0	-5.52	1.54	1.66	8.18	-92.37	
2746.12												
						270.0	-5.52	-55.47	1.66	8.18	131.29	-
893.90												
5	160	2765.19	-40.37	2.58e-03	-114.03	0.0	5.41	52.46	2.52	8.62	-721.05	-
485.69												
		-1714.19	-721.05	-0.03	0.0	135.0	5.41	-4.55	2.52	8.62	-380.71	
2748.55												
						270.0	5.41	-61.56	2.52	8.62	-40.37	-
1714.19												
5	161	2745.83	247.82	4.29e-03	-114.03	0.0	-5.38	59.68	2.78	12.62	-503.20	-
1461.89												
		-1461.89	-503.20	-0.02	0.0	135.0	-5.38	2.66	2.78	12.62	-127.69	
2745.83												
						270.0	-5.38	-54.35	2.78	12.62	247.82	-
743.41												
5	162	2748.26	76.15	3.55e-03	-114.03	0.0	5.55	53.58	3.65	13.06	-908.21	-
636.75												
		-1563.69	-908.21	-0.04	0.0	135.0	5.55	-3.43	3.65	13.06	-416.03	
2748.26												
						270.0	5.55	-60.45	3.65	13.06	76.15	-
1563.69												
6	16	3337.63	3580.71	6.04e-03	-137.26	0.0	-124.50	160.68	-23.56	0.03	3580.71	-
1.967e+04												
		-1.967e+04	-2308.44	0.04	0.0	125.0	-124.50	92.05	-23.56	0.03	636.13	-
3879.34												
						250.0	-124.50	23.42	-23.56	0.03	-2308.44	
3337.63												
6	23	-2869.43	6115.84	3.00e-03	-137.26	0.0	-29.42	65.12	-84.92	0.71	6115.84	-
6720.53												
		-7596.90	-1.511e+04	0.13	0.0	125.0	-29.42	-3.51	-84.92	0.71	-4499.02	-
2869.43												
						250.0	-29.42	-72.13	-84.92	0.71	-1.511e+04	-
7596.90												
6	25	-376.46	5873.97	-1.29e-03	-105.58	0.0	16.70	54.65	-83.54	2.50	5873.97	-
3907.80												
		-3907.80	-1.501e+04	0.14	0.0	125.0	16.70	1.86	-83.54	2.50	-4568.23	-
376.46												
						250.0	16.70	-50.94	-83.54	2.50	-1.501e+04	-
3444.03												
6	26	9046.08	5549.40	2.76e-03	-105.58	0.0	-41.24	154.47	-54.80	4.30	5549.40	-
1.637e+04												
		-1.637e+04	-8150.28	0.12	0.0	125.0	-41.24	101.68	-54.80	4.30	-1300.44	-
364.32												
						250.0	-41.24	48.89	-54.80	4.30	-8150.28	
9046.08												
6	48	3175.31	2.365e+04	5.98e-03	-137.26	0.0	-207.02	151.33	120.47	-8.39	-6461.98	-
1.750e+04												
		-1.750e+04	-6461.98	-0.21	0.0	125.0	-207.02	82.70	120.47	-8.39	8596.15	-
2873.33												
						250.0	-207.02	14.07	120.47	-8.39	2.365e+04	
3175.31												
6	50	7328.19	2.376e+04	4.51e-03	-105.58	0.0	-160.90	140.86	121.85	-6.59	-6703.85	-
1.469e+04												
		-1.469e+04	-6703.85	-0.20	0.0	125.0	-160.90	88.06	121.85	-6.59	8526.95	-
380.36												
						250.0	-160.90	35.27	121.85	-6.59	2.376e+04	
7328.19												
6	54	2.695e+04	2894.56	-6.91e-03	-105.58	0.0	-65.69	-203.14	-14.06	-7.78	2894.56	
2.695e+04												
		-3.703e+04	-693.25	-0.63	0.0	125.0	-65.69	-255.93	-14.06	-7.78	1100.66	-
1742.26												
						250.0	-65.69	-308.72	-14.06	-7.78	-693.25	-
3.703e+04												
6	55	3.857e+04	7803.78	0.01	-105.58	0.0	-114.10	401.57	41.92	3.34	-2748.48	-
4.863e+04												
		-4.863e+04	-2748.48	0.57	0.0	125.0	-114.10	348.78	41.92	3.34	2527.65	-
1730.20												
						250.0	-114.10	295.99	41.92	3.34	7803.78	
3.857e+04												

Viale Duca Alessandro n. 11 – 43123 Parma
Cell. 335 1403156 – E mail ing.concari@gmail.com
Sito web: studioaire.it – P.IVA 02561480340

6 56 3.742e+04 8720.04 0.01 -105.58 0.0 -103.97 392.45 50.47 4.23 -3989.86 -
4.749e+04
-4.749e+04 -3989.86 0.57 0.0 125.0 -103.97 339.65 50.47 4.23 2365.09 -
1736.51
250.0 -103.97 286.86 50.47 4.23 8720.04
3.742e+04
6 60 4.056e+04 8866.72 0.01 -105.58 0.0 -106.23 417.58 50.93 1.95 -3954.91 -
5.063e+04
-5.063e+04 -3954.91 0.39 0.0 125.0 -106.23 364.79 50.93 1.95 2455.91 -
1735.15
250.0 -106.23 311.99 50.93 1.95 8866.72
4.056e+04
6 68 4.450e+04 5931.88 0.01 -105.58 0.0 -89.46 449.08 31.23 0.63 -1902.44 -
5.458e+04
-5.458e+04 -1902.44 0.04 0.0 125.0 -89.46 396.29 31.23 0.63 2014.72 -
1740.26
250.0 -89.46 343.50 31.23 0.63 5931.88
4.450e+04
6 86 1.396e+04 1922.73 -4.01e-03 -105.58 0.0 -74.15 -99.23 -4.39 -5.88 1922.73
1.396e+04
-2.404e+04 777.28 -0.42 0.0 125.0 -74.15 -152.02 -4.39 -5.88 1350.01 -
1740.22
250.0 -74.15 -204.82 -4.39 -5.88 777.28 -
2.404e+04
6 87 2.558e+04 6333.25 7.60e-03 -105.58 0.0 -105.64 297.67 32.25 1.43 -1776.65 -
3.564e+04
-3.564e+04 -1776.65 0.37 0.0 125.0 -105.64 244.88 32.25 1.43 2278.30 -
1732.24
250.0 -105.64 192.08 32.25 1.43 6333.25
2.558e+04
6 88 2.484e+04 6932.97 8.41e-03 -105.58 0.0 -99.02 291.82 37.87 2.01 -2592.78 -
3.491e+04
-3.491e+04 -2592.78 0.37 0.0 125.0 -99.02 239.03 37.87 2.01 2170.09 -
1736.47
250.0 -99.02 186.24 37.87 2.01 6932.97
2.484e+04
6 92 2.690e+04 7030.65 8.63e-03 -105.58 0.0 -100.49 308.27 38.17 0.52 -2569.26 -
3.697e+04
-3.697e+04 -2569.26 0.25 0.0 125.0 -100.49 255.48 38.17 0.52 2230.70 -
1735.54
250.0 -100.49 202.69 38.17 0.52 7030.65
2.690e+04
6 100 2.948e+04 5112.49 9.46e-03 -105.58 0.0 -89.51 328.97 25.28 -0.35 -1225.24 -
3.956e+04
-3.956e+04 -1225.24 0.02 0.0 125.0 -89.51 276.18 25.28 -0.35 1943.62 -
1738.89
250.0 -89.51 223.39 25.28 -0.35 5112.49
2.948e+04
6 126 1658.52 2404.50 4.15e-03 -105.58 0.0 -88.25 113.55 -15.80 -0.33 2404.50 -
1.353e+04
-1.353e+04 -1546.10 0.03 0.0 125.0 -88.25 60.76 -15.80 -0.33 429.20 -
2637.42
250.0 -88.25 7.97 -15.80 -0.33 -1546.10
1658.52
6 127 -378.97 3959.39 -8.09e-04 -105.58 0.0 -2.00 52.52 -55.94 0.80 3959.39 -
3644.39
-3712.45 -1.002e+04 0.09 0.0 125.0 -2.00 -0.27 -55.94 0.80 -3032.70 -
378.97
250.0 -2.00 -53.06 -55.94 0.80 -1.002e+04 -
3712.45
6 128 4614.29 3743.02 2.11e-03 -105.58 0.0 -40.62 119.07 -36.78 2.00 3743.02 -
1.195e+04
-1.195e+04 -5451.37 0.07 0.0 125.0 -40.62 66.28 -36.78 2.00 -854.17 -
370.87
250.0 -40.62 13.49 -36.78 2.00 -5451.37
4614.29
6 129 -1964.15 4094.59 2.13e-03 -105.58 0.0 -24.87 49.85 -56.71 0.13 4094.59 -
4896.03
-5631.17 -1.008e+04 0.08 0.0 125.0 -24.87 -2.94 -56.71 0.13 -2994.23 -
1964.15
250.0 -24.87 -55.73 -56.71 0.13 -1.008e+04 -
5631.17
6 140 3469.03 1.582e+04 3.06e-03 -105.58 0.0 -120.40 109.99 80.99 -5.26 -4425.82 -
1.083e+04
-1.083e+04 -4425.82 -0.14 0.0 125.0 -120.40 57.20 80.99 -5.26 5697.42 -
381.57
250.0 -120.40 4.41 80.99 -5.26 1.582e+04
3469.03
6 142 1550.30 1.576e+04 4.12e-03 -105.58 0.0 -143.26 107.32 80.21 -5.94 -4290.62 -
1.208e+04
-1.208e+04 -4290.62 -0.14 0.0 125.0 -143.26 54.53 80.21 -5.94 5735.88 -
1966.75
250.0 -143.26 1.74 80.21 -5.94 1.576e+04
1550.30
6 149 3244.77 4062.55 2.19e-03 -105.58 0.0 -74.15 108.16 16.51 -1.53 -64.49 -
1.060e+04
-1.060e+04 -64.49 -0.02 0.0 125.0 -74.15 55.37 16.51 -1.53 1999.03 -
376.69
250.0 -74.15 2.58 16.51 -1.53 4062.55
3244.77
6 150 1600.15 4012.61 3.38e-03 -105.58 0.0 -93.76 105.87 15.84 -2.10 51.40 -
1.167e+04
-1.167e+04 51.40 -0.03 0.0 125.0 -93.76 53.08 15.84 -2.10 2032.00 -
1735.42
250.0 -93.76 0.29 15.84 -2.10 4012.61
1600.15
6 151 -377.10 896.08 9.50e-04 -105.58 0.0 -31.91 49.12 -11.78 -1.92 896.08 -
3222.94

Viale Duca Alessandro n. 11 – 43123 Parma
Cell. 335 1403156 – E mail ing.concari@gmail.com
Sito web: studioaire.it – P.IVA 02561480340

		-4141.92	-2047.78	0.01	0.0	125.0	-31.91	-3.68	-11.78	-1.92	-575.85	-
382.98												
						250.0	-31.91	-56.47	-11.78	-1.92	-2047.78	-
4141.92												
6	153	-1700.09	1011.97	2.29e-03	-105.58	0.0	-51.51	46.83	-12.44	-2.50	1011.97	-
4295.78												
		-5786.54	-2097.72	6.28e-03	0.0	125.0	-51.51	-5.96	-12.44	-2.50	-542.88	-
1741.71												
						250.0	-51.51	-58.75	-12.44	-2.50	-2097.72	-
5786.54												
6	156	2317.66	5865.36	2.10e-03	-105.58	0.0	-78.77	100.54	27.10	-2.42	-910.79	-
9646.61												
		-9646.61	-910.79	-0.04	0.0	125.0	-78.77	47.75	27.10	-2.42	2477.29	-
378.64												
						250.0	-78.77	-5.04	27.10	-2.42	5865.36	
2290.42												
6	158	708.78	5815.42	3.33e-03	-105.58	0.0	-98.37	98.25	26.44	-2.99	-794.90	-
1.072e+04												
		-1.072e+04	-794.90	-0.05	0.0	125.0	-98.37	45.46	26.44	-2.99	2510.26	-
1737.37												
						250.0	-98.37	-7.33	26.44	-2.99	5815.42	
645.79												
6	159	-364.80	130.25	1.07e-03	-105.58	0.0	-39.39	48.26	-0.74	-2.60	130.25	-
3117.58												
		-4249.29	-53.53	-8.54e-03	0.0	125.0	-39.39	-4.53	-0.74	-2.60	38.36	-
383.98												
						250.0	-39.39	-57.32	-0.74	-2.60	-53.53	-
4249.29												
6	160	2424.28	3605.21	2.05e-03	-105.58	0.0	-70.29	101.50	14.59	-1.64	-42.85	-
9766.02												
		-9766.02	-42.85	-0.02	0.0	125.0	-70.29	48.71	14.59	-1.64	1781.18	-
377.50												
						250.0	-70.29	-4.08	14.59	-1.64	3605.21	
2412.10												
6	161	-1687.79	246.14	2.40e-03	-105.58	0.0	-58.99	45.98	-1.40	-3.18	246.14	-
4190.41												
		-5893.91	-103.47	-0.01	0.0	125.0	-58.99	-6.81	-1.40	-3.18	71.33	-
1742.71												
						250.0	-58.99	-59.61	-1.40	-3.18	-103.47	-
5893.91												
6	162	815.39	3555.27	3.25e-03	-105.58	0.0	-89.89	99.22	13.93	-2.22	73.04	-
1.084e+04												
		-1.084e+04	73.04	-0.03	0.0	125.0	-89.89	46.43	13.93	-2.22	1814.15	-
1736.23												
						250.0	-89.89	-6.37	13.93	-2.22	3555.27	
767.48												
7	26	1.839e+04	1.787e+04	-9.25e-03	-68.42	0.0	-39.12	-196.53	-60.17	0.43	1.787e+04	
1.839e+04												
		-1.899e+04	8124.77	-0.02	0.0	81.0	-39.12	-230.74	-60.17	0.43	1.300e+04	
1083.11												
						162.0	-39.12	-264.95	-60.17	0.43	8124.77	-
1.899e+04												
7	47	2.095e+04	-9019.15	9.19e-03	-88.94	0.0	12.84	307.67	-47.88	16.85	-9019.15	-
2.169e+04												
		-2.169e+04	-1.678e+04	0.02	0.0	81.0	12.84	263.19	-47.88	16.85	-1.290e+04	
1429.92												
						162.0	12.84	218.72	-47.88	16.85	-1.678e+04	
2.095e+04												
7	50	1.922e+04	3276.87	0.01	-68.42	0.0	-25.75	275.06	-166.84	16.29	3276.87	-
1.979e+04												
		-1.979e+04	-2.375e+04	0.04	0.0	81.0	-25.75	240.85	-166.84	16.29	-1.024e+04	
1101.32												
						162.0	-25.75	206.64	-166.84	16.29	-2.375e+04	
1.922e+04												
7	54	1.079e+04	688.77	-5.88e-03	-68.42	0.0	31.23	171.06	25.44	-1.13	-3483.05	-
1.138e+04												
		-1.138e+04	-3483.05	0.11	0.0	81.0	31.23	136.85	25.44	-1.13	-1397.14	
1088.02												
						162.0	31.23	102.64	25.44	-1.13	688.77	
1.079e+04												
7	55	1.074e+04	1.415e+04	4.74e-03	-68.42	0.0	-60.79	-101.96	-135.25	17.82	1.415e+04	
1.074e+04												
		-1.132e+04	-7808.63	-0.11	0.0	81.0	-60.79	-136.17	-135.25	17.82	3171.62	
1096.11												
						162.0	-60.79	-170.38	-135.25	17.82	-7808.63	-
1.132e+04												
7	60	1882.83	1.128e+04	0.01	-68.42	0.0	-52.50	60.02	-123.19	22.59	1.128e+04	-
2382.76												
		-2382.76	-8860.99	-0.24	0.0	81.0	-52.50	25.82	-123.19	22.59	1209.18	
1093.81												
						162.0	-52.50	-8.39	-123.19	22.59	-8860.99	
1799.47												
7	70	2.396e+04	-2581.21	0.01	-68.42	0.0	14.39	333.70	-4.95	11.07	-2581.21	-
2.456e+04												
		-2.456e+04	-3670.65	0.05	0.0	81.0	14.39	299.49	-4.95	11.07	-3125.93	
1086.17												
						162.0	14.39	265.28	-4.95	11.07	-3670.65	
2.396e+04												
7	86	6994.13	-419.51	-4.07e-03	-68.42	0.0	15.28	124.21	-2.48	2.11	-419.51	-
7586.29												
		-7586.29	-781.85	0.08	0.0	81.0	15.28	90.00	-2.48	2.11	-600.68	
1089.38												
						162.0	15.28	55.79	-2.48	2.11	-781.85	
6994.13												
7	87	6944.43	1.109e+04	2.92e-03	-68.42	0.0	-44.84	-55.11	-107.33	14.57	1.109e+04	
6944.43												
		-7525.84	-6338.01	-0.07	0.0	81.0	-44.84	-89.32	-107.33	14.57	2375.16	
1094.75												

Viale Duca Alessandro n. 11 – 43123 Parma
Cell. 335 1403156 – E mail ing.concari@gmail.com
Sito web: studioaire.it – P.IVA 02561480340

						162.0	-44.84	-123.53	-107.33	14.57	-6338.01	-
7525.84												
7	92	1440.71	9205.65	8.59e-03	-68.42	0.0	-39.42	51.34	-99.47	17.71	9205.65	-
1679.92												
		-1679.92	-7028.46	-0.16	0.0	81.0	-39.42	17.13	-99.47	17.71	1088.60	
1093.23												
						162.0	-39.42	-17.08	-99.47	17.71	-7028.46	
1095.47												
7	102	1.566e+04	158.67	7.02e-03	-68.42	0.0	4.25	231.19	-22.37	10.13	158.67	-
1.625e+04												
		-1.625e+04	-3633.26	0.03	0.0	81.0	4.25	196.98	-22.37	10.13	-1737.29	
1088.18												
						162.0	4.25	162.77	-22.37	10.13	-3633.26	
1.566e+04												
7	128	1.199e+04	1.170e+04	-6.58e-03	-68.42	0.0	-25.43	-117.53	-38.70	1.09	1.170e+04	
1.199e+04												
		-1.259e+04	5434.65	-0.01	0.0	81.0	-25.43	-151.74	-38.70	1.09	8569.66	
1086.21												
						162.0	-25.43	-185.95	-38.70	1.09	5434.65	-
1.259e+04												
7	140	1.289e+04	1974.23	8.69e-03	-68.42	0.0	-16.52	196.86	-109.82	11.66	1974.23	-
1.346e+04												
		-1.346e+04	-1.582e+04	0.03	0.0	81.0	-16.52	162.66	-109.82	11.66	-6920.86	
1098.36												
						162.0	-16.52	128.45	-109.82	11.66	-1.582e+04	
1.289e+04												
7	141	1.399e+04	-6096.90	5.96e-03	-68.42	0.0	8.82	210.51	-31.35	11.55	-6096.90	-
1.457e+04												
		-1.457e+04	-1.118e+04	0.01	0.0	81.0	8.82	176.30	-31.35	11.55	-8636.51	
1098.93												
						162.0	8.82	142.09	-31.35	11.55	-1.118e+04	
1.399e+04												
7	149	1103.77	6366.07	3.95e-04	-68.42	0.0	-18.93	30.90	-64.41	5.68	6366.07	-
25.80												
		-561.19	-4068.47	7.33e-03	0.0	81.0	-18.93	-3.30	-64.41	5.68	1148.80	
1091.96												
						162.0	-18.93	-37.51	-64.41	5.68	-4068.47	-
561.19												
7	152	2278.04	6500.84	-1.22e-03	-68.42	0.0	-17.44	2.49	-50.12	4.33	6500.84	
2274.45												
		-2863.62	-1618.13	3.38e-03	0.0	81.0	-17.44	-31.72	-50.12	4.33	2441.35	
1090.87												
						162.0	-17.44	-65.93	-50.12	4.33	-1618.13	-
2863.62												
7	156	2241.23	4554.75	1.83e-03	-68.42	0.0	-15.66	65.37	-64.34	6.44	4554.75	-
2816.34												
		-2816.34	-5868.25	9.00e-03	0.0	81.0	-15.66	31.16	-64.34	6.44	-656.75	
1093.30												
						162.0	-15.66	-3.05	-64.34	6.44	-5868.25	
2232.03												
7	157	3130.47	-1919.10	-7.33e-04	-68.42	0.0	4.73	76.46	-1.44	6.56	-1919.10	-
3713.85												
		-3713.85	-2153.02	-4.84e-03	0.0	81.0	4.73	42.25	-1.44	6.56	-2036.06	
1093.77												
						162.0	4.73	8.04	-1.44	6.56	-2153.02	
3130.47												
7	160	1093.06	5588.61	-2.64e-04	-68.42	0.0	-16.61	31.97	-56.78	5.32	5588.61	-
111.86												
		-475.03	-3610.37	6.00e-03	0.0	81.0	-16.61	-2.24	-56.78	5.32	989.12	
1092.01												
						162.0	-16.61	-36.45	-56.78	5.32	-3610.37	-
475.03												
7	161	1184.98	104.85	-2.02e-03	-68.42	0.0	3.78	43.05	6.11	5.43	-885.24	-
1009.36												
		-1009.36	-885.24	-7.81e-03	0.0	81.0	3.78	8.84	6.11	5.43	-390.20	
1092.47												
						162.0	3.78	-25.36	6.11	5.43	104.85	
423.41												
8	25	1628.94	1.597e+04	-0.02	-105.58	0.0	52.77	29.77	88.83	-5.47	-6238.25	
592.30												
		-5163.94	-6238.25	-0.09	0.0	125.0	52.77	-23.02	88.83	-5.47	4865.00	
1013.63												
						250.0	52.77	-75.82	88.83	-5.47	1.597e+04	-
5163.94												
8	48	1.904e+04	-2607.34	0.02	-137.26	0.0	-330.56	253.26	-80.60	9.87	-2607.34	-
2.712e+04												
		-2.712e+04	-2.276e+04	0.03	0.0	125.0	-330.56	184.63	-80.60	9.87	-1.268e+04	
250.00												
						250.0	-330.56	116.00	-80.60	9.87	-2.276e+04	
1.904e+04												
8	50	2.191e+04	-3241.10	0.02	-105.58	0.0	-320.97	247.08	-73.44	8.05	-3241.10	-
2.667e+04												
		-2.667e+04	-2.160e+04	0.03	0.0	125.0	-320.97	194.29	-73.44	8.05	-1.242e+04	
918.74												
						250.0	-320.97	141.50	-73.44	8.05	-2.160e+04	
2.191e+04												
8	54	2.515e+04	3503.95	-5.98e-03	-105.58	0.0	11.10	-171.73	-52.24	-7.33	3503.95	
2.515e+04												
		-3.098e+04	-9667.11	-0.59	0.0	125.0	11.10	-224.52	-52.24	-7.33	-3081.58	
381.15												
						250.0	11.10	-277.31	-52.24	-7.33	-9667.11	-
3.098e+04												
8	55	4.683e+04	5205.42	8.24e-03	-105.58	0.0	-293.22	450.11	77.05	9.81	-1.417e+04	-
5.250e+04												
		-5.250e+04	-1.417e+04	0.47	0.0	125.0	-293.22	397.32	77.05	9.81	-4481.49	
462.20												
						250.0	-293.22	344.53	77.05	9.81	5205.42	
4.683e+04												

Viale Duca Alessandro n. 11 – 43123 Parma
Cell. 335 1403156 – E mail ing.concari@gmail.com
Sito web: studioaire.it – P.IVA 02561480340

8	67	5.338e+04	2800.74	9.06e-03	-105.58	0.0	-263.32	502.57	50.47	-6.18	-9858.29	-
5.906e+04												
		-5.906e+04	-9858.29	0.30	0.0	125.0	-263.32	449.77	50.47	-6.18	-3528.77	
462.51												
						250.0	-263.32	396.98	50.47	-6.18	2800.74	
5.338e+04												
8	71	2.227e+04	5303.27	-0.02	-105.58	0.0	-225.57	253.55	74.11	-3.90	-1.327e+04	-
2.792e+04												
		-2.792e+04	-1.327e+04	0.03	0.0	125.0	-225.57	200.76	74.11	-3.90	-3981.75	
473.33												
						250.0	-225.57	147.97	74.11	-3.90	5303.27	
2.227e+04												
8	86	1.180e+04	434.04	-3.72e-03	-105.58	0.0	-41.50	-64.88	-29.83	-4.39	434.04	
1.180e+04												
		-1.761e+04	-7096.68	-0.41	0.0	125.0	-41.50	-117.67	-29.83	-4.39	-3331.32	
395.05												
						250.0	-41.50	-170.46	-29.83	-4.39	-7096.68	-
1.761e+04												
8	87	3.346e+04	2634.99	6.00e-03	-105.58	0.0	-240.62	343.27	54.64	6.87	-1.110e+04	-
3.916e+04												
		-3.916e+04	-1.110e+04	0.29	0.0	125.0	-240.62	290.47	54.64	6.87	-4231.74	
448.31												
						250.0	-240.62	237.68	54.64	6.87	2634.99	
3.346e+04												
8	99	3.777e+04	1074.68	6.54e-03	-105.58	0.0	-221.23	377.78	37.37	-3.64	-8293.15	-
4.347e+04												
		-4.347e+04	-8293.15	0.18	0.0	125.0	-221.23	324.99	37.37	-3.64	-3609.23	
448.53												
						250.0	-221.23	272.20	37.37	-3.64	1074.68	
3.777e+04												
8	103	1.734e+04	2707.50	-0.01	-105.58	0.0	-196.37	214.26	52.80	-2.14	-1.052e+04	-
2.303e+04												
		-2.303e+04	-1.052e+04	0.01	0.0	125.0	-196.37	161.47	52.80	-2.14	-3906.44	
455.69												
						250.0	-196.37	108.68	52.80	-2.14	2707.50	
1.734e+04												
8	127	1365.42	1.032e+04	-0.01	-105.58	0.0	31.19	35.05	57.09	-2.80	-3948.51	-
84.27												
		-4518.76	-3948.51	-0.06	0.0	125.0	31.19	-17.74	57.09	-2.80	3187.54	
997.94												
						250.0	31.19	-70.53	57.09	-2.80	1.032e+04	-
4518.76												
8	140	1.353e+04	-1950.41	0.01	-105.58	0.0	-217.98	179.93	-51.09	6.21	-1950.41	-
1.826e+04												
		-1.826e+04	-1.472e+04	0.02	0.0	125.0	-217.98	127.14	-51.09	6.21	-8336.85	
934.68												
						250.0	-217.98	74.35	-51.09	6.21	-1.472e+04	
1.353e+04												
8	142	1.226e+04	-1654.10	0.01	-105.58	0.0	-221.97	174.93	-54.59	6.92	-1654.10	-
1.827e+04												
		-1.827e+04	-1.530e+04	0.02	0.0	125.0	-221.97	122.13	-54.59	6.92	-8477.29	
295.54												
						250.0	-221.97	69.34	-54.59	6.92	-1.530e+04	
1.226e+04												
8	149	1.054e+04	-1832.40	1.70e-03	-105.58	0.0	-153.34	155.71	18.12	0.40	-6363.35	-
1.519e+04												
		-1.519e+04	-6363.35	-0.06	0.0	125.0	-153.34	102.92	18.12	0.40	-4097.87	
969.88												
						250.0	-153.34	50.13	18.12	0.40	-1832.40	
1.054e+04												
8	150	9451.71	-2327.14	1.95e-03	-105.58	0.0	-156.77	151.42	15.13	1.00	-6109.36	-
1.521e+04												
		-1.521e+04	-6109.36	-0.07	0.0	125.0	-156.77	98.63	15.13	1.00	-4218.25	
422.05												
						250.0	-156.77	45.84	15.13	1.00	-2327.14	
9451.71												
8	151	1066.25	1292.11	-2.20e-03	-105.58	0.0	-3.35	43.51	6.31	1.47	-284.92	-
1166.79												
		-3486.46	-284.92	-0.01	0.0	125.0	-3.35	-9.28	6.31	1.47	503.59	
972.83												
						250.0	-3.35	-62.07	6.31	1.47	1292.11	-
3486.46												
8	152	8748.30	521.76	-2.56e-03	-105.58	0.0	-129.00	141.37	28.10	-0.43	-6502.10	-
1.340e+04												
		-1.340e+04	-6502.10	-0.07	0.0	125.0	-129.00	88.58	28.10	-0.43	-2990.17	
975.79												
						250.0	-129.00	35.78	28.10	-0.43	521.76	
8748.30												
8	157	501.55	1922.97	2.06e-03	-105.58	0.0	-25.19	43.73	-23.77	4.36	1922.97	-
1755.80												
		-4019.91	-4019.41	7.95e-03	0.0	125.0	-25.19	-9.06	-23.77	4.36	-1048.22	
411.60												
						250.0	-25.19	-61.85	-23.77	4.36	-4019.41	-
4019.91												
8	159	1026.93	630.97	-4.99e-04	-105.58	0.0	-11.98	45.63	-6.39	2.54	630.97	-
1437.42												
		-3228.39	-965.76	-3.19e-03	0.0	125.0	-11.98	-7.16	-6.39	2.54	-167.39	
966.55												
						250.0	-11.98	-59.96	-6.39	2.54	-965.76	-
3228.39												
8	160	9006.37	-1736.11	1.48e-03	-105.58	0.0	-137.64	143.48	15.40	0.64	-5586.20	-
1.367e+04												
		-1.367e+04	-5586.20	-0.06	0.0	125.0	-137.64	90.69	15.40	0.64	-3661.15	
969.51												
						250.0	-137.64	37.90	15.40	0.64	-1736.11	
9006.37												
8	161	570.41	884.95	-3.30e-04	-105.58	0.0	-15.40	41.34	-9.38	3.15	884.95	-
1449.09												

Viale Duca Alessandro n. 11 – 43123 Parma
Cell. 335 1403156 – E mail ing.concari@gmail.com
Sito web: studioaire.it – P.IVA 02561480340

		-4312.39	-1460.49	-6.89e-03	0.0	125.0	-15.40	-11.45	-9.38	3.15	-287.77	
418.71												
						250.0	-15.40	-64.24	-9.38	3.15	-1460.49	-
4312.39												
8	162	7922.37	-2230.84	1.73e-03	-105.58	0.0	-141.06	139.19	12.41	1.24	-5332.22	-
1.368e+04												
		-1.368e+04	-5332.22	-0.06	0.0	125.0	-141.06	86.40	12.41	1.24	-3781.53	
421.68												
						250.0	-141.06	33.61	12.41	1.24	-2230.84	
7922.37												
9	24	3.758e+04	-1.336e+04	-0.02	-59.30	0.0	-209.79	-668.39	171.96	-41.26	-3.193e+04	
3.758e+04												
		-3.781e+04	-3.193e+04	-0.03	0.0	54.0	-209.79	-698.04	171.96	-41.26	-2.265e+04	
681.48												
						108.0	-209.79	-727.69	171.96	-41.26	-1.336e+04	-
3.781e+04												
9	25	2.863e+04	-1.599e+04	-0.02	-45.61	0.0	-245.62	-509.06	92.03	-6.87	-2.593e+04	
2.863e+04												
		-2.881e+04	-2.593e+04	0.04	0.0	54.0	-245.62	-531.86	92.03	-6.87	-2.096e+04	
524.35												
						108.0	-245.62	-554.67	92.03	-6.87	-1.599e+04	-
2.881e+04												
9	48	2.191e+04	2.281e+04	0.02	-59.30	0.0	318.18	437.86	3.94	-73.73	2.238e+04	-
2.218e+04												
		-2.218e+04	2.238e+04	-0.13	0.0	54.0	318.18	408.21	3.94	-73.73	2.259e+04	
664.86												
						108.0	318.18	378.57	3.94	-73.73	2.281e+04	
2.191e+04												
9	49	3.091e+04	2.839e+04	0.02	-45.61	0.0	282.35	597.19	-75.99	-39.34	2.839e+04	-
3.113e+04												
		-3.113e+04	2.018e+04	-0.06	0.0	54.0	282.35	574.39	-75.99	-39.34	2.428e+04	
507.73												
						108.0	282.35	551.58	-75.99	-39.34	2.018e+04	
3.091e+04												
9	58	2.089e+04	9520.62	5.24e-03	-45.61	0.0	42.33	-365.83	151.78	-55.14	-7102.92	
2.089e+04												
		-2.108e+04	-7102.92	-0.16	0.0	54.0	42.33	-388.64	151.78	-55.14	1208.85	
519.13												
						108.0	42.33	-411.44	151.78	-55.14	9520.62	-
2.108e+04												
9	69	4.116e+04	-1882.05	-0.02	-45.61	0.0	63.11	-741.33	17.43	-37.47	-3814.45	
4.116e+04												
		-4.136e+04	-3814.45	-0.07	0.0	54.0	63.11	-764.14	17.43	-37.47	-2848.25	
514.54												
						108.0	63.11	-786.94	17.43	-37.47	-1882.05	-
4.136e+04												
9	70	1.790e+04	9780.03	0.03	-45.61	0.0	-4.67	356.09	138.47	-45.62	-5238.19	-
1.809e+04												
		-1.809e+04	-5238.19	-0.03	0.0	54.0	-4.67	333.29	138.47	-45.62	2270.92	
521.22												
						108.0	-4.67	310.48	138.47	-45.62	9780.03	
1.790e+04												
9	72	3.034e+04	6371.82	0.03	-45.61	0.0	-21.62	586.47	91.09	-37.97	-3416.31	-
3.053e+04												
		-3.053e+04	-3416.31	-0.01	0.0	54.0	-21.62	563.66	91.09	-37.97	1477.75	
520.85												
						108.0	-21.62	540.86	91.09	-37.97	6371.82	
3.034e+04												
9	90	1.556e+04	7007.92	4.13e-03	-45.61	0.0	34.95	-267.15	118.18	-49.16	-5905.83	
1.556e+04												
		-1.575e+04	-5905.83	-0.12	0.0	54.0	34.95	-289.95	118.18	-49.16	551.05	
518.64												
						108.0	34.95	-312.76	118.18	-49.16	7007.92	-
1.575e+04												
9	101	2.887e+04	-465.76	-0.01	-45.61	0.0	48.59	-513.64	30.09	-37.59	-3747.58	
2.887e+04												
		-2.907e+04	-3747.58	-0.06	0.0	54.0	48.59	-536.44	30.09	-37.59	-2106.67	
515.62												
						108.0	48.59	-559.25	30.09	-37.59	-465.76	-
2.907e+04												
9	102	9868.34	7184.00	0.02	-45.61	0.0	4.05	207.33	109.47	-42.86	-4679.51	-
1.006e+04												
		-1.006e+04	-4679.51	-0.04	0.0	54.0	4.05	184.52	109.47	-42.86	1252.25	
520.02												
						108.0	4.05	161.71	109.47	-42.86	7184.00	
9868.34												
9	104	1.805e+04	4955.53	0.02	-45.61	0.0	-7.09	358.78	78.44	-37.84	-3483.18	-
1.824e+04												
		-1.824e+04	-3483.18	-0.02	0.0	54.0	-7.09	335.97	78.44	-37.84	736.17	
519.77												
						108.0	-7.09	313.16	78.44	-37.84	4955.53	
1.805e+04												
9	127	1.929e+04	-1.034e+04	-0.01	-45.61	0.0	-163.12	-336.20	65.78	-11.94	-1.744e+04	
1.929e+04												
		-1.948e+04	-1.744e+04	0.03	0.0	54.0	-163.12	-359.01	65.78	-11.94	-1.389e+04	
521.75												
						108.0	-163.12	-381.82	65.78	-11.94	-1.034e+04	-
1.948e+04												
9	130	2.513e+04	-8778.99	-0.01	-45.61	0.0	-139.61	-444.33	116.41	-30.45	-2.135e+04	
2.513e+04												
		-2.532e+04	-2.135e+04	-0.02	0.0	54.0	-139.61	-467.13	116.41	-30.45	-1.507e+04	
523.19												
						108.0	-139.61	-489.94	116.41	-30.45	-8778.99	-
2.532e+04												
9	139	2.033e+04	1.877e+04	0.02	-45.61	0.0	188.85	401.30	-46.24	-33.59	1.877e+04	-
2.054e+04												
		-2.054e+04	1.378e+04	-0.04	0.0	54.0	188.85	378.49	-46.24	-33.59	1.627e+04	
510.67												

Viale Duca Alessandro n. 11 – 43123 Parma
Cell. 335 1403156 – E mail ing.concari@gmail.com
Sito web: studioaire.it – P.IVA 02561480340

						108.0	188.85	355.68	-46.24	-33.59	1.378e+04	
2.033e+04												
9	142	1.450e+04	1.533e+04	0.02	-45.61	0.0	212.37	293.17	4.39	-52.10	1.486e+04	-
1.470e+04												
		-1.470e+04	1.486e+04	-0.09	0.0	54.0	212.37	270.37	4.39	-52.10	1.509e+04	
512.11												
						108.0	212.37	247.56	4.39	-52.10	1.533e+04	
1.450e+04												
9	151	4354.02	-1293.86	-1.54e-04	-45.61	0.0	-31.13	-59.64	23.77	-20.06	-3861.24	
4354.02												
		-4550.34	-3861.24	2.30e-03	0.0	54.0	-31.13	-82.45	23.77	-20.06	-2577.55	
517.60												
						108.0	-31.13	-105.25	23.77	-20.06	-1293.86	-
4550.34												
9	154	9049.38	-15.55	-5.95e-04	-45.61	0.0	-12.25	-146.57	64.76	-35.69	-7009.97	
9049.38												
		-9243.43	-7009.97	-0.04	0.0	54.0	-12.25	-169.38	64.76	-35.69	-3512.76	
518.73												
						108.0	-12.25	-192.18	64.76	-35.69	-15.55	-
9243.43												
9	158	1082.16	4806.70	4.99e-03	-45.61	0.0	58.14	0.93	42.36	-40.02	231.82	
1082.16												
		-1280.64	231.82	-0.05	0.0	54.0	58.14	-21.88	42.36	-40.02	2519.26	
516.52												
						108.0	58.14	-44.68	42.36	-40.02	4806.70	-
1280.64												
9	159	725.14	966.57	2.64e-03	-45.61	0.0	1.87	9.50	13.27	-22.09	-466.65	
619.39												
		-817.78	-466.65	-4.48e-03	0.0	54.0	1.87	-13.31	13.27	-22.09	249.96	
516.56												
						108.0	1.87	-36.11	13.27	-22.09	966.57	-
817.78												
9	162	5314.75	2244.88	2.02e-03	-45.61	0.0	20.75	-77.43	54.26	-37.72	-3615.38	
5314.75												
		-5510.87	-3615.38	-0.04	0.0	54.0	20.75	-100.24	54.26	-37.72	-685.25	
517.70												
						108.0	20.75	-123.04	54.26	-37.72	2244.88	-
5510.87												
10	16	-6430.89	1.283e+04	0.05	-274.51	0.0	-460.13	169.72	216.01	-0.29	-1.181e+04	-
3.266e+04												
		-3.266e+04	-2.194e+04	-0.15	-472.50	250.0	-460.13	32.46	-20.24	-0.29	1.266e+04	-
7387.56												
						500.0	-460.13	-104.79	-256.49	-0.29	-2.194e+04	-
1.643e+04												
10	24	-4158.34	2.281e+04	0.04	-274.51	0.0	-441.94	172.43	371.80	-0.88	-2.092e+04	-
3.123e+04												
		-3.123e+04	-3.190e+04	-0.21	-787.50	250.0	-441.94	35.17	-21.95	-0.88	2.281e+04	-
5284.25												
						500.0	-441.94	-102.09	-415.70	-0.88	-3.190e+04	-
1.365e+04												
10	26	1293.69	2.292e+04	0.02	-211.16	0.0	-280.02	142.14	373.94	-1.23	-2.134e+04	-
2.262e+04												
		-2.262e+04	-3.125e+04	-0.20	-787.50	250.0	-280.02	36.56	-19.81	-1.23	2.292e+04	-
277.83												
						500.0	-280.02	-69.02	-413.56	-1.23	-3.125e+04	-
4335.76												
10	49	-210.25	2.837e+04	7.61e-03	-211.16	0.0	-98.52	98.52	-440.95	2.75	2.572e+04	-
1.166e+04												
		-1.519e+04	-2.873e+04	0.17	892.50	250.0	-98.52	-7.07	5.30	2.75	-2.873e+04	-
224.82												
						500.0	-98.52	-112.65	451.55	2.75	2.837e+04	-
1.519e+04												
10	58	4309.79	4040.89	0.02	-211.16	0.0	-305.69	26.57	-22.15	-5.27	4040.89	
3473.98												
		-3.603e+04	-7077.17	-1.54	0.0	250.0	-305.69	-79.01	-22.15	-5.27	-1518.14	-
3081.17												
						500.0	-305.69	-184.59	-22.15	-5.27	-7077.17	-
3.603e+04												
10	59	1.125e+04	-128.06	0.04	-211.16	0.0	-208.16	215.63	4.11	6.56	-2226.85	-
4.377e+04												
		-4.377e+04	-2226.85	1.37	0.0	250.0	-208.16	110.05	4.11	6.56	-1177.45	-
3059.80												
						500.0	-208.16	4.47	4.11	6.56	-128.06	
1.125e+04												
10	68	2.082e+04	-378.60	0.04	-211.16	0.0	-239.89	253.91	-3.89	5.66	-378.60	-
5.334e+04												
		-5.334e+04	-2330.17	0.10	0.0	250.0	-239.89	148.32	-3.89	5.66	-1354.38	-
3060.80												
						500.0	-239.89	42.74	-3.89	5.66	-2330.17	
2.082e+04												
10	90	-562.78	2961.11	0.02	-211.16	0.0	-288.87	59.07	-17.64	-3.24	2961.11	-
4646.90												
		-2.790e+04	-5884.49	-1.04	0.0	250.0	-288.87	-46.51	-17.64	-3.24	-1461.69	-
3077.56												
						500.0	-288.87	-152.10	-17.64	-3.24	-5884.49	-
2.790e+04												
10	91	4053.85	-1147.07	0.03	-211.16	0.0	-224.97	183.13	-0.40	4.53	-1147.07	-
3.565e+04												
		-3.565e+04	-1320.75	0.87	0.0	250.0	-224.97	77.55	-0.40	4.53	-1233.91	-
3063.41												
						500.0	-224.97	-28.03	-0.40	4.53	-1320.75	
3126.82												
10	100	9417.70	61.95	0.03	-211.16	0.0	-245.74	208.30	-5.65	3.94	61.95	-
4.194e+04												
		-4.194e+04	-2766.21	0.04	0.0	250.0	-245.74	102.72	-5.65	3.94	-1352.13	-
3064.06												
						500.0	-245.74	-2.86	-5.65	3.94	-2766.21	
9417.70												

Viale Duca Alessandro n. 11 – 43123 Parma
Cell. 335 1403156 – E mail ing.concari@gmail.com
Sito web: studioaire.it – P.IVA 02561480340

10	126	-4437.51	8548.09	0.03	-211.16	0.0	-330.56	127.12	143.80	-0.04	-7834.35	-
2.354e+04												
		-2.354e+04	-1.469e+04	-0.10	-315.00	250.0	-330.56	21.54	-13.70	-0.04	8427.50	-
4958.73												
						500.0	-330.56	-84.05	-171.20	-0.04	-1.469e+04	-
1.277e+04												
10	128	412.56	1.526e+04	0.01	-211.16	0.0	-246.20	129.69	248.77	-0.45	-1.412e+04	-
1.949e+04												
		-1.949e+04	-2.099e+04	-0.13	-525.00	250.0	-246.20	24.11	-13.73	-0.45	1.526e+04	-
269.44												
						500.0	-246.20	-81.47	-276.23	-0.45	-2.099e+04	-
7439.81												
10	130	-2922.48	1.520e+04	0.03	-211.16	0.0	-318.44	128.93	247.66	-0.44	-1.391e+04	-
2.259e+04												
		-2.259e+04	-2.133e+04	-0.14	-525.00	250.0	-318.44	23.34	-14.84	-0.44	1.520e+04	-
3556.52												
						500.0	-318.44	-82.24	-277.34	-0.44	-2.133e+04	-
1.092e+04												
10	139	-234.10	1.876e+04	8.80e-03	-211.16	0.0	-125.20	100.61	-294.49	2.20	1.725e+04	-
1.219e+04												
		-1.468e+04	-1.918e+04	0.11	595.00	250.0	-125.20	-4.97	3.01	2.20	-1.918e+04	-
234.10												
						500.0	-125.20	-110.56	300.51	2.20	1.876e+04	-
1.468e+04												
10	146	-3264.74	938.13	0.03	-211.16	0.0	-267.24	120.99	-9.18	0.65	938.13	-
2.059e+04												
		-2.059e+04	-3651.00	-0.09	0.0	250.0	-267.24	15.41	-9.18	0.65	-1356.43	-
3540.07												
						500.0	-267.24	-90.17	-9.18	0.65	-3651.00	-
1.289e+04												
10	149	112.56	770.95	0.01	-211.16	0.0	-197.06	123.88	-8.88	0.57	770.95	-
1.803e+04												
		-1.803e+04	-3668.16	-0.09	0.0	250.0	-197.06	18.30	-8.88	0.57	-1448.60	-
253.02												
						500.0	-197.06	-87.28	-8.88	0.57	-3668.16	-
8876.44												
10	150	-2725.49	957.63	0.02	-211.16	0.0	-258.98	123.22	-9.83	0.59	957.63	-
2.068e+04												
		-2.068e+04	-3958.48	-0.10	0.0	250.0	-258.98	17.64	-9.83	0.59	-1500.42	-
3070.53												
						500.0	-258.98	-87.94	-9.83	0.59	-3958.48	-
1.186e+04												
10	154	-2771.93	2228.44	0.02	-211.16	0.0	-266.34	121.84	42.67	0.45	-2082.00	-
2.034e+04												
		-2.034e+04	-6995.20	-0.08	-105.00	250.0	-266.34	16.26	-9.83	0.45	2023.90	-
3073.76												
						500.0	-266.34	-89.33	-62.33	0.45	-6995.20	-
1.221e+04												
10	155	-248.94	3702.98	0.01	-211.16	0.0	-167.89	103.96	-60.15	1.32	3702.98	-
1.304e+04												
		-1.385e+04	-3896.23	-0.02	119.00	250.0	-167.89	-1.63	-0.65	1.32	-3896.23	-
248.94												
						500.0	-167.89	-107.21	58.85	1.32	3379.56	-
1.385e+04												
10	158	-2814.16	4294.57	0.02	-211.16	0.0	-246.25	120.26	-67.60	0.86	4294.57	-
1.994e+04												
		-1.994e+04	-5306.11	-0.10	119.00	250.0	-246.25	14.68	-8.10	0.86	-5169.06	-
3066.77												
						500.0	-246.25	-90.90	51.40	0.86	242.32	-
1.259e+04												
10	159	-252.65	315.43	0.01	-211.16	0.0	-178.56	104.79	-1.56	1.11	315.43	-
1.325e+04												
		-1.365e+04	-465.38	-0.01	0.0	250.0	-178.56	-0.79	-1.56	1.11	-74.97	-
252.65												
						500.0	-178.56	-106.37	-1.56	1.11	-465.38	-
1.365e+04												
10	160	46.33	720.34	0.01	-211.16	0.0	-195.01	121.76	-8.07	0.63	720.34	-
1.749e+04												
		-1.749e+04	-3312.29	-0.08	0.0	250.0	-195.01	16.18	-8.07	0.63	-1295.98	-
252.98												
						500.0	-195.01	-89.41	-8.07	0.63	-3312.29	-
9406.61												
10	162	-2791.73	907.02	0.02	-211.16	0.0	-256.92	121.10	-9.02	0.65	907.02	-
2.015e+04												
		-2.015e+04	-3602.62	-0.09	0.0	250.0	-256.92	15.52	-9.02	0.65	-1347.80	-
3070.49												
						500.0	-256.92	-90.06	-9.02	0.65	-3602.62	-
1.239e+04												
11	16	1.804e+05	3.967e+04	0.46	-2149.76	0.0	-186.94	-425.17	-31.17	4.46	3.967e+04	
1.804e+05												
		-1.946e+05	-5.672e+04	0.24	-708.75	125.0	-186.94	-1500.04	-385.55	4.46	1.363e+04	
6.008e+04												
						250.0	-186.94	-2574.92	-739.92	4.46	-5.672e+04	-
1.946e+05												
11	24	1.570e+05	6.613e+04	0.40	-1906.76	0.0	-237.54	-342.96	-51.93	7.67	6.613e+04	
1.570e+05												
		-1.671e+05	-9.451e+04	0.43	-1181.25	125.0	-237.54	-1296.34	-642.55	7.67	2.272e+04	
5.451e+04												
						250.0	-237.54	-2249.72	-1233.18	7.67	-9.451e+04	-
1.671e+05												
11	26	7.865e+04	6.613e+04	0.20	-1030.58	0.0	-206.28	-102.41	-51.93	7.53	6.613e+04	
7.865e+04												
		-7.577e+04	-9.451e+04	0.44	-1181.25	125.0	-206.28	-617.70	-642.56	7.53	2.272e+04	
3.365e+04												
						250.0	-206.28	-1132.99	-1233.18	7.53	-9.451e+04	-
7.577e+04												
11	35	1.804e+05	6.426e+04	0.45	-2149.76	0.0	39.21	-502.08	35.29	-4.56	-4.497e+04	
1.804e+05												

Viale Duca Alessandro n. 11 – 43123 Parma
Cell. 335 1403156 – E mail ing.concari@gmail.com
Sito web: studioaire.it – P.IVA 02561480340

		-2.139e+05	-4.497e+04	-0.34	803.25	125.0	39.21	-1576.96	436.91	-4.56	-1.546e+04	
5.044e+04												
						250.0	39.21	-2651.84	838.54	-4.56	6.426e+04	-
2.139e+05												
11	47	1.569e+05	1.071e+05	0.39	-1906.76	0.0	118.86	-424.12	58.81	-8.13	-7.496e+04	
1.569e+05												
		-1.874e+05	-7.496e+04	-0.55	1338.75	125.0	118.86	-1377.49	728.18	-8.13	-2.577e+04	
4.433e+04												
						250.0	118.86	-2330.87	1397.56	-8.13	1.071e+05	-
1.874e+05												
11	49	7.862e+04	1.071e+05	0.19	-1030.58	0.0	150.12	-183.56	58.80	-8.27	-7.496e+04	
7.862e+04												
		-9.609e+04	-7.496e+04	-0.54	1338.75	125.0	150.12	-698.85	728.18	-8.27	-2.578e+04	
2.347e+04												
						250.0	150.12	-1214.14	1397.55	-8.27	1.071e+05	-
9.609e+04												
11	57	1.105e+05	7527.88	0.27	-1354.58	0.0	-514.91	-516.96	-249.63	-8.94	7527.88	
1.105e+05												
		-1.887e+05	-2.810e+04	-0.13	0.0	125.0	-514.91	-1194.25	-249.63	-8.94	-1.029e+04	
3257.94												
						250.0	-514.91	-1871.54	-249.63	-8.94	-2.810e+04	-
1.887e+05												
11	60	1.093e+05	2.807e+04	0.28	-1354.58	0.0	408.46	22.44	249.58	9.10	-7543.51	
1.093e+05												
		-5.378e+04	-7543.51	0.08	0.0	125.0	408.46	-654.85	249.58	9.10	1.026e+04	
7.008e+04												
						250.0	408.46	-1332.14	249.58	9.10	2.807e+04	-
5.378e+04												
11	66	1.097e+05	1.208e+04	0.27	-1354.58	0.0	-415.14	-669.42	107.19	-15.97	-2.714e+04	
1.097e+05												
		-2.267e+05	-2.714e+04	-0.36	0.0	125.0	-415.14	-1346.71	107.19	-15.97	-7533.31	-
1.614e+04												
						250.0	-415.14	-2024.01	107.19	-15.97	1.208e+04	-
2.267e+05												
11	67	1.129e+05	2.713e+04	0.28	-1354.58	0.0	308.69	174.91	-107.24	16.12	2.713e+04	
1.101e+05												
		-1.579e+04	-1.210e+04	0.32	0.0	125.0	308.69	-502.38	-107.24	16.12	7511.96	
8.948e+04												
						250.0	308.69	-1179.67	-107.24	16.12	-1.210e+04	-
1.579e+04												
11	70	1.091e+05	6.721e+04	0.27	-1354.58	0.0	-48.83	-327.77	597.10	-13.51	-9.010e+04	
1.091e+05												
		-1.410e+05	-9.010e+04	-0.53	0.0	125.0	-48.83	-1005.06	597.10	-13.51	-1.144e+04	
2.637e+04												
						250.0	-48.83	-1682.36	597.10	-13.51	6.721e+04	-
1.410e+05												
11	71	1.107e+05	9.008e+04	0.28	-1354.58	0.0	-57.61	-166.74	-597.15	13.66	9.008e+04	
1.107e+05												
		-1.014e+05	-6.724e+04	0.48	0.0	125.0	-57.61	-844.03	-597.15	13.66	1.142e+04	
4.696e+04												
						250.0	-57.61	-1521.32	-597.15	13.66	-6.724e+04	-
1.014e+05												
11	89	1.103e+05	4948.53	0.27	-1354.58	0.0	-356.66	-424.65	-164.22	-5.86	4948.53	
1.103e+05												
		-1.656e+05	-1.849e+04	-0.10	0.0	125.0	-356.66	-1101.94	-164.22	-5.86	-6770.61	
1.468e+04												
						250.0	-356.66	-1779.23	-164.22	-5.86	-1.849e+04	-
1.656e+05												
11	92	1.095e+05	1.846e+04	0.28	-1354.58	0.0	250.21	-69.86	164.17	6.01	-4964.16	
1.095e+05												
		-7.687e+04	-4964.16	0.05	0.0	125.0	250.21	-747.16	164.17	6.01	6749.26	
5.865e+04												
						250.0	250.21	-1424.45	164.17	6.01	1.846e+04	-
7.687e+04												
11	98	1.098e+05	7937.28	0.27	-1354.58	0.0	-291.05	-524.93	70.49	-10.48	-1.786e+04	
1.098e+05												
		-1.906e+05	-1.786e+04	-0.25	0.0	125.0	-291.05	-1202.22	70.49	-10.48	-4960.62	
1937.98												
						250.0	-291.05	-1879.51	70.49	-10.48	7937.28	-
1.906e+05												
11	102	1.094e+05	4.421e+04	0.27	-1354.58	0.0	-50.27	-300.23	392.80	-8.86	-5.927e+04	
1.094e+05												
		-1.342e+05	-5.927e+04	-0.35	0.0	125.0	-50.27	-977.52	392.80	-8.86	-7531.84	
2.991e+04												
						250.0	-50.27	-1654.81	392.80	-8.86	4.421e+04	-
1.342e+05												
11	103	1.104e+05	5.926e+04	0.28	-1354.58	0.0	-56.18	-194.29	-392.85	9.01	5.926e+04	
1.104e+05												
		-1.082e+05	-4.424e+04	0.31	0.0	125.0	-56.18	-871.58	-392.85	9.01	7510.49	
4.343e+04												
						250.0	-56.18	-1548.87	-392.85	9.01	-4.424e+04	-
1.082e+05												
11	109	1.107e+05	4.323e+04	0.28	-1354.58	0.0	-231.61	-167.69	-353.16	15.77	4.323e+04	
1.107e+05												
		-1.014e+05	-3.977e+04	0.35	0.0	125.0	-231.61	-844.98	-353.16	15.77	1728.33	
4.694e+04												
						250.0	-231.61	-1522.27	-353.16	15.77	-3.977e+04	-
1.014e+05												
11	126	1.308e+05	2.645e+04	0.33	-1570.58	0.0	-127.68	-307.17	-20.78	3.07	2.645e+04	
1.308e+05												
		-1.424e+05	-3.781e+04	0.16	-472.50	125.0	-127.68	-1092.46	-257.03	3.07	9084.86	
4.328e+04												
						250.0	-127.68	-1877.75	-493.28	3.07	-3.781e+04	-
1.424e+05												
11	128	7.865e+04	4.408e+04	0.20	-1030.58	0.0	-145.14	-127.58	-34.62	5.26	4.408e+04	
7.865e+04												
		-8.207e+04	-6.301e+04	0.29	-787.50	125.0	-145.14	-642.87	-428.37	5.26	1.515e+04	
3.050e+04												

Viale Duca Alessandro n. 11 – 43123 Parma
Cell. 335 1403156 – E mail ing.concari@gmail.com
Sito web: studioaire.it – P.IVA 02561480340

						250.0	-145.14	-1158.16	-822.12	5.26	-6.301e+04	-
8.207e+04												
11	130	1.151e+05	4.409e+04	0.29	-1408.58	0.0	-161.41	-252.37	-34.62	5.21	4.409e+04	
1.151e+05												
		-1.240e+05	-6.301e+04	0.29	-787.50	125.0	-161.41	-956.66	-428.37	5.21	1.515e+04	
3.956e+04												
						250.0	-161.41	-1660.95	-822.12	5.21	-6.301e+04	-
1.240e+05												
11	135	1.307e+05	4.284e+04	0.33	-1570.58	0.0	23.09	-358.45	23.53	-2.94	-2.998e+04	
1.307e+05												
		-1.552e+05	-2.998e+04	-0.22	535.50	125.0	23.09	-1143.74	291.28	-2.94	-1.031e+04	
3.686e+04												
						250.0	23.09	-1929.03	559.03	-2.94	4.284e+04	-
1.552e+05												
11	139	7.863e+04	7.139e+04	0.20	-1030.58	0.0	92.45	-181.68	39.20	-5.27	-4.997e+04	
7.863e+04												
		-9.562e+04	-4.997e+04	-0.36	892.50	125.0	92.45	-696.98	485.45	-5.27	-1.718e+04	
2.371e+04												
						250.0	92.45	-1212.27	931.70	-5.27	7.139e+04	-
9.562e+04												
11	141	1.151e+05	7.139e+04	0.29	-1408.58	0.0	76.19	-306.47	39.20	-5.32	-4.997e+04	
1.151e+05												
		-1.376e+05	-4.997e+04	-0.37	892.50	125.0	76.19	-1010.76	485.45	-5.32	-1.718e+04	
3.278e+04												
						250.0	76.19	-1715.05	931.70	-5.32	7.139e+04	-
1.376e+05												
11	145	1.151e+05	5.78	0.29	-1408.58	0.0	-39.13	-302.72	7.52e-03	0.68	3.90	
1.151e+05												
		-1.366e+05	3.90	-6.93e-03	0.0	125.0	-39.13	-1007.01	7.52e-03	0.68	4.84	
3.326e+04												
						250.0	-39.13	-1711.30	7.52e-03	0.68	5.78	-
1.366e+05												
11	146	1.151e+05	-7.59	0.29	-1408.58	0.0	-55.55	-265.08	-0.02	0.07	-7.59	
1.151e+05												
		-1.272e+05	-13.23	-0.02	0.0	125.0	-55.55	-969.38	-0.02	0.07	-10.41	
3.796e+04												
						250.0	-55.55	-1673.67	-0.02	0.07	-13.23	-
1.272e+05												
11	152	7.864e+04	8810.16	0.20	-1030.58	0.0	-59.64	-139.64	-6.94	1.18	8810.16	
7.864e+04												
		-8.509e+04	-1.261e+04	0.04	-157.50	125.0	-59.64	-654.93	-85.69	1.18	3020.51	
2.898e+04												
						250.0	-59.64	-1170.22	-164.44	1.18	-1.261e+04	-
8.509e+04												
11	154	1.099e+05	8811.48	0.28	-1354.58	0.0	-73.58	-246.60	-6.94	1.13	8811.48	
1.099e+05												
		-1.211e+05	-1.261e+04	0.04	-157.50	125.0	-73.58	-923.89	-85.69	1.13	3022.09	
3.675e+04												
						250.0	-73.58	-1601.18	-164.44	1.13	-1.261e+04	-
1.211e+05												
11	155	7.864e+04	1.428e+04	0.20	-1030.58	0.0	0.20	-178.68	7.84	-0.47	-9992.83	
7.864e+04												
		-9.486e+04	-9992.83	-0.08	178.50	125.0	0.20	-693.97	97.09	-0.47	-3434.14	
2.409e+04												
						250.0	0.20	-1209.27	186.34	-0.47	1.428e+04	-
9.486e+04												
11	157	1.099e+05	1.428e+04	0.28	-1354.58	0.0	-13.74	-285.64	7.85	-0.51	-9991.51	
1.099e+05												
		-1.308e+05	-9991.51	-0.08	178.50	125.0	-13.74	-962.93	97.10	-0.51	-3432.56	
3.187e+04												
						250.0	-13.74	-1640.22	186.35	-0.51	1.428e+04	-
1.308e+05												
11	159	7.864e+04	3.62	0.20	-1030.58	0.0	-22.87	-177.93	5.02e-03	0.73	2.37	
7.864e+04												
		-9.467e+04	2.37	-3.88e-03	0.0	125.0	-22.87	-693.22	5.02e-03	0.73	3.00	
2.419e+04												
						250.0	-22.87	-1208.52	5.02e-03	0.73	3.62	-
9.467e+04												
11	160	7.864e+04	-9.13	0.20	-1030.58	0.0	-39.28	-140.30	-0.03	0.12	-9.13	
7.864e+04												
		-8.526e+04	-15.38	-0.02	0.0	125.0	-39.28	-655.59	-0.03	0.12	-12.26	
2.890e+04												
						250.0	-39.28	-1170.88	-0.03	0.12	-15.38	-
8.526e+04												
11	161	1.099e+05	5.47	0.28	-1354.58	0.0	-36.81	-284.89	7.16e-03	0.68	3.68	
1.099e+05												
		-1.306e+05	3.68	-6.49e-03	0.0	125.0	-36.81	-962.18	7.16e-03	0.68	4.58	
3.196e+04												
						250.0	-36.81	-1639.47	7.16e-03	0.68	5.47	-
1.306e+05												
11	162	1.099e+05	-7.81	0.28	-1354.58	0.0	-53.22	-247.26	-0.02	0.08	-7.81	
1.099e+05												
		-1.212e+05	-13.54	-0.02	0.0	125.0	-53.22	-924.55	-0.02	0.08	-10.67	
3.667e+04												
						250.0	-53.22	-1601.84	-0.02	0.08	-13.54	-
1.212e+05												
18	23	1.046e+05	6.840e+04	-0.02	-148.24	0.0	-183.45	-715.55	-323.39	-64.68	6.840e+04	
1.046e+05												
		-1.086e+05	-1.892e+04	-0.09	0.0	135.0	-183.45	-789.67	-323.39	-64.68	2.474e+04	
3011.58												
						270.0	-183.45	-863.79	-323.39	-64.68	-1.892e+04	-
1.086e+05												
18	26	1.096e+05	6.840e+04	-0.02	-114.03	0.0	-129.19	-766.43	-323.47	-31.64	6.840e+04	
1.096e+05												
		-1.127e+05	-1.894e+04	-0.10	0.0	135.0	-129.19	-823.45	-323.47	-31.64	2.473e+04	
2319.49												
						270.0	-129.19	-880.46	-323.47	-31.64	-1.894e+04	-
1.127e+05												

Viale Duca Alessandro n. 11 – 43123 Parma
Cell. 335 1403156 – E mail ing.concari@gmail.com
Sito web: studioaire.it – P.IVA 02561480340

18	47	1.215e+05	2.145e+04	0.02	-148.24	0.0	203.94	989.48	366.57	-69.44	-7.752e+04	-
1.256e+05												
		-1.256e+05	-7.752e+04	0.09	0.0	135.0	203.94	915.36	366.57	-69.44	-2.803e+04	
2969.96												
						270.0	203.94	841.24	366.57	-69.44	2.145e+04	
1.215e+05												
18	50	1.174e+05	2.143e+04	0.02	-114.03	0.0	258.21	938.59	366.48	-36.40	-7.752e+04	-
1.206e+05												
		-1.206e+05	-7.752e+04	0.08	0.0	135.0	258.21	881.58	366.48	-36.40	-2.804e+04	
2277.86												
						270.0	258.21	824.56	366.48	-36.40	2.143e+04	
1.174e+05												
18	51	1.219e+05	2.145e+04	0.02	-114.03	0.0	204.00	971.25	366.56	-59.31	-7.752e+04	-
1.250e+05												
		-1.250e+05	-7.752e+04	0.09	0.0	135.0	204.00	914.24	366.56	-59.31	-2.803e+04	
2279.43												
						270.0	204.00	857.22	366.56	-59.31	2.145e+04	
1.219e+05												
18	70	1.439e+05	1.479e+04	0.02	-114.03	0.0	153.37	1134.72	252.57	-63.29	-5.340e+04	-
1.470e+05												
		-1.470e+05	-5.340e+04	0.06	0.0	135.0	153.37	1077.71	252.57	-63.29	-1.931e+04	
2295.92												
						270.0	153.37	1020.69	252.57	-63.29	1.479e+04	
1.439e+05												
18	71	1.462e+05	5.340e+04	-0.02	-114.03	0.0	-99.50	-1037.65	-252.60	-30.66	5.340e+04	
1.462e+05												
		-1.493e+05	-1.480e+04	-0.08	0.0	135.0	-99.50	-1094.67	-252.60	-30.66	1.930e+04	
2305.45												
						270.0	-99.50	-1151.68	-252.60	-30.66	-1.480e+04	-
1.493e+05												
18	79	1.945e+05	4.370e+04	-0.03	-114.03	0.0	-124.01	-1395.46	-206.64	22.52	4.370e+04	
1.945e+05												
		-1.976e+05	-1.209e+04	0.48	0.0	135.0	-124.01	-1452.47	-206.64	22.52	1.581e+04	
2307.17												
						270.0	-124.01	-1509.49	-206.64	22.52	-1.209e+04	-
1.976e+05												
18	82	1.843e+05	1.172e+04	0.03	-114.03	0.0	178.51	1433.92	200.54	-108.99	-4.243e+04	-
1.874e+05												
		-1.874e+05	-4.243e+04	-0.53	0.0	135.0	178.51	1376.91	200.54	-108.99	-1.536e+04	
2294.59												
						270.0	178.51	1319.89	200.54	-108.99	1.172e+04	
1.843e+05												
18	83	1.866e+05	4.242e+04	-0.03	-114.03	0.0	-124.63	-1336.85	-200.57	15.03	4.242e+04	
1.866e+05												
		-1.897e+05	-1.173e+04	0.48	0.0	135.0	-124.63	-1393.87	-200.57	15.03	1.535e+04	
2306.78												
						270.0	-124.63	-1450.88	-200.57	15.03	-1.173e+04	-
1.897e+05												
18	102	9.375e+04	9728.44	0.01	-114.03	0.0	110.11	762.97	166.15	-57.70	-3.513e+04	-
9.685e+04												
		-9.685e+04	-3.513e+04	0.03	0.0	135.0	110.11	705.95	166.15	-57.70	-1.270e+04	
2297.56												
						270.0	110.11	648.94	166.15	-57.70	9728.44	
9.375e+04												
18	103	9.605e+04	3.513e+04	-0.02	-114.03	0.0	-56.24	-665.90	-166.18	-36.25	3.513e+04	
9.605e+04												
		-9.914e+04	-9739.36	-0.05	0.0	135.0	-56.24	-722.92	-166.18	-36.25	1.269e+04	
2303.82												
						270.0	-56.24	-779.93	-166.18	-36.25	-9739.36	-
9.914e+04												
18	111	1.278e+05	2.875e+04	-0.02	-114.03	0.0	-72.35	-901.24	-135.93	-1.27	2.875e+04	
1.278e+05												
		-1.309e+05	-7953.08	0.31	0.0	135.0	-72.35	-958.25	-135.93	-1.27	1.040e+04	
2304.95												
						270.0	-72.35	-1015.27	-135.93	-1.27	-7953.08	-
1.309e+05												
18	114	1.203e+05	7705.74	0.02	-114.03	0.0	126.63	959.76	131.91	-87.76	-2.791e+04	-
1.234e+05												
		-1.234e+05	-2.791e+04	-0.36	0.0	135.0	126.63	902.75	131.91	-87.76	-1.010e+04	
2296.68												
						270.0	126.63	845.73	131.91	-87.76	7705.74	
1.203e+05												
18	115	1.226e+05	2.791e+04	-0.02	-114.03	0.0	-72.75	-862.70	-131.94	-6.19	2.791e+04	
1.226e+05												
		-1.257e+05	-7716.66	0.31	0.0	135.0	-72.75	-919.71	-131.94	-6.19	1.010e+04	
2304.70												
						270.0	-72.75	-976.73	-131.94	-6.19	-7716.66	-
1.257e+05												
18	128	7.241e+04	4.560e+04	-0.01	-114.03	0.0	-86.18	-490.71	-215.64	-32.34	4.560e+04	
7.241e+04												
		-7.548e+04	-1.262e+04	-0.06	0.0	135.0	-86.18	-547.72	-215.64	-32.34	1.649e+04	
2313.57												
						270.0	-86.18	-604.74	-215.64	-32.34	-1.262e+04	-
7.548e+04												
18	129	6.947e+04	4.560e+04	-0.01	-114.03	0.0	-122.32	-468.93	-215.59	-47.62	4.560e+04	
6.947e+04												
		-7.254e+04	-1.261e+04	-0.06	0.0	135.0	-122.32	-525.95	-215.59	-47.62	1.649e+04	
2314.62												
						270.0	-122.32	-582.96	-215.59	-47.62	-1.261e+04	-
7.254e+04												
18	140	7.795e+04	1.429e+04	0.01	-114.03	0.0	172.08	645.98	244.33	-35.51	-5.168e+04	-
8.107e+04												
		-8.107e+04	-5.168e+04	0.05	0.0	135.0	172.08	588.96	244.33	-35.51	-1.869e+04	
2285.82												
						270.0	172.08	531.95	244.33	-35.51	1.429e+04	
7.795e+04												
18	141	8.089e+04	1.430e+04	0.01	-114.03	0.0	135.94	667.75	244.38	-50.79	-5.168e+04	-
8.401e+04												

Viale Duca Alessandro n. 11 – 43123 Parma
Cell. 335 1403156 – E mail ing.concari@gmail.com
Sito web: studioaire.it – P.IVA 02561480340

		-8.401e+04	-5.168e+04	0.06	0.0	135.0	135.94	610.74	244.38	-50.79	-1.869e+04	
2286.87												
						270.0	135.94	553.72	244.38	-50.79	1.430e+04	
8.089e+04												
18	152	1.435e+04	9119.18	-3.22e-03	-114.03	0.0	3.65	-60.72	-43.14	-33.51	9119.18	
1.435e+04												
		-1.744e+04	-2529.89	-0.02	0.0	135.0	3.65	-117.74	-43.14	-33.51	3294.65	
2303.40												
						270.0	3.65	-174.75	-43.14	-33.51	-2529.89	-
1.744e+04												
18	153	1.197e+04	9117.67	3.93e-03	-114.03	0.0	-25.32	-43.13	-43.10	-46.61	9117.67	
1.197e+04												
		-1.506e+04	-2519.88	-0.01	0.0	135.0	-25.32	-100.14	-43.10	-46.61	3298.90	
2304.23												
						270.0	-25.32	-157.16	-43.10	-46.61	-2519.88	-
1.506e+04												
18	156	1.325e+04	2852.97	3.49e-03	-114.03	0.0	55.31	166.61	48.85	-34.15	-1.034e+04	-
1.635e+04												
		-1.635e+04	-1.034e+04	-0.03	0.0	135.0	55.31	109.60	48.85	-34.15	-3741.67	
2297.85												
						270.0	55.31	52.58	48.85	-34.15	2852.97	
1.325e+04												
18	157	1.562e+04	2862.98	5.04e-03	-114.03	0.0	26.33	184.21	48.89	-47.25	-1.034e+04	-
1.872e+04												
		-1.872e+04	-1.034e+04	9.85e-03	0.0	135.0	26.33	127.20	48.89	-47.25	-3737.42	
2298.68												
						270.0	26.33	70.18	48.89	-47.25	2862.98	
1.562e+04												
18	160	2437.41	-0.58	2.54e-03	-114.03	0.0	27.86	45.84	-0.02	-33.81	-0.58	-
39.12												
		-3056.25	-6.67	-0.02	0.0	135.0	27.86	-11.17	-0.02	-33.81	-3.63	
2300.80												
						270.0	27.86	-68.19	-0.02	-33.81	-6.67	-
3056.25												
18	161	2349.89	3.34	4.09e-03	-114.03	0.0	-1.11	63.44	0.02	-46.91	-2.09	-
2413.98												
		-2413.98	-2.09	-7.13e-03	0.0	135.0	-1.11	6.42	0.02	-46.91	0.62	
2301.63												
						270.0	-1.11	-50.59	0.02	-46.91	3.34	-
679.73												
19	26	2.912e+04	5047.29	-0.02	-1455.58	0.0	109.21	988.47	95.87	14.17	-1.892e+04	-
5.477e+04												
		-5.477e+04	-1.892e+04	-0.02	0.0	125.0	109.21	260.68	95.87	14.17	-6936.65	
2.330e+04												
						250.0	109.21	-467.11	95.87	14.17	5047.29	
1.040e+04												
19	36	6.520e+04	1.284e+04	-0.04	-3917.26	0.0	-58.54	2223.29	-64.70	-14.34	1.284e+04	-
9.252e+04												
		-9.252e+04	-3334.70	-0.05	0.0	125.0	-58.54	264.66	-64.70	-14.34	4752.72	
6.297e+04												
						250.0	-58.54	-1693.97	-64.70	-14.34	-3334.70	-
2.636e+04												
19	47	5.317e+04	2.143e+04	-0.03	-3309.76	0.0	-114.73	1648.58	-108.33	-21.64	2.143e+04	-
4.947e+04												
		-5.105e+04	-5653.73	-0.03	0.0	125.0	-114.73	-6.30	-108.33	-21.64	7887.44	
5.317e+04												
						250.0	-114.73	-1661.18	-108.33	-21.64	-5653.73	-
5.105e+04												
19	68	1.454e+05	2354.69	-0.03	-2265.58	0.0	-24.52	2571.08	-22.24	-5.90	2354.69	-
2.142e+05												
		-2.142e+05	-1122.96	0.03	0.0	125.0	-24.52	1438.29	-22.24	-5.90	615.86	
3.637e+04												
						250.0	-24.52	305.50	-22.24	-5.90	-1122.96	
1.454e+05												
19	69	3.858e+04	3555.40	-0.03	-2265.58	0.0	78.77	921.01	67.92	5.99	-1.342e+04	-
7952.71												
		-6.090e+04	-1.342e+04	-0.16	0.0	125.0	78.77	-211.79	67.92	5.99	-4934.07	
3.637e+04												
						250.0	78.77	-1344.58	67.92	5.99	3555.40	-
6.090e+04												
19	70	3.813e+04	1.476e+04	-0.02	-2265.58	0.0	-58.18	949.73	-74.62	-22.68	1.476e+04	-
1.154e+04												
		-5.731e+04	-3890.88	-0.15	0.0	125.0	-58.18	-183.06	-74.62	-22.68	5436.20	
3.637e+04												
						250.0	-58.18	-1315.85	-74.62	-22.68	-3890.88	-
5.731e+04												
19	71	4.779e+04	3953.36	-0.03	-2265.58	0.0	66.33	1588.83	74.92	17.83	-1.478e+04	-
9.143e+04												
		-9.143e+04	-1.478e+04	0.10	0.0	125.0	66.33	456.04	74.92	17.83	-5412.00	
3.637e+04												
						250.0	66.33	-676.75	74.92	17.83	3953.36	
2.258e+04												
19	72	4.914e+04	1.341e+04	-0.02	-2265.58	0.0	-70.61	1617.55	-67.61	-10.84	1.341e+04	-
9.502e+04												
		-9.502e+04	-3492.92	0.11	0.0	125.0	-70.61	484.76	-67.61	-10.84	4958.27	
3.637e+04												
						250.0	-70.61	-648.03	-67.61	-10.84	-3492.92	
2.617e+04												
19	100	9.075e+04	1546.27	-0.03	-2265.58	0.0	-14.72	2125.51	-14.58	-4.71	1546.27	-
1.585e+05												
		-1.585e+05	-728.07	9.03e-03	0.0	125.0	-14.72	992.72	-14.58	-4.71	409.10	
3.637e+04												
						250.0	-14.72	-140.07	-14.58	-4.71	-728.07	
8.966e+04												
19	101	3.671e+04	2349.64	-0.03	-2265.58	0.0	53.21	1040.23	44.73	3.11	-8833.18	-
2.286e+04												
		-4.600e+04	-8833.18	-0.11	0.0	125.0	53.21	-92.56	44.73	3.11	-3241.77	
3.637e+04												

Viale Duca Alessandro n. 11 – 43123 Parma
Cell. 335 1403156 – E mail ing.concari@gmail.com
Sito web: studioaire.it – P.IVA 02561480340

						250.0	53.21	-1225.35	44.73	3.11	2349.64	-
4.600e+04												
19	102	3.642e+04	9709.71	-0.02	-2265.58	0.0	-36.88	1059.07	-49.03	-15.74	9709.71	-
2.521e+04												
		-4.364e+04	-2548.95	-0.11	0.0	125.0	-36.88	-73.72	-49.03	-15.74	3580.38	
3.637e+04												
						250.0	-36.88	-1206.51	-49.03	-15.74	-2548.95	-
4.364e+04												
19	103	4.278e+04	2611.43	-0.03	-2265.58	0.0	45.04	1479.49	49.34	10.90	-9723.79	-
7.776e+04												
		-7.776e+04	-9723.79	0.06	0.0	125.0	45.04	346.69	49.34	10.90	-3556.18	
3.637e+04												
						250.0	45.04	-786.10	49.34	10.90	2611.43	
8911.14												
19	104	4.355e+04	8819.10	-0.02	-2265.58	0.0	-45.06	1498.32	-44.43	-7.96	8819.10	-
8.012e+04												
		-8.012e+04	-2287.16	0.06	0.0	125.0	-45.06	365.53	-44.43	-7.96	3265.97	
3.637e+04												
						250.0	-45.06	-767.26	-44.43	-7.96	-2287.16	
1.127e+04												
19	128	2.581e+04	3365.10	-0.02	-1455.58	0.0	72.37	898.93	63.91	8.72	-1.261e+04	-
4.358e+04												
		-4.358e+04	-1.261e+04	-0.02	0.0	125.0	72.37	171.14	63.91	8.72	-4623.91	
2.330e+04												
						250.0	72.37	-556.65	63.91	8.72	3365.10	-
792.14												
19	136	4.646e+04	8560.42	-0.03	-2805.58	0.0	-39.20	1578.17	-43.13	-9.84	8560.42	-
6.451e+04												
		-6.451e+04	-2223.04	-0.04	0.0	125.0	-39.20	175.38	-43.13	-9.84	3168.69	
4.509e+04												
						250.0	-39.20	-1227.41	-43.13	-9.84	-2223.04	-
2.066e+04												
19	141	3.856e+04	1.429e+04	-0.03	-2400.58	0.0	-76.66	1195.03	-72.22	-14.71	1.429e+04	-
3.580e+04												
		-3.712e+04	-3769.06	-0.02	0.0	125.0	-76.66	-5.26	-72.22	-14.71	5258.50	
3.856e+04												
						250.0	-76.66	-1205.55	-72.22	-14.71	-3769.06	-
3.712e+04												
19	146	3.950e+04	31.27	-0.03	-2400.58	0.0	3.73	1336.09	0.15	-2.53	-6.82	-
5.344e+04												
		-5.344e+04	-6.82	-0.02	0.0	125.0	3.73	135.80	0.15	-2.53	12.23	
3.855e+04												
						250.0	3.73	-1064.49	0.15	-2.53	31.27	-
1.949e+04												
19	150	3.769e+04	35.03	-0.02	-2265.58	0.0	5.01	1287.85	0.17	-2.38	-8.39	-
5.381e+04												
		-5.381e+04	-8.39	-0.03	0.0	125.0	5.01	155.06	0.17	-2.38	13.32	
3.637e+04												
						250.0	5.01	-977.73	0.17	-2.38	35.03	-
1.504e+04												
19	152	2.482e+04	696.35	-0.02	-1455.58	0.0	19.01	867.09	12.90	0.29	-2528.75	-
3.959e+04												
		-3.959e+04	-2528.75	-0.02	0.0	125.0	19.01	139.30	12.90	0.29	-916.20	
2.331e+04												
						250.0	19.01	-588.49	12.90	0.29	696.35	-
4768.37												
19	157	3.637e+04	2860.16	-0.02	-2265.58	0.0	-17.96	1122.21	-14.45	-5.15	2860.16	-
3.310e+04												
		-3.575e+04	-753.11	-8.60e-03	0.0	125.0	-17.96	-10.58	-14.45	-5.15	1053.53	
3.637e+04												
						250.0	-17.96	-1143.37	-14.45	-5.15	-753.11	-
3.575e+04												
19	160	2.486e+04	31.06	-0.02	-1455.58	0.0	6.14	868.42	0.16	-1.80	-8.38	-
3.976e+04												
		-3.976e+04	-8.38	-0.02	0.0	125.0	6.14	140.62	0.16	-1.80	11.34	
2.331e+04												
						250.0	6.14	-587.17	0.16	-1.80	31.06	-
4601.59												
19	161	3.637e+04	3.74	-0.02	-2265.58	0.0	-3.37	1120.71	-0.01	-2.78	3.74	-
3.292e+04												
		-3.594e+04	0.89	-6.55e-03	0.0	125.0	-3.37	-12.08	-0.01	-2.78	2.32	
3.637e+04												
						250.0	-3.37	-1144.87	-0.01	-2.78	0.89	-
3.594e+04												
19	162	3.740e+04	31.24	-0.02	-2265.58	0.0	4.08	1269.28	0.15	-2.42	-7.04	-
5.149e+04												
		-5.149e+04	-7.04	-0.02	0.0	125.0	4.08	136.49	0.15	-2.42	12.10	
3.637e+04												
						250.0	4.08	-996.30	0.15	-2.42	31.24	-
1.736e+04												
20	24	1.094e+05	-3613.96	-0.01	-88.94	0.0	-182.61	-1312.86	-8.63	-48.33	-3613.96	
1.094e+05												
		-1.105e+05	-5011.44	-0.02	0.0	81.0	-182.61	-1357.33	-8.63	-48.33	-4312.70	
1236.15												
						162.0	-182.61	-1401.80	-8.63	-48.33	-5011.44	-
1.105e+05												
20	26	1.104e+05	-3615.02	-8.63e-03	-68.42	0.0	-188.24	-1334.21	-8.62	-22.55	-3615.02	
1.104e+05												
		-1.113e+05	-5010.89	-0.02	0.0	81.0	-188.24	-1368.42	-8.62	-22.55	-4312.95	
950.84												
						162.0	-188.24	-1402.63	-8.62	-22.55	-5010.89	-
1.113e+05												
20	47	1.186e+05	5632.21	7.94e-03	-88.94	0.0	171.41	1515.93	9.07	-41.81	4162.56	-
1.197e+05												
		-1.197e+05	4162.56	-0.02	0.0	81.0	171.41	1471.46	9.07	-41.81	4897.38	
1240.85												
						162.0	171.41	1426.99	9.07	-41.81	5632.21	
1.186e+05												

Viale Duca Alessandro n. 11 – 43123 Parma
Cell. 335 1403156 – E mail ing.concari@gmail.com
Sito web: studioaire.it – P.IVA 02561480340

20	49	1.179e+05	5632.76	9.33e-03	-68.42	0.0	165.79	1494.58	9.08	-16.03	4161.50	-
1.187e+05												
		-1.187e+05	4161.50	-0.01	0.0	81.0	165.79	1460.37	9.08	-16.03	4897.13	
955.53												
						162.0	165.79	1426.16	9.08	-16.03	5632.76	
1.179e+05												
20	57	2.761e+04	-286.19	-0.01	-68.42	0.0	34.50	-312.11	0.06	-56.36	-1039.87	
2.761e+04												
		-2.850e+04	-1039.87	0.18	0.0	81.0	34.50	-346.32	0.06	-56.36	-663.03	
940.09												
						162.0	34.50	-380.53	0.06	-56.36	-286.19	-
2.850e+04												
20	60	2.145e+04	1101.21	0.01	-68.42	0.0	-74.24	304.23	-0.71	-5.17	1101.21	-
2.229e+04												
		-2.229e+04	242.32	-0.21	0.0	81.0	-74.24	270.02	-0.71	-5.17	671.77	
965.82												
						162.0	-74.24	235.82	-0.71	-5.17	242.32	
2.145e+04												
20	70	1.471e+05	3877.10	9.95e-03	-68.42	0.0	-18.27	1855.86	6.08	-38.21	2668.82	-
1.480e+05												
		-1.480e+05	2668.82	0.01	0.0	81.0	-18.27	1821.65	6.08	-38.21	3272.96	
954.98												
						162.0	-18.27	1787.44	6.08	-38.21	3877.10	
1.471e+05												
20	71	1.533e+05	-2607.48	-0.01	-68.42	0.0	-21.48	-1863.74	-6.73	-23.31	-2607.48	
1.533e+05												
		-1.542e+05	-3920.96	-0.04	0.0	81.0	-21.48	-1897.95	-6.73	-23.31	-3264.22	
950.93												
						162.0	-21.48	-1932.16	-6.73	-23.31	-3920.96	-
1.542e+05												
20	89	1.907e+04	-195.74	-8.69e-03	-68.42	0.0	15.84	-206.66	-0.07	-47.60	-673.58	
1.907e+04												
		-1.995e+04	-673.58	0.11	0.0	81.0	15.84	-240.87	-0.07	-47.60	-434.66	
944.49												
						162.0	15.84	-275.08	-0.07	-47.60	-195.74	-
1.995e+04												
20	92	1.291e+04	734.92	6.74e-03	-68.42	0.0	-55.59	198.78	-0.58	-13.93	734.92	-
1.375e+04												
		-1.375e+04	151.88	-0.14	0.0	81.0	-55.59	164.57	-0.58	-13.93	443.40	
961.43												
						162.0	-55.59	130.36	-0.58	-13.93	151.88	
1.291e+04												
20	102	9.556e+04	2543.07	6.33e-03	-68.42	0.0	-18.72	1219.34	3.89	-35.66	1766.19	-
9.643e+04												
		-9.643e+04	1766.19	3.52e-03	0.0	81.0	-18.72	1185.13	3.89	-35.66	2154.63	
954.29												
						162.0	-18.72	1150.93	3.89	-35.66	2543.07	
9.556e+04												
20	103	1.017e+05	-1704.85	-7.81e-03	-68.42	0.0	-21.02	-1227.22	-4.54	-25.86	-1704.85	
1.017e+05												
		-1.026e+05	-2586.93	-0.03	0.0	81.0	-21.02	-1261.43	-4.54	-25.86	-2145.89	
951.63												
						162.0	-21.02	-1295.64	-4.54	-25.86	-2586.93	-
1.026e+05												
20	128	7.317e+04	-2409.48	-6.17e-03	-68.42	0.0	-124.14	-874.47	-5.75	-21.76	-2409.48	
7.317e+04												
		-7.404e+04	-3340.87	-0.01	0.0	81.0	-124.14	-908.68	-5.75	-21.76	-2875.18	
951.07												
						162.0	-124.14	-942.89	-5.75	-21.76	-3340.87	-
7.404e+04												
20	130	7.274e+04	-2409.09	-7.07e-03	-68.42	0.0	-121.20	-869.24	-5.75	-34.91	-2409.09	
7.274e+04												
		-7.361e+04	-3341.07	-0.01	0.0	81.0	-121.20	-903.45	-5.75	-34.91	-2875.08	
950.97												
						162.0	-121.20	-937.65	-5.75	-34.91	-3341.07	-
7.361e+04												
20	139	7.872e+04	3754.89	5.80e-03	-68.42	0.0	111.88	1011.39	6.05	-17.41	2774.86	-
7.958e+04												
		-7.958e+04	2774.86	-9.67e-03	0.0	81.0	111.88	977.18	6.05	-17.41	3264.88	
954.20												
						162.0	111.88	942.97	6.05	-17.41	3754.89	
7.872e+04												
20	141	7.914e+04	3754.70	5.23e-03	-68.42	0.0	114.81	1016.63	6.05	-30.56	2775.25	-
8.001e+04												
		-8.001e+04	2775.25	-0.01	0.0	81.0	114.81	982.42	6.05	-30.56	3264.97	
954.10												
						162.0	114.81	948.21	6.05	-30.56	3754.70	
7.914e+04												
20	152	1.683e+04	-459.06	-1.49e-03	-68.42	0.0	-41.42	-178.96	-1.39	-19.98	-459.06	
1.683e+04												
		-1.770e+04	-684.54	-0.01	0.0	81.0	-41.42	-213.17	-1.39	-19.98	-571.80	
952.57												
						162.0	-41.42	-247.38	-1.39	-19.98	-684.54	-
1.770e+04												
20	154	1.647e+04	-458.73	-2.22e-03	-68.42	0.0	-38.90	-174.48	-1.39	-31.25	-458.73	
1.647e+04												
		-1.734e+04	-684.71	-0.01	0.0	81.0	-38.90	-208.69	-1.39	-31.25	-571.72	
952.49												
						162.0	-38.90	-242.89	-1.39	-31.25	-684.71	-
1.734e+04												
20	155	1.610e+04	750.31	-9.63e-04	-68.42	0.0	25.62	238.29	1.20	-19.63	556.25	-
1.696e+04												
		-1.696e+04	556.25	-3.81e-03	0.0	81.0	25.62	204.09	1.20	-19.63	653.28	
952.08												
						162.0	25.62	169.88	1.20	-19.63	750.31	
1.610e+04												
20	157	1.646e+04	750.14	-1.56e-03	-68.42	0.0	28.14	242.78	1.19	-30.90	556.58	-
1.733e+04												

Viale Duca Alessandro n. 11 – 43123 Parma
Cell. 335 1403156 – E mail ing.concari@gmail.com
Sito web: studioaire.it – P.IVA 02561480340

		-1.733e+04	556.58	-5.52e-03	0.0	81.0	28.14	208.57	1.19	-30.90	653.36	
951.99												
						162.0	28.14	174.36	1.19	-30.90	750.14	
1.646e+04												
20	160	3021.02	30.34	-4.69e-04	-68.42	0.0	-22.39	-8.43	-0.32	-19.49	30.34	
3021.02												
		-3885.84	-21.76	-0.01	0.0	81.0	-22.39	-42.63	-0.32	-19.49	4.29	
953.04												
						162.0	-22.39	-76.84	-0.32	-19.49	-21.76	-
3885.84												
20	161	1224.61	1.93	-2.02e-03	-68.42	0.0	6.58	49.51	-0.02	-31.45	1.93	-
1673.03												
		-1673.03	-1.00	-4.23e-03	0.0	81.0	6.58	15.30	-0.02	-31.45	0.46	
951.46												
						162.0	6.58	-18.91	-0.02	-31.45	-1.00	
805.04												
20	162	2657.62	30.67	-9.74e-04	-68.42	0.0	-19.87	-3.94	-0.32	-30.76	30.67	
2657.62												
		-3522.61	-21.93	-0.02	0.0	81.0	-19.87	-38.15	-0.32	-30.76	4.37	
952.96												
						162.0	-19.87	-72.36	-0.32	-30.76	-21.93	-
3522.61												
21	16	3.173e+04	2154.35	-0.02	-1649.26	0.0	-8.98	1092.86	-45.37	1.29	2154.35	-
5.866e+04												
		-5.866e+04	-9188.56	-0.04	0.0	125.0	-8.98	268.23	-45.37	1.29	-3517.10	
2.641e+04												
						250.0	-8.98	-556.40	-45.37	1.29	-9188.56	
8396.10												
21	25	1.023e+04	3704.03	-0.01	-645.58	0.0	293.14	314.27	-75.93	2.34	3704.03	-
8878.48												
		-1.101e+04	-1.528e+04	0.02	0.0	125.0	293.14	-8.52	-75.93	2.34	-5787.80	
1.023e+04												
						250.0	293.14	-331.32	-75.93	2.34	-1.528e+04	-
1.101e+04												
21	26	2.707e+04	3639.12	-0.02	-645.58	0.0	132.21	617.74	-75.81	-0.61	3639.12	-
4.679e+04												
		-4.679e+04	-1.531e+04	-0.02	0.0	125.0	132.21	294.95	-75.81	-0.61	-5837.38	
1.025e+04												
						250.0	132.21	-27.84	-75.81	-0.61	-1.531e+04	
2.695e+04												
21	47	2.249e+04	1.734e+04	0.01	-1406.26	0.0	-367.21	665.37	86.18	3.51	-4204.53	-
1.674e+04												
		-2.618e+04	-4204.53	-0.04	0.0	125.0	-367.21	-37.76	86.18	3.51	6567.67	
2.249e+04												
						250.0	-367.21	-740.89	86.18	3.51	1.734e+04	-
2.618e+04												
21	48	2.879e+04	1.731e+04	0.02	-1406.26	0.0	-528.14	968.84	86.30	0.57	-4269.44	-
5.465e+04												
		-5.465e+04	-4269.44	-0.06	0.0	125.0	-528.14	265.71	86.30	0.57	6518.09	
2.251e+04												
						250.0	-528.14	-437.42	86.30	0.57	1.731e+04	
1.178e+04												
21	67	1.470e+05	863.60	-0.02	-969.58	0.0	34.59	1779.23	-17.83	14.54	863.60	-
1.766e+05												
		-1.766e+05	-2008.73	0.24	0.0	125.0	34.59	1294.44	-17.83	14.54	-572.57	
1.550e+04												
						250.0	34.59	809.65	-17.83	14.54	-2008.73	
1.470e+05												
21	69	1.720e+04	2834.34	-0.02	-969.58	0.0	100.94	369.29	-59.08	-1.37	2834.34	-
381.64												
		-2.926e+04	-1.194e+04	-0.14	0.0	125.0	100.94	-115.50	-59.08	-1.37	-4551.19	
1.548e+04												
						250.0	100.94	-600.29	-59.08	-1.37	-1.194e+04	-
2.926e+04												
21	72	3.556e+04	1.192e+04	0.02	-969.58	0.0	-305.26	880.38	59.32	3.59	-2909.38	-
6.425e+04												
		-6.425e+04	-2909.38	0.09	0.0	125.0	-305.26	395.59	59.32	3.59	4505.80	
1.549e+04												
						250.0	-305.26	-89.20	59.32	3.59	1.192e+04	
3.464e+04												
21	82	3.839e+04	9069.71	-0.01	-969.58	0.0	-356.86	63.19	48.04	-21.58	-2464.95	
3.787e+04												
		-6.753e+04	-2464.95	-0.41	0.0	125.0	-356.86	-421.60	48.04	-21.58	3302.38	
1.547e+04												
						250.0	-356.86	-906.39	48.04	-21.58	9069.71	-
6.753e+04												
21	83	7.291e+04	2389.91	-0.02	-969.58	0.0	152.54	1186.48	-47.80	23.80	2389.91	-
1.025e+05												
		-1.025e+05	-9085.44	0.36	0.0	125.0	152.54	701.69	-47.80	23.80	-3347.77	
1.550e+04												
						250.0	152.54	216.90	-47.80	23.80	-9085.44	
7.291e+04												
21	99	9.761e+04	555.29	-0.02	-969.58	0.0	-12.26	1384.11	-11.69	9.94	555.29	-
1.272e+05												
		-1.272e+05	-1323.82	0.15	0.0	125.0	-12.26	899.32	-11.69	9.94	-384.26	
1.550e+04												
						250.0	-12.26	414.53	-11.69	9.94	-1323.82	
9.761e+04												
21	101	1.548e+04	1851.75	-0.02	-969.58	0.0	31.46	456.75	-38.83	-0.53	1851.75	-
1.131e+04												
		-1.832e+04	-7855.34	-0.10	0.0	125.0	31.46	-28.04	-38.83	-0.53	-3001.79	
1.548e+04												
						250.0	31.46	-512.83	-38.83	-0.53	-7855.34	-
1.832e+04												
21	104	2.773e+04	7839.61	0.01	-969.58	0.0	-235.78	792.92	39.06	2.75	-1926.79	-
5.332e+04												
		-5.332e+04	-1926.79	0.05	0.0	125.0	-235.78	308.13	39.06	2.75	2956.41	
1.549e+04												

Viale Duca Alessandro n. 11 – 43123 Parma
Cell. 335 1403156 – E mail ing.concari@gmail.com
Sito web: studioaire.it – P.IVA 02561480340

						250.0	-235.78	-176.67	39.06	2.75	7839.61	
2.371e+04												
21	114	2.224e+04	5963.36	-9.43e-03	-969.58	0.0	-269.68	255.43	31.64	-13.81	-1634.31	
1.385e+04												
		-4.349e+04	-1634.31	-0.28	0.0	125.0	-269.68	-229.37	31.64	-13.81	2164.53	
1.548e+04												
						250.0	-269.68	-714.16	31.64	-13.81	5963.36	-
4.349e+04												
21	115	4.888e+04	1559.27	-0.02	-969.58	0.0	65.37	994.25	-31.40	16.03	1559.27	-
7.848e+04												
		-7.848e+04	-5979.09	0.23	0.0	125.0	65.37	509.45	-31.40	16.03	-2209.91	
1.550e+04												
						250.0	65.37	24.66	-31.40	16.03	-5979.09	
4.888e+04												
21	126	2.219e+04	1435.93	-0.02	-1185.58	0.0	-7.24	769.80	-30.24	1.14	1435.93	-
4.021e+04												
		-4.021e+04	-6124.78	-0.03	0.0	125.0	-7.24	177.01	-30.24	1.14	-2344.42	
1.897e+04												
						250.0	-7.24	-415.78	-30.24	1.14	-6124.78	
4047.67												
21	127	1.024e+04	2468.59	-0.01	-645.58	0.0	192.30	312.59	-50.61	2.27	2468.59	-
8664.17												
		-1.121e+04	-1.018e+04	0.01	0.0	125.0	192.30	-10.20	-50.61	2.27	-3857.75	
1.024e+04												
						250.0	192.30	-332.99	-50.61	2.27	-1.018e+04	-
1.121e+04												
21	128	1.738e+04	2425.32	-0.01	-645.58	0.0	85.01	514.91	-50.53	0.31	2425.32	-
3.394e+04												
		-3.394e+04	-1.021e+04	-0.02	0.0	125.0	85.01	192.12	-50.53	0.31	-3890.80	
1.025e+04												
						250.0	85.01	-130.68	-50.53	0.31	-1.021e+04	
1.409e+04												
21	141	1.636e+04	1.156e+04	9.43e-03	-1023.58	0.0	-246.06	484.81	57.46	2.63	-2803.33	-
1.226e+04												
		-1.900e+04	-2803.33	-0.02	0.0	125.0	-246.06	-26.98	57.46	2.63	4378.76	
1.636e+04												
						250.0	-246.06	-538.77	57.46	2.63	1.156e+04	-
1.900e+04												
21	142	2.009e+04	1.154e+04	0.01	-1023.58	0.0	-353.34	687.13	57.54	0.67	-2846.60	-
3.753e+04												
		-3.753e+04	-2846.60	-0.04	0.0	125.0	-353.34	175.33	57.54	0.67	4345.71	
1.637e+04												
						250.0	-353.34	-336.46	57.54	0.67	1.154e+04	
6303.02												
21	150	1.874e+04	-10.15	-0.01	-969.58	0.0	-112.89	645.07	0.13	0.91	-41.85	-
3.484e+04												
		-3.484e+04	-41.85	-0.03	0.0	125.0	-112.89	160.28	0.13	0.91	-26.00	
1.549e+04												
						250.0	-112.89	-324.52	0.13	0.91	-10.15	
5223.92												
21	151	1.024e+04	491.90	-7.75e-03	-645.58	0.0	30.95	309.91	-10.09	2.18	491.90	-
8321.28												
		-1.154e+04	-2031.24	-2.10e-03	0.0	125.0	30.95	-12.88	-10.09	2.18	-769.67	
1.024e+04												
						250.0	30.95	-335.67	-10.09	2.18	-2031.24	-
1.154e+04												
21	152	1.452e+04	457.28	-8.46e-03	-645.58	0.0	-54.87	471.76	-10.03	0.61	457.28	-
2.854e+04												
		-2.854e+04	-2049.51	-0.02	0.0	125.0	-54.87	148.97	-10.03	0.61	-796.12	
1.026e+04												
						250.0	-54.87	-173.82	-10.03	0.61	-2049.51	
8703.39												
21	157	1.548e+04	2320.38	-9.51e-03	-969.58	0.0	-62.04	462.22	11.53	2.65	-562.97	-
1.200e+04												
		-1.764e+04	-562.97	-9.00e-03	0.0	125.0	-62.04	-22.57	11.53	2.65	878.71	
1.548e+04												
						250.0	-62.04	-507.36	11.53	2.65	2320.38	-
1.764e+04												
21	158	1.795e+04	2302.11	-9.55e-03	-969.58	0.0	-147.87	624.08	11.60	1.08	-597.58	-
3.222e+04												
		-3.222e+04	-597.58	-0.03	0.0	125.0	-147.87	139.28	11.60	1.08	852.26	
1.549e+04												
						250.0	-147.87	-345.51	11.60	1.08	2302.11	
2600.66												
21	159	1.025e+04	6.97	-6.90e-03	-645.58	0.0	-9.38	309.24	0.04	2.15	-2.28	-
8235.56												
		-1.162e+04	-2.28	-3.90e-03	0.0	125.0	-9.38	-13.55	0.04	2.15	2.35	
1.025e+04												
						250.0	-9.38	-336.34	0.04	2.15	6.97	-
1.162e+04												
21	161	1.547e+04	10.41	-0.01	-969.58	0.0	-16.33	462.98	0.05	2.68	-2.90	-
1.210e+04												
		-1.755e+04	-2.90	-6.52e-03	0.0	125.0	-16.33	-21.81	0.05	2.68	3.75	
1.547e+04												
						250.0	-16.33	-506.60	0.05	2.68	10.41	-
1.755e+04												
21	162	1.797e+04	-7.86	-0.01	-969.58	0.0	-102.16	624.84	0.12	1.11	-37.52	-
3.232e+04												
		-3.232e+04	-37.52	-0.02	0.0	125.0	-102.16	140.04	0.12	1.11	-22.69	
1.549e+04												
						250.0	-102.16	-344.75	0.12	1.11	-7.86	
2693.34												
22	24	1.355e+05	1.532e+04	-0.01	-59.30	0.0	-67.36	-2483.11	1016.17	159.66	-9.442e+04	
1.355e+05												
		-1.359e+05	-9.442e+04	0.02	0.0	54.0	-67.36	-2512.76	1016.17	159.66	-3.955e+04	
615.56												
						108.0	-67.36	-2542.40	1016.17	159.66	1.532e+04	-
1.359e+05												

Viale Duca Alessandro n. 11 – 43123 Parma
Cell. 335 1403156 – E mail ing.concari@gmail.com
Sito web: studioaire.it – P.IVA 02561480340

22	25	1.154e+05	1.532e+04	-0.01	-45.61	0.0	-128.24	-2116.23	1015.93	88.80	-9.441e+04	
1.154e+05												
		-1.156e+05	-9.441e+04	0.02	0.0	54.0	-128.24	-2139.03	1015.93	88.80	-3.954e+04	
477.72												
						108.0	-128.24	-2161.84	1015.93	88.80	1.532e+04	-
1.156e+05												
22	26	1.337e+05	1.533e+04	-0.02	-45.61	0.0	-69.28	-2455.40	1016.30	86.44	-9.443e+04	
1.337e+05												
		-1.340e+05	-9.443e+04	0.02	0.0	54.0	-69.28	-2478.21	1016.30	86.44	-3.955e+04	
476.63												
						108.0	-69.28	-2501.01	1016.30	86.44	1.533e+04	-
1.340e+05												
22	47	1.254e+05	1.070e+05	0.02	-59.30	0.0	150.53	2355.47	-1151.74	137.85	1.070e+05	-
1.258e+05												
		-1.258e+05	-1.738e+04	-0.03	0.0	54.0	150.53	2325.82	-1151.74	137.85	4.481e+04	
588.25												
						108.0	150.53	2296.18	-1151.74	137.85	-1.738e+04	
1.254e+05												
22	48	1.071e+05	1.070e+05	0.02	-59.30	0.0	209.49	2016.30	-1151.37	135.49	1.070e+05	-
1.075e+05												
		-1.075e+05	-1.736e+04	-0.04	0.0	54.0	209.49	1986.65	-1151.37	135.49	4.481e+04	
587.15												
						108.0	209.49	1957.00	-1151.37	135.49	-1.736e+04	
1.071e+05												
22	69	1.906e+05	1.196e+04	-0.02	-45.61	0.0	-18.74	-3509.67	793.27	90.78	-7.371e+04	
1.906e+05												
		-1.909e+05	-7.371e+04	0.02	0.0	54.0	-18.74	-3532.47	793.27	90.78	-3.088e+04	
463.89												
						108.0	-18.74	-3555.28	793.27	90.78	1.196e+04	-
1.909e+05												
22	72	1.663e+05	7.370e+04	0.02	-45.61	0.0	86.37	3104.40	-793.19	118.76	7.370e+04	-
1.666e+05												
		-1.666e+05	-1.196e+04	-0.04	0.0	54.0	86.37	3081.59	-793.19	118.76	3.087e+04	
463.31												
						108.0	86.37	3058.79	-793.19	118.76	-1.196e+04	
1.663e+05												
22	82	7.111e+04	5.552e+04	0.01	-45.61	0.0	107.88	1342.43	-597.89	22.53	5.552e+04	-
7.141e+04												
		-7.141e+04	-9047.37	-0.21	0.0	54.0	107.88	1319.63	-597.89	22.53	2.324e+04	
461.64												
						108.0	107.88	1296.82	-597.89	22.53	-9047.37	
7.111e+04												
22	83	9.546e+04	9044.53	-0.01	-45.61	0.0	-40.26	-1747.70	597.97	187.01	-5.554e+04	
9.546e+04												
		-9.576e+04	-5.554e+04	0.19	0.0	54.0	-40.26	-1770.51	597.97	187.01	-2.325e+04	
465.56												
						108.0	-40.26	-1793.31	597.97	187.01	9044.53	-
9.576e+04												
22	101	1.295e+05	7866.72	-0.01	-45.61	0.0	-0.77	-2377.82	521.87	95.55	-4.850e+04	
1.295e+05												
		-1.298e+05	-4.850e+04	0.01	0.0	54.0	-0.77	-2400.63	521.87	95.55	-2.031e+04	
463.79												
						108.0	-0.77	-2423.43	521.87	95.55	7866.72	-
1.298e+05												
22	104	1.051e+05	4.848e+04	0.02	-45.61	0.0	68.39	1972.55	-521.79	113.99	4.848e+04	-
1.054e+05												
		-1.054e+05	-7869.56	-0.03	0.0	54.0	68.39	1949.75	-521.79	113.99	2.031e+04	
463.41												
						108.0	68.39	1926.94	-521.79	113.99	-7869.56	
1.051e+05												
22	114	4.255e+04	3.652e+04	0.01	-45.61	0.0	82.53	813.65	-393.28	50.68	3.652e+04	-
4.286e+04												
		-4.286e+04	-5951.86	-0.14	0.0	54.0	82.53	790.84	-393.28	50.68	1.529e+04	
462.31												
						108.0	82.53	768.04	-393.28	50.68	-5951.86	
4.255e+04												
22	115	6.690e+04	5949.02	-5.83e-03	-45.61	0.0	-14.91	-1218.92	393.36	158.86	-3.653e+04	
6.690e+04												
		-6.720e+04	-3.653e+04	0.12	0.0	54.0	-14.91	-1241.72	393.36	158.86	-1.529e+04	
464.89												
						108.0	-14.91	-1264.53	393.36	158.86	5949.02	-
6.720e+04												
22	127	7.740e+04	1.021e+04	-8.32e-03	-45.61	0.0	-84.98	-1413.19	677.25	85.02	-6.294e+04	
7.740e+04												
		-7.769e+04	-6.294e+04	0.02	0.0	54.0	-84.98	-1436.00	677.25	85.02	-2.636e+04	
473.29												
						108.0	-84.98	-1458.81	677.25	85.02	1.021e+04	-
7.769e+04												
22	128	8.961e+04	1.022e+04	-9.55e-03	-45.61	0.0	-45.68	-1639.31	677.50	83.45	-6.295e+04	
8.961e+04												
		-8.990e+04	-6.295e+04	0.01	0.0	54.0	-45.68	-1662.12	677.50	83.45	-2.637e+04	
472.56												
						108.0	-45.68	-1684.92	677.50	83.45	1.022e+04	-
8.990e+04												
22	130	9.053e+04	1.022e+04	-8.77e-03	-45.61	0.0	-44.70	-1656.36	677.43	116.77	-6.295e+04	
9.053e+04												
		-9.082e+04	-6.295e+04	0.01	0.0	54.0	-44.70	-1679.16	677.43	116.77	-2.637e+04	
472.29												
						108.0	-44.70	-1701.97	677.43	116.77	1.022e+04	-
9.082e+04												
22	141	8.335e+04	7.134e+04	0.02	-45.61	0.0	100.56	1569.36	-767.84	102.23	7.134e+04	-
8.368e+04												
		-8.368e+04	-1.159e+04	-0.02	0.0	54.0	100.56	1546.56	-767.84	102.23	2.987e+04	
454.09												
						108.0	100.56	1523.75	-767.84	102.23	-1.159e+04	
8.335e+04												
22	142	7.114e+04	7.132e+04	0.01	-45.61	0.0	139.86	1343.25	-767.59	100.66	7.132e+04	-
7.147e+04												

Viale Duca Alessandro n. 11 – 43123 Parma
Cell. 335 1403156 – E mail ing.concari@gmail.com
Sito web: studioaire.it – P.IVA 02561480340

		-7.147e+04	-1.158e+04	-0.02	0.0	54.0	139.86	1320.44	-767.59	100.66	2.987e+04	
453.36												
						108.0	139.86	1297.64	-767.59	100.66	-1.158e+04	
7.114e+04												
22	151	1.665e+04	2035.97	6.88e-04	-45.61	0.0	-15.77	-288.34	135.37	78.98	-1.258e+04	
1.665e+04												
		-1.695e+04	-1.258e+04	2.59e-03	0.0	54.0	-15.77	-311.15	135.37	78.98	-5273.89	
466.19												
						108.0	-15.77	-333.95	135.37	78.98	2035.97	-
1.695e+04												
22	152	2.642e+04	2045.26	-8.18e-04	-45.61	0.0	15.67	-469.23	135.56	77.73	-1.260e+04	
2.642e+04												
		-2.672e+04	-1.260e+04	-8.54e-03	0.0	54.0	15.67	-492.04	135.56	77.73	-5275.22	
465.60												
						108.0	15.67	-514.85	135.56	77.73	2045.26	-
2.672e+04												
22	154	2.721e+04	2041.59	6.82e-04	-45.61	0.0	16.51	-483.85	135.51	106.28	-1.259e+04	
2.721e+04												
		-2.751e+04	-1.259e+04	-9.66e-03	0.0	54.0	16.51	-506.65	135.51	106.28	-5275.92	
465.38												
						108.0	16.51	-529.46	135.51	106.28	2041.59	-
2.751e+04												
22	157	1.465e+04	1.427e+04	5.71e-03	-45.61	0.0	21.98	296.97	-153.69	104.32	1.427e+04	-
1.496e+04												
		-1.496e+04	-2326.11	-5.03e-03	0.0	54.0	21.98	274.16	-153.69	104.32	5973.31	
462.17												
						108.0	21.98	251.36	-153.69	104.32	-2326.11	
1.465e+04												
22	158	4882.33	1.426e+04	4.73e-03	-45.61	0.0	53.42	116.07	-153.50	103.06	1.426e+04	-
5190.67												
		-5190.67	-2316.82	-0.01	0.0	54.0	53.42	93.27	-153.50	103.06	5971.97	
461.59												
						108.0	53.42	70.46	-153.50	103.06	-2316.82	
4882.33												
22	159	1465.13	4.16	2.58e-03	-45.61	0.0	1.53	-7.13	-0.10	77.47	4.16	
1465.13												
		-1767.82	-7.03	-1.66e-03	0.0	54.0	1.53	-29.93	-0.10	77.47	-1.44	
464.41												
						108.0	1.53	-52.74	-0.10	77.47	-7.03	-
1767.82												
22	161	2253.95	6.43	3.24e-03	-45.61	0.0	2.37	-21.74	-0.16	106.03	6.43	
2253.95												
		-2557.09	-10.71	-2.78e-03	0.0	54.0	2.37	-44.55	-0.16	106.03	-2.14	
464.18												
						108.0	2.37	-67.35	-0.16	106.03	-10.71	-
2557.09												
22	162	1.202e+04	-1.42	2.26e-03	-45.61	0.0	33.81	-202.63	0.04	104.77	-5.52	
1.202e+04												
		-1.233e+04	-5.52	-0.01	0.0	54.0	33.81	-225.44	0.04	104.77	-3.47	
463.60												
						108.0	33.81	-248.25	0.04	104.77	-1.42	-
1.233e+04												
23	16	1.851e+05	3.981e+04	-0.45	-4417.76	0.0	-186.94	3992.59	677.58	4.46	-4.113e+04	-
2.655e+05												
		-2.655e+05	-4.113e+04	-0.31	-708.75	125.0	-186.94	1783.71	323.20	4.46	2.142e+04	
9.550e+04												
						250.0	-186.94	-425.17	-31.17	4.46	3.967e+04	
1.804e+05												
23	24	1.605e+05	6.636e+04	-0.39	-3810.26	0.0	-237.54	3467.30	1129.32	7.67	-6.855e+04	-
2.336e+05												
		-2.336e+05	-6.855e+04	-0.49	-1181.25	125.0	-237.54	1562.17	538.70	7.67	3.571e+04	
8.076e+04												
						250.0	-237.54	-342.96	-51.93	7.67	6.613e+04	
1.570e+05												
23	35	1.874e+05	4.661e+04	-0.45	-4417.76	0.0	39.21	3915.67	-767.96	-4.56	4.661e+04	-
2.463e+05												
		-2.463e+05	-4.513e+04	0.29	803.25	125.0	39.21	1706.80	-366.34	-4.56	-2.428e+04	
1.051e+05												
						250.0	39.21	-502.08	35.29	-4.56	-4.497e+04	
1.804e+05												
23	47	1.627e+05	7.768e+04	-0.39	-3810.26	0.0	118.86	3386.14	-1279.94	-8.13	7.768e+04	-
2.133e+05												
		-2.133e+05	-7.522e+04	0.50	1338.75	125.0	118.86	1481.01	-610.57	-8.13	-4.047e+04	
9.087e+04												
						250.0	118.86	-424.12	58.81	-8.13	-7.496e+04	
1.569e+05												
23	49	8.076e+04	7.768e+04	-0.20	-1840.58	0.0	150.12	1657.02	-1279.95	-8.27	7.768e+04	-
1.056e+05												
		-1.056e+05	-7.523e+04	0.51	1338.75	125.0	150.12	736.73	-610.57	-8.27	-4.048e+04	
4.405e+04												
						250.0	150.12	-183.56	58.80	-8.27	-7.496e+04	
7.862e+04												
23	50	7.949e+04	7.767e+04	-0.20	-1840.58	0.0	119.34	1727.58	-1280.01	-9.41	7.767e+04	-
1.232e+05												
		-1.232e+05	-7.525e+04	0.48	1338.75	125.0	119.34	807.29	-610.63	-9.41	-4.049e+04	
3.523e+04												
						250.0	119.34	-113.00	58.74	-9.41	-7.498e+04	
7.863e+04												
23	58	1.298e+05	2.042e+04	-0.29	-2650.58	0.0	299.97	2001.27	-218.98	-26.46	2.042e+04	-
5.903e+04												
		-5.903e+04	-3.432e+04	-0.55	0.0	125.0	299.97	675.98	-218.98	-26.46	-6949.53	
1.082e+05												
						250.0	299.97	-649.31	-218.98	-26.46	-3.432e+04	
1.099e+05												
23	59	1.099e+05	3.431e+04	-0.27	-2650.58	0.0	-406.42	2805.38	218.93	26.61	-2.043e+04	-
2.602e+05												
		-2.602e+05	-2.043e+04	0.50	0.0	125.0	-406.42	1480.09	218.93	26.61	6939.62	
7717.82												

Viale Duca Alessandro n. 11 – 43123 Parma
Cell. 335 1403156 – E mail ing.concari@gmail.com
Sito web: studioaire.it – P.IVA 02561480340

						250.0	-406.42	154.80	218.93	26.61	3.431e+04	
1.099e+05												
23	66	1.308e+05	1.613e+04	-0.29	-2650.58	0.0	286.03	1982.38	-173.07	-15.97	1.613e+04	-
5.428e+04												
		-5.428e+04	-2.714e+04	-0.26	0.0	125.0	286.03	657.09	-173.07	-15.97	-5508.44	
1.106e+05												
						250.0	286.03	-668.20	-173.07	-15.97	-2.714e+04	
1.097e+05												
23	67	1.101e+05	2.713e+04	-0.27	-2650.58	0.0	-392.48	2824.27	173.02	16.12	-1.613e+04	-
2.649e+05												
		-2.649e+05	-1.613e+04	0.21	0.0	125.0	-392.48	1498.98	173.02	16.12	5498.54	
5411.70												
						250.0	-392.48	173.68	173.02	16.12	2.713e+04	
1.101e+05												
23	70	1.141e+05	5.355e+04	-0.28	-2650.58	0.0	161.00	2329.33	-574.58	-13.51	5.355e+04	-
1.405e+05												
		-1.405e+05	-9.010e+04	0.25	0.0	125.0	161.00	1004.04	-574.58	-13.51	-1.828e+04	
6.712e+04												
						250.0	161.00	-321.25	-574.58	-13.51	-9.010e+04	
1.091e+05												
23	71	1.120e+05	9.008e+04	-0.27	-2650.58	0.0	-267.45	2477.32	574.54	13.66	-5.355e+04	-
1.787e+05												
		-1.787e+05	-5.355e+04	-0.30	0.0	125.0	-267.45	1152.02	574.54	13.66	1.827e+04	
4.884e+04												
						250.0	-267.45	-173.27	574.54	13.66	9.008e+04	
1.107e+05												
23	90	1.222e+05	1.343e+04	-0.28	-2650.58	0.0	178.93	2138.88	-144.06	-17.38	1.343e+04	-
9.346e+04												
		-9.346e+04	-2.258e+04	-0.37	0.0	125.0	178.93	813.59	-144.06	-17.38	-4573.29	
9.105e+04												
						250.0	178.93	-511.70	-144.06	-17.38	-2.258e+04	
1.099e+05												
23	91	1.099e+05	2.256e+04	-0.27	-2650.58	0.0	-285.38	2667.77	144.01	17.53	-1.344e+04	-
2.257e+05												
		-2.257e+05	-1.344e+04	0.32	0.0	125.0	-285.38	1342.48	144.01	17.53	4563.39	
2.492e+04												
						250.0	-285.38	17.19	144.01	17.53	2.256e+04	
1.099e+05												
23	98	1.227e+05	1.061e+04	-0.28	-2650.58	0.0	169.77	2126.46	-113.86	-10.48	1.061e+04	-
9.033e+04												
		-9.033e+04	-1.786e+04	-0.18	0.0	125.0	169.77	801.17	-113.86	-10.48	-3625.53	
9.256e+04												
						250.0	169.77	-524.12	-113.86	-10.48	-1.786e+04	
1.098e+05												
23	99	1.100e+05	1.784e+04	-0.27	-2650.58	0.0	-276.22	2680.19	113.82	10.63	-1.061e+04	-
2.289e+05												
		-2.289e+05	-1.061e+04	0.13	0.0	125.0	-276.22	1354.90	113.82	10.63	3615.62	
2.340e+04												
						250.0	-276.22	29.61	113.82	10.63	1.784e+04	
1.100e+05												
23	102	1.136e+05	3.523e+04	-0.28	-2650.58	0.0	87.62	2354.57	-378.00	-8.86	3.523e+04	-
1.470e+05												
		-1.470e+05	-5.927e+04	0.16	0.0	125.0	87.62	1029.27	-378.00	-8.86	-1.202e+04	
6.401e+04												
						250.0	87.62	-296.02	-378.00	-8.86	-5.927e+04	
1.094e+05												
23	103	1.122e+05	5.926e+04	-0.27	-2650.58	0.0	-194.07	2452.08	377.95	9.01	-3.523e+04	-
1.722e+05												
		-1.722e+05	-3.523e+04	-0.20	0.0	125.0	-194.07	1126.79	377.95	9.01	1.201e+04	
5.195e+04												
						250.0	-194.07	-198.50	377.95	9.01	5.926e+04	
1.104e+05												
23	126	1.341e+05	2.654e+04	-0.32	-3190.58	0.0	-127.68	2883.41	451.72	3.07	-2.742e+04	-
1.913e+05												
		-1.913e+05	-2.742e+04	-0.21	-472.50	125.0	-127.68	1288.12	215.47	3.07	1.428e+04	
6.945e+04												
						250.0	-127.68	-307.17	-20.78	3.07	2.645e+04	
1.308e+05												
23	130	1.177e+05	4.424e+04	-0.28	-2785.58	0.0	-161.41	2533.22	752.88	5.21	-4.570e+04	-
1.700e+05												
		-1.700e+05	-4.570e+04	-0.33	-787.50	125.0	-161.41	1140.43	359.13	5.21	2.380e+04	
5.962e+04												
						250.0	-161.41	-252.37	-34.62	5.21	4.409e+04	
1.151e+05												
23	135	1.357e+05	3.107e+04	-0.33	-3190.58	0.0	23.09	2832.14	-511.97	-2.94	3.107e+04	-
1.785e+05												
		-1.785e+05	-3.009e+04	0.20	535.50	125.0	23.09	1236.84	-244.22	-2.94	-1.619e+04	
7.584e+04												
						250.0	23.09	-358.45	23.53	-2.94	-2.998e+04	
1.307e+05												
23	139	8.071e+04	5.179e+04	-0.20	-1840.58	0.0	92.45	1658.90	-853.30	-5.27	5.179e+04	-
1.060e+05												
		-1.060e+05	-5.015e+04	0.34	892.50	125.0	92.45	738.61	-407.05	-5.27	-2.698e+04	
4.382e+04												
						250.0	92.45	-181.68	39.20	-5.27	-4.997e+04	
7.863e+04												
23	140	7.984e+04	5.178e+04	-0.20	-1840.58	0.0	71.93	1705.94	-853.34	-6.03	5.178e+04	-
1.178e+05												
		-1.178e+05	-5.016e+04	0.32	892.50	125.0	71.93	785.65	-407.09	-6.03	-2.699e+04	
3.794e+04												
						250.0	71.93	-134.64	39.16	-6.03	-4.999e+04	
7.863e+04												
23	141	1.192e+05	5.179e+04	-0.29	-2785.58	0.0	76.19	2479.11	-853.29	-5.32	5.179e+04	-
1.565e+05												
		-1.565e+05	-5.015e+04	0.33	892.50	125.0	76.19	1086.32	-407.04	-5.32	-2.698e+04	
6.636e+04												
						250.0	76.19	-306.47	39.21	-5.32	-4.997e+04	
1.151e+05												

Viale Duca Alessandro n. 11 – 43123 Parma
Cell. 335 1403156 – E mail ing.concari@gmail.com
Sito web: studioaire.it – P.IVA 02561480340

23	145	1.191e+05	3.90	-0.29	-2785.58	0.0	-39.13	2482.87	7.52e-03	0.68	2.02	-
1.574e+05												
		-1.574e+05	2.02	-7.01e-03	0.0	125.0	-39.13	1090.07	7.52e-03	0.68	2.96	
6.590e+04												
						250.0	-39.13	-302.72	7.52e-03	0.68	3.90	
1.151e+05												
23	146	1.180e+05	-1.96	-0.29	-2785.58	0.0	-55.55	2520.50	-0.02	0.07	-1.96	-
1.668e+05												
		-1.668e+05	-7.59	-0.02	0.0	125.0	-55.55	1127.71	-0.02	0.07	-4.78	
6.120e+04												
						250.0	-55.55	-265.08	-0.02	0.07	-7.59	
1.151e+05												
23	154	1.125e+05	8843.01	-0.27	-2650.58	0.0	-73.58	2403.99	150.56	1.13	-9141.00	-
1.598e+05												
		-1.598e+05	-9141.00	-0.08	-157.50	125.0	-73.58	1078.70	71.81	1.13	4757.11	
5.790e+04												
						250.0	-73.58	-246.60	-6.94	1.13	8811.48	
1.099e+05												
23	155	8.062e+04	1.036e+04	-0.20	-1840.58	0.0	0.20	1661.90	-170.66	-0.47	1.036e+04	-
1.068e+05												
		-1.068e+05	-1.003e+04	0.06	178.50	125.0	0.20	741.61	-81.41	-0.47	-5395.26	
4.345e+04												
						250.0	0.20	-178.68	7.84	-0.47	-9992.83	
7.864e+04												
23	156	7.994e+04	1.035e+04	-0.20	-1840.58	0.0	-16.22	1699.53	-170.69	-1.08	1.035e+04	-
1.162e+05												
		-1.162e+05	-1.004e+04	0.05	178.50	125.0	-16.22	779.24	-81.44	-1.08	-5403.00	
3.875e+04												
						250.0	-16.22	-141.05	7.81	-1.08	-1.000e+04	
7.864e+04												
23	157	1.137e+05	1.036e+04	-0.27	-2650.58	0.0	-13.74	2364.94	-170.65	-0.51	1.036e+04	-
1.500e+05												
		-1.500e+05	-1.003e+04	0.06	178.50	125.0	-13.74	1039.65	-81.40	-0.51	-5394.22	
6.278e+04												
						250.0	-13.74	-285.64	7.85	-0.51	-9991.51	
1.099e+05												
23	159	8.060e+04	2.37	-0.20	-1840.58	0.0	-22.87	1662.65	5.02e-03	0.73	1.11	-
1.070e+05												
		-1.070e+05	1.11	-3.93e-03	0.0	125.0	-22.87	742.36	5.02e-03	0.73	1.74	
4.336e+04												
						250.0	-22.87	-177.93	5.02e-03	0.73	2.37	
7.864e+04												
23	160	7.993e+04	-2.87	-0.19	-1840.58	0.0	-39.28	1700.28	-0.03	0.12	-2.87	-
1.164e+05												
		-1.164e+05	-9.13	-0.02	0.0	125.0	-39.28	779.99	-0.03	0.12	-6.00	
3.866e+04												
						250.0	-39.28	-140.30	-0.03	0.12	-9.13	
7.864e+04												
23	161	1.136e+05	3.68	-0.27	-2650.58	0.0	-36.81	2365.69	7.16e-03	0.68	1.89	-
1.502e+05												
		-1.502e+05	1.89	-6.57e-03	0.0	125.0	-36.81	1040.40	7.16e-03	0.68	2.79	
6.268e+04												
						250.0	-36.81	-284.89	7.16e-03	0.68	3.68	
1.099e+05												
23	162	1.125e+05	-2.09	-0.27	-2650.58	0.0	-53.22	2403.32	-0.02	0.08	-2.09	-
1.596e+05												
		-1.596e+05	-7.81	-0.02	0.0	125.0	-53.22	1078.03	-0.02	0.08	-4.95	
5.798e+04												
						250.0	-53.22	-247.26	-0.02	0.08	-7.81	
1.099e+05												

Trave	M3 mx/mn	M2 mx/mn	D 2 / D 3	Q 2 / Q 3	N	V 2	V 3	T
	-2.655e+05	-9.451e+04	-1.54	-4417.76	-528.14	-3555.28	-1280.01	-108.99
	1.945e+05	1.071e+05	1.37	1338.75	408.46	3992.59	1397.56	187.01

MODELLO LOCALE TECNICO

Trave	Cmb	M3 mx/mn	M2 mx/mn	D 2 / D 3	Q 2 / Q 3	Pos.	N	V 2	V 3	T	M 2	M 3	
			daN m	daN m	m	daN	cm	daN	daN	daN	daN m	daN m	daN
1	4		82.13	22.27	-1.45e-04	-1786.71	0.0	-95.83	882.27	-152.77	45.89	22.27	-
24.34													
			-29.76	0.26	-5.52e-05	0.0	24.4	-95.83	-11.08	-152.77	45.89	11.26	
82.13													
							48.9	-95.83	-904.44	-152.77	45.89	0.26	-
29.76													
1	5		133.42	10.78	-9.77e-05	-2754.71	0.0	-242.55	1371.46	-41.96	15.48	10.78	-
33.48													
			-36.36	8.27	-4.76e-05	0.0	24.4	-242.55	-5.90	-41.96	15.48	9.53	
133.42													
							48.9	-242.55	-1383.25	-41.96	15.48	8.27	-
36.36													
1	7		133.42	10.78	-9.77e-05	-2754.71	0.0	-242.55	1371.46	-41.96	15.48	10.78	-
33.48													
			-36.36	8.27	-4.76e-05	0.0	24.4	-242.55	-5.90	-41.96	15.48	9.53	
133.42													
							48.9	-242.55	-1383.25	-41.96	15.48	8.27	-
36.36													
1	8		130.63	18.07	-1.44e-04	-2754.71	0.0	-238.84	1367.72	-104.82	32.93	18.07	-
35.36													
			-40.07	4.80	-5.65e-05	0.0	24.4	-238.84	-9.63	-104.82	32.93	11.43	
130.63													
							48.9	-238.84	-1386.98	-104.82	32.93	4.80	-
40.07													
1	10		62.54	18.81	-1.22e-04	-1374.39	0.0	-72.86	677.81	-132.02	39.33	18.81	-

Viale Duca Alessandro n. 11 – 43123 Parma
Cell. 335 1403156 – E mail ing.concari@gmail.com
Sito web: studioaire.it – P.IVA 02561480340

19.16			-23.75	-0.60	-4.45e-05	0.0	24.4	-72.86	-9.39	-132.02	39.33	9.11		
62.54							48.9	-72.86	-696.58	-132.02	39.33	-0.60		-
23.75	1	12	62.54	18.81	-1.22e-04	-1374.39	0.0	-72.86	677.81	-132.02	39.33	18.81		-
19.16			-23.75	-0.60	-4.45e-05	0.0	24.4	-72.86	-9.39	-132.02	39.33	9.11		
62.54							48.9	-72.86	-696.58	-132.02	39.33	-0.60		-
23.75	1	26	53.17	5.59	-9.05e-04	-1374.39	0.0	61.29	655.08	-75.02	15.30	5.59		-
23.04			-38.60	-2.37	-3.87e-04	0.0	24.4	61.29	-32.12	-75.02	15.30	1.61		
53.17							48.9	61.29	-719.31	-75.02	15.30	-2.37		-
38.60	1	27	71.60	31.33	5.64e-04	-1374.39	0.0	-255.71	700.13	-183.08	61.85	31.33		-
15.48			-15.48	1.64	2.83e-04	0.0	24.4	-255.71	12.93	-183.08	61.85	16.49		
71.60							48.9	-255.71	-674.26	-183.08	61.85	1.64		-
9.30	1	42	42.75	4.91	-3.38e-04	-1374.39	0.0	21.97	628.26	-68.18	4.39	4.55		-
27.34			-56.11	4.55	-6.08e-05	0.0	24.4	21.97	-58.93	-68.18	4.39	4.73		
42.27							48.9	21.97	-746.13	-68.18	4.39	4.91		-
56.11	1	43	77.22	49.14	9.25e-05	-1374.39	0.0	-111.19	719.89	-334.30	112.54	49.14		-
14.74			-14.74	-13.91	-3.18e-05	0.0	24.4	-111.19	32.70	-334.30	112.54	17.62		
77.22							48.9	-111.19	-654.50	-334.30	112.54	-13.91	1.20	
	1	47	76.64	49.51	1.07e-04	-1374.39	0.0	-109.31	718.09	-333.42	113.06	49.51		-
14.86			-14.86	-14.82	-1.54e-04	0.0	24.4	-109.31	30.89	-333.42	113.06	17.35		
76.64							48.9	-109.31	-656.30	-333.42	113.06	-14.82	0.17	
	1	49	71.58	41.12	-3.42e-04	-1374.39	0.0	16.17	708.51	-338.73	109.24	41.12		-
17.64			-17.64	-27.89	-5.03e-06	0.0	24.4	16.17	21.31	-338.73	109.24	6.61		
71.58							48.9	16.17	-665.88	-338.73	109.24	-27.89		-
7.19	1	58	59.11	11.10	-4.54e-04	-1374.39	0.0	-13.64	668.75	-90.49	24.19	11.10		-
20.40			-29.36	-0.51	-1.92e-04	0.0	24.4	-13.64	-18.45	-90.49	24.19	5.30		
59.11							48.9	-13.64	-705.64	-90.49	24.19	-0.51		-
29.36	1	59	68.56	19.73	2.53e-04	-1374.39	0.0	-135.54	690.35	-114.89	38.18	19.73		-
16.17			-16.17	2.54	1.12e-04	0.0	24.4	-135.54	3.16	-114.89	38.18	11.13		
68.56							48.9	-135.54	-684.03	-114.89	38.18	2.54		-
14.69	1	74	54.34	10.64	-2.05e-04	-1374.39	0.0	-31.75	656.98	-87.51	19.41	10.64		-
22.27			-37.03	2.72	-4.94e-05	0.0	24.4	-31.75	-30.21	-87.51	19.41	6.68		
54.34							48.9	-31.75	-717.41	-87.51	19.41	2.72		-
37.03	1	75	73.34	20.19	3.75e-06	-1374.39	0.0	-117.43	702.12	-117.87	42.96	20.19		-
14.29			-14.29	-0.69	-3.14e-05	0.0	24.4	-117.43	14.93	-117.87	42.96	9.75		
73.34							48.9	-117.43	-672.27	-117.87	42.96	-0.69		-
7.02	1	79	73.09	20.35	1.03e-05	-1374.39	0.0	-116.56	701.34	-117.48	43.18	20.35		-
14.35			-14.35	-1.09	-8.52e-05	0.0	24.4	-116.56	14.15	-117.48	43.18	9.63		
73.09							48.9	-116.56	-673.05	-117.48	43.18	-1.09		-
7.46	1	81	70.79	16.56	-2.05e-04	-1374.39	0.0	-70.19	697.03	-118.85	41.28	16.56		-
15.61			-15.61	-6.76	-2.27e-05	0.0	24.4	-70.19	9.83	-118.85	41.28	4.90		
70.79							48.9	-70.19	-677.36	-118.85	41.28	-6.76		-
10.80	1	90	63.47	16.38	-1.07e-04	-1374.39	0.0	-74.10	679.05	-111.07	33.51	16.38		-
18.53			-22.52	0.56	-4.16e-05	0.0	24.4	-74.10	-8.14	-111.07	33.51	8.47		
63.47							48.9	-74.10	-695.34	-111.07	33.51	0.56		-
22.52	1	92	63.47	16.38	-1.07e-04	-1374.39	0.0	-74.10	679.05	-111.07	33.51	16.38		-
18.53			-22.52	0.56	-4.16e-05	0.0	24.4	-74.10	-8.14	-111.07	33.51	8.47		
63.47							48.9	-74.10	-695.34	-111.07	33.51	0.56		-
22.52	1	93	97.66	8.73	-7.53e-05	-2019.72	0.0	-171.91	1005.18	-37.19	13.24	8.73		-
24.62			-26.91	5.90	-3.65e-05	0.0	24.4	-171.91	-4.68	-37.19	13.24	7.31		
97.66							48.9	-171.91	-1014.55	-37.19	13.24	5.90		-

Viale Duca Alessandro n. 11 – 43123 Parma
Cell. 335 1403156 – E mail ing.concari@gmail.com
Sito web: studioaire.it – P.IVA 02561480340

26.91
1 95 97.66 8.73 -7.53e-05 -2019.72 0.0 -171.91 1005.18 -37.19 13.24 8.73 -
24.62
-26.91 5.90 -3.65e-05 0.0 24.4 -171.91 -4.68 -37.19 13.24 7.31
97.66
48.9 -171.91 -1014.55 -37.19 13.24 5.90 -
26.91
1 96 95.80 13.58 -1.06e-04 -2019.72 0.0 -169.44 1002.69 -79.10 24.87 13.58 -
25.88
-29.38 3.58 -4.24e-05 0.0 24.4 -169.44 -7.17 -79.10 24.87 8.58
95.80
48.9 -169.44 -1017.04 -79.10 24.87 3.58 -
29.38
1 105 71.79 10.97 -7.57e-05 -1503.46 0.0 -95.63 746.27 -62.77 20.15 10.97 -
18.75
-21.42 3.47 -3.58e-05 0.0 24.4 -95.63 -5.46 -62.77 20.15 7.22
71.79
48.9 -95.63 -757.19 -62.77 20.15 3.47 -
21.42
1 107 71.79 10.97 -7.57e-05 -1503.46 0.0 -95.63 746.27 -62.77 20.15 10.97 -
18.75
-21.42 3.47 -3.58e-05 0.0 24.4 -95.63 -5.46 -62.77 20.15 7.22
71.79
48.9 -95.63 -757.19 -62.77 20.15 3.47 -
21.42
1 108 70.30 14.85 -1.00e-04 -1503.46 0.0 -93.66 744.28 -96.29 29.46 14.85 -
19.75
-23.40 1.62 -4.05e-05 0.0 24.4 -93.66 -7.45 -96.29 29.46 8.24
70.30
48.9 -93.66 -759.18 -96.29 29.46 1.62 -
23.40
1 111 63.65 15.90 -1.04e-04 -1374.39 0.0 -74.34 679.30 -106.88 32.35 15.90 -
18.41
-22.27 0.79 -4.10e-05 0.0 24.4 -74.34 -7.89 -106.88 32.35 8.34
63.65
48.9 -74.34 -695.09 -106.88 32.35 0.79 -
22.27
1 112 63.65 15.90 -1.04e-04 -1374.39 0.0 -74.34 679.30 -106.88 32.35 15.90 -
18.41
-22.27 0.79 -4.10e-05 0.0 24.4 -74.34 -7.89 -106.88 32.35 8.34
63.65
48.9 -74.34 -695.09 -106.88 32.35 0.79 -
22.27
1 113 65.33 11.53 -7.59e-05 -1374.39 0.0 -76.57 681.54 -69.16 21.88 11.53 -
17.28
-20.05 2.87 -3.56e-05 0.0 24.4 -76.57 -5.65 -69.16 21.88 7.20
65.33
48.9 -76.57 -692.85 -69.16 21.88 2.87 -
20.05
1 114 63.84 15.41 -1.01e-04 -1374.39 0.0 -74.59 679.55 -102.69 31.19 15.41 -
18.28
-22.02 1.02 -4.04e-05 0.0 24.4 -74.59 -7.64 -102.69 31.19 8.22
63.84
48.9 -74.59 -694.84 -102.69 31.19 1.02 -
22.02
1 115 65.33 11.53 -7.59e-05 -1374.39 0.0 -76.57 681.54 -69.16 21.88 11.53 -
17.28
-20.05 2.87 -3.56e-05 0.0 24.4 -76.57 -5.65 -69.16 21.88 7.20
65.33
48.9 -76.57 -692.85 -69.16 21.88 2.87 -
20.05
1 116 63.84 15.41 -1.01e-04 -1374.39 0.0 -74.59 679.55 -102.69 31.19 15.41 -
18.28
-22.02 1.02 -4.04e-05 0.0 24.4 -74.59 -7.64 -102.69 31.19 8.22
63.84
48.9 -74.59 -694.84 -102.69 31.19 1.02 -
22.02
2 5 147.76 21.66 -9.09e-05 -2754.71 0.0 -620.68 1388.17 -179.48 51.80 21.66 -
23.23
-23.23 -7.54 -3.62e-05 0.0 24.4 -620.68 10.82 -179.48 51.80 7.06
147.76
48.9 -620.68 -1366.54 -179.48 51.80 -7.54 -
17.94
2 6 150.12 23.83 -1.36e-04 -2754.71 0.0 -699.49 1392.18 -163.93 48.25 23.83 -
21.84
-21.84 -2.03 -4.26e-05 0.0 24.4 -699.49 14.83 -163.93 48.25 10.90
150.12
48.9 -699.49 -1362.52 -163.93 48.25 -2.03 -
14.60
2 8 150.12 23.83 -1.36e-04 -2754.71 0.0 -699.49 1392.18 -163.93 48.25 23.83 -
21.84
-21.84 -2.03 -4.26e-05 0.0 24.4 -699.49 14.83 -163.93 48.25 10.90
150.12
48.9 -699.49 -1362.52 -163.93 48.25 -2.03 -
14.60
2 9 76.35 13.50 -7.08e-05 -1374.39 0.0 -364.91 694.62 -99.63 29.19 13.50 -
9.45
-9.45 -2.29 -2.84e-05 0.0 24.4 -364.91 7.42 -99.63 29.19 5.60
76.35
48.9 -364.91 -679.77 -99.63 29.19 -2.29 -
5.82
2 25 67.52 24.43 -9.08e-04 -1374.39 0.0 -203.43 675.43 -92.66 38.88 24.43 -
13.61
-19.34 1.32 -4.29e-04 0.0 24.4 -203.43 -11.77 -92.66 38.88 12.87
67.52
48.9 -203.43 -698.96 -92.66 38.88 1.32 -
19.34
2 28 89.44 7.17 5.80e-04 -1374.39 0.0 -725.74 720.91 -82.01 14.02 7.17 -

Viale Duca Alessandro n. 11 – 43123 Parma
Cell. 335 1403156 – E mail ing.concari@gmail.com
Sito web: studioaire.it – P.IVA 02561480340

2.78
-2.78 4.08 3.45e-04 0.0 24.4 -725.74 33.72 -82.01 14.02 5.62
89.44
48.9 -725.74 -653.48 -82.01 14.02 4.08
13.68
2 36 85.70 7.82 6.24e-04 -1374.39 0.0 -597.29 713.12 -79.48 14.91 7.82 -
4.62
-4.62 -3.67 -6.49e-05 0.0 24.4 -597.29 25.93 -79.48 14.91 2.07
85.70
48.9 -597.29 -661.27 -79.48 14.91 -3.67 8.04
2 41 61.25 24.81 -3.47e-04 -1374.39 0.0 -334.61 658.24 -46.54 28.14 24.81 -
15.67
-29.81 15.69 -2.34e-04 0.0 24.4 -334.61 -28.96 -46.54 28.14 20.25
61.25
48.9 -334.61 -716.15 -46.54 28.14 15.69 -
29.81
2 44 102.22 10.86 1.18e-04 -1374.39 0.0 -677.17 748.39 -82.36 14.03 10.86 2.72
2.72 3.41 1.66e-04 0.0 24.4 -677.17 61.19 -82.36 14.03 7.14
101.66
48.9 -677.17 -626.00 -82.36 14.03 3.41
32.62
2 57 72.13 18.13 -4.52e-04 -1374.39 0.0 -293.71 685.60 -99.45 34.14 18.13 -
11.47
-12.24 -1.49 -2.06e-04 0.0 24.4 -293.71 -1.60 -99.45 34.14 8.32
72.13
48.9 -293.71 -688.79 -99.45 34.14 -1.49 -
12.24
2 60 83.10 11.18 2.63e-04 -1374.39 0.0 -520.17 707.91 -83.24 20.46 11.18 -
5.95
-5.95 2.79 1.43e-04 0.0 24.4 -520.17 20.72 -83.24 20.46 6.98
83.10
48.9 -520.17 -666.47 -83.24 20.46 2.79 4.17
2 62 77.66 18.42 -4.51e-04 -1374.39 0.0 -334.50 697.72 -96.32 31.27 18.42 -
8.91
-8.91 0.23 -2.14e-04 0.0 24.4 -334.50 10.52 -96.32 31.27 9.32
77.66
48.9 -334.50 -676.67 -96.32 31.27 0.23 -
3.76
2 73 66.95 16.42 -2.06e-04 -1374.39 0.0 -296.39 673.87 -96.65 33.48 16.42 -
13.78
-20.29 -0.80 -1.21e-04 0.0 24.4 -296.39 -13.32 -96.65 33.48 7.81
66.95
48.9 -296.39 -700.52 -96.65 33.48 -0.80 -
20.29
2 76 88.28 12.90 1.68e-05 -1374.39 0.0 -517.48 719.64 -86.03 21.12 12.90 -
3.64
-3.64 2.10 5.77e-05 0.0 24.4 -517.48 32.44 -86.03 21.12 7.50
88.28
48.9 -517.48 -654.75 -86.03 21.12 2.10
12.21
2 81 68.35 13.90 -2.02e-04 -1374.39 0.0 -328.73 676.40 -100.75 33.96 13.90 -
13.00
-18.28 -4.75 -1.41e-05 0.0 24.4 -328.73 -10.79 -100.75 33.96 4.58
68.35
48.9 -328.73 -697.99 -100.75 33.96 -4.75 -
18.28
2 89 76.35 13.50 -7.08e-05 -1374.39 0.0 -364.91 694.62 -99.63 29.19 13.50 -
9.45
-9.45 -2.29 -2.84e-05 0.0 24.4 -364.91 7.42 -99.63 29.19 5.60
76.35
48.9 -364.91 -679.77 -99.63 29.19 -2.29 -
5.82
2 93 108.68 16.24 -7.01e-05 -2019.72 0.0 -462.44 1018.06 -132.94 38.43 16.24 -
16.75
-16.75 -5.33 -2.79e-05 0.0 24.4 -462.44 8.20 -132.94 38.43 5.45
108.68
48.9 -462.44 -1001.66 -132.94 38.43 -5.33 -
12.74
2 94 110.26 17.69 -9.99e-05 -2019.72 0.0 -514.98 1020.74 -122.57 36.06 17.69 -
15.82
-15.82 -1.66 -3.22e-05 0.0 24.4 -514.98 10.87 -122.57 36.06 8.01
110.26
48.9 -514.98 -998.99 -122.57 36.06 -1.66 -
10.51
2 96 110.26 17.69 -9.99e-05 -2019.72 0.0 -514.98 1020.74 -122.57 36.06 17.69 -
15.82
-15.82 -1.66 -3.22e-05 0.0 24.4 -514.98 10.87 -122.57 36.06 8.01
110.26
48.9 -514.98 -998.99 -122.57 36.06 -1.66 -
10.51
2 101 76.35 13.50 -7.08e-05 -1374.39 0.0 -364.91 694.62 -99.63 29.19 13.50 -
9.45
-9.45 -2.29 -2.84e-05 0.0 24.4 -364.91 7.42 -99.63 29.19 5.60
76.35
48.9 -364.91 -679.77 -99.63 29.19 -2.29 -
5.82
2 105 82.82 14.05 -7.07e-05 -1503.46 0.0 -384.42 759.30 -106.29 31.04 14.05 -
10.91
-10.91 -2.90 -2.83e-05 0.0 24.4 -384.42 7.58 -106.29 31.04 5.57
82.82
48.9 -384.42 -744.15 -106.29 31.04 -2.90 -
7.21
2 106 84.08 15.21 -9.46e-05 -1503.46 0.0 -426.45 761.44 -98.00 29.14 15.21 -
10.17
-10.17 0.04 -3.17e-05 0.0 24.4 -426.45 9.72 -98.00 29.14 7.62
84.08
48.9 -426.45 -742.01 -98.00 29.14 0.04 -
5.42

Viale Duca Alessandro n. 11 – 43123 Parma
Cell. 335 1403156 – E mail ing.concari@gmail.com
Sito web: studioaire.it – P.IVA 02561480340

2	108	84.08	15.21	-9.46e-05	-1503.46	0.0	-426.45	761.44	-98.00	29.14	15.21	-
10.17												
		-10.17	0.04	-3.17e-05	0.0	24.4	-426.45	9.72	-98.00	29.14	7.62	
84.08												
						48.9	-426.45	-742.01	-98.00	29.14	0.04	-
5.42												
2	113	76.35	13.50	-7.08e-05	-1374.39	0.0	-364.91	694.62	-99.63	29.19	13.50	-
9.45												
		-9.45	-2.29	-2.84e-05	0.0	24.4	-364.91	7.42	-99.63	29.19	5.60	
76.35												
						48.9	-364.91	-679.77	-99.63	29.19	-2.29	-
5.82												
2	114	77.62	14.66	-9.47e-05	-1374.39	0.0	-406.94	696.76	-91.34	27.30	14.66	-
8.71												
		-8.71	0.65	-3.18e-05	0.0	24.4	-406.94	9.56	-91.34	27.30	7.65	
77.62												
						48.9	-406.94	-677.63	-91.34	27.30	0.65	-
4.04												
2	116	77.62	14.66	-9.47e-05	-1374.39	0.0	-406.94	696.76	-91.34	27.30	14.66	-
8.71												
		-8.71	0.65	-3.18e-05	0.0	24.4	-406.94	9.56	-91.34	27.30	7.65	
77.62												
						48.9	-406.94	-677.63	-91.34	27.30	0.65	-
4.04												
3	2	110.83	30.09	-1.47e-04	-1786.71	0.0	212.73	1013.79	-152.56	49.95	30.09	-
29.77												
		-29.77	9.26	-5.30e-05	0.0	24.4	212.73	120.43	-152.56	49.95	19.68	
108.86												
						48.9	212.73	-772.92	-152.56	49.95	9.26	
29.11												
3	4	110.83	30.09	-1.47e-04	-1786.71	0.0	212.73	1013.79	-152.56	49.95	30.09	-
29.77												
		-29.77	9.26	-5.30e-05	0.0	24.4	212.73	120.43	-152.56	49.95	19.68	
108.86												
						48.9	212.73	-772.92	-152.56	49.95	9.26	
29.11												
3	6	154.84	27.25	-1.45e-04	-2754.71	0.0	142.46	1483.55	-104.73	38.26	27.25	-
40.07												
		-40.07	17.90	-5.43e-05	0.0	24.4	142.46	106.19	-104.73	38.26	22.57	
154.23												
						48.9	142.46	-1271.16	-104.73	38.26	17.90	
11.84												
3	8	154.84	27.25	-1.45e-04	-2754.71	0.0	142.46	1483.55	-104.73	38.26	27.25	-
40.07												
		-40.07	17.90	-5.43e-05	0.0	24.4	142.46	106.19	-104.73	38.26	22.57	
154.23												
						48.9	142.46	-1271.16	-104.73	38.26	17.90	
11.84												
3	11	81.25	17.62	-7.65e-05	-1374.39	0.0	105.08	754.92	-77.41	25.10	17.62	-
20.05												
		-20.05	7.03	-3.41e-05	0.0	24.4	105.08	67.73	-77.41	25.10	12.32	
80.50												
						48.9	105.08	-619.47	-77.41	25.10	7.03	
13.06												
3	15	125.87	15.66	-7.46e-05	-2342.39	0.0	34.81	1224.68	-29.58	13.41	14.78	-
30.35												
		-30.35	14.78	-3.54e-05	0.0	24.4	34.81	53.49	-29.58	13.41	15.22	
125.87												
						48.9	34.81	-1117.71	-29.58	13.41	15.66	-
4.21												
3	25	92.16	25.80	-9.08e-04	-1374.39	0.0	108.62	803.52	-168.75	44.72	25.80	-
22.60												
		-22.60	-1.69	-4.42e-04	0.0	24.4	108.62	116.32	-168.75	44.72	12.06	
89.90												
						48.9	108.62	-570.87	-168.75	44.72	-1.69	
34.43												
3	42	82.84	47.91	-3.44e-04	-1374.39	0.0	316.97	884.11	3.38	24.06	8.84	-
56.11												
		-56.11	8.84	-5.89e-05	0.0	24.4	316.97	196.91	3.38	24.06	28.38	
76.05												
						48.9	316.97	-490.28	3.38	24.06	47.91	
40.22												
3	44	80.70	46.11	9.68e-05	-1374.39	0.0	345.05	864.29	-4.95	28.55	12.09	-
52.12												
		-52.12	12.09	1.59e-04	0.0	24.4	345.05	177.09	-4.95	28.55	29.10	
75.14												
						48.9	345.05	-510.10	-4.95	28.55	46.11	
34.41												
3	45	105.87	52.77	-3.63e-04	-1374.39	0.0	215.47	777.80	-363.62	94.60	52.77	-
1.78												
		-1.78	-30.16	-1.25e-04	0.0	24.4	215.47	90.60	-363.62	94.60	11.30	
104.41												
						48.9	215.47	-596.59	-363.62	94.60	-30.16	
42.61												
3	47	104.26	56.79	1.09e-04	-1374.39	0.0	196.39	765.31	-380.73	98.49	56.79	0.16
		0.16	-35.11	-1.52e-04	0.0	24.4	196.39	78.11	-380.73	98.49	10.84	
103.19												
						48.9	196.39	-609.08	-380.73	98.49	-35.11	
38.24												
3	73	85.93	25.49	-2.07e-04	-1374.39	0.0	55.42	731.31	-148.38	36.65	25.49	-
8.89												
		-8.89	-10.03	-1.28e-04	0.0	24.4	55.42	44.11	-148.38	36.65	7.73	
85.90												
						48.9	55.42	-643.08	-148.38	36.65	-10.03	
12.70												
3	74	82.77	25.07	-2.08e-04	-1374.39	0.0	221.19	821.52	-57.41	29.80	15.92	-
37.03												
		-37.03	15.92	-4.76e-05	0.0	24.4	221.19	134.33	-57.41	29.80	20.49	

												79.81
						48.9	221.19	-552.86	-57.41	29.80	25.07	28.67
3	76	82.12	24.22	3.76e-06	-1374.39	0.0	235.94	813.08	-61.83	32.02	17.41	-35.16
		-35.16	17.41	5.09e-05	0.0	24.4	235.94	125.89	-61.83	32.02	20.82	79.59
						48.9	235.94	-561.31	-61.83	32.02	24.22	26.36
3	77	85.97	25.32	-2.14e-04	-1374.39	0.0	65.79	729.75	-146.45	36.78	25.32	-8.44
		-8.44	-9.35	-7.45e-05	0.0	24.4	65.79	42.55	-146.45	36.78	7.99	85.97
						48.9	65.79	-644.64	-146.45	36.78	-9.35	12.40
3	79	85.60	27.16	1.15e-05	-1374.39	0.0	59.80	724.43	-154.72	38.74	27.16	-7.46
		-7.46	-11.56	-8.35e-05	0.0	24.4	59.80	37.23	-154.72	38.74	7.80	85.60
						48.9	59.80	-649.96	-154.72	38.74	-11.56	10.69
3	90	84.72	22.41	-1.08e-04	-1374.39	0.0	155.83	776.51	-112.03	36.64	22.41	-22.52
		-22.52	7.11	-3.99e-05	0.0	24.4	155.83	89.32	-112.03	36.64	14.76	83.30
						48.9	155.83	-597.87	-112.03	36.64	7.11	21.15
3	91	81.25	17.62	-7.65e-05	-1374.39	0.0	105.08	754.92	-77.41	25.10	17.62	-20.05
		-20.05	7.03	-3.41e-05	0.0	24.4	105.08	67.73	-77.41	25.10	12.32	80.50
						48.9	105.08	-619.47	-77.41	25.10	7.03	13.06
3	92	84.72	22.41	-1.08e-04	-1374.39	0.0	155.83	776.51	-112.03	36.64	22.41	-22.52
		-22.52	7.11	-3.99e-05	0.0	24.4	155.83	89.32	-112.03	36.64	14.76	83.30
						48.9	155.83	-597.87	-112.03	36.64	7.11	21.15
3	94	114.06	20.52	-1.07e-04	-2019.72	0.0	108.99	1089.69	-80.14	28.85	20.52	-29.39
		-29.39	12.87	-4.07e-05	0.0	24.4	108.99	79.83	-80.14	28.85	16.69	113.55
						48.9	108.99	-930.04	-80.14	28.85	12.87	9.63
3	95	110.74	15.72	-7.53e-05	-2019.72	0.0	58.23	1068.09	-45.52	17.31	15.72	-26.92
		-26.92	12.78	-3.49e-05	0.0	24.4	58.23	58.23	-45.52	17.31	14.25	110.74
						48.9	58.23	-951.63	-45.52	17.31	12.78	1.55
3	96	114.06	20.52	-1.07e-04	-2019.72	0.0	108.99	1089.69	-80.14	28.85	20.52	-29.39
		-29.39	12.87	-4.07e-05	0.0	24.4	108.99	79.83	-80.14	28.85	16.69	113.55
						48.9	108.99	-930.04	-80.14	28.85	12.87	9.63
3	106	89.90	21.07	-1.01e-04	-1503.46	0.0	136.31	834.83	-98.73	32.78	21.07	-23.40
		-23.40	8.25	-3.89e-05	0.0	24.4	136.31	83.10	-98.73	32.78	14.66	88.79
						48.9	136.31	-668.63	-98.73	32.78	8.25	17.23
3	107	87.12	17.24	-7.63e-05	-1503.46	0.0	95.71	817.56	-71.03	23.54	17.24	-21.42
		-21.42	8.18	-3.42e-05	0.0	24.4	95.71	65.83	-71.03	23.54	12.71	86.55
						48.9	95.71	-685.90	-71.03	23.54	8.18	10.76
3	108	89.90	21.07	-1.01e-04	-1503.46	0.0	136.31	834.83	-98.73	32.78	21.07	-23.40
		-23.40	8.25	-3.89e-05	0.0	24.4	136.31	83.10	-98.73	32.78	14.66	88.79
						48.9	136.31	-668.63	-98.73	32.78	8.25	17.23
3	109	81.25	17.62	-7.65e-05	-1374.39	0.0	105.08	754.92	-77.41	25.10	17.62	-20.05
		-20.05	7.03	-3.41e-05	0.0	24.4	105.08	67.73	-77.41	25.10	12.32	80.50
						48.9	105.08	-619.47	-77.41	25.10	7.03	13.06
3	111	84.37	21.93	-1.05e-04	-1374.39	0.0	150.76	774.35	-108.57	35.49	21.93	-22.27
		-22.27	7.10	-3.93e-05	0.0	24.4	150.76	87.16	-108.57	35.49	14.52	83.02
						48.9	150.76	-600.03	-108.57	35.49	7.10	20.34
3	112	84.37	21.93	-1.05e-04	-1374.39	0.0	150.76	774.35	-108.57	35.49	21.93	-22.27
		-22.27	7.10	-3.93e-05	0.0	24.4	150.76	87.16	-108.57	35.49	14.52	83.02
						48.9	150.76	-600.03	-108.57	35.49	7.10	20.34
3	114	84.03	21.45	-1.02e-04	-1374.39	0.0	145.68	772.20	-105.10	34.33	21.45	-22.03
		-22.03	7.10	-3.87e-05	0.0	24.4	145.68	85.00	-105.10	34.33	14.27	82.74
						48.9	145.68	-602.19	-105.10	34.33	7.10	19.53
3	115	81.25	17.62	-7.65e-05	-1374.39	0.0	105.08	754.92	-77.41	25.10	17.62	-20.05

Viale Duca Alessandro n. 11 – 43123 Parma
Cell. 335 1403156 – E mail ing.concari@gmail.com
Sito web: studioaire.it – P.IVA 02561480340

		-20.05	7.03	-3.41e-05	0.0	24.4	105.08	67.73	-77.41	25.10	12.32	80.50
						48.9	105.08	-619.47	-77.41	25.10	7.03	13.06
3	116	84.03	21.45	-1.02e-04	-1374.39	0.0	145.68	772.20	-105.10	34.33	21.45	-22.03
		-22.03	7.10	-3.87e-05	0.0	24.4	145.68	85.00	-105.10	34.33	14.27	82.74
						48.9	145.68	-602.19	-105.10	34.33	7.10	19.53
4	5	128.15	21.70	-8.61e-05	-2754.71	0.0	-470.46	1285.66	-190.98	49.43	21.70	-17.95
		-62.78	-23.76	-3.44e-05	0.0	24.4	-470.46	-91.69	-190.98	49.43	-1.03	127.98
						48.9	-470.46	-1469.04	-190.98	49.43	-23.76	-62.78
4	6	128.68	25.37	-1.30e-04	-2754.71	0.0	-575.33	1272.51	-191.81	49.10	25.37	-14.60
		-65.86	-22.62	-4.01e-05	0.0	24.4	-575.33	-104.84	-191.81	49.10	1.37	128.11
						48.9	-575.33	-1482.20	-191.81	49.10	-22.62	-65.86
4	8	128.68	25.37	-1.30e-04	-2754.71	0.0	-575.33	1272.51	-191.81	49.10	25.37	-14.60
		-65.86	-22.62	-4.01e-05	0.0	24.4	-575.33	-104.84	-191.81	49.10	1.37	128.11
						48.9	-575.33	-1482.20	-191.81	49.10	-22.62	-65.86
4	9	64.56	14.16	-6.79e-05	-1374.39	0.0	-304.25	629.75	-111.44	28.46	14.16	-5.83
		-33.91	-13.25	-2.71e-05	0.0	24.4	-304.25	-57.44	-111.44	28.46	0.46	64.12
						48.9	-304.25	-744.64	-111.44	28.46	-13.25	-33.91
4	25	62.46	29.31	-9.07e-04	-1374.39	0.0	-298.76	676.69	-173.86	32.68	29.31	-19.36
		-23.71	-32.55	-4.26e-04	0.0	24.4	-298.76	-10.51	-173.86	32.68	-1.62	62.46
						48.9	-298.76	-697.70	-173.86	32.68	-32.55	-23.71
4	41	60.08	34.54	-3.47e-04	-1374.39	0.0	-410.04	710.86	-195.56	22.65	34.54	-29.82
		-29.82	-44.20	-2.30e-04	0.0	24.4	-410.04	23.67	-195.56	22.65	-4.83	60.08
						48.9	-410.04	-663.53	-195.56	22.65	-44.20	-18.00
4	44	76.19	22.76	1.27e-04	-1374.39	0.0	-625.01	495.89	-26.60	31.61	8.90	32.62
		-61.16	8.90	1.68e-04	0.0	24.4	-625.01	-191.30	-26.60	31.61	15.83	69.72
						48.9	-625.01	-878.50	-26.60	31.61	22.76	-61.16
4	49	61.63	24.33	-3.37e-04	-1374.39	0.0	-444.30	698.27	-176.47	23.36	24.33	-25.19
		-25.19	-44.22	1.23e-05	0.0	24.4	-444.30	11.07	-176.47	23.36	-9.95	61.63
						48.9	-444.30	-676.12	-176.47	23.36	-44.22	-19.52
4	62	65.21	20.55	-4.47e-04	-1374.39	0.0	-350.23	622.38	-122.27	31.80	20.55	-3.76
		-35.09	-13.42	-2.12e-04	0.0	24.4	-350.23	-64.81	-122.27	31.80	3.56	64.56
						48.9	-350.23	-752.00	-122.27	31.80	-13.42	-35.09
4	73	61.58	19.30	-2.06e-04	-1374.39	0.0	-244.75	678.28	-150.20	27.05	19.30	-20.30
		-24.53	-28.31	-1.20e-04	0.0	24.4	-244.75	-8.91	-150.20	27.05	-4.50	61.58
						48.9	-244.75	-696.11	-150.20	27.05	-28.31	-24.53
4	76	69.17	12.93	2.28e-05	-1374.39	0.0	-475.60	567.19	-73.54	29.52	12.93	12.21
		-46.58	3.03	5.94e-05	0.0	24.4	-475.60	-120.01	-73.54	29.52	7.98	66.81
						48.9	-475.60	-807.20	-73.54	29.52	3.03	-46.58
4	81	62.25	14.80	-2.01e-04	-1374.39	0.0	-259.58	672.81	-141.95	27.36	14.80	-18.28
		-25.19	-28.36	-1.34e-05	0.0	24.4	-259.58	-14.38	-141.95	27.36	-6.78	62.25
						48.9	-259.58	-701.58	-141.95	27.36	-28.36	-25.19
4	89	64.56	14.16	-6.79e-05	-1374.39	0.0	-304.25	629.75	-111.44	28.46	14.16	-5.83
		-33.91	-13.25	-2.71e-05	0.0	24.4	-304.25	-57.44	-111.44	28.46	0.46	64.12
						48.9	-304.25	-744.64	-111.44	28.46	-13.25	-33.91
4	93	94.04	16.35	-6.65e-05	-2019.72	0.0	-354.21	941.07	-142.18	36.75	16.35	-12.74
		-46.37	-17.60	-2.65e-05	0.0	24.4	-354.21	-68.79	-142.18	36.75	-0.63	93.87
						48.9	-354.21	-1078.65	-142.18	36.75	-17.60	-46.37
4	94	94.40	18.80	-9.58e-05	-2019.72	0.0	-424.12	932.31	-142.73	36.53	18.80	-10.51
		-48.43	-16.85	-3.03e-05	0.0	24.4	-424.12	-77.55	-142.73	36.53	0.98	93.96

Viale Duca Alessandro n. 11 – 43123 Parma
Cell. 335 1403156 – E mail ing.concari@gmail.com
Sito web: studioaire.it – P.IVA 02561480340

							48.9	-424.12	-1087.42	-142.73	36.53	-16.85	-
48.43													
4	96	94.40	18.80	-9.58e-05	-2019.72	0.0	-424.12	932.31	-142.73	36.53	18.80	-	
10.51													
		-48.43	-16.85	-3.03e-05	0.0	24.4	-424.12	-77.55	-142.73	36.53	0.98		
93.96													
							48.9	-424.12	-1087.42	-142.73	36.53	-16.85	-
48.43													
4	101	64.56	14.16	-6.79e-05	-1374.39	0.0	-304.25	629.75	-111.44	28.46	14.16	-	
5.83													
		-33.91	-13.25	-2.71e-05	0.0	24.4	-304.25	-57.44	-111.44	28.46	0.46		
64.12													
							48.9	-304.25	-744.64	-111.44	28.46	-13.25	-
33.91													
4	105	70.46	14.60	-6.76e-05	-1503.46	0.0	-314.24	692.02	-117.58	30.12	14.60	-	
7.21													
		-36.40	-14.12	-2.70e-05	0.0	24.4	-314.24	-59.71	-117.58	30.12	0.24		
70.07													
							48.9	-314.24	-811.44	-117.58	30.12	-14.12	-
36.40													
4	106	70.74	16.56	-9.11e-05	-1503.46	0.0	-370.17	685.00	-118.02	29.94	16.56	-	
5.42													
		-38.05	-13.51	-3.00e-05	0.0	24.4	-370.17	-66.73	-118.02	29.94	1.52		
70.14													
							48.9	-370.17	-818.45	-118.02	29.94	-13.51	-
38.05													
4	108	70.74	16.56	-9.11e-05	-1503.46	0.0	-370.17	685.00	-118.02	29.94	16.56	-	
5.42													
		-38.05	-13.51	-3.00e-05	0.0	24.4	-370.17	-66.73	-118.02	29.94	1.52		
70.14													
							48.9	-370.17	-818.45	-118.02	29.94	-13.51	-
38.05													
4	113	64.56	14.16	-6.79e-05	-1374.39	0.0	-304.25	629.75	-111.44	28.46	14.16	-	
5.83													
		-33.91	-13.25	-2.71e-05	0.0	24.4	-304.25	-57.44	-111.44	28.46	0.46		
64.12													
							48.9	-304.25	-744.64	-111.44	28.46	-13.25	-
33.91													
4	114	64.85	16.12	-9.14e-05	-1374.39	0.0	-360.18	622.74	-111.87	28.28	16.12	-	
4.04													
		-35.56	-12.64	-3.01e-05	0.0	24.4	-360.18	-64.46	-111.87	28.28	1.74		
64.19													
							48.9	-360.18	-751.65	-111.87	28.28	-12.64	-
35.56													
4	116	64.85	16.12	-9.14e-05	-1374.39	0.0	-360.18	622.74	-111.87	28.28	16.12	-	
4.04													
		-35.56	-12.64	-3.01e-05	0.0	24.4	-360.18	-64.46	-111.87	28.28	1.74		
64.19													
							48.9	-360.18	-751.65	-111.87	28.28	-12.64	-
35.56													
5	4	78.77	23.21	8.71e-04	-101.56	0.0	-198.38	-109.52	305.53	-99.22	-16.96		
78.77													
		-1.36	-16.96	-3.10e-05	0.0	25.0	-198.38	-160.31	305.53	-99.22	3.13		
45.05													
							50.0	-198.38	-211.09	305.53	-99.22	23.21	-
1.36													
5	6	96.96	24.03	9.48e-04	-101.56	0.0	-208.83	-149.72	306.70	-103.30	-15.34		
96.96													
		-3.27	-15.34	-3.20e-05	0.0	25.0	-208.83	-200.50	306.70	-103.30	4.35		
53.19													
							50.0	-208.83	-251.28	306.70	-103.30	24.03	-
3.27													
5	8	96.96	24.03	9.48e-04	-101.56	0.0	-208.83	-149.72	306.70	-103.30	-15.34		
96.96													
		-3.27	-15.34	-3.20e-05	0.0	25.0	-208.83	-200.50	306.70	-103.30	4.35		
53.19													
							50.0	-208.83	-251.28	306.70	-103.30	24.03	-
3.27													
5	11	57.89	15.82	5.50e-04	-78.12	0.0	-146.91	-77.91	194.81	-64.13	-9.56		
57.89													
		-0.59	-9.56	-2.20e-05	0.0	25.0	-146.91	-116.97	194.81	-64.13	3.13		
33.53													
							50.0	-146.91	-156.04	194.81	-64.13	15.82	-
0.59													
5	31	102.54	32.89	2.47e-04	-78.12	0.0	-275.57	-176.33	318.22	-114.57	20.23		
102.54													
		-4.82	20.23	3.36e-04	0.0	25.0	-275.57	-215.39	318.22	-114.57	26.56		
53.74													
							50.0	-275.57	-254.46	318.22	-114.57	32.89	-
4.82													
5	48	53.98	-7.69	2.44e-03	-78.12	0.0	143.65	-80.35	302.25	-75.73	-57.44		
53.98													
		-7.63	-57.44	8.04e-05	0.0	25.0	143.65	-119.41	302.25	-75.73	-32.56		
28.06													
							50.0	143.65	-158.48	302.25	-75.73	-7.69	-
7.63													
5	50	33.82	-11.81	2.44e-03	-78.12	0.0	239.38	-35.17	281.74	-66.42	-71.22		
33.82													
		-4.58	-71.22	-2.65e-04	0.0	25.0	239.38	-74.23	281.74	-66.42	-41.52		
19.50													
							50.0	239.38	-113.29	281.74	-66.42	-11.81	-
4.58													
5	51	80.78	46.00	-6.95e-04	-78.12	0.0	-477.68	-123.12	214.54	-89.66	35.01		
80.78													
		1.00	35.01	2.21e-04	0.0	25.0	-477.68	-162.18	214.54	-89.66	40.50		
45.77													
						50.0	-477.68	-201.24	214.54	-89.66	46.00	1.00	
5	53	64.07	45.44	-6.99e-04	-78.12	0.0	-510.69	-83.78	190.51	-80.61	26.51		

Viale Duca Alessandro n. 11 – 43123 Parma
Cell. 335 1403156 – E mail ing.concari@gmail.com
Sito web: studioaire.it – P.IVA 02561480340

64.07														
		4.00	26.51	1.37e-04	0.0	25.0	-510.69	-122.84	190.51	-80.61	35.98			
38.92														
						50.0	-510.69	-161.90	190.51	-80.61	45.44	4.00		
5	56	50.52	-11.25	2.44e-03	-78.12	0.0	272.39	-74.51	305.77	-75.47	-62.73			
50.52														
		-7.58	-62.73	-1.82e-04	0.0	25.0	272.39	-113.57	305.77	-75.47	-36.99			
26.35														
						50.0	272.39	-152.63	305.77	-75.47	-11.25	-		
7.58														
5	80	54.16	4.64	1.43e-03	-78.12	0.0	-5.30	-75.16	237.25	-66.87	-31.77			
54.16														
		-3.85	-31.77	2.40e-05	0.0	25.0	-5.30	-114.22	237.25	-66.87	-13.57			
30.03														
						50.0	-5.30	-153.28	237.25	-66.87	4.64	-		
3.85														
5	82	48.29	4.45	1.42e-03	-78.12	0.0	20.42	-61.33	248.65	-69.85	-38.05			
48.29														
		-2.52	-38.05	-1.30e-04	0.0	25.0	20.42	-100.39	248.65	-69.85	-16.80			
27.77														
						50.0	20.42	-139.45	248.65	-69.85	4.45	-		
2.52														
5	83	71.24	30.02	-1.59e-04	-78.12	0.0	-322.12	-103.28	196.74	-75.32	14.09			
71.24														
		0.70	14.09	8.31e-05	0.0	25.0	-322.12	-142.35	196.74	-75.32	22.06			
40.85														
						50.0	-322.12	-181.41	196.74	-75.32	30.02	0.70		
5	85	66.85	31.37	-1.61e-04	-78.12	0.0	-352.77	-91.92	206.68	-78.43	10.07			
66.85														
		2.02	10.07	4.44e-05	0.0	25.0	-352.77	-130.98	206.68	-78.43	20.72			
39.32														
						50.0	-352.77	-170.04	206.68	-78.43	31.37	2.02		
5	88	52.68	3.09	1.43e-03	-78.12	0.0	51.06	-72.69	238.70	-66.74	-34.03			
52.68														
		-3.83	-34.03	-9.10e-05	0.0	25.0	51.06	-111.76	238.70	-66.74	-15.47			
29.30														
						50.0	51.06	-150.82	238.70	-66.74	3.09	-		
3.83														
5	91	57.89	15.82	5.50e-04	-78.12	0.0	-146.91	-77.91	194.81	-64.13	-9.56			
57.89														
		-0.59	-9.56	-2.20e-05	0.0	25.0	-146.91	-116.97	194.81	-64.13	3.13			
33.53														
						50.0	-146.91	-156.04	194.81	-64.13	15.82	-		
0.59														
5	92	60.23	17.59	6.54e-04	-78.12	0.0	-151.84	-83.40	229.66	-74.70	-12.58			
60.23														
		-0.99	-12.58	-2.36e-05	0.0	25.0	-151.84	-122.47	229.66	-74.70	2.50			
34.50														
						50.0	-151.84	-161.53	229.66	-74.70	17.59	-		
0.99														
5	94	72.36	18.13	7.05e-04	-78.12	0.0	-158.81	-110.20	230.44	-77.42	-11.50			
72.36														
		-2.26	-11.50	-2.43e-05	0.0	25.0	-158.81	-149.26	230.44	-77.42	3.31			
39.93														
						50.0	-158.81	-188.32	230.44	-77.42	18.13	-		
2.26														
5	96	72.36	18.13	7.05e-04	-78.12	0.0	-158.81	-110.20	230.44	-77.42	-11.50			
72.36														
		-2.26	-11.50	-2.43e-05	0.0	25.0	-158.81	-149.26	230.44	-77.42	3.31			
39.93														
						50.0	-158.81	-188.32	230.44	-77.42	18.13	-		
2.26														
5	106	62.19	17.34	6.43e-04	-78.13	0.0	-152.25	-87.66	222.85	-73.13	-11.76			
62.19														
		-1.16	-11.76	-2.34e-05	0.0	25.0	-152.25	-126.73	222.85	-73.13	2.79			
35.39														
						50.0	-152.25	-165.79	222.85	-73.13	17.34	-		
1.16														
5	108	62.19	17.34	6.43e-04	-78.12	0.0	-152.25	-87.66	222.85	-73.13	-11.76			
62.19														
		-1.16	-11.76	-2.34e-05	0.0	25.0	-152.25	-126.73	222.85	-73.13	2.79			
35.39														
						50.0	-152.25	-165.79	222.85	-73.13	17.34	-		
1.16														
5	109	57.89	15.82	5.50e-04	-78.12	0.0	-146.91	-77.91	194.81	-64.13	-9.56			
57.89														
		-0.59	-9.56	-2.20e-05	0.0	25.0	-146.91	-116.97	194.81	-64.13	3.13			
33.53														
						50.0	-146.91	-156.04	194.81	-64.13	15.82	-		
0.59														
5	112	60.00	17.41	6.43e-04	-78.12	0.0	-151.35	-82.85	226.18	-73.64	-12.28			
60.00														
		-0.95	-12.28	-2.35e-05	0.0	25.0	-151.35	-121.92	226.18	-73.64	2.56			
34.41														
						50.0	-151.35	-160.98	226.18	-73.64	17.41	-		
0.95														
5	114	59.76	17.23	6.33e-04	-78.12	0.0	-150.85	-82.31	222.69	-72.58	-11.98			
59.76														
		-0.91	-11.98	-2.33e-05	0.0	25.0	-150.85	-121.37	222.69	-72.58	2.63			
34.31														
						50.0	-150.85	-160.43	222.69	-72.58	17.23	-		
0.91														
5	115	57.89	15.82	5.50e-04	-78.12	0.0	-146.91	-77.91	194.81	-64.13	-9.56			
57.89														
		-0.59	-9.56	-2.20e-05	0.0	25.0	-146.91	-116.97	194.81	-64.13	3.13			
33.53														
						50.0	-146.91	-156.04	194.81	-64.13	15.82	-		
0.59														

Viale Duca Alessandro n. 11 – 43123 Parma
Cell. 335 1403156 – E mail ing.concari@gmail.com
Sito web: studioaire.it – P.IVA 02561480340

5	116	59.76	17.23	6.33e-04	-78.13	0.0	-150.85	-82.31	222.69	-72.58	-11.98	59.76	
		-0.91	-11.98	-2.33e-05	0.0	25.0	-150.85	-121.37	222.69	-72.58	2.63	34.31	
						50.0	-150.85	-160.43	222.69	-72.58	17.23	0.91	-
6	4	53.36	33.02	-1.56e-04	-1786.71	0.0	192.33	1056.34	11.63	-17.57	33.02	98.94	-
		-98.94	18.00	-3.53e-05	0.0	24.4	192.33	162.99	11.63	-17.57	25.51	50.08	
						48.9	192.33	-730.37	11.63	-17.57	18.00	19.26	-
6	5	105.97	31.52	-1.13e-04	-2754.71	0.0	162.88	1535.14	-48.31	3.19	31.52	103.13	-
		-103.13	7.47	-3.07e-05	0.0	24.4	162.88	157.79	-48.31	3.19	19.49	103.78	
						48.9	162.88	-1219.56	-48.31	3.19	7.47	25.99	-
6	6	99.69	39.78	-1.61e-04	-2754.71	0.0	166.43	1558.50	-31.05	-7.36	39.78	115.84	-
		-115.84	12.78	-3.38e-05	0.0	24.4	166.43	181.15	-31.05	-7.36	26.28	96.78	
						48.9	166.43	-1196.20	-31.05	-7.36	12.78	27.28	-
6	8	99.69	39.78	-1.61e-04	-2754.71	0.0	166.43	1558.50	-31.05	-7.36	39.78	115.84	-
		-115.84	12.78	-3.38e-05	0.0	24.4	166.43	181.15	-31.05	-7.36	26.28	96.78	
						48.9	166.43	-1196.20	-31.05	-7.36	12.78	27.28	-
6	13	92.21	25.81	-8.81e-05	-2342.39	0.0	119.31	1296.76	-47.01	4.81	25.81	83.23	-
		-83.23	4.54	-2.32e-05	0.0	24.4	119.31	125.57	-47.01	4.81	15.17	90.61	
						48.9	119.31	-1045.63	-47.01	4.81	4.54	21.85	-
6	15	92.21	25.81	-8.81e-05	-2342.39	0.0	119.31	1296.76	-47.01	4.81	25.81	83.23	-
		-83.23	4.54	-2.32e-05	0.0	24.4	119.31	125.57	-47.01	4.81	15.17	90.61	
						48.9	119.31	-1045.63	-47.01	4.81	4.54	21.85	-
6	32	17.72	50.63	5.52e-04	-1374.39	0.0	181.07	907.57	-124.92	15.55	50.63	128.55	-
		-128.55	5.03	2.84e-04	0.0	24.4	181.07	220.37	-124.92	15.55	27.83	9.32	
						48.9	181.07	-466.82	-124.92	15.55	5.03	20.79	-
6	49	53.84	47.55	-3.38e-04	-1374.39	0.0	356.09	729.07	299.48	-79.63	-28.34	40.29	-
		-40.29	-28.34	-4.59e-06	0.0	24.4	356.09	41.87	299.48	-79.63	9.60	53.84	
						48.9	356.09	-645.32	299.48	-79.63	47.55	20.02	-
6	53	53.80	48.14	-3.53e-04	-1374.39	0.0	354.58	729.96	302.23	-79.50	-31.77	40.55	-
		-40.55	-31.77	1.17e-04	0.0	24.4	354.58	42.76	302.23	-79.50	8.18	53.80	
						48.9	354.58	-644.43	302.23	-79.50	48.14	19.82	-
6	54	40.32	85.84	-3.85e-04	-1374.39	0.0	-206.68	865.50	-163.63	7.27	85.84	93.05	-
		-93.05	-7.49	-1.32e-04	0.0	24.4	-206.68	178.30	-163.63	7.27	39.17	34.64	
						48.9	-206.68	-508.89	-163.63	7.27	-7.49	5.65	-
6	55	45.83	44.70	1.18e-04	-1374.39	0.0	391.42	748.35	268.85	-71.77	-24.80	53.53	-
		-53.53	-24.80	8.87e-05	0.0	24.4	391.42	61.16	268.85	-71.77	9.95	45.29	
						48.9	391.42	-626.04	268.85	-71.77	44.70	23.86	-
6	56	32.92	92.81	8.64e-05	-1374.39	0.0	-169.83	883.89	-197.01	15.00	92.81	106.03	-
		-106.03	-10.93	-1.61e-04	0.0	24.4	-169.83	196.70	-197.01	15.00	40.94	26.13	
						48.9	-169.83	-490.50	-197.01	15.00	-10.93	9.69	-
6	81	44.11	23.46	-2.06e-04	-1374.39	0.0	310.12	786.27	84.40	-20.60	-3.48	65.76	-
		-65.76	-3.48	-2.46e-05	0.0	24.4	310.12	99.08	84.40	-20.60	9.99	42.40	
						48.9	310.12	-588.12	84.40	-20.60	23.46	17.42	-
6	82	41.41	52.42	-2.23e-04	-1374.39	0.0	-8.12	832.62	-70.45	-3.04	52.42	81.83	-
		-81.83	3.52	-1.26e-04	0.0	24.4	-8.12	145.43	-70.45	-3.04	27.97	37.76	
						48.9	-8.12	-541.77	-70.45	-3.04	3.52	10.63	-
6	83	44.15	21.68	6.03e-06	-1374.39	0.0	302.33	781.49	80.20	-19.00	-5.53	64.40	-
		-64.40	-5.53	7.33e-05	0.0	24.4	302.33	94.30	80.20	-19.00	8.08	42.59	
						48.9	302.33	-592.90	80.20	-19.00	21.68	18.40	-
6	84	41.31	50.37	-1.10e-05	-1374.39	0.0	-15.91	827.85	-74.65	-1.44	50.37	80.47	-
		-80.47	1.74	-2.83e-05	0.0	24.4	-15.91	140.65	-74.65	-1.44	26.06		

Viale Duca Alessandro n. 11 – 43123 Parma
Cell. 335 1403156 – E mail ing.concari@gmail.com
Sito web: studioaire.it – P.IVA 02561480340

37.95														
							48.9	-15.91	-546.54	-74.65	-1.44	1.74	-	
11.61	6	86	41.42	50.91	-2.30e-04	-1374.39	0.0	-8.78	833.01	-69.25	-2.99	50.91	-	
81.94			-81.94	3.78	-7.27e-05	0.0	24.4	-8.78	145.82	-69.25	-2.99	27.34		
37.74														
							48.9	-8.78	-541.38	-69.25	-2.99	3.78	-	
10.55	6	87	44.16	21.42	1.24e-05	-1374.39	0.0	302.99	781.10	79.00	-19.06	-4.02	-	
64.29			-64.29	-4.02	1.99e-05	0.0	24.4	302.99	93.91	79.00	-19.06	8.70		
42.61														
							48.9	302.99	-593.29	79.00	-19.06	21.42	-	
18.48	6	92	41.69	24.55	-1.15e-04	-1374.39	0.0	147.58	810.17	7.18	-12.43	24.55	-	
74.81			-74.81	13.31	-2.68e-05	0.0	24.4	147.58	122.98	7.18	-12.43	18.93		
39.24														
							48.9	147.58	-564.22	7.18	-12.43	13.31	-	
14.69	6	93	76.76	23.55	-8.65e-05	-2019.72	0.0	127.95	1129.37	-32.78	1.41	23.55	-	
77.60			-77.60	6.28	-2.37e-05	0.0	24.4	127.95	119.51	-32.78	1.41	14.92		
75.04														
							48.9	127.95	-890.35	-32.78	1.41	6.28	-	
19.17	6	94	72.58	29.06	-1.18e-04	-2019.72	0.0	130.31	1144.95	-21.28	-5.63	29.06	-	
86.07			-86.07	9.82	-2.58e-05	0.0	24.4	130.31	135.09	-21.28	-5.63	19.44		
70.38														
							48.9	130.31	-874.77	-21.28	-5.63	9.82	-	
20.03	6	95	76.76	23.55	-8.65e-05	-2019.72	0.0	127.95	1129.37	-32.78	1.41	23.55	-	
77.60			-77.60	6.28	-2.37e-05	0.0	24.4	127.95	119.51	-32.78	1.41	14.92		
75.04														
							48.9	127.95	-890.35	-32.78	1.41	6.28	-	
19.17	6	96	72.58	29.06	-1.18e-04	-2019.72	0.0	130.31	1144.95	-21.28	-5.63	29.06	-	
86.07			-86.07	9.82	-2.58e-05	0.0	24.4	130.31	135.09	-21.28	-5.63	19.44		
70.38														
							48.9	130.31	-874.77	-21.28	-5.63	9.82	-	
20.03	6	105	52.05	19.94	-8.39e-05	-1503.46	0.0	141.76	861.55	-10.02	-4.03	19.94	-	
68.59			-68.59	9.07	-2.46e-05	0.0	24.4	141.76	109.83	-10.02	-4.03	14.51		
50.13														
							48.9	141.76	-641.90	-10.02	-4.03	9.07	-	
14.90	6	106	48.70	24.35	-1.09e-04	-1503.46	0.0	143.65	874.01	-0.82	-9.66	24.35	-	
75.37			-75.37	11.90	-2.62e-05	0.0	24.4	143.65	122.29	-0.82	-9.66	18.13		
46.40														
							48.9	143.65	-629.44	-0.82	-9.66	11.90	-	
15.58	6	107	52.05	19.94	-8.39e-05	-1503.46	0.0	141.76	861.55	-10.02	-4.03	19.94	-	
68.59			-68.59	9.07	-2.46e-05	0.0	24.4	141.76	109.83	-10.02	-4.03	14.51		
50.13														
							48.9	141.76	-641.90	-10.02	-4.03	9.07	-	
14.90	6	108	48.70	24.35	-1.09e-04	-1503.46	0.0	143.65	874.01	-0.82	-9.66	24.35	-	
75.37			-75.37	11.90	-2.62e-05	0.0	24.4	143.65	122.29	-0.82	-9.66	18.13		
46.40														
							48.9	143.65	-629.44	-0.82	-9.66	11.90	-	
15.58	6	112	42.11	24.00	-1.12e-04	-1374.39	0.0	147.34	808.62	6.03	-11.73	24.00	-	
73.96			-73.96	12.95	-2.66e-05	0.0	24.4	147.34	121.42	6.03	-11.73	18.48		
39.71														
							48.9	147.34	-565.77	6.03	-11.73	12.95	-	
14.60	6	113	45.88	19.04	-8.32e-05	-1374.39	0.0	145.21	794.60	-4.33	-5.39	19.04	-	
66.34			-66.34	9.77	-2.48e-05	0.0	24.4	145.21	107.41	-4.33	-5.39	14.40		
43.91														
							48.9	145.21	-579.79	-4.33	-5.39	9.77	-	
13.83	6	114	42.53	23.45	-1.09e-04	-1374.39	0.0	147.11	807.06	4.87	-11.02	23.45	-	
73.11			-73.11	12.60	-2.64e-05	0.0	24.4	147.11	119.86	4.87	-11.02	18.02		
40.18														
							48.9	147.11	-567.33	4.87	-11.02	12.60	-	
14.52	6	115	45.88	19.04	-8.32e-05	-1374.39	0.0	145.21	794.60	-4.33	-5.39	19.04	-	
66.34			-66.34	9.77	-2.48e-05	0.0	24.4	145.21	107.41	-4.33	-5.39	14.40		
43.91														
							48.9	145.21	-579.79	-4.33	-5.39	9.77	-	
13.83	6	116	42.53	23.45	-1.09e-04	-1374.39	0.0	147.11	807.06	4.87	-11.02	23.45	-	
73.11			-73.11	12.60	-2.64e-05	0.0	24.4	147.11	119.86	4.87	-11.02	18.02		
40.18														
							48.9	147.11	-567.33	4.87	-11.02	12.60	-	

Viale Duca Alessandro n. 11 – 43123 Parma
Cell. 335 1403156 – E mail ing.concari@gmail.com
Sito web: studioaire.it – P.IVA 02561480340

14.52													
7	2	61.44	-1.30	8.73e-04	-101.56	0.0	-16.61	-93.99	-25.55	15.49	-1.30		
61.44													
		-10.93	-3.20	-4.26e-05	0.0	25.0	-16.61	-144.77	-25.55	15.49	-2.25		
31.60													
						50.0	-16.61	-195.56	-25.55	15.49	-3.20	-	
10.93													
7	5	73.24	-3.65	7.95e-04	-101.56	0.0	-118.81	-98.67	-35.18	21.77	-3.65		
73.24													
		-1.47	-4.40	-3.64e-05	0.0	25.0	-118.81	-149.45	-35.18	21.77	-4.03		
42.23													
						50.0	-118.81	-200.23	-35.18	21.77	-4.40	-	
1.47													
7	8	78.17	-2.38	9.52e-04	-101.56	0.0	-65.48	-122.10	-37.31	22.33	-2.38		
78.17													
		-8.25	-4.74	-4.21e-05	0.0	25.0	-65.48	-172.88	-37.31	22.33	-3.56		
41.31													
						50.0	-65.48	-223.66	-37.31	22.33	-4.74	-	
8.25													
7	12	48.40	-0.70	7.08e-04	-78.12	0.0	-0.47	-77.71	-20.15	12.04	-0.70		
48.40													
		-9.97	-2.54	-3.41e-05	0.0	25.0	-0.47	-116.77	-20.15	12.04	-1.62		
24.10													
						50.0	-0.47	-155.83	-20.15	12.04	-2.54	-	
9.97													
7	41	29.42	-13.83	-6.96e-04	-78.12	0.0	-1671.53	90.79	30.40	2.65	-34.41	3.05	
		3.05	-34.41	-2.28e-04	0.0	25.0	-1671.53	51.73	30.40	2.65	-24.12		
21.11													
						50.0	-1671.53	12.66	30.40	2.65	-13.83		
29.42													
7	44	102.99	35.43	2.44e-03	-78.12	0.0	1794.86	-296.35	-71.57	21.70	35.43		
102.99													
		-65.19	8.45	1.63e-04	0.0	25.0	1794.86	-335.42	-71.57	21.70	21.94		
23.79													
						50.0	1794.86	-374.48	-71.57	21.70	8.45	-	
65.19													
7	73	25.15	-7.24	-1.59e-04	-78.12	0.0	-829.28	34.41	3.21	7.59	-17.41		
21.26													
		19.16	-17.41	-1.19e-04	0.0	25.0	-829.28	-4.65	3.21	7.59	-12.32		
25.09													
						50.0	-829.28	-43.72	3.21	7.59	-7.24		
19.16													
7	76	70.93	14.81	1.43e-03	-78.12	0.0	778.56	-167.96	-41.52	15.98	14.81		
70.93													
		-32.78	2.48	5.66e-05	0.0	25.0	778.56	-207.02	-41.52	15.98	8.64		
23.96													
						50.0	778.56	-246.08	-41.52	15.98	2.48	-	
32.78													
7	78	71.06	11.70	1.43e-03	-78.12	0.0	714.21	-161.07	-32.08	12.55	11.70		
71.06													
		-30.69	4.20	1.76e-05	0.0	25.0	714.21	-200.13	-32.08	12.55	7.95		
25.07													
						50.0	714.21	-239.19	-32.08	12.55	4.20	-	
30.69													
7	90	46.75	-1.13	6.56e-04	-78.13	0.0	-18.25	-69.90	-19.44	11.86	-1.13		
46.75													
		-7.71	-2.43	-3.22e-05	0.0	25.0	-18.25	-108.96	-19.44	11.86	-1.78		
24.40													
						50.0	-18.25	-148.02	-19.44	11.86	-2.43	-	
7.71													
7	92	46.75	-1.13	6.56e-04	-78.12	0.0	-18.25	-69.90	-19.44	11.86	-1.13		
46.75													
		-7.71	-2.43	-3.22e-05	0.0	25.0	-18.25	-108.96	-19.44	11.86	-1.78		
24.40													
						50.0	-18.25	-148.02	-19.44	11.86	-2.43	-	
7.71													
7	93	54.62	-2.70	6.03e-04	-78.13	0.0	-86.38	-73.02	-25.86	16.05	-2.70		
54.62													
		-1.41	-3.23	-2.80e-05	0.0	25.0	-86.38	-112.08	-25.86	16.05	-2.96		
31.49													
						50.0	-86.38	-151.14	-25.86	16.05	-3.23	-	
1.41													
7	96	57.91	-1.85	7.08e-04	-78.12	0.0	-50.82	-88.64	-27.27	16.42	-1.85		
57.91													
		-5.92	-3.46	-3.18e-05	0.0	25.0	-50.82	-127.70	-27.27	16.42	-2.65		
30.88													
						50.0	-50.82	-166.76	-27.27	16.42	-3.46	-	
5.92													
7	105	45.70	-2.12	5.62e-04	-78.13	0.0	-60.32	-58.03	-19.59	12.40	-2.12		
45.70													
		-2.84	-2.41	-2.83e-05	0.0	25.0	-60.32	-97.09	-19.59	12.40	-2.26		
26.31													
						50.0	-60.32	-136.15	-19.59	12.40	-2.41	-	
2.84													
7	108	48.33	-1.44	6.45e-04	-78.12	0.0	-31.87	-70.52	-20.72	12.70	-1.44		
48.33													
		-6.45	-2.59	-3.13e-05	0.0	25.0	-31.87	-109.58	-20.72	12.70	-2.01		
25.82													
						50.0	-31.87	-148.65	-20.72	12.70	-2.59	-	
6.45													
7	111	46.43	-1.21	6.45e-04	-78.12	0.0	-21.80	-68.34	-19.30	11.82	-1.21		
46.43													
		-7.26	-2.41	-3.18e-05	0.0	25.0	-21.80	-107.40	-19.30	11.82	-1.81		
24.46													
						50.0	-21.80	-146.46	-19.30	11.82	-2.41	-	
7.26													
7	112	46.43	-1.21	6.45e-04	-78.12	0.0	-21.80	-68.34	-19.30	11.82	-1.21		
46.43													

Viale Duca Alessandro n. 11 – 43123 Parma
Cell. 335 1403156 – E mail ing.concari@gmail.com
Sito web: studioaire.it – P.IVA 02561480340

		-7.26	-2.41	-3.18e-05	0.0	25.0	-21.80	-107.40	-19.30	11.82	-1.81			
24.46														
						50.0	-21.80	-146.46	-19.30	11.82	-2.41	-		
7.26														
7	113	43.46	-1.98	5.51e-04	-78.13	0.0	-53.80	-54.28	-18.02	11.49	-1.98			
43.46														
		-3.20	-2.20	-2.84e-05	0.0	25.0	-53.80	-93.34	-18.02	11.49	-2.09			
25.02														
						50.0	-53.80	-132.40	-18.02	11.49	-2.20	-		
3.20														
7	114	46.10	-1.30	6.35e-04	-78.12	0.0	-25.36	-66.77	-19.15	11.78	-1.30			
46.10														
		-6.81	-2.38	-3.14e-05	0.0	25.0	-25.36	-105.84	-19.15	11.78	-1.84			
24.53														
						50.0	-25.36	-144.90	-19.15	11.78	-2.38	-		
6.81														
7	116	46.10	-1.30	6.35e-04	-78.12	0.0	-25.36	-66.77	-19.15	11.78	-1.30			
46.10														
		-6.81	-2.38	-3.14e-05	0.0	25.0	-25.36	-105.84	-19.15	11.78	-1.84			
24.53														
						50.0	-25.36	-144.90	-19.15	11.78	-2.38	-		
6.81														
8	4	42.74	6.35	-1.40e-04	-1786.71	0.0	420.00	1104.14	191.95	-53.70	-25.36	-		
124.03														
		-124.03	-25.36	-3.26e-05	0.0	24.4	420.00	210.78	191.95	-53.70	-9.50			
36.69														
						48.9	420.00	-682.57	191.95	-53.70	6.35	-		
20.98														
8	5	95.23	14.52	-1.03e-04	-2754.71	0.0	324.65	1580.80	232.10	-62.59	-30.88	-		
126.43														
		-126.43	-30.88	-3.14e-05	0.0	24.4	324.65	203.45	232.10	-62.59	-8.18			
91.64														
						48.9	324.65	-1173.91	232.10	-62.59	14.52	-		
26.97														
8	6	87.44	11.97	-1.45e-04	-2754.71	0.0	399.73	1607.42	235.61	-64.69	-31.35	-		
141.54														
		-141.54	-31.35	-3.39e-05	0.0	24.4	399.73	230.07	235.61	-64.69	-9.69			
83.04														
						48.9	399.73	-1147.28	235.61	-64.69	11.97	-		
29.07														
8	7	95.23	14.52	-1.03e-04	-2754.71	0.0	324.65	1580.80	232.10	-62.59	-30.88	-		
126.43														
		-126.43	-30.88	-3.14e-05	0.0	24.4	324.65	203.45	232.10	-62.59	-8.18			
91.64														
						48.9	324.65	-1173.91	232.10	-62.59	14.52	-		
26.97														
8	8	87.44	11.97	-1.45e-04	-2754.71	0.0	399.73	1607.42	235.61	-64.69	-31.35	-		
141.54														
		-141.54	-31.35	-3.39e-05	0.0	24.4	399.73	230.07	235.61	-64.69	-9.69			
83.04														
						48.9	399.73	-1147.28	235.61	-64.69	11.97	-		
29.07														
8	13	83.87	12.47	-8.01e-05	-2342.39	0.0	245.06	1332.14	188.61	-50.68	-25.14	-		
101.30														
		-101.30	-25.14	-2.44e-05	0.0	24.4	245.06	160.95	188.61	-50.68	-6.33			
81.19														
						48.9	245.06	-1010.25	188.61	-50.68	12.47	-		
22.61														
8	39	17.66	12.40	6.15e-04	-1374.39	0.0	355.32	929.40	264.65	-62.98	-42.18	-		
143.15														
		-143.15	-42.18	-4.30e-05	0.0	24.4	355.32	242.21	264.65	-62.98	-14.89	5.30		
						48.9	355.32	-444.99	264.65	-62.98	12.40	-		
14.24														
8	50	35.93	38.82	-3.25e-04	-1374.39	0.0	623.81	807.41	-12.05	-30.07	38.82	-		
77.74														
		-77.74	-14.08	-2.53e-04	0.0	24.4	623.81	120.21	-12.05	-30.07	12.37			
33.80														
						48.9	623.81	-566.98	-12.05	-30.07	-14.08	-		
22.65														
8	51	28.89	21.34	9.61e-05	-1374.39	0.0	97.31	888.60	271.75	-47.61	-67.33	-		
113.68														
		-113.68	-67.33	2.09e-04	0.0	24.4	97.31	201.41	271.75	-47.61	-22.99			
21.37														
						48.9	97.31	-485.79	271.75	-47.61	21.34	-		
11.55														
8	53	32.58	17.09	-3.61e-04	-1374.39	0.0	86.40	872.15	229.09	-39.17	-59.85	-		
100.97														
		-100.97	-59.85	1.16e-04	0.0	24.4	86.40	184.96	229.09	-39.17	-21.38			
26.87														
						48.9	86.40	-502.24	229.09	-39.17	17.09	-		
13.27														
8	54	36.09	33.01	-3.38e-04	-1374.39	0.0	613.69	806.71	-4.67	-29.75	33.01	-		
77.48														
		-77.48	-13.18	-1.31e-04	0.0	24.4	613.69	119.52	-4.67	-29.75	9.92			
33.97														
						48.9	613.69	-567.68	-4.67	-29.75	-13.18	-		
22.56														
8	56	31.74	31.35	1.33e-04	-1374.39	0.0	634.72	823.86	30.61	-38.51	31.35	-		
90.46														
		-90.46	-9.83	-1.60e-04	0.0	24.4	634.72	136.66	30.61	-38.51	10.76			
28.30														
						48.9	634.72	-550.53	30.61	-38.51	-9.83	-		
20.92														
8	64	37.54	8.41	2.60e-04	-1374.39	0.0	307.45	826.19	150.49	-42.33	-18.31	-		
86.68														
		-86.68	-18.31	1.21e-04	0.0	24.4	307.45	138.99	150.49	-42.33	-4.95			
33.69														
						48.9	307.45	-548.20	150.49	-42.33	8.41	-		

Viale Duca Alessandro n. 11 – 43123 Parma
Cell. 335 1403156 – E mail ing.concari@gmail.com
Sito web: studioaire.it – P.IVA 02561480340

13.92
8 81 32.56 11.06 -2.11e-04 -1374.39 0.0 186.82 865.59 203.21 -43.95 -41.41 -
99.89
-99.89 -41.41 -2.07e-05 0.0 24.4 186.82 178.40 203.21 -43.95 -15.17
27.07
48.9 186.82 -508.80 203.21 -43.95 11.06 -
13.95
8 82 34.88 6.25 -1.97e-04 -1374.39 0.0 446.00 827.18 76.88 -36.05 6.25 -
85.60
-85.60 -3.11 -1.25e-04 0.0 24.4 446.00 139.99 76.88 -36.05 1.57
31.78
48.9 446.00 -547.21 76.88 -36.05 -3.11 -
18.81
8 83 34.16 14.09 1.91e-06 -1374.39 0.0 164.74 858.93 216.78 -45.57 -45.05 -
98.08
-98.08 -45.05 7.58e-05 0.0 24.4 164.74 171.73 216.78 -45.57 -15.48
28.71
48.9 164.74 -515.46 216.78 -45.57 14.09 -
12.48
8 92 33.59 5.15 -1.03e-04 -1374.39 0.0 315.38 846.61 147.30 -41.09 -19.46 -
93.85
-93.85 -19.46 -2.48e-05 0.0 24.4 315.38 159.41 147.30 -41.09 -7.16
29.10
48.9 315.38 -527.78 147.30 -41.09 5.15 -
15.92
8 93 68.53 10.59 -7.84e-05 -2019.72 0.0 251.81 1164.38 174.06 -47.02 -23.14 -
95.46
-95.46 -23.14 -2.40e-05 0.0 24.4 251.81 154.52 174.06 -47.02 -6.27
65.74
48.9 251.81 -855.34 174.06 -47.02 10.59 -
19.92
8 94 63.34 8.89 -1.07e-04 -2019.72 0.0 301.86 1182.13 176.40 -48.42 -23.45 -
105.53
-105.53 -23.45 -2.57e-05 0.0 24.4 301.86 172.27 176.40 -48.42 -7.28
60.00
48.9 301.86 -837.59 176.40 -48.42 8.89 -
21.31
8 95 68.53 10.59 -7.84e-05 -2019.72 0.0 251.81 1164.38 174.06 -47.02 -23.14 -
95.46
-95.46 -23.14 -2.40e-05 0.0 24.4 251.81 154.52 174.06 -47.02 -6.27
65.74
48.9 251.81 -855.34 174.06 -47.02 10.59 -
19.92
8 96 63.34 8.89 -1.07e-04 -2019.72 0.0 301.86 1182.13 176.40 -48.42 -23.45 -
105.53
-105.53 -23.45 -2.57e-05 0.0 24.4 301.86 172.27 176.40 -48.42 -7.28
60.00
48.9 301.86 -837.59 176.40 -48.42 8.89 -
21.31
8 105 44.09 7.60 -7.56e-05 -1503.46 0.0 262.62 895.96 150.78 -41.15 -19.94 -
86.12
-86.12 -19.94 -2.33e-05 0.0 24.4 262.62 144.23 150.78 -41.15 -6.17
41.02
48.9 262.62 -607.49 150.78 -41.15 7.60 -
15.60
8 106 40.37 6.24 -9.84e-05 -1503.46 0.0 302.66 910.16 152.65 -42.28 -20.20 -
94.18
-94.18 -20.20 -2.46e-05 0.0 24.4 302.66 158.43 152.65 -42.28 -6.98
36.43
48.9 302.66 -593.30 152.65 -42.28 6.24 -
16.72
8 107 44.09 7.60 -7.56e-05 -1503.46 0.0 262.62 895.96 150.78 -41.15 -19.94 -
86.12
-86.12 -19.94 -2.33e-05 0.0 24.4 262.62 144.23 150.78 -41.15 -6.17
41.02
48.9 262.62 -607.49 150.78 -41.15 7.60 -
15.60
8 108 40.37 6.24 -9.84e-05 -1503.46 0.0 302.66 910.16 152.65 -42.28 -20.20 -
94.18
-94.18 -20.20 -2.46e-05 0.0 24.4 302.66 158.43 152.65 -42.28 -6.98
36.43
48.9 302.66 -593.30 152.65 -42.28 6.24 -
16.72
8 112 34.06 5.32 -1.01e-04 -1374.39 0.0 310.37 844.83 147.06 -40.95 -19.43 -
92.85
-92.85 -19.43 -2.46e-05 0.0 24.4 310.37 157.64 147.06 -40.95 -7.05
29.68
48.9 310.37 -529.56 147.06 -40.95 5.32 -
15.78
8 113 38.24 6.85 -7.50e-05 -1374.39 0.0 265.33 828.86 144.96 -39.69 -19.15 -
83.78
-83.78 -19.15 -2.31e-05 0.0 24.4 265.33 141.66 144.96 -39.69 -6.15
34.84
48.9 265.33 -545.53 144.96 -39.69 6.85 -
14.53
8 114 34.52 5.49 -9.78e-05 -1374.39 0.0 305.37 843.06 146.83 -40.81 -19.40 -
91.84
-91.84 -19.40 -2.45e-05 0.0 24.4 305.37 155.86 146.83 -40.81 -6.95
30.25
48.9 305.37 -531.33 146.83 -40.81 5.49 -
15.64
8 115 38.24 6.85 -7.50e-05 -1374.39 0.0 265.33 828.86 144.96 -39.69 -19.15 -
83.78
-83.78 -19.15 -2.31e-05 0.0 24.4 265.33 141.66 144.96 -39.69 -6.15
34.84
48.9 265.33 -545.53 144.96 -39.69 6.85 -
14.53
8 116 34.52 5.49 -9.78e-05 -1374.39 0.0 305.37 843.06 146.83 -40.81 -19.40 -

Viale Duca Alessandro n. 11 – 43123 Parma
Cell. 335 1403156 – E mail ing.concari@gmail.com
Sito web: studioaire.it – P.IVA 02561480340

91.84														
			-91.84	-19.40	-2.45e-05	0.0	24.4	305.37	155.86	146.83	-40.81	-6.95		
30.25														
							48.9	305.37	-531.33	146.83	-40.81	5.49	-	
15.64														
	9	1	5.03	23.05	7.13e-04	-101.56	0.0	113.41	48.47	309.19	-83.81	-33.21	-	
0.74														
			-1.89	-33.21	-2.99e-05	0.0	25.0	113.41	-2.32	309.19	-83.81	-5.08	5.03	
							50.0	113.41	-53.10	309.19	-83.81	23.05	-	
1.89														
	9	4	4.61	27.76	8.69e-04	-101.56	0.0	60.40	49.12	384.32	-103.62	-42.55	-	
1.33														
			-2.15	-42.55	-3.31e-05	0.0	25.0	60.40	-1.66	384.32	-103.62	-7.40	4.61	
							50.0	60.40	-52.44	384.32	-103.62	27.76	-	
2.15														
	9	7	3.14	22.97	7.90e-04	-101.56	0.0	300.02	48.53	297.63	-80.79	-31.50	-	
2.65														
			-3.76	-31.50	-3.08e-05	0.0	25.0	300.02	-2.25	297.63	-80.79	-4.26	3.14	
							50.0	300.02	-53.03	297.63	-80.79	22.97	-	
3.76														
	9	8	2.72	27.68	9.45e-04	-101.56	0.0	247.00	49.19	372.76	-100.61	-40.84	-	
3.24														
			-4.02	-40.84	-3.40e-05	0.0	25.0	247.00	-1.59	372.76	-100.61	-6.58	2.72	
							50.0	247.00	-52.38	372.76	-100.61	27.68	-	
4.02														
	9	10	3.45	22.44	7.04e-04	-78.12	0.0	34.23	37.94	312.97	-84.28	-34.89	-	
1.16														
			-1.71	-34.89	-2.62e-05	0.0	25.0	34.23	-1.13	312.97	-84.28	-6.22	3.45	
							50.0	34.23	-40.19	312.97	-84.28	22.44	-	
1.71														
	9	33	8.48	30.94	2.34e-04	-78.12	0.0	-462.09	42.25	312.07	-96.71	-38.49	5.20	
			1.71	-38.49	-2.27e-05	0.0	25.0	-462.09	3.19	312.07	-96.71	-3.77	8.34	
							50.0	-462.09	-35.87	312.07	-96.71	30.94	1.71	
	9	36	-1.43	26.65	1.17e-03	-78.12	0.0	373.14	33.59	485.03	-117.20	-50.43	-	
7.58														
			-7.58	-50.43	-4.04e-05	0.0	25.0	373.14	-5.47	485.03	-117.20	-11.89	-	
1.51														
							50.0	373.14	-44.53	485.03	-117.20	26.65	-	
5.20														
	9	37	8.46	31.61	2.33e-04	-78.12	0.0	-482.28	42.25	311.29	-96.53	-37.47	5.19	
			1.69	-37.47	5.57e-05	0.0	25.0	-482.28	3.18	311.29	-96.53	-2.93	8.32	
							50.0	-482.28	-35.88	311.29	-96.53	31.61	1.69	
	9	40	-1.42	25.99	1.17e-03	-78.12	0.0	393.33	33.59	485.81	-117.38	-51.44	-	
7.56														
			-7.56	-51.44	-1.19e-04	0.0	25.0	393.33	-5.47	485.81	-117.38	-12.73	-	
1.49														
							50.0	393.33	-44.53	485.81	-117.38	25.99	-	
5.18														
	9	51	5.28	41.30	-6.94e-04	-78.12	0.0	-252.08	33.30	345.41	-97.36	-25.27	1.01	
			-0.21	-25.27	2.23e-04	0.0	25.0	-252.08	-5.76	345.41	-97.36	8.02	5.28	
							50.0	-252.08	-44.82	345.41	-97.36	41.30	-	
0.21														
	9	56	-1.44	2.81	2.44e-03	-78.12	0.0	543.22	40.75	320.52	-75.12	-46.15	-	
7.52														
			-7.52	-46.15	-1.88e-04	0.0	25.0	543.22	1.69	320.52	-75.12	-21.67	-	
1.51														
							50.0	543.22	-37.37	320.52	-75.12	2.81	-	
5.26														
	9	62	4.75	19.84	8.63e-04	-78.12	0.0	-53.14	40.64	291.94	-82.66	-38.15	0.58	
			-0.87	-38.15	-1.88e-04	0.0	25.0	-53.14	1.58	291.94	-82.66	-9.15	4.74	
							50.0	-53.14	-37.49	291.94	-82.66	19.84	-	
0.87														
	9	69	5.92	25.76	3.94e-04	-78.12	0.0	-186.80	39.43	294.81	-85.13	-33.45	2.02	
			-0.06	-33.45	9.87e-06	0.0	25.0	-186.80	0.37	294.81	-85.13	-3.84	5.86	
							50.0	-186.80	-38.69	294.81	-85.13	25.76	-	
0.06														
	9	72	1.43	14.72	8.69e-04	-78.12	0.0	304.73	35.83	261.01	-64.94	-27.60	-	
3.79														
			-3.79	-27.60	-5.92e-05	0.0	25.0	304.73	-3.23	261.01	-64.94	-6.44	1.43	
							50.0	304.73	-42.30	261.01	-64.94	14.72	-	
3.12														
	9	77	5.97	29.38	-1.59e-04	-78.12	0.0	-153.67	36.25	292.82	-83.88	-28.74	2.04	
			0.03	-28.74	-6.98e-05	0.0	25.0	-153.67	-2.81	292.82	-83.88	0.32	5.92	
							50.0	-153.67	-41.87	292.82	-83.88	29.38	0.03	
	9	80	1.37	11.10	1.42e-03	-78.12	0.0	271.60	39.01	263.00	-66.19	-32.32	-	
3.81														
			-3.81	-32.32	2.05e-05	0.0	25.0	271.60	-0.06	263.00	-66.19	-10.61	1.37	
							50.0	271.60	-39.12	263.00	-66.19	11.10	-	
3.21														
	9	85	5.95	30.35	-1.61e-04	-78.12	0.0	-183.16	36.25	291.71	-83.63	-27.29	2.02	
			3.95e-03	-27.29	4.49e-05	0.0	25.0	-183.16	-2.82	291.71	-83.63	1.53	5.90	
							50.0	-183.16	-41.88	291.71	-83.63	30.35		
3.95e-03														
	9	89	3.87	17.73	5.49e-04	-78.12	0.0	87.24	37.28	237.84	-64.47	-25.54	-	
0.57														
			-1.45	-25.54	-2.30e-05	0.0	25.0	87.24	-1.78	237.84	-64.47	-3.91	3.87	
							50.0	87.24	-40.84	237.84	-64.47	17.73	-	
1.45														
	9	90	3.59	20.87	6.52e-04	-78.12	0.0	51.90	37.72	287.93	-77.68	-31.77	-	
0.96														
			-1.63	-31.77	-2.51e-05	0.0	25.0	51.90	-1.34	287.93	-77.68	-5.45	3.59	
							50.0	51.90	-40.41	287.93	-77.68	20.87	-	
1.63														
	9	92	3.59	20.87	6.52e-04	-78.12	0.0	51.90	37.72	287.93	-77.68	-31.77	-	
0.96														
			-1.63	-31.77	-2.51e-05	0.0	25.0	51.90	-1.34	287.93	-77.68	-5.45	3.59	
							50.0	51.90	-40.41	287.93	-77.68	20.87	-	
1.63														

Viale Duca Alessandro n. 11 – 43123 Parma
Cell. 335 1403156 – E mail ing.concari@gmail.com
Sito web: studioaire.it – P.IVA 02561480340

	9	95	2.61	17.68	6.00e-04	-78.12	0.0	211.64	37.33	230.13	-62.46	-24.40	-	1.84
			-2.70	-24.40	-2.36e-05	0.0	25.0	211.64	-1.74	230.13	-62.46	-3.36	2.61	
							50.0	211.64	-40.80	230.13	-62.46	17.68	-	2.70
	9	96	2.33	20.82	7.03e-04	-78.12	0.0	176.30	37.76	280.22	-75.67	-30.63	-	2.24
			-2.87	-30.63	-2.57e-05	0.0	25.0	176.30	-1.30	280.22	-75.67	-4.91	2.33	
							50.0	176.30	-40.36	280.22	-75.67	20.82	-	2.87
	9	101	3.87	17.73	5.49e-04	-78.12	0.0	87.24	37.28	237.84	-64.47	-25.54	-	0.57
			-1.45	-25.54	-2.30e-05	0.0	25.0	87.24	-1.78	237.84	-64.47	-3.91	3.87	
							50.0	87.24	-40.84	237.84	-64.47	17.73	-	1.45
	9	107	3.62	17.72	5.59e-04	-78.12	0.0	112.12	37.29	236.30	-64.07	-25.32	-	0.83
			-1.70	-25.32	-2.31e-05	0.0	25.0	112.12	-1.77	236.30	-64.07	-3.80	3.62	
							50.0	112.12	-40.83	236.30	-64.07	17.72	-	1.70
	9	108	3.39	20.23	6.42e-04	-78.12	0.0	83.85	37.64	276.37	-74.63	-30.30	-	1.14
			-1.84	-30.30	-2.48e-05	0.0	25.0	83.85	-1.42	276.37	-74.63	-5.03	3.39	
							50.0	83.85	-40.49	276.37	-74.63	20.23	-	1.84
	9	111	3.62	20.56	6.42e-04	-78.12	0.0	55.43	37.67	282.92	-76.36	-31.15	-	0.93
			-1.61	-31.15	-2.49e-05	0.0	25.0	55.43	-1.39	282.92	-76.36	-5.30	3.62	
							50.0	55.43	-40.45	282.92	-76.36	20.56	-	1.61
	9	112	3.62	20.56	6.42e-04	-78.12	0.0	55.43	37.67	282.92	-76.36	-31.15	-	0.93
			-1.61	-31.15	-2.49e-05	0.0	25.0	55.43	-1.39	282.92	-76.36	-5.30	3.62	
							50.0	55.43	-40.45	282.92	-76.36	20.56	-	1.61
	9	113	3.87	17.73	5.49e-04	-78.12	0.0	87.24	37.28	237.84	-64.47	-25.54	-	0.57
			-1.45	-25.54	-2.30e-05	0.0	25.0	87.24	-1.78	237.84	-64.47	-3.91	3.87	
							50.0	87.24	-40.84	237.84	-64.47	17.73	-	1.45
	9	114	3.64	20.24	6.32e-04	-78.12	0.0	58.97	37.63	277.91	-75.04	-30.53	-	0.89
			-1.59	-30.53	-2.47e-05	0.0	25.0	58.97	-1.43	277.91	-75.04	-5.14	3.64	
							50.0	58.97	-40.49	277.91	-75.04	20.24	-	1.59
	9	115	3.87	17.73	5.49e-04	-78.12	0.0	87.24	37.28	237.84	-64.47	-25.54	-	0.57
			-1.45	-25.54	-2.30e-05	0.0	25.0	87.24	-1.78	237.84	-64.47	-3.91	3.87	
							50.0	87.24	-40.84	237.84	-64.47	17.73	-	1.45
	9	116	3.64	20.24	6.32e-04	-78.12	0.0	58.97	37.63	277.91	-75.04	-30.53	-	0.89
			-1.59	-30.53	-2.47e-05	0.0	25.0	58.97	-1.43	277.91	-75.04	-5.14	3.64	
							50.0	58.97	-40.49	277.91	-75.04	20.24	-	1.59
	10	2	91.87	14.52	-1.55e-04	-1786.71	0.0	-693.77	901.37	176.00	-53.10	-7.23	-	19.27
			-19.27	-7.23	-3.15e-05	0.0	24.4	-693.77	8.01	176.00	-53.10	3.64		91.87
							48.9	-693.77	-885.34	176.00	-53.10	14.52	-	15.36
	10	4	91.87	14.52	-1.55e-04	-1786.71	0.0	-693.77	901.37	176.00	-53.10	-7.23	-	19.27
			-19.27	-7.23	-3.15e-05	0.0	24.4	-693.77	8.01	176.00	-53.10	3.64		91.87
							48.9	-693.77	-885.34	176.00	-53.10	14.52	-	15.36
	10	5	142.48	4.05	-1.10e-04	-2754.71	0.0	-707.84	1377.92	78.47	-24.84	-2.83	-	26.00
			-26.00	-2.83	-2.82e-05	0.0	24.4	-707.84	0.57	78.47	-24.84	0.61		142.48
							48.9	-707.84	-1376.79	78.47	-24.84	4.05	-	25.72
	10	8	141.97	9.60	-1.58e-04	-2754.71	0.0	-865.54	1381.10	142.50	-43.13	-6.97	-	27.29
			-27.29	-6.97	-3.05e-05	0.0	24.4	-865.54	3.75	142.50	-43.13	1.31		141.97
							48.9	-865.54	-1373.60	142.50	-43.13	9.60	-	25.46
	10	9	71.06	6.91	-8.22e-05	-1374.39	0.0	-412.36	690.91	86.13	-26.78	-2.38	-	13.83
			-13.83	-2.38	-2.24e-05	0.0	24.4	-412.36	3.72	86.13	-26.78	2.26		71.06
							48.9	-412.36	-683.48	86.13	-26.78	6.91	-	12.02
	10	39	63.96	14.70	6.11e-04	-1374.39	0.0	-341.66	695.99	154.20	-48.35	0.40	-	25.71
			-25.71	0.40	-4.19e-05	0.0	24.4	-341.66	8.79	154.20	-48.35	7.55		63.96
							48.9	-341.66	-678.40	154.20	-48.35	14.70	-	14.35
	10	50	77.97	-11.72	-3.69e-04	-1374.39	0.0	-1493.76	689.25	131.94	-29.26	-26.53	-	5.85
			-6.19	-26.53	-2.54e-04	0.0	24.4	-1493.76	2.05	131.94	-29.26	-19.12		77.97
							48.9	-1493.76	-685.14	131.94	-29.26	-11.72	-	6.19
	10	51	63.88	46.66	1.04e-04	-1374.39	0.0	77.49	699.03	321.82	-102.11	-3.55	-	

Viale Duca Alessandro n. 11 – 43123 Parma
Cell. 335 1403156 – E mail ing.concari@gmail.com
Sito web: studioaire.it – P.IVA 02561480340

23.68														
			-23.68	-3.55	2.17e-04	0.0	24.4	77.49	11.83	321.82	-102.11	21.56		
63.88														
							48.9	77.49	-675.36	321.82	-102.11	46.66	-	
16.55	10	52	75.80	-14.95	7.31e-05	-1374.39	0.0	-1451.01	688.17	112.66	-22.72	-27.90	-	
9.51														
			-9.51	-27.90	-3.84e-05	0.0	24.4	-1451.01	0.98	112.66	-22.72	-21.42		
75.80														
							48.9	-1451.01	-686.21	112.66	-22.72	-14.95	-	
6.87	10	53	66.13	50.62	-3.53e-04	-1374.39	0.0	47.95	700.48	336.89	-107.57	-2.60	-	
19.82														
			-19.82	-2.60	1.23e-04	0.0	24.4	47.95	13.28	336.89	-107.57	24.01		
66.13														
							48.9	47.95	-673.91	336.89	-107.57	50.62	-	
15.90	10	54	78.06	-10.99	-3.83e-04	-1374.39	0.0	-1480.55	689.62	127.73	-28.17	-26.95	-	
5.65														
			-6.22	-26.95	-1.32e-04	0.0	24.4	-1480.55	2.43	127.73	-28.17	-18.97		
78.06														
							48.9	-1480.55	-684.77	127.73	-28.17	-10.99	-	
6.22	10	82	74.00	0.38	-2.22e-04	-1374.39	0.0	-936.37	691.04	125.51	-33.33	-14.24	-	
10.63														
			-10.63	-14.24	-1.25e-04	0.0	24.4	-936.37	3.84	125.51	-33.33	-6.93		
74.00														
							48.9	-936.37	-683.35	125.51	-33.33	0.38	-	
9.35	10	83	67.59	19.35	6.56e-06	-1374.39	0.0	-56.56	694.18	115.05	-39.73	5.06	-	
18.41														
			-18.41	5.06	7.75e-05	0.0	24.4	-56.56	6.99	115.05	-39.73	12.21		
67.59														
							48.9	-56.56	-680.21	115.05	-39.73	19.35	-	
14.40	10	84	73.37	-1.37	-9.87e-06	-1374.39	0.0	-906.33	689.29	120.32	-30.91	-16.40	-	
11.62														
			-11.62	-16.40	-2.69e-05	0.0	24.4	-906.33	2.09	120.32	-30.91	-8.89		
73.37														
							48.9	-906.33	-685.10	120.32	-30.91	-1.37	-	
9.63	10	85	68.25	21.41	-2.12e-04	-1374.39	0.0	-80.93	696.09	118.39	-41.68	7.04	-	
17.34														
			-17.34	7.04	3.31e-05	0.0	24.4	-80.93	8.90	118.39	-41.68	14.23		
68.25														
							48.9	-80.93	-678.30	118.39	-41.68	21.41	-	
14.13	10	86	74.03	0.70	-2.29e-04	-1374.39	0.0	-930.70	691.20	123.67	-32.85	-14.42	-	
10.55														
			-10.55	-14.42	-7.12e-05	0.0	24.4	-930.70	4.01	123.67	-32.85	-6.86		
74.03														
							48.9	-930.70	-683.19	123.67	-32.85	0.70	-	
9.36	10	87	67.55	19.03	1.30e-05	-1374.39	0.0	-62.23	694.02	116.89	-40.21	5.25	-	
18.49														
			-18.49	5.25	2.39e-05	0.0	24.4	-62.23	6.82	116.89	-40.21	12.14		
67.55														
							48.9	-62.23	-680.37	116.89	-40.21	19.03	-	
14.39	10	89	71.06	6.91	-8.22e-05	-1374.39	0.0	-412.36	690.91	86.13	-26.78	-2.38	-	
13.83														
			-13.83	-2.38	-2.24e-05	0.0	24.4	-412.36	3.72	86.13	-26.78	2.26		
71.06														
							48.9	-412.36	-683.48	86.13	-26.78	6.91	-	
12.02	10	90	70.72	10.60	-1.14e-04	-1374.39	0.0	-517.49	693.03	128.82	-38.97	-5.14	-	
14.69														
			-14.69	-5.14	-2.40e-05	0.0	24.4	-517.49	5.84	128.82	-38.97	2.73		
70.72														
							48.9	-517.49	-681.36	128.82	-38.97	10.60	-	
11.84	10	92	70.72	10.60	-1.14e-04	-1374.39	0.0	-517.49	693.03	128.82	-38.97	-5.14	-	
14.69														
			-14.69	-5.14	-2.40e-05	0.0	24.4	-517.49	5.84	128.82	-38.97	2.73		
70.72														
							48.9	-517.49	-681.36	128.82	-38.97	10.60	-	
11.84	10	93	104.46	3.62	-8.45e-05	-2019.72	0.0	-526.87	1010.73	63.79	-20.13	-2.21	-	
19.18														
			-19.18	-2.21	-2.18e-05	0.0	24.4	-526.87	0.87	63.79	-20.13	0.71		
104.46														
							48.9	-526.87	-1008.99	63.79	-20.13	3.62	-	
18.75	10	96	104.12	7.32	-1.17e-04	-2019.72	0.0	-632.01	1012.86	106.48	-32.32	-4.96	-	
20.04														
			-20.04	-4.96	-2.33e-05	0.0	24.4	-632.01	2.99	106.48	-32.32	1.18		
104.12														
							48.9	-632.01	-1006.87	106.48	-32.32	7.32	-	
18.57	10	101	71.06	6.91	-8.22e-05	-1374.39	0.0	-412.36	690.91	86.13	-26.78	-2.38	-	
13.83														
			-13.83	-2.38	-2.24e-05	0.0	24.4	-412.36	3.72	86.13	-26.78	2.26		
71.06														
							48.9	-412.36	-683.48	86.13	-26.78	6.91	-	
12.02	10	105	77.74	6.25	-8.27e-05	-1503.46	0.0	-435.26	754.88	81.66	-25.45	-2.35	-	
14.90														
			-14.90	-2.35	-2.23e-05	0.0	24.4	-435.26	3.15	81.66	-25.45	1.95		

Viale Duca Alessandro n. 11 – 43123 Parma
Cell. 335 1403156 – E mail ing.concari@gmail.com
Sito web: studioaire.it – P.IVA 02561480340

													77.74
						48.9	-435.26	-748.58	81.66	-25.45	6.25	-	13.36
10	108	77.47	9.21	-1.08e-04	-1503.46	0.0	-519.37	756.57	115.81	-35.20	-4.55	-	15.59
		-15.59	-4.55	-2.35e-05	0.0	24.4	-519.37	4.85	115.81	-35.20	2.33		
						48.9	-519.37	-746.88	115.81	-35.20	9.21	-	77.47 13.22
10	111	70.76	10.23	-1.11e-04	-1374.39	0.0	-506.98	692.82	124.55	-37.75	-4.86	-	14.61
		-14.61	-4.86	-2.38e-05	0.0	24.4	-506.98	5.63	124.55	-37.75	2.68		
						48.9	-506.98	-681.57	124.55	-37.75	10.23	-	70.76 11.86
10	112	70.76	10.23	-1.11e-04	-1374.39	0.0	-506.98	692.82	124.55	-37.75	-4.86	-	14.61
		-14.61	-4.86	-2.38e-05	0.0	24.4	-506.98	5.63	124.55	-37.75	2.68		
						48.9	-506.98	-681.57	124.55	-37.75	10.23	-	70.76 11.86
10	113	71.06	6.91	-8.22e-05	-1374.39	0.0	-412.36	690.91	86.13	-26.78	-2.38	-	13.83
		-13.83	-2.38	-2.24e-05	0.0	24.4	-412.36	3.72	86.13	-26.78	2.26		
						48.9	-412.36	-683.48	86.13	-26.78	6.91	-	71.06 12.02
10	114	70.79	9.86	-1.08e-04	-1374.39	0.0	-496.46	692.61	120.28	-36.53	-4.59	-	14.52
		-14.52	-4.59	-2.37e-05	0.0	24.4	-496.46	5.41	120.28	-36.53	2.64		
						48.9	-496.46	-681.78	120.28	-36.53	9.86	-	70.79 11.88
10	116	70.79	9.86	-1.08e-04	-1374.39	0.0	-496.46	692.61	120.28	-36.53	-4.59	-	14.52
		-14.52	-4.59	-2.37e-05	0.0	24.4	-496.46	5.41	120.28	-36.53	2.64		
						48.9	-496.46	-681.78	120.28	-36.53	9.86	-	70.79 11.88
11	1	0.93	0.12	7.15e-04	-101.56	0.0	595.74	45.33	8.42	-2.04	-0.88	-	4.13
		-6.84	-0.88	-3.68e-05	0.0	25.0	595.74	-5.46	8.42	-2.04	-0.38	0.86	
						50.0	595.74	-56.24	8.42	-2.04	0.12	-	6.84
11	2	-8.21	-0.07	8.70e-04	-101.56	0.0	981.48	33.06	8.68	-1.92	-1.31	-	10.90
		-19.75	-1.31	-4.25e-05	0.0	25.0	981.48	-17.72	8.68	-1.92	-0.69	-	8.98
						50.0	981.48	-68.51	8.68	-1.92	-0.07	-	19.75
11	4	-8.21	-0.07	8.70e-04	-101.56	0.0	981.48	33.06	8.68	-1.92	-1.31	-	10.90
		-19.75	-1.31	-4.25e-05	0.0	25.0	981.48	-17.72	8.68	-1.92	-0.69	-	8.98
						50.0	981.48	-68.51	8.68	-1.92	-0.07	-	19.75
11	7	5.62	-0.33	7.93e-04	-101.56	0.0	524.76	53.63	6.92	-1.41	-0.96	-	1.44
		-1.44	-0.96	-3.62e-05	0.0	25.0	524.76	2.85	6.92	-1.41	-0.64	5.62	
						50.0	524.76	-47.93	6.92	-1.41	-0.33	-	4.23e-03
11	8	-4.02	-0.52	9.48e-04	-101.56	0.0	910.50	41.36	7.18	-1.28	-1.39	-	8.21
		-12.91	-1.39	-4.20e-05	0.0	25.0	910.50	-9.42	7.18	-1.28	-0.96	-	4.21
						50.0	910.50	-60.20	7.18	-1.28	-0.52	-	12.91
11	13	5.48	-0.36	6.28e-04	-78.12	0.0	387.28	43.17	4.98	-0.93	-0.75	-	0.49
		-0.49	-0.75	-2.78e-05	0.0	25.0	387.28	4.11	4.98	-0.93	-0.56	5.43	
						50.0	387.28	-34.96	4.98	-0.93	-0.36	1.58	
11	25	34.43	6.36	2.36e-04	-78.12	0.0	-850.79	76.80	49.48	-25.06	-15.87		16.02
		16.02	-15.87	-3.90e-04	0.0	25.0	-850.79	37.73	49.48	-25.06	-4.75		30.11
						50.0	-850.79	-1.33	49.48	-25.06	6.36		34.43
11	28	-34.37	13.67	1.17e-03	-78.12	0.0	2495.00	-29.43	-37.91	22.67	13.67	-	34.37
		-68.13	-6.93	3.06e-04	0.0	25.0	2495.00	-68.49	-37.91	22.67	3.37	-	46.37
						50.0	2495.00	-107.55	-37.91	22.67	-6.93	-	68.13
11	41	49.49	-1.95	-6.92e-04	-78.12	0.0	-1934.03	79.73	29.52	-10.63	-13.73		29.42
		29.42	-13.73	-2.29e-04	0.0	25.0	-1934.03	40.67	29.52	-10.63	-7.84		44.34
						50.0	-1934.03	1.60	29.52	-10.63	-1.95		49.49
11	44	-65.13	10.57	2.43e-03	-78.12	0.0	4478.75	-62.56	-13.61	7.49	10.57	-	65.13
		-115.64	1.74	1.64e-04	0.0	25.0	4478.75	-101.63	-13.61	7.49	6.15	-	85.50
						50.0	4478.75	-140.69	-13.61	7.49	1.74	-	115.64
11	57	15.78	2.81	3.96e-04	-78.12	0.0	-165.40	55.03	25.03	-11.84	-7.31	6.24	
		6.24	-7.31	-1.89e-04	0.0	25.0	-165.40	15.97	25.03	-11.84	-2.25		15.01

Viale Duca Alessandro n. 11 – 43123 Parma
Cell. 335 1403156 – E mail ing.concari@gmail.com
Sito web: studioaire.it – P.IVA 02561480340

						50.0	-165.40	-23.09	25.03	-11.84	2.81		
14.01													
11	60	-19.81	5.50	8.68e-04	-78.12	0.0	1493.38	1.61	-11.81	8.83	5.50	-	
19.81													
		-38.30	-2.83	1.26e-04	0.0	25.0	1493.38	-37.45	-11.81	8.83	1.34	-	
24.17													
						50.0	1493.38	-76.51	-11.81	8.83	-2.83	-	
38.30													
11	73	34.24	-0.86	-1.56e-04	-78.12	0.0	-1024.29	68.87	15.15	-5.38	-5.96		
19.17													
		19.17	-5.96	-1.20e-04	0.0	25.0	-1024.29	29.81	15.15	-5.38	-3.41		
31.44													
						50.0	-1024.29	-9.25	15.15	-5.38	-0.86		
33.95													
11	76	-32.74	4.15	1.42e-03	-78.12	0.0	2352.26	-12.23	-1.93	2.37	4.15	-	
32.74													
		-58.24	0.84	5.72e-05	0.0	25.0	2352.26	-51.29	-1.93	2.37	2.50	-	
40.61													
						50.0	2352.26	-90.35	-1.93	2.37	0.84	-	
58.24													
11	89	0.72	0.09	5.50e-04	-78.12	0.0	458.26	34.87	6.47	-1.57	-0.67	-	
3.18													
		-5.26	-0.67	-2.83e-05	0.0	25.0	458.26	-4.20	6.47	-1.57	-0.29	0.66	
						50.0	458.26	-43.26	6.47	-1.57	0.09	-	
5.26													
11	90	-5.42	-0.03	6.53e-04	-78.12	0.0	715.42	26.69	6.65	-1.49	-0.96	-	
7.69													
		-13.87	-0.96	-3.21e-05	0.0	25.0	715.42	-12.38	6.65	-1.49	-0.50	-	
5.90													
						50.0	715.42	-51.44	6.65	-1.49	-0.03	-	
13.87													
11	92	-5.42	-0.03	6.53e-04	-78.12	0.0	715.42	26.69	6.65	-1.49	-0.96	-	
7.69													
		-13.87	-0.96	-3.21e-05	0.0	25.0	715.42	-12.38	6.65	-1.49	-0.50	-	
5.90													
						50.0	715.42	-51.44	6.65	-1.49	-0.03	-	
13.87													
11	93	3.84	-0.21	6.02e-04	-78.12	0.0	410.94	40.40	5.48	-1.15	-0.73	-	
1.38													
		-1.38	-0.73	-2.79e-05	0.0	25.0	410.94	1.34	5.48	-1.15	-0.47	3.84	
						50.0	410.94	-37.72	5.48	-1.15	-0.21	-	
0.70													
11	95	3.84	-0.21	6.02e-04	-78.12	0.0	410.94	40.40	5.48	-1.15	-0.73	-	
1.38													
		-1.38	-0.73	-2.79e-05	0.0	25.0	410.94	1.34	5.48	-1.15	-0.47	3.84	
						50.0	410.94	-37.72	5.48	-1.15	-0.21	-	
0.70													
11	96	-2.58	-0.34	7.05e-04	-78.12	0.0	668.10	32.22	5.65	-1.06	-1.02	-	
5.90													
		-9.31	-1.02	-3.18e-05	0.0	25.0	668.10	-6.84	5.65	-1.06	-0.68	-	
2.72													
						50.0	668.10	-45.90	5.65	-1.06	-0.34	-	
9.31													
11	101	0.72	0.09	5.50e-04	-78.12	0.0	458.26	34.87	6.47	-1.57	-0.67	-	
3.18													
		-5.26	-0.67	-2.83e-05	0.0	25.0	458.26	-4.20	6.47	-1.57	-0.29	0.66	
						50.0	458.26	-43.26	6.47	-1.57	0.09	-	
5.26													
11	105	1.32	0.03	5.60e-04	-78.12	0.0	448.80	35.97	6.27	-1.49	-0.68	-	
2.82													
		-4.35	-0.68	-2.82e-05	0.0	25.0	448.80	-3.09	6.27	-1.49	-0.33	1.30	
						50.0	448.80	-42.15	6.27	-1.49	0.03	-	
4.35													
11	107	1.32	0.03	5.60e-04	-78.12	0.0	448.80	35.97	6.27	-1.49	-0.68	-	
2.82													
		-4.35	-0.68	-2.82e-05	0.0	25.0	448.80	-3.09	6.27	-1.49	-0.33	1.30	
						50.0	448.80	-42.15	6.27	-1.49	0.03	-	
4.35													
11	111	-4.82	-0.02	6.43e-04	-78.12	0.0	689.70	27.50	6.63	-1.50	-0.94	-	
7.24													
		-13.01	-0.94	-3.18e-05	0.0	25.0	689.70	-11.56	6.63	-1.50	-0.48	-	
5.24													
						50.0	689.70	-50.62	6.63	-1.50	-0.02	-	
13.01													
11	112	-4.82	-0.02	6.43e-04	-78.12	0.0	689.70	27.50	6.63	-1.50	-0.94	-	
7.24													
		-13.01	-0.94	-3.18e-05	0.0	25.0	689.70	-11.56	6.63	-1.50	-0.48	-	
5.24													
						50.0	689.70	-50.62	6.63	-1.50	-0.02	-	
13.01													
11	113	0.72	0.09	5.50e-04	-78.12	0.0	458.26	34.87	6.47	-1.57	-0.67	-	
3.18													
		-5.26	-0.67	-2.83e-05	0.0	25.0	458.26	-4.20	6.47	-1.57	-0.29	0.66	
						50.0	458.26	-43.26	6.47	-1.57	0.09	-	
5.26													
11	114	-4.22	-9.51e-03	6.32e-04	-78.12	0.0	663.99	28.32	6.61	-1.50	-0.91	-	
6.79													
		-12.15	-0.91	-3.14e-05	0.0	25.0	663.99	-10.74	6.61	-1.50	-0.46	-	
4.58													
						50.0	663.99	-49.80	6.61	-1.50	-9.51e-03	-	
12.15													
11	115	0.72	0.09	5.50e-04	-78.12	0.0	458.26	34.87	6.47	-1.57	-0.67	-	
3.18													
		-5.26	-0.67	-2.83e-05	0.0	25.0	458.26	-4.20	6.47	-1.57	-0.29	0.66	
						50.0	458.26	-43.26	6.47	-1.57	0.09	-	
5.26													
11	116	-4.22	-9.51e-03	6.32e-04	-78.12	0.0	663.99	28.32	6.61	-1.50	-0.91	-	
6.79													

Viale Duca Alessandro n. 11 – 43123 Parma
Cell. 335 1403156 – E mail ing.concari@gmail.com
Sito web: studioaire.it – P.IVA 02561480340

			-12.15	-0.91	-3.14e-05	0.0	25.0	663.99	-10.74	6.61	-1.50	-0.46	-
4.58													
							50.0	663.99	-49.80	6.61	-1.50	-9.51e-03	-
12.15													
	12	5	141.58	18.01	-9.98e-05	-2754.71	0.0	-289.06	1378.20	193.95	-51.93	-19.29	-
26.98													
			-26.98	-19.29	-3.26e-05	0.0	24.4	-289.06	0.85	193.95	-51.93	-0.64	
141.58													
							48.9	-289.06	-1376.50	193.95	-51.93	18.01	-
26.56													
	12	6	140.21	18.89	-1.43e-04	-2754.71	0.0	-226.10	1381.20	198.54	-50.65	-22.30	-
29.07													
			-29.07	-22.30	-3.59e-05	0.0	24.4	-226.10	3.85	198.54	-50.65	-1.71	
140.21													
							48.9	-226.10	-1373.50	198.54	-50.65	18.89	-
27.19													
	12	7	141.58	18.01	-9.98e-05	-2754.71	0.0	-289.06	1378.20	193.95	-51.93	-19.29	-
26.98													
			-26.98	-19.29	-3.26e-05	0.0	24.4	-289.06	0.85	193.95	-51.93	-0.64	
141.58													
							48.9	-289.06	-1376.50	193.95	-51.93	18.01	-
26.56													
	12	8	140.21	18.88	-1.43e-04	-2754.71	0.0	-226.10	1381.20	198.54	-50.65	-22.30	-
29.07													
			-29.07	-22.30	-3.59e-05	0.0	24.4	-226.10	3.85	198.54	-50.65	-1.71	
140.21													
							48.9	-226.10	-1373.50	198.54	-50.65	18.88	-
27.19													
	12	10	69.04	12.65	-1.17e-04	-1374.39	0.0	-30.73	694.03	129.40	-30.11	-17.55	-
16.62													
			-16.62	-17.55	-2.79e-05	0.0	24.4	-30.73	6.84	129.40	-30.11	-2.45	
69.04													
							48.9	-30.73	-680.36	129.40	-30.11	12.65	-
13.28													
	12	30	66.36	7.49	-9.02e-04	-1374.39	0.0	84.36	702.40	163.92	-27.60	-37.33	-
22.78													
			-22.78	-37.33	-4.31e-04	0.0	24.4	84.36	15.20	163.92	-27.60	-14.92	
66.36													
							48.9	84.36	-671.99	163.92	-27.60	7.49	-
12.47													
	12	35	69.69	21.63	6.13e-04	-1374.39	0.0	-213.02	692.96	149.21	-40.79	-19.73	-
14.31													
			-14.31	-19.73	-1.20e-04	0.0	24.4	-213.02	5.77	149.21	-40.79	0.95	
69.69													
							48.9	-213.02	-681.43	149.21	-40.79	21.63	-
14.30													
	12	49	71.87	11.64	-3.47e-04	-1374.39	0.0	-662.81	690.08	55.75	-14.94	9.52	-
13.37													
			-13.37	9.52	-5.78e-06	0.0	24.4	-662.81	2.88	55.75	-14.94	10.58	
71.87													
							48.9	-662.81	-684.31	55.75	-14.94	11.64	-
10.86													
	12	50	64.74	8.43	-3.24e-04	-1374.39	0.0	747.83	699.76	184.33	-35.73	-46.87	-
22.65													
			-22.65	-46.87	-2.58e-04	0.0	24.4	747.83	12.56	184.33	-35.73	-19.22	
64.74													
							48.9	747.83	-674.63	184.33	-35.73	8.43	-
15.85													
	12	51	72.29	15.43	9.66e-05	-1374.39	0.0	-621.44	687.94	55.27	-19.12	13.81	-
11.55													
			-11.85	13.81	2.09e-04	0.0	24.4	-621.44	0.74	55.27	-19.12	14.62	
72.29													
							48.9	-621.44	-686.45	55.27	-19.12	15.43	-
11.85													
	12	52	65.15	12.23	1.19e-04	-1374.39	0.0	789.20	697.61	183.85	-39.92	-42.58	-
20.83													
			-20.83	-42.58	-4.30e-05	0.0	24.4	789.20	10.42	183.85	-39.92	-15.18	
65.15													
							48.9	789.20	-676.77	183.85	-39.92	12.23	-
16.85													
	12	62	68.20	10.15	-4.51e-04	-1374.39	0.0	3.04	696.98	143.35	-29.35	-25.44	-
18.84													
			-18.84	-25.44	-2.04e-04	0.0	24.4	3.04	9.79	143.35	-29.35	-7.65	
68.20													
							48.9	3.04	-677.41	143.35	-29.35	10.15	-
12.75													
	12	67	71.07	14.58	2.75e-04	-1374.39	0.0	-128.22	688.54	122.22	-34.51	-12.78	-
12.62													
			-13.23	-12.78	-5.99e-05	0.0	24.4	-128.22	1.34	122.22	-34.51	0.90	
71.07													
							48.9	-128.22	-685.85	122.22	-34.51	14.58	-
13.23													
	12	81	71.36	12.90	-2.11e-04	-1374.39	0.0	-446.11	691.62	107.83	-27.14	-6.10	-
13.96													
			-13.96	-6.10	-2.17e-05	0.0	24.4	-446.11	4.42	107.83	-27.14	3.40	
71.36													
							48.9	-446.11	-682.77	107.83	-27.14	12.90	-
11.30													
	12	82	67.45	10.54	-1.97e-04	-1374.39	0.0	296.91	695.87	152.33	-32.95	-29.65	-
18.81													
			-18.81	-29.65	-1.28e-04	0.0	24.4	296.91	8.68	152.33	-32.95	-9.55	
67.45													
							48.9	296.91	-678.51	152.33	-32.95	10.54	-
14.27													
	12	83	71.89	13.95	2.82e-06	-1374.39	0.0	-417.13	689.39	102.17	-28.48	-2.64	-
12.48													
			-12.48	-2.64	7.53e-05	0.0	24.4	-417.13	2.19	102.17	-28.48	5.65	
71.89													

Viale Duca Alessandro n. 11 – 43123 Parma
Cell. 335 1403156 – E mail ing.concari@gmail.com
Sito web: studioaire.it – P.IVA 02561480340

							48.9	-417.13	-685.00	102.17	-28.48	13.95	-
11.71													
	12	84	67.98	11.59	1.65e-05	-1374.39	0.0	325.89	693.65	146.68	-34.29	-26.19	-
17.34													
			-17.34	-26.19	-3.10e-05	0.0	24.4	325.89	6.45	146.68	-34.29	-7.30	
67.98													
							48.9	325.89	-680.74	146.68	-34.29	11.59	-
14.68													
	12	90	69.49	12.36	-1.03e-04	-1374.39	0.0	-51.72	693.03	127.87	-30.54	-16.54	-
15.93													
			-15.93	-16.54	-2.68e-05	0.0	24.4	-51.72	5.84	127.87	-30.54	-2.09	
69.49													
							48.9	-51.72	-681.36	127.87	-30.54	12.36	-
13.07													
	12	93	103.77	13.58	-7.64e-05	-2019.72	0.0	-205.20	1010.94	145.94	-38.81	-14.80	-
19.92													
			-19.92	-14.80	-2.50e-05	0.0	24.4	-205.20	1.08	145.94	-38.81	-0.61	
103.77													
							48.9	-205.20	-1008.78	145.94	-38.81	13.58	-
19.39													
	12	94	102.86	14.16	-1.05e-04	-2019.72	0.0	-163.22	1012.94	149.00	-37.95	-16.80	-
21.32													
			-21.32	-16.80	-2.72e-05	0.0	24.4	-163.22	3.08	149.00	-37.95	-1.32	
102.86													
							48.9	-163.22	-1006.78	149.00	-37.95	14.16	-
19.81													
	12	95	103.77	13.58	-7.64e-05	-2019.72	0.0	-205.20	1010.94	145.94	-38.81	-14.80	-
19.92													
			-19.92	-14.80	-2.50e-05	0.0	24.4	-205.20	1.08	145.94	-38.81	-0.61	
103.77													
							48.9	-205.20	-1008.78	145.94	-38.81	13.58	-
19.39													
	12	96	102.86	14.16	-1.05e-04	-2019.72	0.0	-163.22	1012.94	149.00	-37.95	-16.80	-
21.32													
			-21.32	-16.80	-2.72e-05	0.0	24.4	-163.22	3.08	149.00	-37.95	-1.32	
102.86													
							48.9	-163.22	-1006.78	149.00	-37.95	14.16	-
19.81													
	12	105	77.07	12.14	-7.45e-05	-1503.46	0.0	-116.00	755.01	129.03	-32.88	-14.59	-
15.61													
			-15.61	-14.59	-2.47e-05	0.0	24.4	-116.00	3.29	129.03	-32.88	-1.23	
77.07													
							48.9	-116.00	-748.44	129.03	-32.88	12.14	-
14.00													
	12	106	76.35	12.61	-9.75e-05	-1503.46	0.0	-82.41	756.61	131.48	-32.20	-16.20	-
16.73													
			-16.73	-16.20	-2.64e-05	0.0	24.4	-82.41	4.89	131.48	-32.20	-1.80	
76.35													
							48.9	-82.41	-746.84	131.48	-32.20	12.61	-
14.34													
	12	107	77.07	12.14	-7.45e-05	-1503.46	0.0	-116.00	755.01	129.03	-32.88	-14.59	-
15.61													
			-15.61	-14.59	-2.47e-05	0.0	24.4	-116.00	3.29	129.03	-32.88	-1.23	
77.07													
							48.9	-116.00	-748.44	129.03	-32.88	12.14	-
14.00													
	12	108	76.35	12.61	-9.75e-05	-1503.46	0.0	-82.41	756.61	131.48	-32.20	-16.20	-
16.73													
			-16.73	-16.20	-2.64e-05	0.0	24.4	-82.41	4.89	131.48	-32.20	-1.80	
76.35													
							48.9	-82.41	-746.84	131.48	-32.20	12.61	-
14.34													
	12	111	69.58	12.30	-9.99e-05	-1374.39	0.0	-55.91	692.83	127.56	-30.63	-16.34	-
15.79													
			-15.79	-16.34	-2.65e-05	0.0	24.4	-55.91	5.64	127.56	-30.63	-2.02	
69.58													
							48.9	-55.91	-681.56	127.56	-30.63	12.30	-
13.03													
	12	113	70.40	11.78	-7.40e-05	-1374.39	0.0	-93.69	691.03	124.80	-31.40	-14.54	-
14.53													
			-14.53	-14.54	-2.46e-05	0.0	24.4	-93.69	3.84	124.80	-31.40	-1.38	
70.40													
							48.9	-93.69	-683.36	124.80	-31.40	11.78	-
12.65													
	12	114	69.67	12.25	-9.71e-05	-1374.39	0.0	-60.11	692.63	127.25	-30.71	-16.14	-
15.65													
			-15.65	-16.14	-2.63e-05	0.0	24.4	-60.11	5.44	127.25	-30.71	-1.95	
69.67													
							48.9	-60.11	-681.76	127.25	-30.71	12.25	-
12.99													
	12	115	70.40	11.78	-7.40e-05	-1374.39	0.0	-93.69	691.03	124.80	-31.40	-14.54	-
14.53													
			-14.53	-14.54	-2.46e-05	0.0	24.4	-93.69	3.84	124.80	-31.40	-1.38	
70.40													
							48.9	-93.69	-683.36	124.80	-31.40	11.78	-
12.65													
	12	116	69.67	12.25	-9.71e-05	-1374.39	0.0	-60.11	692.63	127.25	-30.71	-16.14	-
15.65													
			-15.65	-16.14	-2.63e-05	0.0	24.4	-60.11	5.44	127.25	-30.71	-1.95	
69.67													
							48.9	-60.11	-681.76	127.25	-30.71	12.25	-
12.99													
	13	1	4.09	24.44	7.12e-04	-101.56	0.0	383.45	49.19	246.68	-66.60	-21.74	-
1.86													
			-2.64	-21.74	-3.30e-05	0.0	25.0	383.45	-1.59	246.68	-66.60	1.35	4.09
							50.0	383.45	-52.37	246.68	-66.60	24.44	-
2.64													
	13	4	3.95	30.44	8.68e-04	-101.56	0.0	320.68	49.61	312.18	-83.93	-28.30	-

Viale Duca Alessandro n. 11 – 43123 Parma
Cell. 335 1403156 – E mail ing.concari@gmail.com
Sito web: studioaire.it – P.IVA 02561480340

2.12													
			-2.68	-28.30	-3.72e-05	0.0	25.0	320.68	-1.17	312.18	-83.93	1.07	3.95
							50.0	320.68	-51.95	312.18	-83.93	30.44	-
2.68													
	13	7	2.12	23.45	7.88e-04	-101.56	0.0	675.13	48.75	226.82	-61.46	-18.99	-
3.73													
			-4.73	-18.99	-3.37e-05	0.0	25.0	675.13	-2.03	226.82	-61.46	2.23	2.12
							50.0	675.13	-52.81	226.82	-61.46	23.45	-
4.73													
	13	8	1.97	29.45	9.44e-04	-101.56	0.0	612.37	49.18	292.33	-78.80	-25.55	-
3.99													
			-4.77	-25.55	-3.79e-05	0.0	25.0	612.37	-1.61	292.33	-78.80	1.95	1.97
							50.0	612.37	-52.39	292.33	-78.80	29.45	-
4.77													
	13	10	3.00	24.80	7.04e-04	-78.12	0.0	232.19	38.26	255.26	-68.56	-23.28	-
1.69													
			-2.07	-23.28	-2.96e-05	0.0	25.0	232.19	-0.80	255.26	-68.56	0.76	3.00
							50.0	232.19	-39.86	255.26	-68.56	24.80	-
2.07													
	13	30	5.24	22.56	1.16e-03	-78.12	0.0	-217.76	40.19	256.71	-74.91	-35.82	0.08
			0.08	-35.82	-3.98e-04	0.0	25.0	-217.76	1.13	256.71	-74.91	-6.63	5.24
							50.0	-217.76	-37.93	256.71	-74.91	22.56	0.63
	13	31	0.83	42.00	2.46e-04	-78.12	0.0	542.23	36.84	401.90	-101.81	-23.74	-
3.52													
			-4.59	-23.74	3.26e-04	0.0	25.0	542.23	-2.23	401.90	-101.81	9.13	0.83
							50.0	542.23	-41.29	401.90	-101.81	42.00	-
4.59													
	13	33	6.87	30.74	2.35e-04	-78.12	0.0	-461.97	40.04	262.10	-81.71	-31.39	1.72
			1.72	-31.39	-2.54e-05	0.0	25.0	-461.97	0.98	262.10	-81.71	-0.33	6.87
							50.0	-461.97	-38.08	262.10	-81.71	30.74	2.25
	13	36	-0.81	33.82	1.17e-03	-78.12	0.0	786.45	36.99	396.51	-95.01	-28.16	-
5.17													
			-6.21	-28.16	-4.63e-05	0.0	25.0	786.45	-2.08	396.51	-95.01	2.83	-
0.81													
							50.0	786.45	-41.14	396.51	-95.01	33.82	-
6.21													
	13	37	6.85	30.98	2.34e-04	-78.12	0.0	-473.12	40.06	261.24	-81.58	-30.84	1.71
			1.71	-30.84	5.26e-05	0.0	25.0	-473.12	0.99	261.24	-81.58	0.07	6.85
							50.0	-473.12	-38.07	261.24	-81.58	30.98	2.23
	13	40	-0.79	33.58	1.17e-03	-78.12	0.0	797.59	36.97	397.37	-95.14	-28.72	-
5.15													
			-6.20	-28.72	-1.24e-04	0.0	25.0	797.59	-2.09	397.37	-95.14	2.43	-
0.79													
							50.0	797.59	-41.15	397.37	-95.14	33.58	-
6.20													
	13	62	4.02	22.24	8.62e-04	-78.12	0.0	51.38	39.00	238.76	-66.82	-27.08	-
0.85													
			-0.88	-27.08	-1.90e-04	0.0	25.0	51.38	-0.06	238.76	-66.82	-2.42	4.02
							50.0	51.38	-39.13	238.76	-66.82	22.24	-
0.88													
	13	65	4.81	26.28	3.95e-04	-78.12	0.0	-57.06	38.86	242.85	-70.35	-24.95	-
0.03													
			-0.12	-24.95	-2.73e-05	0.0	25.0	-57.06	-0.21	242.85	-70.35	0.66	4.81
							50.0	-57.06	-39.27	242.85	-70.35	26.28	-
0.12													
	13	68	1.34	17.72	8.67e-04	-78.12	0.0	580.03	37.27	206.53	-50.60	-15.50	-
3.10													
			-3.99	-15.50	-2.79e-05	0.0	25.0	580.03	-1.79	206.53	-50.60	1.11	1.34
							50.0	580.03	-40.85	206.53	-50.60	17.72	-
3.99													
	13	69	4.80	26.38	3.94e-04	-78.12	0.0	-61.94	38.86	242.47	-70.29	-24.71	-
0.04													
			-0.12	-24.71	6.94e-06	0.0	25.0	-61.94	-0.20	242.47	-70.29	0.83	4.80
							50.0	-61.94	-39.26	242.47	-70.29	26.38	-
0.12													
	13	72	1.34	17.62	8.68e-04	-78.12	0.0	584.91	37.27	206.90	-50.66	-15.73	-
3.09													
			-3.99	-15.73	-6.22e-05	0.0	25.0	584.91	-1.80	206.90	-50.66	0.94	1.34
							50.0	584.91	-40.86	206.90	-50.66	17.62	-
3.99													
	13	85	4.67	29.17	-1.60e-04	-78.12	0.0	23.36	38.09	237.62	-69.13	-19.43	0.01
			-0.43	-19.43	4.28e-05	0.0	25.0	23.36	-0.97	237.62	-69.13	4.87	4.67
							50.0	23.36	-40.03	237.62	-69.13	29.17	-
0.43													
	13	89	3.15	18.80	5.48e-04	-78.12	0.0	294.96	37.84	189.75	-51.23	-16.72	-
1.43													
			-2.03	-16.72	-2.54e-05	0.0	25.0	294.96	-1.23	189.75	-51.23	1.04	3.15
							50.0	294.96	-40.29	189.75	-51.23	18.80	-
2.03													
	13	90	3.05	22.80	6.52e-04	-78.12	0.0	253.11	38.12	233.42	-62.79	-21.10	-
1.60													
			-2.06	-21.10	-2.82e-05	0.0	25.0	253.11	-0.94	233.42	-62.79	0.85	3.05
							50.0	253.11	-40.00	233.42	-62.79	22.80	-
2.06													
	13	92	3.05	22.80	6.52e-04	-78.12	0.0	253.11	38.12	233.42	-62.79	-21.10	-
1.60													
			-2.06	-21.10	-2.82e-05	0.0	25.0	253.11	-0.94	233.42	-62.79	0.85	3.05
							50.0	253.11	-40.00	233.42	-62.79	22.80	-
2.06													
	13	95	1.83	18.14	5.99e-04	-78.12	0.0	489.42	37.54	176.52	-47.81	-14.89	-
2.68													
			-3.43	-14.89	-2.58e-05	0.0	25.0	489.42	-1.52	176.52	-47.81	1.63	1.83
							50.0	489.42	-40.58	176.52	-47.81	18.14	-
3.43													
	13	96	1.73	22.14	7.02e-04	-78.12	0.0	447.57	37.83	220.19	-59.36	-19.26	-
2.85													
			-3.45	-19.26	-2.86e-05	0.0	25.0	447.57	-1.23	220.19	-59.36	1.44	1.73
							50.0	447.57	-40.30	220.19	-59.36	22.14	-

Viale Duca Alessandro n. 11 – 43123 Parma
Cell. 335 1403156 – E mail ing.concari@gmail.com
Sito web: studioaire.it – P.IVA 02561480340

3.45
13 101 3.15 18.80 5.48e-04 -78.12 0.0 294.96 37.84 189.75 -51.23 -16.72 -
1.43
-2.03 -16.72 -2.54e-05 0.0 25.0 294.96 -1.23 189.75 -51.23 1.04 3.15
50.0 294.96 -40.29 189.75 -51.23 18.80 -
2.03
13 107 2.89 18.67 5.58e-04 -78.12 0.0 333.85 37.78 187.10 -50.55 -16.36 -
1.68
-2.31 -16.36 -2.55e-05 0.0 25.0 333.85 -1.28 187.10 -50.55 1.16 2.89
50.0 333.85 -40.35 187.10 -50.55 18.67 -
2.31
13 108 2.81 21.87 6.41e-04 -78.12 0.0 300.37 38.01 222.04 -59.79 -19.86 -
1.82
-2.33 -19.86 -2.77e-05 0.0 25.0 300.37 -1.06 222.04 -59.79 1.01 2.81
50.0 300.37 -40.12 222.04 -59.79 21.87 -
2.33
13 111 3.06 22.40 6.41e-04 -78.12 0.0 257.30 38.09 229.05 -61.63 -20.66 -
1.58
-2.06 -20.66 -2.79e-05 0.0 25.0 257.30 -0.97 229.05 -61.63 0.87 3.06
50.0 257.30 -40.03 229.05 -61.63 22.40 -
2.06
13 112 3.06 22.40 6.41e-04 -78.12 0.0 257.30 38.09 229.05 -61.63 -20.66 -
1.58
-2.06 -20.66 -2.79e-05 0.0 25.0 257.30 -0.97 229.05 -61.63 0.87 3.06
50.0 257.30 -40.03 229.05 -61.63 22.40 -
2.06
13 113 3.15 18.80 5.48e-04 -78.12 0.0 294.96 37.84 189.75 -51.23 -16.72 -
1.43
-2.03 -16.72 -2.54e-05 0.0 25.0 294.96 -1.23 189.75 -51.23 1.04 3.15
50.0 294.96 -40.29 189.75 -51.23 18.80 -
2.03
13 114 3.07 22.00 6.31e-04 -78.12 0.0 261.48 38.06 224.69 -60.48 -20.22 -
1.57
-2.06 -20.22 -2.76e-05 0.0 25.0 261.48 -1.00 224.69 -60.48 0.89 3.07
50.0 261.48 -40.06 224.69 -60.48 22.00 -
2.06
13 115 3.15 18.80 5.48e-04 -78.12 0.0 294.96 37.84 189.75 -51.23 -16.72 -
1.43
-2.03 -16.72 -2.54e-05 0.0 25.0 294.96 -1.23 189.75 -51.23 1.04 3.15
50.0 294.96 -40.29 189.75 -51.23 18.80 -
2.03
13 116 3.07 22.00 6.31e-04 -78.12 0.0 261.48 38.06 224.69 -60.48 -20.22 -
1.57
-2.06 -20.22 -2.76e-05 0.0 25.0 261.48 -1.00 224.69 -60.48 0.89 3.07
50.0 261.48 -40.06 224.69 -60.48 22.00 -
2.06
14 4 93.82 18.91 -1.54e-04 -1786.71 0.0 -1073.68 893.33 221.01 -58.74 -20.86 -
15.36
-15.38 -20.86 -3.24e-05 0.0 24.4 -1073.68 -0.02 221.01 -58.74 -0.98
93.82
48.9 -1073.68 -893.37 221.01 -58.74 18.91 -
15.38
14 5 141.91 6.76 -1.08e-04 -2754.71 0.0 -1027.15 1374.49 113.67 -29.50 -14.10 -
25.73
-27.13 -14.10 -2.92e-05 0.0 24.4 -1027.15 -2.86 113.67 -29.50 -3.67
141.91
48.9 -1027.15 -1380.22 113.67 -29.50 6.76 -
27.13
14 8 142.40 13.97 -1.56e-04 -2754.71 0.0 -1271.13 1375.40 185.01 -48.47 -19.93 -
25.46
-26.42 -19.93 -3.19e-05 0.0 24.4 -1271.13 -1.96 185.01 -48.47 -2.98
142.40
48.9 -1271.13 -1379.31 185.01 -48.47 13.97 -
26.42
14 9 71.79 8.99 -8.12e-05 -1374.39 0.0 -638.22 686.48 115.13 -30.59 -11.57 -
12.02
-12.37 -11.57 -2.29e-05 0.0 24.4 -638.22 -0.71 115.13 -30.59 -1.29
71.79
48.9 -638.22 -687.91 115.13 -30.59 8.99 -
12.37
14 50 77.98 -3.57 -3.66e-04 -1374.39 0.0 -2122.05 688.40 146.79 -36.08 -26.45 -
6.20
-6.20 -26.45 -2.59e-04 0.0 24.4 -2122.05 1.21 146.79 -36.08 -15.01
77.98
48.9 -2122.05 -685.99 146.79 -36.08 -3.57 -
5.83
14 51 67.51 49.38 1.04e-04 -1374.39 0.0 2.21 687.06 367.04 -100.26 -21.49 -
16.56
-16.56 -21.49 2.18e-04 0.0 24.4 2.21 -0.13 367.04 -100.26 13.94
67.51
48.9 2.21 -687.32 367.04 -100.26 49.38 -
16.40
14 52 77.37 -6.58 7.52e-05 -1374.39 0.0 -2089.92 688.04 139.48 -31.65 -29.31 -
6.87
-6.87 -29.31 -4.26e-05 0.0 24.4 -2089.92 0.85 139.48 -31.65 -17.94
77.37
48.9 -2089.92 -686.34 139.48 -31.65 -6.58 -
6.36
14 53 68.09 52.77 -3.52e-04 -1374.39 0.0 -21.21 687.49 371.89 -103.69 -19.55 -
15.90
-15.90 -19.55 1.24e-04 0.0 24.4 -21.21 0.30 371.89 -103.69 16.61
68.09
48.9 -21.21 -686.89 371.89 -103.69 52.77 -
15.90
14 82 74.68 5.62 -2.21e-04 -1374.39 0.0 -1365.53 687.60 150.31 -38.65 -19.88 -
9.36
-9.36 -19.88 -1.27e-04 0.0 24.4 -1365.53 0.41 150.31 -38.65 -7.13
74.68

Viale Duca Alessandro n. 11 – 43123 Parma
Cell. 335 1403156 – E mail ing.concari@gmail.com
Sito web: studioaire.it – P.IVA 02561480340

							48.9	-1365.53	-686.79	150.31	-38.65	5.62	-
9.27													
	14	83	69.43	20.06	7.09e-06	-1374.39	0.0	-171.16	686.33	156.04	-42.76	-9.47	-
14.40													
			-14.72	-9.47	7.87e-05	0.0	24.4	-171.16	-0.87	156.04	-42.76	5.29	
69.43													
							48.9	-171.16	-688.06	156.04	-42.76	20.06	-
14.72													
	14	84	74.38	3.94	-8.53e-06	-1374.39	0.0	-1320.56	687.21	145.11	-36.13	-21.28	-
9.63													
			-9.63	-21.28	-2.93e-05	0.0	24.4	-1320.56	0.01	145.11	-36.13	-8.67	
74.38													
							48.9	-1320.56	-687.18	145.11	-36.13	3.94	-
9.58													
	14	85	69.71	21.91	-2.12e-04	-1374.39	0.0	-212.37	686.75	160.17	-44.85	-8.47	-
14.14													
			-14.42	-8.47	3.43e-05	0.0	24.4	-212.37	-0.44	160.17	-44.85	6.72	
69.71													
							48.9	-212.37	-687.64	160.17	-44.85	21.91	-
14.42													
	14	89	71.79	8.99	-8.12e-05	-1374.39	0.0	-638.22	686.48	115.13	-30.59	-11.57	-
12.02													
			-12.37	-11.57	-2.29e-05	0.0	24.4	-638.22	-0.71	115.13	-30.59	-1.29	
71.79													
							48.9	-638.22	-687.91	115.13	-30.59	8.99	-
12.37													
	14	92	72.12	13.80	-1.13e-04	-1374.39	0.0	-800.88	687.08	162.69	-43.24	-15.45	-
11.84													
			-11.90	-15.45	-2.46e-05	0.0	24.4	-800.88	-0.11	162.69	-43.24	-0.82	
72.12													
							48.9	-800.88	-687.30	162.69	-43.24	13.80	-
11.90													
	14	93	104.18	5.70	-8.30e-05	-2019.72	0.0	-769.86	1007.86	91.13	-23.75	-10.94	-
18.75													
			-19.74	-10.94	-2.25e-05	0.0	24.4	-769.86	-2.00	91.13	-23.75	-2.62	
104.18													
							48.9	-769.86	-1011.87	91.13	-23.75	5.70	-
19.74													
	14	96	104.51	10.51	-1.15e-04	-2019.72	0.0	-932.52	1008.46	138.69	-36.39	-14.83	-
18.58													
			-19.26	-14.83	-2.43e-05	0.0	24.4	-932.52	-1.40	138.69	-36.39	-2.16	
104.51													
							48.9	-932.52	-1011.26	138.69	-36.39	10.51	-
19.26													
	14	101	71.79	8.99	-8.12e-05	-1374.39	0.0	-638.22	686.48	115.13	-30.59	-11.57	-
12.02													
			-12.37	-11.57	-2.29e-05	0.0	24.4	-638.22	-0.71	115.13	-30.59	-1.29	
71.79													
							48.9	-638.22	-687.91	115.13	-30.59	8.99	-
12.37													
	14	105	78.27	8.33	-8.16e-05	-1503.46	0.0	-664.55	750.76	110.33	-29.22	-11.44	-
13.37													
			-13.84	-11.44	-2.28e-05	0.0	24.4	-664.55	-0.97	110.33	-29.22	-1.55	
78.27													
							48.9	-664.55	-752.70	110.33	-29.22	8.33	-
13.84													
	14	108	78.53	12.18	-1.07e-04	-1503.46	0.0	-794.68	751.24	148.38	-39.34	-14.55	-
13.23													
			-13.47	-14.55	-2.42e-05	0.0	24.4	-794.68	-0.49	148.38	-39.34	-1.18	
78.53													
							48.9	-794.68	-752.22	148.38	-39.34	12.18	-
13.47													
	14	112	72.09	13.32	-1.10e-04	-1374.39	0.0	-784.61	687.02	157.93	-41.97	-15.06	-
11.86													
			-11.95	-15.06	-2.45e-05	0.0	24.4	-784.61	-0.17	157.93	-41.97	-0.87	
72.09													
							48.9	-784.61	-687.36	157.93	-41.97	13.32	-
11.95													
	14	113	71.79	8.99	-8.12e-05	-1374.39	0.0	-638.22	686.48	115.13	-30.59	-11.57	-
12.02													
			-12.37	-11.57	-2.29e-05	0.0	24.4	-638.22	-0.71	115.13	-30.59	-1.29	
71.79													
							48.9	-638.22	-687.91	115.13	-30.59	8.99	-
12.37													
	14	116	72.05	12.84	-1.07e-04	-1374.39	0.0	-768.35	686.96	153.18	-40.71	-14.67	-
11.88													
			-11.99	-14.67	-2.43e-05	0.0	24.4	-768.35	-0.23	153.18	-40.71	-0.92	
72.05													
							48.9	-768.35	-687.43	153.18	-40.71	12.84	-
11.99													
	15	2	-9.22	3.15	8.65e-04	-101.56	0.0	1474.37	65.27	40.27	-10.37	-4.50	-
19.71													
			-19.71	-4.50	-4.27e-05	0.0	25.0	1474.37	14.49	40.27	-10.37	-0.67	-
9.74													
							50.0	1474.37	-36.29	40.27	-10.37	3.15	-
12.45													
	15	4	-9.22	3.15	8.65e-04	-101.56	0.0	1474.37	65.27	40.27	-10.37	-4.50	-
19.71													
			-19.71	-4.50	-4.27e-05	0.0	25.0	1474.37	14.49	40.27	-10.37	-0.67	-
9.74													
							50.0	1474.37	-36.29	40.27	-10.37	3.15	-
12.45													
	15	5	5.27	4.38	7.93e-04	-101.56	0.0	936.43	46.18	51.62	-12.96	-5.74	0.02
			-2.26	-5.74	-3.63e-05	0.0	25.0	936.43	-4.60	51.62	-12.96	-0.68	5.23
							50.0	936.43	-55.38	51.62	-12.96	4.38	-
2.26													
	15	6	-5.15	3.96	9.45e-04	-101.56	0.0	1453.49	55.99	49.99	-12.62	-5.77	-
12.87													

Viale Duca Alessandro n. 11 – 43123 Parma
Cell. 335 1403156 – E mail ing.concari@gmail.com
Sito web: studioaire.it – P.IVA 02561480340

		-12.87	-5.77	-4.22e-05	0.0	25.0	1453.49	5.21	49.99	-12.62	-0.91	-	5.21
						50.0	1453.49	-45.57	49.99	-12.62	3.96	-	10.25
15	7	5.27	4.38	7.93e-04	-101.56	0.0	936.43	46.18	51.62	-12.96	-5.74	0.02	
		-2.26	-5.74	-3.63e-05	0.0	25.0	936.43	-4.60	51.62	-12.96	-0.68	5.23	
						50.0	936.43	-55.38	51.62	-12.96	4.38	-	2.26
15	13	5.17	3.55	6.28e-04	-78.12	0.0	715.51	33.38	41.95	-10.49	-4.71	1.60	
		-1.23	-4.71	-2.78e-05	0.0	25.0	715.51	-5.68	41.95	-10.49	-0.58	5.07	
						50.0	715.51	-44.74	41.95	-10.49	3.55	-	1.23
15	25	35.85	10.69	2.43e-04	-78.12	0.0	-277.85	20.72	74.51	-29.66	-17.25		34.45
		25.41	-17.25	-3.87e-04	0.0	25.0	-277.85	-18.34	74.51	-29.66	-3.28		34.81
						50.0	-277.85	-57.40	74.51	-29.66	10.69		25.41
15	41	50.76	5.23	-6.81e-04	-78.12	0.0	-1263.65	19.79	51.18	-16.51	-11.93		49.49
		39.92	-11.93	-2.28e-04	0.0	25.0	-1263.65	-19.27	51.18	-16.51	-3.35		49.59
						50.0	-1263.65	-58.34	51.18	-16.51	5.23		39.92
15	44	-80.61	5.15	2.40e-03	-78.12	0.0	4893.14	109.07	6.90	1.28	5.15	-	115.59
		-115.59	-1.22	1.63e-04	0.0	25.0	4893.14	70.01	6.90	1.28	1.96	-	93.22
						50.0	4893.14	30.94	6.90	1.28	-1.22	-	80.61
15	57	17.20	6.24	3.99e-04	-78.12	0.0	230.61	31.42	50.94	-17.67	-9.56		14.03
		10.28	-9.56	-1.88e-04	0.0	25.0	230.61	-7.65	50.94	-17.67	-1.66		17.04
						50.0	230.61	-46.71	50.94	-17.67	6.24		10.28
15	73	35.29	4.14	-1.49e-04	-78.12	0.0	-703.17	20.36	42.07	-12.15	-7.29		33.96
		24.64	-7.29	-1.20e-04	0.0	25.0	-703.17	-18.70	42.07	-12.15	-1.58		34.18
						50.0	-703.17	-57.77	42.07	-12.15	4.14		24.64
15	76	-40.02	0.91	1.41e-03	-78.12	0.0	2727.50	75.43	20.65	-3.97	0.38	-	58.20
		-58.20	0.38	5.67e-05	0.0	25.0	2727.50	36.37	20.65	-3.97	0.64	-	44.23
						50.0	2727.50	-2.69	20.65	-3.97	0.91	-	40.03
15	90	-6.09	2.47	6.50e-04	-78.12	0.0	1081.10	49.20	31.14	-8.01	-3.46	-	13.84
		-13.84	-3.46	-3.22e-05	0.0	25.0	1081.10	10.14	31.14	-8.01	-0.50	-	6.42
						50.0	1081.10	-28.92	31.14	-8.01	2.47	-	8.76
15	92	-6.09	2.47	6.50e-04	-78.12	0.0	1081.10	49.20	31.14	-8.01	-3.46	-	13.84
		-13.84	-3.46	-3.22e-05	0.0	25.0	1081.10	10.14	31.14	-8.01	-0.50	-	6.42
						50.0	1081.10	-28.92	31.14	-8.01	2.47	-	8.76
15	93	3.56	3.28	6.01e-04	-78.12	0.0	722.48	36.48	38.71	-9.74	-4.29	-	0.68
		-1.96	-4.29	-2.80e-05	0.0	25.0	722.48	-2.58	38.71	-9.74	-0.50	3.56	
						50.0	722.48	-41.65	38.71	-9.74	3.28	-	1.96
15	94	-3.35	3.00	7.03e-04	-78.12	0.0	1067.18	43.02	37.62	-9.51	-4.30	-	9.28
		-9.28	-4.30	-3.19e-05	0.0	25.0	1067.18	3.95	37.62	-9.51	-0.65	-	3.40
						50.0	1067.18	-35.11	37.62	-9.51	3.00	-	7.29
15	95	3.56	3.28	6.01e-04	-78.12	0.0	722.48	36.48	38.71	-9.74	-4.29	-	0.68
		-1.96	-4.29	-2.80e-05	0.0	25.0	722.48	-2.58	38.71	-9.74	-0.50	3.56	
						50.0	722.48	-41.65	38.71	-9.74	3.28	-	1.96
15	105	1.15	2.86	5.59e-04	-78.12	0.0	733.61	41.43	33.53	-8.54	-3.61	-	4.33
		-4.33	-3.61	-2.82e-05	0.0	25.0	733.61	2.37	33.53	-8.54	-0.38	1.15	
						50.0	733.61	-36.70	33.53	-8.54	2.86	-	3.14
15	106	-4.25	2.63	6.40e-04	-78.12	0.0	1009.38	46.66	32.66	-8.36	-3.63	-	11.21
		-11.21	-3.63	-3.14e-05	0.0	25.0	1009.38	7.60	32.66	-8.36	-0.50	-	4.42
						50.0	1009.38	-31.47	32.66	-8.36	2.63	-	7.40
15	107	1.15	2.86	5.59e-04	-78.12	0.0	733.61	41.43	33.53	-8.54	-3.61	-	4.33
		-4.33	-3.61	-2.82e-05	0.0	25.0	733.61	2.37	33.53	-8.54	-0.38	1.15	
						50.0	733.61	-36.70	33.53	-8.54	2.86	-	3.14
15	111	-5.43	2.50	6.39e-04	-78.12	0.0	1046.63	48.55	31.25	-8.04	-3.46	-	12.98
		-12.98	-3.46	-3.18e-05	0.0	25.0	1046.63	9.49	31.25	-8.04	-0.48	-	5.72
						50.0	1046.63	-29.57	31.25	-8.04	2.50	-	8.23

Viale Duca Alessandro n. 11 – 43123 Parma
Cell. 335 1403156 – E mail ing.concari@gmail.com
Sito web: studioaire.it – P.IVA 02561480340

15	112	-5.43	2.50	6.39e-04	-78.12	0.0	1046.63	48.55	31.25	-8.04	-3.46	-	12.98	
		-12.98	-3.46	-3.18e-05	0.0	25.0	1046.63	9.49	31.25	-8.04	-0.48	-	5.72	
						50.0	1046.63	-29.57	31.25	-8.04	2.50	-	8.23	
15	113	0.58	2.75	5.48e-04	-78.12	0.0	736.40	42.67	32.23	-8.24	-3.44	-	5.24	
		-5.24	-3.44	-2.83e-05	0.0	25.0	736.40	3.60	32.23	-8.24	-0.35	0.54		
						50.0	736.40	-35.46	32.23	-8.24	2.75	-	3.43	
15	114	-4.78	2.53	6.29e-04	-78.12	0.0	1012.16	47.90	31.36	-8.06	-3.46	-	12.12	
		-12.12	-3.46	-3.14e-05	0.0	25.0	1012.16	8.83	31.36	-8.06	-0.47	-	5.03	
						50.0	1012.16	-30.23	31.36	-8.06	2.53	-	7.69	
15	115	0.58	2.75	5.48e-04	-78.12	0.0	736.40	42.67	32.23	-8.24	-3.44	-	5.24	
		-5.24	-3.44	-2.83e-05	0.0	25.0	736.40	3.60	32.23	-8.24	-0.35	0.54		
						50.0	736.40	-35.46	32.23	-8.24	2.75	-	3.43	
15	116	-4.78	2.53	6.29e-04	-78.12	0.0	1012.16	47.90	31.36	-8.06	-3.46	-	12.12	
		-12.12	-3.46	-3.14e-05	0.0	25.0	1012.16	8.83	31.36	-8.06	-0.47	-	5.03	
						50.0	1012.16	-30.23	31.36	-8.06	2.53	-	7.69	
16	5	140.80	16.69	-9.80e-05	-2754.71	0.0	-508.53	1373.37	149.56	-43.15	-8.22	-	26.56	
		-28.51	-8.22	-3.29e-05	0.0	24.4	-508.53	-3.99	149.56	-43.15	4.23		140.80	
						48.9	-508.53	-1381.34	149.56	-43.15	16.69	-	28.51	
16	6	140.30	13.93	-1.41e-04	-2754.71	0.0	-482.24	1373.90	127.20	-38.72	-5.39	-	27.20	
		-28.88	-5.39	-3.63e-05	0.0	24.4	-482.24	-3.45	127.20	-38.72	4.27		140.30	
						48.9	-482.24	-1380.80	127.20	-38.72	13.93	-	28.88	
16	7	140.80	16.69	-9.80e-05	-2754.71	0.0	-508.53	1373.37	149.56	-43.15	-8.22	-	26.56	
		-28.51	-8.22	-3.29e-05	0.0	24.4	-508.53	-3.99	149.56	-43.15	4.23		140.80	
						48.9	-508.53	-1381.34	149.56	-43.15	16.69	-	28.51	
16	10	70.42	5.33	-1.17e-04	-1374.39	0.0	-222.39	686.07	54.09	-19.23	-0.33	-	13.29	
		-13.84	-0.33	-2.81e-05	0.0	24.4	-222.39	-1.13	54.09	-19.23	2.50		70.42	
						48.9	-222.39	-688.32	54.09	-19.23	5.33	-	13.84	
16	50	67.45	-7.28	-3.24e-04	-1374.39	0.0	717.43	685.05	39.48	-25.77	-7.28	-	15.85	
		-17.24	-10.52	-2.60e-04	0.0	24.4	717.43	-2.15	39.48	-25.77	-8.90		67.45	
						48.9	717.43	-689.34	39.48	-25.77	-10.52	-	17.24	
16	51	72.20	19.22	9.76e-05	-1374.39	0.0	-903.10	686.81	49.91	-7.57	8.10	-	11.86	
		-11.86	8.10	2.11e-04	0.0	24.4	-903.10	-0.39	49.91	-7.57	13.66		72.20	
						48.9	-903.10	-687.58	49.91	-7.57	19.22	-	11.72	
16	53	72.88	15.21	-3.60e-04	-1374.39	0.0	-867.64	687.32	46.24	-4.38	8.53	-	10.86	
		-11.36	8.53	1.18e-04	0.0	24.4	-867.64	0.12	46.24	-4.38	11.87		72.88	
						48.9	-867.64	-687.07	46.24	-4.38	15.21	-	11.36	
16	56	66.76	-6.51	1.33e-04	-1374.39	0.0	681.98	684.54	43.16	-28.96	-7.71	-	16.85	
		-17.60	-7.71	-1.67e-04	0.0	24.4	681.98	-2.66	43.16	-28.96	-7.11		66.76	
						48.9	681.98	-689.85	43.16	-28.96	-6.51	-	17.60	
16	83	72.09	14.18	3.87e-06	-1374.39	0.0	-655.38	686.16	75.68	-19.29	0.83	-	11.72	
		-12.09	0.83	7.57e-05	0.0	24.4	-655.38	-1.04	75.68	-19.29	7.51		72.09	
						48.9	-655.38	-688.23	75.68	-19.29	14.18	-	12.09	
16	85	72.43	11.70	-2.16e-04	-1374.39	0.0	-679.19	686.65	68.67	-17.09	1.88	-	11.30	
		-11.82	1.88	3.22e-05	0.0	24.4	-679.19	-0.55	68.67	-17.09	6.79		72.43	
						48.9	-679.19	-687.74	68.67	-17.09	11.70	-	11.82	
16	88	68.89	1.54	2.30e-05	-1374.39	0.0	209.88	684.99	60.39	-25.51	-5.17	-	14.69	
		-15.52	-5.17	-8.53e-05	0.0	24.4	209.88	-2.21	60.39	-25.51	-1.82		68.89	
						48.9	209.88	-689.40	60.39	-25.51	1.54	-	15.52	
16	90	70.59	6.25	-1.02e-04	-1374.39	0.0	-231.15	685.89	61.55	-20.71	-1.27	-	13.08	
		-13.72	-1.27	-2.70e-05	0.0	24.4	-231.15	-1.31	61.55	-20.71	2.49		70.59	

Viale Duca Alessandro n. 11 – 43123 Parma
Cell. 335 1403156 – E mail ing.concari@gmail.com
Sito web: studioaire.it – P.IVA 02561480340

							48.9	-231.15	-688.50	61.55	-20.71	6.25	-	13.72	
16	93	103.33	12.20	-7.51e-05	-2019.72	0.0	-372.18	1006.98	109.90	-31.92	-5.90	-	19.40		
		-20.81	-5.90	-2.53e-05	0.0	24.4	-372.18	-2.88	109.90	-31.92	3.15	103.33			
						48.9	-372.18	-1012.74	109.90	-31.92	12.20	-	20.81		
16	94	102.99	10.37	-1.04e-04	-2019.72	0.0	-354.65	1007.34	94.99	-28.97	-4.02	-	19.82		
		-21.05	-4.02	-2.75e-05	0.0	24.4	-354.65	-2.52	94.99	-28.97	3.18	102.99			
						48.9	-354.65	-1012.38	94.99	-28.97	10.37	-	21.05		
16	95	103.33	12.20	-7.51e-05	-2019.72	0.0	-372.18	1006.98	109.90	-31.92	-5.90	-	19.40		
		-20.81	-5.90	-2.53e-05	0.0	24.4	-372.18	-2.88	109.90	-31.92	3.15	103.33			
						48.9	-372.18	-1012.74	109.90	-31.92	12.20	-	20.81		
16	105	77.41	8.91	-7.35e-05	-1503.46	0.0	-273.38	749.82	83.14	-25.31	-3.71	-	14.01		
		-14.94	-3.71	-2.49e-05	0.0	24.4	-273.38	-1.91	83.14	-25.31	2.60	77.41			
						48.9	-273.38	-753.63	83.14	-25.31	8.91	-	14.94		
16	106	77.14	7.44	-9.67e-05	-1503.46	0.0	-259.36	750.11	71.22	-22.95	-2.20	-	14.34		
		-15.14	-2.20	-2.67e-05	0.0	24.4	-259.36	-1.62	71.22	-22.95	2.62	77.14			
						48.9	-259.36	-753.35	71.22	-22.95	7.44	-	15.14		
16	107	77.41	8.91	-7.35e-05	-1503.46	0.0	-273.38	749.82	83.14	-25.31	-3.71	-	14.01		
		-14.94	-3.71	-2.49e-05	0.0	24.4	-273.38	-1.91	83.14	-25.31	2.60	77.41			
						48.9	-273.38	-753.63	83.14	-25.31	8.91	-	14.94		
16	111	70.62	6.43	-9.92e-05	-1374.39	0.0	-232.90	685.85	63.04	-21.00	-1.46	-	13.04		
		-13.69	-1.46	-2.68e-05	0.0	24.4	-232.90	-1.34	63.04	-21.00	2.49	70.62			
						48.9	-232.90	-688.54	63.04	-21.00	6.43	-	13.69		
16	113	70.93	8.09	-7.31e-05	-1374.39	0.0	-248.68	685.53	76.46	-23.66	-3.16	-	12.66		
		-13.47	-3.16	-2.48e-05	0.0	24.4	-248.68	-1.66	76.46	-23.66	2.47	70.93			
						48.9	-248.68	-688.86	76.46	-23.66	8.09	-	13.47		
16	114	70.66	6.62	-9.63e-05	-1374.39	0.0	-234.66	685.82	64.53	-21.30	-1.65	-	12.99		
		-13.67	-1.65	-2.66e-05	0.0	24.4	-234.66	-1.38	64.53	-21.30	2.49	70.66			
						48.9	-234.66	-688.57	64.53	-21.30	6.62	-	13.67		
16	115	70.93	8.09	-7.31e-05	-1374.39	0.0	-248.68	685.53	76.46	-23.66	-3.16	-	12.66		
		-13.47	-3.16	-2.48e-05	0.0	24.4	-248.68	-1.66	76.46	-23.66	2.47	70.93			
						48.9	-248.68	-688.86	76.46	-23.66	8.09	-	13.47		
17	2	3.33	27.65	8.67e-04	-101.56	0.0	552.68	49.29	206.85	-57.37	-10.09	-	2.65		
		-3.38	-10.09	-4.07e-05	0.0	25.0	552.68	-1.49	206.85	-57.37	8.78	3.33			
						50.0	552.68	-52.27	206.85	-57.37	27.65	-	3.38		
17	4	3.33	27.65	8.67e-04	-101.56	0.0	552.68	49.29	206.85	-57.37	-10.09	-	2.65		
		-3.38	-10.09	-4.07e-05	0.0	25.0	552.68	-1.49	206.85	-57.37	8.78	3.33			
						50.0	552.68	-52.27	206.85	-57.37	27.65	-	3.38		
17	7	1.00	20.86	7.87e-04	-101.56	0.0	1006.83	48.16	143.13	-39.93	-5.21	-	4.70		
		-6.00	-5.21	-3.61e-05	0.0	25.0	1006.83	-2.62	143.13	-39.93	7.82	1.00			
						50.0	1006.83	-53.40	143.13	-39.93	20.86	-	6.00		
17	10	2.58	22.58	7.03e-04	-78.12	0.0	408.11	38.01	169.63	-47.02	-8.39	-	2.05		
		-2.56	-8.39	-3.25e-05	0.0	25.0	408.11	-1.06	169.63	-47.02	7.09	2.58			
						50.0	408.11	-40.12	169.63	-47.02	22.58	-	2.56		
17	30	5.94	18.20	1.16e-03	-78.12	0.0	-214.82	40.66	165.61	-51.42	-17.65	0.66			
		0.66	-17.65	-3.98e-04	0.0	25.0	-214.82	1.60	165.61	-51.42	0.28	5.94			
						50.0	-214.82	-37.47	165.61	-51.42	18.20	1.45			
17	31	-0.47	41.26	2.46e-04	-78.12	0.0	899.97	35.76	278.95	-71.63	-4.08	-	4.58		
		-6.18	-4.08	3.19e-04	0.0	25.0	899.97	-3.30	278.95	-71.63	18.59	-	0.50		
						50.0	899.97	-42.36	278.95	-71.63	41.26	-	6.18		
17	33	7.35	25.78	2.37e-04	-78.12	0.0	-442.63	39.79	177.55	-58.09	-16.81	2.27			
		2.27	-16.81	-2.75e-05	0.0	25.0	-442.63	0.72	177.55	-58.09	4.48	7.35			
						50.0	-442.63	-38.34	177.55	-58.09	25.78	2.67			
17	36	-1.91	33.68	1.17e-03	-78.12	0.0	1127.79	36.63	267.01	-64.95	-4.92	-	6.18		
		-7.41	-4.92	-5.14e-05	0.0	25.0	1127.79	-2.43	267.01	-64.95	14.38	-	1.91		

Viale Duca Alessandro n. 11 – 43123 Parma
Cell. 335 1403156 – E mail ing.concari@gmail.com
Sito web: studioaire.it – P.IVA 02561480340

							50.0	1127.79	-41.49	267.01	-64.95	33.68	-
7.41													
	17	37	7.30	25.94	2.36e-04	-78.12	0.0	-442.98	39.65	177.41	-58.03	-16.72	2.25
			2.25	-16.72	4.95e-05	0.0	25.0	-442.98	0.59	177.41	-58.03	4.61	7.30
							50.0	-442.98	-38.47	177.41	-58.03	25.94	2.58
	17	40	-1.86	33.52	1.17e-03	-78.12	0.0	1128.14	36.77	267.15	-65.02	-5.01	-
6.16													
			-7.32	-5.01	-1.28e-04	0.0	25.0	1128.14	-2.29	267.15	-65.02	14.26	-
1.86													
							50.0	1128.14	-41.36	267.15	-65.02	33.52	-
7.32													
	17	62	4.03	19.16	8.61e-04	-78.12	0.0	154.44	39.07	155.94	-45.68	-11.76	-
0.85													
			-0.85	-11.76	-1.91e-04	0.0	25.0	154.44	7.87e-03	155.94	-45.68	3.70	4.03
							50.0	154.44	-39.05	155.94	-45.68	19.16	-
0.85													
	17	65	4.68	22.93	3.95e-04	-78.12	0.0	59.05	38.61	162.81	-49.07	-11.23	-
0.10													
			-0.30	-11.23	-2.96e-05	0.0	25.0	59.05	-0.45	162.81	-49.07	5.85	4.68
							50.0	59.05	-39.51	162.81	-49.07	22.93	-
0.30													
	17	68	0.41	16.92	8.65e-04	-78.12	0.0	826.05	37.04	133.92	-33.28	-3.02	-
3.96													
			-4.97	-3.02	-3.06e-05	0.0	25.0	826.05	-2.02	133.92	-33.28	6.95	0.41
							50.0	826.05	-41.08	133.92	-33.28	16.92	-
4.97													
	17	69	4.66	23.00	3.95e-04	-78.12	0.0	58.90	38.55	162.75	-49.04	-11.20	-
0.11													
			-0.34	-11.20	4.21e-06	0.0	25.0	58.90	-0.51	162.75	-49.04	5.90	4.66
							50.0	58.90	-39.57	162.75	-49.04	23.00	-
0.34													
	17	72	0.44	16.85	8.66e-04	-78.12	0.0	826.20	37.10	133.98	-33.31	-3.06	-
3.96													
			-4.94	-3.06	-6.44e-05	0.0	25.0	826.20	-1.96	133.98	-33.31	6.90	0.44
							50.0	826.20	-41.02	133.98	-33.31	16.85	-
4.94													
	17	85	4.05	26.14	-1.58e-04	-78.12	0.0	210.57	37.34	162.22	-48.10	-7.68	-
0.43													
			-1.24	-7.68	4.03e-05	0.0	25.0	210.57	-1.72	162.22	-48.10	9.23	4.05
							50.0	210.57	-40.79	162.22	-48.10	26.14	-
1.24													
	17	90	2.56	20.68	6.51e-04	-78.12	0.0	432.71	37.88	154.44	-42.85	-7.49	-
2.04													
			-2.62	-7.49	-3.08e-05	0.0	25.0	432.71	-1.18	154.44	-42.85	6.60	2.56
							50.0	432.71	-40.25	154.44	-42.85	20.68	-
2.62													
	17	92	2.56	20.68	6.51e-04	-78.12	0.0	432.71	37.88	154.44	-42.85	-7.49	-
2.04													
			-2.62	-7.49	-3.08e-05	0.0	25.0	432.71	-1.18	154.44	-42.85	6.60	2.56
							50.0	432.71	-40.25	154.44	-42.85	20.68	-
2.62													
	17	95	1.00	16.16	5.98e-04	-78.12	0.0	735.47	37.13	111.96	-31.22	-4.23	-
3.40													
			-4.36	-4.23	-2.77e-05	0.0	25.0	735.47	-1.94	111.96	-31.22	5.96	1.00
							50.0	735.47	-41.00	111.96	-31.22	16.16	-
4.36													
	17	107	2.21	16.75	5.57e-04	-78.12	0.0	532.62	37.53	121.63	-33.84	-5.40	-
2.29													
			-3.05	-5.40	-2.75e-05	0.0	25.0	532.62	-1.54	121.63	-33.84	5.68	2.21
							50.0	532.62	-40.60	121.63	-33.84	16.75	-
3.05													
	17	111	2.55	20.31	6.41e-04	-78.12	0.0	437.63	37.85	151.40	-42.01	-7.31	-
2.03													
			-2.63	-7.31	-3.05e-05	0.0	25.0	437.63	-1.21	151.40	-42.01	6.50	2.55
							50.0	437.63	-40.27	151.40	-42.01	20.31	-
2.63													
	17	112	2.55	20.31	6.41e-04	-78.12	0.0	437.63	37.85	151.40	-42.01	-7.31	-
2.03													
			-2.63	-7.31	-3.05e-05	0.0	25.0	437.63	-1.21	151.40	-42.01	6.50	2.55
							50.0	437.63	-40.27	151.40	-42.01	20.31	-
2.63													
	17	114	2.55	19.93	6.30e-04	-78.12	0.0	442.55	37.83	148.36	-41.18	-7.13	-
2.03													
			-2.64	-7.13	-3.01e-05	0.0	25.0	442.55	-1.23	148.36	-41.18	6.40	2.55
							50.0	442.55	-40.30	148.36	-41.18	19.93	-
2.64													
	17	115	2.51	16.90	5.47e-04	-78.12	0.0	481.90	37.63	124.05	-34.49	-5.69	-
2.01													
			-2.72	-5.69	-2.74e-05	0.0	25.0	481.90	-1.44	124.05	-34.49	5.60	2.51
							50.0	481.90	-40.50	124.05	-34.49	16.90	-
2.72													
	17	116	2.55	19.93	6.30e-04	-78.12	0.0	442.55	37.83	148.36	-41.18	-7.13	-
2.03													
			-2.64	-7.13	-3.01e-05	0.0	25.0	442.55	-1.23	148.36	-41.18	6.40	2.55
							50.0	442.55	-40.30	148.36	-41.18	19.93	-
2.64													
	18	4	93.60	24.70	-1.52e-04	-1786.71	0.0	-1216.76	892.53	184.73	-46.68	-12.33	-
15.38													
			-15.79	-12.33	-3.41e-05	0.0	24.4	-1216.76	-0.82	184.73	-46.68	6.18	
93.60													
							48.9	-1216.76	-894.18	184.73	-46.68	24.70	-
15.79													
	18	5	140.60	14.47	-1.07e-04	-2754.71	0.0	-1120.00	1374.88	98.05	-21.46	-8.75	-
27.13													
			-28.35	-8.75	-3.08e-05	0.0	24.4	-1120.00	-2.48	98.05	-21.46	2.86	
140.60													
							48.9	-1120.00	-1379.83	98.05	-21.46	14.47	-
28.35													

Viale Duca Alessandro n. 11 – 43123 Parma
Cell. 335 1403156 – E mail ing.concari@gmail.com
Sito web: studioaire.it – P.IVA 02561480340

18 8 141.42 22.98 -1.55e-04 -2754.71 0.0 -1413.58 1375.31 157.45 -37.02 -11.59 -
26.43
-27.43 -11.59 -3.39e-05 0.0 24.4 -1413.58 -2.04 157.45 -37.02 5.69
141.42
48.9 -1413.58 -1379.39 157.45 -37.02 22.98 -
27.43
18 9 71.38 12.45 -8.03e-05 -1374.39 0.0 -710.14 686.23 96.40 -23.94 -7.30 -
12.38
-12.85 -7.30 -2.38e-05 0.0 24.4 -710.14 -0.97 96.40 -23.94 2.58
71.38
48.9 -710.14 -688.16 96.40 -23.94 12.45 -
12.85
18 45 68.34 49.22 -3.60e-04 -1374.39 0.0 12.32 687.93 290.21 -87.41 -13.44 -
15.78
-15.78 -13.44 -1.26e-04 0.0 24.4 12.32 0.73 290.21 -87.41 17.89
68.34
48.9 12.32 -686.46 290.21 -87.41 49.22 -
15.51
18 50 77.71 17.84 -3.64e-04 -1374.39 0.0 -2519.63 685.51 140.19 -24.37 -14.14 -
5.84
-6.71 -14.14 -2.63e-04 0.0 24.4 -2519.63 -1.69 140.19 -24.37 1.85
77.71
48.9 -2519.63 -688.88 140.19 -24.37 17.84 -
6.71
18 51 67.75 44.80 1.04e-04 -1374.39 0.0 99.71 687.74 290.81 -83.02 -11.57 -
16.40
-16.40 -11.57 2.18e-04 0.0 24.4 99.71 0.54 290.81 -83.02 16.61
67.75
48.9 99.71 -686.65 290.81 -83.02 44.80 -
16.09
18 52 77.17 17.88 7.72e-05 -1374.39 0.0 -2489.77 685.23 149.26 -22.29 -16.31 -
6.37
-7.27 -16.31 -4.59e-05 0.0 24.4 -2489.77 -1.97 149.26 -22.29 0.78
77.17
48.9 -2489.77 -689.16 149.26 -22.29 17.88 -
7.27
18 75 69.23 18.57 4.03e-06 -1374.39 0.0 -165.18 686.80 125.67 -36.99 -7.89 -
14.67
-14.85 -7.89 -3.05e-05 0.0 24.4 -165.18 -0.39 125.67 -36.99 5.34
69.23
48.9 -165.18 -687.59 125.67 -36.99 18.57 -
14.85
18 82 74.42 17.38 -2.19e-04 -1374.39 0.0 -1595.84 686.03 133.49 -28.77 -11.18 -
9.27
-9.86 -11.18 -1.29e-04 0.0 24.4 -1595.84 -1.16 133.49 -28.77 3.10
74.42
48.9 -1595.84 -688.36 133.49 -28.77 17.38 -
9.86
18 83 69.20 16.60 7.48e-06 -1374.39 0.0 -137.59 686.88 122.68 -35.71 -6.45 -
14.72
-14.86 -6.45 7.84e-05 0.0 24.4 -137.59 -0.31 122.68 -35.71 5.08
69.20
48.9 -137.59 -687.51 122.68 -35.71 16.60 -
14.86
18 84 74.06 17.90 -7.37e-06 -1374.39 0.0 -1542.85 685.72 136.20 -26.98 -12.02 -
9.59
-10.28 -12.02 -3.15e-05 0.0 24.4 -1542.85 -1.47 136.20 -26.98 2.94
74.06
48.9 -1542.85 -688.67 136.20 -26.98 17.90 -
10.28
18 87 69.20 16.57 1.39e-05 -1374.39 0.0 -140.17 686.84 122.04 -35.98 -6.16 -
14.71
-14.86 -6.16 2.49e-05 0.0 24.4 -140.17 -0.36 122.04 -35.98 5.21
69.20
48.9 -140.17 -687.55 122.04 -35.98 16.57 -
14.86
18 89 71.38 12.45 -8.03e-05 -1374.39 0.0 -710.14 686.23 96.40 -23.94 -7.30 -
12.38
-12.85 -7.30 -2.38e-05 0.0 24.4 -710.14 -0.97 96.40 -23.94 2.58
71.38
48.9 -710.14 -688.16 96.40 -23.94 12.45 -
12.85
18 92 71.92 18.13 -1.12e-04 -1374.39 0.0 -905.86 686.52 136.00 -34.31 -9.19 -
11.90
-12.24 -9.19 -2.59e-05 0.0 24.4 -905.86 -0.68 136.00 -34.31 4.47
71.92
48.9 -905.86 -687.87 136.00 -34.31 18.13 -
12.24
18 93 103.25 11.30 -8.18e-05 -2019.72 0.0 -841.35 1008.08 78.22 -17.50 -6.80 -
19.74
-20.61 -6.80 -2.37e-05 0.0 24.4 -841.35 -1.78 78.22 -17.50 2.25
103.25
48.9 -841.35 -1011.64 78.22 -17.50 11.30 -
20.61
18 96 103.79 16.98 -1.14e-04 -2019.72 0.0 -1037.07 1008.37 117.82 -27.87 -8.70 -
19.27
-20.00 -8.70 -2.58e-05 0.0 24.4 -1037.07 -1.49 117.82 -27.87 4.14
103.79
48.9 -1037.07 -1011.35 117.82 -27.87 16.98 -
20.00
18 101 71.38 12.45 -8.03e-05 -1374.39 0.0 -710.14 686.23 96.40 -23.94 -7.30 -
12.38
-12.85 -7.30 -2.38e-05 0.0 24.4 -710.14 -0.97 96.40 -23.94 2.58
71.38
48.9 -710.14 -688.16 96.40 -23.94 12.45 -
12.85
18 105 77.75 12.22 -8.06e-05 -1503.46 0.0 -736.38 750.60 92.76 -22.65 -7.20 -
13.85

Viale Duca Alessandro n. 11 – 43123 Parma
Cell. 335 1403156 – E mail ing.concari@gmail.com
Sito web: studioaire.it – P.IVA 02561480340

			-14.40	-7.20	-2.38e-05	0.0	24.4	-736.38	-1.13	92.76	-22.65	2.51		
77.75														
							48.9	-736.38	-752.86	92.76	-22.65	12.22	-	
14.40														
	18	108	78.19	16.76	-1.06e-04	-1503.46	0.0	-892.96	750.83	124.45	-30.95	-8.72	-	
13.47														
			-13.91	-8.72	-2.55e-05	0.0	24.4	-892.96	-0.90	124.45	-30.95	4.02		
78.19														
							48.9	-892.96	-752.63	124.45	-30.95	16.76	-	
13.91														
	18	112	71.87	17.56	-1.09e-04	-1374.39	0.0	-886.29	686.49	132.04	-33.28	-9.01	-	
11.95														
			-12.30	-9.01	-2.57e-05	0.0	24.4	-886.29	-0.71	132.04	-33.28	4.28		
71.87														
							48.9	-886.29	-687.90	132.04	-33.28	17.56	-	
12.30														
	18	113	71.38	12.45	-8.03e-05	-1374.39	0.0	-710.14	686.23	96.40	-23.94	-7.30	-	
12.38														
			-12.85	-7.30	-2.38e-05	0.0	24.4	-710.14	-0.97	96.40	-23.94	2.58		
71.38														
							48.9	-710.14	-688.16	96.40	-23.94	12.45	-	
12.85														
	18	116	71.81	16.99	-1.06e-04	-1374.39	0.0	-866.72	686.46	128.08	-32.24	-8.82	-	
12.00														
			-12.36	-8.82	-2.55e-05	0.0	24.4	-866.72	-0.74	128.08	-32.24	4.09		
71.81														
							48.9	-866.72	-687.93	128.08	-32.24	16.99	-	
12.36														
	19	5	0.82	7.63	7.92e-04	-101.56	0.0	1421.57	35.27	66.69	-17.10	-5.38	-	
2.23														
			-9.97	-5.38	-3.62e-05	0.0	25.0	1421.57	-15.51	66.69	-17.10	1.13	0.25	
							50.0	1421.57	-66.29	66.69	-17.10	7.63	-	
9.97														
	19	6	-5.22	7.54	9.42e-04	-101.56	0.0	1793.28	45.03	66.07	-16.70	-5.58	-	
10.21														
			-13.07	-5.58	-4.21e-05	0.0	25.0	1793.28	-5.76	66.07	-16.70	0.98	-	
5.30														
							50.0	1793.28	-56.54	66.07	-16.70	7.54	-	
13.07														
	19	8	-5.22	7.54	9.42e-04	-101.56	0.0	1793.28	45.03	66.07	-16.70	-5.58	-	
10.21														
			-13.07	-5.58	-4.21e-05	0.0	25.0	1793.28	-5.76	66.07	-16.70	0.98	-	
5.30														
							50.0	1793.28	-56.54	66.07	-16.70	7.54	-	
13.07														
	19	9	0.58	5.04	5.47e-04	-78.12	0.0	920.49	35.33	42.16	-10.67	-3.35	-	
3.41														
			-5.27	-3.35	-2.82e-05	0.0	25.0	920.49	-3.73	42.16	-10.67	0.85	0.54	
							50.0	920.49	-42.79	42.16	-10.67	5.04	-	
5.27														
	19	33	12.10	8.25	2.55e-04	-78.12	0.0	1390.92	3.18	65.92	-27.28	-12.71		
12.10														
			-7.01	-12.71	-2.76e-05	0.0	25.0	1390.92	-35.88	65.92	-27.28	-2.23	7.43	
							50.0	1390.92	-74.94	65.92	-27.28	8.25	-	
7.01														
	19	41	39.93	-0.22	-6.70e-04	-78.12	0.0	-5.40	-32.67	39.23	-17.95	-8.90		
39.93														
			2.50	-8.90	-2.26e-04	0.0	25.0	-5.40	-71.73	39.23	-17.95	-4.56		
26.10														
							50.0	-5.40	-110.80	39.23	-17.95	-0.22	2.50	
	19	44	-25.09	10.62	2.38e-03	-78.12	0.0	3330.33	146.81	43.46	-1.71	1.55	-	
80.56														
			-80.56	1.55	1.60e-04	0.0	25.0	3330.33	107.75	43.46	-1.71	6.09	-	
47.94														
							50.0	3330.33	68.69	43.46	-1.71	10.62	-	
25.09														
	19	46	-26.69	14.25	2.39e-03	-78.12	0.0	3600.36	131.44	60.31	-11.26	-3.26	-	
72.52														
			-72.52	-3.26	8.01e-05	0.0	25.0	3600.36	92.37	60.31	-11.26	5.49	-	
44.72														
							50.0	3600.36	53.31	60.31	-11.26	14.25	-	
26.69														
	19	47	31.89	-3.85	-6.78e-04	-78.12	0.0	-275.43	-17.30	22.39	-8.39	-4.08		
31.89														
			4.10	-4.08	-1.46e-04	0.0	25.0	-275.43	-56.36	22.39	-8.39	-3.97		
22.88														
							50.0	-275.43	-95.42	22.39	-8.39	-3.85	4.10	
	19	50	-24.49	14.85	2.39e-03	-78.12	0.0	3243.55	113.22	61.73	-12.15	-3.40	-	
59.98														
			-59.98	-3.40	-2.83e-04	0.0	25.0	3243.55	74.15	61.73	-12.15	5.72	-	
37.35														
							50.0	3243.55	35.09	61.73	-12.15	14.85	-	
24.49														
	19	65	5.55	6.32	4.04e-04	-78.12	0.0	1096.39	19.53	52.48	-18.03	-7.49	4.47	
			-5.86	-7.49	-3.03e-05	0.0	25.0	1096.39	-19.53	52.48	-18.03	-0.58	4.19	
							50.0	1096.39	-58.60	52.48	-18.03	6.32	-	
5.86														
	19	73	24.65	2.36	-1.42e-04	-78.12	0.0	153.24	-6.94	40.88	-14.33	-5.71		
24.65														
			0.95	-5.71	-1.18e-04	0.0	25.0	153.24	-46.00	40.88	-14.33	-1.68		
17.68														
							50.0	153.24	-85.07	40.88	-14.33	2.36	0.95	
	19	76	-14.80	7.62	1.40e-03	-78.12	0.0	2084.23	88.01	42.77	-6.59	-1.21	-	
39.99														
			-39.99	-1.21	5.55e-05	0.0	25.0	2084.23	48.95	42.77	-6.59	3.21	-	
22.51														
							50.0	2084.23	9.88	42.77	-6.59	7.62	-	
14.80														

Viale Duca Alessandro n. 11 – 43123 Parma
Cell. 335 1403156 – E mail ing.concari@gmail.com
Sito web: studioaire.it – P.IVA 02561480340

19	78	-15.66	9.08	1.40e-03	-78.12	0.0	2211.99	80.65	49.99	-10.80	-3.37	-	36.28
		-36.28	-3.37	1.75e-05	0.0	25.0	2211.99	41.59	49.99	-10.80	2.86	-	21.09
						50.0	2211.99	2.52	49.99	-10.80	9.08	-	15.66
19	79	20.94	0.90	-1.46e-04	-78.12	0.0	25.48	0.42	33.66	-10.12	-3.55	20.94	
		1.81	-3.55	-8.03e-05	0.0	25.0	25.48	-38.64	33.66	-10.12	-1.33	16.26	
						50.0	25.48	-77.70	33.66	-10.12	0.90	1.81	
19	82	-14.57	9.34	1.40e-03	-78.12	0.0	2057.13	72.73	50.60	-11.18	-3.42	-	30.84
		-30.84	-3.42	-1.42e-04	0.0	25.0	2057.13	33.67	50.60	-11.18	2.96	-	17.89
						50.0	2057.13	-5.39	50.60	-11.18	9.34	-	14.71
19	89	0.58	5.04	5.47e-04	-78.12	0.0	920.49	35.33	42.16	-10.67	-3.35	-	3.41
		-5.27	-3.35	-2.82e-05	0.0	25.0	920.49	-3.73	42.16	-10.67	0.85	0.54	
						50.0	920.49	-42.79	42.16	-10.67	5.04	-	5.27
19	93	0.61	5.76	6.01e-04	-78.12	0.0	1070.44	28.23	50.08	-12.82	-4.03	-	1.94
		-7.35	-4.03	-2.79e-05	0.0	25.0	1070.44	-10.84	50.08	-12.82	0.87	0.24	
						50.0	1070.44	-49.90	50.08	-12.82	5.76	-	7.35
19	94	-3.40	5.70	7.01e-04	-78.12	0.0	1318.25	34.73	49.67	-12.55	-4.17	-	7.26
		-9.42	-4.17	-3.18e-05	0.0	25.0	1318.25	-4.33	49.67	-12.55	0.76	-	3.46
						50.0	1318.25	-43.40	49.67	-12.55	5.70	-	9.42
19	96	-3.40	5.70	7.01e-04	-78.12	0.0	1318.25	34.73	49.67	-12.55	-4.17	-	7.26
		-9.42	-4.17	-3.18e-05	0.0	25.0	1318.25	-4.33	49.67	-12.55	0.76	-	3.46
						50.0	1318.25	-43.40	49.67	-12.55	5.70	-	9.42
19	101	0.58	5.04	5.47e-04	-78.12	0.0	920.49	35.33	42.16	-10.67	-3.35	-	3.41
		-5.27	-3.35	-2.82e-05	0.0	25.0	920.49	-3.73	42.16	-10.67	0.85	0.54	
						50.0	920.49	-42.79	42.16	-10.67	5.04	-	5.27
19	105	0.57	5.18	5.58e-04	-78.12	0.0	950.48	33.91	43.74	-11.10	-3.48	-	3.12
		-5.68	-3.48	-2.82e-05	0.0	25.0	950.48	-5.15	43.74	-11.10	0.85	0.48	
						50.0	950.48	-44.21	43.74	-11.10	5.18	-	5.68
19	106	-2.48	5.13	6.38e-04	-78.12	0.0	1148.73	39.11	43.41	-10.89	-3.59	-	7.38
		-7.38	-3.59	-3.13e-05	0.0	25.0	1148.73	0.05	43.41	-10.89	0.77	-	2.48
						50.0	1148.73	-39.01	43.41	-10.89	5.13	-	7.34
19	108	-2.48	5.13	6.38e-04	-78.12	0.0	1148.73	39.11	43.41	-10.89	-3.59	-	7.38
		-7.38	-3.59	-3.13e-05	0.0	25.0	1148.73	0.05	43.41	-10.89	0.77	-	2.48
						50.0	1148.73	-39.01	43.41	-10.89	5.13	-	7.34
19	111	-2.78	4.98	6.37e-04	-78.12	0.0	1143.52	41.18	41.78	-10.43	-3.47	-	8.20
		-8.20	-3.47	-3.18e-05	0.0	25.0	1143.52	2.12	41.78	-10.43	0.76	-	2.78
						50.0	1143.52	-36.94	41.78	-10.43	4.98	-	7.13
19	113	0.58	5.04	5.47e-04	-78.12	0.0	920.49	35.33	42.16	-10.67	-3.35	-	3.41
		-5.27	-3.35	-2.82e-05	0.0	25.0	920.49	-3.73	42.16	-10.67	0.85	0.54	
						50.0	920.49	-42.79	42.16	-10.67	5.04	-	5.27
19	114	-2.41	4.99	6.27e-04	-78.12	0.0	1118.73	40.53	41.82	-10.46	-3.46	-	7.67
		-7.67	-3.46	-3.14e-05	0.0	25.0	1118.73	1.47	41.82	-10.46	0.77	-	2.41
						50.0	1118.73	-37.59	41.82	-10.46	4.99	-	6.92
19	116	-2.41	4.99	6.27e-04	-78.12	0.0	1118.73	40.53	41.82	-10.46	-3.46	-	7.67
		-7.67	-3.46	-3.14e-05	0.0	25.0	1118.73	1.47	41.82	-10.46	0.77	-	2.41
						50.0	1118.73	-37.59	41.82	-10.46	4.99	-	6.92
20	5	138.85	17.13	-9.67e-05	-2754.71	0.0	-459.06	1373.37	132.41	-37.18	-5.70	-	28.52
		-30.47	-5.70	-3.29e-05	0.0	24.4	-459.06	-3.98	132.41	-37.18	5.72	138.85	
						48.9	-459.06	-1381.33	132.41	-37.18	17.13	-	30.47
20	6	138.45	15.31	-1.40e-04	-2754.71	0.0	-384.72	1373.25	117.13	-32.34	-5.56	-	28.89
		-30.90	-5.56	-3.66e-05	0.0	24.4	-384.72	-4.11	117.13	-32.34	4.88	138.45	
						48.9	-384.72	-1381.46	117.13	-32.34	15.31	-	30.90
20	7	138.85	17.13	-9.67e-05	-2754.71	0.0	-459.06	1373.37	132.41	-37.18	-5.70	-	28.52

			-30.47	-5.70	-3.29e-05	0.0	24.4	-459.06	-3.98	132.41	-37.18	5.72	
138.85													
							48.9	-459.06	-1381.33	132.41	-37.18	17.13	-
30.47													
	20	10	69.54	7.33	-1.16e-04	-1374.39	0.0	-118.13	684.73	56.47	-14.87	-3.62	-
13.85													
			-15.05	-3.62	-2.88e-05	0.0	24.4	-118.13	-2.46	56.47	-14.87	1.85	
69.54													
							48.9	-118.13	-689.66	56.47	-14.87	7.33	-
15.05													
	20	50	65.25	-1.54	-3.24e-04	-1374.39	0.0	1326.64	681.25	85.89	-21.43	-24.80	-
17.24													
			-20.25	-24.80	-2.64e-04	0.0	24.4	1326.64	-5.95	85.89	-21.43	-13.17	
65.25													
							48.9	1326.64	-693.14	85.89	-21.43	-1.54	-
20.25													
	20	51	72.43	18.41	9.84e-05	-1374.39	0.0	-1175.88	687.70	10.32	-3.34	18.41	-
11.73													
			-11.73	14.46	2.13e-04	0.0	24.4	-1175.88	0.50	10.32	-3.34	16.43	
72.43													
							48.9	-1175.88	-686.69	10.32	-3.34	14.46	-
11.38													
	20	53	72.73	16.36	-3.59e-04	-1374.39	0.0	-1130.87	688.16	11.86	-1.99	16.36	-
11.36													
			-11.36	11.91	1.19e-04	0.0	24.4	-1130.87	0.96	11.86	-1.99	14.13	
72.73													
							48.9	-1130.87	-686.23	11.86	-1.99	11.91	-
11.17													
	20	56	64.96	1.01	1.33e-04	-1374.39	0.0	1281.63	680.79	84.35	-22.78	-22.75	-
17.60													
			-20.47	-22.75	-1.70e-04	0.0	24.4	1281.63	-6.41	84.35	-22.78	-10.87	
64.96													
							48.9	1281.63	-693.60	84.35	-22.78	1.01	-
20.47													
	20	82	67.74	3.87	-1.96e-04	-1374.39	0.0	500.54	683.23	73.40	-19.06	-12.97	-
15.26													
			-17.24	-12.97	-1.31e-04	0.0	24.4	500.54	-3.96	73.40	-19.06	-4.55	
67.74													
							48.9	500.54	-691.16	73.40	-19.06	3.87	-
17.24													
	20	83	71.71	12.50	4.73e-06	-1374.39	0.0	-806.19	686.35	53.80	-15.20	5.60	-
12.09													
			-12.46	5.60	7.68e-05	0.0	24.4	-806.19	-0.85	53.80	-15.20	9.05	
71.71													
							48.9	-806.19	-688.04	53.80	-15.20	12.50	-
12.46													
	20	85	71.96	10.98	-2.15e-04	-1374.39	0.0	-830.66	686.60	51.50	-13.61	4.59	-
11.82													
			-12.24	4.59	3.28e-05	0.0	24.4	-830.66	-0.60	51.50	-13.61	7.79	
71.96													
							48.9	-830.66	-687.79	51.50	-13.61	10.98	-
12.24													
	20	88	67.50	5.38	2.32e-05	-1374.39	0.0	525.01	682.98	75.70	-20.66	-11.97	-
15.52													
			-17.46	-11.97	-8.70e-05	0.0	24.4	525.01	-4.21	75.70	-20.66	-3.29	
67.50													
							48.9	525.01	-691.41	75.70	-20.66	5.38	-
17.46													
	20	90	69.67	7.94	-1.01e-04	-1374.39	0.0	-142.91	684.77	61.57	-16.49	-3.67	-
13.72													
			-14.91	-3.67	-2.76e-05	0.0	24.4	-142.91	-2.42	61.57	-16.49	2.14	
69.67													
							48.9	-142.91	-689.62	61.57	-16.49	7.94	-
14.91													
	20	93	101.89	12.64	-7.41e-05	-2019.72	0.0	-331.71	1006.90	97.84	-27.42	-4.30	-
20.81													
			-22.26	-4.30	-2.53e-05	0.0	24.4	-331.71	-2.96	97.84	-27.42	4.17	
101.89													
							48.9	-331.71	-1012.82	97.84	-27.42	12.64	-
22.26													
	20	94	101.62	11.43	-1.03e-04	-2019.72	0.0	-282.15	1006.81	87.65	-24.19	-4.21	-
21.06													
			-22.55	-4.21	-2.78e-05	0.0	24.4	-282.15	-3.05	87.65	-24.19	3.61	
101.62													
							48.9	-282.15	-1012.91	87.65	-24.19	11.43	-
22.55													
	20	95	101.89	12.64	-7.41e-05	-2019.72	0.0	-331.71	1006.90	97.84	-27.42	-4.30	-
20.81													
			-22.26	-4.30	-2.53e-05	0.0	24.4	-331.71	-2.96	97.84	-27.42	4.17	
101.89													
							48.9	-331.71	-1012.82	97.84	-27.42	12.64	-
22.26													
	20	105	76.33	9.85	-7.28e-05	-1503.46	0.0	-220.32	749.27	76.96	-21.25	-3.87	-
14.94													
			-16.15	-3.87	-2.52e-05	0.0	24.4	-220.32	-2.46	76.96	-21.25	2.99	
76.33													
							48.9	-220.32	-754.19	76.96	-21.25	9.85	-
16.15													
	20	106	76.12	8.88	-9.60e-05	-1503.46	0.0	-180.67	749.20	68.82	-18.67	-3.79	-
15.14													
			-16.38	-3.79	-2.71e-05	0.0	24.4	-180.67	-2.53	68.82	-18.67	2.54	
76.12													
							48.9	-180.67	-754.26	68.82	-18.67	8.88	-
16.38													
	20	107	76.33	9.85	-7.28e-05	-1503.46	0.0	-220.32	749.27	76.96	-21.25	-3.87	-
14.94													
			-16.15	-3.87	-2.52e-05	0.0	24.4	-220.32	-2.46	76.96	-21.25	2.99	
76.33													

Viale Duca Alessandro n. 11 – 43123 Parma
Cell. 335 1403156 – E mail ing.concari@gmail.com
Sito web: studioaire.it – P.IVA 02561480340

							48.9	-220.32	-754.19	76.96	-21.25	9.85	-	16.15
20	111	69.70	8.06	-9.86e-05	-1374.39	0.0	-147.87	684.78	62.58	-16.81	-3.68	-	13.70	
		-14.88	-3.68	-2.73e-05	0.0	24.4	-147.87	-2.41	62.58	-16.81	2.19			69.70
						48.9	-147.87	-689.61	62.58	-16.81	8.06	-	14.88	
20	113	69.94	9.15	-7.25e-05	-1374.39	0.0	-192.47	684.86	71.75	-19.71	-3.76	-	13.48	
		-14.62	-3.76	-2.51e-05	0.0	24.4	-192.47	-2.34	71.75	-19.71	2.70			69.94
						48.9	-192.47	-689.53	71.75	-19.71	9.15	-	14.62	
20	114	69.73	8.18	-9.57e-05	-1374.39	0.0	-152.83	684.79	63.60	-17.13	-3.69	-	13.67	
		-14.85	-3.69	-2.71e-05	0.0	24.4	-152.83	-2.40	63.60	-17.13	2.25			69.73
						48.9	-152.83	-689.60	63.60	-17.13	8.18	-	14.85	
20	115	69.94	9.15	-7.25e-05	-1374.39	0.0	-192.47	684.86	71.75	-19.71	-3.76	-	13.48	
		-14.62	-3.76	-2.51e-05	0.0	24.4	-192.47	-2.34	71.75	-19.71	2.70			69.94
						48.9	-192.47	-689.53	71.75	-19.71	9.15	-	14.62	
21	2	2.78	41.57	8.66e-04	-101.56	0.0	721.01	49.86	153.38	-32.14	2.09	-	3.35	
		-3.79	2.09	-4.34e-05	0.0	25.0	721.01	-0.92	153.38	-32.14	21.83	2.78		
						50.0	721.01	-51.70	153.38	-32.14	41.57	-	3.79	
21	7	0.07	29.39	7.85e-04	-101.56	0.0	1250.06	49.52	100.80	-21.50	3.67	-	5.97	
		-6.58	3.67	-3.80e-05	0.0	25.0	1250.06	-1.26	100.80	-21.50	16.53	0.07		
						50.0	1250.06	-52.04	100.80	-21.50	29.39	-	6.58	
21	10	2.18	34.20	7.02e-04	-78.12	0.0	534.86	38.38	126.42	-26.41	1.59	-	2.54	
		-2.87	1.59	-3.47e-05	0.0	25.0	534.86	-0.68	126.42	-26.41	17.89	2.18		
						50.0	534.86	-39.75	126.42	-26.41	34.20	-	2.87	
21	33	7.49	35.41	2.42e-04	-78.12	0.0	-404.63	38.86	133.03	-33.47	-5.49	2.68		
		2.54	-5.49	-2.85e-05	0.0	25.0	-404.63	-0.20	133.03	-33.47	14.96	7.49		
						50.0	-404.63	-39.26	133.03	-33.47	35.41	2.54		
21	36	-2.78	52.63	1.16e-03	-78.12	0.0	1359.13	37.77	198.55	-37.00	9.47	-	7.37	
		-7.95	9.47	-5.60e-05	0.0	25.0	1359.13	-1.29	198.55	-37.00	31.05	-	2.78	
						50.0	1359.13	-40.36	198.55	-37.00	52.63	-	7.95	
21	38	6.28	37.65	1.17e-03	-78.12	0.0	-365.24	38.27	140.42	-30.22	-5.99	1.58		
		1.21	-5.99	-4.37e-05	0.0	25.0	-365.24	-0.80	140.42	-30.22	15.83	6.28		
						50.0	-365.24	-39.86	140.42	-30.22	37.65	1.21		
21	40	-2.74	53.08	1.16e-03	-78.12	0.0	1246.14	37.63	199.57	-37.04	9.41	-	7.29	
		-7.96	9.41	-1.31e-04	0.0	25.0	1246.14	-1.43	199.57	-37.04	31.24	-	2.74	
						50.0	1246.14	-40.50	199.57	-37.04	53.08	-	7.96	
21	62	3.84	33.28	8.58e-04	-78.12	0.0	175.63	38.37	122.62	-25.45	-1.45	-	0.82	
		-1.26	-1.45	-1.91e-04	0.0	25.0	175.63	-0.70	122.62	-25.45	15.91	3.84		
						50.0	175.63	-39.76	122.62	-25.45	33.28	-	1.26	
21	65	4.45	32.07	3.97e-04	-78.12	0.0	157.43	38.50	119.96	-28.00	-1.30	-	0.28	
		-0.58	-1.30	-3.10e-05	0.0	25.0	157.43	-0.57	119.96	-28.00	15.39	4.45		
						50.0	157.43	-39.63	119.96	-28.00	32.07	-	0.58	
21	68	-0.27	27.36	8.61e-04	-78.12	0.0	992.22	38.16	98.77	-17.99	4.57	-	4.95	
		-5.36	4.57	-3.31e-05	0.0	25.0	992.22	-0.90	98.77	-17.99	15.96	-	0.27	
						50.0	992.22	-39.97	98.77	-17.99	27.36	-	5.36	
21	70	3.93	33.20	8.65e-04	-78.12	0.0	162.07	38.30	123.03	-26.17	-1.72	-	0.78	
		-1.14	-1.72	-3.72e-05	0.0	25.0	162.07	-0.76	123.03	-26.17	15.74	3.93		
						50.0	162.07	-39.83	123.03	-26.17	33.20	-	1.14	
21	72	-0.25	27.56	8.62e-04	-78.12	0.0	941.74	38.10	99.21	-18.00	4.54	-	4.91	
		-5.37	4.54	-6.58e-05	0.0	25.0	941.74	-0.96	99.21	-18.00	16.05	-	0.25	
						50.0	941.74	-40.03	99.21	-18.00	27.56	-	5.37	
21	90	2.12	31.00	6.50e-04	-78.12	0.0	563.41	38.34	114.24	-23.97	1.62	-	2.59	
		-2.94	1.62	-3.28e-05	0.0	25.0	563.41	-0.72	114.24	-23.97	16.31	2.12		
						50.0	563.41	-39.78	114.24	-23.97	31.00	-	2.94	
21	95	0.31	22.87	5.96e-04	-78.12	0.0	916.11	38.12	79.18	-16.88	2.68	-	4.34	
		-4.80	2.68	-2.92e-05	0.0	25.0	916.11	-0.95	79.18	-16.88	12.77	0.31		
						50.0	916.11	-40.01	79.18	-16.88	22.87	-	4.80	
21	107	1.65	24.25	5.56e-04	-78.12	0.0	679.63	38.24	87.74	-18.65	1.89	-	3.03	

Viale Duca Alessandro n. 11 – 43123 Parma
Cell. 335 1403156 – E mail ing.concari@gmail.com
Sito web: studioaire.it – P.IVA 02561480340

			-3.43	1.89	-2.90e-05	0.0	25.0	679.63	-0.83	87.74	-18.65	13.07	1.65
							50.0	679.63	-39.89	87.74	-18.65	24.25	-
3.43													
	21	111	2.10	30.36	6.40e-04	-78.12	0.0	569.12	38.33	111.80	-23.48	1.63	-
2.60													
			-2.96	1.63	-3.24e-05	0.0	25.0	569.12	-0.73	111.80	-23.48	15.99	2.10
							50.0	569.12	-39.79	111.80	-23.48	30.36	-
2.96													
	21	114	2.09	29.72	6.29e-04	-78.12	0.0	574.83	38.33	109.37	-22.99	1.64	-
2.61													
			-2.97	1.64	-3.20e-05	0.0	25.0	574.83	-0.74	109.37	-22.99	15.68	2.09
							50.0	574.83	-39.80	109.37	-22.99	29.72	-
2.97													
	21	115	1.99	24.59	5.46e-04	-78.12	0.0	620.51	38.27	89.87	-19.09	1.70	-
2.70													
			-3.09	1.70	-2.90e-05	0.0	25.0	620.51	-0.80	89.87	-19.09	13.14	1.99
							50.0	620.51	-39.86	89.87	-19.09	24.59	-
3.09													
	22	2	93.07	13.31	-1.51e-04	-1786.71	0.0	-1313.07	892.04	83.89	-28.31	3.75	-
15.79													
			-16.44	3.75	-3.48e-05	0.0	24.4	-1313.07	-1.32	83.89	-28.31	8.53	
93.07													
							48.9	-1313.07	-894.67	83.89	-28.31	13.31	-
16.44													
	22	5	139.44	6.34	-1.05e-04	-2754.71	0.0	-1149.36	1375.09	6.72	-8.43	6.34	-
28.35													
			-29.46	0.75	-3.11e-05	0.0	24.4	-1149.36	-2.26	6.72	-8.43	3.55	
139.44													
							48.9	-1149.36	-1379.62	6.72	-8.43	0.75	-
29.46													
	22	8	140.40	7.47	-1.53e-04	-2754.71	0.0	-1474.16	1375.29	41.67	-19.12	7.47	-
27.43													
			-28.45	6.96	-3.44e-05	0.0	24.4	-1474.16	-2.07	41.67	-19.12	7.21	
140.40													
							48.9	-1474.16	-1379.42	41.67	-19.12	6.96	-
28.45													
	22	9	70.85	5.46	-7.95e-05	-1374.39	0.0	-760.21	686.03	37.65	-13.56	2.02	-
12.85													
			-13.42	2.02	-2.42e-05	0.0	24.4	-760.21	-1.16	37.65	-13.56	3.74	
70.85													
							48.9	-760.21	-688.36	37.65	-13.56	5.46	-
13.42													
	22	15	118.18	5.74	-8.15e-05	-2342.39	0.0	-921.30	1169.28	-4.57	-4.37	5.74	-
24.49													
			-25.43	-0.89	-2.38e-05	0.0	24.4	-921.30	-1.91	-4.57	-4.37	2.42	
118.18													
							48.9	-921.30	-1173.11	-4.57	-4.37	-0.89	-
25.43													
	22	46	76.83	14.68	-3.68e-04	-1374.39	0.0	-2455.02	685.39	12.58	0.18	14.68	-
6.71													
			-7.61	-0.54	1.08e-04	0.0	24.4	-2455.02	-1.81	12.58	0.18	7.07	
76.83													
							48.9	-2455.02	-689.00	12.58	0.18	-0.54	-
7.61													
	22	49	68.52	35.99	-3.37e-04	-1374.39	0.0	-8.20	687.60	179.62	-66.49	-3.30	-
15.55													
			-15.55	-3.30	-1.10e-06	0.0	24.4	-8.20	0.41	179.62	-66.49	16.35	
68.52													
							48.9	-8.20	-686.79	179.62	-66.49	35.99	-
15.39													
	22	52	76.19	17.76	7.90e-05	-1374.39	0.0	-2486.45	684.97	5.07	0.97	17.76	-
7.27													
			-8.32	-4.01	-4.53e-05	0.0	24.4	-2486.45	-2.23	5.07	0.97	6.88	
76.19													
							48.9	-2486.45	-689.42	5.07	0.97	-4.01	-
8.32													
	22	53	68.55	36.28	-3.52e-04	-1374.39	0.0	-14.90	687.61	180.96	-66.55	-3.65	-
15.53													
			-15.53	-3.65	1.21e-04	0.0	24.4	-14.90	0.42	180.96	-66.55	16.32	
68.55													
							48.9	-14.90	-686.78	180.96	-66.55	36.28	-
15.36													
	22	55	67.90	33.90	1.19e-04	-1374.39	0.0	-22.08	687.27	180.52	-66.57	-2.96	-
16.11													
			-16.11	-2.96	9.41e-05	0.0	24.4	-22.08	0.08	180.52	-66.57	15.47	
67.90													
							48.9	-22.08	-687.12	180.52	-66.57	33.90	-
16.06													
	22	56	76.17	18.11	9.36e-05	-1374.39	0.0	-2479.75	684.96	3.73	1.04	18.11	-
7.29													
			-8.35	-4.29	-1.67e-04	0.0	24.4	-2479.75	-2.23	3.73	1.04	6.91	
76.17													
							48.9	-2479.75	-689.43	3.73	1.04	-4.29	-
8.35													
	22	78	73.78	7.93	-2.21e-04	-1374.39	0.0	-1604.79	685.80	37.03	-10.71	7.93	-
9.87													
			-10.56	4.67	3.26e-05	0.0	24.4	-1604.79	-1.39	37.03	-10.71	6.30	
73.78													
							48.9	-1604.79	-688.59	37.03	-10.71	4.67	-
10.56													
	22	79	68.95	12.87	1.07e-05	-1374.39	0.0	-262.08	686.47	75.54	-27.81	-2.69	-
14.86													
			-15.21	-2.69	-8.46e-05	0.0	24.4	-262.08	-0.73	75.54	-27.81	5.09	
68.95													
							48.9	-262.08	-687.92	75.54	-27.81	12.87	-
15.21													
	22	85	69.42	15.37	-2.11e-04	-1374.39	0.0	-320.13	686.71	85.94	-29.26	-5.28	-
14.44													

			-14.69	-5.28	3.27e-05	0.0	24.4	-320.13	-0.48	85.94	-29.26	5.05	
69.42													
							48.9	-320.13	-687.68	85.94	-29.26	15.37	-
14.69													
	22	86	73.77	9.13	-2.24e-04	-1374.39	0.0	-1612.43	685.76	33.35	-10.32	9.13	-
9.86													
			-10.57	4.07	-7.61e-05	0.0	24.4	-1612.43	-1.43	33.35	-10.32	6.60	
73.77													
							48.9	-1612.43	-688.63	33.35	-10.32	4.07	-
10.57													
	22	87	68.96	13.48	1.42e-05	-1374.39	0.0	-254.44	686.51	79.22	-28.20	-3.89	-
14.87													
			-15.20	-3.89	2.41e-05	0.0	24.4	-254.44	-0.69	79.22	-28.20	4.79	
68.96													
							48.9	-254.44	-687.88	79.22	-28.20	13.48	-
15.20													
	22	89	70.85	5.46	-7.95e-05	-1374.39	0.0	-760.21	686.03	37.65	-13.56	2.02	-
12.85													
			-13.42	2.02	-2.42e-05	0.0	24.4	-760.21	-1.16	37.65	-13.56	3.74	
70.85													
							48.9	-760.21	-688.36	37.65	-13.56	5.46	-
13.42													
	22	90	71.49	9.60	-1.11e-04	-1374.39	0.0	-976.74	686.16	60.95	-20.68	2.77	-
12.24													
			-12.75	2.77	-2.64e-05	0.0	24.4	-976.74	-1.03	60.95	-20.68	6.18	
71.49													
							48.9	-976.74	-688.23	60.95	-20.68	9.60	-
12.75													
	22	93	102.41	4.50	-8.08e-05	-2019.72	0.0	-867.60	1008.20	9.50	-7.43	4.50	-
20.61													
			-21.43	1.23	-2.40e-05	0.0	24.4	-867.60	-1.66	9.50	-7.43	2.86	
102.41													
							48.9	-867.60	-1011.53	9.50	-7.43	1.23	-
21.43													
	22	95	102.41	4.50	-8.08e-05	-2019.72	0.0	-867.60	1008.20	9.50	-7.43	4.50	-
20.61													
			-21.43	1.23	-2.40e-05	0.0	24.4	-867.60	-1.66	9.50	-7.43	2.86	
102.41													
							48.9	-867.60	-1011.53	9.50	-7.43	1.23	-
21.43													
	22	96	103.05	5.37	-1.13e-04	-2019.72	0.0	-1084.13	1008.33	32.80	-14.55	5.25	-
20.00													
			-20.76	5.25	-2.62e-05	0.0	24.4	-1084.13	-1.53	32.80	-14.55	5.31	
103.05													
							48.9	-1084.13	-1011.39	32.80	-14.55	5.37	-
20.76													
	22	101	70.85	5.46	-7.95e-05	-1374.39	0.0	-760.21	686.03	37.65	-13.56	2.02	-
12.85													
			-13.42	2.02	-2.42e-05	0.0	24.4	-760.21	-1.16	37.65	-13.56	3.74	
70.85													
							48.9	-760.21	-688.36	37.65	-13.56	5.46	-
13.42													
	22	105	77.16	4.61	-7.98e-05	-1503.46	0.0	-781.69	750.46	32.02	-12.33	2.52	-
14.41													
			-15.03	2.52	-2.42e-05	0.0	24.4	-781.69	-1.26	32.02	-12.33	3.57	
77.16													
							48.9	-781.69	-752.99	32.02	-12.33	4.61	-
15.03													
	22	108	77.68	7.92	-1.05e-04	-1503.46	0.0	-954.91	750.57	50.66	-18.03	3.12	-
13.92													
			-14.49	3.12	-2.59e-05	0.0	24.4	-954.91	-1.16	50.66	-18.03	5.52	
77.68													
							48.9	-954.91	-752.89	50.66	-18.03	7.92	-
14.49													
	22	111	71.43	9.19	-1.08e-04	-1374.39	0.0	-955.09	686.15	58.62	-19.97	2.70	-
12.30													
			-12.82	2.70	-2.62e-05	0.0	24.4	-955.09	-1.05	58.62	-19.97	5.94	
71.43													
							48.9	-955.09	-688.24	58.62	-19.97	9.19	-
12.82													
	22	112	71.43	9.19	-1.08e-04	-1374.39	0.0	-955.09	686.15	58.62	-19.97	2.70	-
12.30													
			-12.82	2.70	-2.62e-05	0.0	24.4	-955.09	-1.05	58.62	-19.97	5.94	
71.43													
							48.9	-955.09	-688.24	58.62	-19.97	9.19	-
12.82													
	22	113	70.85	5.46	-7.95e-05	-1374.39	0.0	-760.21	686.03	37.65	-13.56	2.02	-
12.85													
			-13.42	2.02	-2.42e-05	0.0	24.4	-760.21	-1.16	37.65	-13.56	3.74	
70.85													
							48.9	-760.21	-688.36	37.65	-13.56	5.46	-
13.42													
	22	114	71.37	8.77	-1.05e-04	-1374.39	0.0	-933.43	686.13	56.29	-19.26	2.62	-
12.36													
			-12.88	2.62	-2.60e-05	0.0	24.4	-933.43	-1.06	56.29	-19.26	5.70	
71.37													
							48.9	-933.43	-688.25	56.29	-19.26	8.77	-
12.88													
	22	116	71.37	8.77	-1.05e-04	-1374.39	0.0	-933.43	686.13	56.29	-19.26	2.62	-
12.36													
			-12.88	2.62	-2.60e-05	0.0	24.4	-933.43	-1.06	56.29	-19.26	5.70	
71.37													
							48.9	-933.43	-688.25	56.29	-19.26	8.77	-
12.88													
	23	4	-7.79	-1.20	8.58e-04	-101.56	0.0	1666.70	29.46	15.24	-12.08	-1.20	-
9.92													
			-20.57	-7.44	-4.25e-05	0.0	25.0	1666.70	-21.33	15.24	-12.08	-4.32	-
8.90													

Viale Duca Alessandro n. 11 – 43123 Parma
Cell. 335 1403156 – E mail ing.concari@gmail.com
Sito web: studioaire.it – P.IVA 02561480340

							50.0	1666.70	-72.11	15.24	-12.08	-7.44	-
20.57													
	23	7	-9.69	-1.00	7.89e-04	-101.56	0.0	1978.72	10.36	38.57	-15.23	-2.37	-
9.94													
			-30.14	-2.37	-3.59e-05	0.0	25.0	1978.72	-40.42	38.57	-15.23	-1.68	-
13.69													
							50.0	1978.72	-91.20	38.57	-15.23	-1.00	-
30.14													
	23	8	-12.37	-2.09	9.38e-04	-101.56	0.0	2155.29	16.67	27.05	-14.93	-2.09	-
13.04													
			-30.08	-5.90	-4.19e-05	0.0	25.0	2155.29	-34.11	27.05	-14.93	-3.99	-
15.21													
							50.0	2155.29	-84.89	27.05	-14.93	-5.90	-
30.08													
	23	9	-4.24	-1.13	5.45e-04	-78.12	0.0	1146.25	17.81	20.58	-9.53	-1.13	-
5.25													
			-15.86	-1.96	-2.80e-05	0.0	25.0	1146.25	-21.25	20.58	-9.53	-1.54	-
5.67													
							50.0	1146.25	-60.32	20.58	-9.53	-1.96	-
15.86													
	23	13	-8.29	-0.41	6.25e-04	-78.12	0.0	1634.84	5.02	32.39	-12.37	-2.03	-
8.37													
			-25.38	-2.03	-2.75e-05	0.0	25.0	1634.84	-34.04	32.39	-12.37	-1.22	-
11.99													
							50.0	1634.84	-73.10	32.39	-12.37	-0.41	-
25.38													
	23	25	-6.98	10.88	2.52e-04	-78.12	0.0	2185.98	-33.63	54.63	-20.11	-6.63	-
6.98													
			-38.49	-6.63	-3.77e-04	0.0	25.0	2185.98	-72.70	54.63	-20.11	2.13	-
17.85													
							50.0	2185.98	-111.76	54.63	-20.11	10.88	-
38.49													
	23	28	4.59	4.06	1.14e-03	-78.12	0.0	582.88	78.10	-31.88	1.41	4.06	-
10.41													
			-10.41	-23.49	2.94e-04	0.0	25.0	582.88	39.04	-31.88	1.41	-9.71	1.83
							50.0	582.88	-0.02	-31.88	1.41	-23.49	4.29
	23	34	-15.28	-6.22	1.16e-03	-78.12	0.0	2571.66	10.56	13.30	-18.92	-6.22	-
15.74													
			-29.15	-10.31	3.09e-05	0.0	25.0	2571.66	-28.50	13.30	-18.92	-8.26	-
17.56													
							50.0	2571.66	-67.56	13.30	-18.92	-10.31	-
29.15													
	23	35	1.67	3.66	2.25e-04	-78.12	0.0	197.20	33.90	9.46	0.21	3.66	-
1.65													
			-5.05	-2.30	-1.15e-04	0.0	25.0	197.20	-5.16	9.46	0.21	0.68	1.53
							50.0	197.20	-44.22	9.46	0.21	-2.30	-
5.05													
	23	41	2.51	23.86	-6.56e-04	-78.12	0.0	1334.35	-32.94	73.00	-16.04	-4.23	2.51
			-32.08	-4.23	-2.20e-04	0.0	25.0	1334.35	-72.01	73.00	-16.04	9.82	-
9.90													
							50.0	1334.35	-111.07	73.00	-16.04	23.86	-
32.08													
	23	44	3.15	3.94	2.36e-03	-78.12	0.0	1560.18	98.21	-83.77	-1.50	3.94	-
25.04													
			-25.04	-49.00	1.55e-04	0.0	25.0	1560.18	59.15	-83.77	-1.50	-22.53	-
6.06													
							50.0	1560.18	20.09	-83.77	-1.50	-49.00	3.15
	23	57	-5.84	4.41	4.02e-04	-78.12	0.0	1607.59	-6.17	37.63	-14.27	-3.75	-
5.84													
			-26.29	-3.75	-1.84e-04	0.0	25.0	1607.59	-45.24	37.63	-14.27	0.33	-
11.18													
							50.0	1607.59	-84.30	37.63	-14.27	4.41	-
26.29													
	23	66	-9.87	-3.29	8.61e-04	-78.12	0.0	1824.61	16.55	13.89	-13.57	-3.29	-
10.82													
			-21.66	-7.12	-3.99e-06	0.0	25.0	1824.61	-22.51	13.89	-13.57	-5.20	-
11.36													
							50.0	1824.61	-61.58	13.89	-13.57	-7.12	-
21.66													
	23	67	-0.98	1.32	3.89e-04	-78.12	0.0	656.24	25.79	14.99	-5.17	1.32	-
2.98													
			-10.01	-2.02	-5.85e-05	0.0	25.0	656.24	-13.27	14.99	-5.17	-0.35	-
1.61													
							50.0	656.24	-52.33	14.99	-5.17	-2.02	-
10.01													
	23	73	0.96	15.23	-1.35e-04	-78.12	0.0	1122.96	-13.51	58.61	-12.88	-3.32	0.96
			-24.69	-3.32	-1.16e-04	0.0	25.0	1122.96	-52.57	58.61	-12.88	5.95	-
6.98													
							50.0	1122.96	-91.64	58.61	-12.88	15.23	-
24.69													
	23	76	-5.21	1.35	1.39e-03	-78.12	0.0	1357.88	55.85	-29.73	-5.85	1.35	-
14.76													
			-14.76	-24.36	5.32e-05	0.0	25.0	1357.88	16.79	-29.73	-5.85	-11.51	-
5.99													
							50.0	1357.88	-22.27	-29.73	-5.85	-24.36	-
6.98													
	23	79	1.82	13.30	-1.39e-04	-78.12	0.0	837.55	-3.92	51.81	-10.15	-1.80	1.82
			-19.81	-1.80	-7.82e-05	0.0	25.0	837.55	-42.98	51.81	-10.15	5.75	-
4.11													
							50.0	837.55	-82.05	51.81	-10.15	13.30	-
19.81													
	23	89	-4.24	-1.13	5.45e-04	-78.12	0.0	1146.25	17.81	20.58	-9.53	-1.13	-
5.25													
			-15.86	-1.96	-2.80e-05	0.0	25.0	1146.25	-21.25	20.58	-9.53	-1.54	-
5.67													
							50.0	1146.25	-60.32	20.58	-9.53	-1.96	-
15.86													
	23	92	-5.78	-0.95	6.45e-04	-78.12	0.0	1263.96	22.01	12.90	-9.33	-0.95	-

Viale Duca Alessandro n. 11 – 43123 Parma
Cell. 335 1403156 – E mail ing.concari@gmail.com
Sito web: studioaire.it – P.IVA 02561480340

7.31			-15.83	-5.22	-3.21e-05	0.0	25.0	1263.96	-17.05	12.90	-9.33	-3.09	-
6.69							50.0	1263.96	-56.11	12.90	-9.33	-5.22	-
15.83	23	93	-7.05	-0.93	5.99e-04	-78.12	0.0	1471.98	9.28	28.45	-11.43	-1.73	-
7.33			-22.21	-1.73	-2.76e-05	0.0	25.0	1471.98	-29.78	28.45	-11.43	-1.33	-
9.88							50.0	1471.98	-68.84	28.45	-11.43	-0.93	-
22.21	23	95	-7.05	-0.93	5.99e-04	-78.12	0.0	1471.98	9.28	28.45	-11.43	-1.73	-
7.33			-22.21	-1.73	-2.76e-05	0.0	25.0	1471.98	-29.78	28.45	-11.43	-1.33	-
9.88							50.0	1471.98	-68.84	28.45	-11.43	-0.93	-
22.21	23	96	-8.81	-1.55	6.98e-04	-78.12	0.0	1589.69	13.49	20.78	-11.22	-1.55	-
9.39			-22.17	-4.19	-3.17e-05	0.0	25.0	1589.69	-25.58	20.78	-11.22	-2.87	-
10.90							50.0	1589.69	-64.64	20.78	-11.22	-4.19	-
22.17	23	101	-4.24	-1.13	5.45e-04	-78.12	0.0	1146.25	17.81	20.58	-9.53	-1.13	-
5.25			-15.86	-1.96	-2.80e-05	0.0	25.0	1146.25	-21.25	20.58	-9.53	-1.54	-
5.67							50.0	1146.25	-60.32	20.58	-9.53	-1.96	-
15.86	23	107	-4.84	-1.25	5.56e-04	-78.12	0.0	1211.40	16.10	22.15	-9.91	-1.25	-
5.66			-17.13	-1.75	-2.79e-05	0.0	25.0	1211.40	-22.96	22.15	-9.91	-1.50	-
6.52							50.0	1211.40	-62.02	22.15	-9.91	-1.75	-
17.13	23	108	-6.10	-1.11	6.36e-04	-78.12	0.0	1305.57	19.47	16.01	-9.75	-1.11	-
7.32			-17.10	-4.36	-3.12e-05	0.0	25.0	1305.57	-19.60	16.01	-9.75	-2.73	-
7.33							50.0	1305.57	-58.66	16.01	-9.75	-4.36	-
17.10	23	111	-5.63	-0.97	6.35e-04	-78.12	0.0	1252.19	21.59	13.67	-9.35	-0.97	-
7.11			-15.83	-4.90	-3.17e-05	0.0	25.0	1252.19	-17.47	13.67	-9.35	-2.93	-
6.59							50.0	1252.19	-56.53	13.67	-9.35	-4.90	-
15.83	23	112	-5.63	-0.97	6.35e-04	-78.12	0.0	1252.19	21.59	13.67	-9.35	-0.97	-
7.11			-15.83	-4.90	-3.17e-05	0.0	25.0	1252.19	-17.47	13.67	-9.35	-2.93	-
6.59							50.0	1252.19	-56.53	13.67	-9.35	-4.90	-
15.83	23	113	-4.24	-1.13	5.45e-04	-78.12	0.0	1146.25	17.81	20.58	-9.53	-1.13	-
5.25			-15.86	-1.96	-2.80e-05	0.0	25.0	1146.25	-21.25	20.58	-9.53	-1.54	-
5.67							50.0	1146.25	-60.32	20.58	-9.53	-1.96	-
15.86	23	114	-5.47	-0.99	6.25e-04	-78.12	0.0	1240.42	21.17	14.44	-9.37	-0.99	-
6.90			-15.83	-4.57	-3.12e-05	0.0	25.0	1240.42	-17.89	14.44	-9.37	-2.78	-
6.48							50.0	1240.42	-56.95	14.44	-9.37	-4.57	-
15.83	23	115	-4.24	-1.13	5.45e-04	-78.12	0.0	1146.25	17.81	20.58	-9.53	-1.13	-
5.25			-15.86	-1.96	-2.80e-05	0.0	25.0	1146.25	-21.25	20.58	-9.53	-1.54	-
5.67							50.0	1146.25	-60.32	20.58	-9.53	-1.96	-
15.86	23	116	-5.47	-0.99	6.25e-04	-78.12	0.0	1240.42	21.17	14.44	-9.37	-0.99	-
6.90			-15.83	-4.57	-3.12e-05	0.0	25.0	1240.42	-17.89	14.44	-9.37	-2.78	-
6.48							50.0	1240.42	-56.95	14.44	-9.37	-4.57	-
15.83	24	5	136.93	17.27	-9.58e-05	-2754.71	0.0	-290.11	1373.47	112.04	-31.00	-2.25	-
30.47			-32.37	-2.25	-3.27e-05	0.0	24.4	-290.11	-3.88	112.04	-31.00	7.51	
136.93							48.9	-290.11	-1381.23	112.04	-31.00	17.27	-
32.37	24	6	136.41	15.87	-1.39e-04	-2754.71	0.0	-174.49	1373.16	96.81	-26.37	-1.40	-
30.91			-32.96	-1.40	-3.66e-05	0.0	24.4	-174.49	-4.19	96.81	-26.37	7.24	
136.41							48.9	-174.49	-1381.55	96.81	-26.37	15.87	-
32.96	24	7	136.93	17.27	-9.58e-05	-2754.71	0.0	-290.11	1373.47	112.04	-31.00	-2.25	-
30.47			-32.37	-2.25	-3.27e-05	0.0	24.4	-290.11	-3.88	112.04	-31.00	7.51	
136.93							48.9	-290.11	-1381.23	112.04	-31.00	17.27	-
32.37	24	10	68.23	8.12	-1.16e-04	-1374.39	0.0	49.85	684.33	44.01	-11.53	-0.18	-
15.06			-16.46	-0.18	-2.90e-05	0.0	24.4	49.85	-2.86	44.01	-11.53	3.97	

Viale Duca Alessandro n. 11 – 43123 Parma
Cell. 335 1403156 – E mail ing.concari@gmail.com
Sito web: studioaire.it – P.IVA 02561480340

68.23														
							48.9	49.85	-690.06	44.01	-11.53	8.12	-	
16.46														
	24	50	62.86	2.77	-3.25e-04	-1374.39	0.0	1759.04	683.53	41.30	-9.27	-8.42	-	
20.25														
			-22.01	-8.42	-2.66e-04	0.0	24.4	1759.04	-3.67	41.30	-9.27	-2.82		
62.86														
							48.9	1759.04	-690.86	41.30	-9.27	2.77	-	
22.01														
	24	51	72.02	11.94	9.91e-05	-1374.39	0.0	-1189.97	684.93	29.81	-8.64	9.09	-	
11.39														
			-12.54	9.09	2.15e-04	0.0	24.4	-1189.97	-2.27	29.81	-8.64	10.51		
72.02														
							48.9	-1189.97	-689.46	29.81	-8.64	11.94	-	
12.54														
	24	53	72.21	10.53	-3.58e-04	-1374.39	0.0	-1137.88	684.77	33.09	-8.87	7.78	-	
11.17														
			-12.39	7.78	1.20e-04	0.0	24.4	-1137.88	-2.43	33.09	-8.87	9.15		
72.21														
							48.9	-1137.88	-689.62	33.09	-8.87	10.53	-	
12.39														
	24	56	62.68	4.18	1.32e-04	-1374.39	0.0	1706.95	683.69	38.01	-9.03	-7.11	-	
20.47														
			-22.16	-7.11	-1.71e-04	0.0	24.4	1706.95	-3.51	38.01	-9.03	-1.46		
62.68														
							48.9	1706.95	-690.70	38.01	-9.03	4.18	-	
22.16														
	24	82	65.99	6.09	-1.96e-04	-1374.39	0.0	774.56	684.05	46.67	-11.64	-4.03	-	
17.24														
			-18.76	-4.03	-1.32e-04	0.0	24.4	774.56	-3.14	46.67	-11.64	1.03		
65.99														
							48.9	774.56	-690.34	46.67	-11.64	6.09	-	
18.76														
	24	83	70.95	11.45	5.38e-06	-1374.39	0.0	-782.77	684.90	55.55	-15.75	2.87	-	
12.47														
			-13.61	2.87	7.75e-05	0.0	24.4	-782.77	-2.29	55.55	-15.75	7.16		
70.95														
							48.9	-782.77	-689.49	55.55	-15.75	11.45	-	
13.61														
	24	85	71.13	10.55	-2.14e-04	-1374.39	0.0	-802.87	684.74	54.06	-14.95	2.44	-	
12.25														
			-13.46	2.44	3.30e-05	0.0	24.4	-802.87	-2.46	54.06	-14.95	6.50		
71.13														
							48.9	-802.87	-689.65	54.06	-14.95	10.55	-	
13.46														
	24	88	65.81	6.99	2.29e-05	-1374.39	0.0	794.66	684.22	48.16	-12.44	-3.60	-	
17.46														
			-18.91	-3.60	-8.75e-05	0.0	24.4	794.66	-2.98	48.16	-12.44	1.69		
65.81														
							48.9	794.66	-690.17	48.16	-12.44	6.99	-	
18.91														
	24	90	68.40	8.58	-1.01e-04	-1374.39	0.0	11.31	684.44	49.08	-13.08	-0.47	-	
14.91														
			-16.26	-0.47	-2.77e-05	0.0	24.4	11.31	-2.76	49.08	-13.08	4.06		
68.40														
							48.9	11.31	-689.95	49.08	-13.08	8.58	-	
16.26														
	24	93	100.45	12.78	-7.35e-05	-2019.72	0.0	-202.18	1006.93	82.59	-22.82	-1.64	-	
22.26														
			-23.69	-1.64	-2.52e-05	0.0	24.4	-202.18	-2.93	82.59	-22.82	5.57		
100.45														
							48.9	-202.18	-1012.79	82.59	-22.82	12.78	-	
23.69														
	24	94	100.11	11.85	-1.03e-04	-2019.72	0.0	-125.09	1006.73	72.44	-19.74	-1.07	-	
22.55														
			-24.09	-1.07	-2.77e-05	0.0	24.4	-125.09	-3.13	72.44	-19.74	5.39		
100.11														
							48.9	-125.09	-1013.00	72.44	-19.74	11.85	-	
24.09														
	24	95	100.45	12.78	-7.35e-05	-2019.72	0.0	-202.18	1006.93	82.59	-22.82	-1.64	-	
22.26														
			-23.69	-1.64	-2.52e-05	0.0	24.4	-202.18	-2.93	82.59	-22.82	5.57		
100.45														
							48.9	-202.18	-1012.79	82.59	-22.82	12.78	-	
23.69														
	24	105	75.09	10.17	-7.24e-05	-1503.46	0.0	-93.05	749.10	63.90	-17.50	-1.16	-	
16.15														
			-17.43	-1.16	-2.52e-05	0.0	24.4	-93.05	-2.63	63.90	-17.50	4.50		
75.09														
							48.9	-93.05	-754.35	63.90	-17.50	10.17	-	
17.43														
	24	106	74.81	9.42	-9.56e-05	-1503.46	0.0	-31.39	748.94	55.78	-15.03	-0.70	-	
16.38														
			-17.75	-0.70	-2.72e-05	0.0	24.4	-31.39	-2.79	55.78	-15.03	4.36		
74.81														
							48.9	-31.39	-754.52	55.78	-15.03	9.42	-	
17.75														
	24	107	75.09	10.17	-7.24e-05	-1503.46	0.0	-93.05	749.10	63.90	-17.50	-1.16	-	
16.15														
			-17.43	-1.16	-2.52e-05	0.0	24.4	-93.05	-2.63	63.90	-17.50	4.50		
75.09														
							48.9	-93.05	-754.35	63.90	-17.50	10.17	-	
17.43														
	24	111	68.44	8.68	-9.83e-05	-1374.39	0.0	3.60	684.46	50.10	-13.39	-0.52	-	
14.88														
			-16.22	-0.52	-2.75e-05	0.0	24.4	3.60	-2.74	50.10	-13.39	4.08		
68.44														
							48.9	3.60	-689.93	50.10	-13.39	8.68	-	

Viale Duca Alessandro n. 11 – 43123 Parma
Cell. 335 1403156 – E mail ing.concari@gmail.com
Sito web: studioaire.it – P.IVA 02561480340

16.22													
	24	113	68.74	9.51	-7.21e-05	-1374.39	0.0	-65.77	684.64	59.23	-16.17	-1.04	-
14.62													
			-15.87	-1.04	-2.52e-05	0.0	24.4	-65.77	-2.55	59.23	-16.17	4.24	
68.74													
							48.9	-65.77	-689.74	59.23	-16.17	9.51	-
15.87													
	24	114	68.47	8.77	-9.54e-05	-1374.39	0.0	-4.11	684.48	51.11	-13.70	-0.58	-
14.85													
			-16.18	-0.58	-2.72e-05	0.0	24.4	-4.11	-2.72	51.11	-13.70	4.10	
68.47													
							48.9	-4.11	-689.91	51.11	-13.70	8.77	-
16.18													
	24	115	68.74	9.51	-7.21e-05	-1374.39	0.0	-65.77	684.64	59.23	-16.17	-1.04	-
14.62													
			-15.87	-1.04	-2.52e-05	0.0	24.4	-65.77	-2.55	59.23	-16.17	4.24	
68.74													
							48.9	-65.77	-689.74	59.23	-16.17	9.51	-
15.87													
	25	2	2.75	31.35	8.64e-04	-101.56	0.0	886.00	51.39	0.19	-3.78	31.35	-
3.76													
			-3.76	27.47	-4.25e-05	0.0	25.0	886.00	0.61	0.19	-3.78	29.41	2.75
							50.0	886.00	-50.17	0.19	-3.78	27.47	-
3.44													
	25	7	-0.05	25.52	7.83e-04	-101.56	0.0	1329.73	51.40	11.26	-2.45	22.60	-
6.55													
			-6.55	22.60	-3.75e-05	0.0	25.0	1329.73	0.62	11.26	-2.45	24.06	-
0.05													
							50.0	1329.73	-50.17	11.26	-2.45	25.52	-
6.23													
	25	9	1.90	18.53	5.45e-04	-78.12	0.0	712.02	39.40	1.81	-2.33	18.53	-
3.07													
			-3.07	16.97	-2.85e-05	0.0	25.0	712.02	0.33	1.81	-2.33	17.75	1.90
							50.0	712.02	-38.73	1.81	-2.33	16.97	-
2.89													
	25	10	2.18	25.79	7.01e-04	-78.12	0.0	672.39	39.57	-0.35	-3.08	25.79	-
2.84													
			-2.84	22.38	-3.40e-05	0.0	25.0	672.39	0.51	-0.35	-3.08	24.08	2.18
							50.0	672.39	-38.55	-0.35	-3.08	22.38	-
2.57													
	25	33	7.25	18.77	2.66e-04	-78.12	0.0	-199.75	38.26	-13.24	-6.08	18.77	2.56
			2.18	10.68	-2.47e-05	0.0	25.0	-199.75	-0.80	-13.24	-6.08	14.73	7.25
							50.0	-199.75	-39.86	-13.24	-6.08	10.68	2.18
	25	37	7.24	18.20	2.64e-04	-78.12	0.0	-214.57	38.16	-12.45	-6.26	18.20	2.57
			2.15	10.59	4.12e-05	0.0	25.0	-214.57	-0.90	-12.45	-6.26	14.39	7.24
							50.0	-214.57	-39.97	-12.45	-6.26	10.59	2.15
	25	40	-2.66	46.84	1.14e-03	-78.12	0.0	1549.19	40.62	5.37	-4.62	46.84	-
7.93													
			-7.93	39.47	-1.24e-04	0.0	25.0	1549.19	1.55	5.37	-4.62	43.16	-
2.66													
							50.0	1549.19	-37.51	5.37	-4.62	39.47	-
7.15													
	25	53	5.50	18.21	-6.00e-04	-78.12	0.0	-33.50	38.15	12.91	-7.33	9.94	0.82
			0.42	9.94	1.11e-04	0.0	25.0	-33.50	-0.91	12.91	-7.33	14.08	5.50
							50.0	-33.50	-39.98	12.91	-7.33	18.21	0.42
	25	61	4.17	21.44	4.01e-04	-78.12	0.0	338.39	38.90	-7.64	-4.39	21.44	-
0.69													
			-0.74	14.53	-1.52e-04	0.0	25.0	338.39	-0.17	-7.64	-4.39	17.99	4.17
							50.0	338.39	-39.23	-7.64	-4.39	14.53	-
0.74													
	25	65	4.26	20.42	4.08e-04	-78.12	0.0	314.11	38.81	-5.74	-4.81	20.42	-
0.56													
			-0.67	14.67	-2.91e-05	0.0	25.0	314.11	-0.25	-5.74	-4.81	17.54	4.26
							50.0	314.11	-39.31	-5.74	-4.81	14.67	-
0.67													
	25	69	4.26	20.18	4.07e-04	-78.12	0.0	307.64	38.77	-5.40	-4.88	20.18	-
0.56													
			-0.69	14.62	0.0	0.0	25.0	307.64	-0.30	-5.40	-4.88	17.40	4.26
							50.0	307.64	-39.36	-5.40	-4.88	14.62	-
0.69													
	25	72	-0.16	25.09	8.49e-04	-78.12	0.0	1074.12	40.21	6.72	-0.58	24.63	-
5.34													
			-5.34	24.63	-6.26e-05	0.0	25.0	1074.12	1.15	6.72	-0.58	24.86	-
0.16													
							50.0	1074.12	-37.91	6.72	-0.58	25.09	-
4.76													
	25	82	1.92	29.37	1.37e-03	-78.12	0.0	772.78	40.31	-9.19	0.81	29.37	-
3.27													
			-3.27	21.90	-1.29e-04	0.0	25.0	772.78	1.25	-9.19	0.81	25.63	1.92
							50.0	772.78	-37.81	-9.19	0.81	21.90	-
2.65													
	25	89	1.90	18.53	5.45e-04	-78.12	0.0	712.02	39.40	1.81	-2.33	18.53	-
3.07													
			-3.07	16.97	-2.85e-05	0.0	25.0	712.02	0.33	1.81	-2.33	17.75	1.90
							50.0	712.02	-38.73	1.81	-2.33	16.97	-
2.89													
	25	90	2.08	23.37	6.49e-04	-78.12	0.0	685.60	39.51	0.37	-2.83	23.37	-
2.92													
			-2.92	20.58	-3.22e-05	0.0	25.0	685.60	0.45	0.37	-2.83	21.97	2.08
							50.0	685.60	-38.61	0.37	-2.83	20.58	-
2.68													
	25	95	0.22	19.27	5.95e-04	-78.12	0.0	981.42	39.52	7.75	-1.94	17.54	-
4.78													
			-4.78	17.54	-2.88e-05	0.0	25.0	981.42	0.46	7.75	-1.94	18.40	0.22
							50.0	981.42	-38.61	7.75	-1.94	19.27	-
4.54													
	25	101	1.90	18.53	5.45e-04	-78.12	0.0	712.02	39.40	1.81	-2.33	18.53	-
3.07													

Viale Duca Alessandro n. 11 – 43123 Parma
Cell. 335 1403156 – E mail ing.concari@gmail.com
Sito web: studioaire.it – P.IVA 02561480340

			-3.07	16.97	-2.85e-05	0.0	25.0	712.02	0.33	1.81	-2.33	17.75	1.90	
							50.0	712.02	-38.73	1.81	-2.33	16.97	-	2.89
25	107	1.57	18.33	5.55e-04	-78.12	0.0	765.90	39.42	3.00	-2.25	18.33	-	3.41	
		-3.41	17.43	-2.86e-05	0.0	25.0	765.90	0.36	3.00	-2.25	17.88	1.57		
						50.0	765.90	-38.70	3.00	-2.25	17.43	-	3.22	
25	111	2.07	22.89	6.39e-04	-78.12	0.0	688.24	39.50	0.51	-2.78	22.89	-	2.93	
		-2.93	20.22	-3.18e-05	0.0	25.0	688.24	0.44	0.51	-2.78	21.55	2.07		
						50.0	688.24	-38.62	0.51	-2.78	20.22	-	2.70	
25	113	1.90	18.53	5.45e-04	-78.12	0.0	712.02	39.40	1.81	-2.33	18.53	-	3.07	
		-3.07	16.97	-2.85e-05	0.0	25.0	712.02	0.33	1.81	-2.33	17.75	1.90		
						50.0	712.02	-38.73	1.81	-2.33	16.97	-	2.89	
25	114	2.05	22.40	6.28e-04	-78.12	0.0	690.88	39.49	0.66	-2.73	22.40	-	2.95	
		-2.95	19.85	-3.14e-05	0.0	25.0	690.88	0.43	0.66	-2.73	21.13	2.05		
						50.0	690.88	-38.63	0.66	-2.73	19.85	-	2.72	
25	115	1.90	18.53	5.45e-04	-78.12	0.0	712.02	39.40	1.81	-2.33	18.53	-	3.07	
		-3.07	16.97	-2.85e-05	0.0	25.0	712.02	0.33	1.81	-2.33	17.75	1.90		
						50.0	712.02	-38.73	1.81	-2.33	16.97	-	2.89	
26	2	91.97	2.45	-1.50e-04	-1786.71	0.0	-1240.06	890.20	23.87	-15.34	2.45	-	16.45	
		-17.99	-2.01	-3.70e-05	0.0	24.4	-1240.06	-3.16	23.87	-15.34	0.22		91.97	
						48.9	-1240.06	-896.51	23.87	-15.34	-2.01	-	17.99	
26	5	138.16	-0.94	-1.04e-04	-2754.71	0.0	-1069.99	1374.42	-4.02	-1.59	-0.94	-	29.46	
		-30.90	-4.00	-3.32e-05	0.0	24.4	-1069.99	-2.93	-4.02	-1.59	-2.47		138.16	
						48.9	-1069.99	-1380.29	-4.02	-1.59	-4.00	-	30.90	
26	6	139.12	0.74	-1.52e-04	-2754.71	0.0	-1416.15	1374.21	4.35	-8.45	0.74	-	28.45	
		-29.99	-5.57	-3.70e-05	0.0	24.4	-1416.15	-3.14	4.35	-8.45	-2.42		139.12	
						48.9	-1416.15	-1380.49	4.35	-8.45	-5.57	-	29.99	
26	8	139.12	0.74	-1.52e-04	-2754.71	0.0	-1416.15	1374.21	4.35	-8.45	0.74	-	28.45	
		-29.99	-5.57	-3.70e-05	0.0	24.4	-1416.15	-3.14	4.35	-8.45	-2.42		139.12	
						48.9	-1416.15	-1380.49	4.35	-8.45	-5.57	-	29.99	
26	9	70.01	0.60	-7.89e-05	-1374.39	0.0	-687.61	684.92	11.93	-6.52	0.60	-	13.43	
		-14.54	-0.34	-2.55e-05	0.0	24.4	-687.61	-2.27	11.93	-6.52	0.13		70.01	
						48.9	-687.61	-689.47	11.93	-6.52	-0.34	-	14.54	
26	50	77.21	-11.16	-3.59e-04	-1374.39	0.0	-2847.54	690.89	-205.68	9.16	-11.16	-	7.68	
		-7.68	-123.29	-2.68e-04	0.0	24.4	-2847.54	3.69	-205.68	9.16	-67.23		77.21	
						48.9	-2847.54	-683.50	-205.68	9.16	-123.29	-	5.88	
26	51	66.24	108.80	1.04e-04	-1374.39	0.0	272.08	680.18	243.37	-46.73	17.69	-	16.04	
		-19.47	17.69	2.16e-04	0.0	24.4	272.08	-7.01	243.37	-46.73	63.24		66.24	
						48.9	272.08	-694.21	243.37	-46.73	108.80	-	19.47	
26	54	77.21	-10.52	-3.74e-04	-1374.39	0.0	-2843.65	690.81	-199.54	10.27	-10.52	-	7.66	
		-7.66	-119.01	-1.47e-04	0.0	24.4	-2843.65	3.62	-199.54	10.27	-64.77		77.21	
						48.9	-2843.65	-683.58	-199.54	10.27	-119.01	-	5.89	
26	82	73.47	-4.09	-2.16e-04	-1374.39	0.0	-1743.55	687.49	-81.42	-1.67	-4.09	-	10.59	
		-10.59	-54.97	-1.33e-04	0.0	24.4	-1743.55	0.30	-81.42	-1.67	-29.53		73.47	
						48.9	-1743.55	-686.90	-81.42	-1.67	-54.97	-	10.45	
26	83	67.56	52.61	7.83e-06	-1374.39	0.0	-0.92	682.14	114.20	-18.69	7.06	-	15.19	
		-17.66	7.06	7.77e-05	0.0	24.4	-0.92	-5.06	114.20	-18.69	29.83		67.56	
						48.9	-0.92	-692.25	114.20	-18.69	52.61	-	17.66	
26	86	73.47	-3.81	-2.23e-04	-1374.39	0.0	-1741.85	687.46	-78.72	-1.17	-3.81	-	10.58	
		-10.58	-53.09	-8.01e-05	0.0	24.4	-1741.85	0.26	-78.72	-1.17	-28.45		73.47	
						48.9	-1741.85	-686.93	-78.72	-1.17	-53.09	-	10.45	
26	89	70.01	0.60	-7.89e-05	-1374.39	0.0	-687.61	684.92	11.93	-6.52	0.60	-	13.43	
		-14.54	-0.34	-2.55e-05	0.0	24.4	-687.61	-2.27	11.93	-6.52	0.13		70.01	

Viale Duca Alessandro n. 11 – 43123 Parma
Cell. 335 1403156 – E mail ing.concari@gmail.com
Sito web: studioaire.it – P.IVA 02561480340

							48.9	-687.61	-689.47	11.93	-6.52	-0.34	-	14.54
26	90	70.65	1.71	-1.11e-04	-1374.39	0.0	-918.39	684.79	17.51	-11.09	1.71	-	12.75	
		-13.93	-1.39	-2.81e-05	0.0	24.4	-918.39	-2.41	17.51	-11.09	0.16		70.65	
						48.9	-918.39	-689.60	17.51	-11.09	-1.39	-	13.93	
26	93	101.44	-0.55	-8.00e-05	-2019.72	0.0	-805.00	1007.60	-1.09	-1.93	-0.55	-	21.43	
		-22.54	-2.72	-2.55e-05	0.0	24.4	-805.00	-2.26	-1.09	-1.93	-1.63		101.44	
						48.9	-805.00	-1012.12	-1.09	-1.93	-2.72	-	22.54	
26	94	102.08	0.57	-1.12e-04	-2019.72	0.0	-1035.78	1007.47	4.49	-6.50	0.57	-	20.76	
		-21.93	-3.76	-2.81e-05	0.0	24.4	-1035.78	-2.40	4.49	-6.50	-1.59		102.08	
						48.9	-1035.78	-1012.26	4.49	-6.50	-3.76	-	21.93	
26	96	102.08	0.57	-1.12e-04	-2019.72	0.0	-1035.78	1007.47	4.49	-6.50	0.57	-	20.76	
		-21.93	-3.76	-2.81e-05	0.0	24.4	-1035.78	-2.40	4.49	-6.50	-1.59		102.08	
						48.9	-1035.78	-1012.26	4.49	-6.50	-3.76	-	21.93	
26	101	70.01	0.60	-7.89e-05	-1374.39	0.0	-687.61	684.92	11.93	-6.52	0.60	-	13.43	
		-14.54	-0.34	-2.55e-05	0.0	24.4	-687.61	-2.27	11.93	-6.52	0.13		70.01	
						48.9	-687.61	-689.47	11.93	-6.52	-0.34	-	14.54	
26	105	76.29	0.37	-7.91e-05	-1503.46	0.0	-711.09	749.46	9.32	-5.60	0.37	-	15.03	
		-16.14	-0.82	-2.55e-05	0.0	24.4	-711.09	-2.27	9.32	-5.60	-0.23		76.29	
						48.9	-711.09	-754.00	9.32	-5.60	-0.82	-	16.14	
26	106	76.81	1.26	-1.04e-04	-1503.46	0.0	-895.71	749.35	13.79	-9.26	1.26	-	14.49	
		-15.65	-1.65	-2.76e-05	0.0	24.4	-895.71	-2.38	13.79	-9.26	-0.20		76.81	
						48.9	-895.71	-754.11	13.79	-9.26	-1.65	-	15.65	
26	108	76.81	1.26	-1.04e-04	-1503.46	0.0	-895.71	749.35	13.79	-9.26	1.26	-	14.49	
		-15.65	-1.65	-2.76e-05	0.0	24.4	-895.71	-2.38	13.79	-9.26	-0.20		76.81	
						48.9	-895.71	-754.11	13.79	-9.26	-1.65	-	15.65	
26	111	70.58	1.60	-1.07e-04	-1374.39	0.0	-895.31	684.80	16.95	-10.64	1.60	-	12.82	
		-13.99	-1.28	-2.78e-05	0.0	24.4	-895.31	-2.39	16.95	-10.64	0.16		70.58	
						48.9	-895.31	-689.59	16.95	-10.64	-1.28	-	13.99	
26	113	70.01	0.60	-7.89e-05	-1374.39	0.0	-687.61	684.92	11.93	-6.52	0.60	-	13.43	
		-14.54	-0.34	-2.55e-05	0.0	24.4	-687.61	-2.27	11.93	-6.52	0.13		70.01	
						48.9	-687.61	-689.47	11.93	-6.52	-0.34	-	14.54	
26	114	70.52	1.49	-1.04e-04	-1374.39	0.0	-872.23	684.81	16.39	-10.18	1.49	-	12.89	
		-14.05	-1.18	-2.75e-05	0.0	24.4	-872.23	-2.38	16.39	-10.18	0.15		70.52	
						48.9	-872.23	-689.57	16.39	-10.18	-1.18	-	14.05	
26	116	70.52	1.49	-1.04e-04	-1374.39	0.0	-872.23	684.81	16.39	-10.18	1.49	-	12.89	
		-14.05	-1.18	-2.75e-05	0.0	24.4	-872.23	-2.38	16.39	-10.18	0.15		70.52	
						48.9	-872.23	-689.57	16.39	-10.18	-1.18	-	14.05	
27	2	-20.54	-0.49	8.53e-04	-101.56	0.0	3096.55	-8.80	55.75	-11.36	-14.64	-	20.54	
		-50.31	-14.64	-4.47e-05	0.0	25.0	3096.55	-59.58	55.75	-11.36	-7.57	-	29.08	
						50.0	3096.55	-110.36	55.75	-11.36	-0.49	-	50.31	
27	7	-30.11	-9.02	7.81e-04	-101.56	0.0	3916.83	-27.68	22.86	-11.07	-9.02	-	30.11	
		-69.32	-10.59	-3.72e-05	0.0	25.0	3916.83	-78.46	22.86	-11.07	-9.80	-	43.37	
						50.0	3916.83	-129.24	22.86	-11.07	-10.59	-	69.32	
27	8	-30.05	-5.50	9.30e-04	-101.56	0.0	4090.36	-26.17	47.54	-12.50	-14.32	-	30.05	
		-68.50	-14.32	-4.41e-05	0.0	25.0	4090.36	-76.95	47.54	-12.50	-9.91	-	42.93	
						50.0	4090.36	-127.73	47.54	-12.50	-5.50	-	68.50	
27	9	-15.84	-4.29	5.41e-04	-78.12	0.0	2248.47	-7.93	23.90	-7.64	-7.19	-	15.84	
		-39.33	-7.19	-2.91e-05	0.0	25.0	2248.47	-46.99	23.90	-7.64	-5.74	-	22.70	
						50.0	2248.47	-86.06	23.90	-7.64	-4.29	-	39.33	

Viale Duca Alessandro n. 11 – 43123 Parma
Cell. 335 1403156 – E mail ing.concari@gmail.com
Sito web: studioaire.it – P.IVA 02561480340

	27	10	-15.78	0.80	6.91e-04	-78.12	0.0	2422.01	-6.42	48.58	-9.07	-12.49	-
15.78													
			-38.51	-12.49	-3.60e-05	0.0	25.0	2422.01	-45.48	48.58	-9.07	-5.84	-
22.26													
							50.0	2422.01	-84.54	48.58	-9.07	0.80	-
38.51													
	27	25	-38.47	-6.03	2.63e-04	-78.12	0.0	4506.43	-35.56	-5.53	-9.29	-6.03	-
38.47													
			-74.96	-18.09	-3.71e-04	0.0	25.0	4506.43	-74.62	-5.53	-9.29	-12.06	-
51.83													
							50.0	4506.43	-113.69	-5.53	-9.29	-18.09	-
74.96													
	27	28	5.18	18.58	1.12e-03	-78.12	0.0	594.65	18.03	97.91	-8.72	-17.88	4.33
			-6.99	-17.88	2.83e-04	0.0	25.0	594.65	-21.04	97.91	-8.72	0.35	3.55
							50.0	594.65	-60.10	97.91	-8.72	18.58	-
6.99													
	27	37	-35.84	-6.98	2.64e-04	-78.12	0.0	4576.37	-35.44	4.99	-11.05	-6.98	-
35.84													
			-72.17	-15.81	4.22e-05	0.0	25.0	4576.37	-74.51	4.99	-11.05	-11.39	-
49.12													
							50.0	4576.37	-113.57	4.99	-11.05	-15.81	-
72.17													
	27	40	2.52	16.30	1.12e-03	-78.12	0.0	524.71	17.91	87.40	-6.95	-16.94	1.70
			-9.77	-16.94	-1.29e-04	0.0	25.0	524.71	-21.15	87.40	-6.95	-0.32	0.85
							50.0	524.71	-60.22	87.40	-6.95	16.30	-
9.77													
	27	44	3.21	38.40	2.29e-03	-78.12	0.0	1545.66	4.89	191.49	-15.24	-46.54	3.21
			-16.29	-46.54	1.37e-04	0.0	25.0	1545.66	-34.17	191.49	-15.24	-4.07	-
1.66													
							50.0	1545.66	-73.23	191.49	-15.24	38.40	-
16.29													
	27	46	-6.82	33.03	2.30e-03	-78.12	0.0	2670.18	-11.25	182.26	-16.82	-48.21	-
6.82													
			-34.34	-48.21	5.93e-05	0.0	25.0	2670.18	-50.31	182.26	-16.82	-7.59	-
15.70													
							50.0	2670.18	-89.37	182.26	-16.82	33.03	-
34.34													
	27	57	-26.27	-5.94	4.05e-04	-78.12	0.0	3271.54	-21.15	7.45	-8.19	-5.94	-
26.27													
			-56.00	-11.11	-1.81e-04	0.0	25.0	3271.54	-60.21	7.45	-8.19	-8.52	-
36.26													
							50.0	3271.54	-99.27	7.45	-8.19	-11.11	-
56.00													
	27	60	-5.23	7.95	8.36e-04	-78.12	0.0	1410.51	6.90	66.68	-8.61	-14.09	-
5.35													
			-21.78	-14.09	1.15e-04	0.0	25.0	1410.51	-32.16	66.68	-8.61	-3.07	-
8.68													
							50.0	1410.51	-71.22	66.68	-8.61	7.95	-
21.78													
	27	69	-25.12	-6.35	4.06e-04	-78.12	0.0	3302.03	-21.10	12.05	-8.96	-6.35	-
25.12													
			-54.79	-10.11	0.0	0.0	25.0	3302.03	-60.16	12.05	-8.96	-8.23	-
35.07													
							50.0	3302.03	-99.22	12.05	-8.96	-10.11	-
54.79													
	27	72	-6.39	6.95	8.36e-04	-78.12	0.0	1380.02	6.85	62.08	-7.84	-13.68	-
6.50													
			-23.00	-13.68	-6.54e-05	0.0	25.0	1380.02	-32.21	62.08	-7.84	-3.36	-
9.87													
							50.0	1380.02	-71.28	62.08	-7.84	6.95	-
23.00													
	27	76	-6.94	16.28	1.35e-03	-78.12	0.0	1938.64	-0.85	106.09	-11.45	-26.32	-
6.94													
			-27.96	-26.32	4.44e-05	0.0	25.0	1938.64	-39.91	106.09	-11.45	-5.02	-
12.57													
							50.0	1938.64	-78.97	106.09	-11.45	16.28	-
27.96													
	27	78	-11.82	13.72	1.35e-03	-78.12	0.0	2480.91	-8.83	101.19	-12.13	-26.88	-
11.82													
			-36.81	-26.88	7.57e-06	0.0	25.0	2480.91	-47.89	101.19	-12.13	-6.58	-
19.43													
							50.0	2480.91	-86.95	101.19	-12.13	13.72	-
36.81													
	27	89	-15.84	-4.29	5.41e-04	-78.12	0.0	2248.47	-7.93	23.90	-7.64	-7.19	-
15.84													
			-39.33	-7.19	-2.91e-05	0.0	25.0	2248.47	-46.99	23.90	-7.64	-5.74	-
22.70													
							50.0	2248.47	-86.06	23.90	-7.64	-4.29	-
39.33													
	27	90	-15.80	-0.90	6.41e-04	-78.12	0.0	2364.16	-6.92	40.36	-8.59	-10.72	-
15.80													
			-38.78	-10.72	-3.37e-05	0.0	25.0	2364.16	-45.98	40.36	-8.59	-5.81	-
22.41													
							50.0	2364.16	-85.05	40.36	-8.59	-0.90	-
38.78													
	27	95	-22.18	-6.97	5.93e-04	-78.12	0.0	2911.02	-19.51	18.43	-8.40	-6.97	-
22.18													
			-51.46	-7.63	-2.87e-05	0.0	25.0	2911.02	-58.57	18.43	-8.40	-7.30	-
31.94													
							50.0	2911.02	-97.64	18.43	-8.40	-7.63	-
51.46													
	27	96	-22.14	-4.24	6.92e-04	-78.12	0.0	3026.71	-18.50	34.88	-9.35	-10.50	-
22.14													
			-50.91	-10.50	-3.33e-05	0.0	25.0	3026.71	-57.56	34.88	-9.35	-7.37	-
31.65													
							50.0	3026.71	-96.63	34.88	-9.35	-4.24	-
50.91													
	27	101	-15.84	-4.29	5.41e-04	-78.12	0.0	2248.47	-7.93	23.90	-7.64	-7.19	-

Viale Duca Alessandro n. 11 – 43123 Parma
Cell. 335 1403156 – E mail ing.concari@gmail.com
Sito web: studioaire.it – P.IVA 02561480340

15.84														
			-39.33	-7.19	-2.91e-05	0.0	25.0	2248.47	-46.99	23.90	-7.64	-5.74	-	
22.70														
							50.0	2248.47	-86.06	23.90	-7.64	-4.29	-	
39.33														
	27	107	-17.11	-4.96	5.51e-04	-78.12	0.0	2380.98	-10.25	22.81	-7.79	-7.15	-	
17.11														
			-41.76	-7.15	-2.90e-05	0.0	25.0	2380.98	-49.31	22.81	-7.79	-6.05	-	
24.55														
							50.0	2380.98	-88.37	22.81	-7.79	-4.96	-	
41.76														
	27	108	-17.08	-2.24	6.31e-04	-78.12	0.0	2473.53	-9.44	35.97	-8.55	-9.97	-	
17.08														
			-41.32	-9.97	-3.27e-05	0.0	25.0	2473.53	-48.50	35.97	-8.55	-6.11	-	
24.32														
							50.0	2473.53	-87.56	35.97	-8.55	-2.24	-	
41.32														
	27	111	-15.81	-1.24	6.31e-04	-78.12	0.0	2352.59	-7.02	38.71	-8.50	-10.37	-	
15.81														
			-38.84	-10.37	-3.32e-05	0.0	25.0	2352.59	-46.08	38.71	-8.50	-5.80	-	
22.44														
							50.0	2352.59	-85.15	38.71	-8.50	-1.24	-	
38.84														
	27	113	-15.84	-4.29	5.41e-04	-78.12	0.0	2248.47	-7.93	23.90	-7.64	-7.19	-	
15.84														
			-39.33	-7.19	-2.91e-05	0.0	25.0	2248.47	-46.99	23.90	-7.64	-5.74	-	
22.70														
							50.0	2248.47	-86.06	23.90	-7.64	-4.29	-	
39.33														
	27	114	-15.81	-1.58	6.21e-04	-78.12	0.0	2341.02	-7.12	37.06	-8.40	-10.02	-	
15.81														
			-38.89	-10.02	-3.27e-05	0.0	25.0	2341.02	-46.19	37.06	-8.40	-5.80	-	
22.47														
							50.0	2341.02	-85.25	37.06	-8.40	-1.58	-	
38.89														
	27	115	-15.84	-4.29	5.41e-04	-78.12	0.0	2248.47	-7.93	23.90	-7.64	-7.19	-	
15.84														
			-39.33	-7.19	-2.91e-05	0.0	25.0	2248.47	-46.99	23.90	-7.64	-5.74	-	
22.70														
							50.0	2248.47	-86.06	23.90	-7.64	-4.29	-	
39.33														
	27	116	-15.81	-1.58	6.21e-04	-78.12	0.0	2341.02	-7.12	37.06	-8.40	-10.02	-	
15.81														
			-38.89	-10.02	-3.27e-05	0.0	25.0	2341.02	-46.19	37.06	-8.40	-5.80	-	
22.47														
							50.0	2341.02	-85.25	37.06	-8.40	-1.58	-	
38.89														
	28	2	87.49	3.65	-1.37e-04	-1786.71	0.0	273.62	891.43	-19.29	-11.86	3.65	-	
21.23														
			-22.17	-18.25	-3.69e-05	0.0	24.4	273.62	-1.92	-19.29	-11.86	-7.30		
87.49														
							48.9	273.62	-895.27	-19.29	-11.86	-18.25	-	
22.17														
	28	4	87.49	3.65	-1.37e-04	-1786.71	0.0	273.62	891.43	-19.29	-11.86	3.65	-	
21.23														
			-22.17	-18.25	-3.69e-05	0.0	24.4	273.62	-1.92	-19.29	-11.86	-7.30		
87.49														
							48.9	273.62	-895.27	-19.29	-11.86	-18.25	-	
22.17														
	28	6	134.77	3.46	-1.39e-04	-2754.71	0.0	75.50	1374.87	7.76	-19.80	3.46	-	
32.96														
			-34.18	-14.20	-3.67e-05	0.0	24.4	75.50	-2.48	7.76	-19.80	-5.37		
134.77														
							48.9	75.50	-1379.84	7.76	-19.80	-14.20	-	
34.18														
	28	7	135.42	2.17	-9.55e-05	-2754.71	0.0	-85.41	1375.08	37.98	-23.99	2.17	-	
32.37														
			-33.48	-5.68	-3.26e-05	0.0	24.4	-85.41	-2.27	37.98	-23.99	-1.75		
135.42														
							48.9	-85.41	-1379.63	37.98	-23.99	-5.68	-	
33.48														
	28	15	115.08	1.63	-7.39e-05	-2342.39	0.0	-111.42	1169.31	35.46	-20.28	1.63	-	
27.61														
			-28.53	-3.44	-2.51e-05	0.0	24.4	-111.42	-1.88	35.46	-20.28	-0.90		
115.08														
							48.9	-111.42	-1173.07	35.46	-20.28	-3.44	-	
28.53														
	28	50	60.38	-3.53	-3.26e-04	-1374.39	0.0	2155.09	680.74	-57.40	-3.95	-3.53	-	
22.01														
			-25.21	-42.85	-2.68e-04	0.0	24.4	2155.09	-6.46	-57.40	-3.95	-23.19		
60.38														
							48.9	2155.09	-693.65	-57.40	-3.95	-42.85	-	
25.21														
	28	51	72.05	11.42	9.92e-05	-1374.39	0.0	-1124.31	689.59	-24.99	-6.85	11.42	-	
12.55														
			-12.55	0.05	2.16e-04	0.0	24.4	-1124.31	2.39	-24.99	-6.85	5.73		
72.05														
							48.9	-1124.31	-684.80	-24.99	-6.85	0.05	-	
11.33														
	28	53	72.22	9.36	-3.56e-04	-1374.39	0.0	-1069.03	689.92	-9.75	-9.62	9.36	-	
12.39														
			-12.39	1.84	1.20e-04	0.0	24.4	-1069.03	2.72	-9.75	-9.62	5.60		
72.22														
							48.9	-1069.03	-684.47	-9.75	-9.62	1.84	-	
11.14														
	28	56	60.20	-1.47	1.30e-04	-1374.39	0.0	2099.81	680.41	-72.64	-1.18	-1.47	-	
22.16														
			-25.41	-44.64	-1.72e-04	0.0	24.4	2099.81	-6.78	-72.64	-1.18	-23.06		

	60.20												
							48.9	2099.81	-693.98	-72.64	-1.18	-44.64	-
25.41													
	28	82	64.32	-0.15	-1.96e-04	-1374.39	0.0	1048.17	683.55	-29.68	-7.34	-0.15	-
18.76													
			-20.57	-25.64	-1.33e-04	0.0	24.4	1048.17	-3.64	-29.68	-7.34	-12.90	
	64.32												
							48.9	1048.17	-690.84	-29.68	-7.34	-25.64	-
20.57													
	28	83	70.58	5.16	5.61e-06	-1374.39	0.0	-703.13	687.98	14.25	-12.88	5.16	-
13.61													
			-13.61	1.59	7.80e-05	0.0	24.4	-703.13	0.79	14.25	-12.88	3.38	
	70.58												
							48.9	-703.13	-686.41	14.25	-12.88	1.59	-
13.21													
	28	85	70.76	4.46	-2.13e-04	-1374.39	0.0	-715.95	688.23	16.21	-13.48	4.46	-
13.47													
			-13.47	0.98	3.29e-05	0.0	24.4	-715.95	1.04	16.21	-13.48	2.72	
	70.76												
							48.9	-715.95	-686.15	16.21	-13.48	0.98	-
13.00													
	28	88	64.15	0.56	2.20e-05	-1374.39	0.0	1060.98	683.30	-31.64	-6.74	0.56	-
18.91													
			-20.78	-25.03	-8.77e-05	0.0	24.4	1060.98	-3.89	-31.64	-6.74	-12.24	
	64.15												
							48.9	1060.98	-691.09	-31.64	-6.74	-25.03	-
20.78													
	28	90	67.37	2.68	-1.01e-04	-1374.39	0.0	193.97	685.74	-11.74	-9.55	2.68	-
16.27													
			-16.98	-13.16	-2.79e-05	0.0	24.4	193.97	-1.45	-11.74	-9.55	-5.24	
	67.37												
							48.9	193.97	-688.65	-11.74	-9.55	-13.16	-
16.98													
	28	92	67.37	2.68	-1.01e-04	-1374.39	0.0	193.97	685.74	-11.74	-9.55	2.68	-
16.27													
			-16.98	-13.16	-2.79e-05	0.0	24.4	193.97	-1.45	-11.74	-9.55	-5.24	
	67.37												
							48.9	193.97	-688.65	-11.74	-9.55	-13.16	-
16.98													
	28	94	98.89	2.55	-1.02e-04	-2019.72	0.0	61.89	1008.03	6.29	-14.84	2.55	-
24.09													
			-24.99	-10.46	-2.78e-05	0.0	24.4	61.89	-1.83	6.29	-14.84	-3.96	
	98.89												
							48.9	61.89	-1011.69	6.29	-14.84	-10.46	-
24.99													
	28	95	99.32	1.69	-7.33e-05	-2019.72	0.0	-45.38	1008.17	26.44	-17.64	1.69	-
23.70													
			-24.53	-4.79	-2.51e-05	0.0	24.4	-45.38	-1.69	26.44	-17.64	-1.55	
	99.32												
							48.9	-45.38	-1011.55	26.44	-17.64	-4.79	-
24.53													
	28	106	73.76	2.48	-9.56e-05	-1503.46	0.0	146.10	750.23	-4.11	-11.17	2.48	-
17.75													
			-18.49	-11.49	-2.74e-05	0.0	24.4	146.10	-1.50	-4.11	-11.17	-4.50	
	73.76												
							48.9	146.10	-753.23	-4.11	-11.17	-11.49	-
18.49													
	28	107	74.10	1.80	-7.23e-05	-1503.46	0.0	60.28	750.34	12.01	-13.40	1.80	-
17.44													
			-18.12	-6.94	-2.52e-05	0.0	24.4	60.28	-1.39	12.01	-13.40	-2.57	
	74.10												
							48.9	60.28	-753.12	12.01	-13.40	-6.94	-
18.12													
	28	111	67.41	2.59	-9.83e-05	-1374.39	0.0	183.25	685.75	-9.73	-9.83	2.59	-
16.23													
			-16.93	-12.59	-2.77e-05	0.0	24.4	183.25	-1.44	-9.73	-9.83	-5.00	
	67.41												
							48.9	183.25	-688.64	-9.73	-9.83	-12.59	-
16.93													
	28	112	67.41	2.59	-9.83e-05	-1374.39	0.0	183.25	685.75	-9.73	-9.83	2.59	-
16.23													
			-16.93	-12.59	-2.77e-05	0.0	24.4	183.25	-1.44	-9.73	-9.83	-5.00	
	67.41												
							48.9	183.25	-688.64	-9.73	-9.83	-12.59	-
16.93													
	28	114	67.45	2.51	-9.54e-05	-1374.39	0.0	172.52	685.77	-7.71	-10.11	2.51	-
16.19													
			-16.89	-12.03	-2.74e-05	0.0	24.4	172.52	-1.43	-7.71	-10.11	-4.76	
	67.45												
							48.9	172.52	-688.62	-7.71	-10.11	-12.03	-
16.89													
	28	115	67.80	1.82	-7.21e-05	-1374.39	0.0	86.70	685.88	8.40	-12.34	1.82	-
15.87													
			-16.52	-7.48	-2.52e-05	0.0	24.4	86.70	-1.32	8.40	-12.34	-2.83	
	67.80												
							48.9	86.70	-688.51	8.40	-12.34	-7.48	-
16.52													
	28	116	67.45	2.51	-9.54e-05	-1374.39	0.0	172.52	685.77	-7.71	-10.11	2.51	-
16.19													
			-16.89	-12.03	-2.74e-05	0.0	24.4	172.52	-1.43	-7.71	-10.11	-4.76	
	67.45												
							48.9	172.52	-688.62	-7.71	-10.11	-12.03	-
16.89													
	29	2	3.18	32.88	8.63e-04	-101.56	0.0	800.18	51.70	-85.10	21.92	32.88	-
3.41													
			-3.41	15.43	-4.25e-05	0.0	25.0	800.18	0.92	-85.10	21.92	24.15 3.18	
							50.0	800.18	-49.86	-85.10	21.92	15.43	-
2.94													

Viale Duca Alessandro n. 11 – 43123 Parma
Cell. 335 1403156 – E mail ing.concari@gmail.com
Sito web: studioaire.it – P.IVA 02561480340

	29	7	0.33	29.56	7.81e-04	-101.56	0.0	1315.78	51.51	-73.85	16.15	29.56	-
6.20													
			-6.20	11.26	-3.66e-05	0.0	25.0	1315.78	0.72	-73.85	16.15	20.41	0.33
							50.0	1315.78	-50.06	-73.85	16.15	11.26	-
5.83													
	29	8	0.69	36.29	9.37e-04	-101.56	0.0	1231.23	51.65	-93.43	21.23	36.29	-
5.88													
			-5.88	14.04	-4.21e-05	0.0	25.0	1231.23	0.86	-93.43	21.23	25.17	0.69
							50.0	1231.23	-49.92	-93.43	21.23	14.04	-
5.43													
	29	10	2.53	26.84	7.00e-04	-78.12	0.0	596.02	39.80	-69.98	18.04	26.84	-
2.55													
			-2.55	12.51	-3.39e-05	0.0	25.0	596.02	0.74	-69.98	18.04	19.68	2.53
							50.0	596.02	-38.32	-69.98	18.04	12.51	-
2.17													
	29	15	-0.32	23.53	6.18e-04	-78.12	0.0	1111.61	39.61	-58.73	12.26	23.53	-
5.34													
			-5.34	8.34	-2.80e-05	0.0	25.0	1111.61	0.54	-58.73	12.26	15.94	-
0.32													
							50.0	1111.61	-38.52	-58.73	12.26	8.34	-
5.06													
	29	29	7.14	14.99	8.80e-05	-78.12	0.0	-169.40	40.40	-50.04	18.36	14.99	2.04
			2.04	10.27	-2.65e-04	0.0	25.0	-169.40	1.34	-50.04	18.36	12.63	7.14
							50.0	-169.40	-37.72	-50.04	18.36	10.27	2.47
	29	32	-1.88	43.97	1.31e-03	-78.12	0.0	1343.50	39.45	-83.48	22.29	43.97	-
6.99													
			-6.99	28.06	1.81e-04	0.0	25.0	1343.50	0.39	-83.48	22.29	36.01	-
1.88													
							50.0	1343.50	-38.67	-83.48	22.29	28.06	-
6.54													
	29	33	7.40	13.71	8.25e-05	-78.12	0.0	-132.85	40.26	-44.80	16.26	13.71	2.20
			2.20	12.62	-1.01e-04	0.0	25.0	-132.85	1.20	-44.80	16.26	13.16	7.40
							50.0	-132.85	-37.86	-44.80	16.26	12.62	2.83
	29	36	-2.15	45.25	1.31e-03	-78.12	0.0	1306.95	39.60	-88.72	24.39	45.25	-
7.16													
			-7.16	25.71	1.65e-05	0.0	25.0	1306.95	0.53	-88.72	24.39	35.48	-
2.15													
							50.0	1306.95	-38.53	-88.72	24.39	25.71	-
6.90													
	29	40	-1.95	45.36	1.29e-03	-78.12	0.0	1321.47	39.69	-90.19	24.60	45.36	-
7.12													
			-7.12	25.09	-1.61e-04	0.0	25.0	1321.47	0.63	-90.19	24.60	35.22	-
1.95													
							50.0	1321.47	-38.44	-90.19	24.60	25.09	-
6.55													
	29	50	3.46	32.57	2.87e-03	-78.12	0.0	325.55	41.47	-110.09	26.10	32.57	-
2.48													
			-2.48	-4.82	-3.75e-04	0.0	25.0	325.55	2.41	-110.09	26.10	13.87	3.41
							50.0	325.55	-36.65	-110.09	26.10	-4.82	-
0.46													
	29	58	4.19	21.20	9.34e-04	-78.12	0.0	284.55	40.35	-60.64	18.12	21.20	-
1.02													
			-1.02	8.41	-1.23e-04	0.0	25.0	284.55	1.29	-60.64	18.12	14.81	4.19
							50.0	284.55	-37.77	-60.64	18.12	8.41	-
0.37													
	29	59	0.53	26.21	3.20e-04	-78.12	0.0	986.40	39.12	-61.04	13.21	26.21	-
4.38													
			-4.38	14.02	5.99e-05	0.0	25.0	986.40	0.06	-61.04	13.21	20.11	0.53
							50.0	986.40	-39.01	-61.04	13.21	14.02	-
4.33													
	29	65	4.46	17.61	3.19e-04	-78.12	0.0	329.37	39.96	-44.73	14.75	17.61	-
0.65													
			-0.65	13.24	-6.28e-05	0.0	25.0	329.37	0.90	-44.73	14.75	15.43	4.46
							50.0	329.37	-38.17	-44.73	14.75	13.24	-
0.18													
	29	68	0.25	29.79	9.36e-04	-78.12	0.0	941.57	39.51	-76.95	16.58	29.79	-
4.75													
			-4.75	9.19	0.0	0.0	25.0	941.57	0.45	-76.95	16.58	19.49	0.25
							50.0	941.57	-38.61	-76.95	16.58	9.19	-
4.52													
	29	82	2.82	27.61	1.63e-03	-78.12	0.0	497.37	40.50	-82.57	20.28	27.61	-
2.61													
			-2.61	4.14	-1.83e-04	0.0	25.0	497.37	1.44	-82.57	20.28	15.88	2.82
							50.0	497.37	-37.63	-82.57	20.28	4.14	-
1.51													
	29	88	1.64	30.19	1.63e-03	-78.12	0.0	694.48	40.25	-87.46	19.82	30.19	-
3.73													
			-3.73	4.38	-1.46e-04	0.0	25.0	694.48	1.18	-87.46	19.82	17.28	1.64
							50.0	694.48	-37.88	-87.46	19.82	4.38	-
2.76													
	29	90	2.41	24.60	6.48e-04	-78.12	0.0	624.20	39.75	-63.45	16.34	24.60	-
2.66													
			-2.66	11.59	-3.21e-05	0.0	25.0	624.20	0.69	-63.45	16.34	18.09	2.41
							50.0	624.20	-38.37	-63.45	16.34	11.59	-
2.30													
	29	95	0.51	22.39	5.93e-04	-78.12	0.0	967.93	39.63	-55.95	12.49	22.39	-
4.52													
			-4.52	8.81	-2.82e-05	0.0	25.0	967.93	0.56	-55.95	12.49	15.60	0.51
							50.0	967.93	-38.50	-55.95	12.49	8.81	-
4.23													
	29	96	0.75	26.88	6.97e-04	-78.12	0.0	911.56	39.72	-69.01	15.88	26.88	-
4.30													
			-4.30	10.66	-3.18e-05	0.0	25.0	911.56	0.66	-69.01	15.88	18.77	0.75
							50.0	911.56	-38.41	-69.01	15.88	10.66	-
3.96													
	29	107	1.83	20.57	5.54e-04	-78.12	0.0	738.04	39.65	-51.51	12.86	20.57	-
3.20													
			-3.20	9.55	-2.84e-05	0.0	25.0	738.04	0.59	-51.51	12.86	15.06	1.83

Viale Duca Alessandro n. 11 – 43123 Parma
Cell. 335 1403156 – E mail ing.concari@gmail.com
Sito web: studioaire.it – P.IVA 02561480340

							50.0	738.04	-38.47	-51.51	12.86	9.55	-	2.90
29	108	2.03	24.16	6.37e-04	-78.12		0.0	692.94	39.73	-61.95	15.57	24.16	-	3.03
		-3.03	11.03	-3.13e-05	0.0		25.0	692.94	0.67	-61.95	15.57	17.59	2.03	
							50.0	692.94	-38.40	-61.95	15.57	11.03	-	2.68
29	111	2.38	24.15	6.38e-04	-78.12		0.0	629.83	39.74	-62.15	16.00	24.15	-	2.68
		-2.68	11.40	-3.17e-05	0.0		25.0	629.83	0.68	-62.15	16.00	17.78	2.38	
							50.0	629.83	-38.38	-62.15	16.00	11.40	-	2.33
29	114	2.36	23.70	6.27e-04	-78.12		0.0	635.47	39.74	-60.84	15.67	23.70	-	2.70
		-2.70	11.22	-3.14e-05	0.0		25.0	635.47	0.67	-60.84	15.67	17.46	2.36	
							50.0	635.47	-38.39	-60.84	15.67	11.22	-	2.35
29	115	2.16	20.11	5.44e-04	-78.12		0.0	680.56	39.66	-50.40	12.96	20.11	-	2.87
		-2.87	9.73	-2.84e-05	0.0		25.0	680.56	0.60	-50.40	12.96	14.92	2.16	
							50.0	680.56	-38.46	-50.40	12.96	9.73	-	2.56
29	116	2.36	23.70	6.27e-04	-78.12		0.0	635.47	39.74	-60.84	15.67	23.70	-	2.70
		-2.70	11.22	-3.14e-05	0.0		25.0	635.47	0.67	-60.84	15.67	17.46	2.36	
							50.0	635.47	-38.39	-60.84	15.67	11.22	-	2.35
30	4	91.29	40.42	-1.49e-04	-1786.71		0.0	-981.45	893.78	127.92	-10.56	-9.27	-	18.00
		-18.00	-9.27	-4.09e-05	0.0		24.4	-981.45	0.42	127.92	-10.56	15.58		91.29
							48.9	-981.45	-892.93	127.92	-10.56	40.42	-	17.79
30	5	137.34	23.17	-1.04e-04	-2754.71		0.0	-886.13	1376.95	56.34	0.35	-4.29	-	30.90
		-31.10	-4.29	-3.57e-05	0.0		24.4	-886.13	-0.40	56.34	0.35	9.44		137.34
							48.9	-886.13	-1377.75	56.34	0.35	23.17	-	31.10
30	8	138.34	37.71	-1.51e-04	-2754.71		0.0	-1216.31	1377.33	111.45	-5.59	-9.54	-	30.00
		-30.01	-9.54	-4.11e-05	0.0		24.4	-1216.31	-0.02	111.45	-5.59	14.09		138.34
							48.9	-1216.31	-1377.38	111.45	-5.59	37.71	-	30.01
30	9	69.46	19.90	-7.86e-05	-1374.39		0.0	-500.97	687.23	56.01	-3.55	-3.09	-	14.54
		-14.54	-3.09	-2.73e-05	0.0		24.4	-500.97	0.03	56.01	-3.55	8.41		69.46
							48.9	-500.97	-687.16	56.01	-3.55	19.90	-	14.53
30	50	78.65	79.73	-3.56e-04	-1374.39		0.0	-3389.90	689.29	387.98	-19.26	-101.74	-	5.89
		-5.89	-101.74	-2.90e-04	0.0		24.4	-3389.90	2.10	387.98	-19.26	-11.01		78.65
							48.9	-3389.90	-685.10	387.98	-19.26	79.73	-	4.80
30	51	64.22	67.70	1.02e-04	-1374.39		0.0	970.20	686.11	-36.68	-11.76	67.70	-	19.47
		-20.06	20.17	2.27e-04	0.0		24.4	970.20	-1.08	-36.68	-11.76	43.94		64.22
							48.9	970.20	-688.28	-36.68	-11.76	20.17	-	20.06
30	52	78.25	85.84	8.13e-05	-1374.39		0.0	-3409.05	689.69	413.83	-21.12	-108.10	-	6.31
		-6.31	-108.10	-7.10e-05	0.0		24.4	-3409.05	2.50	413.83	-21.12	-11.13		78.25
							48.9	-3409.05	-684.70	413.83	-21.12	85.84	-	5.16
30	53	64.60	70.12	-3.50e-04	-1374.39		0.0	992.02	685.86	-48.92	-9.67	70.12	-	19.06
		-19.72	16.61	1.26e-04	0.0		24.4	992.02	-1.33	-48.92	-9.67	43.36		64.60
							48.9	992.02	-688.53	-48.92	-9.67	16.61	-	19.72
30	56	78.27	83.30	9.60e-05	-1374.39		0.0	-3411.72	689.54	400.23	-21.35	-104.16	-	6.30
		-6.30	-104.16	-1.89e-04	0.0		24.4	-3411.72	2.35	400.23	-21.35	-10.43		78.27
							48.9	-3411.72	-684.85	400.23	-21.35	83.30	-	5.15
30	82	73.81	50.59	-2.15e-04	-1374.39		0.0	-1873.50	688.25	218.69	-12.25	-48.12	-	10.45
		-10.45	-48.12	-1.44e-04	0.0		24.4	-1873.50	1.06	218.69	-12.25	1.23		73.81
							48.9	-1873.50	-686.14	218.69	-12.25	50.59	-	9.91
30	83	66.17	36.34	7.01e-06	-1374.39		0.0	519.36	686.61	-47.89	-1.19	36.34	-	17.66
		-17.98	4.73	8.34e-05	0.0		24.4	519.36	-0.59	-47.89	-1.19	20.54		66.17
							48.9	519.36	-687.78	-47.89	-1.19	4.73	-	17.98
30	84	73.61	53.29	-5.37e-06	-1374.39		0.0	-1892.99	688.31	232.31	-12.96	-52.09	-	10.64
		-10.64	-52.09	-4.54e-05	0.0		24.4	-1892.99	1.12	232.31	-12.96	0.60		73.61
							48.9	-1892.99	-686.08	232.31	-12.96	53.29	-	

Viale Duca Alessandro n. 11 – 43123 Parma
Cell. 335 1403156 – E mail ing.concari@gmail.com
Sito web: studioaire.it – P.IVA 02561480340

10.12													
	30	85	66.37	38.58	-2.10e-04	-1374.39	0.0	540.04	686.62	-55.56	-0.38	38.58	-
17.48													
			-17.77	3.13	3.68e-05	0.0	24.4	540.04	-0.58	-55.56	-0.38	20.86	
66.37													
							48.9	540.04	-687.77	-55.56	-0.38	3.13	-
17.77													
	30	88	73.61	52.18	2.25e-06	-1374.39	0.0	-1894.18	688.25	226.36	-13.06	-50.37	-
10.63													
			-10.63	-50.37	-9.73e-05	0.0	24.4	-1894.18	1.05	226.36	-13.06	0.91	
73.61													
							48.9	-1894.18	-686.14	226.36	-13.06	52.18	-
10.12													
	30	89	69.46	19.90	-7.86e-05	-1374.39	0.0	-500.97	687.23	56.01	-3.55	-3.09	-
14.54													
			-14.54	-3.09	-2.73e-05	0.0	24.4	-500.97	0.03	56.01	-3.55	8.41	
69.46													
							48.9	-500.97	-687.16	56.01	-3.55	19.90	-
14.53													
	30	92	70.12	29.60	-1.10e-04	-1374.39	0.0	-721.09	687.48	92.75	-7.51	-6.59	-
13.94													
			-13.94	-6.59	-3.09e-05	0.0	24.4	-721.09	0.29	92.75	-7.51	11.50	
70.12													
							48.9	-721.09	-686.91	92.75	-7.51	29.60	-
13.80													
	30	93	100.82	18.10	-7.95e-05	-2019.72	0.0	-657.55	1009.60	45.03	-0.24	-3.27	-
22.54													
			-22.67	-3.27	-2.75e-05	0.0	24.4	-657.55	-0.26	45.03	-0.24	7.41	
100.82													
							48.9	-657.55	-1010.12	45.03	-0.24	18.10	-
22.67													
	30	96	101.49	27.80	-1.11e-04	-2019.72	0.0	-877.67	1009.85	81.77	-4.20	-6.77	-
21.94													
			-21.94	-6.77	-3.11e-05	0.0	24.4	-877.67	-0.01	81.77	-4.20	10.51	
101.49													
							48.9	-877.67	-1009.87	81.77	-4.20	27.80	-
21.94													
	30	101	69.46	19.90	-7.86e-05	-1374.39	0.0	-500.97	687.23	56.01	-3.55	-3.09	-
14.54													
			-14.54	-3.09	-2.73e-05	0.0	24.4	-500.97	0.03	56.01	-3.55	8.41	
69.46													
							48.9	-500.97	-687.16	56.01	-3.55	19.90	-
14.53													
	30	105	75.73	19.54	-7.87e-05	-1503.46	0.0	-532.29	751.70	53.81	-2.88	-3.13	-
16.14													
			-16.16	-3.13	-2.74e-05	0.0	24.4	-532.29	-0.03	53.81	-2.88	8.21	
75.73													
							48.9	-532.29	-751.75	53.81	-2.88	19.54	-
16.16													
	30	108	76.26	27.30	-1.04e-04	-1503.46	0.0	-708.39	751.90	83.20	-6.06	-5.93	-
15.66													
			-15.66	-5.93	-3.02e-05	0.0	24.4	-708.39	0.18	83.20	-6.06	10.69	
76.26													
							48.9	-708.39	-751.55	83.20	-6.06	27.30	-
15.57													
	30	112	70.06	28.63	-1.07e-04	-1374.39	0.0	-699.08	687.46	89.07	-7.11	-6.24	-
14.00													
			-14.00	-6.24	-3.06e-05	0.0	24.4	-699.08	0.26	89.07	-7.11	11.19	
70.06													
							48.9	-699.08	-686.93	89.07	-7.11	28.63	-
13.87													
	30	113	69.46	19.90	-7.86e-05	-1374.39	0.0	-500.97	687.23	56.01	-3.55	-3.09	-
14.54													
			-14.54	-3.09	-2.73e-05	0.0	24.4	-500.97	0.03	56.01	-3.55	8.41	
69.46													
							48.9	-500.97	-687.16	56.01	-3.55	19.90	-
14.53													
	30	116	69.99	27.66	-1.04e-04	-1374.39	0.0	-677.07	687.43	85.40	-6.72	-5.89	-
14.06													
			-14.06	-5.89	-3.02e-05	0.0	24.4	-677.07	0.24	85.40	-6.72	10.88	
69.99													
							48.9	-677.07	-686.96	85.40	-6.72	27.66	-
13.94													
	31	1	-48.47	0.18	6.91e-04	-101.56	0.0	3143.34	32.74	32.73	-4.97	-10.33	-
51.10													
			-60.11	-10.33	-3.96e-05	0.0	25.0	3143.34	-18.04	32.73	-4.97	-5.08	-
49.26													
							50.0	3143.34	-68.82	32.73	-4.97	0.18	-
60.11													
	31	7	-66.61	0.07	7.64e-04	-101.56	0.0	4188.41	33.03	44.37	-5.23	-15.79	-
69.30													
			-78.16	-15.79	-4.01e-05	0.0	25.0	4188.41	-17.75	44.37	-5.23	-7.86	-
67.38													
							50.0	4188.41	-68.53	44.37	-5.23	0.07	-
78.16													
	31	8	-66.71	-0.98	9.13e-04	-101.56	0.0	4260.21	26.70	34.06	-5.72	-11.35	-
68.47													
			-80.49	-11.35	-4.62e-05	0.0	25.0	4260.21	-24.08	34.06	-5.72	-6.17	-
68.13													
							50.0	4260.21	-74.87	34.06	-5.72	-0.98	-
80.49													
	31	9	-37.28	0.14	5.31e-04	-78.12	0.0	2417.96	25.18	25.18	-3.82	-7.94	-
39.31													
			-46.24	-7.94	-3.05e-05	0.0	25.0	2417.96	-13.88	25.18	-3.82	-3.90	-
37.89													
							50.0	2417.96	-52.94	25.18	-3.82	0.14	-
46.24													
	31	28	-6.96	17.36	1.25e-03	-78.12	0.0	1162.10	-3.62	-23.10	-5.12	17.36	-

Viale Duca Alessandro n. 11 – 43123 Parma
Cell. 335 1403156 – E mail ing.concari@gmail.com
Sito web: studioaire.it – P.IVA 02561480340

6.96			-28.07	1.79	3.57e-04	0.0	25.0	1162.10	-42.69	-23.10	-5.12	9.57	-
12.63							50.0	1162.10	-81.75	-23.10	-5.12	1.79	-
28.07	31	34	-67.00	-3.72	1.26e-03	-78.12	0.0	4467.54	7.70	4.04	0.19	-3.72	-
67.13			-83.43	-6.93	9.97e-05	0.0	25.0	4467.54	-31.36	4.04	0.19	-5.32	-
70.39							50.0	4467.54	-70.42	4.04	0.19	-6.93	-
83.43	31	35	-11.57	4.57	9.99e-05	-78.12	0.0	792.58	30.42	26.95	-8.89	-4.33	-
14.77			-18.45	-4.33	-1.89e-04	0.0	25.0	792.58	-8.64	26.95	-8.89	0.12	-
11.72							50.0	792.58	-47.70	26.95	-8.89	4.57	-
18.45	31	41	-42.96	2.30	-1.08e-03	-78.12	0.0	2378.24	56.38	90.96	-12.24	-37.36	-
54.07			-54.07	-37.36	-4.65e-04	0.0	25.0	2378.24	17.32	90.96	-12.24	-17.53	-
44.22							50.0	2378.24	-21.75	90.96	-12.24	2.30	-
44.15	31	44	-16.24	40.79	2.75e-03	-78.12	0.0	2471.97	-32.43	-84.20	2.60	40.79	-
16.24			-53.21	-5.83	3.94e-04	0.0	25.0	2471.97	-71.49	-84.20	2.60	17.48	-
29.84							50.0	2471.97	-110.55	-84.20	2.60	-5.83	-
53.21	31	60	-21.40	5.15	8.99e-04	-78.12	0.0	1712.39	10.43	0.08	-4.52	5.15	-
21.76			-35.99	0.89	1.48e-04	0.0	25.0	1712.39	-28.63	0.08	-4.52	3.02	-
23.99							50.0	1712.39	-67.70	0.08	-4.52	0.89	-
35.99	31	66	-50.53	-3.29	9.01e-04	-78.12	0.0	3339.63	15.61	12.79	-2.19	-4.73	-
51.25			-63.27	-4.73	2.49e-05	0.0	25.0	3339.63	-23.46	12.79	-2.19	-4.01	-
52.38							50.0	3339.63	-62.52	12.79	-2.19	-3.29	-
63.27	31	67	-23.87	2.44	3.21e-04	-78.12	0.0	1572.87	28.01	26.57	-5.99	-6.42	-
26.49			-31.71	-6.42	-9.25e-05	0.0	25.0	1572.87	-11.05	26.57	-5.99	-1.99	-
24.22							50.0	1572.87	-50.12	26.57	-5.99	2.44	-
31.71	31	73	-42.76	1.85	-3.48e-04	-78.12	0.0	2499.93	45.75	65.74	-7.04	-26.22	-
49.82			-49.82	-26.22	-2.25e-04	0.0	25.0	2499.93	6.68	65.74	-7.04	-12.18	-
42.95							50.0	2499.93	-32.38	65.74	-7.04	1.85	-
45.85	31	76	-27.92	15.07	1.57e-03	-78.12	0.0	2412.57	-2.13	-26.38	-1.14	15.07	-
27.92			-49.13	-2.70	1.57e-04	0.0	25.0	2412.57	-41.19	-26.38	-1.14	6.18	-
33.64							50.0	2412.57	-80.26	-26.38	-1.14	-2.70	-
49.13	31	89	-37.28	0.14	5.31e-04	-78.12	0.0	2417.96	25.18	25.18	-3.82	-7.94	-
39.31			-46.24	-7.94	-3.05e-05	0.0	25.0	2417.96	-13.88	25.18	-3.82	-3.90	-
37.89							50.0	2417.96	-52.94	25.18	-3.82	0.14	-
46.24	31	95	-49.38	0.06	5.80e-04	-78.12	0.0	3114.67	25.38	32.94	-3.99	-11.59	-
51.44			-58.27	-11.59	-3.08e-05	0.0	25.0	3114.67	-13.69	32.94	-3.99	-5.76	-
49.97							50.0	3114.67	-52.75	32.94	-3.99	0.06	-
58.27	31	96	-49.46	-0.64	6.80e-04	-78.12	0.0	3162.53	21.16	26.07	-4.33	-8.63	-
50.89			-59.83	-8.63	-3.49e-05	0.0	25.0	3162.53	-17.91	26.07	-4.33	-4.63	-
50.48							50.0	3162.53	-56.97	26.07	-4.33	-0.64	-
59.83	31	101	-37.28	0.14	5.31e-04	-78.12	0.0	2417.96	25.18	25.18	-3.82	-7.94	-
39.31			-46.24	-7.94	-3.05e-05	0.0	25.0	2417.96	-13.88	25.18	-3.82	-3.90	-
37.89							50.0	2417.96	-52.94	25.18	-3.82	0.14	-
46.24	31	107	-39.70	0.12	5.41e-04	-78.12	0.0	2557.30	25.22	26.73	-3.86	-8.67	-
41.74			-48.65	-8.67	-3.06e-05	0.0	25.0	2557.30	-13.84	26.73	-3.86	-4.28	-
40.31							50.0	2557.30	-52.90	26.73	-3.86	0.12	-
48.65	31	108	-39.78	-0.44	6.21e-04	-78.12	0.0	2595.59	21.85	21.23	-4.12	-6.30	-
41.30			-49.89	-6.30	-3.39e-05	0.0	25.0	2595.59	-17.22	21.23	-4.12	-3.37	-
40.71							50.0	2595.59	-56.28	21.23	-4.12	-0.44	-
49.89	31	113	-37.28	0.14	5.31e-04	-78.12	0.0	2417.96	25.18	25.18	-3.82	-7.94	-
39.31			-46.24	-7.94	-3.05e-05	0.0	25.0	2417.96	-13.88	25.18	-3.82	-3.90	-

Viale Duca Alessandro n. 11 – 43123 Parma
Cell. 335 1403156 – E mail ing.concari@gmail.com
Sito web: studioaire.it – P.IVA 02561480340

37.89															
							50.0	2417.96	-52.94	25.18	-3.82	0.14	-		
46.24	31	115	-37.28	0.14	5.31e-04	-78.12	0.0	2417.96	25.18	25.18	-3.82	-7.94	-		
39.31			-46.24	-7.94	-3.05e-05	0.0	25.0	2417.96	-13.88	25.18	-3.82	-3.90	-		
37.89															
							50.0	2417.96	-52.94	25.18	-3.82	0.14	-		
46.24	31	116	-37.36	-0.43	6.11e-04	-78.12	0.0	2456.25	21.81	19.68	-4.09	-5.57	-		
38.87			-47.49	-5.57	-3.38e-05	0.0	25.0	2456.25	-17.25	19.68	-4.09	-3.00	-		
38.30															
							50.0	2456.25	-56.32	19.68	-4.09	-0.43	-		
47.49	32	2	87.15	14.65	-1.38e-04	-1786.71	0.0	64.00	893.92	120.73	-15.12	-26.09	-		
22.17			-22.17	-26.09	-4.17e-05	0.0	24.4	64.00	0.57	120.73	-15.12	-5.72			
87.15															
							48.9	64.00	-892.78	120.73	-15.12	14.65	-		
21.90	32	6	134.19	16.79	-1.39e-04	-2754.71	0.0	-63.80	1377.49	137.95	-20.89	-25.88	-		
34.18			-34.18	-25.88	-4.14e-05	0.0	24.4	-63.80	0.14	137.95	-20.89	-4.55			
134.19															
							48.9	-63.80	-1377.21	137.95	-20.89	16.79	-		
34.12	32	7	134.78	16.34	-9.54e-05	-2754.71	0.0	-195.94	1377.06	125.78	-22.45	-18.94	-		
33.49			-33.63	-18.94	-3.60e-05	0.0	24.4	-195.94	-0.29	125.78	-22.45	-1.30			
134.78															
							48.9	-195.94	-1377.65	125.78	-22.45	16.34	-		
33.63	32	10	66.90	11.37	-1.16e-04	-1374.39	0.0	79.72	687.73	95.68	-11.27	-21.67	-		
17.22			-17.22	-21.67	-3.33e-05	0.0	24.4	79.72	0.54	95.68	-11.27	-5.15			
66.90															
							48.9	79.72	-686.66	95.68	-11.27	11.37	-		
16.96	32	50	60.04	-7.77	-3.26e-04	-1374.39	0.0	2473.00	692.43	110.35	-9.79	-47.21	-		
25.22			-25.22	-47.21	-2.77e-04	0.0	24.4	2473.00	5.24	110.35	-9.79	-27.49			
60.04															
							48.9	2473.00	-681.96	110.35	-9.79	-7.77	-		
22.69	32	51	71.74	26.17	9.87e-05	-1374.39	0.0	-1555.37	683.40	82.36	-9.63	-4.43	-		
11.34			-13.17	-4.43	2.15e-04	0.0	24.4	-1555.37	-3.80	82.36	-9.63	10.87			
71.74															
							48.9	-1555.37	-690.99	82.36	-9.63	26.17	-		
13.17	32	53	71.95	25.49	-3.54e-04	-1374.39	0.0	-1461.35	683.59	77.97	-12.45	-3.26	-		
11.15			-12.93	-3.26	1.17e-04	0.0	24.4	-1461.35	-3.60	77.97	-12.45	11.12			
71.95															
							48.9	-1461.35	-690.79	77.97	-12.45	25.49	-		
12.93	32	56	59.82	-7.09	1.27e-04	-1374.39	0.0	2378.99	692.24	114.73	-6.97	-48.39	-		
25.41			-25.41	-48.39	-1.78e-04	0.0	24.4	2378.99	5.04	114.73	-6.97	-27.74			
59.82															
							48.9	2378.99	-682.15	114.73	-6.97	-7.09	-		
22.92	32	82	64.02	2.80	-1.97e-04	-1374.39	0.0	1101.94	689.70	98.94	-10.97	-31.11	-		
20.57			-20.57	-31.11	-1.39e-04	0.0	24.4	1101.94	2.50	98.94	-10.97	-14.15			
64.02															
							48.9	1101.94	-684.69	98.94	-10.97	2.80	-		
19.36	32	85	70.58	20.22	-2.12e-04	-1374.39	0.0	-1114.68	685.55	83.74	-14.24	-6.45	-		
13.00			-13.82	-6.45	3.07e-05	0.0	24.4	-1114.68	-1.64	83.74	-14.24	6.88			
70.58															
							48.9	-1114.68	-688.83	83.74	-14.24	20.22	-		
13.82	32	88	63.78	2.10	2.04e-05	-1374.39	0.0	1150.79	689.51	96.26	-9.75	-30.41	-		
20.78			-20.78	-30.41	-9.23e-05	0.0	24.4	1150.79	2.31	96.26	-9.75	-14.15			
63.78															
							48.9	1150.79	-684.88	96.26	-9.75	2.10	-		
19.64	32	90	67.10	11.22	-1.01e-04	-1374.39	0.0	35.68	687.59	91.62	-11.79	-19.36	-		
16.98			-16.98	-19.36	-3.15e-05	0.0	24.4	35.68	0.39	91.62	-11.79	-4.07			
67.10															
							48.9	35.68	-686.80	91.62	-11.79	11.22	-		
16.79	32	94	98.46	12.65	-1.02e-04	-2019.72	0.0	-49.52	1009.97	103.10	-15.64	-19.22	-		
24.99			-24.99	-19.22	-3.13e-05	0.0	24.4	-49.52	0.11	103.10	-15.64	-3.28			
98.46															
							48.9	-49.52	-1009.75	103.10	-15.64	12.65	-		
24.94	32	95	98.85	12.35	-7.32e-05	-2019.72	0.0	-137.62	1009.68	94.99	-16.68	-14.59	-		
24.53			-24.62	-14.59	-2.77e-05	0.0	24.4	-137.62	-0.18	94.99	-16.68	-1.12			
98.85															
							48.9	-137.62	-1010.04	94.99	-16.68	12.35	-		

Viale Duca Alessandro n. 11 – 43123 Parma
Cell. 335 1403156 – E mail ing.concari@gmail.com
Sito web: studioaire.it – P.IVA 02561480340

24.62														
	32	106	73.45	11.45	-9.58e-05	-1503.46	0.0	1.02	752.01	92.29	-12.77	-18.40	-	
18.49														
			-18.49	-18.40	-3.08e-05	0.0	24.4	1.02	0.28	92.29	-12.77	-3.48		
73.45														
							48.9	1.02	-751.45	92.29	-12.77	11.45	-	
18.36														
	32	107	73.77	11.21	-7.24e-05	-1503.46	0.0	-69.46	751.77	85.80	-13.60	-14.70	-	
18.12														
			-18.12	-14.70	-2.79e-05	0.0	24.4	-69.46	0.05	85.80	-13.60	-1.75		
73.77														
							48.9	-69.46	-751.68	85.80	-13.60	11.21	-	
18.10														
	32	111	67.14	11.19	-9.85e-05	-1374.39	0.0	26.87	687.56	90.81	-11.89	-18.89	-	
16.94														
			-16.94	-18.89	-3.12e-05	0.0	24.4	26.87	0.36	90.81	-11.89	-3.85		
67.14														
							48.9	26.87	-686.83	90.81	-11.89	11.19	-	
16.76														
	32	114	67.18	11.16	-9.56e-05	-1374.39	0.0	18.06	687.53	90.00	-12.00	-18.43	-	
16.89														
			-16.89	-18.43	-3.08e-05	0.0	24.4	18.06	0.34	90.00	-12.00	-3.63		
67.18														
							48.9	18.06	-686.86	90.00	-12.00	11.16	-	
16.73														
	32	115	67.50	10.92	-7.22e-05	-1374.39	0.0	-52.42	687.30	83.51	-12.83	-14.72	-	
16.52														
			-16.52	-14.72	-2.79e-05	0.0	24.4	-52.42	0.10	83.51	-12.83	-1.90		
67.50														
							48.9	-52.42	-687.09	83.51	-12.83	10.92	-	
16.47														
	33	2	3.80	35.10	8.62e-04	-101.56	0.0	939.37	52.18	-173.07	47.76	35.10	-	
2.90														
			-2.90	3.35	-4.33e-05	0.0	25.0	939.37	1.40	-173.07	47.76	19.22	3.80	
							50.0	939.37	-49.39	-173.07	47.76	3.35	-	
2.19														
	33	7	0.97	25.30	7.79e-04	-101.56	0.0	1507.75	52.44	-120.22	33.66	25.30	-	
5.80														
			-5.80	3.60	-3.72e-05	0.0	25.0	1507.75	1.66	-120.22	33.66	14.45	0.97	
							50.0	1507.75	-49.13	-120.22	33.66	3.60	-	
4.96														
	33	9	2.61	21.39	5.43e-04	-78.12	0.0	767.17	40.14	-104.46	28.44	21.39	-	
2.54														
			-2.54	1.78	-2.89e-05	0.0	25.0	767.17	1.08	-104.46	28.44	11.59	2.61	
							50.0	767.17	-37.98	-104.46	28.44	1.78	-	
1.99														
	33	10	3.02	28.68	6.99e-04	-78.12	0.0	709.22	40.13	-141.73	39.22	28.68	-	
2.14														
			-2.14	2.82	-3.46e-05	0.0	25.0	709.22	1.07	-141.73	39.22	15.75	3.02	
							50.0	709.22	-37.99	-141.73	39.22	2.82	-	
1.59														
	33	31	-1.09	49.28	2.88e-04	-78.12	0.0	1267.18	40.04	-223.29	52.00	49.28	-	
6.54														
			-6.54	8.67	2.89e-04	0.0	25.0	1267.18	0.98	-223.29	52.00	28.98	-	
1.09														
							50.0	1267.18	-38.08	-223.29	52.00	8.67	-	
5.40														
	33	33	7.99	31.67	3.00e-04	-78.12	0.0	-236.00	40.35	-157.60	43.09	31.67	2.85	
			2.85	-5.31	-4.87e-06	0.0	25.0	-236.00	1.28	-157.60	43.09	13.18	7.99	
							50.0	-236.00	-37.78	-157.60	43.09	-5.31	3.37	
	33	36	-1.63	45.06	1.10e-03	-78.12	0.0	1507.34	40.16	-202.66	52.76	45.06	-	
6.87														
			-6.87	12.15	-8.06e-05	0.0	25.0	1507.34	1.10	-202.66	52.76	28.60	-	
1.63														
							50.0	1507.34	-37.96	-202.66	52.76	12.15	-	
6.17														
	33	37	7.84	32.18	2.87e-04	-78.12	0.0	-238.55	40.37	-158.85	43.12	32.18	2.52	
			2.52	-5.43	3.71e-05	0.0	25.0	-238.55	1.31	-158.85	43.12	13.37	7.84	
							50.0	-238.55	-37.75	-158.85	43.12	-5.43	3.39	
	33	40	-1.48	44.55	1.11e-03	-78.12	0.0	1509.90	40.14	-201.41	52.73	44.55	-	
6.54														
			-6.54	12.27	-1.23e-04	0.0	25.0	1509.90	1.07	-201.41	52.73	28.41	-	
1.48														
							50.0	1509.90	-37.99	-201.41	52.73	12.27	-	
6.19														
	33	65	5.00	28.82	4.23e-04	-78.12	0.0	305.20	40.28	-138.52	37.06	28.82	-	
0.17														
			-0.17	-1.22	-2.08e-05	0.0	25.0	305.20	1.22	-138.52	37.06	13.80	5.00	
							50.0	305.20	-37.84	-138.52	37.06	-1.22	0.39	
	33	68	0.66	21.74	8.30e-04	-78.12	0.0	1167.33	40.00	-110.15	31.33	21.74	-	
4.49														
			-4.49	5.89	-4.31e-05	0.0	25.0	1167.33	0.93	-110.15	31.33	13.81	0.66	
							50.0	1167.33	-38.13	-110.15	31.33	5.89	-	
3.95														
	33	69	4.93	29.04	4.17e-04	-78.12	0.0	304.08	40.29	-139.07	37.07	29.04	-	
0.32														
			-0.32	-1.28	-2.38e-06	0.0	25.0	304.08	1.23	-139.07	37.07	13.88	4.93	
							50.0	304.08	-37.83	-139.07	37.07	-1.28	0.40	
	33	72	0.73	21.52	8.36e-04	-78.12	0.0	1168.45	39.98	-109.60	31.31	21.52	-	
4.34														
			-4.34	5.94	-6.15e-05	0.0	25.0	1168.45	0.92	-109.60	31.31	13.73	0.73	
							50.0	1168.45	-38.14	-109.60	31.31	5.94	-	
3.96														
	33	85	3.48	30.15	-8.12e-05	-78.12	0.0	461.84	40.46	-141.23	33.43	30.15	-	
1.91														
			-1.91	-1.25	2.51e-05	0.0	25.0	461.84	1.40	-141.23	33.43	14.45	3.48	
							50.0	461.84	-37.66	-141.23	33.43	-1.25	-	
0.89														

Viale Duca Alessandro n. 11 – 43123 Parma
Cell. 335 1403156 – E mail ing.concari@gmail.com
Sito web: studioaire.it – P.IVA 02561480340

33	89	2.61	21.39	5.43e-04	-78.12	0.0	767.17	40.14	-104.46	28.44	21.39	-	2.54
		-2.54	1.78	-2.89e-05	0.0	25.0	767.17	1.08	-104.46	28.44	11.59	2.61	
						50.0	767.17	-37.98	-104.46	28.44	1.78	-	1.99
33	90	2.88	26.25	6.47e-04	-78.12	0.0	728.54	40.14	-129.31	35.63	26.25	-	2.27
		-2.27	2.47	-3.27e-05	0.0	25.0	728.54	1.07	-129.31	35.63	14.36	2.88	
						50.0	728.54	-37.99	-129.31	35.63	2.47	-	1.73
33	95	0.99	19.72	5.92e-04	-78.12	0.0	1107.45	40.31	-94.07	26.23	19.72	-	4.21
		-4.21	2.64	-2.87e-05	0.0	25.0	1107.45	1.25	-94.07	26.23	11.18	0.99	
						50.0	1107.45	-37.81	-94.07	26.23	2.64	-	3.57
33	101	2.61	21.39	5.43e-04	-78.12	0.0	767.17	40.14	-104.46	28.44	21.39	-	2.54
		-2.54	1.78	-2.89e-05	0.0	25.0	767.17	1.08	-104.46	28.44	11.59	2.61	
						50.0	767.17	-37.98	-104.46	28.44	1.78	-	1.99
33	107	2.29	21.06	5.53e-04	-78.12	0.0	835.23	40.18	-102.38	28.00	21.06	-	2.88
		-2.88	1.95	-2.88e-05	0.0	25.0	835.23	1.11	-102.38	28.00	11.50	2.29	
						50.0	835.23	-37.95	-102.38	28.00	1.95	-	2.31
33	111	2.86	25.77	6.37e-04	-78.12	0.0	732.40	40.14	-126.82	34.91	25.77	-	2.30
		-2.30	2.40	-3.23e-05	0.0	25.0	732.40	1.08	-126.82	34.91	14.08	2.86	
						50.0	732.40	-37.99	-126.82	34.91	2.40	-	1.75
33	113	2.61	21.39	5.43e-04	-78.12	0.0	767.17	40.14	-104.46	28.44	21.39	-	2.54
		-2.54	1.78	-2.89e-05	0.0	25.0	767.17	1.08	-104.46	28.44	11.59	2.61	
						50.0	767.17	-37.98	-104.46	28.44	1.78	-	1.99
33	114	2.83	25.28	6.26e-04	-78.12	0.0	736.26	40.14	-124.34	34.19	25.28	-	2.33
		-2.33	2.33	-3.19e-05	0.0	25.0	736.26	1.08	-124.34	34.19	13.81	2.83	
						50.0	736.26	-37.99	-124.34	34.19	2.33	-	1.78
33	115	2.61	21.39	5.43e-04	-78.12	0.0	767.17	40.14	-104.46	28.44	21.39	-	2.54
		-2.54	1.78	-2.89e-05	0.0	25.0	767.17	1.08	-104.46	28.44	11.59	2.61	
						50.0	767.17	-37.98	-104.46	28.44	1.78	-	1.99
34	2	91.81	38.65	-1.49e-04	-1786.71	0.0	-1752.80	895.09	-76.33	3.16	38.65	-	17.80
		-17.80	6.33	-3.79e-05	0.0	24.4	-1752.80	1.73	-76.33	3.16	22.49		91.81
						48.9	-1752.80	-891.62	-76.33	3.16	6.33	-	16.95
34	5	137.40	25.65	-1.03e-04	-2754.71	0.0	-1332.06	1378.02	-67.74	7.23	25.65	-	31.11
		-31.11	1.66	-3.37e-05	0.0	24.4	-1332.06	0.67	-67.74	7.23	13.65		137.40
						48.9	-1332.06	-1376.69	-67.74	7.23	1.66	-	30.78
34	8	138.61	38.22	-1.50e-04	-2754.71	0.0	-1835.48	1378.53	-86.02	6.28	38.22	-	30.02
		-30.02	4.68	-3.81e-05	0.0	24.4	-1835.48	1.17	-86.02	6.28	21.45		138.61
						48.9	-1835.48	-1376.18	-86.02	6.28	4.68	-	29.45
34	9	69.69	20.06	-7.82e-05	-1374.39	0.0	-961.07	688.14	-44.66	3.15	20.06	-	14.53
		-14.53	2.54	-2.58e-05	0.0	24.4	-961.07	0.94	-44.66	3.15	11.30		69.69
						48.9	-961.07	-686.25	-44.66	3.15	2.54	-	14.07
34	13	116.49	19.63	-7.94e-05	-2342.39	0.0	-1043.74	1171.58	-54.35	6.28	19.63	-	26.75
		-26.75	0.90	-2.60e-05	0.0	24.4	-1043.74	0.38	-54.35	6.28	10.26		116.49
						48.9	-1043.74	-1170.81	-54.35	6.28	0.90	-	26.56
34	46	79.37	79.83	-3.57e-04	-1374.39	0.0	-3781.82	689.04	-191.13	14.09	79.83	-	5.07
		-5.07	-9.66	8.41e-05	0.0	24.4	-3781.82	1.85	-191.13	14.09	35.09		79.37
						48.9	-3781.82	-685.34	-191.13	14.09	-9.66	-	4.18
34	50	79.58	101.48	-3.50e-04	-1374.39	0.0	-3858.47	688.95	-233.84	14.85	101.48	-	4.81
		-4.81	-9.06	-2.78e-04	0.0	24.4	-3858.47	1.75	-233.84	14.85	46.21		79.58
						48.9	-3858.47	-685.44	-233.84	14.85	-9.06	-	4.01
34	51	64.13	28.53	9.75e-05	-1374.39	0.0	390.58	687.94	74.00	-12.79	-9.55	-	20.06
		-20.06	-9.55	2.22e-04	0.0	24.4	390.58	0.75	74.00	-12.79	9.49		64.13
						48.9	390.58	-686.45	74.00	-12.79	28.53	-	19.65
34	53	64.48	27.58	-3.48e-04	-1374.39	0.0	478.91	687.99	61.90	-9.70	-4.23	-	19.72
		-19.72	-4.23	1.17e-04	0.0	24.4	478.91	0.80	61.90	-9.70	11.68		64.48
						48.9	478.91	-686.40	61.90	-9.70	27.58	-	

Viale Duca Alessandro n. 11 – 43123 Parma
Cell. 335 1403156 – E mail ing.concari@gmail.com
Sito web: studioaire.it – P.IVA 02561480340

19.30
34 56 79.23 96.15 9.48e-05 -1374.39 0.0 -3946.80 688.90 -221.74 11.75 96.15 -
5.15
-5.15 -8.11 -1.73e-04 0.0 24.4 -3946.80 1.70 -221.74 11.75 44.02
79.23
48.9 -3946.80 -685.49 -221.74 11.75 -8.11 -
4.36
34 82 74.42 59.65 -2.11e-04 -1374.39 0.0 -2389.32 688.65 -133.43 8.02 59.65 -
9.92
-9.92 -1.68 -1.37e-04 0.0 24.4 -2389.32 1.46 -133.43 8.02 28.99
74.42
48.9 -2389.32 -685.74 -133.43 8.02 -1.68 -
9.23
34 83 66.26 9.98 4.84e-06 -1374.39 0.0 -69.79 688.17 24.62 -2.72 -6.13 -
17.98
-17.98 -6.13 8.12e-05 0.0 24.4 -69.79 0.97 24.62 -2.72 1.93
66.26
48.9 -69.79 -686.22 24.62 -2.72 9.98 -
17.48
34 89 69.69 20.06 -7.82e-05 -1374.39 0.0 -961.07 688.14 -44.66 3.15 20.06 -
14.53
-14.53 2.54 -2.58e-05 0.0 24.4 -961.07 0.94 -44.66 3.15 11.30
69.69
48.9 -961.07 -686.25 -44.66 3.15 2.54 -
14.07
34 90 70.50 28.44 -1.10e-04 -1374.39 0.0 -1296.68 688.48 -56.84 2.52 28.44 -
13.80
-13.80 4.56 -2.87e-05 0.0 24.4 -1296.68 1.28 -56.84 2.52 16.50
70.50
48.9 -1296.68 -685.91 -56.84 2.52 4.56 -
13.18
34 93 100.89 19.77 -7.90e-05 -2019.72 0.0 -1016.18 1010.43 -51.12 5.24 19.77 -
22.67
-22.67 1.44 -2.59e-05 0.0 24.4 -1016.18 0.57 -51.12 5.24 10.61
100.89
48.9 -1016.18 -1009.29 -51.12 5.24 1.44 -
22.40
34 96 101.70 28.15 -1.10e-04 -2019.72 0.0 -1351.79 1010.77 -63.30 4.61 28.15 -
21.95
-21.95 3.46 -2.89e-05 0.0 24.4 -1351.79 0.91 -63.30 4.61 15.81
101.70
48.9 -1351.79 -1008.95 -63.30 4.61 3.46 -
21.51
34 101 69.69 20.06 -7.82e-05 -1374.39 0.0 -961.07 688.14 -44.66 3.15 20.06 -
14.53
-14.53 2.54 -2.58e-05 0.0 24.4 -961.07 0.94 -44.66 3.15 11.30
69.69
48.9 -961.07 -686.25 -44.66 3.15 2.54 -
14.07
34 105 75.93 20.00 -7.84e-05 -1503.46 0.0 -972.09 752.60 -45.95 3.57 20.00 -
16.16
-16.16 2.32 -2.58e-05 0.0 24.4 -972.09 0.87 -45.95 3.57 11.16
75.93
48.9 -972.09 -750.86 -45.95 3.57 2.32 -
15.74
34 108 76.58 26.71 -1.03e-04 -1503.46 0.0 -1240.58 752.87 -55.69 3.07 26.71 -
15.58
-15.58 3.93 -2.82e-05 0.0 24.4 -1240.58 1.14 -55.69 3.07 15.32
76.58
48.9 -1240.58 -750.59 -55.69 3.07 3.93 -
15.02
34 111 70.42 27.60 -1.06e-04 -1374.39 0.0 -1263.12 688.44 -55.62 2.59 27.60 -
13.88
-13.88 4.35 -2.84e-05 0.0 24.4 -1263.12 1.25 -55.62 2.59 15.98
70.42
48.9 -1263.12 -685.95 -55.62 2.59 4.35 -
13.27
34 112 70.42 27.60 -1.06e-04 -1374.39 0.0 -1263.12 688.44 -55.62 2.59 27.60 -
13.88
-13.88 4.35 -2.84e-05 0.0 24.4 -1263.12 1.25 -55.62 2.59 15.98
70.42
48.9 -1263.12 -685.95 -55.62 2.59 4.35 -
13.27
34 113 69.69 20.06 -7.82e-05 -1374.39 0.0 -961.07 688.14 -44.66 3.15 20.06 -
14.53
-14.53 2.54 -2.58e-05 0.0 24.4 -961.07 0.94 -44.66 3.15 11.30
69.69
48.9 -961.07 -686.25 -44.66 3.15 2.54 -
14.07
34 114 70.34 26.76 -1.03e-04 -1374.39 0.0 -1229.55 688.41 -54.40 2.65 26.76 -
13.95
-13.95 4.15 -2.81e-05 0.0 24.4 -1229.55 1.21 -54.40 2.65 15.46
70.34
48.9 -1229.55 -685.98 -54.40 2.65 4.15 -
13.36
34 116 70.34 26.76 -1.03e-04 -1374.39 0.0 -1229.55 688.41 -54.40 2.65 26.76 -
13.95
-13.95 4.15 -2.81e-05 0.0 24.4 -1229.55 1.21 -54.40 2.65 15.46
70.34
48.9 -1229.55 -685.98 -54.40 2.65 4.15 -
13.36
35 2 -19.05 1.57 8.25e-04 -101.56 0.0 3311.33 137.48 3.93 1.18 -1.94 -
62.42
-62.42 -1.94 -4.65e-05 0.0 25.0 3311.33 86.70 3.93 1.18 -0.19 -
34.39
50.0 3311.33 35.92 3.93 1.18 1.57 -
19.05
35 4 -19.05 1.57 8.25e-04 -101.56 0.0 3311.33 137.48 3.93 1.18 -1.94 -

Viale Duca Alessandro n. 11 – 43123 Parma
Cell. 335 1403156 – E mail ing.concari@gmail.com
Sito web: studioaire.it – P.IVA 02561480340

62.42														
			-62.42	-1.94	-4.65e-05	0.0	25.0	3311.33	86.70	3.93	1.18	-0.19	-	
34.39														
							50.0	3311.33	35.92	3.93	1.18	1.57	-	
19.05														
	35	8	-27.26	1.14	8.94e-04	-101.56	0.0	4403.14	157.15	-2.88	3.27	-1.54	-	
80.46														
			-80.46	-1.54	-4.70e-05	0.0	25.0	4403.14	106.37	-2.88	3.27	-0.20	-	
47.51														
							50.0	4403.14	55.59	-2.88	3.27	1.14	-	
27.26														
	35	9	-14.89	1.14	5.20e-04	-78.12	0.0	2507.77	101.72	-1.60	1.83	-0.39	-	
46.22														
			-46.22	-0.39	-3.09e-05	0.0	25.0	2507.77	62.65	-1.60	1.83	0.37	-	
25.67														
							50.0	2507.77	23.59	-1.60	1.83	1.14	-	
14.89														
	35	10	-14.59	1.22	6.69e-04	-78.12	0.0	2558.99	106.97	4.41	0.64	-1.82	-	
48.55														
			-48.55	-1.82	-3.72e-05	0.0	25.0	2558.99	67.90	4.41	0.64	-0.30	-	
26.69														
							50.0	2558.99	28.84	4.41	0.64	1.22	-	
14.59														
	35	25	-31.51	3.78	2.45e-04	-78.12	0.0	4307.68	124.82	-15.51	7.65	3.78	-	
73.79														
			-73.79	-3.70	-3.43e-04	0.0	25.0	4307.68	85.76	-15.51	7.65	0.04	-	
47.77														
							50.0	4307.68	46.70	-15.51	7.65	-3.70	-	
31.51														
	35	28	0.02	5.91	1.09e-03	-78.12	0.0	1105.10	93.92	25.26	-6.49	-8.00	-	
28.03														
			-28.03	-8.00	2.53e-04	0.0	25.0	1105.10	54.86	25.26	-6.49	-1.05	-	
9.13														
							50.0	1105.10	15.79	25.26	-6.49	5.91	0.02	
	35	31	-1.40	9.27	2.61e-04	-78.12	0.0	1235.59	78.41	27.36	-12.00	-4.56	-	
20.62														
			-20.62	-4.56	2.88e-04	0.0	25.0	1235.59	39.35	27.36	-12.00	2.36	-	
6.12														
							50.0	1235.59	0.28	27.36	-12.00	9.27	-	
1.40														
	35	34	-28.86	0.16	1.08e-03	-78.12	0.0	4090.85	147.27	-16.91	13.14	0.16	-	
83.39														
			-83.39	-6.86	0.0	0.0	25.0	4090.85	108.20	-16.91	13.14	-3.35	-	
51.25														
							50.0	4090.85	69.14	-16.91	13.14	-6.86	-	
28.86														
	35	44	-5.93	-2.18	2.22e-03	-78.12	0.0	1762.78	130.40	13.28	5.83	-10.04	-	
53.16														
			-53.16	-10.04	6.35e-05	0.0	25.0	1762.78	91.33	13.28	5.83	-6.11	-	
24.66														
							50.0	1762.78	52.27	13.28	5.83	-2.18	-	
5.93														
	35	57	-22.66	1.48	3.86e-04	-78.12	0.0	3349.72	112.23	-8.19	4.50	1.48	-	
58.97														
			-58.97	-1.05	-1.70e-04	0.0	25.0	3349.72	73.17	-8.19	4.50	0.21	-	
35.93														
							50.0	3349.72	34.11	-8.19	4.50	-1.05	-	
22.66														
	35	60	-6.79	3.42	8.13e-04	-78.12	0.0	1720.46	96.80	11.41	-2.12	-3.79	-	
35.96														
			-35.96	-3.79	1.02e-04	0.0	25.0	1720.46	57.74	11.41	-2.12	-0.18	-	
16.49														
							50.0	1720.46	18.67	11.41	-2.12	3.42	-	
6.79														
	35	63	-8.01	4.82	3.93e-04	-78.12	0.0	1816.67	88.76	10.06	-4.08	-1.80	-	
32.65														
			-32.65	-1.80	1.17e-04	0.0	25.0	1816.67	49.70	10.06	-4.08	1.51	-	
15.45														
							50.0	1816.67	10.64	10.06	-4.08	4.82	-	
8.01														
	35	66	-20.91	-0.58	8.09e-04	-78.12	0.0	3216.03	123.31	-6.54	6.46	-0.58	-	
63.24														
			-63.24	-2.36	-1.91e-05	0.0	25.0	3216.03	84.24	-6.54	6.46	-1.47	-	
37.19														
							50.0	3216.03	45.18	-6.54	6.46	-2.36	-	
20.91														
	35	76	-10.36	-0.25	1.30e-03	-78.12	0.0	2134.61	115.00	6.61	3.25	-4.97	-	
49.09														
			-49.09	-4.97	1.15e-05	0.0	25.0	2134.61	75.94	6.61	3.25	-2.61	-	
24.84														
							50.0	2134.61	36.88	6.61	3.25	-0.25	-	
10.36														
	35	89	-14.89	1.14	5.20e-04	-78.12	0.0	2507.77	101.72	-1.60	1.83	-0.39	-	
46.22														
			-46.22	-0.39	-3.09e-05	0.0	25.0	2507.77	62.65	-1.60	1.83	0.37	-	
25.67														
							50.0	2507.77	23.59	-1.60	1.83	1.14	-	
14.89														
	35	90	-14.69	1.20	6.19e-04	-78.12	0.0	2541.92	105.22	2.41	1.03	-1.34	-	
47.78														
			-47.78	-1.34	-3.51e-05	0.0	25.0	2541.92	66.15	2.41	1.03	-0.07	-	
26.35														
							50.0	2541.92	27.09	2.41	1.03	1.20	-	
14.69														
	35	92	-14.69	1.20	6.19e-04	-78.12	0.0	2541.92	105.22	2.41	1.03	-1.34	-	
47.78														
			-47.78	-1.34	-3.51e-05	0.0	25.0	2541.92	66.15	2.41	1.03	-0.07	-	
26.35														

Viale Duca Alessandro n. 11 – 43123 Parma
Cell. 335 1403156 – E mail ing.concari@gmail.com
Sito web: studioaire.it – P.IVA 02561480340

							50.0	2541.92	27.09	2.41	1.03	1.20	-
14.69													
	35	96	-20.16	0.91	6.65e-04	-78.12	0.0	3269.80	118.33	-2.14	2.43	-1.08	-
59.80													
			-59.80	-1.08	-3.55e-05	0.0	25.0	3269.80	79.27	-2.14	2.43	-0.09	-
35.10													
							50.0	3269.80	40.20	-2.14	2.43	0.91	-
20.16													
	35	101	-14.89	1.14	5.20e-04	-78.12	0.0	2507.77	101.72	-1.60	1.83	-0.39	-
46.22													
			-46.22	-0.39	-3.09e-05	0.0	25.0	2507.77	62.65	-1.60	1.83	0.37	-
25.67													
							50.0	2507.77	23.59	-1.60	1.83	1.14	-
14.89													
	35	108	-15.82	1.13	6.09e-04	-78.12	0.0	2680.67	107.14	0.70	1.47	-1.10	-
49.87													
			-49.87	-1.10	-3.43e-05	0.0	25.0	2680.67	68.08	0.70	1.47	0.01	-
27.96													
							50.0	2680.67	29.01	0.70	1.47	1.13	-
15.82													
	35	111	-14.71	1.19	6.10e-04	-78.12	0.0	2538.50	104.87	2.01	1.11	-1.25	-
47.62													
			-47.62	-1.25	-3.47e-05	0.0	25.0	2538.50	65.80	2.01	1.11	-0.03	-
26.28													
							50.0	2538.50	26.74	2.01	1.11	1.19	-
14.71													
	35	112	-14.71	1.19	6.10e-04	-78.12	0.0	2538.50	104.87	2.01	1.11	-1.25	-
47.62													
			-47.62	-1.25	-3.47e-05	0.0	25.0	2538.50	65.80	2.01	1.11	-0.03	-
26.28													
							50.0	2538.50	26.74	2.01	1.11	1.19	-
14.71													
	35	113	-14.89	1.14	5.20e-04	-78.12	0.0	2507.77	101.72	-1.60	1.83	-0.39	-
46.22													
			-46.22	-0.39	-3.09e-05	0.0	25.0	2507.77	62.65	-1.60	1.83	0.37	-
25.67													
							50.0	2507.77	23.59	-1.60	1.83	1.14	-
14.89													
	35	114	-14.73	1.18	6.00e-04	-78.12	0.0	2535.09	104.52	1.61	1.19	-1.15	-
47.46													
			-47.46	-1.15	-3.42e-05	0.0	25.0	2535.09	65.45	1.61	1.19	0.01	-
26.21													
							50.0	2535.09	26.39	1.61	1.19	1.18	-
14.73													
	35	116	-14.73	1.18	6.00e-04	-78.12	0.0	2535.09	104.52	1.61	1.19	-1.15	-
47.46													
			-47.46	-1.15	-3.42e-05	0.0	25.0	2535.09	65.45	1.61	1.19	0.01	-
26.21													
							50.0	2535.09	26.39	1.61	1.19	1.18	-
14.73													
	36	2	86.81	7.53	-1.38e-04	-1786.71	0.0	-90.91	891.43	-3.47	-8.21	7.53	-
21.90													
			-22.85	-2.77	-4.17e-05	0.0	24.4	-90.91	-1.92	-3.47	-8.21	2.38	
86.81													
							48.9	-90.91	-895.28	-3.47	-8.21	-2.77	-
22.85													
	36	6	133.74	6.94	-1.39e-04	-2754.71	0.0	-221.17	1375.39	12.81	-12.12	6.94	-
34.12													
			-35.09	0.14	-4.16e-05	0.0	24.4	-221.17	-1.96	12.81	-12.12	3.54	
133.74													
							48.9	-221.17	-1379.31	12.81	-12.12	0.14	-
35.09													
	36	7	134.30	5.78	-9.52e-05	-2754.71	0.0	-265.81	1375.68	26.18	-13.55	5.78	-
33.64													
			-34.46	3.71	-3.61e-05	0.0	24.4	-265.81	-1.67	26.18	-13.55	4.75	
134.30													
							48.9	-265.81	-1379.02	26.18	-13.55	3.71	-
34.46													
	36	10	66.65	6.06	-1.16e-04	-1374.39	0.0	-59.63	685.65	-5.75	-5.99	6.06	-
16.96													
			-17.72	-2.96	-3.33e-05	0.0	24.4	-59.63	-1.55	-5.75	-5.99	1.55	
66.65													
							48.9	-59.63	-688.74	-5.75	-5.99	-2.96	-
17.72													
	36	12	66.65	6.06	-1.16e-04	-1374.39	0.0	-59.63	685.65	-5.75	-5.99	6.06	-
16.96													
			-17.72	-2.96	-3.33e-05	0.0	24.4	-59.63	-1.55	-5.75	-5.99	1.55	
66.65													
							48.9	-59.63	-688.74	-5.75	-5.99	-2.96	-
17.72													
	36	31	68.32	19.65	5.51e-04	-1374.39	0.0	-792.48	685.95	-41.73	0.75	19.65	-
15.36													
			-15.98	-5.60	3.62e-04	0.0	24.4	-792.48	-1.24	-41.73	0.75	7.02	
68.32													
							48.9	-792.48	-688.43	-41.73	0.75	-5.60	-
15.98													
	36	50	60.92	-9.92	-3.23e-04	-1374.39	0.0	1467.92	685.66	0.08	-5.75	-9.92	-
22.69													
			-23.45	-15.85	-2.80e-04	0.0	24.4	1467.92	-1.54	0.08	-5.75	-12.88	
60.92													
							48.9	1467.92	-688.73	0.08	-5.75	-15.85	-
23.45													
	36	51	70.46	19.13	9.50e-05	-1374.39	0.0	-1091.88	685.73	-21.35	-3.82	19.13	-
13.17													
			-13.88	5.05	2.18e-04	0.0	24.4	-1091.88	-1.47	-21.35	-3.82	12.09	
70.46													
							48.9	-1091.88	-688.66	-21.35	-3.82	5.05	-
13.88													

Viale Duca Alessandro n. 11 – 43123 Parma
Cell. 335 1403156 – E mail ing.concari@gmail.com
Sito web: studioaire.it – P.IVA 02561480340

36 53 70.58 14.95 -3.49e-04 -1374.39 0.0 -998.73 685.26 -5.60 -8.03 14.95 -
12.94
-13.87 8.20 1.14e-04 0.0 24.4 -998.73 -1.94 -5.60 -8.03 11.57
70.58
48.9 -998.73 -689.13 -5.60 -8.03 8.20 -
13.87
36 56 60.80 -5.74 1.21e-04 -1374.39 0.0 1374.77 686.13 -15.66 -1.53 -5.74 -
22.92
-23.47 -18.99 -1.76e-04 0.0 24.4 1374.77 -1.07 -15.66 -1.53 -12.37
60.80
48.9 1374.77 -688.26 -15.66 -1.53 -18.99 -
23.47
36 83 69.56 12.32 3.84e-06 -1374.39 0.0 -764.38 685.84 0.75 -7.09 12.32 -
14.10
-14.76 5.14 7.86e-05 0.0 24.4 -764.38 -1.36 0.75 -7.09 8.73
69.56
48.9 -764.38 -688.55 0.75 -7.09 5.14 -
14.76
36 85 69.75 11.48 -2.09e-04 -1374.39 0.0 -798.91 685.50 4.19 -8.83 11.48 -
13.82
-14.65 6.02 3.00e-05 0.0 24.4 -798.91 -1.70 4.19 -8.83 8.75
69.75
48.9 -798.91 -688.89 4.19 -8.83 6.02 -
14.65
36 88 64.07 -0.45 1.75e-05 -1374.39 0.0 638.00 686.07 -3.22 -4.48 -0.45 -
19.64
-20.20 -8.59 -9.15e-05 0.0 24.4 638.00 -1.13 -3.22 -4.48 -4.52
64.07
48.9 638.00 -688.32 -3.22 -4.48 -8.59 -
20.20
36 90 66.84 5.67 -1.02e-04 -1374.39 0.0 -74.51 685.74 -1.29 -6.46 5.67 -
16.80
-17.51 -1.77 -3.15e-05 0.0 24.4 -74.51 -1.45 -1.29 -6.46 1.95
66.84
48.9 -74.51 -688.64 -1.29 -6.46 -1.77 -
17.51
36 92 66.84 5.67 -1.02e-04 -1374.39 0.0 -74.51 685.74 -1.29 -6.46 5.67 -
16.80
-17.51 -1.77 -3.15e-05 0.0 24.4 -74.51 -1.45 -1.29 -6.46 1.95
66.84
48.9 -74.51 -688.64 -1.29 -6.46 -1.77 -
17.51
36 94 98.12 5.28 -1.02e-04 -2019.72 0.0 -161.35 1008.39 9.56 -9.07 5.28 -
24.95
-25.67 0.17 -3.14e-05 0.0 24.4 -161.35 -1.47 9.56 -9.07 2.73
98.12
48.9 -161.35 -1011.34 9.56 -9.07 0.17 -
25.67
36 95 98.49 4.50 -7.31e-05 -2019.72 0.0 -191.11 1008.58 18.47 -10.02 4.50 -
24.62
-25.25 2.56 -2.78e-05 0.0 24.4 -191.11 -1.28 18.47 -10.02 3.53
98.49
48.9 -191.11 -1011.14 18.47 -10.02 2.56 -
25.25
36 106 73.17 5.44 -9.59e-05 -1503.46 0.0 -97.83 750.31 2.66 -7.18 5.44 -
18.36
-19.06 -0.90 -3.08e-05 0.0 24.4 -97.83 -1.42 2.66 -7.18 2.27
73.17
48.9 -97.83 -753.14 2.66 -7.18 -0.90 -
19.06
36 107 73.47 4.82 -7.24e-05 -1503.46 0.0 -121.63 750.47 9.79 -7.94 4.82 -
18.10
-18.72 1.01 -2.79e-05 0.0 24.4 -121.63 -1.26 9.79 -7.94 2.91
73.47
48.9 -121.63 -752.99 9.79 -7.94 1.01 -
18.72
36 111 66.87 5.60 -9.86e-05 -1374.39 0.0 -77.48 685.76 -0.40 -6.56 5.60 -
16.77
-17.47 -1.53 -3.11e-05 0.0 24.4 -77.48 -1.43 -0.40 -6.56 2.03
66.87
48.9 -77.48 -688.63 -0.40 -6.56 -1.53 -
17.47
36 112 66.87 5.60 -9.86e-05 -1374.39 0.0 -77.48 685.76 -0.40 -6.56 5.60 -
16.77
-17.47 -1.53 -3.11e-05 0.0 24.4 -77.48 -1.43 -0.40 -6.56 2.03
66.87
48.9 -77.48 -688.63 -0.40 -6.56 -1.53 -
17.47
36 114 66.91 5.52 -9.57e-05 -1374.39 0.0 -80.46 685.78 0.49 -6.65 5.52 -
16.73
-17.42 -1.29 -3.08e-05 0.0 24.4 -80.46 -1.41 0.49 -6.65 2.11
66.91
48.9 -80.46 -688.61 0.49 -6.65 -1.29 -
17.42
36 115 67.21 4.90 -7.22e-05 -1374.39 0.0 -104.26 685.94 7.62 -7.42 4.90 -
16.47
-17.09 0.62 -2.79e-05 0.0 24.4 -104.26 -1.26 7.62 -7.42 2.76
67.21
48.9 -104.26 -688.45 7.62 -7.42 0.62 -
17.09
36 116 66.91 5.52 -9.57e-05 -1374.39 0.0 -80.46 685.78 0.49 -6.65 5.52 -
16.73
-17.42 -1.29 -3.08e-05 0.0 24.4 -80.46 -1.41 0.49 -6.65 2.11
66.91
48.9 -80.46 -688.61 0.49 -6.65 -1.29 -
17.42
37 2 4.67 38.43 8.61e-04 -101.56 0.0 651.03 52.65 -273.69 74.94 38.43 -
2.16

Viale Duca Alessandro n. 11 – 43123 Parma
Cell. 335 1403156 – E mail ing.concari@gmail.com
Sito web: studioaire.it – P.IVA 02561480340

			-2.16	-11.78	-4.47e-05	0.0	25.0	651.03	1.87	-273.69	74.94	13.32	4.67
							50.0	651.03	-48.91	-273.69	74.94	-11.78	-
1.21													
	37	4	4.67	38.43	8.61e-04	-101.56	0.0	651.03	52.65	-273.69	74.94	38.43	-
2.16													
			-2.16	-11.78	-4.47e-05	0.0	25.0	651.03	1.87	-273.69	74.94	13.32	4.67
							50.0	651.03	-48.91	-273.69	74.94	-11.78	-
1.21													
	37	7	2.10	28.20	7.78e-04	-101.56	0.0	1234.13	53.47	-193.95	53.42	28.20	-
4.93													
			-4.93	-7.19	-3.82e-05	0.0	25.0	1234.13	2.68	-193.95	53.42	10.50	2.10
							50.0	1234.13	-48.10	-193.95	53.42	-7.19	-
3.57													
	37	10	3.68	31.63	6.98e-04	-78.12	0.0	476.08	40.49	-224.78	61.49	31.63	-
1.57													
			-1.57	-9.65	-3.58e-05	0.0	25.0	476.08	1.43	-224.78	61.49	10.99	3.68
							50.0	476.08	-37.64	-224.78	61.49	-9.65	-
0.84													
	37	33	7.92	28.26	2.47e-04	-78.12	0.0	-337.67	37.74	-225.40	68.37	28.26	3.39
			2.69	-19.08	-2.40e-05	0.0	25.0	-337.67	-1.33	-225.40	68.37	4.59	7.92
							50.0	-337.67	-40.39	-225.40	68.37	-19.08	2.69
	37	34	7.99	34.20	1.16e-03	-78.12	0.0	-235.69	39.75	-225.73	69.34	34.20	2.89
			2.89	-16.50	2.17e-05	0.0	25.0	-235.69	0.69	-225.73	69.34	8.85	7.99
							50.0	-235.69	-38.37	-225.73	69.34	-16.50	3.31
	37	36	-0.20	49.55	1.15e-03	-78.12	0.0	1109.01	42.94	-328.69	83.41	49.55	-
6.14													
			-6.14	-4.78	-6.47e-05	0.0	25.0	1109.01	3.87	-328.69	83.41	22.39	-
0.25													
							50.0	1109.01	-35.19	-328.69	83.41	-4.78	-
4.13													
	37	37	7.92	27.98	2.44e-04	-78.12	0.0	-331.12	37.63	-225.22	68.36	27.98	3.41
			2.67	-19.27	4.28e-05	0.0	25.0	-331.12	-1.44	-225.22	68.36	4.35	7.92
							50.0	-331.12	-40.50	-225.22	68.36	-19.27	2.67
	37	40	-0.20	49.83	1.15e-03	-78.12	0.0	1102.46	43.05	-328.86	83.43	49.83	-
6.16													
			-6.16	-4.58	-1.32e-04	0.0	25.0	1102.46	3.98	-328.86	83.43	22.62	-
0.25													
							50.0	1102.46	-35.08	-328.86	83.43	-4.58	-
4.11													
	37	65	5.34	26.95	3.97e-04	-78.12	0.0	155.79	39.26	-203.88	58.90	26.95	0.41
			0.41	-12.98	-2.99e-05	0.0	25.0	155.79	0.20	-203.88	58.90	6.99	5.34
							50.0	155.79	-38.86	-203.88	58.90	-12.98	0.50
	37	66	5.46	30.43	8.61e-04	-78.12	0.0	192.31	40.18	-209.10	60.61	30.43	0.28
			0.28	-12.00	-9.03e-06	0.0	25.0	192.31	1.12	-209.10	60.61	9.21	5.46
							50.0	192.31	-37.94	-209.10	60.61	-12.00	0.88
	37	68	1.66	27.94	8.54e-04	-78.12	0.0	896.32	41.77	-188.06	48.52	27.94	-
3.93													
			-3.93	-3.94	-3.60e-05	0.0	25.0	896.32	2.71	-188.06	48.52	12.00	1.65
							50.0	896.32	-36.35	-188.06	48.52	-3.94	-
2.53													
	37	69	5.34	26.83	3.96e-04	-78.12	0.0	158.63	39.22	-203.81	58.89	26.83	0.42
			0.42	-13.06	0.0	0.0	25.0	158.63	0.15	-203.81	58.89	6.88	5.34
							50.0	158.63	-38.91	-203.81	58.89	-13.06	0.49
	37	72	1.67	28.06	8.55e-04	-78.12	0.0	893.49	41.82	-188.14	48.53	28.06	-
3.93													
			-3.93	-3.86	-6.54e-05	0.0	25.0	893.49	2.76	-188.14	48.53	12.10	1.65
							50.0	893.49	-36.30	-188.14	48.53	-3.86	-
2.52													
	37	82	4.27	34.12	1.40e-03	-78.12	0.0	474.85	42.00	-207.93	58.31	34.12	-
1.41													
			-1.41	-7.59	-1.35e-04	0.0	25.0	474.85	2.94	-207.93	58.31	13.26	4.25
							50.0	474.85	-36.12	-207.93	58.31	-7.59	0.15
	37	90	3.55	28.64	6.46e-04	-78.12	0.0	511.78	40.51	-204.20	55.93	28.64	-
1.70													
			-1.70	-8.80	-3.38e-05	0.0	25.0	511.78	1.45	-204.20	55.93	9.92	3.55
							50.0	511.78	-37.61	-204.20	55.93	-8.80	-
0.97													
	37	92	3.55	28.64	6.46e-04	-78.12	0.0	511.78	40.51	-204.20	55.93	28.64	-
1.70													
			-1.70	-8.80	-3.38e-05	0.0	25.0	511.78	1.45	-204.20	55.93	9.92	3.55
							50.0	511.78	-37.61	-204.20	55.93	-8.80	-
0.97													
	37	95	1.84	21.82	5.91e-04	-78.12	0.0	900.51	41.05	-151.04	41.59	21.82	-
3.55													
			-3.55	-5.74	-2.95e-05	0.0	25.0	900.51	1.99	-151.04	41.59	8.04	1.84
							50.0	900.51	-37.07	-151.04	41.59	-5.74	-
2.54													
	37	107	3.00	22.50	5.52e-04	-78.12	0.0	646.65	40.65	-160.65	44.17	22.50	-
2.29													
			-2.29	-6.83	-2.97e-05	0.0	25.0	646.65	1.59	-160.65	44.17	7.83	3.00
							50.0	646.65	-37.47	-160.65	44.17	-6.83	-
1.49													
	37	111	3.52	28.04	6.36e-04	-78.12	0.0	518.92	40.51	-200.09	54.82	28.04	-
1.73													
			-1.73	-8.63	-3.34e-05	0.0	25.0	518.92	1.45	-200.09	54.82	9.71	3.52
							50.0	518.92	-37.61	-200.09	54.82	-8.63	-
0.99													
	37	112	3.52	28.04	6.36e-04	-78.12	0.0	518.92	40.51	-200.09	54.82	28.04	-
1.73													
			-1.73	-8.63	-3.34e-05	0.0	25.0	518.92	1.45	-200.09	54.82	9.71	3.52
							50.0	518.92	-37.61	-200.09	54.82	-8.63	-
0.99													
	37	114	3.50	27.44	6.26e-04	-78.12	0.0	526.06	40.52	-195.97	53.71	27.44	-
1.76													
			-1.76	-8.46	-3.30e-05	0.0	25.0	526.06	1.46	-195.97	53.71	9.49	3.50
							50.0	526.06	-37.61	-195.97	53.71	-8.46	-
1.02													
	37	115	3.29	22.67	5.42e-04	-78.12	0.0	583.18	40.55	-163.06	44.82	22.67	-

Viale Duca Alessandro n. 11 – 43123 Parma
Cell. 335 1403156 – E mail ing.concari@gmail.com
Sito web: studioaire.it – P.IVA 02561480340

1.98														
			-1.98	-7.10	-2.98e-05	0.0	25.0	583.18	1.49	-163.06	44.82	7.78	3.29	
							50.0	583.18	-37.57	-163.06	44.82	-7.10	-	
1.22														
	37	116	3.50	27.44	6.26e-04	-78.12	0.0	526.06	40.52	-195.97	53.71	27.44	-	
1.76														
			-1.76	-8.46	-3.30e-05	0.0	25.0	526.06	1.46	-195.97	53.71	9.49	3.50	
							50.0	526.06	-37.61	-195.97	53.71	-8.46	-	
1.02														
	38	4	91.43	9.90	-1.48e-04	-1786.71	0.0	-1553.76	890.10	-24.41	4.74	9.90	-	
16.96														
			-18.55	3.42	-3.95e-05	0.0	24.4	-1553.76	-3.25	-24.41	4.74	6.66		
91.43														
							48.9	-1553.76	-896.60	-24.41	4.74	3.42	-	
18.55														
	38	5	137.01	6.24	-1.02e-04	-2754.71	0.0	-1192.45	1375.10	-26.65	5.60	6.24	-	
30.79														
			-31.89	-0.34	-3.47e-05	0.0	24.4	-1192.45	-2.25	-26.65	5.60	2.95		
137.01														
							48.9	-1192.45	-1379.60	-26.65	5.60	-0.34	-	
31.89														
	38	8	138.13	9.53	-1.49e-04	-2754.71	0.0	-1656.63	1374.25	-29.86	6.12	9.53	-	
29.45														
			-30.97	1.95	-3.96e-05	0.0	24.4	-1656.63	-3.10	-29.86	6.12	5.74		
138.13														
							48.9	-1656.63	-1380.45	-29.86	6.12	1.95	-	
30.97														
	38	9	69.47	5.09	-7.76e-05	-1374.39	0.0	-838.13	685.35	-16.30	3.25	5.09	-	
14.07														
			-14.98	0.87	-2.66e-05	0.0	24.4	-838.13	-1.85	-16.30	3.25	2.98		
69.47														
							48.9	-838.13	-689.04	-16.30	3.25	0.87	-	
14.98														
	38	13	116.17	4.72	-7.88e-05	-2342.39	0.0	-941.01	1169.50	-21.76	4.62	4.72	-	
26.56														
			-27.40	-0.60	-2.67e-05	0.0	24.4	-941.01	-1.70	-21.76	4.62	2.06		
116.17														
							48.9	-941.01	-1172.89	-21.76	4.62	-0.60	-	
27.40														
	38	49	65.27	36.15	-4.59e-04	-1374.39	0.0	699.16	689.56	-22.67	-3.40	36.15	-	
19.31														
			-19.31	29.75	-2.38e-06	0.0	24.4	699.16	2.37	-22.67	-3.40	32.95		
65.27														
							48.9	699.16	-684.83	-22.67	-3.40	29.75	-	
18.14														
	38	50	77.71	-9.14	-4.73e-04	-1374.39	0.0	-3793.88	677.93	-23.02	15.50	-9.14	-	
4.01														
			-8.54	-16.35	-2.86e-04	0.0	24.4	-3793.88	-9.27	-23.02	15.50	-12.74		
77.71														
							48.9	-3793.88	-696.46	-23.02	15.50	-16.35	-	
8.54														
	38	52	77.55	-10.82	2.08e-04	-1374.39	0.0	-3884.88	678.70	-18.58	11.55	-10.82	-	
4.36														
			-8.53	-15.37	-5.70e-05	0.0	24.4	-3884.88	-8.50	-18.58	11.55	-13.09		
77.55														
							48.9	-3884.88	-695.69	-18.58	11.55	-15.37	-	
8.53														
	38	53	65.27	36.34	-5.09e-04	-1374.39	0.0	697.97	689.57	-22.77	-3.64	36.34	-	
19.30														
			-19.30	29.97	1.62e-04	0.0	24.4	697.97	2.37	-22.77	-3.64	33.16		
65.27														
							48.9	697.97	-684.82	-22.77	-3.64	29.97	-	
18.14														
	38	54	77.72	-8.95	-5.23e-04	-1374.39	0.0	-3795.06	677.93	-23.11	15.26	-8.95	-	
4.01														
			-8.53	-16.12	-1.22e-04	0.0	24.4	-3795.06	-9.26	-23.11	15.26	-12.54		
77.72														
							48.9	-3795.06	-696.46	-23.11	15.26	-16.12	-	
8.53														
	38	55	65.09	34.28	2.73e-04	-1374.39	0.0	609.34	690.33	-18.14	-7.12	34.28	-	
19.66														
			-19.66	30.51	6.29e-05	0.0	24.4	609.34	3.13	-18.14	-7.12	32.39		
65.09														
							48.9	609.34	-684.06	-18.14	-7.12	30.51	-	
18.14														
	38	82	73.44	-0.21	-2.68e-04	-1374.39	0.0	-2280.67	681.82	-20.22	8.80	-0.21	-	
9.24														
			-11.86	-6.04	-1.42e-04	0.0	24.4	-2280.67	-5.37	-20.22	8.80	-3.12		
73.44														
							48.9	-2280.67	-692.57	-20.22	8.80	-6.04	-	
11.86														
	38	85	66.91	14.42	-2.82e-04	-1374.39	0.0	72.41	687.43	-18.66	-0.03	14.42	-	
17.14														
			-17.14	9.28	5.24e-05	0.0	24.4	72.41	0.24	-18.66	-0.03	11.85		
66.91														
							48.9	72.41	-686.95	-18.66	-0.03	9.28	-	
17.02														
	38	86	73.44	-0.12	-2.90e-04	-1374.39	0.0	-2281.21	681.82	-20.27	8.69	-0.12	-	
9.23														
			-11.86	-5.94	-6.95e-05	0.0	24.4	-2281.21	-5.37	-20.27	8.69	-3.03		
73.44														
							48.9	-2281.21	-692.57	-20.27	8.69	-5.94	-	
11.86														
	38	87	66.69	13.81	8.45e-05	-1374.39	0.0	109.81	687.97	-15.76	-1.65	13.81	-	
17.49														
			-17.49	10.12	1.10e-05	0.0	24.4	109.81	0.78	-15.76	-1.65	11.96		
66.69														
							48.9	109.81	-686.42	-15.76	-1.65	10.12	-	

Viale Duca Alessandro n. 11 – 43123 Parma
Cell. 335 1403156 – E mail ing.concari@gmail.com
Sito web: studioaire.it – P.IVA 02561480340

17.11														
	38	89	69.47	5.09	-7.76e-05	-1374.39	0.0	-838.13	685.35	-16.30	3.25	5.09	-	
14.07														
			-14.98	0.87	-2.66e-05	0.0	24.4	-838.13	-1.85	-16.30	3.25	2.98		
69.47														
							48.9	-838.13	-689.04	-16.30	3.25	0.87	-	
14.98														
	38	92	70.22	7.28	-1.09e-04	-1374.39	0.0	-1147.59	684.78	-18.44	3.59	7.28	-	
13.18														
			-14.36	2.39	-2.99e-05	0.0	24.4	-1147.59	-2.41	-18.44	3.59	4.84		
70.22														
							48.9	-1147.59	-689.61	-18.44	3.59	2.39	-	
14.36														
	38	93	100.60	4.84	-7.84e-05	-2019.72	0.0	-906.72	1008.11	-19.94	4.16	4.84	-	
22.40														
			-23.26	-0.11	-2.67e-05	0.0	24.4	-906.72	-1.75	-19.94	4.16	2.37		
100.60														
							48.9	-906.72	-1011.61	-19.94	4.16	-0.11	-	
23.26														
	38	96	101.35	7.03	-1.10e-04	-2019.72	0.0	-1216.17	1007.55	-22.08	4.51	7.03	-	
21.51														
			-22.64	1.41	-3.00e-05	0.0	24.4	-1216.17	-2.31	-22.08	4.51	4.22		
101.35														
							48.9	-1216.17	-1012.17	-22.08	4.51	1.41	-	
22.64														
	38	101	69.47	5.09	-7.76e-05	-1374.39	0.0	-838.13	685.35	-16.30	3.25	5.09	-	
14.07														
			-14.98	0.87	-2.66e-05	0.0	24.4	-838.13	-1.85	-16.30	3.25	2.98		
69.47														
							48.9	-838.13	-689.04	-16.30	3.25	0.87	-	
14.98														
	38	105	75.69	5.04	-7.78e-05	-1503.46	0.0	-851.85	749.90	-17.03	3.43	5.04	-	
15.74														
			-16.63	0.67	-2.67e-05	0.0	24.4	-851.85	-1.83	-17.03	3.43	2.86		
75.69														
							48.9	-851.85	-753.55	-17.03	3.43	0.67	-	
16.63														
	38	108	76.29	6.79	-1.03e-04	-1503.46	0.0	-1099.42	749.45	-18.74	3.71	6.79	-	
15.03														
			-16.14	1.89	-2.93e-05	0.0	24.4	-1099.42	-2.28	-18.74	3.71	4.34		
76.29														
							48.9	-1099.42	-754.01	-18.74	3.71	1.89	-	
16.14														
	38	112	70.14	7.06	-1.06e-04	-1374.39	0.0	-1116.65	684.84	-18.23	3.56	7.06	-	
13.27														
			-14.43	2.24	-2.96e-05	0.0	24.4	-1116.65	-2.35	-18.23	3.56	4.65		
70.14														
							48.9	-1116.65	-689.55	-18.23	3.56	2.24	-	
14.43														
	38	113	69.47	5.09	-7.76e-05	-1374.39	0.0	-838.13	685.35	-16.30	3.25	5.09	-	
14.07														
			-14.98	0.87	-2.66e-05	0.0	24.4	-838.13	-1.85	-16.30	3.25	2.98		
69.47														
							48.9	-838.13	-689.04	-16.30	3.25	0.87	-	
14.98														
	38	116	70.07	6.84	-1.03e-04	-1374.39	0.0	-1085.70	684.90	-18.02	3.52	6.84	-	
13.36														
			-14.49	2.09	-2.93e-05	0.0	24.4	-1085.70	-2.30	-18.02	3.52	4.47		
70.07														
							48.9	-1085.70	-689.49	-18.02	3.52	2.09	-	
14.49														
	39	5	26.51	6.34	7.38e-04	-101.56	0.0	2513.31	158.84	-42.55	11.93	6.34	-	
27.53														
			-27.53	-0.96	-4.03e-05	0.0	25.0	2513.31	108.06	-42.55	11.93	2.69	5.84	
							50.0	2513.31	57.28	-42.55	11.93	-0.96		
26.51														
	39	6	33.44	5.55	8.87e-04	-101.56	0.0	2406.93	172.09	-37.39	10.77	5.55	-	
27.23														
			-27.23	-0.65	-4.68e-05	0.0	25.0	2406.93	121.31	-37.39	10.77	2.45	9.46	
							50.0	2406.93	70.53	-37.39	10.77	-0.65		
33.44														
	39	7	26.51	6.34	7.38e-04	-101.56	0.0	2513.31	158.84	-42.55	11.93	6.34	-	
27.53														
			-27.53	-0.96	-4.03e-05	0.0	25.0	2513.31	108.06	-42.55	11.93	2.69	5.84	
							50.0	2513.31	57.28	-42.55	11.93	-0.96		
26.51														
	39	10	26.51	2.99	6.65e-04	-78.12	0.0	1246.77	121.18	-17.79	5.43	2.99	-	
14.56														
			-14.56	0.24	-3.71e-05	0.0	25.0	1246.77	82.11	-17.79	5.43	1.61		
10.85														
							50.0	1246.77	43.05	-17.79	5.43	0.24		
26.51														
	39	25	0.14	7.32	2.00e-04	-78.12	0.0	3007.53	111.39	-36.63	17.04	7.32	-	
31.49														
			-31.49	-5.46	-3.55e-04	0.0	25.0	3007.53	72.33	-36.63	17.04	0.93	-	
10.79														
							50.0	3007.53	33.27	-36.63	17.04	-5.46	0.14	
	39	34	46.47	10.62	1.11e-03	-78.12	0.0	1731.60	189.85	-52.37	23.86	10.62	-	
28.83														
			-28.83	-8.75	1.75e-05	0.0	25.0	1731.60	150.79	-52.37	23.86	0.94		
13.70														
							50.0	1731.60	111.73	-52.37	23.86	-8.75		
46.47														
	39	44	89.84	4.55	2.34e-03	-78.12	0.0	-849.53	229.31	-26.20	8.71	4.55	-	
5.89														
			-5.89	-1.81	1.19e-04	0.0	25.0	-849.53	190.25	-26.20	8.71	1.37		
46.86														
							50.0	-849.53	151.18	-26.20	8.71	-1.81		

Viale Duca Alessandro n. 11 – 43123 Parma
Cell. 335 1403156 – E mail ing.concari@gmail.com
Sito web: studioaire.it – P.IVA 02561480340

89.84														
39	57	10.25	5.36	3.62e-04	-78.12	0.0	2132.00	108.81	-29.43	11.30	5.36	-		
22.65														
		-22.65	-2.51	-1.75e-04	0.0	25.0	2132.00	69.75	-29.43	11.30	1.43	-		
1.31														
						50.0	2132.00	30.69	-29.43	11.30	-2.51			
10.25														
39	66	33.50	6.55	8.21e-04	-78.12	0.0	1485.76	147.90	-34.37	13.85	6.55	-		
20.88														
		-20.88	-3.80	-1.15e-05	0.0	25.0	1485.76	108.84	-34.37	13.85	1.38			
11.19														
						50.0	1485.76	69.77	-34.37	13.85	-3.80			
33.50														
39	73	-5.57	2.77	-1.67e-04	-78.12	0.0	2283.93	65.42	-17.46	4.75	2.77	-		
19.08														
		-19.08	0.91	-1.04e-04	0.0	25.0	2283.93	26.36	-17.46	4.75	1.84	-		
7.72														
						50.0	2283.93	-12.70	-17.46	4.75	0.91	-		
6.12														
39	76	52.66	3.94	1.36e-03	-78.12	0.0	308.91	164.56	-22.94	7.20	3.94	-		
10.33														
		-10.33	-0.71	3.59e-05	0.0	25.0	308.91	125.50	-22.94	7.20	1.62			
26.05														
						50.0	308.91	86.44	-22.94	7.20	-0.71			
52.66														
39	90	24.19	3.25	6.15e-04	-78.12	0.0	1282.23	116.76	-19.51	5.82	3.25	-		
14.66														
		-14.66	0.14	-3.49e-05	0.0	25.0	1282.23	77.70	-19.51	5.82	1.70	9.65		
						50.0	1282.23	38.63	-19.51	5.82	0.14			
24.19														
39	93	20.28	4.73	5.61e-04	-78.12	0.0	1855.96	120.28	-31.43	8.84	4.73	-		
20.34														
		-20.34	-0.64	-3.10e-05	0.0	25.0	1855.96	81.22	-31.43	8.84	2.04	4.86		
						50.0	1855.96	42.16	-31.43	8.84	-0.64			
20.28														
39	94	24.91	4.20	6.60e-04	-78.12	0.0	1785.04	129.12	-27.99	8.06	4.20	-		
20.13														
		-20.13	-0.44	-3.53e-05	0.0	25.0	1785.04	90.06	-27.99	8.06	1.88	7.27		
						50.0	1785.04	50.99	-27.99	8.06	-0.44			
24.91														
39	95	20.28	4.73	5.61e-04	-78.12	0.0	1855.96	120.28	-31.43	8.84	4.73	-		
20.34														
		-20.34	-0.64	-3.10e-05	0.0	25.0	1855.96	81.22	-31.43	8.84	2.04	4.86		
						50.0	1855.96	42.16	-31.43	8.84	-0.64			
20.28														
39	105	19.71	3.97	5.25e-04	-78.12	0.0	1453.72	110.39	-24.65	7.04	3.97	-		
15.96														
		-15.96	-0.18	-3.07e-05	0.0	25.0	1453.72	71.33	-24.65	7.04	1.90	6.76		
						50.0	1453.72	32.27	-24.65	7.04	-0.18			
19.71														
39	107	19.71	3.97	5.25e-04	-78.12	0.0	1453.72	110.39	-24.65	7.04	3.97	-		
15.96														
		-15.96	-0.18	-3.07e-05	0.0	25.0	1453.72	71.33	-24.65	7.04	1.90	6.76		
						50.0	1453.72	32.27	-24.65	7.04	-0.18			
19.71														
39	111	23.73	3.30	6.06e-04	-78.12	0.0	1289.33	115.88	-19.86	5.90	3.30	-		
14.69														
		-14.69	0.12	-3.45e-05	0.0	25.0	1289.33	76.81	-19.86	5.90	1.71	9.41		
						50.0	1289.33	37.75	-19.86	5.90	0.12			
23.73														
39	113	19.57	3.78	5.16e-04	-78.12	0.0	1353.16	107.92	-22.96	6.60	3.78	-		
14.87														
		-14.87	-0.06	-3.06e-05	0.0	25.0	1353.16	68.86	-22.96	6.60	1.86	7.24		
						50.0	1353.16	29.80	-22.96	6.60	-0.06			
19.57														
39	114	23.27	3.36	5.96e-04	-78.12	0.0	1296.42	114.99	-20.20	5.97	3.36	-		
14.71														
		-14.71	0.10	-3.41e-05	0.0	25.0	1296.42	75.93	-20.20	5.97	1.73	9.17		
						50.0	1296.42	36.87	-20.20	5.97	0.10			
23.27														
39	115	19.57	3.78	5.16e-04	-78.12	0.0	1353.16	107.92	-22.96	6.60	3.78	-		
14.87														
		-14.87	-0.06	-3.06e-05	0.0	25.0	1353.16	68.86	-22.96	6.60	1.86	7.24		
						50.0	1353.16	29.80	-22.96	6.60	-0.06			
19.57														
40	2	85.74	6.52	-1.38e-04	-1786.71	0.0	492.84	890.90	38.00	-4.72	-6.28	-		
22.85														
		-24.05	-6.28	-4.36e-05	0.0	24.4	492.84	-2.45	38.00	-4.72	0.12			
85.74														
						48.9	492.84	-895.80	38.00	-4.72	6.52	-		
24.05														
40	4	85.74	6.52	-1.38e-04	-1786.71	0.0	492.84	890.90	38.00	-4.72	-6.28	-		
22.85														
		-24.05	-6.28	-4.36e-05	0.0	24.4	492.84	-2.45	38.00	-4.72	0.12			
85.74														
						48.9	492.84	-895.80	38.00	-4.72	6.52	-		
24.05														
40	5	133.45	8.59	-9.53e-05	-2754.71	0.0	130.32	1375.58	37.51	-6.67	-1.91	-		
34.46														
		-35.33	-1.91	-3.76e-05	0.0	24.4	130.32	-1.77	37.51	-6.67	3.34			
133.45														
						48.9	130.32	-1379.13	37.51	-6.67	8.59	-		
35.33														
40	6	132.65	8.09	-1.39e-04	-2754.71	0.0	350.33	1374.90	42.19	-6.35	-4.95	-		
35.09														
		-36.29	-4.95	-4.35e-05	0.0	24.4	350.33	-2.45	42.19	-6.35	1.57			
132.65														
						48.9	350.33	-1379.81	42.19	-6.35	8.09	-		

Viale Duca Alessandro n. 11 – 43123 Parma
Cell. 335 1403156 – E mail ing.concari@gmail.com
Sito web: studioaire.it – P.IVA 02561480340

36.29													
	40	7	133.45	8.59	-9.53e-05	-2754.71	0.0	130.32	1375.58	37.51	-6.67	-1.91	-
34.46													
			-35.33	-1.91	-3.76e-05	0.0	24.4	130.32	-1.77	37.51	-6.67	3.34	
133.45													
							48.9	130.32	-1379.13	37.51	-6.67	8.59	-
35.33													
	40	15	113.48	6.97	-7.36e-05	-2342.39	0.0	67.36	1169.83	29.82	-5.51	-1.16	-
29.33													
			-30.00	-1.16	-2.89e-05	0.0	24.4	67.36	-1.37	29.82	-5.51	2.90	
113.48													
							48.9	67.36	-1172.56	29.82	-5.51	6.97	-
30.00													
	40	50	58.26	-6.29	-4.99e-04	-1374.39	0.0	2965.96	677.84	30.63	-2.87	-17.16	-
23.46													
			-27.99	-17.16	-2.91e-04	0.0	24.4	2965.96	-9.36	30.63	-2.87	-11.72	
58.26													
							48.9	2965.96	-696.55	30.63	-2.87	-6.29	-
27.99													
	40	51	71.11	13.28	2.70e-04	-1374.39	0.0	-1304.31	691.40	28.45	-2.71	2.34	-
13.89													
			-13.89	2.34	2.24e-04	0.0	24.4	-1304.31	4.20	28.45	-2.71	7.81	
71.11													
							48.9	-1304.31	-682.99	28.45	-2.71	13.28	-
11.88													
	40	53	71.10	14.82	-4.92e-04	-1374.39	0.0	-1201.15	691.16	32.89	-6.99	1.18	-
13.88													
			-13.88	1.18	1.60e-04	0.0	24.4	-1201.15	3.97	32.89	-6.99	8.00	
71.10													
							48.9	-1201.15	-683.23	32.89	-6.99	14.82	-
11.90													
	40	82	62.66	0.09	-2.76e-04	-1374.39	0.0	1492.34	682.10	29.18	-3.32	-9.86	-
20.10													
			-22.57	-9.86	-1.46e-04	0.0	24.4	1492.34	-5.09	29.18	-3.32	-4.89	
62.66													
							48.9	1492.34	-692.29	29.18	-3.32	0.09	-
22.57													
	40	85	69.71	11.19	-2.75e-04	-1374.39	0.0	-855.98	688.67	31.17	-6.14	0.61	-
14.65													
			-14.65	0.61	5.03e-05	0.0	24.4	-855.98	1.47	31.17	-6.14	5.90	
69.71													
							48.9	-855.98	-685.72	31.17	-6.14	11.19	-
13.92													
	40	88	62.57	-0.91	8.27e-05	-1374.39	0.0	1510.39	682.28	25.07	-1.28	-8.84	-
20.20													
			-22.63	-8.84	-1.15e-04	0.0	24.4	1510.39	-4.92	25.07	-1.28	-4.88	
62.57													
							48.9	1510.39	-692.11	25.07	-1.28	-0.91	-
22.63													
	40	90	66.03	5.07	-1.02e-04	-1374.39	0.0	356.54	685.38	28.75	-3.67	-4.52	-
17.51													
			-18.40	-4.52	-3.30e-05	0.0	24.4	356.54	-1.81	28.75	-3.67	0.27	
66.03													
							48.9	356.54	-689.01	28.75	-3.67	5.07	-
18.40													
	40	92	66.03	5.07	-1.02e-04	-1374.39	0.0	356.54	685.38	28.75	-3.67	-4.52	-
17.51													
			-18.40	-4.52	-3.30e-05	0.0	24.4	356.54	-1.81	28.75	-3.67	0.27	
66.03													
							48.9	356.54	-689.01	28.75	-3.67	5.07	-
18.40													
	40	93	97.84	6.45	-7.32e-05	-2019.72	0.0	114.86	1008.50	28.42	-4.97	-1.61	-
25.25													
			-25.92	-1.61	-2.89e-05	0.0	24.4	114.86	-1.36	28.42	-4.97	2.42	
97.84													
							48.9	114.86	-1011.22	28.42	-4.97	6.45	-
25.92													
	40	94	97.31	6.11	-1.03e-04	-2019.72	0.0	261.54	1008.04	31.54	-4.75	-3.63	-
25.67													
			-26.56	-3.63	-3.29e-05	0.0	24.4	261.54	-1.82	31.54	-4.75	1.24	
97.31													
							48.9	261.54	-1011.68	31.54	-4.75	6.11	-
26.56													
	40	95	97.84	6.45	-7.32e-05	-2019.72	0.0	114.86	1008.50	28.42	-4.97	-1.61	-
25.25													
			-25.92	-1.61	-2.89e-05	0.0	24.4	114.86	-1.36	28.42	-4.97	2.42	
97.84													
							48.9	114.86	-1011.22	28.42	-4.97	6.45	-
25.92													
	40	105	72.82	5.61	-7.26e-05	-1503.46	0.0	190.86	750.37	26.19	-4.10	-2.32	-
18.72													
			-19.39	-2.32	-2.90e-05	0.0	24.4	190.86	-1.36	26.19	-4.10	1.65	
72.82													
							48.9	190.86	-753.09	26.19	-4.10	5.61	-
19.39													
	40	106	72.40	5.34	-9.61e-05	-1503.46	0.0	308.20	750.00	28.68	-3.93	-3.94	-
19.06													
			-19.90	-3.94	-3.22e-05	0.0	24.4	308.20	-1.72	28.68	-3.93	0.70	
72.40													
							48.9	308.20	-753.45	28.68	-3.93	5.34	-
19.90													
	40	107	72.82	5.61	-7.26e-05	-1503.46	0.0	190.86	750.37	26.19	-4.10	-2.32	-
18.72													
			-19.39	-2.32	-2.90e-05	0.0	24.4	190.86	-1.36	26.19	-4.10	1.65	
72.82													
							48.9	190.86	-753.09	26.19	-4.10	5.61	-
19.39													
	40	111	66.09	5.10	-9.89e-05	-1374.39	0.0	341.87	685.43	28.44	-3.69	-4.32	-

Viale Duca Alessandro n. 11 – 43123 Parma
Cell. 335 1403156 – E mail ing.concari@gmail.com
Sito web: studioaire.it – P.IVA 02561480340

														17.47
			-18.34	-4.32	-3.26e-05	0.0	24.4	341.87	-1.77	28.44	-3.69	0.39		66.09
							48.9	341.87	-688.96	28.44	-3.69	5.10	-	18.34
	40	112	66.09	5.10	-9.89e-05	-1374.39	0.0	341.87	685.43	28.44	-3.69	-4.32	-	17.47
			-18.34	-4.32	-3.26e-05	0.0	24.4	341.87	-1.77	28.44	-3.69	0.39		66.09
							48.9	341.87	-688.96	28.44	-3.69	5.10	-	18.34
	40	113	66.57	5.40	-7.24e-05	-1374.39	0.0	209.86	685.83	25.63	-3.88	-2.49	-	17.09
			-17.76	-2.49	-2.90e-05	0.0	24.4	209.86	-1.36	25.63	-3.88	1.45		66.57
							48.9	209.86	-688.55	25.63	-3.88	5.40	-	17.76
	40	114	66.14	5.14	-9.59e-05	-1374.39	0.0	327.20	685.47	28.12	-3.71	-4.11	-	17.43
			-18.27	-4.11	-3.22e-05	0.0	24.4	327.20	-1.72	28.12	-3.71	0.51		66.14
							48.9	327.20	-688.92	28.12	-3.71	5.14	-	18.27
	40	115	66.57	5.40	-7.24e-05	-1374.39	0.0	209.86	685.83	25.63	-3.88	-2.49	-	17.09
			-17.76	-2.49	-2.90e-05	0.0	24.4	209.86	-1.36	25.63	-3.88	1.45		66.57
							48.9	209.86	-688.55	25.63	-3.88	5.40	-	17.76
	40	116	66.14	5.14	-9.59e-05	-1374.39	0.0	327.20	685.47	28.12	-3.71	-4.11	-	17.43
			-18.27	-4.11	-3.22e-05	0.0	24.4	327.20	-1.72	28.12	-3.71	0.51		66.14
							48.9	327.20	-688.92	28.12	-3.71	5.14	-	18.27
	41	2	4.91	39.29	8.60e-04	-101.56	0.0	467.48	49.68	-366.89	98.56	39.29	-	1.17
			-1.71	-28.65	-4.65e-05	0.0	25.0	467.48	-1.10	-366.89	98.56	5.32	4.91	
							50.0	467.48	-51.88	-366.89	98.56	-28.65	-	1.71
	41	4	4.91	39.29	8.60e-04	-101.56	0.0	467.48	49.68	-366.89	98.56	39.29	-	1.17
			-1.71	-28.65	-4.65e-05	0.0	25.0	467.48	-1.10	-366.89	98.56	5.32	4.91	
							50.0	467.48	-51.88	-366.89	98.56	-28.65	-	1.71
	41	7	2.83	29.52	7.76e-04	-101.56	0.0	970.49	50.85	-268.08	72.34	29.52	-	3.54
			-3.54	-19.97	-3.95e-05	0.0	25.0	970.49	0.06	-268.08	72.34	4.78	2.83	
							50.0	970.49	-50.72	-268.08	72.34	-19.97	-	3.50
	41	10	3.83	32.23	6.98e-04	-78.12	0.0	334.99	38.06	-300.56	80.71	32.23	-	0.81
			-1.30	-23.46	-3.72e-05	0.0	25.0	334.99	-1.00	-300.56	80.71	4.39	3.83	
							50.0	334.99	-40.06	-300.56	80.71	-23.46	-	1.30
	41	37	6.71	32.35	2.39e-04	-78.12	0.0	-250.88	35.40	-305.15	89.26	32.35	2.68	
			0.89	-34.50	4.22e-05	0.0	25.0	-250.88	-3.66	-305.15	89.26	-1.07	6.67	
							50.0	-250.88	-42.72	-305.15	89.26	-34.50	0.89	
	41	38	7.82	37.23	1.17e-03	-78.12	0.0	-300.61	37.29	-303.91	91.93	37.23	3.37	
			2.50	-31.55	-4.80e-05	0.0	25.0	-300.61	-1.78	-303.91	91.93	2.84	7.82	
							50.0	-300.61	-40.84	-303.91	91.93	-31.55	2.50	
	41	39	-0.08	42.51	2.21e-04	-78.12	0.0	797.77	38.24	-446.30	108.95	42.51	-	4.76
			-5.17	-28.66	-4.51e-05	0.0	25.0	797.77	-0.82	-446.30	108.95	6.92	-	0.08
							50.0	797.77	-39.89	-446.30	108.95	-28.66	-	5.17
	41	40	1.06	47.39	1.15e-03	-78.12	0.0	748.04	40.12	-445.06	111.63	47.39	-	4.08
			-4.08	-25.72	-1.35e-04	0.0	25.0	748.04	1.06	-445.06	111.63	10.84	1.06	
							50.0	748.04	-38.01	-445.06	111.63	-25.72	-	3.56
	41	69	4.94	29.40	3.93e-04	-78.12	0.0	116.29	37.22	-278.06	77.88	29.40	0.51	
			-0.39	-26.76	-1.68e-06	0.0	25.0	116.29	-1.84	-278.06	77.88	1.32	4.94	
							50.0	116.29	-40.90	-278.06	77.88	-26.76	-	0.39
	41	70	5.52	32.17	8.65e-04	-78.12	0.0	84.06	37.90	-281.31	80.13	32.17	0.92	
			0.35	-25.42	-4.03e-05	0.0	25.0	84.06	-1.17	-281.31	80.13	3.37	5.52	
							50.0	84.06	-40.23	-281.31	80.13	-25.42	0.35	
	41	71	1.93	24.17	3.85e-04	-78.12	0.0	685.47	38.85	-245.63	61.51	24.17	-	2.91
			-3.00	-15.77	-2.83e-05	0.0	25.0	685.47	-0.21	-245.63	61.51	4.20	1.93	
							50.0	685.47	-39.27	-245.63	61.51	-15.77	-	3.00
	41	82	5.12	33.57	1.41e-03	-78.12	0.0	246.00	39.28	-272.96	76.71	33.57	0.19	
			0.19	-19.63	-1.37e-04	0.0	25.0	246.00	0.21	-272.96	76.71	6.97	5.12	
							50.0	246.00	-38.85	-272.96	76.71	-19.63	0.30	
	41	90	3.75	29.33	6.46e-04	-78.12	0.0	370.54	38.29	-274.07	73.65	29.33	-	0.94
			-1.32	-21.41	-3.51e-05	0.0	25.0	370.54	-0.78	-274.07	73.65	3.96	3.75	
							50.0	370.54	-39.84	-274.07	73.65	-21.41	-	1.32
	41	92	3.75	29.33	6.46e-04	-78.12	0.0	370.54	38.29	-274.07	73.65	29.33	-	0.94
			-1.32	-21.41	-3.51e-05	0.0	25.0	370.54	-0.78	-274.07	73.65	3.96	3.75	
							50.0	370.54	-39.84	-274.07	73.65	-21.41	-	1.32
	41	95	2.37	22.82	5.90e-04	-78.12	0.0	705.88	39.06	-208.20	56.16	22.82	-	

Viale Duca Alessandro n. 11 – 43123 Parma
Cell. 335 1403156 – E mail ing.concari@gmail.com
Sito web: studioaire.it – P.IVA 02561480340

2.52														
			-2.52	-15.62	-3.05e-05	0.0	25.0	705.88	-1.71e-03	-208.20	56.16	3.60	2.37	
							50.0	705.88	-39.06	-208.20	56.16	-15.62	-	
2.51														
	41	107	3.36	23.39	5.51e-04	-78.12	0.0	494.49	38.80	-218.50	58.85	23.39	-	
1.46														
			-1.59	-16.98	-3.08e-05	0.0	25.0	494.49	-0.27	-218.50	58.85	3.20	3.36	
							50.0	494.49	-39.33	-218.50	58.85	-16.98	-	
1.59														
	41	111	3.74	28.75	6.35e-04	-78.12	0.0	377.65	38.33	-268.77	72.23	28.75	-	
0.97														
			-1.32	-21.00	-3.47e-05	0.0	25.0	377.65	-0.73	-268.77	72.23	3.87	3.74	
							50.0	377.65	-39.80	-268.77	72.23	-21.00	-	
1.32														
	41	112	3.74	28.75	6.35e-04	-78.12	0.0	377.65	38.33	-268.77	72.23	28.75	-	
0.97														
			-1.32	-21.00	-3.47e-05	0.0	25.0	377.65	-0.73	-268.77	72.23	3.87	3.74	
							50.0	377.65	-39.80	-268.77	72.23	-21.00	-	
1.32														
	41	114	3.72	28.17	6.25e-04	-78.12	0.0	384.76	38.37	-263.47	70.82	28.17	-	
0.99														
			-1.33	-20.59	-3.43e-05	0.0	25.0	384.76	-0.69	-263.47	70.82	3.79	3.72	
							50.0	384.76	-39.75	-263.47	70.82	-20.59	-	
1.33														
	41	115	3.60	23.53	5.42e-04	-78.12	0.0	441.64	38.73	-221.07	59.52	23.53	-	
1.20														
			-1.36	-17.32	-3.09e-05	0.0	25.0	441.64	-0.33	-221.07	59.52	3.11	3.60	
							50.0	441.64	-39.40	-221.07	59.52	-17.32	-	
1.36														
	41	116	3.72	28.17	6.25e-04	-78.12	0.0	384.76	38.37	-263.47	70.82	28.17	-	
0.99														
			-1.33	-20.59	-3.43e-05	0.0	25.0	384.76	-0.69	-263.47	70.82	3.79	3.72	
							50.0	384.76	-39.75	-263.47	70.82	-20.59	-	
1.33														
	42	4	90.39	12.69	-1.47e-04	-1786.71	0.0	-1009.72	892.38	8.39	2.97	5.51	-	
18.56														
			-19.03	5.51	-4.21e-05	0.0	24.4	-1009.72	-0.97	8.39	2.97	9.10		
90.39														
							48.9	-1009.72	-894.33	8.39	2.97	12.69	-	
19.03														
	42	5	136.28	7.57	-1.02e-04	-2754.71	0.0	-823.63	1376.64	9.92	1.19	1.56	-	
31.89														
			-32.24	1.56	-3.64e-05	0.0	24.4	-823.63	-0.71	9.92	1.19	4.56		
136.28														
							48.9	-823.63	-1378.06	9.92	1.19	7.57	-	
32.24														
	42	8	137.13	11.60	-1.48e-04	-2754.71	0.0	-1125.12	1376.40	9.80	2.44	4.30	-	
30.98														
			-31.44	4.30	-4.21e-05	0.0	24.4	-1125.12	-0.95	9.80	2.44	7.95		
137.13														
							48.9	-1125.12	-1378.31	9.80	2.44	11.60	-	
31.44														
	42	9	68.87	6.66	-7.73e-05	-1374.39	0.0	-544.79	686.63	6.55	1.32	2.13	-	
14.98														
			-15.25	2.13	-2.80e-05	0.0	24.4	-544.79	-0.56	6.55	1.32	4.40		
68.87														
							48.9	-544.79	-687.75	6.55	1.32	6.66	-	
15.25														
	42	13	115.61	5.57	-7.84e-05	-2342.39	0.0	-660.20	1170.65	7.96	0.80	0.92	-	
27.40														
			-27.66	0.92	-2.80e-05	0.0	24.4	-660.20	-0.54	7.96	0.80	3.25		
115.61														
							48.9	-660.20	-1171.74	7.96	0.80	5.57	-	
27.66														
	42	41	65.59	35.13	-2.55e-04	-1374.39	0.0	463.30	686.10	3.17	4.41	27.41	-	
18.11														
			-18.68	27.41	-2.42e-04	0.0	24.4	463.30	-1.09	3.17	4.41	31.27		
65.59														
							48.9	463.30	-688.29	3.17	4.41	35.13	-	
18.68														
	42	46	75.12	-5.54	-2.33e-04	-1374.39	0.0	-2309.75	686.05	-11.79	7.12	-5.54	-	
8.58														
			-9.16	-9.25	8.47e-05	0.0	24.4	-2309.75	-1.14	-11.79	7.12	-7.40		
75.12														
							48.9	-2309.75	-688.34	-11.79	7.12	-9.25	-	
9.16														
	42	47	65.78	37.52	-1.66e-05	-1374.39	0.0	301.21	686.73	14.58	0.59	24.21	-	
18.10														
			-18.32	24.21	-1.49e-04	0.0	24.4	301.21	-0.47	14.58	0.59	30.87		
65.78														
							48.9	301.21	-687.66	14.58	0.59	37.52	-	
18.32														
	42	52	75.32	-5.88	-4.31e-06	-1374.39	0.0	-2473.78	686.59	2.12	3.68	-8.98	-	
8.53														
			-8.81	-8.98	-7.19e-05	0.0	24.4	-2473.78	-0.61	2.12	3.68	-7.43		
75.32														
							48.9	-2473.78	-687.80	2.12	3.68	-5.88	-	
8.81														
	42	53	65.58	34.03	-2.28e-04	-1374.39	0.0	467.71	686.19	0.45	3.88	27.64	-	
18.15														
			-18.67	27.64	1.24e-04	0.0	24.4	467.71	-1.00	0.45	3.88	30.83		
65.58														
							48.9	467.71	-688.20	0.45	3.88	34.03	-	
18.67														
	42	56	75.32	-5.75	-2.13e-05	-1374.39	0.0	-2476.26	686.59	2.34	3.83	-8.96	-	
8.53														
			-8.81	-8.96	-1.88e-04	0.0	24.4	-2476.26	-0.61	2.34	3.83	-7.36		
75.32														

Viale Duca Alessandro n. 11 – 43123 Parma
Cell. 335 1403156 – E mail ing.concari@gmail.com
Sito web: studioaire.it – P.IVA 02561480340

							48.9	-2476.26	-687.80	2.34	3.83	-5.75	-
8.81													
	42	73	66.76	16.04	-1.67e-04	-1374.39	0.0	12.54	686.33	11.35	1.42	8.45	-
17.01													
			-17.45	8.45	-1.25e-04	0.0	24.4	12.54	-0.86	11.35	1.42	12.25	
66.76													
							48.9	12.54	-688.06	11.35	1.42	16.04	-
17.45													
	42	79	66.77	16.78	-4.55e-05	-1374.39	0.0	2.02	686.70	14.54	-0.27	7.62	-
17.10													
			-17.34	7.62	-8.17e-05	0.0	24.4	2.02	-0.49	14.54	-0.27	12.20	
66.77													
							48.9	2.02	-687.69	14.54	-0.27	16.78	-
17.34													
	42	84	71.91	2.01	-4.09e-05	-1374.39	0.0	-1424.53	686.64	2.69	2.72	-1.37	-
11.95													
			-12.22	-1.37	-4.63e-05	0.0	24.4	-1424.53	-0.56	2.69	2.72	0.32	
71.91													
							48.9	-1424.53	-687.75	2.69	2.72	2.01	-
12.22													
	42	85	66.76	15.57	-1.55e-04	-1374.39	0.0	14.47	686.37	10.18	1.18	8.55	-
17.03													
			-17.44	8.55	3.49e-05	0.0	24.4	14.47	-0.83	10.18	1.18	12.06	
66.76													
							48.9	14.47	-688.02	10.18	1.18	15.57	-
17.44													
	42	88	71.90	2.06	-4.90e-05	-1374.39	0.0	-1425.64	686.64	2.79	2.79	-1.37	-
11.95													
			-12.22	-1.37	-9.70e-05	0.0	24.4	-1425.64	-0.56	2.79	2.79	0.35	
71.90													
							48.9	-1425.64	-687.75	2.79	2.79	2.06	-
12.22													
	42	89	68.87	6.66	-7.73e-05	-1374.39	0.0	-544.79	686.63	6.55	1.32	2.13	-
14.98													
			-15.25	2.13	-2.80e-05	0.0	24.4	-544.79	-0.56	6.55	1.32	4.40	
68.87													
							48.9	-544.79	-687.75	6.55	1.32	6.66	-
15.25													
	42	92	69.44	9.35	-1.08e-04	-1374.39	0.0	-745.79	686.47	6.46	2.15	3.96	-
14.37													
			-14.72	3.96	-3.18e-05	0.0	24.4	-745.79	-0.72	6.46	2.15	6.65	
69.44													
							48.9	-745.79	-687.92	6.46	2.15	9.35	-
14.72													
	42	93	100.03	5.93	-7.80e-05	-2019.72	0.0	-621.73	1009.31	7.49	0.97	1.32	-
23.26													
			-23.53	1.32	-2.80e-05	0.0	24.4	-621.73	-0.55	7.49	0.97	3.63	
100.03													
							48.9	-621.73	-1010.41	7.49	0.97	5.93	-
23.53													
	42	96	100.61	8.62	-1.09e-04	-2019.72	0.0	-822.72	1009.15	7.41	1.80	3.15	-
22.65													
			-23.00	3.15	-3.18e-05	0.0	24.4	-822.72	-0.71	7.41	1.80	5.89	
100.61													
							48.9	-822.72	-1010.57	7.41	1.80	8.62	-
23.00													
	42	101	68.87	6.66	-7.73e-05	-1374.39	0.0	-544.79	686.63	6.55	1.32	2.13	-
14.98													
			-15.25	2.13	-2.80e-05	0.0	24.4	-544.79	-0.56	6.55	1.32	4.40	
68.87													
							48.9	-544.79	-687.75	6.55	1.32	6.66	-
15.25													
	42	105	75.11	6.52	-7.75e-05	-1503.46	0.0	-560.18	751.17	6.74	1.25	1.97	-
16.64													
			-16.91	1.97	-2.80e-05	0.0	24.4	-560.18	-0.56	6.74	1.25	4.24	
75.11													
							48.9	-560.18	-752.29	6.74	1.25	6.52	-
16.91													
	42	108	75.56	8.67	-1.02e-04	-1503.46	0.0	-720.97	751.04	6.67	1.92	3.43	-
16.15													
			-16.48	3.43	-3.10e-05	0.0	24.4	-720.97	-0.69	6.67	1.92	6.05	
75.56													
							48.9	-720.97	-752.42	6.67	1.92	8.67	-
16.48													
	42	112	69.39	9.08	-1.05e-04	-1374.39	0.0	-725.69	686.49	6.47	2.07	3.77	-
14.43													
			-14.78	3.77	-3.14e-05	0.0	24.4	-725.69	-0.71	6.47	2.07	6.43	
69.39													
							48.9	-725.69	-687.90	6.47	2.07	9.08	-
14.78													
	42	113	68.87	6.66	-7.73e-05	-1374.39	0.0	-544.79	686.63	6.55	1.32	2.13	-
14.98													
			-15.25	2.13	-2.80e-05	0.0	24.4	-544.79	-0.56	6.55	1.32	4.40	
68.87													
							48.9	-544.79	-687.75	6.55	1.32	6.66	-
15.25													
	42	116	69.33	8.81	-1.02e-04	-1374.39	0.0	-705.59	686.50	6.48	1.99	3.59	-
14.49													
			-14.83	3.59	-3.10e-05	0.0	24.4	-705.59	-0.69	6.48	1.99	6.20	
69.33													
							48.9	-705.59	-687.89	6.48	1.99	8.81	-
14.83													
	43	2	69.73	6.17	8.28e-04	-101.56	0.0	-597.82	125.40	-56.92	14.35	6.17	
32.41													
			32.41	-6.14	-4.62e-05	0.0	25.0	-597.82	74.62	-56.92	14.35	0.02	
57.42													
							50.0	-597.82	23.84	-56.92	14.35	-6.14	
69.73													

Viale Duca Alessandro n. 11 – 43123 Parma
Cell. 335 1403156 – E mail ing.concari@gmail.com
Sito web: studioaire.it – P.IVA 02561480340

43	5	64.47	7.61	7.44e-04	-101.56	0.0	87.50	126.62	-67.36	16.90	7.61	
26.54												
		26.54	-6.55	-4.00e-05	0.0	25.0	87.50	75.84	-67.36	16.90	0.53	
51.85												
						50.0	87.50	25.06	-67.36	16.90	-6.55	
64.47												
43	6	77.33	7.40	8.95e-04	-101.56	0.0	-286.79	138.47	-68.76	17.17	7.40	
33.48												
		33.48	-7.37	-4.66e-05	0.0	25.0	-286.79	87.68	-68.76	17.17	0.01	
61.75												
						50.0	-286.79	36.90	-68.76	17.17	-7.37	
77.33												
43	8	77.33	7.40	8.95e-04	-101.56	0.0	-286.79	138.47	-68.76	17.17	7.40	
33.48												
		33.48	-7.37	-4.66e-05	0.0	25.0	-286.79	87.68	-68.76	17.17	0.01	
61.75												
						50.0	-286.79	36.90	-68.76	17.17	-7.37	
77.33												
43	11	43.75	4.92	5.21e-04	-78.12	0.0	-171.95	87.35	-42.71	10.83	4.92	
19.59												
		19.59	-4.09	-3.04e-05	0.0	25.0	-171.95	48.29	-42.71	10.83	0.41	
36.55												
						50.0	-171.95	9.23	-42.71	10.83	-4.09	
43.75												
43	15	51.35	6.14	5.88e-04	-78.12	0.0	139.08	100.42	-54.55	13.65	6.14	
20.66												
		20.66	-5.32	-3.09e-05	0.0	25.0	139.08	61.35	-54.55	13.65	0.41	
40.89												
						50.0	139.08	22.29	-54.55	13.65	-5.32	
51.35												
43	34	94.13	12.70	1.13e-03	-78.12	0.0	-1118.63	134.52	-84.91	32.31	12.70	
46.50												
		46.50	-17.42	2.38e-05	0.0	25.0	-1118.63	95.46	-84.91	32.31	-2.36	
75.20												
						50.0	-1118.63	56.39	-84.91	32.31	-17.42	
94.13												
43	41	-8.62	4.02	-7.07e-04	-78.12	0.0	2159.55	53.67	-39.96	9.78	4.02	-
21.90												
		-21.90	-2.64	-2.11e-04	0.0	25.0	2159.55	14.61	-39.96	9.78	0.69	-
10.68												
						50.0	2159.55	-24.45	-39.96	9.78	-2.64	-
9.22												
43	44	148.44	5.17	2.37e-03	-78.12	0.0	-4155.57	166.84	-52.05	13.27	5.17	
89.90												
		89.90	-8.77	1.38e-04	0.0	25.0	-4155.57	127.78	-52.05	13.27	-1.80	
124.05												
						50.0	-4155.57	88.72	-52.05	13.27	-8.77	
148.44												
43	46	155.46	9.18	2.37e-03	-78.12	0.0	-3800.71	173.94	-71.73	23.83	9.18	
88.07												
		88.07	-14.48	6.60e-05	0.0	25.0	-3800.71	134.88	-71.73	23.83	-2.65	
126.65												
						50.0	-3800.71	95.81	-71.73	23.83	-14.48	
155.46												
43	66	69.76	8.28	8.31e-04	-78.12	0.0	-701.32	111.62	-61.71	20.37	8.28	
33.52												
		33.52	-10.21	-8.65e-06	0.0	25.0	-701.32	72.56	-61.71	20.37	-0.97	
56.52												
						50.0	-701.32	33.50	-61.71	20.37	-10.21	
69.76												
43	73	8.13	4.58	-1.76e-04	-78.12	0.0	1316.92	62.02	-39.53	9.92	4.58	-
6.11												
		-6.11	-2.69	-1.12e-04	0.0	25.0	1316.92	22.96	-39.53	9.92	0.95	5.69
						50.0	1316.92	-16.11	-39.53	9.92	-2.69	7.73
43	76	93.49	5.02	1.38e-03	-78.12	0.0	-2060.06	125.32	-47.38	12.03	5.02	
52.70												
		52.70	-6.37	4.45e-05	0.0	25.0	-2060.06	86.26	-47.38	12.03	-0.68	
77.97												
						50.0	-2060.06	47.20	-47.38	12.03	-6.37	
93.49												
43	78	96.81	6.73	1.38e-03	-78.12	0.0	-1883.81	129.00	-55.90	16.63	6.73	
51.86												
		51.86	-8.91	9.82e-06	0.0	25.0	-1883.81	89.94	-55.90	16.63	-1.09	
79.22												
						50.0	-1883.81	50.88	-55.90	16.63	-8.91	
96.81												
43	90	52.32	4.77	6.21e-04	-78.12	0.0	-421.47	95.25	-43.64	11.01	4.77	
24.22												
		24.22	-4.64	-3.48e-05	0.0	25.0	-421.47	56.19	-43.64	11.01	0.07	
43.15												
						50.0	-421.47	17.12	-43.64	11.01	-4.64	
52.32												
43	91	43.75	4.92	5.21e-04	-78.12	0.0	-171.95	87.35	-42.71	10.83	4.92	
19.59												
		19.59	-4.09	-3.04e-05	0.0	25.0	-171.95	48.29	-42.71	10.83	0.41	
36.55												
						50.0	-171.95	9.23	-42.71	10.83	-4.09	
43.75												
43	93	48.81	5.73	5.65e-04	-78.12	0.0	35.40	96.06	-50.61	12.71	5.73	
20.30												
		20.30	-4.91	-3.07e-05	0.0	25.0	35.40	57.00	-50.61	12.71	0.41	
39.44												
						50.0	35.40	17.94	-50.61	12.71	-4.91	
48.81												
43	94	57.39	5.59	6.66e-04	-78.12	0.0	-214.12	103.96	-51.54	12.89	5.59	
24.93												
		24.93	-5.46	-3.51e-05	0.0	25.0	-214.12	64.90	-51.54	12.89	0.06	
46.04												

Viale Duca Alessandro n. 11 – 43123 Parma
Cell. 335 1403156 – E mail ing.concari@gmail.com
Sito web: studioaire.it – P.IVA 02561480340

						50.0	-214.12	25.83	-51.54	12.89	-5.46
57.39											
43	95	48.81	5.73	5.65e-04	-78.12	0.0	35.40	96.06	-50.61	12.71	5.73
20.30											
		20.30	-4.91	-3.07e-05	0.0	25.0	35.40	57.00	-50.61	12.71	0.41
39.44											
						50.0	35.40	17.94	-50.61	12.71	-4.91
48.81											
43	96	57.39	5.59	6.66e-04	-78.12	0.0	-214.12	103.96	-51.54	12.89	5.59
24.93											
		24.93	-5.46	-3.51e-05	0.0	25.0	-214.12	64.90	-51.54	12.89	0.06
46.04											
						50.0	-214.12	25.83	-51.54	12.89	-5.46
57.39											
43	105	44.76	5.08	5.29e-04	-78.12	0.0	-130.48	89.10	-44.29	11.21	5.08
19.73											
		19.73	-4.25	-3.05e-05	0.0	25.0	-130.48	50.03	-44.29	11.21	0.41
37.13											
						50.0	-130.48	10.97	-44.29	11.21	-4.25
44.76											
43	106	51.62	4.96	6.10e-04	-78.12	0.0	-330.10	95.41	-45.04	11.35	4.96
23.43											
		23.43	-4.69	-3.40e-05	0.0	25.0	-330.10	56.35	-45.04	11.35	0.14
42.41											
						50.0	-330.10	17.29	-45.04	11.35	-4.69
51.62											
43	107	44.76	5.08	5.29e-04	-78.12	0.0	-130.48	89.10	-44.29	11.21	5.08
19.73											
		19.73	-4.25	-3.05e-05	0.0	25.0	-130.48	50.03	-44.29	11.21	0.41
37.13											
						50.0	-130.48	10.97	-44.29	11.21	-4.25
44.76											
43	108	51.62	4.96	6.10e-04	-78.12	0.0	-330.10	95.41	-45.04	11.35	4.96
23.43											
		23.43	-4.69	-3.40e-05	0.0	25.0	-330.10	56.35	-45.04	11.35	0.14
42.41											
						50.0	-330.10	17.29	-45.04	11.35	-4.69
51.62											
43	109	43.75	4.92	5.21e-04	-78.12	0.0	-171.95	87.35	-42.71	10.83	4.92
19.59											
		19.59	-4.09	-3.04e-05	0.0	25.0	-171.95	48.29	-42.71	10.83	0.41
36.55											
						50.0	-171.95	9.23	-42.71	10.83	-4.09
43.75											
43	111	51.46	4.78	6.11e-04	-78.12	0.0	-396.52	94.46	-43.55	10.99	4.78
23.75											
		23.75	-4.58	-3.44e-05	0.0	25.0	-396.52	55.40	-43.55	10.99	0.10
42.49											
						50.0	-396.52	16.33	-43.55	10.99	-4.58
51.46											
43	113	43.75	4.92	5.21e-04	-78.12	0.0	-171.95	87.35	-42.71	10.83	4.92
19.59											
		19.59	-4.09	-3.04e-05	0.0	25.0	-171.95	48.29	-42.71	10.83	0.41
36.55											
						50.0	-171.95	9.23	-42.71	10.83	-4.09
43.75											
43	114	50.61	4.80	6.01e-04	-78.12	0.0	-371.57	93.67	-43.46	10.98	4.80
23.29											
		23.29	-4.53	-3.40e-05	0.0	25.0	-371.57	54.61	-43.46	10.98	0.14
41.83											
						50.0	-371.57	15.54	-43.46	10.98	-4.53
50.61											
43	115	43.75	4.92	5.21e-04	-78.12	0.0	-171.95	87.35	-42.71	10.83	4.92
19.59											
		19.59	-4.09	-3.04e-05	0.0	25.0	-171.95	48.29	-42.71	10.83	0.41
36.55											
						50.0	-171.95	9.23	-42.71	10.83	-4.09
43.75											
43	116	50.61	4.80	6.01e-04	-78.12	0.0	-371.57	93.67	-43.46	10.98	4.80
23.29											
		23.29	-4.53	-3.40e-05	0.0	25.0	-371.57	54.61	-43.46	10.98	0.14
41.83											
						50.0	-371.57	15.54	-43.46	10.98	-4.53
50.61											
44	2	85.05	5.45	-1.39e-04	-1786.71	0.0	539.52	893.03	-14.33	1.89	5.45 -
24.06											
		-24.21	0.70	-4.42e-05	0.0	24.4	539.52	-0.32	-14.33	1.89	3.08
85.05											
						48.9	539.52	-893.67	-14.33	1.89	0.70 -
24.21											
44	5	132.96	7.20	-9.56e-05	-2754.71	0.0	174.58	1377.13	-13.93	2.38	7.20 -
35.33											
		-35.44	3.16	-3.80e-05	0.0	24.4	174.58	-0.22	-13.93	2.38	5.18
132.96											
						48.9	174.58	-1377.58	-13.93	2.38	3.16 -
35.44											
44	6	131.97	6.72	-1.40e-04	-2754.71	0.0	396.18	1377.03	-15.84	2.36	6.72 -
36.30											
		-36.46	1.75	-4.42e-05	0.0	24.4	396.18	-0.32	-15.84	2.36	4.23
131.97											
						48.9	396.18	-1377.67	-15.84	2.36	1.75 -
36.46											
44	7	132.96	7.20	-9.56e-05	-2754.71	0.0	174.58	1377.13	-13.93	2.38	7.20 -
35.33											
		-35.44	3.16	-3.80e-05	0.0	24.4	174.58	-0.22	-13.93	2.38	5.18
132.96											
						48.9	174.58	-1377.58	-13.93	2.38	3.16 -
35.44											

Viale Duca Alessandro n. 11 – 43123 Parma
Cell. 335 1403156 – E mail ing.concari@gmail.com
Sito web: studioaire.it – P.IVA 02561480340

44	12	65.20	4.09	-1.17e-04	-1374.39	0.0	466.15	686.93	-11.47	1.45	4.09	-
18.73												
		-18.86	0.22	-3.54e-05	0.0	24.4	466.15	-0.27	-11.47	1.45	2.15	
65.20												
						48.9	466.15	-687.46	-11.47	1.45	0.22	-
18.86												
44	15	113.10	5.83	-7.38e-05	-2342.39	0.0	101.22	1171.02	-11.06	1.94	5.83	-
30.00												
		-30.09	2.67	-2.93e-05	0.0	24.4	101.22	-0.17	-11.06	1.94	4.25	
113.10												
						48.9	101.22	-1171.37	-11.06	1.94	2.67	-
30.09												
44	42	55.97	-6.14	-1.97e-04	-1374.39	0.0	2963.88	687.02	-16.82	2.68	-6.14	-
27.93												
		-28.12	-12.63	-3.40e-05	0.0	24.4	2963.88	-0.18	-16.82	2.68	-9.38	
55.97												
						48.9	2963.88	-687.37	-16.82	2.68	-12.63	-
28.12												
44	43	72.01	12.22	-3.44e-05	-1374.39	0.0	-1265.82	686.88	-11.96	1.22	12.22	-
11.95												
		-12.01	9.29	-3.41e-05	0.0	24.4	-1265.82	-0.32	-11.96	1.22	10.76	
72.01												
						48.9	-1265.82	-687.51	-11.96	1.22	9.29	-
12.01												
44	46	55.97	-6.31	-2.36e-04	-1374.39	0.0	2965.20	687.00	-16.29	2.35	-6.31	-
27.92												
		-28.11	-12.54	8.23e-05	0.0	24.4	2965.20	-0.20	-16.29	2.35	-9.42	
55.97												
						48.9	2965.20	-687.39	-16.29	2.35	-12.54	-
28.11												
44	47	72.01	12.39	5.32e-06	-1374.39	0.0	-1267.14	686.90	-12.49	1.55	12.39	-
11.96												
		-12.01	9.20	-1.50e-04	0.0	24.4	-1267.14	-0.30	-12.49	1.55	10.80	
72.01												
						48.9	-1267.14	-687.49	-12.49	1.55	9.20	-
12.01												
44	48	56.13	-3.43	2.93e-05	-1374.39	0.0	2873.75	687.19	-24.84	6.90	-3.43	-
27.90												
		-27.90	-14.33	5.85e-05	0.0	24.4	2873.75	-9.07e-03	-24.84	6.90	-8.88	
56.13												
						48.9	2873.75	-687.20	-24.84	6.90	-14.33	-
27.81												
44	73	69.93	8.00	-1.52e-04	-1374.39	0.0	-803.01	686.84	-4.19	-1.00	8.00	-
13.95												
		-14.18	7.68	-1.26e-04	0.0	24.4	-803.01	-0.36	-4.19	-1.00	7.84	
69.93												
						48.9	-803.01	-687.55	-4.19	-1.00	7.68	-
14.18												
44	74	61.38	-0.30	-1.40e-04	-1374.39	0.0	1511.33	686.99	-13.33	1.99	-0.30	-
22.54												
		-22.69	-5.08	-3.30e-05	0.0	24.4	1511.33	-0.20	-13.33	1.99	-2.69	
61.38												
						48.9	1511.33	-687.40	-13.33	1.99	-5.08	-
22.69												
44	75	69.94	8.92	-5.31e-05	-1374.39	0.0	-785.85	686.95	-7.82	0.92	8.92	-
14.01												
		-14.08	6.82	-3.20e-05	0.0	24.4	-785.85	-0.24	-7.82	0.92	7.87	
69.94												
						48.9	-785.85	-687.44	-7.82	0.92	6.82	-
14.08												
44	76	61.39	0.61	-4.10e-05	-1374.39	0.0	1528.49	687.11	-16.95	3.91	0.61	-
22.60												
		-22.60	-5.94	6.11e-05	0.0	24.4	1528.49	-0.09	-16.95	3.91	-2.66	
61.39												
						48.9	1528.49	-687.28	-16.95	3.91	-5.94	-
22.60												
44	79	69.94	8.99	-3.61e-05	-1374.39	0.0	-786.40	686.96	-8.05	1.06	8.99	-
14.01												
		-14.09	6.78	-8.28e-05	0.0	24.4	-786.40	-0.23	-8.05	1.06	7.89	
69.94												
						48.9	-786.40	-687.43	-8.05	1.06	6.78	-
14.09												
44	80	61.39	0.69	-2.40e-05	-1374.39	0.0	1527.94	687.11	-17.19	4.05	0.69	-
22.60												
		-22.60	-5.98	1.03e-05	0.0	24.4	1527.94	-0.08	-17.19	4.05	-2.65	
61.39												
						48.9	1527.94	-687.28	-17.19	4.05	-5.98	-
22.60												
44	90	65.53	4.25	-1.02e-04	-1374.39	0.0	392.29	686.96	-10.83	1.45	4.25	-
18.40												
		-18.52	0.68	-3.33e-05	0.0	24.4	392.29	-0.24	-10.83	1.45	2.46	
65.53												
						48.9	392.29	-687.43	-10.83	1.45	0.68	-
18.52												
44	92	65.53	4.25	-1.02e-04	-1374.39	0.0	392.29	686.96	-10.83	1.45	4.25	-
18.40												
		-18.52	0.68	-3.33e-05	0.0	24.4	392.29	-0.24	-10.83	1.45	2.46	
65.53												
						48.9	392.29	-687.43	-10.83	1.45	0.68	-
18.52												
44	93	97.46	5.41	-7.35e-05	-2019.72	0.0	149.00	1009.69	-10.56	1.78	5.41	-
25.92												
		-26.01	2.32	-2.92e-05	0.0	24.4	149.00	-0.17	-10.56	1.78	3.86	
97.46												
						48.9	149.00	-1010.03	-10.56	1.78	2.32	-
26.01												
44	94	96.80	5.09	-1.03e-04	-2019.72	0.0	296.73	1009.63	-11.83	1.77	5.09	-
26.57												

Viale Duca Alessandro n. 11 – 43123 Parma
Cell. 335 1403156 – E mail ing.concari@gmail.com
Sito web: studioaire.it – P.IVA 02561480340

			-26.68	1.38	-3.33e-05	0.0	24.4	296.73	-0.24	-11.83	1.77	3.24	96.80
							48.9	296.73	-1010.10	-11.83	1.77	1.38	-26.68
	44	95	97.46	5.41	-7.35e-05	-2019.72	0.0	149.00	1009.69	-10.56	1.78	5.41	-25.92
			-26.01	2.32	-2.92e-05	0.0	24.4	149.00	-0.17	-10.56	1.78	3.86	97.46
							48.9	149.00	-1010.03	-10.56	1.78	2.32	-26.01
	44	105	72.44	4.73	-7.29e-05	-1503.46	0.0	225.44	751.56	-9.75	1.53	4.73	-19.39
			-19.48	1.76	-2.92e-05	0.0	24.4	225.44	-0.17	-9.75	1.53	3.25	72.44
							48.9	225.44	-751.90	-9.75	1.53	1.76	-19.48
	44	106	71.91	4.48	-9.66e-05	-1503.46	0.0	343.63	751.51	-10.77	1.52	4.48	-19.91
			-20.02	1.01	-3.25e-05	0.0	24.4	343.63	-0.22	-10.77	1.52	2.74	71.91
							48.9	343.63	-751.95	-10.77	1.52	1.01	-20.02
	44	107	72.44	4.73	-7.29e-05	-1503.46	0.0	225.44	751.56	-9.75	1.53	4.73	-19.39
			-19.48	1.76	-2.92e-05	0.0	24.4	225.44	-0.17	-9.75	1.53	3.25	72.44
							48.9	225.44	-751.90	-9.75	1.53	1.76	-19.48
	44	111	65.59	4.28	-9.94e-05	-1374.39	0.0	377.52	686.97	-10.70	1.45	4.28	-18.34
			-18.45	0.78	-3.29e-05	0.0	24.4	377.52	-0.23	-10.70	1.45	2.53	65.59
							48.9	377.52	-687.42	-10.70	1.45	0.78	-18.45
	44	112	65.59	4.28	-9.94e-05	-1374.39	0.0	377.51	686.97	-10.70	1.45	4.28	-18.34
			-18.45	0.78	-3.29e-05	0.0	24.4	377.51	-0.23	-10.70	1.45	2.53	65.59
							48.9	377.51	-687.42	-10.70	1.45	0.78	-18.45
	44	113	66.19	4.57	-7.28e-05	-1374.39	0.0	244.56	687.02	-9.55	1.47	4.57	-17.76
			-17.85	1.62	-2.92e-05	0.0	24.4	244.56	-0.17	-9.55	1.47	3.09	66.19
							48.9	244.56	-687.37	-9.55	1.47	1.62	-17.85
	44	114	65.66	4.31	-9.65e-05	-1374.39	0.0	362.74	686.97	-10.57	1.46	4.31	-18.28
			-18.39	0.87	-3.25e-05	0.0	24.4	362.74	-0.22	-10.57	1.46	2.59	65.66
							48.9	362.74	-687.42	-10.57	1.46	0.87	-18.39
	44	115	66.19	4.57	-7.28e-05	-1374.39	0.0	244.56	687.02	-9.55	1.47	4.57	-17.76
			-17.85	1.62	-2.92e-05	0.0	24.4	244.56	-0.17	-9.55	1.47	3.09	66.19
							48.9	244.56	-687.37	-9.55	1.47	1.62	-17.85
	44	116	65.66	4.31	-9.65e-05	-1374.39	0.0	362.74	686.97	-10.57	1.46	4.31	-18.28
			-18.39	0.87	-3.25e-05	0.0	24.4	362.74	-0.22	-10.57	1.46	2.59	65.66
							48.9	362.74	-687.42	-10.57	1.46	0.87	-18.39
	45	1	3.16	26.87	7.03e-04	-101.56	0.0	458.68	44.58	-296.94	83.98	26.87	-1.74
			-4.83	-21.80	-4.15e-05	0.0	25.0	458.68	-6.20	-296.94	83.98	2.54	3.07
							50.0	458.68	-56.98	-296.94	83.98	-21.80	-4.83
	45	4	2.70	33.94	8.60e-04	-101.56	0.0	389.01	42.18	-372.99	105.39	33.94	-1.68
			-5.96	-27.06	-4.81e-05	0.0	25.0	389.01	-8.60	-372.99	105.39	3.44	2.53
							50.0	389.01	-59.38	-372.99	105.39	-27.06	-5.96
	45	7	1.40	26.64	7.75e-04	-101.56	0.0	747.01	44.43	-284.71	80.93	26.64	-3.47
			-6.63	-19.92	-4.06e-05	0.0	25.0	747.01	-6.36	-284.71	80.93	3.36	1.30
							50.0	747.01	-57.14	-284.71	80.93	-19.92	-6.63
	45	8	0.94	33.71	9.31e-04	-101.56	0.0	677.34	42.03	-360.76	102.33	33.71	-3.41
			-7.77	-25.17	-4.72e-05	0.0	25.0	677.34	-8.75	-360.76	102.33	4.27	0.76
							50.0	677.34	-59.54	-360.76	102.33	-25.17	-7.77
	45	10	1.97	27.74	6.97e-04	-78.12	0.0	283.16	31.89	-304.47	86.00	27.74	-1.27
			-4.85	-22.03	-3.85e-05	0.0	25.0	283.16	-7.17	-304.47	86.00	2.86	1.82
							50.0	283.16	-46.23	-304.47	86.00	-22.03	-4.85
	45	30	7.44	35.56	1.16e-03	-78.12	0.0	-243.85	40.03	-297.64	94.94	35.56	2.50
			2.50	-23.31	-3.67e-04	0.0	25.0	-243.85	0.97	-297.64	94.94	6.13	7.44
							50.0	-243.85	-38.10	-297.64	94.94	-23.31	2.62
	45	31	-3.20	32.21	2.32e-04	-78.12	0.0	677.53	23.72	-481.28	122.23	32.21	-5.11
			-12.40	-39.96	2.69e-04	0.0	25.0	677.53	-15.34	-481.28	122.23	-3.87	-3.88
							50.0	677.53	-54.40	-481.28	122.23	-39.96	-12.40

Viale Duca Alessandro n. 11 – 43123 Parma
Cell. 335 1403156 – E mail ing.concari@gmail.com
Sito web: studioaire.it – P.IVA 02561480340

45	38	7.60	35.39	1.17e-03	-78.12	0.0	-215.79	28.71	-307.12	99.39	35.39	2.53	
		2.53	-27.54	-4.96e-05	0.0	25.0	-215.79	-10.35	-307.12	99.39	3.92	7.60	
						50.0	-215.79	-49.42	-307.12	99.39	-27.54	2.91	
45	51	-3.55	16.84	-6.98e-04	-78.12	0.0	709.78	18.89	-314.43	82.22	16.84	-	4.78
		-14.52	-25.58	1.97e-04	0.0	25.0	709.78	-20.17	-314.43	82.22	-4.37	-	4.76
						50.0	709.78	-59.23	-314.43	82.22	-25.58	-	14.52
45	55	-3.58	16.89	-7.03e-04	-78.12	0.0	701.37	22.29	-311.59	80.89	16.89	-	4.79
		-14.60	-24.31	1.02e-04	0.0	25.0	701.37	-16.77	-311.59	80.89	-3.71	-	4.81
						50.0	701.37	-55.84	-311.59	80.89	-24.31	-	14.60
45	56	4.79	42.58	2.42e-03	-78.12	0.0	51.89	39.97	-339.56	98.13	42.58	0.63	
		-0.83	-13.05	-1.99e-04	0.0	25.0	51.89	0.91	-339.56	98.13	14.76	4.78	
						50.0	51.89	-38.15	-339.56	98.13	-13.05	-	0.83
45	62	4.46	29.35	8.59e-04	-78.12	0.0	70.26	36.16	-281.69	84.39	29.35	0.36	
		-1.26	-21.25	-1.81e-04	0.0	25.0	70.26	-2.91	-281.69	84.39	4.05	4.44	
						50.0	70.26	-41.97	-281.69	84.39	-21.25	-	1.26
45	63	-0.05	19.53	3.90e-04	-78.12	0.0	561.08	29.87	-256.27	67.64	19.53	-	2.97
		-7.38	-17.90	1.10e-04	0.0	25.0	561.08	-9.19	-256.27	67.64	0.82	-	0.29
						50.0	561.08	-48.25	-256.27	67.64	-17.90	-	7.38
45	69	3.50	25.36	3.92e-04	-78.12	0.0	171.00	29.68	-283.66	83.97	25.36	-	0.37
		-2.51	-26.09	-3.13e-06	0.0	25.0	171.00	-9.38	-283.66	83.97	-0.37	3.44	
						50.0	171.00	-48.44	-283.66	83.97	-26.09	-	2.51
45	70	4.53	29.27	8.66e-04	-78.12	0.0	82.57	31.08	-285.81	86.33	29.27	0.38	
		-1.13	-23.09	-4.17e-05	0.0	25.0	82.57	-7.98	-285.81	86.33	3.09	4.51	
						50.0	82.57	-47.04	-285.81	86.33	-23.09	-	1.13
45	71	-0.10	19.61	3.83e-04	-78.12	0.0	548.77	34.94	-252.14	65.70	19.61	-	2.99
		-7.50	-16.06	-2.91e-05	0.0	25.0	548.77	-4.12	-252.14	65.70	1.77	-	0.36
						50.0	548.77	-43.18	-252.14	65.70	-16.06	-	7.50
45	82	4.42	31.85	1.41e-03	-78.12	0.0	107.94	36.08	-276.05	82.11	31.85	0.33	
		-1.30	-15.52	-1.38e-04	0.0	25.0	107.94	-2.98	-276.05	82.11	8.16	4.40	
						50.0	107.94	-42.05	-276.05	82.11	-15.52	-	1.30
45	89	2.43	20.67	5.41e-04	-78.12	0.0	352.83	34.29	-228.42	64.60	20.67	-	1.34
		-3.71	-16.77	-3.19e-05	0.0	25.0	352.83	-4.77	-228.42	64.60	1.95	2.36	
						50.0	352.83	-43.83	-228.42	64.60	-16.77	-	3.71
45	90	2.12	25.38	6.45e-04	-78.12	0.0	306.38	32.69	-279.12	78.87	25.38	-	1.30
		-4.47	-20.27	-3.63e-05	0.0	25.0	306.38	-6.37	-279.12	78.87	2.55	2.00	
						50.0	306.38	-45.43	-279.12	78.87	-20.27	-	4.47
45	92	2.12	25.38	6.45e-04	-78.12	0.0	306.38	32.69	-279.12	78.87	25.38	-	1.30
		-4.47	-20.27	-3.63e-05	0.0	25.0	306.38	-6.37	-279.12	78.87	2.55	2.00	
						50.0	306.38	-45.43	-279.12	78.87	-20.27	-	4.47
45	95	1.25	20.52	5.89e-04	-78.12	0.0	545.05	34.19	-220.27	62.57	20.52	-	2.49
		-4.92	-15.52	-3.13e-05	0.0	25.0	545.05	-4.87	-220.27	62.57	2.50	1.18	
						50.0	545.05	-43.94	-220.27	62.57	-15.52	-	4.92
45	96	0.95	25.23	6.93e-04	-78.12	0.0	498.60	32.59	-270.97	76.83	25.23	-	2.45
		-5.67	-19.02	-3.57e-05	0.0	25.0	498.60	-6.47	-270.97	76.83	3.11	0.82	
						50.0	498.60	-45.53	-270.97	76.83	-19.02	-	5.67
45	101	2.43	20.67	5.41e-04	-78.12	0.0	352.83	34.29	-228.42	64.60	20.67	-	1.34
		-3.71	-16.77	-3.19e-05	0.0	25.0	352.83	-4.77	-228.42	64.60	1.95	2.36	
						50.0	352.83	-43.83	-228.42	64.60	-16.77	-	3.71
45	107	2.19	20.64	5.51e-04	-78.12	0.0	391.27	34.27	-226.79	64.20	20.64	-	1.57
		-3.95	-16.52	-3.18e-05	0.0	25.0	391.27	-4.79	-226.79	64.20	2.06	2.12	
						50.0	391.27	-43.85	-226.79	64.20	-16.52	-	3.95
45	108	1.95	24.41	6.34e-04	-78.12	0.0	354.12	32.99	-267.35	75.61	24.41	-	1.53
		-4.56	-19.32	-3.53e-05	0.0	25.0	354.12	-6.07	-267.35	75.61	2.54	1.84	
						50.0	354.12	-45.13	-267.35	75.61	-19.32	-	4.56
45	111	2.15	24.91	6.35e-04	-78.12	0.0	311.03	32.85	-274.05	77.44	24.91	-	1.30
		-4.39	-19.92	-3.59e-05	0.0	25.0	311.03	-6.21	-274.05	77.44	2.49	2.04	
						50.0	311.03	-45.27	-274.05	77.44	-19.92	-	4.39
45	112	2.15	24.91	6.35e-04	-78.12	0.0	311.03	32.85	-274.05	77.44	24.91	-	1.30
		-4.39	-19.92	-3.59e-05	0.0	25.0	311.03	-6.21	-274.05	77.44	2.49	2.04	
						50.0	311.03	-45.27	-274.05	77.44	-19.92	-	4.39

Viale Duca Alessandro n. 11 – 43123 Parma
Cell. 335 1403156 – E mail ing.concari@gmail.com
Sito web: studioaire.it – P.IVA 02561480340

45	113	2.43	20.67	5.41e-04	-78.12	0.0	352.83	34.29	-228.42	64.60	20.67	-1.34	
		-3.71	-16.77	-3.19e-05	0.0	25.0	352.83	-4.77	-228.42	64.60	1.95	2.36	
						50.0	352.83	-43.83	-228.42	64.60	-16.77	-3.71	
45	114	2.18	24.44	6.24e-04	-78.12	0.0	315.67	33.01	-268.98	76.02	24.44	-1.30	
		-4.32	-19.57	-3.54e-05	0.0	25.0	315.67	-6.05	-268.98	76.02	2.43	2.07	
						50.0	315.67	-45.11	-268.98	76.02	-19.57	-4.32	
45	115	2.43	20.67	5.41e-04	-78.12	0.0	352.83	34.29	-228.42	64.60	20.67	-1.34	
		-3.71	-16.77	-3.19e-05	0.0	25.0	352.83	-4.77	-228.42	64.60	1.95	2.36	
						50.0	352.83	-43.83	-228.42	64.60	-16.77	-3.71	
45	116	2.18	24.44	6.24e-04	-78.12	0.0	315.67	33.01	-268.98	76.02	24.44	-1.30	
		-4.32	-19.57	-3.54e-05	0.0	25.0	315.67	-6.05	-268.98	76.02	2.43	2.07	
						50.0	315.67	-45.11	-268.98	76.02	-19.57	-4.32	
46	4	90.31	14.43	-1.47e-04	-1786.71	0.0	-1272.87	894.04	-20.82	3.82	14.43	-19.04	
		-19.04	8.65	-4.32e-05	0.0	24.4	-1272.87	0.69	-20.82	3.82	11.54	90.31	
						48.9	-1272.87	-892.67	-20.82	3.82	8.65	-18.71	
46	5	136.19	7.40	-1.01e-04	-2754.71	0.0	-974.51	1377.74	-0.47	-1.39	7.40	-32.25	
		-32.25	5.69	-3.71e-05	0.0	24.4	-974.51	0.39	-0.47	-1.39	6.54	136.19	
						48.9	-974.51	-1376.96	-0.47	-1.39	5.69	-32.06	
46	8	137.04	12.48	-1.47e-04	-2754.71	0.0	-1381.93	1377.97	-11.51	1.27	12.48	-31.45	
		-31.45	8.38	-4.32e-05	0.0	24.4	-1381.93	0.62	-11.51	1.27	10.43	137.04	
						48.9	-1381.93	-1376.74	-11.51	1.27	8.38	-31.15	
46	9	68.82	7.19	-7.71e-05	-1374.39	0.0	-665.74	687.55	-7.52	0.89	7.19	-15.26	
		-15.26	4.58	-2.86e-05	0.0	24.4	-665.74	0.35	-7.52	0.89	5.88	68.82	
						48.9	-665.74	-686.84	-7.52	0.89	4.58	-15.09	
46	13	115.55	5.24	-7.80e-05	-2342.39	0.0	-774.79	1171.48	1.79	-1.66	5.24	-27.67	
		-27.67	4.31	-2.85e-05	0.0	24.4	-774.79	0.29	1.79	-1.66	4.78	115.55	
						48.9	-774.79	-1170.91	1.79	-1.66	4.31	-27.53	
46	41	63.45	40.54	-3.40e-04	-1374.39	0.0	880.13	679.59	-46.42	12.67	40.54	-18.69	
		-22.40	28.08	-2.45e-04	0.0	24.4	880.13	-7.60	-46.42	12.67	34.31	63.45	
						48.9	880.13	-694.80	-46.42	12.67	28.08	-22.40	
46	44	77.56	-6.97	9.19e-05	-1374.39	0.0	-3633.02	696.87	-6.09	-0.85	-7.13	-8.80	
		-8.80	-7.13	1.77e-04	0.0	24.4	-3633.02	9.68	-6.09	-0.85	-7.05	77.56	
						48.9	-3633.02	-677.52	-6.09	-0.85	-6.97	-4.07	
46	46	76.94	-5.97	-3.48e-04	-1374.39	0.0	-3456.40	695.84	-9.40	2.12	-5.97	-9.16	
		-9.16	-8.01	8.18e-05	0.0	24.4	-3456.40	8.65	-9.40	2.12	-6.99	76.94	
						48.9	-3456.40	-678.55	-9.40	2.12	-8.01	-4.93	
46	73	65.64	17.78	-2.05e-04	-1374.39	0.0	281.73	683.52	-18.16	3.89	17.78	-17.46	
		-19.25	11.59	-1.26e-04	0.0	24.4	281.73	-3.67	-18.16	3.89	14.69	65.64	
						48.9	281.73	-690.87	-18.16	3.89	11.59	-19.25	
46	76	72.90	2.02	-2.39e-06	-1374.39	0.0	-2047.78	691.81	-8.66	0.73	2.02	-12.21	
		-12.21	0.44	6.25e-05	0.0	24.4	-2047.78	4.62	-8.66	0.73	1.23	72.90	
						48.9	-2047.78	-682.58	-8.66	0.73	0.44	-9.96	
46	78	72.66	2.89	-2.09e-04	-1374.39	0.0	-2018.48	691.28	-11.63	2.22	2.89	-12.33	
		-12.33	-0.18	1.79e-05	0.0	24.4	-2018.48	4.08	-11.63	2.22	1.36	72.66	
						48.9	-2018.48	-683.11	-11.63	2.22	-0.18	-10.33	
46	89	68.82	7.19	-7.71e-05	-1374.39	0.0	-665.74	687.55	-7.52	0.89	7.19	-15.26	
		-15.26	4.58	-2.86e-05	0.0	24.4	-665.74	0.35	-7.52	0.89	5.88	68.82	
						48.9	-665.74	-686.84	-7.52	0.89	4.58	-15.09	
46	92	69.38	10.58	-1.08e-04	-1374.39	0.0	-937.35	687.70	-14.88	2.66	10.58	-14.73	
		-14.73	6.38	-3.26e-05	0.0	24.4	-937.35	0.50	-14.88	2.66	8.48	69.38	
						48.9	-937.35	-686.69	-14.88	2.66	6.38	-14.48	

Viale Duca Alessandro n. 11 – 43123 Parma
Cell. 335 1403156 – E mail ing.concari@gmail.com
Sito web: studioaire.it – P.IVA 02561480340

46	93	99.97	5.89	-7.77e-05	-2019.72	0.0	-738.44	1010.17	-1.31	-0.81	5.89	-23.53
		-23.53	4.40	-2.85e-05	0.0	24.4	-738.44	0.31	-1.31	-0.81	5.15	99.97
						48.9	-738.44	-1009.55	-1.31	-0.81	4.40	-23.38
46	96	100.54	9.28	-1.09e-04	-2019.72	0.0	-1010.05	1010.32	-8.68	0.97	9.28	-23.00
		-23.00	6.20	-3.26e-05	0.0	24.4	-1010.05	0.46	-8.68	0.97	7.74	100.54
						48.9	-1010.05	-1009.40	-8.68	0.97	6.20	-22.78
46	101	68.82	7.19	-7.71e-05	-1374.39	0.0	-665.74	687.55	-7.52	0.89	7.19	-15.26
		-15.26	4.58	-2.86e-05	0.0	24.4	-665.74	0.35	-7.52	0.89	5.88	68.82
						48.9	-665.74	-686.84	-7.52	0.89	4.58	-15.09
46	105	75.05	6.93	-7.73e-05	-1503.46	0.0	-680.28	752.07	-6.28	0.55	6.93	-16.91
		-16.91	4.54	-2.86e-05	0.0	24.4	-680.28	0.34	-6.28	0.55	5.74	75.05
						48.9	-680.28	-751.38	-6.28	0.55	4.54	-16.75
46	108	75.50	9.64	-1.02e-04	-1503.46	0.0	-897.57	752.19	-12.17	1.97	9.64	-16.49
		-16.49	5.98	-3.18e-05	0.0	24.4	-897.57	0.46	-12.17	1.97	7.81	75.50
						48.9	-897.57	-751.26	-12.17	1.97	5.98	-16.26
46	112	69.33	10.24	-1.05e-04	-1374.39	0.0	-910.19	687.68	-14.14	2.49	10.24	-14.78
		-14.78	6.20	-3.22e-05	0.0	24.4	-910.19	0.49	-14.14	2.49	8.22	69.33
						48.9	-910.19	-686.71	-14.14	2.49	6.20	-14.54
46	113	68.82	7.19	-7.71e-05	-1374.39	0.0	-665.74	687.55	-7.52	0.89	7.19	-15.26
		-15.26	4.58	-2.86e-05	0.0	24.4	-665.74	0.35	-7.52	0.89	5.88	68.82
						48.9	-665.74	-686.84	-7.52	0.89	4.58	-15.09
46	116	69.27	9.90	-1.02e-04	-1374.39	0.0	-883.03	687.67	-13.41	2.31	9.90	-14.83
		-14.83	6.02	-3.18e-05	0.0	24.4	-883.03	0.47	-13.41	2.31	7.96	69.27
						48.9	-883.03	-686.72	-13.41	2.31	6.02	-14.60
47	1	56.90	4.32	6.90e-04	-101.56	0.0	-1450.86	-8.07	-78.72	19.40	4.32	56.90
		27.48	-12.62	-4.02e-05	0.0	25.0	-1450.86	-58.86	-78.72	19.40	-4.15	48.54
						50.0	-1450.86	-109.64	-78.72	19.40	-12.62	27.48
47	6	77.37	4.23	9.12e-04	-101.56	0.0	-1990.81	-30.31	-95.35	22.82	4.23	77.37
		36.84	-16.99	-4.77e-05	0.0	25.0	-1990.81	-81.09	-95.35	22.82	-6.38	63.45
						50.0	-1990.81	-131.88	-95.35	22.82	-16.99	36.84
47	8	77.37	4.23	9.12e-04	-101.56	0.0	-1990.81	-30.31	-95.35	22.82	4.23	77.37
		36.84	-16.99	-4.77e-05	0.0	25.0	-1990.81	-81.09	-95.35	22.82	-6.38	63.45
						50.0	-1990.81	-131.88	-95.35	22.82	-16.99	36.84
47	9	43.77	3.32	5.31e-04	-78.12	0.0	-1116.04	-6.21	-60.55	14.92	3.32	43.77
		21.14	-9.70	-3.09e-05	0.0	25.0	-1116.04	-45.27	-60.55	14.92	-3.19	37.33
						50.0	-1116.04	-84.34	-60.55	14.92	-9.70	21.14
47	11	43.77	3.32	5.31e-04	-78.12	0.0	-1116.04	-6.21	-60.55	14.92	3.32	43.77
		21.14	-9.70	-3.09e-05	0.0	25.0	-1116.04	-45.27	-60.55	14.92	-3.19	37.33
						50.0	-1116.04	-84.34	-60.55	14.92	-9.70	21.14
47	33	44.85	11.38	2.13e-04	-78.12	0.0	-890.41	-19.94	-114.90	39.55	11.38	44.85
		16.28	-23.51	-3.33e-05	0.0	25.0	-890.41	-59.00	-114.90	39.55	-6.07	35.45
						50.0	-890.41	-98.07	-114.90	39.55	-23.51	16.28
47	34	94.16	9.66	1.15e-03	-78.12	0.0	-2543.76	-60.13	-106.72	38.36	9.66	94.16
		45.58	-24.53	2.47e-05	0.0	25.0	-2543.76	-99.19	-106.72	38.36	-7.43	74.75
						50.0	-2543.76	-138.26	-106.72	38.36	-24.53	45.58
47	41	-6.54	8.07	-7.13e-04	-78.12	0.0	767.24	27.96	-113.50	28.68	8.07	-9.21
		-14.28	-18.13	-2.17e-04	0.0	25.0	767.24	-11.11	-113.50	28.68	-5.03	-6.87
						50.0	767.24	-50.17	-113.50	28.68	-18.13	-14.28
47	43	-12.37	4.35	-7.05e-04	-78.12	0.0	342.72	34.48	-97.32	19.10	4.35	-15.86

Viale Duca Alessandro n. 11 – 43123 Parma
Cell. 335 1403156 – E mail ing.concari@gmail.com
Sito web: studioaire.it – P.IVA 02561480340

		-18.87	-13.92	-5.13e-05	0.0	25.0	342.72	-4.58	-97.32	19.10	-4.78	-
12.48												
						50.0	342.72	-43.64	-97.32	19.10	-13.92	-
18.87												
47	44	148.50	-1.35	2.41e-03	-78.12	0.0	-5168.45	-99.48	-70.08	15.14	-1.35	
148.50												
		78.77	-17.31	1.42e-04	0.0	25.0	-5168.45	-138.54	-70.08	15.14	-9.33	
118.52												
						50.0	-5168.45	-177.61	-70.08	15.14	-17.31	
78.77												
47	46	155.52	2.74	2.41e-03	-78.12	0.0	-4985.22	-108.48	-89.21	26.26	2.74	
155.52												
		82.19	-22.56	7.17e-05	0.0	25.0	-4985.22	-147.54	-89.21	26.26	-9.91	
123.74												
						50.0	-4985.22	-186.60	-89.21	26.26	-22.56	
82.19												
47	65	43.10	6.82	3.75e-04	-78.12	0.0	-957.85	-10.83	-82.58	25.33	6.82	
43.10												
		18.62	-15.38	-3.43e-05	0.0	25.0	-957.85	-49.89	-82.58	25.33	-4.28	
35.74												
						50.0	-957.85	-88.95	-82.58	25.33	-15.38	
18.62												
47	66	69.79	6.10	8.48e-04	-78.12	0.0	-1901.20	-34.32	-85.29	26.23	6.10	
69.79												
		33.60	-17.40	-8.66e-06	0.0	25.0	-1901.20	-73.38	-85.29	26.23	-5.65	
56.57												
						50.0	-1901.20	-112.44	-85.29	26.23	-17.40	
33.60												
47	73	9.60	5.28	-1.76e-04	-78.12	0.0	274.10	23.71	-67.23	17.22	5.28	7.73
		0.28	-9.33	-1.15e-04	0.0	25.0	274.10	-15.36	-67.23	17.22	-2.02	8.89
						50.0	274.10	-54.42	-67.23	17.22	-9.33	0.28
47	75	6.74	3.70	-1.72e-04	-78.12	0.0	83.35	26.72	-60.45	13.09	3.70	4.57
		-1.93	-7.46	-3.96e-05	0.0	25.0	83.35	-12.35	-60.45	13.09	-1.88	6.20
						50.0	83.35	-51.41	-60.45	13.09	-7.46	-
1.93												
47	76	93.52	1.29	1.40e-03	-78.12	0.0	-3061.16	-51.59	-69.49	16.09	1.29	
93.52												
		48.00	-14.22	4.58e-05	0.0	25.0	-3061.16	-90.66	-69.49	16.09	-6.47	
75.64												
						50.0	-3061.16	-129.72	-69.49	16.09	-14.22	
48.00												
47	78	96.85	3.03	1.40e-03	-78.12	0.0	-2976.58	-55.69	-77.56	20.89	3.03	
96.85												
		49.69	-16.54	1.20e-05	0.0	25.0	-2976.58	-94.75	-77.56	20.89	-6.75	
78.15												
						50.0	-2976.58	-133.81	-77.56	20.89	-16.54	
49.69												
47	89	43.77	3.32	5.31e-04	-78.12	0.0	-1116.04	-6.21	-60.55	14.92	3.32	
43.77												
		21.14	-9.70	-3.09e-05	0.0	25.0	-1116.04	-45.27	-60.55	14.92	-3.19	
37.33												
						50.0	-1116.04	-84.34	-60.55	14.92	-9.70	
21.14												
47	91	43.77	3.32	5.31e-04	-78.12	0.0	-1116.04	-6.21	-60.55	14.92	3.32	
43.77												
		21.14	-9.70	-3.09e-05	0.0	25.0	-1116.04	-45.27	-60.55	14.92	-3.19	
37.33												
						50.0	-1116.04	-84.34	-60.55	14.92	-9.70	
21.14												
47	94	57.41	3.27	6.79e-04	-78.12	0.0	-1476.02	-21.04	-71.64	17.20	3.27	
57.41												
		27.38	-12.62	-3.59e-05	0.0	25.0	-1476.02	-60.10	-71.64	17.20	-4.68	
47.28												
						50.0	-1476.02	-99.16	-71.64	17.20	-12.62	
27.38												
47	96	57.41	3.27	6.79e-04	-78.12	0.0	-1476.02	-21.04	-71.64	17.20	3.27	
57.41												
		27.38	-12.62	-3.59e-05	0.0	25.0	-1476.02	-60.10	-71.64	17.20	-4.68	
47.28												
						50.0	-1476.02	-99.16	-71.64	17.20	-12.62	
27.38												
47	101	43.77	3.32	5.31e-04	-78.12	0.0	-1116.04	-6.21	-60.55	14.92	3.32	
43.77												
		21.14	-9.70	-3.09e-05	0.0	25.0	-1116.04	-45.27	-60.55	14.92	-3.19	
37.33												
						50.0	-1116.04	-84.34	-60.55	14.92	-9.70	
21.14												
47	108	51.64	3.28	6.22e-04	-78.12	0.0	-1396.15	-14.98	-68.63	16.68	3.28	
51.64												
		24.63	-11.84	-3.47e-05	0.0	25.0	-1396.15	-54.04	-68.63	16.68	-4.28	
43.02												
						50.0	-1396.15	-93.10	-68.63	16.68	-11.84	
24.63												
47	109	43.77	3.32	5.31e-04	-78.12	0.0	-1116.04	-6.21	-60.55	14.92	3.32	
43.77												
		21.14	-9.70	-3.09e-05	0.0	25.0	-1116.04	-45.27	-60.55	14.92	-3.19	
37.33												
						50.0	-1116.04	-84.34	-60.55	14.92	-9.70	
21.14												
47	111	51.49	3.28	6.23e-04	-78.12	0.0	-1428.21	-14.91	-69.34	16.87	3.28	
51.49												
		24.51	-12.03	-3.51e-05	0.0	25.0	-1428.21	-53.97	-69.34	16.87	-4.38	
42.88												
						50.0	-1428.21	-93.04	-69.34	16.87	-12.03	
24.51												
47	113	43.77	3.32	5.31e-04	-78.12	0.0	-1116.04	-6.21	-60.55	14.92	3.32	
43.77												
		21.14	-9.70	-3.09e-05	0.0	25.0	-1116.04	-45.27	-60.55	14.92	-3.19	

Viale Duca Alessandro n. 11 – 43123 Parma
Cell. 335 1403156 – E mail ing.concari@gmail.com
Sito web: studioaire.it – P.IVA 02561480340

37.33												
						50.0	-1116.04	-84.34	-60.55	14.92	-9.70	
21.14												
47	114	50.63	3.29	6.13e-04	-78.12	0.0	-1393.53	-13.94	-68.36	16.65	3.29	
50.63												
		24.14	-11.78	-3.47e-05	0.0	25.0	-1393.53	-53.01	-68.36	16.65	-4.25	
42.27												
						50.0	-1393.53	-92.07	-68.36	16.65	-11.78	
24.14												
47	115	43.77	3.32	5.31e-04	-78.12	0.0	-1116.04	-6.21	-60.55	14.92	3.32	
43.77												
		21.14	-9.70	-3.09e-05	0.0	25.0	-1116.04	-45.27	-60.55	14.92	-3.19	
37.33												
						50.0	-1116.04	-84.34	-60.55	14.92	-9.70	
21.14												
47	116	50.63	3.29	6.13e-04	-78.12	0.0	-1393.53	-13.94	-68.36	16.65	3.29	
50.63												
		24.14	-11.78	-3.47e-05	0.0	25.0	-1393.53	-53.01	-68.36	16.65	-4.25	
42.27												
						50.0	-1393.53	-92.07	-68.36	16.65	-11.78	
24.14												
48	2	85.19	3.53	-1.40e-04	-1786.71	0.0	579.95	894.25	-27.07	7.97	3.53	-
24.22												
		-24.22	-0.79	-4.52e-05	0.0	24.4	579.95	0.90	-27.07	7.97	1.37	
85.19												
						48.9	579.95	-892.45	-27.07	7.97	-0.79	-
23.78												
48	5	133.05	6.95	-9.60e-05	-2754.71	0.0	211.48	1377.99	-35.70	11.12	6.95	-
35.45												
		-35.45	1.95	-3.88e-05	0.0	24.4	211.48	0.64	-35.70	11.12	4.45	
133.05												
						48.9	211.48	-1376.72	-35.70	11.12	1.95	-
35.14												
48	6	132.09	5.42	-1.41e-04	-2754.71	0.0	436.72	1378.21	-34.74	10.56	5.42	-
36.46												
		-36.46	0.27	-4.53e-05	0.0	24.4	436.72	0.86	-34.74	10.56	2.84	
132.09												
						48.9	436.72	-1376.50	-34.74	10.56	0.27	-
36.05												
48	7	133.05	6.95	-9.60e-05	-2754.71	0.0	211.48	1377.99	-35.70	11.12	6.95	-
35.45												
		-35.45	1.95	-3.88e-05	0.0	24.4	211.48	0.64	-35.70	11.12	4.45	
133.05												
						48.9	211.48	-1376.72	-35.70	11.12	1.95	-
35.14												
48	12	65.31	2.36	-1.18e-04	-1374.39	0.0	498.10	687.94	-20.60	6.00	2.36	-
18.86												
		-18.86	-0.99	-3.62e-05	0.0	24.4	498.10	0.74	-20.60	6.00	0.68	
65.31												
						48.9	498.10	-686.45	-20.60	6.00	-0.99	-
18.50												
48	15	113.17	5.78	-7.40e-05	-2342.39	0.0	129.62	1171.67	-29.24	9.15	5.78	-
30.09												
		-30.09	1.74	-2.99e-05	0.0	24.4	129.62	0.48	-29.24	9.15	3.76	
113.17												
						48.9	129.62	-1170.71	-29.24	9.15	1.74	-
29.86												
48	42	57.35	-10.38	-3.17e-04	-1374.39	0.0	2997.32	693.14	-25.71	7.14	-10.38	-
28.12												
		-28.12	-15.78	-4.16e-05	0.0	24.4	2997.32	5.95	-25.71	7.14	-13.08	
57.35												
						48.9	2997.32	-681.25	-25.71	7.14	-15.78	-
25.17												
48	43	71.06	11.71	8.36e-05	-1374.39	0.0	-1272.18	683.53	-19.42	4.83	11.71	-
12.01												
		-13.85	8.50	-2.90e-05	0.0	24.4	-1272.18	-3.66	-19.42	4.83	10.11	
71.06												
						48.9	-1272.18	-690.86	-19.42	4.83	8.50	-
13.85												
48	44	57.75	-8.40	1.04e-04	-1374.39	0.0	2845.15	693.76	-31.54	10.37	-8.40	-
27.82												
		-27.82	-17.33	1.75e-04	0.0	24.4	2845.15	6.56	-31.54	10.37	-12.86	
57.75												
						48.9	2845.15	-680.63	-31.54	10.37	-17.33	-
24.66												
48	47	71.08	11.98	9.98e-05	-1374.39	0.0	-1271.24	683.61	-19.67	5.21	11.98	-
12.02												
		-13.81	8.68	-1.51e-04	0.0	24.4	-1271.24	-3.59	-19.67	5.21	10.33	
71.08												
						48.9	-1271.24	-690.78	-19.67	5.21	8.68	-
13.81												
48	74	62.04	-2.87	-1.93e-04	-1374.39	0.0	1543.71	690.18	-23.10	6.65	-2.87	-
22.69												
		-22.69	-7.07	-3.69e-05	0.0	24.4	1543.71	2.98	-23.10	6.65	-4.97	
62.04												
						48.9	1543.71	-684.21	-23.10	6.65	-7.07	-
21.22												
48	75	69.47	9.01	-3.40e-06	-1374.39	0.0	-757.74	685.49	-18.99	5.87	9.01	-
14.09												
		-14.94	6.66	-2.96e-05	0.0	24.4	-757.74	-1.70	-18.99	5.87	7.83	
69.47												
						48.9	-757.74	-688.90	-18.99	5.87	6.66	-
14.94												
48	76	62.19	-2.02	9.27e-06	-1374.39	0.0	1523.00	690.51	-26.78	8.28	-2.02	-
22.60												
		-22.60	-8.08	6.10e-05	0.0	24.4	1523.00	3.32	-26.78	8.28	-5.05	
62.19												
						48.9	1523.00	-683.88	-26.78	8.28	-8.08	-

Viale Duca Alessandro n. 11 – 43123 Parma
Cell. 335 1403156 – E mail ing.concari@gmail.com
Sito web: studioaire.it – P.IVA 02561480340

21.00												
48	79	69.48	9.13	6.09e-06	-1374.39	0.0	-757.26	685.52	-19.11	6.04	9.13	-
14.09												
		-14.93	6.74	-8.28e-05	0.0	24.4	-757.26	-1.67	-19.11	6.04	7.93	
69.48												
						48.9	-757.26	-688.87	-19.11	6.04	6.74	-
14.93												
48	90	65.63	2.87	-1.03e-04	-1374.39	0.0	423.02	687.86	-20.92	6.19	2.87	-
18.53												
		-18.53	-0.43	-3.41e-05	0.0	24.4	423.02	0.67	-20.92	6.19	1.22	
65.63												
						48.9	423.02	-686.53	-20.92	6.19	-0.43	-
18.20												
48	92	65.63	2.87	-1.03e-04	-1374.39	0.0	423.02	687.86	-20.92	6.19	2.87	-
18.53												
		-18.53	-0.43	-3.41e-05	0.0	24.4	423.02	0.67	-20.92	6.19	1.22	
65.63												
						48.9	423.02	-686.53	-20.92	6.19	-0.43	-
18.20												
48	93	97.54	5.15	-7.38e-05	-2019.72	0.0	177.37	1010.36	-26.68	8.29	5.15	-
26.01												
		-26.01	1.39	-2.99e-05	0.0	24.4	177.37	0.49	-26.68	8.29	3.27	
97.54												
						48.9	177.37	-1009.37	-26.68	8.29	1.39	-
25.77												
48	94	96.89	4.13	-1.03e-04	-2019.72	0.0	327.53	1010.50	-26.04	7.92	4.13	-
26.69												
		-26.69	0.27	-3.41e-05	0.0	24.4	327.53	0.64	-26.04	7.92	2.20	
96.89												
						48.9	327.53	-1009.22	-26.04	7.92	0.27	-
26.38												
48	95	97.54	5.15	-7.38e-05	-2019.72	0.0	177.37	1010.36	-26.68	8.29	5.15	-
26.01												
		-26.01	1.39	-2.99e-05	0.0	24.4	177.37	0.49	-26.68	8.29	3.27	
97.54												
						48.9	177.37	-1009.37	-26.68	8.29	1.39	-
25.77												
48	105	72.52	4.14	-7.33e-05	-1503.46	0.0	253.76	752.24	-22.58	6.90	4.14	-
19.48												
		-19.48	0.83	-2.98e-05	0.0	24.4	253.76	0.52	-22.58	6.90	2.49	
72.52												
						48.9	253.76	-751.21	-22.58	6.90	0.83	-
19.23												
48	106	72.01	3.32	-9.71e-05	-1503.46	0.0	373.89	752.36	-22.07	6.61	3.32	-
20.02												
		-20.02	-0.07	-3.32e-05	0.0	24.4	373.89	0.63	-22.07	6.61	1.63	
72.01												
						48.9	373.89	-751.09	-22.07	6.61	-0.07	-
19.72												
48	107	72.52	4.14	-7.33e-05	-1503.46	0.0	253.76	752.24	-22.58	6.90	4.14	-
19.48												
		-19.48	0.83	-2.98e-05	0.0	24.4	253.76	0.52	-22.58	6.90	2.49	
72.52												
						48.9	253.76	-751.21	-22.58	6.90	0.83	-
19.23												
48	111	65.69	2.97	-1.00e-04	-1374.39	0.0	408.00	687.85	-20.98	6.22	2.97	-
18.46												
		-18.46	-0.32	-3.37e-05	0.0	24.4	408.00	0.65	-20.98	6.22	1.33	
65.69												
						48.9	408.00	-686.54	-20.98	6.22	-0.32	-
18.14												
48	112	65.69	2.97	-1.00e-04	-1374.39	0.0	408.00	687.85	-20.98	6.22	2.97	-
18.46												
		-18.46	-0.32	-3.37e-05	0.0	24.4	408.00	0.65	-20.98	6.22	1.33	
65.69												
						48.9	408.00	-686.54	-20.98	6.22	-0.32	-
18.14												
48	113	66.27	3.89	-7.32e-05	-1374.39	0.0	272.86	687.72	-21.56	6.56	3.89	-
17.85												
		-17.85	0.69	-2.98e-05	0.0	24.4	272.86	0.52	-21.56	6.56	2.29	
66.27												
						48.9	272.86	-686.67	-21.56	6.56	0.69	-
17.59												
48	114	65.76	3.07	-9.70e-05	-1374.39	0.0	392.99	687.83	-21.05	6.26	3.07	-
18.39												
		-18.39	-0.21	-3.32e-05	0.0	24.4	392.99	0.64	-21.05	6.26	1.43	
65.76												
						48.9	392.99	-686.56	-21.05	6.26	-0.21	-
18.08												
48	115	66.27	3.89	-7.32e-05	-1374.39	0.0	272.86	687.72	-21.56	6.56	3.89	-
17.85												
		-17.85	0.69	-2.98e-05	0.0	24.4	272.86	0.52	-21.56	6.56	2.29	
66.27												
						48.9	272.86	-686.67	-21.56	6.56	0.69	-
17.59												
48	116	65.76	3.07	-9.70e-05	-1374.39	0.0	392.99	687.83	-21.05	6.26	3.07	-
18.39												
		-18.39	-0.21	-3.32e-05	0.0	24.4	392.99	0.64	-21.05	6.26	1.43	
65.76												
						48.9	392.99	-686.56	-21.05	6.26	-0.21	-
18.08												
49	7	35.20	27.67	7.72e-04	-101.56	0.0	617.77	134.37	-182.07	72.47	27.67	-
6.60												
		-6.60	9.87	-3.82e-05	0.0	25.0	617.77	83.59	-182.07	72.47	18.77	
20.65												
						50.0	617.77	32.81	-182.07	72.47	9.87	
35.20												
49	8	27.44	34.13	9.28e-04	-101.56	0.0	651.70	121.09	-211.36	86.47	34.13	-

Viale Duca Alessandro n. 11 – 43123 Parma
Cell. 335 1403156 – E mail ing.concari@gmail.com
Sito web: studioaire.it – P.IVA 02561480340

7.73													
		-7.73	17.16	-4.39e-05	0.0	25.0	651.70	70.31	-211.36	86.47	25.64		
16.20													
						50.0	651.70	19.53	-211.36	86.47	17.16		
27.44													
49	9	13.87	20.61	5.39e-04	-78.12	0.0	360.34	74.06	-141.28	52.86	20.61	-	
3.69													
		-3.69	5.52	-3.02e-05	0.0	25.0	360.34	35.00	-141.28	52.86	13.06	9.94	
						50.0	360.34	-4.06	-141.28	52.86	5.52		
13.82													
49	11	13.87	20.61	5.39e-04	-78.12	0.0	360.34	74.06	-141.28	52.86	20.61	-	
3.69													
		-3.69	5.52	-3.02e-05	0.0	25.0	360.34	35.00	-141.28	52.86	13.06	9.94	
						50.0	360.34	-4.06	-141.28	52.86	5.52		
13.82													
49	40	56.23	38.67	1.15e-03	-78.12	0.0	318.72	168.96	-263.95	104.26	38.67	-	
8.53													
		-8.53	33.95	-1.35e-04	0.0	25.0	318.72	129.90	-263.95	104.26	36.31		
28.74													
						50.0	318.72	90.83	-263.95	104.26	33.95		
56.23													
49	50	38.34	64.08	2.43e-03	-78.12	0.0	-123.69	112.23	-106.72	72.32	56.64	2.58	
		2.58	56.64	-2.59e-04	0.0	25.0	-123.69	73.17	-106.72	72.32	60.36		
25.34													
						50.0	-123.69	34.11	-106.72	72.32	64.08		
38.34													
49	51	-14.51	2.91	-7.06e-04	-78.12	0.0	1030.85	-50.48	-187.08	53.67	2.91	-	
14.51													
		-58.42	-20.86	1.97e-04	0.0	25.0	1030.85	-89.54	-187.08	53.67	-8.97	-	
31.58													
						50.0	1030.85	-128.60	-187.08	53.67	-20.86	-	
58.42													
49	53	-11.16	3.87	-7.04e-04	-78.12	0.0	948.72	-85.98	-154.80	44.01	3.87	-	
11.16													
		-72.84	-25.72	1.31e-04	0.0	25.0	948.72	-125.04	-154.80	44.01	-10.93	-	
37.12													
						50.0	948.72	-164.11	-154.80	44.01	-25.72	-	
72.84													
49	56	52.76	68.95	2.43e-03	-78.12	0.0	-41.57	147.74	-139.00	81.99	55.68	-	
0.77													
		-0.77	55.68	-1.93e-04	0.0	25.0	-41.57	108.67	-139.00	81.99	62.32		
30.88													
						50.0	-41.57	69.61	-139.00	81.99	68.95		
52.76													
49	71	11.83	17.35	3.80e-04	-78.12	0.0	497.74	77.39	-149.61	53.60	17.35	-	
7.49													
		-7.49	6.41	-2.72e-05	0.0	25.0	497.74	38.33	-149.61	53.60	11.88	7.06	
						50.0	497.74	-0.73	-149.61	53.60	6.41		
11.83													
49	82	22.30	38.41	1.41e-03	-78.12	0.0	158.03	86.99	-134.88	65.65	38.41	-	
1.27													
		-1.27	33.47	-1.33e-04	0.0	25.0	158.03	47.92	-134.88	65.65	35.94		
15.40													
						50.0	158.03	8.86	-134.88	65.65	33.47		
22.30													
49	83	-0.01	9.68	-1.69e-04	-78.12	0.0	598.84	46.97	-178.92	55.00	9.68	-	
7.32													
		-7.32	-14.66	6.61e-05	0.0	25.0	598.84	7.91	-178.92	55.00	-2.49	-	
0.25													
						50.0	598.84	-31.16	-178.92	55.00	-14.66	-	
2.95													
49	85	-1.21	11.67	-1.69e-04	-78.12	0.0	554.07	37.31	-185.43	57.84	11.67	-	
5.86													
		-6.33	-17.21	3.32e-05	0.0	25.0	554.07	-1.75	-185.43	57.84	-2.77	-	
1.21													
						50.0	554.07	-40.82	-185.43	57.84	-17.21	-	
6.33													
49	88	25.68	36.43	1.41e-03	-78.12	0.0	202.81	96.65	-128.38	62.81	36.43	-	
2.73													
		-2.73	36.02	-9.96e-05	0.0	25.0	202.81	57.59	-128.38	62.81	36.22		
16.36													
						50.0	202.81	18.52	-128.38	62.81	36.02		
25.68													
49	89	13.87	20.61	5.39e-04	-78.12	0.0	360.34	74.06	-141.28	52.86	20.61	-	
3.69													
		-3.69	5.52	-3.02e-05	0.0	25.0	360.34	35.00	-141.28	52.86	13.06	9.94	
						50.0	360.34	-4.06	-141.28	52.86	5.52		
13.82													
49	91	13.87	20.61	5.39e-04	-78.12	0.0	360.34	74.06	-141.28	52.86	20.61	-	
3.69													
		-3.69	5.52	-3.02e-05	0.0	25.0	360.34	35.00	-141.28	52.86	13.06	9.94	
						50.0	360.34	-4.06	-141.28	52.86	5.52		
13.82													
49	95	25.31	21.20	5.86e-04	-78.12	0.0	459.90	99.45	-140.22	55.36	21.20	-	
4.89													
		-4.89	7.32	-2.95e-05	0.0	25.0	459.90	60.39	-140.22	55.36	14.26		
15.09													
						50.0	459.90	21.33	-140.22	55.36	7.32		
25.31													
49	96	20.13	25.50	6.90e-04	-78.12	0.0	482.51	90.60	-159.75	64.70	25.50	-	
5.65													
		-5.65	12.18	-3.33e-05	0.0	25.0	482.51	51.54	-159.75	64.70	18.84		
12.13													
						50.0	482.51	12.48	-159.75	64.70	12.18		
20.13													
49	101	13.87	20.61	5.39e-04	-78.12	0.0	360.34	74.06	-141.28	52.86	20.61	-	
3.69													
		-3.69	5.52	-3.02e-05	0.0	25.0	360.34	35.00	-141.28	52.86	13.06	9.94	

Viale Duca Alessandro n. 11 – 43123 Parma
Cell. 335 1403156 – E mail ing.concari@gmail.com
Sito web: studioaire.it – P.IVA 02561480340

						50.0	360.34	-4.06	-141.28	52.86	5.52		13.82
49	107	16.12	20.72	5.49e-04	-78.12	0.0	380.25	79.14	-141.07	53.36	20.72	-3.93	
		-3.93	5.88	-3.00e-05	0.0	25.0	380.25	40.08	-141.07	53.36	13.30		10.97
						50.0	380.25	1.01	-141.07	53.36	5.88		16.12
49	108	12.09	24.17	6.32e-04	-78.12	0.0	398.35	72.06	-156.69	60.83	24.17	-4.53	
		-4.53	9.76	-3.31e-05	0.0	25.0	398.35	32.99	-156.69	60.83	16.96	8.60	
						50.0	398.35	-6.07	-156.69	60.83	9.76		11.97
49	109	13.87	20.61	5.39e-04	-78.12	0.0	360.34	74.06	-141.28	52.86	20.61	-3.69	
		-3.69	5.52	-3.02e-05	0.0	25.0	360.34	35.00	-141.28	52.86	13.06	9.94	
						50.0	360.34	-4.06	-141.28	52.86	5.52		13.82
49	112	9.60	24.48	6.33e-04	-78.12	0.0	380.70	66.09	-158.85	61.26	24.48	-4.37	
		-4.37	9.89	-3.36e-05	0.0	25.0	380.70	27.03	-158.85	61.26	17.18	7.28	
						50.0	380.70	-12.03	-158.85	61.26	9.89	9.16	
49	113	13.87	20.61	5.39e-04	-78.12	0.0	360.34	74.06	-141.28	52.86	20.61	-3.69	
		-3.69	5.52	-3.02e-05	0.0	25.0	360.34	35.00	-141.28	52.86	13.06	9.94	
						50.0	360.34	-4.06	-141.28	52.86	5.52		13.82
49	115	13.87	20.61	5.39e-04	-78.12	0.0	360.34	74.06	-141.28	52.86	20.61	-3.69	
		-3.69	5.52	-3.02e-05	0.0	25.0	360.34	35.00	-141.28	52.86	13.06	9.94	
						50.0	360.34	-4.06	-141.28	52.86	5.52		13.82
49	116	10.06	24.05	6.22e-04	-78.12	0.0	378.44	66.98	-156.90	60.33	24.05	-4.29	
		-4.29	9.40	-3.32e-05	0.0	25.0	378.44	27.92	-156.90	60.33	16.73	7.57	
						50.0	378.44	-11.15	-156.90	60.33	9.40	9.67	
50	5	136.44	13.24	-1.01e-04	-2754.71	0.0	-842.82	1378.02	28.72	-3.67	3.89	-32.06	
		-32.06	3.89	-3.80e-05	0.0	24.4	-842.82	0.66	28.72	-3.67	8.56		136.44
						48.9	-842.82	-1376.69	28.72	-3.67	13.24	-31.74	
50	6	137.25	14.89	-1.47e-04	-2754.71	0.0	-1195.65	1377.62	13.56	0.35	8.46	-31.16	
		-31.16	8.46	-4.47e-05	0.0	24.4	-1195.65	0.26	13.56	0.35	11.67		137.25
						48.9	-1195.65	-1377.09	13.56	0.35	14.89	-31.03	
50	8	137.25	14.89	-1.47e-04	-2754.71	0.0	-1195.65	1377.62	13.56	0.35	8.46	-31.16	
		-31.16	8.46	-4.47e-05	0.0	24.4	-1195.65	0.26	13.56	0.35	11.67		137.25
						48.9	-1195.65	-1377.09	13.56	0.35	14.89	-31.03	
50	9	68.94	8.82	-7.69e-05	-1374.39	0.0	-564.41	687.35	7.67	0.61	4.75	-15.09	
		-15.09	4.75	-2.94e-05	0.0	24.4	-564.41	0.15	7.67	0.61	6.79		68.94
						48.9	-564.41	-687.04	7.67	0.61	8.82	-15.02	
50	13	115.76	10.59	-7.76e-05	-2342.39	0.0	-673.49	1171.81	26.42	-3.85	2.46	-27.53	
		-27.53	2.46	-2.92e-05	0.0	24.4	-673.49	0.62	26.42	-3.85	6.53		115.76
						48.9	-673.49	-1170.58	26.42	-3.85	10.59	-27.23	
50	41	62.98	39.98	-3.46e-04	-1374.39	0.0	1023.52	692.95	-36.71	21.86	39.98	-22.41	
		-22.41	34.40	-2.44e-04	0.0	24.4	1023.52	5.76	-36.71	21.86	37.19		62.98
						48.9	1023.52	-681.44	-36.71	21.86	34.40	-19.62	
50	44	78.20	-8.28	9.94e-05	-1374.39	0.0	-3402.25	680.11	-5.23	-5.02	-11.46	-4.07	
		-7.51	-11.46	1.73e-04	0.0	24.4	-3402.25	-7.09	-5.23	-5.02	-9.87		78.20
						48.9	-3402.25	-694.28	-5.23	-5.02	-8.28	-7.51	
50	73	65.47	17.34	-2.08e-04	-1374.39	0.0	377.84	690.24	0.77	6.35	15.38	-19.25	
		-19.25	15.38	-1.26e-04	0.0	24.4	377.84	3.04	0.77	6.35	16.36		65.47
						48.9	377.84	-684.15	0.77	6.35	17.34	-17.78	
50	76	73.26	2.06	4.90e-06	-1374.39	0.0	-1883.01	684.03	-1.62	-0.85	-1.00	-9.96	
		-11.50	-1.00	5.99e-05	0.0	24.4	-1883.01	-3.16	-1.62	-0.85	0.53		73.26
						48.9	-1883.01	-690.35	-1.62	-0.85	2.06	-11.50	
50	77	65.47	17.37	-2.14e-04	-1374.39	0.0	375.95	690.20	1.22	6.14	15.18	-19.24	
		-19.24	15.18	-7.22e-05	0.0	24.4	375.95	3.00	1.22	6.14	16.28		65.47
						48.9	375.95	-684.19	1.22	6.14	17.37	-17.79	
50	89	68.94	8.82	-7.69e-05	-1374.39	0.0	-564.41	687.35	7.67	0.61	4.75	-15.09	

		-15.09	4.75	-2.94e-05	0.0	24.4	-564.41	0.15	7.67	0.61	6.79	
68.94												
						48.9	-564.41	-687.04	7.67	0.61	8.82	-
15.02												
50	93	100.15	10.00	-7.74e-05	-2019.72	0.0	-637.13	1010.32	20.17	-2.37	3.23	-
23.38												
		-23.38	3.23	-2.93e-05	0.0	24.4	-637.13	0.46	20.17	-2.37	6.61	
100.15												
						48.9	-637.13	-1009.40	20.17	-2.37	10.00	-
23.16												
50	94	100.69	11.10	-1.08e-04	-2019.72	0.0	-872.36	1010.06	10.06	0.31	6.27	-
22.78												
		-22.78	6.27	-3.37e-05	0.0	24.4	-872.36	0.20	10.06	0.31	8.69	
100.69												
						48.9	-872.36	-1009.66	10.06	0.31	11.10	-
22.69												
50	96	100.69	11.10	-1.08e-04	-2019.72	0.0	-872.36	1010.06	10.06	0.31	6.27	-
22.78												
		-22.78	6.27	-3.37e-05	0.0	24.4	-872.36	0.20	10.06	0.31	8.69	
100.69												
						48.9	-872.36	-1009.66	10.06	0.31	11.10	-
22.69												
50	101	68.94	8.82	-7.69e-05	-1374.39	0.0	-564.41	687.35	7.67	0.61	4.75	-
15.09												
		-15.09	4.75	-2.94e-05	0.0	24.4	-564.41	0.15	7.67	0.61	6.79	
68.94												
						48.9	-564.41	-687.04	7.67	0.61	8.82	-
15.02												
50	105	75.18	9.05	-7.70e-05	-1503.46	0.0	-578.95	751.94	10.17	0.01	4.45	-
16.75												
		-16.75	4.45	-2.94e-05	0.0	24.4	-578.95	0.21	10.17	0.01	6.75	
75.18												
						48.9	-578.95	-751.51	10.17	0.01	9.05	-
16.64												
50	106	75.61	9.93	-1.02e-04	-1503.46	0.0	-767.13	751.73	2.08	2.16	6.88	-
16.27												
		-16.27	6.88	-3.29e-05	0.0	24.4	-767.13	2.53e-03	2.08	2.16	8.41	
75.61												
						48.9	-767.13	-751.73	2.08	2.16	9.93	-
16.27												
50	108	75.61	9.93	-1.02e-04	-1503.46	0.0	-767.13	751.73	2.08	2.16	6.88	-
16.27												
		-16.27	6.88	-3.29e-05	0.0	24.4	-767.13	2.53e-03	2.08	2.16	8.41	
75.61												
						48.9	-767.13	-751.73	2.08	2.16	9.93	-
16.27												
50	112	69.42	9.81	-1.05e-04	-1374.39	0.0	-776.11	687.11	-1.43	3.02	7.49	-
14.55												
		-14.59	7.49	-3.34e-05	0.0	24.4	-776.11	-0.09	-1.43	3.02	8.65	
69.42												
						48.9	-776.11	-687.28	-1.43	3.02	9.81	-
14.59												
50	113	68.94	8.82	-7.69e-05	-1374.39	0.0	-564.41	687.35	7.67	0.61	4.75	-
15.09												
		-15.09	4.75	-2.94e-05	0.0	24.4	-564.41	0.15	7.67	0.61	6.79	
68.94												
						48.9	-564.41	-687.04	7.67	0.61	8.82	-
15.02												
50	114	69.37	9.70	-1.01e-04	-1374.39	0.0	-752.59	687.14	-0.42	2.75	7.19	-
14.61												
		-14.64	7.19	-3.29e-05	0.0	24.4	-752.59	-0.06	-0.42	2.75	8.44	
69.37												
						48.9	-752.59	-687.25	-0.42	2.75	9.70	-
14.64												
50	116	69.37	9.70	-1.01e-04	-1374.39	0.0	-752.59	687.14	-0.42	2.75	7.19	-
14.61												
		-14.64	7.19	-3.29e-05	0.0	24.4	-752.59	-0.06	-0.42	2.75	8.44	
69.37												
						48.9	-752.59	-687.25	-0.42	2.75	9.70	-
14.64												
51	1	27.51	0.99	6.95e-04	-101.56	0.0	-725.80	-95.18	-100.05	19.41	0.99	
27.51												
		-45.46	-23.14	-4.20e-05	0.0	25.0	-725.80	-145.96	-100.05	19.41	-11.08	-
2.63												
						50.0	-725.80	-196.75	-100.05	19.41	-23.14	-
45.46												
51	2	33.13	0.24	8.51e-04	-101.56	0.0	-964.72	-153.53	-128.66	26.45	0.24	
33.13												
		-69.01	-30.09	-4.99e-05	0.0	25.0	-964.72	-204.31	-128.66	26.45	-14.92	-
11.59												
						50.0	-964.72	-255.09	-128.66	26.45	-30.09	-
69.01												
51	6	36.87	-1.14	9.20e-04	-101.56	0.0	-1011.67	-129.73	-124.48	20.62	-1.14	
36.87												
		-53.37	-33.73	-5.04e-05	0.0	25.0	-1011.67	-180.51	-124.48	20.62	-17.44	-
1.90												
						50.0	-1011.67	-231.29	-124.48	20.62	-33.73	-
53.37												
51	8	36.87	-1.14	9.20e-04	-101.56	0.0	-1011.67	-129.73	-124.48	20.62	-1.14	
36.87												
		-53.37	-33.73	-5.04e-05	0.0	25.0	-1011.67	-180.51	-124.48	20.62	-17.44	-
1.90												
						50.0	-1011.67	-231.29	-124.48	20.62	-33.73	-
53.37												
51	11	21.16	0.76	5.35e-04	-78.12	0.0	-558.31	-73.22	-76.96	14.93	0.76	
21.16												
		-34.97	-17.80	-3.23e-05	0.0	25.0	-558.31	-112.28	-76.96	14.93	-8.52	-
2.02												

Viale Duca Alessandro n. 11 – 43123 Parma
Cell. 335 1403156 – E mail ing.concari@gmail.com
Sito web: studioaire.it – P.IVA 02561480340

						50.0	-558.31	-151.34	-76.96	14.93	-17.80	-	34.97
51	41	-14.28	14.10	-7.19e-04	-78.12	0.0	427.63	-68.63	-152.53	41.42	14.10	-	14.28
		-72.83	-12.11	-2.20e-04	0.0	25.0	427.63	-107.69	-152.53	41.42	1.00	-	38.67
						50.0	427.63	-146.76	-152.53	41.42	-12.11	-	72.83
51	42	83.42	-11.20	2.42e-03	-78.12	0.0	-2336.36	-289.74	-137.59	24.18	-11.20		83.42
		-85.95	-56.26	-2.24e-05	0.0	25.0	-2336.36	-328.80	-137.59	24.18	-33.73	3.62	
						50.0	-2336.36	-367.86	-137.59	24.18	-56.26	-	85.95
51	44	78.83	-15.22	2.43e-03	-78.12	0.0	-2525.28	-319.62	-123.32	18.49	-15.22		78.83
		-95.78	-52.57	1.38e-04	0.0	25.0	-2525.28	-358.68	-123.32	18.49	-33.89	-	3.59
						50.0	-2525.28	-397.75	-123.32	18.49	-52.57	-	95.78
51	46	82.25	-11.25	2.43e-03	-78.12	0.0	-2455.75	-309.59	-142.57	25.39	-11.25		82.25
		-88.65	-58.33	7.03e-05	0.0	25.0	-2455.75	-348.65	-142.57	25.39	-34.79	1.68	
						50.0	-2455.75	-387.71	-142.57	25.39	-58.33	-	88.65
51	73	0.28	7.15	-1.78e-04	-78.12	0.0	123.44	-9.24	-77.82	18.61	7.15	0.28	
		-25.93	-7.74	-1.16e-04	0.0	25.0	123.44	-48.30	-77.82	18.61	-0.30	-	7.94
						50.0	123.44	-87.36	-77.82	18.61	-7.74	-	25.93
51	74	50.24	-4.73	1.41e-03	-78.13	0.0	-1412.76	-186.03	-112.25	21.14	-4.73		50.24
		-64.50	-36.83	-3.03e-05	0.0	25.0	-1412.76	-225.09	-112.25	21.14	-20.78	-	2.24
						50.0	-1412.76	-264.15	-112.25	21.14	-36.83	-	64.50
51	76	48.03	-6.43	1.41e-03	-78.12	0.0	-1494.91	-199.44	-106.62	18.76	-6.43		48.03
		-69.13	-35.27	4.32e-05	0.0	25.0	-1494.91	-238.50	-106.62	18.76	-20.85	-	5.66
						50.0	-1494.91	-277.56	-106.62	18.76	-35.27	-	69.13
51	78	49.73	-4.75	1.41e-03	-78.12	0.0	-1465.21	-194.87	-114.42	21.66	-4.75		49.73
		-65.67	-37.73	1.03e-05	0.0	25.0	-1465.21	-233.93	-114.42	21.66	-21.24	-	3.09
						50.0	-1465.21	-272.99	-114.42	21.66	-37.73	-	65.67
51	89	21.16	0.76	5.35e-04	-78.12	0.0	-558.31	-73.22	-76.96	14.93	0.76		21.16
		-34.97	-17.80	-3.23e-05	0.0	25.0	-558.31	-112.28	-76.96	14.93	-8.52	-	2.02
						50.0	-558.31	-151.34	-76.96	14.93	-17.80	-	34.97
51	90	24.91	0.26	6.38e-04	-78.12	0.0	-717.59	-112.12	-96.04	19.63	0.26		24.91
		-50.67	-22.43	-3.75e-05	0.0	25.0	-717.59	-151.18	-96.04	19.63	-11.09	-	8.00
						50.0	-717.59	-190.24	-96.04	19.63	-22.43	-	50.67
51	91	21.16	0.76	5.35e-04	-78.12	0.0	-558.31	-73.22	-76.96	14.93	0.76		21.16
		-34.97	-17.80	-3.23e-05	0.0	25.0	-558.31	-112.28	-76.96	14.93	-8.52	-	2.02
						50.0	-558.31	-151.34	-76.96	14.93	-17.80	-	34.97
51	94	27.40	-0.66	6.85e-04	-78.12	0.0	-748.89	-96.25	-93.25	15.74	-0.66		27.40
		-40.24	-24.86	-3.79e-05	0.0	25.0	-748.89	-135.31	-93.25	15.74	-12.76	-	1.54
						50.0	-748.89	-174.37	-93.25	15.74	-24.86	-	40.24
51	96	27.40	-0.66	6.85e-04	-78.12	0.0	-748.89	-96.25	-93.25	15.74	-0.66		27.40
		-40.24	-24.86	-3.79e-05	0.0	25.0	-748.89	-135.31	-93.25	15.74	-12.76	-	1.54
						50.0	-748.89	-174.37	-93.25	15.74	-24.86	-	40.24
51	101	21.16	0.76	5.35e-04	-78.12	0.0	-558.31	-73.22	-76.96	14.93	0.76		21.16
		-34.97	-17.80	-3.23e-05	0.0	25.0	-558.31	-112.28	-76.96	14.93	-8.52	-	2.02
						50.0	-558.31	-151.34	-76.96	14.93	-17.80	-	34.97
51	106	24.66	0.18	6.27e-04	-78.12	0.0	-691.99	-101.16	-91.67	17.91	0.18		24.66
		-45.44	-21.99	-3.66e-05	0.0	25.0	-691.99	-140.23	-91.67	17.91	-10.91	-	5.51
						50.0	-691.99	-179.29	-91.67	17.91	-21.99	-	45.44
51	108	24.66	0.18	6.27e-04	-78.12	0.0	-691.99	-101.16	-91.67	17.91	0.18		24.66
		-45.44	-21.99	-3.66e-05	0.0	25.0	-691.99	-140.23	-91.67	17.91	-10.91	-	5.51
						50.0	-691.99	-179.29	-91.67	17.91	-21.99	-	45.44
51	109	21.16	0.76	5.35e-04	-78.12	0.0	-558.31	-73.22	-76.96	14.93	0.76		21.16
		-34.97	-17.80	-3.23e-05	0.0	25.0	-558.31	-112.28	-76.96	14.93	-8.52	-	

2.02													
							50.0	-558.31	-151.34	-76.96	14.93	-17.80	-
34.97													
	51	111	24.53	0.31	6.28e-04	-78.12	0.0	-701.66	-108.23	-94.13	19.16	0.31	
24.53													
			-49.10	-21.97	-3.70e-05	0.0	25.0	-701.66	-147.29	-94.13	19.16	-10.83	-
7.40													
							50.0	-701.66	-186.35	-94.13	19.16	-21.97	-
49.10													
	51	113	21.16	0.76	5.35e-04	-78.12	0.0	-558.31	-73.22	-76.96	14.93	0.76	
21.16													
			-34.97	-17.80	-3.23e-05	0.0	25.0	-558.31	-112.28	-76.96	14.93	-8.52	-
2.02													
							50.0	-558.31	-151.34	-76.96	14.93	-17.80	-
34.97													
	51	114	24.16	0.36	6.18e-04	-78.12	0.0	-685.73	-104.34	-92.22	18.69	0.36	
24.16													
			-47.53	-21.51	-3.65e-05	0.0	25.0	-685.73	-143.40	-92.22	18.69	-10.57	-
6.80													
							50.0	-685.73	-182.46	-92.22	18.69	-21.51	-
47.53													
	51	115	21.16	0.76	5.35e-04	-78.12	0.0	-558.31	-73.22	-76.96	14.93	0.76	
21.16													
			-34.97	-17.80	-3.23e-05	0.0	25.0	-558.31	-112.28	-76.96	14.93	-8.52	-
2.02													
							50.0	-558.31	-151.34	-76.96	14.93	-17.80	-
34.97													
	51	116	24.16	0.36	6.18e-04	-78.12	0.0	-685.73	-104.34	-92.22	18.69	0.36	
24.16													
			-47.53	-21.51	-3.65e-05	0.0	25.0	-685.73	-143.40	-92.22	18.69	-10.57	-
6.80													
							50.0	-685.73	-182.46	-92.22	18.69	-21.51	-
47.53													
	52	2	85.99	5.48	-1.40e-04	-1786.71	0.0	286.06	895.77	-54.18	13.97	5.48	-
23.79													
			-23.79	-5.03	-4.62e-05	0.0	24.4	286.06	2.42	-54.18	13.97	0.22	
85.99													
							48.9	286.06	-890.93	-54.18	13.97	-5.03	-
22.61													
	52	5	133.79	10.80	-9.63e-05	-2754.71	0.0	32.02	1379.77	-73.87	20.20	10.80	-
35.14													
			-35.14	-2.34	-3.94e-05	0.0	24.4	32.02	2.42	-73.87	20.20	4.23	
133.79													
							48.9	32.02	-1374.93	-73.87	20.20	-2.34	-
33.96													
	52	6	132.99	8.63	-1.41e-04	-2754.71	0.0	151.72	1380.20	-70.84	18.88	8.63	-
36.05													
			-36.05	-4.48	-4.62e-05	0.0	24.4	151.72	2.85	-70.84	18.88	2.08	
132.99													
							48.9	151.72	-1374.50	-70.84	18.88	-4.48	-
34.66													
	52	7	133.79	10.80	-9.63e-05	-2754.71	0.0	32.02	1379.77	-73.87	20.20	10.80	-
35.14													
			-35.14	-2.34	-3.94e-05	0.0	24.4	32.02	2.42	-73.87	20.20	4.23	
133.79													
							48.9	32.02	-1374.93	-73.87	20.20	-2.34	-
33.96													
	52	15	113.76	9.03	-7.42e-05	-2342.39	0.0	-6.37	1173.16	-60.66	16.67	9.03	-
29.86													
			-29.86	-1.67	-3.03e-05	0.0	24.4	-6.37	1.96	-60.66	16.67	3.68	
113.76													
							48.9	-6.37	-1169.23	-60.66	16.67	-1.67	-
28.90													
	52	44	60.48	-11.22	1.11e-04	-1374.39	0.0	1606.53	691.83	-54.58	10.03	-11.22	-
24.66													
			-24.66	-25.66	1.71e-04	0.0	24.4	1606.53	4.64	-54.58	10.03	-18.44	
60.48													
							48.9	1606.53	-682.56	-54.58	10.03	-25.66	-
22.35													
	52	46	59.97	-13.24	-3.41e-04	-1374.39	0.0	1774.18	692.25	-48.88	7.50	-13.24	-
25.22													
			-25.22	-24.17	7.62e-05	0.0	24.4	1774.18	5.06	-48.88	7.50	-18.70	
59.97													
							48.9	1774.18	-682.14	-48.88	7.50	-24.17	-
22.82													
	52	47	70.15	14.93	1.06e-04	-1374.39	0.0	-826.35	686.93	-28.19	11.34	14.93	-
13.81													
			-13.87	9.89	-1.50e-04	0.0	24.4	-826.35	-0.26	-28.19	11.34	12.41	
70.15													
							48.9	-826.35	-687.45	-28.19	11.34	9.89	-
13.87													
	52	76	63.73	-2.53	1.21e-05	-1374.39	0.0	854.07	690.21	-48.06	10.70	-2.53	-
21.01													
			-21.01	-13.39	5.87e-05	0.0	24.4	854.07	3.02	-48.06	10.70	-7.96	
63.73													
							48.9	854.07	-684.18	-48.06	10.70	-13.39	-
19.51													
	52	78	63.52	-3.21	-2.04e-04	-1374.39	0.0	891.07	690.41	-45.26	9.44	-3.21	-
21.24													
			-21.24	-12.54	1.43e-05	0.0	24.4	891.07	3.21	-45.26	9.44	-7.87	
63.52													
							48.9	891.07	-683.98	-45.26	9.44	-12.54	-
19.71													
	52	79	69.15	12.66	9.31e-06	-1374.39	0.0	-507.46	687.50	-39.52	12.68	12.66	-
14.93													
			-14.93	5.80	-8.21e-05	0.0	24.4	-507.46	0.31	-39.52	12.68	9.23	
69.15													
							48.9	-507.46	-686.89	-39.52	12.68	5.80	-

Viale Duca Alessandro n. 11 – 43123 Parma
Cell. 335 1403156 – E mail ing.concari@gmail.com
Sito web: studioaire.it – P.IVA 02561480340

14.75													
	52	90	66.23	4.44	-1.03e-04	-1374.39	0.0	207.77	689.01	-41.99	10.88	4.44	-
18.21													
			-18.21	-3.65	-3.48e-05	0.0	24.4	207.77	1.82	-41.99	10.88	0.39	
66.23													
							48.9	207.77	-685.38	-41.99	10.88	-3.65	-
17.32													
	52	93	98.10	7.98	-7.40e-05	-2019.72	0.0	38.41	1011.68	-55.11	15.04	7.98	-
25.77													
			-25.77	-1.86	-3.03e-05	0.0	24.4	38.41	1.82	-55.11	15.04	3.06	
98.10													
							48.9	38.41	-1008.04	-55.11	15.04	-1.86	-
24.89													
	52	94	97.56	6.54	-1.04e-04	-2019.72	0.0	118.21	1011.97	-53.09	14.15	6.54	-
26.38													
			-26.38	-3.28	-3.48e-05	0.0	24.4	118.21	2.11	-53.09	14.15	1.63	
97.56													
							48.9	118.21	-1007.76	-53.09	14.15	-3.28	-
25.35													
	52	95	98.10	7.98	-7.40e-05	-2019.72	0.0	38.41	1011.68	-55.11	15.04	7.98	-
25.77													
			-25.77	-1.86	-3.03e-05	0.0	24.4	38.41	1.82	-55.11	15.04	3.06	
98.10													
							48.9	38.41	-1008.04	-55.11	15.04	-1.86	-
24.89													
	52	105	73.03	6.30	-7.37e-05	-1503.46	0.0	110.06	753.31	-46.23	12.42	6.30	-
19.23													
			-19.23	-2.16	-3.03e-05	0.0	24.4	110.06	1.59	-46.23	12.42	2.07	
73.03													
							48.9	110.06	-750.14	-46.23	12.42	-2.16	-
18.46													
	52	106	72.60	5.15	-9.76e-05	-1503.46	0.0	173.90	753.54	-44.61	11.71	5.15	-
19.72													
			-19.72	-3.29	-3.39e-05	0.0	24.4	173.90	1.82	-44.61	11.71	0.93	
72.60													
							48.9	173.90	-749.91	-44.61	11.71	-3.29	-
18.83													
	52	107	73.03	6.30	-7.37e-05	-1503.46	0.0	110.06	753.31	-46.23	12.42	6.30	-
19.23													
			-19.23	-2.16	-3.03e-05	0.0	24.4	110.06	1.59	-46.23	12.42	2.07	
73.03													
							48.9	110.06	-750.14	-46.23	12.42	-2.16	-
18.46													
	52	111	66.28	4.58	-1.00e-04	-1374.39	0.0	199.79	688.98	-42.19	10.97	4.58	-
18.14													
			-18.14	-3.51	-3.43e-05	0.0	24.4	199.79	1.79	-42.19	10.97	0.54	
66.28													
							48.9	199.79	-685.41	-42.19	10.97	-3.51	-
17.27													
	52	113	66.77	5.88	-7.36e-05	-1374.39	0.0	127.97	688.72	-44.00	11.77	5.88	-
17.60													
			-17.60	-2.23	-3.03e-05	0.0	24.4	127.97	1.53	-44.00	11.77	1.83	
66.77													
							48.9	127.97	-685.67	-44.00	11.77	-2.23	-
16.85													
	52	114	66.34	4.73	-9.75e-05	-1374.39	0.0	191.81	688.95	-42.39	11.06	4.73	-
18.08													
			-18.08	-3.37	-3.39e-05	0.0	24.4	191.81	1.76	-42.39	11.06	0.68	
66.34													
							48.9	191.81	-685.44	-42.39	11.06	-3.37	-
17.23													
	52	115	66.77	5.88	-7.36e-05	-1374.39	0.0	127.97	688.72	-44.00	11.77	5.88	-
17.60													
			-17.60	-2.23	-3.03e-05	0.0	24.4	127.97	1.53	-44.00	11.77	1.83	
66.77													
							48.9	127.97	-685.67	-44.00	11.77	-2.23	-
16.85													
	53	4	90.46	16.69	-1.46e-04	-1786.71	0.0	-1098.77	893.74	-51.68	9.63	16.69	-
18.82													
			-18.82	2.09	-4.58e-05	0.0	24.4	-1098.77	0.39	-51.68	9.63	9.39	
90.46													
							48.9	-1098.77	-892.96	-51.68	9.63	2.09	-
18.63													
	53	5	136.95	11.36	-1.00e-04	-2754.71	0.0	-1001.59	1378.80	-23.63	-1.86	11.36	-
31.74													
			-31.74	-2.26	-3.81e-05	0.0	24.4	-1001.59	1.44	-23.63	-1.86	4.55	
136.95													
							48.9	-1001.59	-1375.91	-23.63	-1.86	-2.26	-
31.04													
	53	7	136.95	11.36	-1.00e-04	-2754.71	0.0	-1001.59	1378.80	-23.63	-1.86	11.36	-
31.74													
			-31.74	-2.26	-3.81e-05	0.0	24.4	-1001.59	1.44	-23.63	-1.86	4.55	
136.95													
							48.9	-1001.59	-1375.91	-23.63	-1.86	-2.26	-
31.04													
	53	8	137.56	15.60	-1.46e-04	-2754.71	0.0	-1313.79	1378.39	-39.79	3.74	15.60	-
31.04													
			-31.04	0.27	-4.54e-05	0.0	24.4	-1313.79	1.04	-39.79	3.74	7.93	
137.56													
							48.9	-1313.79	-1376.31	-39.79	3.74	0.27	-
30.53													
	53	9	69.12	9.58	-7.66e-05	-1374.39	0.0	-605.05	687.80	-27.32	3.10	9.58	-
15.02													
			-15.02	-0.34	-2.96e-05	0.0	24.4	-605.05	0.61	-27.32	3.10	4.62	
69.12													
							48.9	-605.05	-686.58	-27.32	3.10	-0.34	-
14.72													
	53	41	65.38	52.25	-3.48e-04	-1374.39	0.0	246.01	691.58	-140.97	37.40	52.25	-

19.63													
			-19.63	9.03	-2.42e-04	0.0	24.4	246.01	4.39	-140.97	37.40	30.64	
65.38							48.9	246.01	-682.81	-140.97	37.40	9.03	-
17.59													
	53	44	75.34	1.33	1.03e-04	-1374.39	0.0	-2499.98	682.33	19.20	-8.51	-14.34	-
7.51													
			-9.79	-14.34	1.68e-04	0.0	24.4	-2499.98	-4.86	19.20	-8.51	-6.51	
75.34													
							48.9	-2499.98	-692.06	19.20	-8.51	1.33	-
9.79													
	53	45	65.36	51.95	-3.63e-04	-1374.39	0.0	236.42	691.45	-140.23	36.85	51.95	-
19.64													
			-19.64	9.10	-1.19e-04	0.0	24.4	236.42	4.25	-140.23	36.85	30.52	
65.36													
							48.9	236.42	-682.94	-140.23	36.85	9.10	-
17.62													
	53	49	65.23	51.37	-3.40e-04	-1374.39	0.0	296.00	690.94	-140.75	36.71	51.37	-
19.62													
			-19.62	9.34	5.85e-06	0.0	24.4	296.00	3.75	-140.75	36.71	30.36	
65.23													
							48.9	296.00	-683.45	-140.75	36.71	9.34	-
17.89													
	53	52	75.49	1.02	9.47e-05	-1374.39	0.0	-2549.97	682.97	18.99	-7.82	-13.47	-
7.52													
			-9.49	-13.47	-8.02e-05	0.0	24.4	-2549.97	-4.22	18.99	-7.82	-6.23	
75.49													
							48.9	-2549.97	-691.42	18.99	-7.82	1.02	-
9.49													
	53	56	75.51	0.95	1.09e-04	-1374.39	0.0	-2540.37	683.11	18.25	-7.28	-13.17	-
7.51													
			-9.46	-13.17	-2.03e-04	0.0	24.4	-2540.37	-4.09	18.25	-7.28	-6.11	
75.51													
							48.9	-2540.37	-691.28	18.25	-7.28	0.95	-
9.46													
	53	62	69.80	11.00	-4.54e-04	-1374.39	0.0	-937.53	687.65	-37.96	6.19	11.00	-
14.23													
			-14.23	-1.10	-2.16e-04	0.0	24.4	-937.53	0.46	-37.96	6.19	4.95	
69.80													
							48.9	-937.53	-686.74	-37.96	6.19	-1.10	-
14.16													
	53	73	66.84	23.15	-2.09e-04	-1374.39	0.0	-54.76	689.92	-60.16	12.59	23.15	-
17.79													
			-17.79	0.78	-1.25e-04	0.0	24.4	-54.76	2.72	-60.16	12.59	11.97	
66.84													
							48.9	-54.76	-684.47	-60.16	12.59	0.78	-
16.51													
	53	77	66.83	23.02	-2.15e-04	-1374.39	0.0	-58.84	689.86	-59.84	12.35	23.02	-
17.79													
			-17.79	0.81	-7.08e-05	0.0	24.4	-58.84	2.66	-59.84	12.35	11.91	
66.83													
							48.9	-58.84	-684.53	-59.84	12.35	0.81	-
16.52													
	53	81	66.78	22.77	-2.05e-04	-1374.39	0.0	-33.03	689.64	-60.06	12.29	22.77	-
17.79													
			-17.79	0.91	-1.60e-05	0.0	24.4	-33.03	2.44	-60.06	12.29	11.84	
66.78													
							48.9	-33.03	-684.75	-60.06	12.29	0.91	-
16.64													
	53	84	72.11	1.11	3.11e-06	-1374.39	0.0	-1510.09	685.54	-11.82	-0.12	0.91	-
11.50													
			-12.26	0.91	-5.11e-05	0.0	24.4	-1510.09	-1.65	-11.82	-0.12	1.01	
72.11													
							48.9	-1510.09	-688.85	-11.82	-0.12	1.11	-
12.26													
	53	88	72.12	1.09	9.46e-06	-1374.39	0.0	-1506.01	685.60	-12.14	0.12	1.04	-
11.49													
			-12.25	1.04	-1.05e-04	0.0	24.4	-1506.01	-1.59	-12.14	0.12	1.06	
72.12													
							48.9	-1506.01	-688.79	-12.14	0.12	1.09	-
12.25													
	53	89	69.12	9.58	-7.66e-05	-1374.39	0.0	-605.05	687.80	-27.32	3.10	9.58	-
15.02													
			-15.02	-0.34	-2.96e-05	0.0	24.4	-605.05	0.61	-27.32	3.10	4.62	
69.12													
							48.9	-605.05	-686.58	-27.32	3.10	-0.34	-
14.72													
	53	92	69.52	12.40	-1.07e-04	-1374.39	0.0	-813.18	687.54	-38.09	6.83	12.40	-
14.55													
			-14.55	1.35	-3.45e-05	0.0	24.4	-813.18	0.34	-38.09	6.83	6.88	
69.52													
							48.9	-813.18	-686.85	-38.09	6.83	1.35	-
14.38													
	53	93	100.52	8.85	-7.70e-05	-2019.72	0.0	-748.40	1010.90	-19.39	-0.83	8.85	-
23.16													
			-23.16	-1.55	-2.94e-05	0.0	24.4	-748.40	1.04	-19.39	-0.83	3.65	
100.52													
							48.9	-748.40	-1008.82	-19.39	-0.83	-1.55	-
22.65													
	53	95	100.52	8.85	-7.70e-05	-2019.72	0.0	-748.40	1010.90	-19.39	-0.83	8.85	-
23.16													
			-23.16	-1.55	-2.94e-05	0.0	24.4	-748.40	1.04	-19.39	-0.83	3.65	
100.52													
							48.9	-748.40	-1008.82	-19.39	-0.83	-1.55	-
22.65													
	53	96	100.92	11.68	-1.08e-04	-2019.72	0.0	-956.53	1010.64	-30.17	2.91	11.68	-
22.69													
			-22.69	0.13	-3.42e-05	0.0	24.4	-956.53	0.78	-30.17	2.91	5.90	

Viale Duca Alessandro n. 11 – 43123 Parma
Cell. 335 1403156 – E mail ing.concari@gmail.com
Sito web: studioaire.it – P.IVA 02561480340

100.92														
							48.9	-956.53	-1009.09	-30.17	2.91	0.13	-	
22.32														
	53	101	69.12	9.58	-7.66e-05	-1374.39	0.0	-605.05	687.80	-27.32	3.10	9.58	-	
15.02														
			-15.02	-0.34	-2.96e-05	0.0	24.4	-605.05	0.61	-27.32	3.10	4.62		
69.12														
							48.9	-605.05	-686.58	-27.32	3.10	-0.34	-	
14.72														
	53	105	75.40	9.44	-7.67e-05	-1503.46	0.0	-633.72	752.42	-25.73	2.31	9.44	-	
16.65														
			-16.65	-0.58	-2.96e-05	0.0	24.4	-633.72	0.70	-25.73	2.31	4.43		
75.40														
							48.9	-633.72	-751.03	-25.73	2.31	-0.58	-	
16.31														
	53	107	75.40	9.44	-7.67e-05	-1503.46	0.0	-633.72	752.42	-25.73	2.31	9.44	-	
16.65														
			-16.65	-0.58	-2.96e-05	0.0	24.4	-633.72	0.70	-25.73	2.31	4.43		
75.40														
							48.9	-633.72	-751.03	-25.73	2.31	-0.58	-	
16.31														
	53	108	75.72	11.69	-1.01e-04	-1503.46	0.0	-800.23	752.21	-34.35	5.30	11.69	-	
16.27														
			-16.27	0.77	-3.35e-05	0.0	24.4	-800.23	0.48	-34.35	5.30	6.23		
75.72														
							48.9	-800.23	-751.25	-34.35	5.30	0.77	-	
16.04														
	53	112	69.48	12.12	-1.04e-04	-1374.39	0.0	-792.37	687.56	-37.02	6.46	12.12	-	
14.60														
			-14.60	1.18	-3.40e-05	0.0	24.4	-792.37	0.37	-37.02	6.46	6.65		
69.48														
							48.9	-792.37	-686.83	-37.02	6.46	1.18	-	
14.42														
	53	113	69.12	9.58	-7.66e-05	-1374.39	0.0	-605.05	687.80	-27.32	3.10	9.58	-	
15.02														
			-15.02	-0.34	-2.96e-05	0.0	24.4	-605.05	0.61	-27.32	3.10	4.62		
69.12														
							48.9	-605.05	-686.58	-27.32	3.10	-0.34	-	
14.72														
	53	115	69.12	9.58	-7.66e-05	-1374.39	0.0	-605.05	687.80	-27.32	3.10	9.58	-	
15.02														
			-15.02	-0.34	-2.96e-05	0.0	24.4	-605.05	0.61	-27.32	3.10	4.62		
69.12														
							48.9	-605.05	-686.58	-27.32	3.10	-0.34	-	
14.72														
	53	116	69.44	11.84	-1.01e-04	-1374.39	0.0	-771.56	687.59	-35.94	6.08	11.84	-	
14.64														
			-14.64	1.01	-3.35e-05	0.0	24.4	-771.56	0.40	-35.94	6.08	6.43		
69.44														
							48.9	-771.56	-686.80	-35.94	6.08	1.01	-	
14.45														
	54	6	134.46	11.46	-1.41e-04	-2754.71	0.0	-145.94	1380.56	-53.14	26.63	7.96	-	
34.67														
			-34.67	7.96	-4.72e-05	0.0	24.4	-145.94	3.21	-53.14	26.63	9.71		
134.46														
							48.9	-145.94	-1374.14	-53.14	26.63	11.46	-	
33.10														
	54	7	135.12	11.17	-9.62e-05	-2754.71	0.0	-233.80	1380.37	-67.86	29.02	11.17	-	
33.96														
			-33.96	10.23	-3.99e-05	0.0	24.4	-233.80	3.01	-67.86	29.02	10.70		
135.12														
							48.9	-233.80	-1374.34	-67.86	29.02	10.23	-	
32.49														
	54	8	134.46	11.46	-1.41e-04	-2754.71	0.0	-145.94	1380.56	-53.14	26.63	7.96	-	
34.67														
			-34.67	7.96	-4.72e-05	0.0	24.4	-145.94	3.21	-53.14	26.63	9.71		
134.46														
							48.9	-145.94	-1374.14	-53.14	26.63	11.46	-	
33.10														
	54	10	66.94	7.05	-1.19e-04	-1374.39	0.0	83.13	689.28	-22.60	14.26	2.37	-	
17.56														
			-17.56	2.37	-3.80e-05	0.0	24.4	83.13	2.08	-22.60	14.26	4.71		
66.94														
							48.9	83.13	-685.11	-22.60	14.26	7.05	-	
16.54														
	54	12	66.94	7.05	-1.19e-04	-1374.39	0.0	83.13	689.28	-22.60	14.26	2.37	-	
17.56														
			-17.56	2.37	-3.80e-05	0.0	24.4	83.13	2.08	-22.60	14.26	4.71		
66.94														
							48.9	83.13	-685.11	-22.60	14.26	7.05	-	
16.54														
	54	41	70.29	22.71	-3.47e-04	-1374.39	0.0	-1035.34	690.36	-9.37	15.86	18.08	-	
14.34														
			-14.34	18.08	-2.42e-04	0.0	24.4	-1035.34	3.16	-9.37	15.86	20.39		
70.29														
							48.9	-1035.34	-684.03	-9.37	15.86	22.71	-	
13.06														
	54	44	62.11	-7.07	1.11e-04	-1374.39	0.0	1624.52	688.61	-6.28	7.93	-20.83	-	
22.36														
			-22.36	-20.83	1.65e-04	0.0	24.4	1624.52	1.42	-6.28	7.93	-13.95		
62.11														
							48.9	1624.52	-685.77	-6.28	7.93	-7.07	-	
21.40														
	54	46	61.63	-2.93	-3.44e-04	-1374.39	0.0	1718.84	689.12	0.27	8.03	-19.75	-	
22.83														
			-22.83	-19.75	7.12e-05	0.0	24.4	1718.84	1.93	0.27	8.03	-11.34		
61.63														
							48.9	1718.84	-685.27	0.27	8.03	-2.93	-	

Viale Duca Alessandro n. 11 – 43123 Parma
Cell. 335 1403156 – E mail ing.concari@gmail.com
Sito web: studioaire.it – P.IVA 02561480340

21.90													
	54	50	61.51	1.40	-3.38e-04	-1374.39	0.0	1821.88	688.72	2.03	10.08	-16.33	-
22.80													
			-22.80	-16.33	-2.99e-04	0.0	24.4	1821.88	1.52	2.03	10.08	-7.47	
61.51													
							48.9	1821.88	-685.67	2.03	10.08	1.40	-
22.16													
	54	51	70.89	14.23	1.03e-04	-1374.39	0.0	-1232.70	690.25	-17.67	13.70	13.58	-
13.90													
			-13.90	13.58	2.23e-04	0.0	24.4	-1232.70	3.06	-17.67	13.70	13.91	
70.89													
							48.9	-1232.70	-684.14	-17.67	13.70	14.23	-
12.30													
	54	55	70.89	14.43	1.17e-04	-1374.39	0.0	-1163.76	690.15	-18.73	14.90	14.35	-
13.89													
			-13.89	14.35	1.00e-04	0.0	24.4	-1163.76	2.95	-18.73	14.90	14.39	
70.89													
							48.9	-1163.76	-684.24	-18.73	14.90	14.43	-
12.30													
	54	73	69.54	14.90	-2.08e-04	-1374.39	0.0	-701.83	689.45	-39.45	18.65	14.90	-
14.94													
			-14.94	12.64	-1.25e-04	0.0	24.4	-701.83	2.25	-39.45	18.65	13.77	
69.54													
							48.9	-701.83	-684.94	-39.45	18.65	12.64	-
13.96													
	54	76	64.96	0.31	1.24e-05	-1374.39	0.0	786.09	688.93	-19.49	12.10	-7.17	-
19.51													
			-19.51	-7.17	5.58e-05	0.0	24.4	786.09	1.73	-19.49	12.10	-3.43	
64.96													
							48.9	786.09	-685.46	-19.49	12.10	0.31	-
18.55													
	54	78	64.75	2.33	-2.06e-04	-1374.39	0.0	783.11	689.15	-16.29	12.08	-6.57	-
19.71													
			-19.71	-6.57	1.17e-05	0.0	24.4	783.11	1.95	-16.29	12.08	-2.12	
64.75													
							48.9	783.11	-685.24	-16.29	12.08	2.33	-
18.77													
	54	85	69.59	13.42	-2.10e-04	-1374.39	0.0	-747.69	689.62	-40.22	17.75	13.42	-
14.96													
			-14.96	10.75	3.72e-05	0.0	24.4	-747.69	2.42	-40.22	17.75	12.08	
69.59													
							48.9	-747.69	-684.77	-40.22	17.75	10.75	-
13.85													
	54	87	69.79	13.15	1.39e-05	-1374.39	0.0	-713.56	689.35	-43.88	18.30	13.15	-
14.76													
			-14.76	8.81	2.75e-05	0.0	24.4	-713.56	2.15	-43.88	18.30	10.98	
69.79													
							48.9	-713.56	-685.04	-43.88	18.30	8.81	-
13.64													
	54	88	64.91	2.20	1.48e-05	-1374.39	0.0	831.95	688.76	-18.72	13.00	-5.68	-
19.50													
			-19.50	-5.68	-1.06e-04	0.0	24.4	831.95	1.56	-18.72	13.00	-1.74	
64.91													
							48.9	831.95	-685.63	-18.72	13.00	2.20	-
18.66													
	54	90	67.16	6.64	-1.04e-04	-1374.39	0.0	53.84	689.21	-27.51	15.06	3.44	-
17.32													
			-17.32	3.44	-3.56e-05	0.0	24.4	53.84	2.02	-27.51	15.06	5.04	
67.16													
							48.9	53.84	-685.18	-27.51	15.06	6.64	-
16.34													
	54	92	67.16	6.64	-1.04e-04	-1374.39	0.0	53.84	689.21	-27.51	15.06	3.44	-
17.32													
			-17.32	3.44	-3.56e-05	0.0	24.4	53.84	2.02	-27.51	15.06	5.04	
67.16													
							48.9	53.84	-685.18	-27.51	15.06	6.64	-
16.34													
	54	94	98.65	8.41	-1.04e-04	-2019.72	0.0	-97.93	1012.25	-40.40	19.97	6.05	-
25.36													
			-25.36	6.05	-3.55e-05	0.0	24.4	-97.93	2.39	-40.40	19.97	7.23	
98.65													
							48.9	-97.93	-1007.47	-40.40	19.97	8.41	-
24.19													
	54	95	99.09	8.19	-7.40e-05	-2019.72	0.0	-156.49	1012.12	-50.22	21.57	8.19	-
24.89													
			-24.89	7.59	-3.07e-05	0.0	24.4	-156.49	2.26	-50.22	21.57	7.89	
99.09													
							48.9	-156.49	-1007.60	-50.22	21.57	7.59	-
23.78													
	54	96	98.65	8.41	-1.04e-04	-2019.72	0.0	-97.93	1012.25	-40.40	19.97	6.05	-
25.36													
			-25.36	6.05	-3.55e-05	0.0	24.4	-97.93	2.39	-40.40	19.97	7.23	
98.65													
							48.9	-97.93	-1007.47	-40.40	19.97	8.41	-
24.19													
	54	106	73.55	6.83	-9.78e-05	-1503.46	0.0	11.78	753.79	-32.05	16.36	4.39	-
18.84													
			-18.84	4.39	-3.46e-05	0.0	24.4	11.78	2.07	-32.05	16.36	5.61	
73.55													
							48.9	11.78	-749.66	-32.05	16.36	6.83	-
17.83													
	54	107	73.90	6.17	-7.38e-05	-1503.46	0.0	-35.08	753.69	-39.90	17.63	6.10	-
18.46													
			-18.46	6.10	-3.07e-05	0.0	24.4	-35.08	1.96	-39.90	17.63	6.14	
73.90													
							48.9	-35.08	-749.76	-39.90	17.63	6.17	-
17.50													
	54	108	73.55	6.83	-9.78e-05	-1503.46	0.0	11.78	753.79	-32.05	16.36	4.39	-

Viale Duca Alessandro n. 11 – 43123 Parma
Cell. 335 1403156 – E mail ing.concari@gmail.com
Sito web: studioaire.it – P.IVA 02561480340

18.84			-18.84	4.39	-3.46e-05	0.0	24.4	11.78	2.07	-32.05	16.36	5.61		
73.55							48.9	11.78	-749.66	-32.05	16.36	6.83	-	
17.83	54	111	67.20	6.56	-1.01e-04	-1374.39	0.0	47.99	689.20	-28.49	15.22	3.65	-	
17.28			-17.28	3.65	-3.51e-05	0.0	24.4	47.99	2.00	-28.49	15.22	5.10		
67.20							48.9	47.99	-685.19	-28.49	15.22	6.56	-	
16.30	54	112	67.20	6.56	-1.01e-04	-1374.39	0.0	47.99	689.20	-28.49	15.22	3.65	-	
17.28			-17.28	3.65	-3.51e-05	0.0	24.4	47.99	2.00	-28.49	15.22	5.10		
67.20							48.9	47.99	-685.19	-28.49	15.22	6.56	-	
16.30	54	114	67.25	6.47	-9.77e-05	-1374.39	0.0	42.13	689.19	-29.47	15.38	3.87	-	
17.23			-17.23	3.87	-3.46e-05	0.0	24.4	42.13	1.99	-29.47	15.38	5.17		
67.25							48.9	42.13	-685.20	-29.47	15.38	6.47	-	
16.26	54	115	67.60	5.82	-7.37e-05	-1374.39	0.0	-4.72	689.08	-37.32	16.65	5.58	-	
16.85			-16.85	5.58	-3.07e-05	0.0	24.4	-4.72	1.89	-37.32	16.65	5.70		
67.60							48.9	-4.72	-685.31	-37.32	16.65	5.82	-	
15.93	54	116	67.25	6.47	-9.77e-05	-1374.39	0.0	42.13	689.19	-29.47	15.38	3.87	-	
17.23			-17.23	3.87	-3.46e-05	0.0	24.4	42.13	1.99	-29.47	15.38	5.17		
67.25							48.9	42.13	-685.20	-29.47	15.38	6.47	-	
16.26	55	4	90.44	8.71	-1.45e-04	-1786.71	0.0	-962.66	892.91	-62.00	15.22	8.71	-	
18.64			-18.86	-4.81	-4.85e-05	0.0	24.4	-962.66	-0.44	-62.00	15.22	1.95		
90.44							48.9	-962.66	-893.80	-62.00	15.22	-4.81	-	
18.86	55	5	137.48	-3.36	-9.94e-05	-2754.71	0.0	-913.31	1378.09	-2.84	-1.53	-3.36	-	
31.04			-31.04	-6.84	-4.08e-05	0.0	24.4	-913.31	0.73	-2.84	-1.53	-5.10		
137.48							48.9	-913.31	-1376.62	-2.84	-1.53	-6.84	-	
30.69	55	7	137.48	-3.36	-9.94e-05	-2754.71	0.0	-913.31	1378.09	-2.84	-1.53	-3.36	-	
31.04			-31.04	-6.84	-4.08e-05	0.0	24.4	-913.31	0.73	-2.84	-1.53	-5.10		
137.48							48.9	-913.31	-1376.62	-2.84	-1.53	-6.84	-	
30.69	55	8	137.81	2.94	-1.45e-04	-2754.71	0.0	-1171.64	1377.39	-33.56	6.76	2.94	-	
30.54			-30.54	-6.27	-4.85e-05	0.0	24.4	-1171.64	0.03	-33.56	6.76	-1.66		
137.81							48.9	-1171.64	-1377.32	-33.56	6.76	-6.27	-	
30.52	55	9	69.31	1.86	-7.62e-05	-1374.39	0.0	-541.79	687.39	-24.06	5.33	1.86	-	
14.72			-14.72	-4.15	-3.14e-05	0.0	24.4	-541.79	0.20	-24.06	5.33	-1.14		
69.31							48.9	-541.79	-687.00	-24.06	5.33	-4.15	-	
14.63	55	38	69.74	-3.74	-9.54e-04	-1374.39	0.0	-1019.88	685.66	-29.92	2.47	-3.74	-	
13.88			-14.62	-8.65	-4.46e-05	0.0	24.4	-1019.88	-1.53	-29.92	2.47	-6.20		
69.74							48.9	-1019.88	-688.73	-29.92	2.47	-8.65	-	
14.62	55	47	66.73	38.62	1.07e-04	-1374.39	0.0	76.12	686.61	-157.42	52.13	38.62	-	
17.11			-17.42	1.38	-1.49e-04	0.0	24.4	76.12	-0.58	-157.42	52.13	20.00		
66.73							48.9	76.12	-687.78	-157.42	52.13	1.38	-	
17.42	55	49	65.86	34.36	-3.41e-04	-1374.39	0.0	244.40	686.26	-155.72	50.58	34.36	-	
17.90			-18.37	-0.71	3.85e-06	0.0	24.4	244.40	-0.93	-155.72	50.58	16.82		
65.86							48.9	244.40	-688.13	-155.72	50.58	-0.71	-	
18.37	55	52	74.18	-4.22	9.66e-05	-1374.39	0.0	-2213.26	685.88	-18.03	-5.82	-4.22	-	
9.49			-10.12	-4.35	-8.31e-05	0.0	24.4	-2213.26	-1.31	-18.03	-5.82	-4.29		
74.18							48.9	-2213.26	-688.51	-18.03	-5.82	-4.35	-	
10.12	55	53	65.81	33.91	-3.55e-04	-1374.39	0.0	242.70	686.21	-155.42	50.31	33.91	-	
17.93			-18.43	-0.76	1.27e-04	0.0	24.4	242.70	-0.99	-155.42	50.31	16.58		
65.81							48.9	242.70	-688.18	-155.42	50.31	-0.76	-	
18.43	55	56	74.23	-3.78	1.11e-04	-1374.39	0.0	-2211.55	685.93	-18.33	-5.55	-3.78	-	
9.46			-10.06	-4.30	-2.06e-04	0.0	24.4	-2211.55	-1.26	-18.33	-5.55	-4.04		

Viale Duca Alessandro n. 11 – 43123 Parma
Cell. 335 1403156 – E mail ing.concari@gmail.com
Sito web: studioaire.it – P.IVA 02561480340

74.23														
							48.9	-2211.55	-688.45	-18.33	-5.55	-4.30	-	
10.06														
	55	70	69.59	1.28	-4.75e-04	-1374.39	0.0	-827.80	686.42	-35.79	6.54	1.28	-	
14.21														
			-14.58	-5.95	-3.95e-05	0.0	24.4	-827.80	-0.78	-35.79	6.54	-2.34		
69.59														
							48.9	-827.80	-687.97	-35.79	6.54	-5.95	-	
14.58														
	55	79	67.80	11.25	9.20e-06	-1374.39	0.0	-77.62	687.67	-51.06	17.29	11.25	-	
16.30														
			-16.30	-2.67	-8.17e-05	0.0	24.4	-77.62	0.48	-51.06	17.29	4.29		
67.80														
							48.9	-77.62	-686.71	-51.06	17.29	-2.67	-	
16.08														
	55	81	67.41	9.29	-2.06e-04	-1374.39	0.0	-36.65	687.47	-50.50	16.62	9.29	-	
16.65														
			-16.65	-3.76	-1.75e-05	0.0	24.4	-36.65	0.28	-50.50	16.62	2.77		
67.41														
							48.9	-36.65	-686.92	-50.50	16.62	-3.76	-	
16.52														
	55	84	71.57	1.14	4.23e-06	-1374.39	0.0	-1322.49	686.57	-30.39	2.89	1.14	-	
12.27														
			-12.57	-3.92	-5.34e-05	0.0	24.4	-1322.49	-0.63	-30.39	2.89	-1.39		
71.57														
							48.9	-1322.49	-687.82	-30.39	2.89	-3.92	-	
12.57														
	55	85	67.39	9.10	-2.12e-04	-1374.39	0.0	-37.33	687.45	-50.37	16.50	9.10	-	
16.66														
			-16.66	-3.78	3.63e-05	0.0	24.4	-37.33	0.25	-50.37	16.50	2.66		
67.39														
							48.9	-37.33	-686.94	-50.37	16.50	-3.78	-	
16.54														
	55	88	71.59	1.33	1.06e-05	-1374.39	0.0	-1321.81	686.59	-30.52	3.00	1.33	-	
12.25														
			-12.54	-3.89	-1.07e-04	0.0	24.4	-1321.81	-0.61	-30.52	3.00	-1.28		
71.59														
							48.9	-1321.81	-687.80	-30.52	3.00	-3.89	-	
12.54														
	55	89	69.31	1.86	-7.62e-05	-1374.39	0.0	-541.79	687.39	-24.06	5.33	1.86	-	
14.72														
			-14.72	-4.15	-3.14e-05	0.0	24.4	-541.79	0.20	-24.06	5.33	-1.14		
69.31														
							48.9	-541.79	-687.00	-24.06	5.33	-4.15	-	
14.63														
	55	92	69.54	6.06	-1.07e-04	-1374.39	0.0	-714.02	686.92	-44.54	10.86	6.06	-	
14.39														
			-14.52	-3.76	-3.65e-05	0.0	24.4	-714.02	-0.27	-44.54	10.86	1.15		
69.54														
							48.9	-714.02	-687.46	-44.54	10.86	-3.76	-	
14.52														
	55	93	100.89	-1.99	-7.64e-05	-2019.72	0.0	-681.11	1010.38	-5.10	-0.31	-1.99	-	
22.66														
			-22.66	-5.11	-3.14e-05	0.0	24.4	-681.11	0.51	-5.10	-0.31	-3.55		
100.89														
							48.9	-681.11	-1009.35	-5.10	-0.31	-5.11	-	
22.41														
	55	95	100.89	-1.99	-7.64e-05	-2019.72	0.0	-681.11	1010.38	-5.10	-0.31	-1.99	-	
22.66														
			-22.66	-5.11	-3.14e-05	0.0	24.4	-681.11	0.51	-5.10	-0.31	-3.55		
100.89														
							48.9	-681.11	-1009.35	-5.10	-0.31	-5.11	-	
22.41														
	55	96	101.12	2.21	-1.07e-04	-2019.72	0.0	-853.33	1009.91	-25.58	5.22	2.21	-	
22.32														
			-22.32	-4.73	-3.65e-05	0.0	24.4	-853.33	0.05	-25.58	5.22	-1.26		
101.12														
							48.9	-853.33	-1009.81	-25.58	5.22	-4.73	-	
22.30														
	55	101	69.31	1.86	-7.62e-05	-1374.39	0.0	-541.79	687.39	-24.06	5.33	1.86	-	
14.72														
			-14.72	-4.15	-3.14e-05	0.0	24.4	-541.79	0.20	-24.06	5.33	-1.14		
69.31														
							48.9	-541.79	-687.00	-24.06	5.33	-4.15	-	
14.63														
	55	105	75.63	1.09	-7.63e-05	-1503.46	0.0	-569.66	751.99	-20.27	4.20	1.09	-	
16.31														
			-16.31	-4.34	-3.14e-05	0.0	24.4	-569.66	0.26	-20.27	4.20	-1.62		
75.63														
							48.9	-569.66	-751.47	-20.27	4.20	-4.34	-	
16.19														
	55	107	75.63	1.09	-7.63e-05	-1503.46	0.0	-569.66	751.99	-20.27	4.20	1.09	-	
16.31														
			-16.31	-4.34	-3.14e-05	0.0	24.4	-569.66	0.26	-20.27	4.20	-1.62		
75.63														
							48.9	-569.66	-751.47	-20.27	4.20	-4.34	-	
16.19														
	55	108	75.81	4.45	-1.01e-04	-1503.46	0.0	-707.43	751.61	-36.65	8.62	4.45	-	
16.04														
			-16.10	-4.03	-3.55e-05	0.0	24.4	-707.43	-0.11	-36.65	8.62	0.21		
75.81														
							48.9	-707.43	-751.84	-36.65	8.62	-4.03	-	
16.10														
	55	112	69.51	5.64	-1.04e-04	-1374.39	0.0	-696.79	686.97	-42.49	10.31	5.64	-	
14.42														
			-14.53	-3.80	-3.60e-05	0.0	24.4	-696.79	-0.22	-42.49	10.31	0.92		
69.51														
							48.9	-696.79	-687.42	-42.49	10.31	-3.80	-	

Viale Duca Alessandro n. 11 – 43123 Parma
Cell. 335 1403156 – E mail ing.concari@gmail.com
Sito web: studioaire.it – P.IVA 02561480340

14.53													
	55	113	69.31	1.86	-7.62e-05	-1374.39	0.0	-541.79	687.39	-24.06	5.33	1.86	-
14.72													
			-14.72	-4.15	-3.14e-05	0.0	24.4	-541.79	0.20	-24.06	5.33	-1.14	
69.31													
							48.9	-541.79	-687.00	-24.06	5.33	-4.15	-
14.63													
	55	115	69.31	1.86	-7.62e-05	-1374.39	0.0	-541.79	687.39	-24.06	5.33	1.86	-
14.72													
			-14.72	-4.15	-3.14e-05	0.0	24.4	-541.79	0.20	-24.06	5.33	-1.14	
69.31													
							48.9	-541.79	-687.00	-24.06	5.33	-4.15	-
14.63													
	55	116	69.49	5.22	-1.01e-04	-1374.39	0.0	-679.57	687.02	-40.44	9.75	5.22	-
14.46													
			-14.54	-3.84	-3.55e-05	0.0	24.4	-679.57	-0.18	-40.44	9.75	0.69	
69.49													
							48.9	-679.57	-687.37	-40.44	9.75	-3.84	-
14.54													
	56	6	136.30	30.21	-1.41e-04	-2754.71	0.0	-216.09	1381.68	-180.52	39.00	30.21	-
33.10													
			-33.10	-13.08	-4.51e-05	0.0	24.4	-216.09	4.33	-180.52	39.00	8.56	
136.30													
							48.9	-216.09	-1373.02	-180.52	39.00	-13.08	-
30.99													
	56	7	136.80	30.42	-9.58e-05	-2754.71	0.0	-292.13	1381.24	-188.61	41.71	30.42	-
32.49													
			-32.49	-13.84	-3.78e-05	0.0	24.4	-292.13	3.89	-188.61	41.71	8.29	
136.80													
							48.9	-292.13	-1373.47	-188.61	41.71	-13.84	-
30.60													
	56	10	68.20	17.17	-1.19e-04	-1374.39	0.0	6.49	690.29	-98.94	21.19	17.17	-
16.55													
			-16.55	-6.68	-3.69e-05	0.0	24.4	6.49	3.10	-98.94	21.19	5.24	
68.20													
							48.9	6.49	-684.09	-98.94	21.19	-6.68	-
15.03													
	56	25	68.25	30.94	-9.08e-04	-1374.39	0.0	-112.26	688.14	-144.65	30.13	30.94	-
16.01													
			-16.01	-16.77	-4.32e-04	0.0	24.4	-112.26	0.94	-144.65	30.13	7.08	
68.25													
							48.9	-112.26	-686.25	-144.65	30.13	-16.77	-
15.46													
	56	41	70.71	31.82	-3.47e-04	-1374.39	0.0	-687.47	686.12	-130.25	25.70	31.82	-
13.06													
			-13.49	-15.58	-2.38e-04	0.0	24.4	-687.47	-1.07	-130.25	25.70	8.12	
70.71													
							48.9	-687.47	-688.27	-130.25	25.70	-15.58	-
13.49													
	56	50	63.75	10.92	-3.40e-04	-1374.39	0.0	1211.16	695.14	-81.14	16.43	10.92	-
22.17													
			-22.17	-2.84	-2.99e-04	0.0	24.4	1211.16	7.94	-81.14	16.43	4.04	
63.75													
							48.9	1211.16	-679.25	-81.14	16.43	-2.84	-
18.31													
	56	51	71.56	21.89	1.04e-04	-1374.39	0.0	-881.61	686.61	-95.08	19.92	21.89	-
12.30													
			-12.57	-8.17	2.25e-04	0.0	24.4	-881.61	-0.58	-95.08	19.92	6.86	
71.56													
							48.9	-881.61	-687.77	-95.08	19.92	-8.17	-
12.57													
	56	73	70.14	24.68	-2.08e-04	-1374.39	0.0	-520.77	687.60	-128.65	27.77	24.68	-
13.97													
			-13.97	-12.32	-1.23e-04	0.0	24.4	-520.77	0.41	-128.65	27.77	6.18	
70.14													
							48.9	-520.77	-686.79	-128.65	27.77	-12.32	-
13.73													
	56	82	66.35	14.41	-2.04e-04	-1374.39	0.0	519.62	692.31	-92.96	19.71	14.41	-
18.88													
			-18.88	-5.13	-1.50e-04	0.0	24.4	519.62	5.12	-92.96	19.71	4.64	
66.35													
							48.9	519.62	-682.08	-92.96	19.71	-5.13	-
16.39													
	56	83	70.52	20.14	8.70e-06	-1374.39	0.0	-577.61	687.86	-112.46	25.20	20.14	-
13.64													
			-13.64	-8.95	8.29e-05	0.0	24.4	-577.61	0.67	-112.46	25.20	5.60	
70.52													
							48.9	-577.61	-686.53	-112.46	25.20	-8.95	-
13.30													
	56	90	68.37	17.24	-1.04e-04	-1374.39	0.0	-18.85	690.15	-101.63	22.10	17.24	-
16.34													
			-16.34	-6.94	-3.45e-05	0.0	24.4	-18.85	2.95	-101.63	22.10	5.15	
68.37													
							48.9	-18.85	-684.24	-101.63	22.10	-6.94	-
14.90													
	56	94	100.02	22.46	-1.04e-04	-2019.72	0.0	-153.33	1013.10	-134.62	29.19	22.46	-
24.19													
			-24.19	-9.71	-3.40e-05	0.0	24.4	-153.33	3.24	-134.62	29.19	6.37	
100.02													
							48.9	-153.33	-1006.62	-134.62	29.19	-9.71	-
22.61													
	56	95	100.36	22.60	-7.37e-05	-2019.72	0.0	-204.03	1012.81	-140.01	30.99	22.60	-
23.79													
			-23.79	-10.22	-2.92e-05	0.0	24.4	-204.03	2.95	-140.01	30.99	6.19	
100.36													
							48.9	-204.03	-1006.92	-140.01	30.99	-10.22	-
22.35													
	56	106	74.77	18.32	-9.77e-05	-1503.46	0.0	-55.89	754.68	-109.31	23.87	18.32	-

Viale Duca Alessandro n. 11 – 43123 Parma
Cell. 335 1403156 – E mail ing.concari@gmail.com
Sito web: studioaire.it – P.IVA 02561480340

17.83			-17.83	-7.60	-3.34e-05	0.0	24.4	-55.89	2.95	-109.31	23.87	5.36		
74.77							48.9	-55.89	-748.78	-109.31	23.87	-7.60	-	
16.39	56	107	75.03	18.43	-7.36e-05	-1503.46	0.0	-96.44	754.44	-113.62	25.32	18.43	-	
17.51			-17.51	-8.00	-2.95e-05	0.0	24.4	-96.44	2.71	-113.62	25.32	5.21		
75.03							48.9	-96.44	-749.01	-113.62	25.32	-8.00	-	
16.18	56	111	68.40	17.26	-1.01e-04	-1374.39	0.0	-23.92	690.12	-102.17	22.28	17.26	-	
16.30			-16.30	-6.99	-3.40e-05	0.0	24.4	-23.92	2.92	-102.17	22.28	5.13		
68.40							48.9	-23.92	-684.27	-102.17	22.28	-6.99	-	
14.88	56	114	68.44	17.27	-9.77e-05	-1374.39	0.0	-28.99	690.09	-102.71	22.46	17.27	-	
16.26			-16.26	-7.04	-3.35e-05	0.0	24.4	-28.99	2.89	-102.71	22.46	5.12		
68.44							48.9	-28.99	-684.30	-102.71	22.46	-7.04	-	
14.85	56	115	68.70	17.39	-7.36e-05	-1374.39	0.0	-69.55	689.85	-107.02	23.90	17.39	-	
15.94			-15.94	-7.45	-2.96e-05	0.0	24.4	-69.55	2.66	-107.02	23.90	4.97		
68.70							48.9	-69.55	-684.54	-107.02	23.90	-7.45	-	
14.64	57	6	137.36	-1.68	-1.44e-04	-2754.71	0.0	-1001.96	1375.49	-32.19	11.99	-1.68	-	
30.53			-31.44	-4.27	-5.27e-05	0.0	24.4	-1001.96	-1.86	-32.19	11.99	-2.97		
137.36							48.9	-1001.96	-1379.21	-32.19	11.99	-4.27	-	
31.44	57	7	137.53	-3.40	-9.86e-05	-2754.71	0.0	-812.45	1376.85	8.08	0.61	-7.70	-	
30.69			-30.94	-7.70	-4.45e-05	0.0	24.4	-812.45	-0.50	8.08	0.61	-5.55		
137.53							48.9	-812.45	-1377.85	8.08	0.61	-3.40	-	
30.94	57	8	137.36	-1.68	-1.44e-04	-2754.71	0.0	-1001.96	1375.49	-32.19	11.99	-1.68	-	
30.53			-31.44	-4.27	-5.27e-05	0.0	24.4	-1001.96	-1.86	-32.19	11.99	-2.97		
137.36							48.9	-1001.96	-1379.21	-32.19	11.99	-4.27	-	
31.44	57	9	69.13	-0.53	-7.59e-05	-1374.39	0.0	-464.69	686.28	-25.29	8.95	-0.53	-	
14.63			-15.08	-3.01	-3.37e-05	0.0	24.4	-464.69	-0.91	-25.29	8.95	-1.77		
69.13							48.9	-464.69	-688.11	-25.29	8.95	-3.01	-	
15.08	57	10	68.96	5.49	-1.22e-04	-1374.39	0.0	-654.19	684.92	-65.56	20.34	5.49	-	
14.47			-15.59	-3.88	-4.19e-05	0.0	24.4	-654.19	-2.27	-65.56	20.34	0.81		
68.96							48.9	-654.19	-689.47	-65.56	20.34	-3.88	-	
15.59	57	46	70.88	-0.33	-3.50e-04	-1374.39	0.0	-1541.30	678.29	1.94	-8.03	-18.10	-	
11.08			-15.14	-18.10	6.54e-05	0.0	24.4	-1541.30	-8.90	1.94	-8.03	-9.21		
70.88							48.9	-1541.30	-696.10	1.94	-8.03	-0.33	-	
15.14	57	47	66.81	42.79	1.07e-04	-1374.39	0.0	-38.12	688.77	-220.32	73.30	42.79	-	
17.42			-17.42	-8.74	-1.51e-04	0.0	24.4	-38.12	1.57	-220.32	73.30	17.02		
66.81							48.9	-38.12	-685.62	-220.32	73.30	-8.74	-	
16.95	57	53	65.69	35.92	-3.56e-04	-1374.39	0.0	121.10	687.76	-213.31	69.32	35.92	-	
18.44			-18.44	-12.00	1.24e-04	0.0	24.4	121.10	0.56	-213.31	69.32	11.96		
65.69							48.9	121.10	-686.63	-213.31	69.32	-12.00	-	
18.16	57	56	71.99	2.94	1.13e-04	-1374.39	0.0	-1700.53	679.30	-5.06	-4.06	-11.23	-	
10.07			-13.93	-11.23	-2.10e-04	0.0	24.4	-1700.53	-7.89	-5.06	-4.06	-4.14		
71.99							48.9	-1700.53	-695.09	-5.06	-4.06	2.94	-	
13.93	57	78	69.86	-2.09	-2.10e-04	-1374.39	0.0	-995.72	682.35	-25.35	4.89	-6.46	-	
13.02			-15.25	-6.46	7.27e-06	0.0	24.4	-995.72	-4.84	-25.35	4.89	-4.27		
69.86							48.9	-995.72	-692.04	-25.35	4.89	-2.09	-	
15.25	57	79	68.23	11.82	9.43e-06	-1374.39	0.0	-135.80	688.76	-68.19	25.16	11.82	-	
16.08			-16.08	-4.86	-8.34e-05	0.0	24.4	-135.80	1.57	-68.19	25.16	3.48		
68.23							48.9	-135.80	-685.63	-68.19	25.16	-4.86	-	
15.45	57	85	67.71	8.64	-2.12e-04	-1374.39	0.0	-89.57	688.29	-64.80	23.34	8.64	-	
16.55			-16.55	-6.39	3.42e-05	0.0	24.4	-89.57	1.10	-64.80	23.34	1.12		

	67.71												
							48.9	-89.57	-686.10	-64.80	23.34	-6.39	-
16.02													
	57	88	70.37	-0.56	1.15e-05	-1374.39	0.0	-1041.94	682.82	-28.74	6.71	-3.28	-
12.55													
			-14.69	-3.28	-1.10e-04	0.0	24.4	-1041.94	-4.38	-28.74	6.71	-1.92	
	70.37												
							48.9	-1041.94	-691.57	-28.74	6.71	-0.56	-
14.69													
	57	89	69.13	-0.53	-7.59e-05	-1374.39	0.0	-464.69	686.28	-25.29	8.95	-0.53	-
14.63													
			-15.08	-3.01	-3.37e-05	0.0	24.4	-464.69	-0.91	-25.29	8.95	-1.77	
	69.13												
							48.9	-464.69	-688.11	-25.29	8.95	-3.01	-
15.08													
	57	90	69.02	3.48	-1.06e-04	-1374.39	0.0	-591.02	685.37	-52.14	16.54	3.48	-
14.53													
			-15.42	-3.59	-3.91e-05	0.0	24.4	-591.02	-1.82	-52.14	16.54	-0.05	
	69.02												
							48.9	-591.02	-689.01	-52.14	16.54	-3.59	-
15.42													
	57	94	100.79	-1.19	-1.06e-04	-2019.72	0.0	-729.93	1008.50	-24.83	9.19	-1.19	-
22.30													
			-22.97	-3.25	-3.96e-05	0.0	24.4	-729.93	-1.36	-24.83	9.19	-2.22	
	100.79												
							48.9	-729.93	-1011.22	-24.83	9.19	-3.25	-
22.97													
	57	95	100.90	-2.67	-7.59e-05	-2019.72	0.0	-603.59	1009.41	2.01	1.60	-5.20	-
22.41													
			-22.63	-5.20	-3.41e-05	0.0	24.4	-603.59	-0.46	2.01	1.60	-3.94	
	100.90												
							48.9	-603.59	-1010.32	2.01	1.60	-2.67	-
22.63													
	57	96	100.79	-1.19	-1.06e-04	-2019.72	0.0	-729.93	1008.50	-24.83	9.19	-1.19	-
22.30													
			-22.97	-3.25	-3.96e-05	0.0	24.4	-729.93	-1.36	-24.83	9.19	-2.22	
	100.79												
							48.9	-729.93	-1011.22	-24.83	9.19	-3.25	-
22.97													
	57	101	69.13	-0.53	-7.59e-05	-1374.39	0.0	-464.69	686.28	-25.29	8.95	-0.53	-
14.63													
			-15.08	-3.01	-3.37e-05	0.0	24.4	-464.69	-0.91	-25.29	8.95	-1.77	
	69.13												
							48.9	-464.69	-688.11	-25.29	8.95	-3.01	-
15.08													
	57	106	75.40	1.74	-1.00e-04	-1503.46	0.0	-593.54	750.18	-41.31	13.55	1.74	-
16.10													
			-16.86	-3.41	-3.81e-05	0.0	24.4	-593.54	-1.55	-41.31	13.55	-0.83	
	75.40												
							48.9	-593.54	-753.28	-41.31	13.55	-3.41	-
16.86													
	57	107	75.49	-1.47	-7.59e-05	-1503.46	0.0	-492.47	750.90	-19.83	7.48	-1.47	-
16.19													
			-16.59	-2.95	-3.38e-05	0.0	24.4	-492.47	-0.82	-19.83	7.48	-2.21	
	75.49												
							48.9	-492.47	-752.55	-19.83	7.48	-2.95	-
16.59													
	57	108	75.40	1.74	-1.00e-04	-1503.46	0.0	-593.54	750.18	-41.31	13.55	1.74	-
16.10													
			-16.86	-3.41	-3.81e-05	0.0	24.4	-593.54	-1.55	-41.31	13.55	-0.83	
	75.40												
							48.9	-593.54	-753.28	-41.31	13.55	-3.41	-
16.86													
	57	111	69.03	3.08	-1.03e-04	-1374.39	0.0	-578.39	685.46	-49.45	15.78	3.08	-
14.54													
			-15.38	-3.53	-3.86e-05	0.0	24.4	-578.39	-1.73	-49.45	15.78	-0.23	
	69.03												
							48.9	-578.39	-688.92	-49.45	15.78	-3.53	-
15.38													
	57	112	69.03	3.08	-1.03e-04	-1374.39	0.0	-578.39	685.46	-49.45	15.78	3.08	-
14.54													
			-15.38	-3.53	-3.86e-05	0.0	24.4	-578.39	-1.73	-49.45	15.78	-0.23	
	69.03												
							48.9	-578.39	-688.92	-49.45	15.78	-3.53	-
15.38													
	57	113	69.13	-0.53	-7.59e-05	-1374.39	0.0	-464.69	686.28	-25.29	8.95	-0.53	-
14.63													
			-15.08	-3.01	-3.37e-05	0.0	24.4	-464.69	-0.91	-25.29	8.95	-1.77	
	69.13												
							48.9	-464.69	-688.11	-25.29	8.95	-3.01	-
15.08													
	57	114	69.04	2.68	-1.00e-04	-1374.39	0.0	-565.76	685.56	-46.77	15.03	2.68	-
14.55													
			-15.35	-3.48	-3.81e-05	0.0	24.4	-565.76	-1.64	-46.77	15.03	-0.40	
	69.04												
							48.9	-565.76	-688.83	-46.77	15.03	-3.48	-
15.35													
	57	115	69.13	-0.53	-7.59e-05	-1374.39	0.0	-464.69	686.28	-25.29	8.95	-0.53	-
14.63													
			-15.08	-3.01	-3.37e-05	0.0	24.4	-464.69	-0.91	-25.29	8.95	-1.77	
	69.13												
							48.9	-464.69	-688.11	-25.29	8.95	-3.01	-
15.08													
	57	116	69.04	2.68	-1.00e-04	-1374.39	0.0	-565.76	685.56	-46.77	15.03	2.68	-
14.55													
			-15.35	-3.48	-3.81e-05	0.0	24.4	-565.76	-1.64	-46.77	15.03	-0.40	
	69.04												
							48.9	-565.76	-688.83	-46.77	15.03	-3.48	-

Viale Duca Alessandro n. 11 – 43123 Parma
Cell. 335 1403156 – E mail ing.concari@gmail.com
Sito web: studioaire.it – P.IVA 02561480340

15.35													
	58	5	139.27	11.65	-9.50e-05	-2754.71	0.0	-393.39	1383.61	-139.49	46.75	11.65	-
30.60													
			-30.60	-3.94	-3.86e-05	0.0	24.4	-393.39	6.26	-139.49	46.75	3.86	
139.27													
							48.9	-393.39	-1371.09	-139.49	46.75	-3.94	-
27.54													
	58	6	139.16	10.75	-1.40e-04	-2754.71	0.0	-347.08	1384.76	-125.70	43.34	10.75	-
31.00													
			-31.00	-1.92	-4.58e-05	0.0	24.4	-347.08	7.40	-125.70	43.34	4.41	
139.16													
							48.9	-347.08	-1369.95	-125.70	43.34	-1.92	-
27.38													
	58	7	139.27	11.65	-9.50e-05	-2754.71	0.0	-393.39	1383.61	-139.49	46.75	11.65	-
30.60													
			-30.60	-3.94	-3.86e-05	0.0	24.4	-393.39	6.26	-139.49	46.75	3.86	
139.27													
							48.9	-393.39	-1371.09	-139.49	46.75	-3.94	-
27.54													
	58	10	70.28	6.28	-1.18e-04	-1374.39	0.0	-96.13	692.63	-66.69	23.35	6.28	-
15.04													
			-15.04	5.49e-03	-3.73e-05	0.0	24.4	-96.13	5.43	-66.69	23.35	3.15	
70.28													
							48.9	-96.13	-681.76	-66.69	23.35	5.49e-03	-
12.38													
	58	26	68.84	6.35	-9.04e-04	-1374.39	0.0	292.34	693.52	-80.61	31.89	6.35	-
16.83													
			-16.83	-2.54	-3.77e-04	0.0	24.4	292.34	6.32	-80.61	31.89	1.91	
68.84													
							48.9	292.34	-680.87	-80.61	31.89	-2.54	-
13.46													
	58	44	69.91	10.66	1.11e-04	-1374.39	0.0	724.57	699.52	-82.01	14.75	10.66	-
17.38													
			-17.38	1.51	1.64e-04	0.0	24.4	724.57	12.33	-82.01	14.75	6.08	
69.91													
							48.9	724.57	-674.87	-82.01	14.75	1.51	-
10.77													
	58	50	67.99	4.89	-3.41e-04	-1374.39	0.0	896.69	698.45	-68.33	19.76	4.89	-
18.32													
			-18.32	0.78	-2.99e-04	0.0	24.4	896.69	11.26	-68.33	19.76	2.84	
67.99													
							48.9	896.69	-675.94	-68.33	19.76	0.78	-
13.68													
	58	51	72.37	6.26	1.05e-04	-1374.39	0.0	-860.54	689.29	-36.07	19.13	6.26	-
12.57													
			-12.57	3.27	2.24e-04	0.0	24.4	-860.54	2.09	-36.07	19.13	4.77	
72.37													
							48.9	-860.54	-685.10	-36.07	19.13	3.27	-
10.68													
	58	76	70.16	8.55	1.26e-05	-1374.39	0.0	279.61	695.37	-77.14	20.27	8.55	-
15.97													
			-15.97	0.13	5.57e-05	0.0	24.4	279.61	8.18	-77.14	20.27	4.34	
70.16													
							48.9	279.61	-679.01	-77.14	20.27	0.13	-
11.69													
	58	81	71.04	7.14	-2.04e-04	-1374.39	0.0	-531.77	689.09	-76.55	29.74	7.14	-
13.61													
			-13.61	-2.28	-1.54e-05	0.0	24.4	-531.77	1.90	-76.55	29.74	2.43	
71.04													
							48.9	-531.77	-685.30	-76.55	29.74	-2.28	-
12.28													
	58	82	69.28	5.88	-2.04e-04	-1374.39	0.0	331.47	694.89	-70.89	22.57	5.88	-
16.40													
			-16.40	-0.15	-1.50e-04	0.0	24.4	331.47	7.70	-70.89	22.57	2.86	
69.28													
							48.9	331.47	-679.50	-70.89	22.57	-0.15	-
13.02													
	58	83	71.39	7.53	9.46e-06	-1374.39	0.0	-566.97	689.29	-75.37	27.30	7.53	-
13.31													
			-13.31	-1.72	8.23e-05	0.0	24.4	-566.97	2.10	-75.37	27.30	2.90	
71.39													
							48.9	-566.97	-685.10	-75.37	27.30	-1.72	-
11.90													
	58	90	70.32	6.59	-1.03e-04	-1374.39	0.0	-111.57	692.24	-71.29	24.48	6.59	-
14.91													
			-14.91	-0.67	-3.49e-05	0.0	24.4	-111.57	5.05	-71.29	24.48	2.96	
70.32													
							48.9	-111.57	-682.14	-71.29	24.48	-0.67	-
12.44													
	58	93	102.24	8.73	-7.31e-05	-2019.72	0.0	-281.26	1014.61	-103.73	34.73	8.73	-
22.35													
			-22.35	-2.89	-2.97e-05	0.0	24.4	-281.26	4.75	-103.73	34.73	2.92	
102.24													
							48.9	-281.26	-1005.11	-103.73	34.73	-2.89	-
20.03													
	58	94	102.16	8.13	-1.03e-04	-2019.72	0.0	-250.38	1015.37	-94.53	32.46	8.13	-
22.62													
			-22.62	-1.55	-3.46e-05	0.0	24.4	-250.38	5.51	-94.53	32.46	3.29	
102.16													
							48.9	-250.38	-1004.35	-94.53	32.46	-1.55	-
19.93													
	58	95	102.24	8.73	-7.31e-05	-2019.72	0.0	-281.26	1014.61	-103.73	34.73	8.73	-
22.35													
			-22.35	-2.89	-2.97e-05	0.0	24.4	-281.26	4.75	-103.73	34.73	2.92	
102.24													
							48.9	-281.26	-1005.11	-103.73	34.73	-2.89	-
20.03													
	58	105	76.76	7.49	-7.32e-05	-1503.46	0.0	-170.21	756.11	-85.13	28.35	7.49	-

Viale Duca Alessandro n. 11 – 43123 Parma
Cell. 335 1403156 – E mail ing.concari@gmail.com
Sito web: studioaire.it – P.IVA 02561480340

16.18			-16.18	-2.19	-3.00e-05	0.0	24.4	-170.21	4.38	-85.13	28.35	2.65		
76.76							48.9	-170.21	-747.35	-85.13	28.35	-2.19	-	
14.04	58	106	76.70	7.01	-9.73e-05	-1503.46	0.0	-145.51	756.72	-77.78	26.53	7.01	-	
16.39			-16.39	-1.11	-3.38e-05	0.0	24.4	-145.51	4.99	-77.78	26.53	2.95		
76.70							48.9	-145.51	-746.74	-77.78	26.53	-1.11	-	
13.96	58	107	76.76	7.49	-7.32e-05	-1503.46	0.0	-170.21	756.11	-85.13	28.35	7.49	-	
16.18			-16.18	-2.19	-3.00e-05	0.0	24.4	-170.21	4.38	-85.13	28.35	2.65		
76.76							48.9	-170.21	-747.35	-85.13	28.35	-2.19	-	
14.04	58	111	70.33	6.65	-1.00e-04	-1374.39	0.0	-114.66	692.17	-72.21	24.71	6.65	-	
14.88			-14.88	-0.80	-3.44e-05	0.0	24.4	-114.66	4.97	-72.21	24.71	2.92		
70.33							48.9	-114.66	-682.22	-72.21	24.71	-0.80	-	
12.45	58	113	70.40	7.19	-7.33e-05	-1374.39	0.0	-142.45	691.48	-80.49	26.75	7.19	-	
14.64			-14.64	-2.01	-3.00e-05	0.0	24.4	-142.45	4.29	-80.49	26.75	2.59		
70.40							48.9	-142.45	-682.91	-80.49	26.75	-2.01	-	
12.55	58	114	70.33	6.71	-9.74e-05	-1374.39	0.0	-117.75	692.09	-73.13	24.94	6.71	-	
14.85			-14.85	-0.94	-3.39e-05	0.0	24.4	-117.75	4.90	-73.13	24.94	2.88		
70.33							48.9	-117.75	-682.30	-73.13	24.94	-0.94	-	
12.46	58	115	70.40	7.19	-7.33e-05	-1374.39	0.0	-142.45	691.48	-80.49	26.75	7.19	-	
14.64			-14.64	-2.01	-3.00e-05	0.0	24.4	-142.45	4.29	-80.49	26.75	2.59		
70.40							48.9	-142.45	-682.91	-80.49	26.75	-2.01	-	
12.55	59	2	86.96	10.87	-1.44e-04	-1786.71	0.0	-504.54	884.72	-103.26	34.22	10.87	-	
20.12			-24.34	-0.90	-5.47e-05	0.0	24.4	-504.54	-8.63	-103.26	34.22	4.99		
86.96							48.9	-504.54	-901.98	-103.26	34.22	-0.90	-	
24.34	59	7	136.14	4.42	-9.79e-05	-2754.71	0.0	-591.61	1372.17	-2.36	6.71	-1.92	-	
30.94			-33.47	-1.92	-4.72e-05	0.0	24.4	-591.61	-5.18	-2.36	6.71	1.25		
136.14							48.9	-591.61	-1382.53	-2.36	6.71	4.42	-	
33.47	59	8	134.95	4.53	-1.44e-04	-2754.71	0.0	-692.84	1369.37	-53.87	21.46	4.53	-	
31.44			-35.35	2.39	-5.59e-05	0.0	24.4	-692.84	-7.98	-53.87	21.46	3.46		
134.95							48.9	-692.84	-1385.34	-53.87	21.46	2.39	-	
35.35	59	9	67.81	3.40	-7.56e-05	-1374.39	0.0	-310.24	682.71	-39.81	14.98	3.40	-	
15.09			-17.28	0.87	-3.54e-05	0.0	24.4	-310.24	-4.48	-39.81	14.98	2.13		
67.81							48.9	-310.24	-691.68	-39.81	14.98	0.87	-	
17.28	59	15	115.79	4.15	-7.52e-05	-2342.39	0.0	-498.54	1167.36	9.58	2.21	-2.94	-	
26.41			-28.29	-2.94	-3.66e-05	0.0	24.4	-498.54	-3.84	9.58	2.21	0.61		
115.79							48.9	-498.54	-1175.03	9.58	2.21	4.15	-	
28.29	59	27	68.81	23.83	5.64e-04	-1374.39	0.0	-520.61	680.96	-145.18	50.55	23.83	-	
14.91			-15.46	-4.88	2.83e-04	0.0	24.4	-520.61	-6.24	-145.18	50.55	9.48		
68.81							48.9	-520.61	-693.43	-145.18	50.55	-4.88	-	
15.46	59	42	62.77	13.87	-3.35e-04	-1374.39	0.0	-812.74	664.22	-1.16	-3.68	-10.75	-	
15.10			-27.34	-10.75	-6.07e-05	0.0	24.4	-812.74	-22.98	-1.16	-3.68	1.56		
62.77							48.9	-812.74	-710.17	-1.16	-3.68	13.87	-	
27.34	59	47	68.09	45.67	1.07e-04	-1374.39	0.0	-137.32	690.94	-296.88	96.12	45.67	-	
16.95			-16.95	-21.58	-1.53e-04	0.0	24.4	-137.32	3.75	-296.88	96.12	12.04		
68.09							48.9	-137.32	-683.45	-296.88	96.12	-21.58	-	
14.86	59	53	66.15	38.08	-3.56e-04	-1374.39	0.0	22.69	688.37	-287.59	91.25	38.08	-	
18.17			-18.17	-24.13	1.20e-04	0.0	24.4	22.69	1.18	-287.59	91.25	6.98		
66.15							48.9	22.69	-686.02	-287.59	91.25	-24.13	-	
17.51	59	55	67.04	43.27	1.15e-04	-1374.39	0.0	-88.68	688.87	-299.56	97.09	43.27	-	
17.39			-17.39	-25.30	9.27e-05	0.0	24.4	-88.68	1.67	-299.56	97.09	8.98		

67.04													
							48.9	-88.68	-685.52	-299.56	97.09	-25.30	-
16.51													
	59	56	64.74	17.47	1.13e-04	-1374.39	0.0	-972.17	665.64	-8.51	0.43	-3.75	-
13.93													
			-24.56	-3.75	-2.12e-04	0.0	24.4	-972.17	-21.56	-8.51	0.43	6.86	
64.74													
							48.9	-972.17	-708.75	-8.51	0.43	17.47	-
24.56													
	59	74	65.24	5.97	-2.03e-04	-1374.39	0.0	-561.83	673.72	-38.21	11.19	-0.89	-
15.24													
			-22.27	-0.89	-4.91e-05	0.0	24.4	-561.83	-13.47	-38.21	11.19	2.54	
65.24													
							48.9	-561.83	-700.67	-38.21	11.19	5.97	-
22.27													
	59	75	69.11	14.58	3.32e-06	-1374.39	0.0	-166.62	688.71	-96.34	34.50	14.58	-
15.47													
			-15.47	-6.39	-3.09e-05	0.0	24.4	-166.62	1.52	-96.34	34.50	4.09	
69.11													
							48.9	-166.62	-685.68	-96.34	34.50	-6.39	-
14.29													
	59	79	69.09	14.83	9.76e-06	-1374.39	0.0	-166.83	689.22	-97.19	34.83	14.83	-
15.45													
			-15.45	-6.86	-8.47e-05	0.0	24.4	-166.83	2.02	-97.19	34.83	3.98	
69.09													
							48.9	-166.83	-685.17	-97.19	34.83	-6.86	-
14.34													
	59	85	68.20	11.34	-2.12e-04	-1374.39	0.0	-112.47	688.07	-92.37	32.53	11.34	-
16.02													
			-16.02	-7.97	3.22e-05	0.0	24.4	-112.47	0.88	-92.37	32.53	1.68	
68.20													
							48.9	-112.47	-686.32	-92.37	32.53	-7.97	-
15.55													
	59	87	68.64	13.79	1.31e-05	-1374.39	0.0	-145.82	688.32	-98.39	35.26	13.79	-
15.64													
			-15.64	-8.50	2.30e-05	0.0	24.4	-145.82	1.12	-98.39	35.26	2.64	
68.64													
							48.9	-145.82	-686.07	-98.39	35.26	-8.50	-
15.06													
	59	88	66.14	7.55	1.19e-05	-1374.39	0.0	-615.99	674.37	-42.19	13.15	2.35	-
14.69													
			-21.00	2.35	-1.12e-04	0.0	24.4	-615.99	-12.83	-42.19	13.15	4.95	
66.14													
							48.9	-615.99	-700.02	-42.19	13.15	7.55	-
21.00													
	59	89	67.81	3.40	-7.56e-05	-1374.39	0.0	-310.24	682.71	-39.81	14.98	3.40	-
15.09													
			-17.28	0.87	-3.54e-05	0.0	24.4	-310.24	-4.48	-39.81	14.98	2.13	
67.81													
							48.9	-310.24	-691.68	-39.81	14.98	0.87	-
17.28													
	59	90	67.02	7.70	-1.06e-04	-1374.39	0.0	-377.73	680.84	-74.15	24.81	7.70	-
15.42													
			-18.53	-0.48	-4.12e-05	0.0	24.4	-377.73	-6.35	-74.15	24.81	3.61	
67.02													
							48.9	-377.73	-693.55	-74.15	24.81	-0.48	-
18.53													
	59	95	99.80	3.06	-7.53e-05	-2019.72	0.0	-435.77	1005.81	-6.88	6.47	-0.83	-
22.64													
			-24.62	-0.83	-3.62e-05	0.0	24.4	-435.77	-4.05	-6.88	6.47	1.12	
99.80													
							48.9	-435.77	-1013.91	-6.88	6.47	3.06	-
24.62													
	59	96	99.00	3.47	-1.06e-04	-2019.72	0.0	-503.26	1003.94	-41.22	16.30	3.47	-
22.97													
			-25.87	1.71	-4.20e-05	0.0	24.4	-503.26	-5.92	-41.22	16.30	2.59	
99.00													
							48.9	-503.26	-1015.78	-41.22	16.30	1.71	-
25.87													
	59	101	67.81	3.40	-7.56e-05	-1374.39	0.0	-310.24	682.71	-39.81	14.98	3.40	-
15.09													
			-17.28	0.87	-3.54e-05	0.0	24.4	-310.24	-4.48	-39.81	14.98	2.13	
67.81													
							48.9	-310.24	-691.68	-39.81	14.98	0.87	-
17.28													
	59	107	74.21	2.55	-7.55e-05	-1503.46	0.0	-335.34	747.33	-33.22	13.27	2.55	-
16.60													
			-18.75	1.31	-3.55e-05	0.0	24.4	-335.34	-4.40	-33.22	13.27	1.93	
74.21													
							48.9	-335.34	-756.12	-33.22	13.27	1.31	-
18.75													
	59	108	73.57	6.00	-1.00e-04	-1503.46	0.0	-389.33	745.84	-60.69	21.14	6.00	-
16.87													
			-19.75	0.23	-4.02e-05	0.0	24.4	-389.33	-5.89	-60.69	21.14	3.11	
73.57													
							48.9	-389.33	-757.62	-60.69	21.14	0.23	-
19.75													
	59	111	67.09	7.27	-1.03e-04	-1374.39	0.0	-370.98	681.03	-70.71	23.82	7.27	-
15.39													
			-18.40	-0.35	-4.06e-05	0.0	24.4	-370.98	-6.16	-70.71	23.82	3.46	
67.09													
							48.9	-370.98	-693.36	-70.71	23.82	-0.35	-
18.40													
	59	112	67.09	7.27	-1.03e-04	-1374.39	0.0	-370.98	681.03	-70.71	23.82	7.27	-
15.39													
			-18.40	-0.35	-4.06e-05	0.0	24.4	-370.98	-6.16	-70.71	23.82	3.46	
67.09													
							48.9	-370.98	-693.36	-70.71	23.82	-0.35	-

Viale Duca Alessandro n. 11 – 43123 Parma
Cell. 335 1403156 – E mail ing.concari@gmail.com
Sito web: studioaire.it – P.IVA 02561480340

18.40
59 113 67.81 3.40 -7.56e-05 -1374.39 0.0 -310.24 682.71 -39.81 14.98 3.40 -
15.09
-17.28 0.87 -3.54e-05 0.0 24.4 -310.24 -4.48 -39.81 14.98 2.13
67.81
48.9 -310.24 -691.68 -39.81 14.98 0.87 -
17.28
59 114 67.17 6.84 -1.00e-04 -1374.39 0.0 -364.23 681.22 -67.28 22.84 6.84 -
15.35
-18.28 -0.21 -4.00e-05 0.0 24.4 -364.23 -5.98 -67.28 22.84 3.32
67.17
48.9 -364.23 -693.17 -67.28 22.84 -0.21 -
18.28
59 115 67.81 3.40 -7.56e-05 -1374.39 0.0 -310.24 682.71 -39.81 14.98 3.40 -
15.09
-17.28 0.87 -3.54e-05 0.0 24.4 -310.24 -4.48 -39.81 14.98 2.13
67.81
48.9 -310.24 -691.68 -39.81 14.98 0.87 -
17.28
59 116 67.17 6.84 -1.00e-04 -1374.39 0.0 -364.23 681.22 -67.28 22.84 6.84 -
15.35
-18.28 -0.21 -4.00e-05 0.0 24.4 -364.23 -5.98 -67.28 22.84 3.32
67.17
48.9 -364.23 -693.17 -67.28 22.84 -0.21 -
18.28
60 5 142.96 24.18 -9.35e-05 -2754.71 0.0 -536.07 1386.19 -187.73 51.83 24.18 -
27.54
-27.54 -8.44 -3.75e-05 0.0 24.4 -536.07 8.83 -187.73 51.83 7.87
142.96
48.9 -536.07 -1368.52 -187.73 51.83 -8.44 -
23.23
60 8 143.73 24.06 -1.39e-04 -2754.71 0.0 -547.28 1388.70 -168.95 47.84 24.06 -
27.38
-27.38 -3.95 -4.45e-05 0.0 24.4 -547.28 11.35 -168.95 47.84 10.06
143.73
48.9 -547.28 -1366.00 -168.95 47.84 -3.95 -
21.84
60 9 72.99 14.01 -7.24e-05 -1374.39 0.0 -267.85 693.54 -104.26 29.34 14.01 -
12.55
-12.55 -3.47 -2.94e-05 0.0 24.4 -267.85 6.35 -104.26 29.34 5.27
72.99
48.9 -267.85 -680.85 -104.26 29.34 -3.47 -
9.45
60 25 70.16 25.52 -9.08e-04 -1374.39 0.0 -182.92 687.16 -115.32 38.48 25.52 -
14.07
-14.07 -4.78 -4.31e-04 0.0 24.4 -182.92 -0.04 -115.32 38.48 10.37
70.16
48.9 -182.92 -687.23 -115.32 38.48 -4.78 -
13.59
60 29 70.74 24.70 -9.06e-04 -1374.39 0.0 -198.03 687.83 -115.71 38.76 24.70 -
13.44
-13.44 -5.85 -3.58e-04 0.0 24.4 -198.03 0.64 -115.71 38.76 9.42
70.74
48.9 -198.03 -686.56 -115.71 38.76 -5.85 -
13.06
60 41 69.36 23.77 -3.46e-04 -1374.39 0.0 -494.76 681.83 -72.36 26.51 23.77 -
13.60
-15.66 3.45 -2.37e-04 0.0 24.4 -494.76 -5.36 -72.36 26.51 13.61
69.36
48.9 -494.76 -692.55 -72.36 26.51 3.45 -
15.66
60 44 79.96 8.70 1.13e-04 -1374.39 0.0 -2.21 715.95 -53.25 14.49 3.03 -
10.77
-10.77 3.03 1.64e-04 0.0 24.4 -2.21 28.75 -53.25 14.49 5.87
79.96
48.9 -2.21 -658.44 -53.25 14.49 8.70 2.72
60 50 76.74 11.14 -3.40e-04 -1374.39 0.0 188.20 711.31 -67.86 20.62 11.14 -
13.69
-13.69 9.15 -2.98e-04 0.0 24.4 188.20 24.12 -67.86 20.62 10.15
76.74
48.9 188.20 -663.08 -67.86 20.62 9.15 -
0.81
60 51 72.58 15.67 1.06e-04 -1374.39 0.0 -685.17 686.47 -57.76 20.38 15.67 -
10.68
-12.13 3.00 2.25e-04 0.0 24.4 -685.17 -0.72 -57.76 20.38 9.33
72.58
48.9 -685.17 -687.92 -57.76 20.38 3.00 -
12.13
60 57 71.62 19.22 -4.53e-04 -1374.39 0.0 -245.05 690.41 -112.15 34.02 19.22 -
13.27
-13.27 -4.64 -2.08e-04 0.0 24.4 -245.05 3.21 -112.15 34.02 7.29
71.62
48.9 -245.05 -683.98 -112.15 34.02 -4.64 -
11.46
60 73 70.48 18.92 -2.07e-04 -1374.39 0.0 -411.27 685.54 -113.42 33.09 18.92 -
13.24
-13.78 -5.51 -1.22e-04 0.0 24.4 -411.27 -1.66 -113.42 33.09 6.70
70.48
48.9 -411.27 -688.85 -113.42 33.09 -5.51 -
13.78
60 76 76.33 8.98 1.37e-05 -1374.39 0.0 -136.38 704.23 -75.06 21.32 8.98 -
11.69
-11.69 3.36 5.62e-05 0.0 24.4 -136.38 17.03 -75.06 21.32 6.17
76.33
48.9 -136.38 -670.16 -75.06 21.32 3.36 -
3.64
60 81 71.35 17.74 -2.03e-04 -1374.39 0.0 -432.64 686.52 -114.03 33.51 17.74 -
12.28

Viale Duca Alessandro n. 11 – 43123 Parma
Cell. 335 1403156 – E mail ing.concari@gmail.com
Sito web: studioaire.it – P.IVA 02561480340

		-13.00	-7.07	-1.46e-05	0.0	24.4	-432.64	-0.68	-114.03	33.51	5.33	71.35	
						48.9	-432.64	-687.87	-114.03	33.51	-7.07	13.00	-
60	82	74.86	12.66	-2.03e-04	-1374.39	0.0	-68.85	702.14	-82.47	24.23	12.66	13.02	-
		-13.02	3.45	-1.49e-04	0.0	24.4	-68.85	14.95	-82.47	24.23	8.05	74.86	
						48.9	-68.85	-672.24	-82.47	24.23	3.45	5.23	-
60	83	71.95	15.25	1.03e-05	-1374.39	0.0	-478.80	687.62	-106.01	30.18	15.25	11.90	-
		-12.18	-5.60	8.29e-05	0.0	24.4	-478.80	0.43	-106.01	30.18	4.82	71.95	
						48.9	-478.80	-686.77	-106.01	30.18	-5.60	12.18	-
60	89	72.99	14.01	-7.24e-05	-1374.39	0.0	-267.85	693.54	-104.26	29.34	14.01	12.55	-
		-12.55	-3.47	-2.94e-05	0.0	24.4	-267.85	6.35	-104.26	29.34	5.27	72.99	
						48.9	-267.85	-680.85	-104.26	29.34	-3.47	9.45	-
60	93	105.04	17.99	-7.20e-05	-2019.72	0.0	-393.10	1016.60	-139.06	38.47	17.99	20.04	-
		-20.04	-6.09	-2.89e-05	0.0	24.4	-393.10	6.74	-139.06	38.47	5.95	105.04	
						48.9	-393.10	-1003.12	-139.06	38.47	-6.09	16.74	-
60	96	105.55	17.91	-1.02e-04	-2019.72	0.0	-400.56	1018.27	-126.54	35.80	17.91	19.93	-
		-19.93	-3.09	-3.36e-05	0.0	24.4	-400.56	8.41	-126.54	35.80	7.41	105.55	
						48.9	-400.56	-1001.45	-126.54	35.80	-3.09	15.82	-
60	101	72.99	14.01	-7.24e-05	-1374.39	0.0	-267.85	693.54	-104.26	29.34	14.01	12.55	-
		-12.55	-3.47	-2.94e-05	0.0	24.4	-267.85	6.35	-104.26	29.34	5.27	72.99	
						48.9	-267.85	-680.85	-104.26	29.34	-3.47	9.45	-
60	105	79.40	14.81	-7.23e-05	-1503.46	0.0	-292.90	758.15	-111.22	31.16	14.81	14.05	-
		-14.05	-4.00	-2.93e-05	0.0	24.4	-292.90	6.42	-111.22	31.16	5.41	79.40	
						48.9	-292.90	-745.30	-111.22	31.16	-4.00	10.91	-
60	108	79.81	14.75	-9.64e-05	-1503.46	0.0	-298.87	759.49	-101.20	29.03	14.75	13.96	-
		-13.96	-1.60	-3.30e-05	0.0	24.4	-298.87	7.77	-101.20	29.03	6.57	79.81	
						48.9	-298.87	-743.96	-101.20	29.03	-1.60	10.17	-
60	113	72.99	14.01	-7.24e-05	-1374.39	0.0	-267.85	693.54	-104.26	29.34	14.01	12.55	-
		-12.55	-3.47	-2.94e-05	0.0	24.4	-267.85	6.35	-104.26	29.34	5.27	72.99	
						48.9	-267.85	-680.85	-104.26	29.34	-3.47	9.45	-
60	116	73.41	13.95	-9.65e-05	-1374.39	0.0	-273.83	694.88	-94.24	27.21	13.95	12.46	-
		-12.46	-1.07	-3.31e-05	0.0	24.4	-273.83	7.69	-94.24	27.21	6.44	73.41	
						48.9	-273.83	-679.51	-94.24	27.21	-1.07	8.71	-
61	1	6.44	22.28	7.11e-04	-101.56	0.0	41.30	50.96	-74.93	-14.50	22.28	0.04	
		0.04	1.70	-2.83e-05	0.0	25.0	41.30	0.17	-74.93	-14.50	11.99	6.44	
						50.0	41.30	-50.61	-74.93	-14.50	1.70	0.14	
61	5	5.28	28.89	7.92e-04	-101.56	0.0	688.38	46.13	-93.56	-17.50	28.89	0.04	
		-2.27	2.66	-2.59e-05	0.0	25.0	688.38	-4.65	-93.56	-17.50	15.77	5.24	
						50.0	688.38	-55.43	-93.56	-17.50	2.66	2.27	-
61	7	5.28	28.89	7.92e-04	-101.56	0.0	688.38	46.13	-93.56	-17.50	28.89	0.04	
		-2.27	2.66	-2.59e-05	0.0	25.0	688.38	-4.65	-93.56	-17.50	15.77	5.24	
						50.0	688.38	-55.43	-93.56	-17.50	2.66	2.27	-
61	10	4.17	16.19	6.96e-04	-78.12	0.0	-832.40	35.95	-57.70	-11.58	16.19	0.04	
		-1.51	0.55	-2.77e-05	0.0	25.0	-832.40	-3.12	-57.70	-11.58	8.37	4.15	
						50.0	-832.40	-42.18	-57.70	-11.58	0.55	1.51	-
61	16	3.14	22.80	7.78e-04	-78.12	0.0	-185.32	31.12	-76.32	-14.57	22.80	0.04	
		-3.91	1.51	-2.53e-05	0.0	25.0	-185.32	-7.94	-76.32	-14.57	12.16	2.95	
						50.0	-185.32	-47.00	-76.32	-14.57	1.51	3.91	-
61	29	0.41	22.44	2.46e-04	-78.12	0.0	2453.44	11.04	-128.21	-43.47	22.44	0.03	
		-13.97	-29.93	-2.89e-04	0.0	25.0	2453.44	-28.02	-128.21	-43.47	-3.75	2.09	-
						50.0	2453.44	-67.08	-128.21	-43.47	-29.93	13.97	-
61	32	11.46	31.21	1.15e-03	-78.12	0.0	-3898.20	59.71	11.71	20.39	10.71	0.05	
		0.05	10.71	2.18e-04	0.0	25.0	-3898.20	20.65	11.71	20.39	20.96	10.10	
						50.0	-3898.20	-18.42	11.71	20.39	31.21	10.38	
61	41	4.74e-03	12.03	-6.75e-04	-78.12	0.0	3070.64	-9.66	-72.87	-23.73	12.03	4.74e-03	
		-24.33	-11.66	-2.17e-04	0.0	25.0	3070.64	-48.72	-72.87	-23.73	0.19	7.28	-
						50.0	3070.64	-87.78	-72.87	-23.73	-11.66		-

Viale Duca Alessandro n. 11 – 43123 Parma
Cell. 335 1403156 – E mail ing.concari@gmail.com
Sito web: studioaire.it – P.IVA 02561480340

24.33													
	61	44	18.48	17.55	2.38e-03	-78.12	0.0	-6776.71	75.84	-41.54	-0.39	17.55	0.09
			0.09	11.01	1.64e-04	0.0	25.0	-6776.71	36.77	-41.54	-0.39	14.28	
14.17													
							50.0	-6776.71	-2.29	-41.54	-0.39	11.01	
18.48													
	61	61	2.33	19.69	4.00e-04	-78.12	0.0	1229.04	26.92	-88.87	-25.34	19.69	0.03
			-6.03	-12.36	-1.41e-04	0.0	25.0	1229.04	-12.15	-88.87	-25.34	3.66	1.88
							50.0	1229.04	-51.21	-88.87	-25.34	-12.36	-
6.03													
	61	66	4.57	22.93	8.66e-04	-78.12	0.0	-706.16	37.63	-90.54	-24.09	22.93	0.04
			-0.66	-9.34	9.31e-06	0.0	25.0	-706.16	-1.44	-90.54	-24.09	6.79	4.57
							50.0	-706.16	-40.50	-90.54	-24.09	-9.34	-
0.66													
	61	73	1.34	16.32	-1.43e-04	-78.12	0.0	2410.31	20.35	-64.86	-16.25	16.32	0.01
			-9.33	-3.52	-1.11e-04	0.0	25.0	2410.31	-18.71	-64.86	-16.25	6.40	0.22
							50.0	2410.31	-57.77	-64.86	-16.25	-3.52	-
9.33													
	61	76	9.59	16.94	1.40e-03	-78.12	0.0	-3268.56	54.57	-50.48	-6.51	16.94	0.06
			0.06	5.33	6.09e-05	0.0	25.0	-3268.56	15.51	-50.48	-6.51	11.13	8.82
							50.0	-3268.56	-23.55	-50.48	-6.51	5.33	7.82
	61	89	4.95	17.14	5.47e-04	-78.12	0.0	31.77	39.20	-57.64	-11.16	17.14	0.03
			0.03	1.31	-2.18e-05	0.0	25.0	31.77	0.13	-57.64	-11.16	9.22	4.95
							50.0	31.77	-38.93	-57.64	-11.16	1.31	0.11
	61	90	4.42	16.50	6.46e-04	-78.12	0.0	-544.35	37.03	-57.68	-11.44	16.50	0.04
			-0.97	0.80	-2.57e-05	0.0	25.0	-544.35	-2.03	-57.68	-11.44	8.65	4.42
							50.0	-544.35	-41.10	-57.68	-11.44	0.80	-
0.97													
	61	93	4.17	21.55	6.01e-04	-78.12	0.0	463.15	35.98	-70.06	-13.15	21.55	0.03
			-1.50	1.95	-2.02e-05	0.0	25.0	463.15	-3.08	-70.06	-13.15	11.75	4.15
							50.0	463.15	-42.14	-70.06	-13.15	1.95	-
1.50													
	61	95	4.17	21.55	6.01e-04	-78.12	0.0	463.15	35.98	-70.06	-13.15	21.55	0.03
			-1.50	1.95	-2.02e-05	0.0	25.0	463.15	-3.08	-70.06	-13.15	11.75	4.15
							50.0	463.15	-42.14	-70.06	-13.15	1.95	-
1.50													
	61	96	3.70	20.91	7.01e-04	-78.12	0.0	-112.96	33.81	-70.10	-13.43	20.91	0.04
			-2.57	1.44	-2.41e-05	0.0	25.0	-112.96	-5.25	-70.10	-13.43	11.18	3.62
							50.0	-112.96	-44.31	-70.10	-13.43	1.44	-
2.57													
	61	101	4.95	17.14	5.47e-04	-78.12	0.0	31.77	39.20	-57.64	-11.16	17.14	0.03
			0.03	1.31	-2.18e-05	0.0	25.0	31.77	0.13	-57.64	-11.16	9.22	4.95
							50.0	31.77	-38.93	-57.64	-11.16	1.31	0.11
	61	105	4.79	18.02	5.58e-04	-78.12	0.0	118.04	38.55	-60.13	-11.56	18.02	0.03
			-0.21	1.43	-2.14e-05	0.0	25.0	118.04	-0.51	-60.13	-11.56	9.73	4.79
							50.0	118.04	-39.57	-60.13	-11.56	1.43	-
0.21													
	61	107	4.79	18.02	5.58e-04	-78.12	0.0	118.04	38.55	-60.13	-11.56	18.02	0.03
			-0.21	1.43	-2.14e-05	0.0	25.0	118.04	-0.51	-60.13	-11.56	9.73	4.79
							50.0	118.04	-39.57	-60.13	-11.56	1.43	-
0.21													
	61	108	4.36	17.51	6.37e-04	-78.12	0.0	-342.85	36.82	-60.15	-11.78	17.51	0.03
			-1.07	1.03	-2.46e-05	0.0	25.0	-342.85	-2.24	-60.15	-11.78	9.27	4.36
							50.0	-342.85	-41.31	-60.15	-11.78	1.03	-
1.07													
	61	111	4.47	16.57	6.36e-04	-78.12	0.0	-486.74	37.25	-57.68	-11.41	16.57	0.03
			-0.86	0.85	-2.53e-05	0.0	25.0	-486.74	-1.82	-57.68	-11.41	8.71	4.47
							50.0	-486.74	-40.88	-57.68	-11.41	0.85	-
0.86													
	61	113	4.95	17.14	5.47e-04	-78.12	0.0	31.77	39.20	-57.64	-11.16	17.14	0.03
			0.03	1.31	-2.18e-05	0.0	25.0	31.77	0.13	-57.64	-11.16	9.22	4.95
							50.0	31.77	-38.93	-57.64	-11.16	1.31	0.11
	61	114	4.52	16.63	6.26e-04	-78.12	0.0	-429.12	37.46	-57.67	-11.38	16.63	0.03
			-0.75	0.90	-2.49e-05	0.0	25.0	-429.12	-1.60	-57.67	-11.38	8.77	4.52
							50.0	-429.12	-40.66	-57.67	-11.38	0.90	-
0.75													
	61	115	4.95	17.14	5.47e-04	-78.12	0.0	31.77	39.20	-57.64	-11.16	17.14	0.03
			0.03	1.31	-2.18e-05	0.0	25.0	31.77	0.13	-57.64	-11.16	9.22	4.95
							50.0	31.77	-38.93	-57.64	-11.16	1.31	0.11
	61	116	4.52	16.63	6.26e-04	-78.12	0.0	-429.12	37.46	-57.67	-11.38	16.63	0.03
			-0.75	0.90	-2.49e-05	0.0	25.0	-429.12	-1.60	-57.67	-11.38	8.77	4.52
							50.0	-429.12	-40.66	-57.67	-11.38	0.90	-
0.75													
	62	1	3.30	10.54	7.11e-04	-101.56	0.0	-262.93	35.74	-68.92	-15.72	10.54	0.17
			-7.34	-5.94	-2.68e-05	0.0	25.0	-262.93	-15.04	-68.92	-15.72	2.30	2.76
							50.0	-262.93	-65.82	-68.92	-15.72	-5.94	-
7.34													
	62	2	1.21	9.74	8.61e-04	-101.56	0.0	-825.28	32.81	-67.97	-15.55	9.74	-
1.44													
			-10.42	-6.51	-3.29e-05	0.0	25.0	-825.28	-17.97	-67.97	-15.55	1.62	0.42
							50.0	-825.28	-68.76	-67.97	-15.55	-6.51	-
10.42													
	62	5	0.54	13.55	7.91e-04	-101.56	0.0	-47.39	33.63	-86.27	-19.45	13.55	-
2.24													
			-10.80	-7.33	-2.39e-05	0.0	25.0	-47.39	-17.15	-86.27	-19.45	3.11	-
0.17													
							50.0	-47.39	-67.93	-86.27	-19.45	-7.33	-
10.80													
	62	6	-1.52	12.75	9.42e-04	-101.56	0.0	-609.75	30.70	-85.32	-19.28	12.75	-
3.85													
			-13.87	-7.90	-3.01e-05	0.0	25.0	-609.75	-20.08	-85.32	-19.28	2.43	-
2.51													
							50.0	-609.75	-70.86	-85.32	-19.28	-7.90	-
13.87													
	62	8	-1.52	12.75	9.42e-04	-101.56	0.0	-609.75	30.70	-85.32	-19.28	12.75	-
3.85													
			-13.87	-7.90	-3.01e-05	0.0	25.0	-609.75	-20.08	-85.32	-19.28	2.43	-
2.51													

Viale Duca Alessandro n. 11 – 43123 Parma
Cell. 335 1403156 – E mail ing.concari@gmail.com
Sito web: studioaire.it – P.IVA 02561480340

							50.0	-609.75	-70.86	-85.32	-19.28	-7.90	-
13.87													
	62	15	-0.21	11.11	6.27e-04	-78.12	0.0	13.28	25.38	-70.36	-15.83	11.11	-
2.28													
			-9.10	-5.96	-1.77e-05	0.0	25.0	13.28	-13.68	-70.36	-15.83	2.58	-
0.81													
							50.0	13.28	-52.74	-70.36	-15.83	-5.96	-
9.10													
	62	30	-3.05	-6.32	1.17e-03	-78.12	0.0	-271.27	21.06	-89.15	-28.99	-6.32	-
3.64													
			-16.33	-37.60	-3.83e-04	0.0	25.0	-271.27	-18.01	-89.15	-28.99	-21.96	-
5.11													
							50.0	-271.27	-57.07	-89.15	-28.99	-37.60	-
16.33													
	62	31	4.04	27.25	2.26e-04	-78.12	0.0	-1169.62	27.64	-15.71	5.07	21.13	0.11
			-1.89	21.13	3.14e-04	0.0	25.0	-1169.62	-11.42	-15.71	5.07	24.19	3.99
							50.0	-1169.62	-50.48	-15.71	5.07	27.25	-
1.89													
	62	41	6.17	2.93	-6.70e-04	-78.12	0.0	1293.76	102.15	-63.60	-18.94	2.93	-
24.33													
			-24.33	-13.97	-2.15e-04	0.0	25.0	1293.76	63.09	-63.60	-18.94	-5.52	-
4.20													
							50.0	1293.76	24.03	-63.60	-18.94	-13.97	6.17
	62	44	18.54	9.82	2.38e-03	-78.12	0.0	-4096.43	-58.79	-37.78	-4.44	9.82	
18.54													
			-29.31	2.60	1.64e-04	0.0	25.0	-4096.43	-97.85	-37.78	-4.44	6.21	-
0.50													
							50.0	-4096.43	-136.92	-37.78	-4.44	2.60	-
29.31													
	62	46	15.08	3.12	2.39e-03	-78.12	0.0	-3675.33	-53.07	-61.13	-14.96	3.12	
15.08													
			-31.35	-15.68	8.96e-05	0.0	25.0	-3675.33	-92.13	-61.13	-14.96	-6.28	-
3.25													
							50.0	-3675.33	-131.20	-61.13	-14.96	-15.68	-
31.35													
	62	62	-0.67	1.50	8.64e-04	-78.12	0.0	-403.74	23.73	-68.59	-19.47	1.50	-
2.01													
			-11.30	-19.29	-1.81e-04	0.0	25.0	-403.74	-15.34	-68.59	-19.47	-8.90	-
1.77													
							50.0	-403.74	-54.40	-68.59	-19.47	-19.29	-
11.30													
	62	63	3.69	13.87	3.90e-04	-78.12	0.0	-600.61	28.13	-36.42	-4.54	13.87	0.55
			-3.27	9.55	1.34e-04	0.0	25.0	-600.61	-10.93	-36.42	-4.54	11.71	3.52
							50.0	-600.61	-50.00	-36.42	-4.54	9.55	-
3.27													
	62	73	3.07	6.79	-1.42e-04	-78.12	0.0	1099.22	63.16	-59.21	-15.36	6.79	-
9.32													
			-9.32	-8.16	-1.09e-04	0.0	25.0	1099.22	24.10	-59.21	-15.36	-0.69	1.36
							50.0	1099.22	-14.96	-59.21	-15.36	-8.16	2.27
	62	76	7.86	8.58	1.40e-03	-78.12	0.0	-2103.56	-11.31	-45.80	-8.64	8.58	7.86
			-16.84	-1.58	6.11e-05	0.0	25.0	-2103.56	-50.37	-45.80	-8.64	3.50	0.39
							50.0	-2103.56	-89.44	-45.80	-8.64	-1.58	-
16.84													
	62	78	6.22	5.65	1.40e-03	-78.12	0.0	-1903.06	-8.88	-56.20	-13.28	5.65	6.22
			-17.90	-9.65	2.59e-05	0.0	25.0	-1903.06	-47.94	-56.20	-13.28	-2.00	-
0.96													
							50.0	-1903.06	-87.00	-56.20	-13.28	-9.65	-
17.90													
	62	89	2.54	8.11	5.47e-04	-78.12	0.0	-202.25	27.49	-53.01	-12.09	8.11	0.13
			-5.65	-4.57	-2.06e-05	0.0	25.0	-202.25	-11.57	-53.01	-12.09	1.77	2.12
							50.0	-202.25	-50.63	-53.01	-12.09	-4.57	-
5.65													
	62	90	1.14	7.58	6.47e-04	-78.12	0.0	-577.15	25.54	-52.38	-11.98	7.58	-
0.95													
			-7.70	-4.95	-2.47e-05	0.0	25.0	-577.15	-13.53	-52.38	-11.98	1.31	0.56
							50.0	-577.15	-52.59	-52.38	-11.98	-4.95	-
7.70													
	62	93	0.70	10.11	6.01e-04	-78.12	0.0	-58.56	26.09	-64.58	-14.58	10.11	-
1.47													
			-7.95	-5.50	-1.87e-05	0.0	25.0	-58.56	-12.98	-64.58	-14.58	2.31	0.17
							50.0	-58.56	-52.04	-64.58	-14.58	-5.50	-
7.95													
	62	94	-0.68	9.58	7.01e-04	-78.12	0.0	-433.46	24.13	-63.95	-14.47	9.58	-
2.55													
			-10.00	-5.87	-2.28e-05	0.0	25.0	-433.46	-14.93	-63.95	-14.47	1.85	-
1.39													
							50.0	-433.46	-53.99	-63.95	-14.47	-5.87	-
10.00													
	62	95	0.70	10.11	6.01e-04	-78.12	0.0	-58.56	26.09	-64.58	-14.58	10.11	-
1.47													
			-7.95	-5.50	-1.87e-05	0.0	25.0	-58.56	-12.98	-64.58	-14.58	2.31	0.17
							50.0	-58.56	-52.04	-64.58	-14.58	-5.50	-
7.95													
	62	96	-0.68	9.58	7.01e-04	-78.12	0.0	-433.46	24.13	-63.95	-14.47	9.58	-
2.55													
			-10.00	-5.87	-2.28e-05	0.0	25.0	-433.46	-14.93	-63.95	-14.47	1.85	-
1.39													
							50.0	-433.46	-53.99	-63.95	-14.47	-5.87	-
10.00													
	62	101	2.54	8.11	5.47e-04	-78.12	0.0	-202.25	27.49	-53.01	-12.09	8.11	0.13
			-5.65	-4.57	-2.06e-05	0.0	25.0	-202.25	-11.57	-53.01	-12.09	1.77	2.12
							50.0	-202.25	-50.63	-53.01	-12.09	-4.57	-
5.65													
	62	105	2.17	8.51	5.58e-04	-78.12	0.0	-173.51	27.21	-55.33	-12.59	8.51	-
0.19													
			-6.11	-4.76	-2.02e-05	0.0	25.0	-173.51	-11.85	-55.33	-12.59	1.88	1.73
							50.0	-173.51	-50.91	-55.33	-12.59	-4.76	-
6.11													

Viale Duca Alessandro n. 11 – 43123 Parma
Cell. 335 1403156 – E mail ing.concari@gmail.com
Sito web: studioaire.it – P.IVA 02561480340

62	106	1.05	8.08	6.38e-04	-78.12	0.0	-473.44	25.65	-54.82	-12.50	8.08	-	1.05
		-7.75	-5.06	-2.35e-05	0.0	25.0	-473.44	-13.42	-54.82	-12.50	1.51	0.48	
						50.0	-473.44	-52.48	-54.82	-12.50	-5.06	-	7.75
62	107	2.17	8.51	5.58e-04	-78.12	0.0	-173.51	27.21	-55.33	-12.59	8.51	-	0.19
		-6.11	-4.76	-2.02e-05	0.0	25.0	-173.51	-11.85	-55.33	-12.59	1.88	1.73	
						50.0	-173.51	-50.91	-55.33	-12.59	-4.76	-	6.11
62	108	1.05	8.08	6.38e-04	-78.12	0.0	-473.44	25.65	-54.82	-12.50	8.08	-	1.05
		-7.75	-5.06	-2.35e-05	0.0	25.0	-473.44	-13.42	-54.82	-12.50	1.51	0.48	
						50.0	-473.44	-52.48	-54.82	-12.50	-5.06	-	7.75
62	111	1.28	7.63	6.37e-04	-78.12	0.0	-539.66	25.73	-52.44	-11.99	7.63	-	0.84
		-7.49	-4.91	-2.43e-05	0.0	25.0	-539.66	-13.33	-52.44	-11.99	1.36	0.72	
						50.0	-539.66	-52.39	-52.44	-11.99	-4.91	-	7.49
62	113	2.54	8.11	5.47e-04	-78.12	0.0	-202.25	27.49	-53.01	-12.09	8.11	0.13	
		-5.65	-4.57	-2.06e-05	0.0	25.0	-202.25	-11.57	-53.01	-12.09	1.77	2.12	
						50.0	-202.25	-50.63	-53.01	-12.09	-4.57	-	5.65
62	114	1.42	7.68	6.27e-04	-78.12	0.0	-502.17	25.93	-52.51	-12.00	7.68	-	0.73
		-7.29	-4.87	-2.39e-05	0.0	25.0	-502.17	-13.14	-52.51	-12.00	1.41	0.87	
						50.0	-502.17	-52.20	-52.51	-12.00	-4.87	-	7.29
62	115	2.54	8.11	5.47e-04	-78.12	0.0	-202.25	27.49	-53.01	-12.09	8.11	0.13	
		-5.65	-4.57	-2.06e-05	0.0	25.0	-202.25	-11.57	-53.01	-12.09	1.77	2.12	
						50.0	-202.25	-50.63	-53.01	-12.09	-4.57	-	5.65
62	116	1.42	7.68	6.27e-04	-78.12	0.0	-502.17	25.93	-52.51	-12.00	7.68	-	0.73
		-7.29	-4.87	-2.39e-05	0.0	25.0	-502.17	-13.14	-52.51	-12.00	1.41	0.87	
						50.0	-502.17	-52.20	-52.51	-12.00	-4.87	-	7.29
63	5	-5.63	3.98	7.88e-04	-101.56	0.0	-882.29	45.66	-88.47	-19.91	3.98	-	10.77
		-13.31	-17.72	-2.43e-05	0.0	25.0	-882.29	-5.12	-88.47	-19.91	-6.87	-	5.69
						50.0	-882.29	-55.90	-88.47	-19.91	-17.72	-	13.31
63	6	-8.88	3.23	9.38e-04	-101.56	0.0	-1237.05	44.84	-86.53	-19.57	3.23	-	13.84
		-16.79	-17.86	-3.06e-05	0.0	25.0	-1237.05	-5.94	-86.53	-19.57	-7.31	-	8.97
						50.0	-1237.05	-56.73	-86.53	-19.57	-17.86	-	16.79
63	8	-8.88	3.23	9.38e-04	-101.56	0.0	-1237.05	44.84	-86.53	-19.57	3.23	-	13.84
		-16.79	-17.86	-3.06e-05	0.0	25.0	-1237.05	-5.94	-86.53	-19.57	-7.31	-	8.97
						50.0	-1237.05	-56.73	-86.53	-19.57	-17.86	-	16.79
63	9	-1.48	2.42	5.45e-04	-78.12	0.0	-581.66	36.02	-53.97	-12.26	2.42	-	5.63
		-7.14	-10.66	-2.09e-05	0.0	25.0	-581.66	-3.04	-53.97	-12.26	-4.12	-	1.50
						50.0	-581.66	-42.10	-53.97	-12.26	-10.66	-	7.14
63	31	-0.85	24.06	2.28e-04	-78.12	0.0	-607.57	26.48	-42.85	-5.35	24.06	-	1.87
		-12.45	16.33	3.14e-04	0.0	25.0	-607.57	-12.58	-42.85	-5.35	20.20	-	2.28
						50.0	-607.57	-51.65	-42.85	-5.35	16.33	-	12.45
63	35	8.09	21.37	2.25e-04	-78.12	0.0	-446.63	36.45	-37.97	-4.21	21.37	0.78	
		0.78	16.27	-1.13e-04	0.0	25.0	-446.63	-2.61	-37.97	-4.21	18.82	7.85	
						50.0	-446.63	-41.68	-37.97	-4.21	16.27	5.15	
63	38	-16.28	-18.15	1.17e-03	-78.12	0.0	-1397.52	35.61	-66.79	-19.78	-18.15	-	18.18
		-25.55	-38.15	-3.14e-05	0.0	25.0	-1397.52	-3.45	-66.79	-19.78	-28.15	-	16.98
						50.0	-1397.52	-42.52	-66.79	-19.78	-38.15	-	25.55
63	41	32.40	-4.07	-6.57e-04	-78.12	0.0	-608.02	88.95	-52.68	-11.02	-4.07	6.18	
		6.18	-15.95	-2.11e-04	0.0	25.0	-608.02	49.89	-52.68	-11.02	-10.01		24.17
						50.0	-608.02	10.83	-52.68	-11.02	-15.95		32.40
63	44	-29.25	5.85	2.36e-03	-78.12	0.0	-1996.90	-20.02	-46.62	-11.97	5.85	-	29.25
		-60.05	-5.74	1.59e-04	0.0	25.0	-1996.90	-59.08	-46.62	-11.97	0.05	-	39.77
						50.0	-1996.90	-98.15	-46.62	-11.97	-5.74	-	60.05
63	46	-31.29	-6.45	2.37e-03	-78.12	0.0	-2126.90	-9.78	-53.82	-15.88	-6.45	-	31.29
		-57.37	-21.52	8.29e-05	0.0	25.0	-2126.90	-48.84	-53.82	-15.88	-13.99	-	39.45
						50.0	-2126.90	-87.90	-53.82	-15.88	-21.52	-	57.37
63	63	-0.71	12.05	3.90e-04	-78.12	0.0	-544.53	32.05	-49.04	-9.19	12.05	-	3.26
		-8.69	1.32	1.33e-04	0.0	25.0	-544.53	-7.02	-49.04	-9.19	6.68	-	1.09

Viale Duca Alessandro n. 11 – 43123 Parma
Cell. 335 1403156 – E mail ing.concari@gmail.com
Sito web: studioaire.it – P.IVA 02561480340

							50.0	-544.53	-46.08	-49.04	-9.19	1.32	-	8.69
63	70	-9.12	-6.87	8.62e-04	-78.12	0.0	-1047.76	35.61	-58.99	-15.47	-6.87	-	12.08	
		-16.39	-22.80	-2.74e-05	0.0	25.0	-1047.76	-3.45	-58.99	-15.47	-14.84	-	9.36	
						50.0	-1047.76	-42.51	-58.99	-15.47	-22.80	-	16.39	
63	73	14.24	0.34	-1.36e-04	-78.12	0.0	-233.41	60.03	-55.92	-12.11	0.34	2.28		
		2.28	-12.94	-1.07e-04	0.0	25.0	-233.41	20.97	-55.92	-12.11	-6.30		12.69	
						50.0	-233.41	-18.09	-55.92	-12.11	-12.94		13.34	
63	76	-16.49	3.71	1.39e-03	-78.12	0.0	-1308.33	11.13	-49.95	-12.04	3.71	-	16.81	
		-31.33	-8.53	5.88e-05	0.0	25.0	-1308.33	-27.93	-49.95	-12.04	-2.41	-	19.18	
						50.0	-1308.33	-66.99	-49.95	-12.04	-8.53	-	31.33	
63	78	-17.23	-1.72	1.39e-03	-78.12	0.0	-1369.80	15.60	-53.23	-13.78	-1.72	-	17.86	
		-30.35	-15.50	2.27e-05	0.0	25.0	-1369.80	-23.46	-53.23	-13.78	-8.61	-	19.23	
						50.0	-1369.80	-62.52	-53.23	-13.78	-15.50	-	30.35	
63	79	13.77	5.76	-1.40e-04	-78.12	0.0	-171.94	55.57	-52.65	-10.37	5.76	3.34		
		3.34	-5.96	-7.11e-05	0.0	25.0	-171.94	16.50	-52.65	-10.37	-0.10		12.73	
						50.0	-171.94	-22.56	-52.65	-10.37	-5.96		12.37	
63	89	-1.48	2.42	5.45e-04	-78.12	0.0	-581.66	36.02	-53.97	-12.26	2.42	-	5.63	
		-7.14	-10.66	-2.09e-05	0.0	25.0	-581.66	-3.04	-53.97	-12.26	-4.12	-	1.50	
						50.0	-581.66	-42.10	-53.97	-12.26	-10.66	-	7.14	
63	93	-3.95	2.97	5.98e-04	-78.12	0.0	-665.75	35.25	-66.18	-14.90	2.97	-	7.93	
		-9.83	-13.24	-1.90e-05	0.0	25.0	-665.75	-3.82	-66.18	-14.90	-5.13	-	4.00	
						50.0	-665.75	-42.88	-66.18	-14.90	-13.24	-	9.83	
63	94	-6.12	2.48	6.98e-04	-78.12	0.0	-902.25	34.69	-64.88	-14.68	2.48	-	9.97	
		-12.15	-13.32	-2.32e-05	0.0	25.0	-902.25	-4.37	-64.88	-14.68	-5.42	-	6.18	
						50.0	-902.25	-43.43	-64.88	-14.68	-13.32	-	12.15	
63	96	-6.12	2.48	6.98e-04	-78.12	0.0	-902.25	34.69	-64.88	-14.68	2.48	-	9.97	
		-12.15	-13.32	-2.32e-05	0.0	25.0	-902.25	-4.37	-64.88	-14.68	-5.42	-	6.18	
						50.0	-902.25	-43.43	-64.88	-14.68	-13.32	-	12.15	
63	101	-1.48	2.42	5.45e-04	-78.12	0.0	-581.66	36.02	-53.97	-12.26	2.42	-	5.63	
		-7.14	-10.66	-2.09e-05	0.0	25.0	-581.66	-3.04	-53.97	-12.26	-4.12	-	1.50	
						50.0	-581.66	-42.10	-53.97	-12.26	-10.66	-	7.14	
63	105	-1.98	2.53	5.56e-04	-78.12	0.0	-598.48	35.87	-56.41	-12.79	2.53	-	6.09	
		-7.68	-11.18	-2.05e-05	0.0	25.0	-598.48	-3.19	-56.41	-12.79	-4.32	-	2.00	
						50.0	-598.48	-42.26	-56.41	-12.79	-11.18	-	7.68	
63	106	-3.71	2.13	6.35e-04	-78.12	0.0	-787.68	35.43	-55.38	-12.61	2.13	-	7.72	
		-9.53	-11.25	-2.39e-05	0.0	25.0	-787.68	-3.64	-55.38	-12.61	-4.56	-	3.74	
						50.0	-787.68	-42.70	-55.38	-12.61	-11.25	-	9.53	
63	108	-3.71	2.13	6.35e-04	-78.12	0.0	-787.68	35.43	-55.38	-12.61	2.13	-	7.72	
		-9.53	-11.25	-2.39e-05	0.0	25.0	-787.68	-3.64	-55.38	-12.61	-4.56	-	3.74	
						50.0	-787.68	-42.70	-55.38	-12.61	-11.25	-	9.53	
63	112	-3.43	1.97	6.35e-04	-78.12	0.0	-794.52	35.53	-52.81	-12.05	1.97	-	7.47	
		-9.22	-10.74	-2.47e-05	0.0	25.0	-794.52	-3.53	-52.81	-12.05	-4.38	-	3.46	
						50.0	-794.52	-42.60	-52.81	-12.05	-10.74	-	9.22	
63	113	-1.48	2.42	5.45e-04	-78.12	0.0	-581.66	36.02	-53.97	-12.26	2.42	-	5.63	
		-7.14	-10.66	-2.09e-05	0.0	25.0	-581.66	-3.04	-53.97	-12.26	-4.12	-	1.50	
						50.0	-581.66	-42.10	-53.97	-12.26	-10.66	-	7.14	
63	114	-3.21	2.02	6.25e-04	-78.12	0.0	-770.87	35.58	-52.94	-12.08	2.02	-	7.26	
		-8.99	-10.73	-2.42e-05	0.0	25.0	-770.87	-3.48	-52.94	-12.08	-4.35	-	3.25	
						50.0	-770.87	-42.54	-52.94	-12.08	-10.73	-	8.99	
63	116	-3.21	2.02	6.25e-04	-78.12	0.0	-770.87	35.58	-52.94	-12.08	2.02	-	7.26	

Viale Duca Alessandro n. 11 – 43123 Parma
Cell. 335 1403156 – E mail ing.concari@gmail.com
Sito web: studioaire.it – P.IVA 02561480340

		-8.99	-10.73	-2.42e-05	0.0	25.0	-770.87	-3.48	-52.94	-12.08	-4.35	-	3.25
						50.0	-770.87	-42.54	-52.94	-12.08	-10.73	-	8.99
64	1	2.54	-4.86	7.07e-04	-101.56	0.0	-1263.04	69.19	-78.92	-16.25	-4.86	-	9.25
		-9.25	-25.80	-2.94e-05	0.0	25.0	-1263.04	18.40	-78.92	-16.25	-15.33	1.70	
						50.0	-1263.04	-32.38	-78.92	-16.25	-25.80	-	0.04
64	5	1.41	-6.49	7.86e-04	-101.56	0.0	-1693.27	77.24	-101.26	-20.89	-6.49	-	13.29
		-13.29	-33.68	-2.72e-05	0.0	25.0	-1693.27	26.46	-101.26	-20.89	-20.09	-	0.32
						50.0	-1693.27	-24.33	-101.26	-20.89	-33.68	-	0.04
64	8	0.68	-6.78	9.34e-04	-101.56	0.0	-1836.04	84.16	-97.13	-20.03	-6.78	-	16.76
		-16.76	-32.47	-3.36e-05	0.0	25.0	-1836.04	33.38	-97.13	-20.03	-19.63	-	2.06
						50.0	-1836.04	-17.40	-97.13	-20.03	-32.47	-	0.05
64	9	1.95	-3.74	5.44e-04	-78.12	0.0	-971.57	53.22	-60.71	-12.50	-3.74	-	7.12
		-7.12	-19.84	-2.26e-05	0.0	25.0	-971.57	14.16	-60.71	-12.50	-11.79	1.31	
						50.0	-971.57	-24.91	-60.71	-12.50	-19.84	-	0.03
64	11	1.95	-3.74	5.44e-04	-78.12	0.0	-971.57	53.22	-60.71	-12.50	-3.74	-	7.12
		-7.12	-19.84	-2.26e-05	0.0	25.0	-971.57	14.16	-60.71	-12.50	-11.79	1.31	
						50.0	-971.57	-24.91	-60.71	-12.50	-19.84	-	0.03
64	31	0.62	20.57	2.43e-04	-78.12	0.0	-402.92	63.85	-77.71	-24.39	20.57	-	12.43
		-12.43	-4.26	3.09e-04	0.0	25.0	-402.92	24.78	-77.71	-24.39	8.16	-	1.35
						50.0	-402.92	-14.28	-77.71	-24.39	-4.26	-	0.02
64	34	-0.05	-28.28	1.14e-03	-78.12	0.0	-1737.05	93.48	-42.09	0.11	-28.28	-	27.27
		-27.27	-35.98	3.23e-05	0.0	25.0	-1737.05	54.41	-42.09	0.11	-32.13	-	8.78
						50.0	-1737.05	15.35	-42.09	0.11	-35.98	-	0.05
64	41	32.41	-8.73	-5.87e-04	-78.12	0.0	-2749.62	-25.82	-31.41	-7.19	-8.73		32.41
		-4.69e-03	-12.79	-2.01e-04	0.0	25.0	-2749.62	-64.88	-31.41	-7.19	-10.76		21.09
						50.0	-2749.62	-103.94	-31.41	-7.19	-12.79	-	4.69e-03
64	44	-0.09	0.20	2.28e-03	-78.12	0.0	330.04	158.86	-72.26	-14.17	0.20	-	59.99
		-59.99	-21.59	1.45e-04	0.0	25.0	330.04	119.79	-72.26	-14.17	-10.70	-	25.16
						50.0	330.04	80.73	-72.26	-14.17	-21.59	-	0.09
64	57	6.16	-13.99	4.11e-04	-78.12	0.0	-1701.33	34.12	-47.02	-6.71	-13.99	2.43	
		-0.03	-23.86	-1.75e-04	0.0	25.0	-1701.33	-4.94	-47.02	-6.71	-18.93	6.08	
						50.0	-1701.33	-44.00	-47.02	-6.71	-23.86	-	0.03
64	60	-0.04	6.21	8.34e-04	-78.12	0.0	-394.10	79.70	-69.98	-17.38	6.21	-	20.37
		-20.37	-14.54	1.23e-04	0.0	25.0	-394.10	40.64	-69.98	-17.38	-4.16	-	5.32
						50.0	-394.10	1.58	-69.98	-17.38	-14.54	-	0.04
64	63	1.48	7.05	3.97e-04	-78.12	0.0	-659.09	56.32	-68.38	-17.83	7.05	-	8.67
		-8.67	-12.97	1.30e-04	0.0	25.0	-659.09	17.26	-68.38	-17.83	-2.96	0.54	
						50.0	-659.09	-21.81	-68.38	-17.83	-12.97	-	0.03
64	66	0.04	-14.63	8.48e-04	-78.12	0.0	-1349.42	73.21	-51.20	-6.64	-14.63	-	17.12
		-17.12	-26.58	0.0	0.0	25.0	-1349.42	34.15	-51.20	-6.64	-20.60	-	3.70
						50.0	-1349.42	-4.92	-51.20	-6.64	-26.58	-	0.04
64	73	13.82	-5.71	-1.01e-04	-78.12	0.0	-1675.88	12.31	-52.49	-11.16	-5.71		13.35
		-0.01	-18.18	-1.04e-04	0.0	25.0	-1675.88	-26.75	-52.49	-11.16	-11.94		11.55
						50.0	-1675.88	-65.81	-52.49	-11.16	-18.18	-	0.01
64	76	-0.06	-2.07	1.35e-03	-78.12	0.0	-419.54	101.51	-64.51	-12.93	-2.07	-	31.29
		-31.29	-20.22	5.18e-05	0.0	25.0	-419.54	62.45	-64.51	-12.93	-11.15	-	10.79
						50.0	-419.54	23.38	-64.51	-12.93	-20.22	-	0.06
64	89	1.95	-3.74	5.44e-04	-78.12	0.0	-971.57	53.22	-60.71	-12.50	-3.74	-	7.12
		-7.12	-19.84	-2.26e-05	0.0	25.0	-971.57	14.16	-60.71	-12.50	-11.79	1.31	
						50.0	-971.57	-24.91	-60.71	-12.50	-19.84	-	0.03
64	91	1.95	-3.74	5.44e-04	-78.12	0.0	-971.57	53.22	-60.71	-12.50	-3.74	-	7.12
		-7.12	-19.84	-2.26e-05	0.0	25.0	-971.57	14.16	-60.71	-12.50	-11.79	1.31	
						50.0	-971.57	-24.91	-60.71	-12.50	-19.84	-	0.03

Viale Duca Alessandro n. 11 – 43123 Parma
Cell. 335 1403156 – E mail ing.concari@gmail.com
Sito web: studioaire.it – P.IVA 02561480340

64	93	1.19	-4.83	5.97e-04	-78.12	0.0	-1258.39	58.59	-75.60	-15.59	-4.83	-	9.81
		-9.81	-25.10	-2.12e-05	0.0	25.0	-1258.39	19.52	-75.60	-15.59	-14.96	-	0.04
						50.0	-1258.39	-19.54	-75.60	-15.59	-25.10	-	0.03
64	96	0.67	-5.02	6.95e-04	-78.12	0.0	-1353.57	63.20	-72.84	-15.02	-5.02	-	12.12
		-12.12	-24.30	-2.54e-05	0.0	25.0	-1353.57	24.14	-72.84	-15.02	-14.66	-	1.20
						50.0	-1353.57	-14.92	-72.84	-15.02	-24.30	-	0.04
64	101	1.95	-3.74	5.44e-04	-78.12	0.0	-971.57	53.22	-60.71	-12.50	-3.74	-	7.12
		-7.12	-19.84	-2.26e-05	0.0	25.0	-971.57	14.16	-60.71	-12.50	-11.79	1.31	
						50.0	-971.57	-24.91	-60.71	-12.50	-19.84	-	0.03
64	105	1.78	-3.96	5.54e-04	-78.12	0.0	-1028.94	54.29	-63.68	-13.12	-3.96	-	7.66
		-7.66	-20.89	-2.23e-05	0.0	25.0	-1028.94	15.23	-63.68	-13.12	-12.43	1.04	
						50.0	-1028.94	-23.83	-63.68	-13.12	-20.89	-	0.03
64	108	1.26	-4.11	6.33e-04	-78.12	0.0	-1105.08	57.98	-61.48	-12.66	-4.11	-	9.51
		-9.51	-20.25	-2.57e-05	0.0	25.0	-1105.08	18.92	-61.48	-12.66	-12.18	0.11	
						50.0	-1105.08	-20.14	-61.48	-12.66	-20.25	-	0.03
64	109	1.95	-3.74	5.44e-04	-78.12	0.0	-971.57	53.22	-60.71	-12.50	-3.74	-	7.12
		-7.12	-19.84	-2.26e-05	0.0	25.0	-971.57	14.16	-60.71	-12.50	-11.79	1.31	
						50.0	-971.57	-24.91	-60.71	-12.50	-19.84	-	0.03
64	113	1.95	-3.74	5.44e-04	-78.12	0.0	-971.57	53.22	-60.71	-12.50	-3.74	-	7.12
		-7.12	-19.84	-2.26e-05	0.0	25.0	-971.57	14.16	-60.71	-12.50	-11.79	1.31	
						50.0	-971.57	-24.91	-60.71	-12.50	-19.84	-	0.03
64	115	1.95	-3.74	5.44e-04	-78.12	0.0	-971.57	53.22	-60.71	-12.50	-3.74	-	7.12
		-7.12	-19.84	-2.26e-05	0.0	25.0	-971.57	14.16	-60.71	-12.50	-11.79	1.31	
						50.0	-971.57	-24.91	-60.71	-12.50	-19.84	-	0.03
64	116	1.39	-3.89	6.23e-04	-78.12	0.0	-1047.71	56.91	-58.50	-12.05	-3.89	-	8.97
		-8.97	-19.20	-2.60e-05	0.0	25.0	-1047.71	17.85	-58.50	-12.05	-11.54	0.38	
						50.0	-1047.71	-21.21	-58.50	-12.05	-19.20	-	0.03
65	2	17.67	-8.85	8.10e-04	-101.56	0.0	-2781.68	84.62	32.81	6.11	-18.05	0.04	
		0.04	-18.05	-4.88e-05	0.0	25.0	-2781.68	33.84	32.81	6.11	-13.45		14.86
						50.0	-2781.68	-16.94	32.81	6.11	-8.85		16.98
65	5	12.94	-7.68	7.29e-04	-101.56	0.0	-3284.60	72.42	72.17	14.21	-28.08	0.04	
		0.04	-28.08	-4.63e-05	0.0	25.0	-3284.60	21.64	72.17	14.21	-17.88		11.80
						50.0	-3284.60	-29.14	72.17	14.21	-7.68		10.87
65	8	15.96	-9.26	8.76e-04	-101.56	0.0	-3472.60	80.39	59.02	11.47	-25.84	0.05	
		0.05	-25.84	-5.16e-05	0.0	25.0	-3472.60	29.61	59.02	11.47	-17.55		13.81
						50.0	-3472.60	-21.17	59.02	11.47	-9.26		14.87
65	9	11.16	-5.59	5.09e-04	-78.12	0.0	-1995.14	58.96	35.35	6.81	-15.60	0.03	
		0.03	-15.60	-3.35e-05	0.0	25.0	-1995.14	19.90	35.35	6.81	-10.60	9.89	
						50.0	-1995.14	-19.16	35.35	6.81	-5.59	9.99	
65	11	11.16	-5.59	5.09e-04	-78.12	0.0	-1995.14	58.96	35.35	6.81	-15.60	0.03	
		0.03	-15.60	-3.35e-05	0.0	25.0	-1995.14	19.90	35.35	6.81	-10.60	9.89	
						50.0	-1995.14	-19.16	35.35	6.81	-5.59	9.99	
65	25	0.11	-25.71	2.32e-04	-78.12	0.0	-3606.84	5.29	4.25	-4.66	-27.94	0.02	
		-16.85	-27.94	-3.50e-04	0.0	25.0	-3606.84	-33.77	4.25	-4.66	-26.82	-	3.53
						50.0	-3606.84	-72.84	4.25	-4.66	-25.71	-	16.85
65	28	43.88	11.14	1.08e-03	-78.12	0.0	-938.92	126.71	40.71	12.83	0.73	0.05	
		0.05	0.73	2.57e-04	0.0	25.0	-938.92	87.64	40.71	12.83	5.93		26.85
						50.0	-938.92	48.58	40.71	12.83	11.14		43.88
65	36	25.08	15.12	1.07e-03	-78.12	0.0	-1103.54	89.10	40.90	13.68	2.24	0.05	
		0.05	2.24	-7.75e-05	0.0	25.0	-1103.54	50.04	40.90	13.68	8.68		17.45
						50.0	-1103.54	10.98	40.90	13.68	15.12		25.08
65	38	40.56	-26.47	1.06e-03	-78.12	0.0	-2881.05	120.08	27.95	2.77	-35.90	0.05	
		0.05	-35.90	-4.91e-05	0.0	25.0	-2881.05	81.01	27.95	2.77	-31.19		25.19
						50.0	-2881.05	41.95	27.95	2.77	-26.47		40.56
65	41	2.47e-03	-5.33	-5.69e-04	-78.13	0.0	-3601.82	-67.04	-33.48	-14.20	-5.33		2.47e-03
		-53.02	-19.13	-1.47e-04	0.0	25.0	-3601.82	-106.10	-33.48	-14.20	-12.23	-	21.63
						50.0	-3601.82	-145.16	-33.48	-14.20	-19.13	-	53.02
65	44	90.34	1.69	2.20e-03	-78.12	0.0	-981.16	219.56	49.64	16.54	-16.23	0.09	
		0.09	-16.23	7.41e-05	0.0	25.0	-981.16	180.50	49.64	16.54	-7.27		50.10
						50.0	-981.16	141.43	49.64	16.54	1.69		

Viale Duca Alessandro n. 11 – 43123 Parma
Cell. 335 1403156 – E mail ing.concari@gmail.com
Sito web: studioaire.it – P.IVA 02561480340

90.34													
65	57	3.76	-14.34	3.74e-04	-78.12	0.0	-2718.65	34.16	23.01	2.01	-21.33	0.02	
		-2.42	-21.33	-1.75e-04	0.0	25.0	-2718.65	-4.90	23.01	2.01	-17.84	3.69	
						50.0	-2718.65	-43.97	23.01	2.01	-14.34	-	
2.42													
65	60	26.65	1.47	8.02e-04	-78.12	0.0	-1472.15	92.26	33.68	8.69	-7.49	0.04	
		0.04	-7.49	1.02e-04	0.0	25.0	-1472.15	53.20	33.68	8.69	-3.01		
18.23													
						50.0	-1472.15	14.14	33.68	8.69	1.47		
26.65													
65	68	18.37	3.22	8.01e-04	-78.12	0.0	-1544.33	75.71	33.79	9.07	-6.83	0.04	
		0.04	-6.83	-4.46e-05	0.0	25.0	-1544.33	36.65	33.79	9.07	-1.81		
14.09													
						50.0	-1544.33	-2.41	33.79	9.07	3.22		
18.37													
65	70	24.68	-15.26	7.94e-04	-78.12	0.0	-2438.53	88.33	28.04	4.17	-23.86	0.04	
		0.04	-23.86	-4.19e-05	0.0	25.0	-2438.53	49.27	28.04	4.17	-19.56		
17.24													
						50.0	-2438.53	10.21	28.04	4.17	-15.26		
24.68													
65	73	8.20e-03	-10.07	-1.12e-04	-78.12	0.0	-2623.01	-6.04	19.00	0.42	-13.66		
8.20e-03													
		-22.53	-13.66	-8.75e-05	0.0	25.0	-2623.01	-45.10	19.00	0.42	-11.87	-	
6.38													
						50.0	-2623.01	-84.16	19.00	0.42	-10.07	-	
22.53													
65	76	46.76	-2.81	1.29e-03	-78.12	0.0	-1567.79	132.46	37.69	10.28	-15.16	0.06	
		0.06	-15.16	1.49e-05	0.0	25.0	-1567.79	93.40	37.69	10.28	-8.98		
28.29													
						50.0	-1567.79	54.33	37.69	10.28	-2.81		
46.76													
65	89	11.16	-5.59	5.09e-04	-78.12	0.0	-1995.14	58.96	35.35	6.81	-15.60	0.03	
		0.03	-15.60	-3.35e-05	0.0	25.0	-1995.14	19.90	35.35	6.81	-10.60	9.89	
						50.0	-1995.14	-19.16	35.35	6.81	-5.59	9.99	
65	90	13.26	-6.65	6.08e-04	-78.12	0.0	-2120.47	64.27	26.59	4.98	-14.11	0.03	
		0.03	-14.11	-3.70e-05	0.0	25.0	-2120.47	25.21	26.59	4.98	-10.38		
11.22													
						50.0	-2120.47	-13.85	26.59	4.98	-6.65		
12.65													
65	91	11.16	-5.59	5.09e-04	-78.12	0.0	-1995.14	58.96	35.35	6.81	-15.60	0.03	
		0.03	-15.60	-3.35e-05	0.0	25.0	-1995.14	19.90	35.35	6.81	-10.60	9.89	
						50.0	-1995.14	-19.16	35.35	6.81	-5.59	9.99	
65	93	10.10	-5.87	5.54e-04	-78.12	0.0	-2455.75	56.14	52.83	10.38	-20.80	0.03	
		0.03	-20.80	-3.54e-05	0.0	25.0	-2455.75	17.08	52.83	10.38	-13.33	9.19	
						50.0	-2455.75	-21.98	52.83	10.38	-5.87	8.58	
65	96	12.12	-6.92	6.52e-04	-78.12	0.0	-2581.08	61.45	44.06	8.55	-19.31	0.04	
		0.04	-19.31	-3.88e-05	0.0	25.0	-2581.08	22.39	44.06	8.55	-13.11		
10.52													
						50.0	-2581.08	-16.67	44.06	8.55	-6.92		
11.24													
65	101	11.16	-5.59	5.09e-04	-78.12	0.0	-1995.14	58.96	35.35	6.81	-15.60	0.03	
		0.03	-15.60	-3.35e-05	0.0	25.0	-1995.14	19.90	35.35	6.81	-10.60	9.89	
						50.0	-1995.14	-19.16	35.35	6.81	-5.59	9.99	
65	105	10.95	-5.65	5.18e-04	-78.12	0.0	-2087.26	58.40	38.85	7.53	-16.64	0.03	
		0.03	-16.64	-3.39e-05	0.0	25.0	-2087.26	19.33	38.85	7.53	-11.14	9.75	
						50.0	-2087.26	-19.73	38.85	7.53	-5.65	9.70	
65	108	12.60	-6.49	5.97e-04	-78.12	0.0	-2187.53	62.65	31.84	6.06	-15.45	0.03	
		0.03	-15.45	-3.67e-05	0.0	25.0	-2187.53	23.58	31.84	6.06	-10.97		
10.82													
						50.0	-2187.53	-15.48	31.84	6.06	-6.49		
11.84													
65	109	11.16	-5.59	5.09e-04	-78.12	0.0	-1995.14	58.96	35.35	6.81	-15.60	0.03	
		0.03	-15.60	-3.35e-05	0.0	25.0	-1995.14	19.90	35.35	6.81	-10.60	9.89	
						50.0	-1995.14	-19.16	35.35	6.81	-5.59	9.99	
65	111	13.04	-6.54	5.98e-04	-78.12	0.0	-2107.94	63.74	27.47	5.17	-14.26	0.03	
		0.03	-14.26	-3.66e-05	0.0	25.0	-2107.94	24.68	27.47	5.17	-10.40		
11.09													
						50.0	-2107.94	-14.38	27.47	5.17	-6.54		
12.38													
65	113	11.16	-5.59	5.09e-04	-78.12	0.0	-1995.14	58.96	35.35	6.81	-15.60	0.03	
		0.03	-15.60	-3.35e-05	0.0	25.0	-1995.14	19.90	35.35	6.81	-10.60	9.89	
						50.0	-1995.14	-19.16	35.35	6.81	-5.59	9.99	
65	114	12.83	-6.44	5.88e-04	-78.12	0.0	-2095.40	63.21	28.34	5.35	-14.41	0.03	
		0.03	-14.41	-3.63e-05	0.0	25.0	-2095.40	24.15	28.34	5.35	-10.42		
10.96													
						50.0	-2095.40	-14.91	28.34	5.35	-6.44		
12.12													
65	115	11.16	-5.59	5.09e-04	-78.12	0.0	-1995.14	58.96	35.35	6.81	-15.60	0.03	
		0.03	-15.60	-3.35e-05	0.0	25.0	-1995.14	19.90	35.35	6.81	-10.60	9.89	
						50.0	-1995.14	-19.16	35.35	6.81	-5.59	9.99	
65	116	12.83	-6.44	5.88e-04	-78.12	0.0	-2095.40	63.21	28.34	5.35	-14.41	0.03	
		0.03	-14.41	-3.63e-05	0.0	25.0	-2095.40	24.15	28.34	5.35	-10.42		
10.96													
						50.0	-2095.40	-14.91	28.34	5.35	-6.44		
12.12													
66	2	17.38	-11.02	8.19e-04	-101.56	0.0	112.83	12.28	24.14	9.06	-12.85		
17.01													
		-2.23	-12.85	-5.15e-05	0.0	25.0	112.83	-38.50	24.14	9.06	-11.93		
13.74													
						50.0	112.83	-89.28	24.14	9.06	-11.02	-	
2.23													
66	6	15.06	-8.26	8.86e-04	-101.56	0.0	-104.55	8.38	46.45	13.75	-15.95		
14.90													
		-6.28	-15.95	-5.47e-05	0.0	25.0	-104.55	-42.40	46.45	13.75	-12.10		
10.66													
						50.0	-104.55	-93.18	46.45	13.75	-8.26	-	
6.28													
66	7	11.46	-4.06	7.37e-04	-101.56	0.0	-299.83	15.32	57.83	15.41	-15.55		

Viale Duca Alessandro n. 11 – 43123 Parma
Cell. 335 1403156 – E mail ing.concari@gmail.com
Sito web: studioaire.it – P.IVA 02561480340

												10.90	
		-6.82	-15.55	-4.92e-05	0.0	25.0	-299.83	-35.46	57.83	15.41	-9.81	8.39	
						50.0	-299.83	-86.25	57.83	15.41	-4.06		- 6.82
66	10	14.19	-9.45	6.64e-04	-78.12	0.0	131.86	7.85	15.94	6.59	-9.97		14.01
		-1.59	-9.97	-4.09e-05	0.0	25.0	131.86	-31.22	15.94	6.59	-9.71		11.09
						50.0	131.86	-70.28	15.94	6.59	-9.45		- 1.59
66	13	8.27	-2.49	5.82e-04	-78.12	0.0	-280.80	10.88	49.63	12.94	-12.68	7.90	
		-6.18	-12.68	-3.86e-05	0.0	25.0	-280.80	-28.18	49.63	12.94	-7.58	5.74	
						50.0	-280.80	-67.24	49.63	12.94	-2.49		- 6.18
66	34	43.24	-20.03	1.11e-03	-78.12	0.0	1001.32	-89.93	57.60	24.37	-40.36		43.24
		-21.71	-40.36	4.27e-06	0.0	25.0	1001.32	-128.99	57.60	24.37	-30.20		15.65
						50.0	1001.32	-168.05	57.60	24.37	-20.03		- 21.71
66	35	17.32	20.20	2.15e-04	-78.12	0.0	-819.63	105.06	-25.10	-11.23	20.20		- 16.16
		-16.16	1.27	-1.02e-04	0.0	25.0	-819.63	66.00	-25.10	-11.23	10.73	5.46	
						50.0	-819.63	26.94	-25.10	-11.23	1.27		17.32
66	41	23.24	-13.38	-6.87e-04	-78.12	0.0	-3022.89	183.98	-20.28	-1.79	-13.38		- 53.02
		-53.02	-26.47	-1.98e-04	0.0	25.0	-3022.89	144.92	-20.28	-1.79	-19.93		- 10.00
						50.0	-3022.89	105.86	-20.28	-1.79	-26.47		23.24
66	44	90.39	-1.39	2.33e-03	-78.13	0.0	3780.19	-182.34	27.59	11.50	-7.17		90.39
		-24.08	-7.17	1.20e-04	0.0	25.0	3780.19	-221.40	27.59	11.50	-4.28		38.04
						50.0	3780.19	-260.46	27.59	11.50	-1.39		- 24.08
66	66	25.85	-13.03	8.21e-04	-78.12	0.0	463.89	-33.34	37.23	14.84	-23.25		25.85
		-10.56	-23.25	-1.97e-05	0.0	25.0	463.89	-72.40	37.23	14.84	-18.14		12.53
						50.0	463.89	-111.47	37.23	14.84	-13.03		- 10.56
66	67	8.44	3.68	3.69e-04	-78.12	0.0	-382.44	55.51	5.27	-0.12	3.68		- 1.58
		-1.58	-1.94	-5.70e-05	0.0	25.0	-382.44	16.44	5.27	-0.12	0.87	7.54	
						50.0	-382.44	-22.62	5.27	-0.12	-1.94	6.88	
66	73	7.71	-10.17	-1.67e-04	-78.12	0.0	-1623.20	96.17	18.53	5.53	-10.98		- 22.52
		-22.52	-10.98	-1.10e-04	0.0	25.0	-1623.20	57.10	18.53	5.53	-10.58		- 2.52
						50.0	-1623.20	18.04	18.53	5.53	-10.17	7.71	
66	76	46.80	-4.80	1.36e-03	-78.13	0.0	1704.65	-74.00	23.97	9.19	-8.60		46.80
		-11.39	-8.60	3.38e-05	0.0	25.0	1704.65	-113.07	23.97	9.19	-6.70		22.59
						50.0	1704.65	-152.13	23.97	9.19	-4.80		- 11.39
66	90	13.00	-8.05	6.15e-04	-78.12	0.0	66.76	10.16	19.73	7.14	-9.84		12.67
		-1.77	-9.84	-3.91e-05	0.0	25.0	66.76	-28.90	19.73	7.14	-8.94		10.33
						50.0	66.76	-67.97	19.73	7.14	-8.05		- 1.77
66	93	9.06	-3.41	5.60e-04	-78.12	0.0	-208.34	12.18	42.19	11.37	-11.65	8.60	
		-4.83	-11.65	-3.76e-05	0.0	25.0	-208.34	-26.88	42.19	11.37	-7.53	6.77	
						50.0	-208.34	-65.94	42.19	11.37	-3.41		- 4.83
66	94	11.44	-6.21	6.59e-04	-78.12	0.0	-78.15	7.56	34.61	10.27	-11.91		11.27
		-4.47	-11.91	-4.12e-05	0.0	25.0	-78.15	-31.50	34.61	10.27	-9.06	8.28	
						50.0	-78.15	-70.57	34.61	10.27	-6.21		- 4.47
66	95	9.06	-3.41	5.60e-04	-78.12	0.0	-208.34	12.18	42.19	11.37	-11.65	8.60	
		-4.83	-11.65	-3.76e-05	0.0	25.0	-208.34	-26.88	42.19	11.37	-7.53	6.77	
						50.0	-208.34	-65.94	42.19	11.37	-3.41		- 4.83
66	105	10.38	-4.88	5.24e-04	-78.12	0.0	-92.41	14.26	30.29	8.87	-9.99	9.72	
		-2.67	-9.99	-3.58e-05	0.0	25.0	-92.41	-24.80	30.29	8.87	-7.44	8.41	
						50.0	-92.41	-63.86	30.29	8.87	-4.88		- 2.67
66	106	12.21	-7.12	6.04e-04	-78.12	0.0	11.74	10.56	24.23	7.98	-10.20		11.86
		-2.38	-10.20	-3.88e-05	0.0	25.0	11.74	-28.50	24.23	7.98	-8.66	9.62	
						50.0	11.74	-67.56	24.23	7.98	-7.12		- 2.38
66	107	10.38	-4.88	5.24e-04	-78.12	0.0	-92.41	14.26	30.29	8.87	-9.99	9.72	
		-2.67	-9.99	-3.58e-05	0.0	25.0	-92.41	-24.80	30.29	8.87	-7.44	8.41	
						50.0	-92.41	-63.86	30.29	8.87	-4.88		- 2.67
66	111	12.77	-7.77	6.05e-04	-78.12	0.0	53.74	10.62	20.49	7.25	-9.82		12.41
		-1.80	-9.82	-3.87e-05	0.0	25.0	53.74	-28.44	20.49	7.25	-8.79		10.18
						50.0	53.74	-67.51	20.49	7.25	-7.77		- 1.80
66	113	10.71	-5.25	5.16e-04	-78.12	0.0	-63.43	14.78	27.32	8.24	-9.58		10.01

Viale Duca Alessandro n. 11 – 43123 Parma
Cell. 335 1403156 – E mail ing.concari@gmail.com
Sito web: studioaire.it – P.IVA 02561480340

		-2.13	-9.58	-3.54e-05	0.0	25.0	-63.43	-24.28	27.32	8.24	-7.41	8.82	
						50.0	-63.43	-63.35	27.32	8.24	-5.25	-	2.13
66	114	12.53	-7.49	5.95e-04	-78.12	0.0	40.72	11.08	21.25	7.36	-9.79		12.14
		-1.84	-9.79	-3.83e-05	0.0	25.0	40.72	-27.98	21.25	7.36	-8.64		10.03
						50.0	40.72	-67.04	21.25	7.36	-7.49	-	1.84
66	115	10.71	-5.25	5.16e-04	-78.12	0.0	-63.43	14.78	27.32	8.24	-9.58		10.01
		-2.13	-9.58	-3.54e-05	0.0	25.0	-63.43	-24.28	27.32	8.24	-7.41	8.82	
						50.0	-63.43	-63.35	27.32	8.24	-5.25	-	2.13
67	2	5.26	-17.19	8.13e-04	-101.56	0.0	2073.04	55.06	16.33	15.04	-17.19	-	2.20
		-2.20	-24.98	-5.51e-05	0.0	25.0	2073.04	4.28	16.33	15.04	-21.09	5.23	
						50.0	2073.04	-46.50	16.33	15.04	-24.98	-	0.04
67	4	5.26	-17.19	8.13e-04	-101.56	0.0	2073.04	55.06	16.33	15.04	-17.19	-	2.20
		-2.20	-24.98	-5.51e-05	0.0	25.0	2073.04	4.28	16.33	15.04	-21.09	5.23	
						50.0	2073.04	-46.50	16.33	15.04	-24.98	-	0.04
67	7	3.38	-8.92	7.30e-04	-101.56	0.0	1833.98	64.26	51.75	19.28	-13.51	-	6.79
		-6.79	-13.51	-5.15e-05	0.0	25.0	1833.98	13.48	51.75	19.28	-11.22	2.93	
						50.0	1833.98	-37.30	51.75	19.28	-8.92	-	0.04
67	8	3.58	-17.02	8.78e-04	-101.56	0.0	2265.50	63.15	39.49	19.21	-17.02	-	6.25
		-6.25	-18.11	-5.80e-05	0.0	25.0	2265.50	12.37	39.49	19.21	-17.57	3.20	
						50.0	2265.50	-38.41	39.49	19.21	-18.11	-	0.05
67	9	3.87	-10.52	5.11e-04	-78.12	0.0	1262.72	43.20	21.99	11.62	-10.52	-	2.11
		-2.11	-12.15	-3.74e-05	0.0	25.0	1262.72	4.14	21.99	11.62	-11.34	3.81	
						50.0	1262.72	-34.92	21.99	11.62	-12.15	-	0.03
67	13	2.25	-5.28	5.76e-04	-78.12	0.0	1455.17	51.30	45.15	15.79	-10.35	-	6.16
		-6.16	-10.35	-4.03e-05	0.0	25.0	1455.17	12.24	45.15	15.79	-7.81	1.79	
						50.0	1455.17	-26.83	45.15	15.79	-5.28	-	0.03
67	36	5.73	14.44	1.12e-03	-78.12	0.0	2558.41	35.58	-47.42	-15.63	14.44	1.68	
		-0.05	-22.04	-5.28e-05	0.0	25.0	2558.41	-3.48	-47.42	-15.63	-3.80	5.70	
						50.0	2558.41	-42.54	-47.42	-15.63	-22.04	-	0.05
67	46	-0.09	-7.12	2.34e-03	-78.12	0.0	8019.18	98.84	55.19	26.09	-23.03	-	29.98
		-29.98	-23.03	5.38e-05	0.0	25.0	8019.18	59.77	55.19	26.09	-15.08	-	10.15
						50.0	8019.18	20.71	55.19	26.09	-7.12	-	0.09
67	47	29.21	-12.61	-7.03e-04	-78.12	0.0	-3729.87	-19.40	-62.58	-2.98	-12.61		29.21
		-2.66e-03	-55.73	-1.40e-04	0.0	25.0	-3729.87	-58.47	-62.58	-2.98	-34.17		19.49
						50.0	-3729.87	-97.53	-62.58	-2.98	-55.73	-	2.66e-03
67	51	26.00	-14.64	-7.07e-04	-78.12	0.0	-2979.51	-12.99	-60.35	-1.18	-14.64		26.00
		-2.54e-03	-58.86	2.04e-04	0.0	25.0	-2979.51	-52.05	-60.35	-1.18	-36.75		17.88
						50.0	-2979.51	-91.11	-60.35	-1.18	-58.86	-	2.54e-03
67	70	1.07	-12.25	8.18e-04	-78.12	0.0	2596.67	59.48	48.57	24.99	-24.86	-	10.26
		-10.26	-24.86	-5.46e-05	0.0	25.0	2596.67	20.41	48.57	24.99	-18.56	-	0.26
						50.0	2596.67	-18.65	48.57	24.99	-12.25	-	0.04
67	71	8.74	0.07	3.63e-04	-78.12	0.0	389.05	25.75	-17.67	-1.82	0.07	6.62	
		-0.03	-21.85	-2.71e-05	0.0	25.0	389.05	-13.31	-17.67	-1.82	-10.89	8.18	
						50.0	389.05	-52.37	-17.67	-1.82	-21.85	-	0.03
67	78	0.31	-12.67	1.36e-03	-78.12	0.0	4369.28	67.32	32.94	17.98	-17.11	-	14.19
		-14.19	-17.11	0.0	0.0	25.0	4369.28	28.26	32.94	17.98	-14.89	-	2.24
						50.0	4369.28	-10.80	32.94	17.98	-12.67	-	0.06
67	79	11.58	-7.69	-1.77e-04	-78.12	0.0	-1383.57	17.91	-2.04	5.19	-7.69		10.56
		-8.33e-03	-21.43	-8.23e-05	0.0	25.0	-1383.57	-21.16	-2.04	5.19	-14.56		10.16
						50.0	-1383.57	-60.22	-2.04	5.19	-21.43	-	8.33e-03
67	89	3.87	-10.52	5.11e-04	-78.12	0.0	1262.72	43.20	21.99	11.62	-10.52	-	2.11
		-2.11	-12.15	-3.74e-05	0.0	25.0	1262.72	4.14	21.99	11.62	-11.34	3.81	
						50.0	1262.72	-34.92	21.99	11.62	-12.15	-	0.03
67	90	4.02	-12.87	6.10e-04	-78.12	0.0	1550.39	42.47	13.82	11.58	-12.87	-	1.75
		-1.75	-18.27	-4.17e-05	0.0	25.0	1550.39	3.40	13.82	11.58	-15.57	3.99	
						50.0	1550.39	-35.66	13.82	11.58	-18.27	-	0.03

Viale Duca Alessandro n. 11 – 43123 Parma
Cell. 335 1403156 – E mail ing.concari@gmail.com
Sito web: studioaire.it – P.IVA 02561480340

	67	92	4.02	-12.87	6.10e-04	-78.12	0.0	1550.39	42.47	13.82	11.58	-12.87	-	1.75
			-1.75	-18.27	-4.17e-05	0.0	25.0	1550.39	3.40	13.82	11.58	-15.57	3.99	
							50.0	1550.39	-35.66	13.82	11.58	-18.27	-	0.03
	67	93	2.76	-7.57	5.55e-04	-78.12	0.0	1391.02	48.60	37.43	14.40	-10.41	-	4.81
			-4.81	-10.41	-3.93e-05	0.0	25.0	1391.02	9.54	37.43	14.40	-8.99	2.46	
							50.0	1391.02	-29.52	37.43	14.40	-7.57	-	0.03
	67	95	2.76	-7.57	5.55e-04	-78.12	0.0	1391.02	48.60	37.43	14.40	-10.41	-	4.81
			-4.81	-10.41	-3.93e-05	0.0	25.0	1391.02	9.54	37.43	14.40	-8.99	2.46	
							50.0	1391.02	-29.52	37.43	14.40	-7.57	-	0.03
	67	96	2.89	-12.75	6.53e-04	-78.12	0.0	1678.69	47.86	29.26	14.36	-12.75	-	4.45
			-4.45	-13.69	-4.36e-05	0.0	25.0	1678.69	8.80	29.26	14.36	-13.22	2.64	
							50.0	1678.69	-30.26	29.26	14.36	-13.69	-	0.04
	67	101	3.87	-10.52	5.11e-04	-78.12	0.0	1262.72	43.20	21.99	11.62	-10.52	-	2.11
			-2.11	-12.15	-3.74e-05	0.0	25.0	1262.72	4.14	21.99	11.62	-11.34	3.81	
							50.0	1262.72	-34.92	21.99	11.62	-12.15	-	0.03
	67	107	3.63	-10.50	5.20e-04	-78.12	0.0	1288.38	44.28	25.07	12.18	-10.50	-	2.65
			-2.65	-11.23	-3.78e-05	0.0	25.0	1288.38	5.22	25.07	12.18	-10.87	3.54	
							50.0	1288.38	-33.84	25.07	12.18	-11.23	-	0.03
	67	111	4.01	-12.63	6.00e-04	-78.12	0.0	1521.62	42.54	14.63	11.58	-12.63	-	1.78
			-1.78	-17.66	-4.13e-05	0.0	25.0	1521.62	3.48	14.63	11.58	-15.15	3.98	
							50.0	1521.62	-35.58	14.63	11.58	-17.66	-	0.03
	67	112	4.01	-12.63	6.00e-04	-78.12	0.0	1521.62	42.54	14.63	11.58	-12.63	-	1.78
			-1.78	-17.66	-4.13e-05	0.0	25.0	1521.62	3.48	14.63	11.58	-15.15	3.98	
							50.0	1521.62	-35.58	14.63	11.58	-17.66	-	0.03
	67	113	3.87	-10.52	5.11e-04	-78.12	0.0	1262.72	43.20	21.99	11.62	-10.52	-	2.11
			-2.11	-12.15	-3.74e-05	0.0	25.0	1262.72	4.14	21.99	11.62	-11.34	3.81	
							50.0	1262.72	-34.92	21.99	11.62	-12.15	-	0.03
	67	114	3.99	-12.40	5.90e-04	-78.12	0.0	1492.86	42.61	15.45	11.59	-12.40	-	1.82
			-1.82	-17.05	-4.09e-05	0.0	25.0	1492.86	3.55	15.45	11.59	-14.72	3.96	
							50.0	1492.86	-35.51	15.45	11.59	-17.05	-	0.03
	67	115	3.87	-10.52	5.11e-04	-78.12	0.0	1262.72	43.20	21.99	11.62	-10.52	-	2.11
			-2.11	-12.15	-3.74e-05	0.0	25.0	1262.72	4.14	21.99	11.62	-11.34	3.81	
							50.0	1262.72	-34.92	21.99	11.62	-12.15	-	0.03
	67	116	3.99	-12.40	5.90e-04	-78.12	0.0	1492.86	42.61	15.45	11.59	-12.40	-	1.82
			-1.82	-17.05	-4.09e-05	0.0	25.0	1492.86	3.55	15.45	11.59	-14.72	3.96	
							50.0	1492.86	-35.51	15.45	11.59	-17.05	-	0.03

Trave	M3 mx/mn	M2 mx/mn	D 2 / D 3	Q 2 / Q 3	N	V 2	V 3	T
	-143.15	-123.29	-1.08e-03	-2754.71	-6776.71	-1482.20	-481.28	-117.38
	155.52	108.80	2.87e-03	0.0	8019.18	1607.42	485.81	122.23

Viale Duca Alessandro n. 11 – 43123 Parma
Cell. 335 1403156 – E mail ing.concari@gmail.com
Sito web: studioaire.it – P.IVA 02561480340

RISULTATI ELEMENTI DI FONDAZIONE

MODELLO 2 SCALA ANTINCENDIO

Nodo (G)Pt 1/12	Pt 2/13	Pt 3...	Pt 4...							
daN/cm2	daN/cm2	daN/cm2	daN/cm2	daN/cm2	daN/cm2	daN/cm2	daN/cm2	daN/cm2	daN/cm2	daN/cm2
2	-0.33	-0.31	-0.25	-0.24	-0.24	-0.20	-0.21			
6	-0.27	-0.28	-0.22	-0.21	-0.20	-0.17	-0.18			
7	-0.28	-0.21	-0.19	-0.19	-0.20	-0.18	-0.18			
8	-0.28	-0.27	-0.22	-0.21	-0.20	-0.18	-0.18			
32	-0.29	-0.28	-0.22	-0.21	-0.21	-0.18	-0.18			
33	-0.36	-0.33	-0.26	-0.25	-0.26	-0.21	-0.22			
39	-0.28	-0.32	-0.24	-0.23	-0.20	-0.18	-0.18			
40	-0.29	-0.32	-0.24	-0.23	-0.21	-0.18	-0.19			
41	-0.30	-0.32	-0.25	-0.24	-0.22	-0.19	-0.19			
42	-0.32	-0.33	-0.26	-0.24	-0.23	-0.19	-0.20			
43	-0.33	-0.34	-0.26	-0.25	-0.24	-0.20	-0.21			
44	-0.34	-0.35	-0.27	-0.26	-0.25	-0.20	-0.21			
45	-0.36	-0.36	-0.27	-0.26	-0.25	-0.21	-0.21			
46	-0.28	-0.30	-0.23	-0.21	-0.20	-0.17	-0.17			
47	-0.29	-0.31	-0.23	-0.22	-0.21	-0.17	-0.18			
48	-0.30	-0.31	-0.24	-0.23	-0.22	-0.18	-0.18			
49	-0.32	-0.32	-0.24	-0.23	-0.23	-0.18	-0.19			
50	-0.33	-0.33	-0.25	-0.24	-0.24	-0.19	-0.20			
51	-0.35	-0.34	-0.26	-0.25	-0.25	-0.20	-0.20			
52	-0.36	-0.35	-0.27	-0.26	-0.26	-0.21	-0.21			
53	-0.38	-0.37	-0.28	-0.27	-0.27	-0.21	-0.22			
54	-0.39	-0.38	-0.29	-0.28	-0.28	-0.22	-0.23			
55	-0.39	-0.39	-0.30	-0.28	-0.28	-0.22	-0.23			
56	-0.24	-0.26	-0.20	-0.20	-0.18	-0.16	-0.17			
57	-0.26	-0.25	-0.20	-0.20	-0.19	-0.17	-0.17			
58	-0.27	-0.23	-0.20	-0.19	-0.19	-0.17	-0.18			
59	-0.28	-0.23	-0.20	-0.20	-0.20	-0.18	-0.18			
60	-0.29	-0.23	-0.20	-0.20	-0.21	-0.18	-0.19			
61	-0.30	-0.24	-0.21	-0.21	-0.22	-0.19	-0.19			
62	-0.32	-0.25	-0.22	-0.21	-0.23	-0.19	-0.20			
63	-0.33	-0.26	-0.23	-0.22	-0.24	-0.20	-0.21			
64	-0.36	-0.31	-0.25	-0.24	-0.26	-0.21	-0.22			
65	-0.35	-0.28	-0.24	-0.23	-0.25	-0.20	-0.21			
66	-0.26	-0.26	-0.20	-0.20	-0.19	-0.16	-0.17			
67	-0.27	-0.25	-0.20	-0.20	-0.19	-0.17	-0.17			
68	-0.28	-0.23	-0.20	-0.20	-0.20	-0.17	-0.18			
69	-0.29	-0.23	-0.20	-0.20	-0.21	-0.18	-0.19			
70	-0.31	-0.23	-0.21	-0.20	-0.22	-0.19	-0.19			
71	-0.32	-0.24	-0.21	-0.21	-0.23	-0.19	-0.20			
72	-0.37	-0.32	-0.26	-0.25	-0.26	-0.21	-0.22			
73	-0.36	-0.29	-0.25	-0.24	-0.26	-0.21	-0.22			
74	-0.34	-0.27	-0.23	-0.23	-0.25	-0.20	-0.21			
75	-0.33	-0.26	-0.22	-0.22	-0.24	-0.20	-0.20			
76	-0.28	-0.26	-0.21	-0.20	-0.20	-0.17	-0.18			
77	-0.28	-0.27	-0.21	-0.21	-0.20	-0.17	-0.18			
78	-0.30	-0.27	-0.22	-0.21	-0.22	-0.18	-0.19			
79	-0.31	-0.28	-0.23	-0.22	-0.22	-0.18	-0.19			
80	-0.32	-0.28	-0.23	-0.22	-0.23	-0.19	-0.19			
81	-0.32	-0.29	-0.23	-0.22	-0.23	-0.19	-0.19			
82	-0.33	-0.29	-0.24	-0.23	-0.24	-0.20	-0.20			
83	-0.33	-0.30	-0.24	-0.23	-0.24	-0.20	-0.20			
84	-0.35	-0.30	-0.25	-0.24	-0.25	-0.20	-0.21			
85	-0.35	-0.31	-0.25	-0.24	-0.25	-0.20	-0.21			
86	-0.37	-0.33	-0.27	-0.26	-0.26	-0.21	-0.22			
87	-0.37	-0.34	-0.27	-0.26	-0.27	-0.21	-0.22			
88	-0.26	-0.24	-0.20	-0.19	-0.19	-0.17	-0.17			
89	-0.26	-0.24	-0.20	-0.19	-0.19	-0.17	-0.17			
90	-0.27	-0.23	-0.20	-0.19	-0.20	-0.17	-0.18			
91	-0.27	-0.23	-0.20	-0.19	-0.20	-0.17	-0.18			
92	-0.29	-0.20	-0.19	-0.19	-0.21	-0.18	-0.19			
93	-0.29	-0.20	-0.19	-0.19	-0.21	-0.18	-0.19			
94	-0.31	-0.20	-0.20	-0.19	-0.22	-0.19	-0.20			
95	-0.31	-0.20	-0.20	-0.19	-0.22	-0.19	-0.20			
96	-0.32	-0.23	-0.21	-0.21	-0.23	-0.20	-0.20			
97	-0.32	-0.23	-0.21	-0.21	-0.23	-0.20	-0.20			
98	-0.35	-0.28	-0.24	-0.23	-0.25	-0.21	-0.21			
99	-0.35	-0.28	-0.24	-0.23	-0.25	-0.21	-0.21			
100	-0.26	-0.28	-0.22	-0.21	-0.19	-0.17	-0.17			
101	-0.26	-0.27	-0.21	-0.20	-0.19	-0.17	-0.17			
102	-0.29	-0.28	-0.23	-0.22	-0.21	-0.18	-0.19			
103	-0.29	-0.27	-0.22	-0.22	-0.21	-0.18	-0.19			
104	-0.30	-0.29	-0.23	-0.22	-0.22	-0.19	-0.19			
105	-0.30	-0.28	-0.23	-0.22	-0.22	-0.19	-0.19			
106	-0.32	-0.30	-0.24	-0.23	-0.23	-0.19	-0.20			
107	-0.32	-0.29	-0.24	-0.23	-0.23	-0.19	-0.20			
108	-0.35	-0.31	-0.25	-0.24	-0.25	-0.20	-0.21			
109	-0.35	-0.31	-0.25	-0.24	-0.25	-0.20	-0.21			
110	-0.25	-0.28	-0.21	-0.20	-0.18	-0.16	-0.17			
111	-0.26	-0.31	-0.23	-0.22	-0.19	-0.17	-0.17			
112	-0.38	-0.35	-0.28	-0.27	-0.27	-0.22	-0.23			
113	-0.27	-0.27	-0.21	-0.20	-0.19	-0.16	-0.17			
114	-0.36	-0.32	-0.26	-0.25	-0.25	-0.21	-0.21			

Viale Duca Alessandro n. 11 – 43123 Parma
Cell. 335 1403156 – E mail ing.concari@gmail.com
Sito web: studioaire.it – P.IVA 02561480340

115	-0.29	-0.27	-0.22	-0.21	-0.21	-0.18	-0.18
116	-0.27	-0.27	-0.21	-0.20	-0.19	-0.16	-0.17
117	-0.25	-0.25	-0.20	-0.19	-0.18	-0.16	-0.17
118	-0.25	-0.25	-0.20	-0.19	-0.18	-0.16	-0.17
119	-0.25	-0.27	-0.21	-0.20	-0.18	-0.16	-0.17
120	-0.27	-0.32	-0.24	-0.22	-0.20	-0.17	-0.18
121	-0.28	-0.21	-0.19	-0.19	-0.20	-0.18	-0.18
122	-0.36	-0.32	-0.26	-0.25	-0.26	-0.21	-0.22
123	-0.34	-0.26	-0.23	-0.22	-0.24	-0.20	-0.21
124	-0.34	-0.25	-0.22	-0.22	-0.24	-0.20	-0.21
125	-0.25	-0.31	-0.23	-0.21	-0.18	-0.16	-0.17
126	-0.38	-0.35	-0.27	-0.26	-0.27	-0.22	-0.23
127	-0.36	-0.30	-0.25	-0.24	-0.26	-0.21	-0.22
128	-0.36	-0.32	-0.26	-0.25	-0.26	-0.21	-0.21
129	-0.36	-0.30	-0.25	-0.24	-0.26	-0.21	-0.22
130	-0.33	-0.30	-0.24	-0.23	-0.24	-0.20	-0.21
131	-0.28	-0.28	-0.22	-0.21	-0.20	-0.18	-0.18
132	-0.27	-0.27	-0.22	-0.21	-0.20	-0.17	-0.18

Nodo (G)	**Pt 1/12**	**Pt 2/13**	**Pt 3...**	**Pt 4...**
	-0.39			
	-0.16			

MODELLO 1 VANO ASCENSORE

Nodo (G)	**Pt 1/12**	**Pt 2/13**	**Pt 3...**	**Pt 4...**							
		daN/cm2	daN/cm2	daN/cm2	daN/cm2	daN/cm2	daN/cm2	daN/cm2	daN/cm2	daN/cm2	daN/cm2
daN/cm2											
15		-0.91	-1.18	-0.97	-0.65	-0.44	-0.46				
16		-0.83	-1.12	-0.92	-0.61	-0.42	-0.44				
17		-1.37	-1.74	-1.35	-1.01	-0.82	-0.71				
18		-1.50	-1.80	-1.40	-1.09	-0.87	-0.76				
19		-1.24	-1.60	-1.26	-0.91	-0.77	-0.70				
20		-1.23	-1.45	-1.16	-0.90	-0.76	-0.69				
21		-1.49	-1.75	-1.37	-1.08	-0.87	-0.76				
22		-1.01	-1.43	-1.12	-0.74	-0.66	-0.64				
23		-0.99	-1.27	-1.02	-0.73	-0.66	-0.63				
24		-0.87	-1.30	-1.03	-0.64	-0.58	-0.58				
25		-0.86	-1.15	-0.94	-0.63	-0.57	-0.57				
26		-0.89	-1.24	-1.00	-0.65	-0.51	-0.52				
27		-0.88	-1.09	-0.90	-0.64	-0.50	-0.51				
28		-0.90	-1.03	-0.94	-0.65	-0.44	-0.45				
29		-1.21	-1.31	-1.07	-0.89	-0.75	-0.69				
30		-1.47	-1.70	-1.34	-1.07	-0.86	-0.75				
31		-0.97	-1.12	-0.93	-0.72	-0.65	-0.63				
32		-0.84	-1.00	-0.84	-0.62	-0.56	-0.57				
33		-0.86	-0.94	-0.82	-0.63	-0.50	-0.51				
34		-0.89	-0.87	-0.91	-0.64	-0.43	-0.45				
35		-1.20	-1.26	-1.04	-0.88	-0.75	-0.68				
36		-1.46	-1.65	-1.30	-1.06	-0.85	-0.74				
37		-0.96	-0.97	-0.83	-0.71	-0.64	-0.62				
38		-0.83	-0.85	-0.75	-0.61	-0.56	-0.56				
39		-0.85	-0.79	-0.78	-0.62	-0.49	-0.50				
40		-0.87	-0.72	-0.88	-0.63	-0.43	-0.44				
41		-1.19	-1.21	-1.01	-0.87	-0.74	-0.68				
42		-1.44	-1.60	-1.27	-1.05	-0.85	-0.74				
43		-0.94	-0.82	-0.74	-0.70	-0.64	-0.62				
44		-0.81	-0.70	-0.66	-0.61	-0.55	-0.56				
45		-0.84	-0.64	-0.75	-0.61	-0.49	-0.50				
46		-0.86	-0.60	-0.85	-0.62	-0.42	-0.44				
47		-1.27	-1.31	-1.08	-0.93	-0.78	-0.70				
48		-1.43	-1.55	-1.24	-1.04	-0.84	-0.73				
49		-0.84	-0.63	-0.62	-0.63	-0.60	-0.59				
50		-0.80	-0.58	-0.63	-0.60	-0.55	-0.55				
51		-0.82	-0.57	-0.72	-0.61	-0.48	-0.49				
52		-0.85	-0.55	-0.82	-0.61	-0.42	-0.43				
53		-1.16	-1.20	-1.00	-0.86	-0.73	-0.67				
54		-1.42	-1.59	-1.26	-1.04	-0.84	-0.73				
55		-0.91	-0.81	-0.73	-0.68	-0.63	-0.61				
56		-0.79	-0.69	-0.65	-0.59	-0.54	-0.55				
57		-0.81	-0.63	-0.74	-0.60	-0.48	-0.49				
58		-0.83	-0.59	-0.84	-0.61	-0.41	-0.43				
59		-1.15	-1.24	-1.02	-0.85	-0.73	-0.66				
60		-1.41	-1.63	-1.29	-1.03	-0.83	-0.72				
61		-0.89	-0.95	-0.82	-0.67	-0.62	-0.60				
62		-0.78	-0.83	-0.73	-0.58	-0.54	-0.54				
63		-0.80	-0.77	-0.77	-0.59	-0.47	-0.48				
64		-0.83	-0.70	-0.86	-0.60	-0.41	-0.43				
65		-1.14	-1.28	-1.04	-0.84	-0.72	-0.66				
66		-1.39	-1.67	-1.31	-1.02	-0.83	-0.72				
67		-0.88	-1.09	-0.90	-0.66	-0.62	-0.60				
68		-0.76	-0.97	-0.82	-0.58	-0.53	-0.54				
69		-0.79	-0.91	-0.79	-0.59	-0.47	-0.48				
70		-0.83	-0.84	-0.88	-0.61	-0.41	-0.43				
71		-1.12	-1.41	-1.12	-0.83	-0.72	-0.65				
72		-1.38	-1.71	-1.33	-1.01	-0.82	-0.71				
73		-0.87	-1.23	-0.98	-0.65	-0.61	-0.59				
74		-0.76	-1.12	-0.90	-0.57	-0.53	-0.54				
75		-0.79	-1.05	-0.86	-0.59	-0.47	-0.48				
76		-0.83	-0.98	-0.90	-0.61	-0.42	-0.43				
77		-1.11	-1.55	-1.21	-0.83	-0.71	-0.65				

Viale Duca Alessandro n. 11 – 43123 Parma
Cell. 335 1403156 – E mail ing.concari@gmail.com
Sito web: studioaire.it – P.IVA 02561480340

78	-0.86	-1.38	-1.07	-0.65	-0.61	-0.59
79	-0.76	-1.26	-0.98	-0.58	-0.54	-0.54
80	-0.80	-1.19	-0.95	-0.59	-0.48	-0.49

Nodo (G)	**Pt 1/12**	**Pt 2/13**	**Pt 3...**	**Pt 4...**
	-1.80			
	-0.41			

MODELLO LOCALE TECNICO

Nodo (G)	**Pt 1/12**	**Pt 2/13**	**Pt 3...**	**Pt 4...**							
	daN/cm2	daN/cm2	daN/cm2	daN/cm2	daN/cm2	daN/cm2	daN/cm2	daN/cm2	daN/cm2	daN/cm2	daN/cm2
17	-0.38	-0.47	-0.37	-0.29	-0.26	-0.25					
25	-0.39	-0.47	-0.37	-0.29	-0.26	-0.25					
33	-0.39	-0.47	-0.37	-0.29	-0.26	-0.25					
41	-0.39	-0.46	-0.37	-0.29	-0.26	-0.26					
49	-0.40	-0.46	-0.37	-0.29	-0.26	-0.26					
57	-0.40	-0.46	-0.37	-0.30	-0.27	-0.26					
65	-0.40	-0.45	-0.37	-0.30	-0.27	-0.26					
73	-0.40	-0.45	-0.37	-0.30	-0.27	-0.26					
81	-0.41	-0.45	-0.37	-0.30	-0.27	-0.27					
89	-0.41	-0.46	-0.38	-0.31	-0.28	-0.27					
97	-0.41	-0.47	-0.38	-0.31	-0.28	-0.27					
105	-0.41	-0.47	-0.39	-0.31	-0.28	-0.27					
113	-0.42	-0.48	-0.39	-0.31	-0.28	-0.28					
121	-0.42	-0.49	-0.40	-0.31	-0.28	-0.28					
129	-0.42	-0.50	-0.40	-0.32	-0.29	-0.28					
137	-0.43	-0.51	-0.41	-0.32	-0.29	-0.28					
145	-0.43	-0.52	-0.42	-0.32	-0.29	-0.28					
165	-0.66	-0.81	-0.61	-0.49	-0.45	-0.44					
173	-0.66	-0.81	-0.61	-0.50	-0.45	-0.44					
181	-0.67	-0.81	-0.61	-0.50	-0.45	-0.44					
189	-0.67	-0.80	-0.60	-0.50	-0.45	-0.45					
197	-0.67	-0.80	-0.60	-0.50	-0.46	-0.45					
205	-0.68	-0.80	-0.60	-0.51	-0.46	-0.45					
213	-0.68	-0.79	-0.60	-0.51	-0.46	-0.45					
221	-0.68	-0.79	-0.60	-0.51	-0.47	-0.46					
229	-0.69	-0.79	-0.60	-0.51	-0.47	-0.46					
237	-0.69	-0.79	-0.61	-0.52	-0.47	-0.46					
245	-0.70	-0.80	-0.61	-0.52	-0.47	-0.46					
253	-0.70	-0.81	-0.62	-0.52	-0.48	-0.47					
261	-0.70	-0.82	-0.62	-0.53	-0.48	-0.47					
269	-0.71	-0.83	-0.63	-0.53	-0.48	-0.47					
277	-0.71	-0.84	-0.64	-0.53	-0.48	-0.47					
285	-0.72	-0.85	-0.64	-0.53	-0.49	-0.48					
293	-0.72	-0.86	-0.65	-0.54	-0.49	-0.48					
307	-0.63	-0.75	-0.57	-0.47	-0.43	-0.42					
315	-0.60	-0.69	-0.53	-0.45	-0.41	-0.40					
323	-0.58	-0.62	-0.50	-0.43	-0.39	-0.38					
331	-0.55	-0.58	-0.48	-0.41	-0.37	-0.37					
339	-0.53	-0.55	-0.45	-0.40	-0.36	-0.35					
347	-0.51	-0.52	-0.43	-0.38	-0.34	-0.34					
355	-0.49	-0.50	-0.41	-0.36	-0.33	-0.32					
363	-0.47	-0.49	-0.40	-0.35	-0.31	-0.31					
371	-0.44	-0.49	-0.39	-0.33	-0.30	-0.29					
379	-0.42	-0.48	-0.38	-0.32	-0.28	-0.28					
387	-0.40	-0.47	-0.37	-0.30	-0.27	-0.26					
395	-0.70	-0.80	-0.61	-0.52	-0.47	-0.46					
403	-0.67	-0.73	-0.57	-0.50	-0.46	-0.45					
407	-0.36	-0.49	-0.38	-0.27	-0.24	-0.24					
408	-0.37	-0.49	-0.38	-0.27	-0.24	-0.24					
409	-0.37	-0.49	-0.38	-0.28	-0.25	-0.24					
410	-0.37	-0.48	-0.38	-0.28	-0.25	-0.24					
411	-0.64	-0.69	-0.54	-0.48	-0.44	-0.43					
415	-0.38	-0.48	-0.38	-0.28	-0.25	-0.25					
416	-0.38	-0.48	-0.38	-0.28	-0.25	-0.25					
417	-0.38	-0.47	-0.38	-0.29	-0.26	-0.25					
418	-0.39	-0.47	-0.38	-0.29	-0.26	-0.25					
419	-0.61	-0.65	-0.52	-0.46	-0.42	-0.41					
423	-0.39	-0.47	-0.38	-0.29	-0.26	-0.25					
424	-0.39	-0.48	-0.38	-0.29	-0.26	-0.26					
425	-0.40	-0.49	-0.39	-0.29	-0.26	-0.26					
426	-0.40	-0.50	-0.39	-0.30	-0.27	-0.26					
427	-0.59	-0.62	-0.49	-0.44	-0.40	-0.39					
435	-0.57	-0.59	-0.47	-0.42	-0.39	-0.38					
443	-0.54	-0.57	-0.45	-0.40	-0.37	-0.36					
447	-0.40	-0.51	-0.40	-0.30	-0.27	-0.26					
448	-0.40	-0.51	-0.40	-0.30	-0.27	-0.26					
449	-0.40	-0.52	-0.41	-0.30	-0.27	-0.27					
450	-0.41	-0.53	-0.42	-0.30	-0.27	-0.27					
451	-0.52	-0.57	-0.44	-0.39	-0.35	-0.35					
455	-0.41	-0.54	-0.42	-0.31	-0.28	-0.27					
456	-0.41	-0.55	-0.43	-0.31	-0.28	-0.27					
457	-0.41	-0.57	-0.43	-0.31	-0.28	-0.27					
458	-0.36	-0.50	-0.38	-0.27	-0.24	-0.23					
459	-0.49	-0.56	-0.43	-0.37	-0.34	-0.33					
467	-0.47	-0.56	-0.43	-0.35	-0.32	-0.32					
475	-0.45	-0.55	-0.42	-0.34	-0.31	-0.30					
476	-0.63	-0.75	-0.57	-0.47	-0.43	-0.42					
477	-0.60	-0.68	-0.53	-0.45	-0.41	-0.40					
478	-0.58	-0.61	-0.49	-0.43	-0.39	-0.38					
479	-0.55	-0.56	-0.47	-0.41	-0.37	-0.37					
480	-0.53	-0.53	-0.44	-0.40	-0.36	-0.35					
481	-0.51	-0.50	-0.42	-0.38	-0.34	-0.34					
482	-0.49	-0.48	-0.40	-0.36	-0.33	-0.32					

Viale Duca Alessandro n. 11 – 43123 Parma
Cell. 335 1403156 – E mail ing.concari@gmail.com
Sito web: studioaire.it – P.IVA 02561480340

483	-0.47	-0.47	-0.39	-0.35	-0.31	-0.31
484	-0.45	-0.47	-0.38	-0.33	-0.30	-0.29
485	-0.42	-0.46	-0.37	-0.32	-0.29	-0.28
486	-0.40	-0.46	-0.37	-0.30	-0.27	-0.26
487	-0.63	-0.74	-0.57	-0.47	-0.43	-0.42
488	-0.61	-0.67	-0.53	-0.45	-0.41	-0.40
489	-0.58	-0.61	-0.49	-0.43	-0.39	-0.39
490	-0.55	-0.54	-0.46	-0.41	-0.38	-0.37
491	-0.53	-0.51	-0.43	-0.40	-0.36	-0.35
492	-0.51	-0.48	-0.41	-0.38	-0.34	-0.34
493	-0.49	-0.46	-0.39	-0.36	-0.33	-0.32
494	-0.47	-0.45	-0.38	-0.35	-0.31	-0.31
495	-0.45	-0.45	-0.37	-0.33	-0.30	-0.29
496	-0.43	-0.44	-0.36	-0.32	-0.29	-0.28
497	-0.41	-0.45	-0.37	-0.30	-0.27	-0.27
498	-0.64	-0.74	-0.56	-0.48	-0.43	-0.42
499	-0.61	-0.67	-0.52	-0.45	-0.41	-0.40
500	-0.58	-0.60	-0.48	-0.43	-0.39	-0.39
501	-0.55	-0.53	-0.45	-0.41	-0.38	-0.37
502	-0.53	-0.49	-0.42	-0.39	-0.36	-0.35
503	-0.50	-0.46	-0.40	-0.38	-0.34	-0.34
504	-0.48	-0.44	-0.38	-0.36	-0.33	-0.32
505	-0.46	-0.44	-0.37	-0.35	-0.31	-0.31
506	-0.45	-0.43	-0.36	-0.33	-0.30	-0.29
507	-0.43	-0.43	-0.36	-0.32	-0.29	-0.28
508	-0.41	-0.45	-0.37	-0.30	-0.27	-0.27
509	-0.64	-0.73	-0.56	-0.48	-0.43	-0.43
510	-0.61	-0.66	-0.52	-0.46	-0.41	-0.41
511	-0.58	-0.59	-0.48	-0.43	-0.39	-0.39
512	-0.55	-0.53	-0.44	-0.41	-0.38	-0.37
513	-0.53	-0.47	-0.41	-0.39	-0.36	-0.35
514	-0.50	-0.44	-0.39	-0.38	-0.34	-0.34
515	-0.48	-0.42	-0.37	-0.36	-0.33	-0.32
516	-0.46	-0.42	-0.36	-0.35	-0.31	-0.31
517	-0.45	-0.41	-0.35	-0.33	-0.30	-0.29
518	-0.43	-0.42	-0.36	-0.32	-0.29	-0.28
519	-0.41	-0.44	-0.37	-0.31	-0.28	-0.27
520	-0.64	-0.73	-0.56	-0.48	-0.44	-0.43
521	-0.36	-0.50	-0.38	-0.27	-0.24	-0.23
522	-0.61	-0.66	-0.52	-0.46	-0.42	-0.41
523	-0.58	-0.59	-0.48	-0.44	-0.40	-0.39
524	-0.55	-0.52	-0.44	-0.41	-0.38	-0.37
525	-0.53	-0.45	-0.40	-0.39	-0.36	-0.35
526	-0.50	-0.42	-0.38	-0.38	-0.34	-0.34
527	-0.48	-0.40	-0.36	-0.36	-0.33	-0.32
528	-0.46	-0.40	-0.35	-0.35	-0.31	-0.31
529	-0.45	-0.40	-0.35	-0.33	-0.30	-0.30
530	-0.43	-0.42	-0.36	-0.32	-0.29	-0.28
531	-0.41	-0.44	-0.37	-0.31	-0.28	-0.27
532	-0.64	-0.72	-0.56	-0.48	-0.44	-0.43
533	-0.61	-0.65	-0.52	-0.46	-0.42	-0.41
534	-0.58	-0.58	-0.47	-0.44	-0.40	-0.39
535	-0.55	-0.51	-0.43	-0.41	-0.38	-0.37
536	-0.53	-0.45	-0.40	-0.39	-0.36	-0.35
537	-0.50	-0.40	-0.37	-0.38	-0.34	-0.34
538	-0.48	-0.39	-0.35	-0.36	-0.33	-0.32
539	-0.46	-0.38	-0.34	-0.35	-0.32	-0.31
540	-0.45	-0.39	-0.35	-0.33	-0.30	-0.30
541	-0.43	-0.42	-0.36	-0.32	-0.29	-0.28
542	-0.42	-0.44	-0.36	-0.31	-0.28	-0.27
543	-0.65	-0.72	-0.56	-0.48	-0.44	-0.43
544	-0.62	-0.65	-0.52	-0.46	-0.42	-0.41
545	-0.58	-0.58	-0.47	-0.44	-0.40	-0.39
546	-0.56	-0.51	-0.43	-0.42	-0.38	-0.37
547	-0.53	-0.44	-0.39	-0.40	-0.36	-0.35
548	-0.50	-0.39	-0.36	-0.38	-0.34	-0.34
549	-0.48	-0.37	-0.35	-0.36	-0.33	-0.32
550	-0.47	-0.37	-0.34	-0.35	-0.32	-0.31
551	-0.45	-0.39	-0.35	-0.34	-0.30	-0.30
552	-0.43	-0.41	-0.36	-0.32	-0.29	-0.29
553	-0.42	-0.43	-0.36	-0.31	-0.28	-0.27
554	-0.65	-0.72	-0.56	-0.49	-0.44	-0.43
555	-0.62	-0.64	-0.51	-0.46	-0.42	-0.41
556	-0.59	-0.57	-0.47	-0.44	-0.40	-0.39
557	-0.56	-0.50	-0.43	-0.42	-0.38	-0.37
558	-0.53	-0.44	-0.39	-0.40	-0.36	-0.35
559	-0.51	-0.38	-0.36	-0.38	-0.34	-0.34
560	-0.48	-0.35	-0.34	-0.36	-0.33	-0.32
561	-0.47	-0.37	-0.34	-0.35	-0.32	-0.31
562	-0.45	-0.39	-0.35	-0.34	-0.31	-0.30
563	-0.44	-0.41	-0.36	-0.33	-0.29	-0.29
564	-0.42	-0.43	-0.36	-0.31	-0.28	-0.28
565	-0.65	-0.71	-0.56	-0.49	-0.45	-0.44
566	-0.62	-0.64	-0.51	-0.47	-0.42	-0.42
567	-0.59	-0.57	-0.47	-0.44	-0.40	-0.39
568	-0.56	-0.50	-0.43	-0.42	-0.38	-0.37
569	-0.53	-0.44	-0.39	-0.40	-0.36	-0.36
570	-0.51	-0.37	-0.35	-0.38	-0.35	-0.34
571	-0.49	-0.35	-0.34	-0.36	-0.33	-0.33
572	-0.47	-0.36	-0.34	-0.35	-0.32	-0.31
573	-0.45	-0.38	-0.35	-0.34	-0.31	-0.30
574	-0.44	-0.41	-0.36	-0.33	-0.30	-0.29
575	-0.42	-0.43	-0.36	-0.32	-0.28	-0.28
576	-0.66	-0.72	-0.56	-0.49	-0.45	-0.44
577	-0.63	-0.65	-0.52	-0.47	-0.43	-0.42
578	-0.59	-0.58	-0.48	-0.44	-0.40	-0.40
579	-0.56	-0.51	-0.43	-0.42	-0.38	-0.38
580	-0.54	-0.44	-0.40	-0.40	-0.37	-0.36

Viale Duca Alessandro n. 11 – 43123 Parma
Cell. 335 1403156 – E mail ing.concari@gmail.com
Sito web: studioaire.it – P.IVA 02561480340

581	-0.51	-0.38	-0.36	-0.38	-0.35	-0.34
582	-0.49	-0.35	-0.34	-0.37	-0.33	-0.33
583	-0.47	-0.37	-0.35	-0.35	-0.32	-0.31
584	-0.46	-0.39	-0.35	-0.34	-0.31	-0.30
585	-0.44	-0.41	-0.36	-0.33	-0.30	-0.29
586	-0.43	-0.43	-0.37	-0.32	-0.29	-0.28
587	-0.66	-0.73	-0.57	-0.50	-0.45	-0.44
588	-0.63	-0.66	-0.52	-0.47	-0.43	-0.42
589	-0.60	-0.59	-0.48	-0.45	-0.41	-0.40
590	-0.57	-0.52	-0.44	-0.43	-0.39	-0.38
591	-0.54	-0.45	-0.40	-0.41	-0.37	-0.36
592	-0.52	-0.40	-0.37	-0.39	-0.35	-0.35
593	-0.49	-0.38	-0.35	-0.37	-0.34	-0.33
594	-0.47	-0.38	-0.35	-0.36	-0.32	-0.32
595	-0.46	-0.40	-0.36	-0.34	-0.31	-0.31
596	-0.44	-0.42	-0.37	-0.33	-0.30	-0.29
597	-0.43	-0.44	-0.37	-0.32	-0.29	-0.28
598	-0.67	-0.74	-0.57	-0.50	-0.45	-0.44
599	-0.63	-0.67	-0.53	-0.47	-0.43	-0.42
600	-0.60	-0.60	-0.49	-0.45	-0.41	-0.40
601	-0.57	-0.53	-0.45	-0.43	-0.39	-0.38
602	-0.55	-0.46	-0.41	-0.41	-0.37	-0.37
603	-0.52	-0.42	-0.38	-0.39	-0.36	-0.35
604	-0.50	-0.40	-0.36	-0.37	-0.34	-0.33
605	-0.48	-0.40	-0.36	-0.36	-0.33	-0.32
606	-0.46	-0.41	-0.36	-0.35	-0.31	-0.31
607	-0.45	-0.43	-0.37	-0.33	-0.30	-0.30
608	-0.43	-0.45	-0.38	-0.32	-0.29	-0.29
609	-0.67	-0.75	-0.58	-0.50	-0.46	-0.45
610	-0.64	-0.68	-0.54	-0.48	-0.43	-0.43
611	-0.61	-0.61	-0.49	-0.46	-0.41	-0.41
612	-0.58	-0.54	-0.45	-0.43	-0.39	-0.39
613	-0.55	-0.48	-0.42	-0.41	-0.38	-0.37
614	-0.53	-0.45	-0.39	-0.39	-0.36	-0.35
615	-0.50	-0.43	-0.38	-0.38	-0.34	-0.34
616	-0.48	-0.42	-0.37	-0.36	-0.33	-0.32
617	-0.47	-0.42	-0.37	-0.35	-0.32	-0.31
618	-0.45	-0.44	-0.38	-0.34	-0.31	-0.30
619	-0.43	-0.46	-0.39	-0.32	-0.29	-0.29
620	-0.68	-0.76	-0.59	-0.51	-0.46	-0.45
621	-0.64	-0.69	-0.54	-0.48	-0.44	-0.43
622	-0.61	-0.62	-0.50	-0.46	-0.42	-0.41
623	-0.59	-0.55	-0.46	-0.44	-0.40	-0.39
624	-0.56	-0.51	-0.43	-0.42	-0.38	-0.37
625	-0.53	-0.48	-0.41	-0.40	-0.36	-0.36
626	-0.51	-0.46	-0.39	-0.38	-0.35	-0.34
627	-0.49	-0.45	-0.38	-0.37	-0.33	-0.33
628	-0.47	-0.45	-0.38	-0.35	-0.32	-0.31
629	-0.45	-0.45	-0.38	-0.34	-0.31	-0.30
630	-0.44	-0.47	-0.39	-0.33	-0.30	-0.29
631	-0.68	-0.77	-0.59	-0.51	-0.46	-0.45
632	-0.65	-0.70	-0.55	-0.49	-0.44	-0.43
633	-0.62	-0.63	-0.51	-0.46	-0.42	-0.41
634	-0.59	-0.57	-0.47	-0.44	-0.40	-0.40
635	-0.57	-0.53	-0.45	-0.42	-0.39	-0.38
636	-0.54	-0.50	-0.42	-0.40	-0.37	-0.36
637	-0.52	-0.48	-0.41	-0.39	-0.35	-0.35
638	-0.49	-0.48	-0.40	-0.37	-0.34	-0.33
639	-0.48	-0.48	-0.39	-0.36	-0.32	-0.32
640	-0.46	-0.47	-0.39	-0.34	-0.31	-0.30
641	-0.44	-0.48	-0.40	-0.33	-0.30	-0.29
642	-0.69	-0.78	-0.60	-0.51	-0.47	-0.46
643	-0.66	-0.71	-0.56	-0.49	-0.45	-0.44
644	-0.63	-0.64	-0.52	-0.47	-0.43	-0.42
645	-0.60	-0.60	-0.49	-0.45	-0.41	-0.40
646	-0.57	-0.56	-0.46	-0.43	-0.39	-0.38
647	-0.55	-0.53	-0.44	-0.41	-0.37	-0.37
648	-0.52	-0.51	-0.42	-0.39	-0.36	-0.35
649	-0.50	-0.51	-0.41	-0.38	-0.34	-0.34
650	-0.48	-0.50	-0.40	-0.36	-0.33	-0.32
651	-0.46	-0.50	-0.40	-0.35	-0.31	-0.31
652	-0.44	-0.50	-0.40	-0.33	-0.30	-0.30
653	-0.69	-0.79	-0.61	-0.52	-0.47	-0.46
654	-0.66	-0.72	-0.56	-0.50	-0.45	-0.44
655	-0.63	-0.66	-0.53	-0.47	-0.43	-0.42
656	-0.61	-0.62	-0.50	-0.45	-0.41	-0.41
657	-0.58	-0.59	-0.48	-0.43	-0.40	-0.39
658	-0.56	-0.56	-0.46	-0.42	-0.38	-0.37
659	-0.53	-0.54	-0.44	-0.40	-0.36	-0.36
660	-0.51	-0.54	-0.43	-0.38	-0.35	-0.34
661	-0.49	-0.53	-0.42	-0.36	-0.33	-0.32
662	-0.47	-0.53	-0.41	-0.35	-0.32	-0.31
663	-0.45	-0.52	-0.41	-0.34	-0.30	-0.30
664	-0.70	-0.81	-0.62	-0.52	-0.48	-0.47
665	-0.73	-0.88	-0.66	-0.54	-0.50	-0.49
666	-0.67	-0.75	-0.58	-0.50	-0.46	-0.45
667	-0.65	-0.72	-0.56	-0.48	-0.44	-0.43
668	-0.62	-0.68	-0.53	-0.46	-0.42	-0.41
669	-0.60	-0.65	-0.51	-0.45	-0.41	-0.40
670	-0.57	-0.62	-0.49	-0.43	-0.39	-0.38
671	-0.55	-0.60	-0.47	-0.41	-0.37	-0.37
672	-0.52	-0.59	-0.46	-0.39	-0.36	-0.35
673	-0.50	-0.59	-0.45	-0.37	-0.34	-0.33
674	-0.48	-0.58	-0.44	-0.36	-0.33	-0.32
675	-0.46	-0.58	-0.43	-0.34	-0.31	-0.30
676	-0.44	-0.57	-0.43	-0.33	-0.29	-0.29
677	-0.62	-0.76	-0.57	-0.47	-0.42	-0.42
678	-0.65	-0.82	-0.61	-0.49	-0.44	-0.43

Viale Duca Alessandro n. 11 – 43123 Parma
Cell. 335 1403156 – E mail ing.concari@gmail.com
Sito web: studioaire.it – P.IVA 02561480340

679	-0.60	-0.69	-0.53	-0.45	-0.41	-0.40
680	-0.57	-0.63	-0.51	-0.43	-0.39	-0.38
681	-0.55	-0.60	-0.49	-0.41	-0.37	-0.37
682	-0.53	-0.57	-0.46	-0.40	-0.36	-0.35
683	-0.51	-0.54	-0.44	-0.38	-0.34	-0.34
684	-0.49	-0.52	-0.42	-0.36	-0.33	-0.32
685	-0.46	-0.51	-0.41	-0.35	-0.31	-0.31
686	-0.44	-0.50	-0.40	-0.33	-0.30	-0.29
687	-0.42	-0.50	-0.39	-0.31	-0.28	-0.28
688	-0.40	-0.49	-0.38	-0.30	-0.27	-0.26
689	-0.38	-0.48	-0.37	-0.28	-0.25	-0.25
690	-0.65	-0.82	-0.61	-0.49	-0.44	-0.44
691	-0.38	-0.48	-0.37	-0.28	-0.25	-0.25
692	-0.72	-0.87	-0.65	-0.54	-0.49	-0.48
693	-0.43	-0.54	-0.42	-0.32	-0.29	-0.29

Nodo (G)	**Pt 1/12**	**Pt 2/13**	**Pt 3...**	**Pt 4...**
	-0.88			
	-0.23			

RISULTATI ELEMENTI SHELL

MODELLO 2 SCALA ANTINCENDIO

Macro	Tipo	Angolo 1-X (gradi)
1	**Guscio**	**0.0**

M_G	**Cmb**	**Nodo**	**N max**	**N min**	**N 1**	**N 2**	**N 1-2**	**M max**	**M min**	**M 1**	**M 2**	**M 1-2**
			daN/cm	daN/cm	daN/cm	daN/cm	daN/cm	daN	daN	daN	daN	daN
1	103	2	0.37	-3.42	0.37	-3.41	-0.13	-1064.34	-1667.49	-1064.44	-1667.39	-7.75
1	103	6	-0.34	-2.79	-0.42	-2.70	0.45	-486.91	-750.16	-490.94	-746.14	32.30
1	103	7	-1.45	-4.36	-1.59	-4.21	0.64	560.24	43.65	517.83	86.06	141.81
1	103	8	-0.78	-4.47	-0.80	-4.45	-0.29	135.17	-196.76	-42.33	-19.26	165.56
1	103	32	-0.21	-2.79	-0.23	-2.76	-0.24	-201.78	-530.30	-300.50	-431.58	150.62
1	103	33	0.25	-2.62	0.23	-2.61	-0.19	-1353.48	-2441.70	-1500.72	-2294.47	372.21
1	103	39	-0.90	-4.75	-0.98	-4.67	-0.55	-8.07	-131.08	-59.39	-79.76	60.66
1	103	40	-0.59	-5.98	-0.60	-5.96	0.30	368.09	-41.38	-36.33	363.04	45.20
1	103	41	-0.64	-5.59	-0.64	-5.58	8.82e-02	370.05	-39.69	-39.50	369.85	-9.02
1	103	42	-0.68	-4.11	-0.75	-4.04	0.49	-116.86	-192.21	-121.78	-187.29	18.61
1	103	43	-0.40	-2.51	-0.44	-2.47	0.30	321.61	-1074.02	321.17	-1073.58	-24.82
1	103	44	-7.48e-02	-2.28	-0.77	-1.58	1.02	-132.57	-373.35	-132.65	-373.27	4.33
1	103	45	0.88	-2.38	-0.35	-1.15	1.58	34.91	-90.61	-66.54	10.85	49.41
1	103	46	0.75	-1.80	-0.37	-0.68	1.26	7.81	-23.09	-18.09	2.80	11.39
1	103	47	-0.38	-1.61	-0.74	-1.26	0.55	10.55	-72.58	-62.16	0.13	27.52
1	103	48	-0.24	-2.38	-0.45	-2.16	0.65	165.36	-227.32	148.06	-210.03	80.58
1	103	49	-0.93	-3.45	-0.95	-3.43	0.23	240.73	-84.78	-70.35	226.30	66.98
1	103	50	-0.56	-3.98	-0.57	-3.97	-0.17	567.42	-60.51	-37.31	544.22	118.46
1	103	51	-0.71	-3.60	-0.72	-3.59	-0.20	489.88	-109.70	-40.72	420.90	191.31
1	103	52	-0.16	-2.18	-0.29	-2.06	-0.49	-75.61	-366.82	-150.19	-292.23	127.11
1	103	53	-0.21	-1.97	-0.53	-1.64	0.69	456.36	-1581.96	429.18	-1554.79	233.78
1	103	54	0.13	-2.33	-0.83	-1.38	-1.20	-157.24	-698.06	-164.17	-691.13	60.83
1	103	55	0.91	-2.46	-0.33	-1.22	-1.63	45.26	-117.94	-86.59	13.92	-64.29
1	103	56	-0.90	-1.89	-1.80	-0.99	-0.28	280.36	-3.23	279.57	-2.43	14.99
1	103	57	-1.35	-1.52	-1.36	-1.52	-2.93e-02	319.33	-87.37	318.72	-86.76	-15.74
1	103	58	-0.98	-2.84	-1.03	-2.79	0.28	415.70	-150.40	407.34	-142.03	68.30
1	103	59	-1.74	-4.19	-1.75	-4.19	-8.00e-02	491.53	-39.96	421.80	29.78	179.45
1	103	60	-2.06	-5.48	-2.07	-5.46	0.22	513.67	193.24	434.35	272.55	138.29
1	103	61	-1.23	-5.66	-1.23	-5.66	-0.16	520.04	239.40	512.23	247.21	46.16
1	103	62	-0.48	-5.10	-0.51	-5.07	-0.39	634.53	-131.07	627.88	-124.42	-71.05

Viale Duca Alessandro n. 11 – 43123 Parma
Cell. 335 1403156 – E mail ing.concari@gmail.com
Sito web: studioaire.it – P.IVA 02561480340

1	103	63	-0.29	-3.88	-0.29	-3.88	-7.68e-02	841.26	-450.35	837.22	-446.30	72.16
1	103	64	-0.96	-1.73	-1.25	-1.43	0.38	727.05	-22.20	720.34	-15.48	70.62
1	103	65	-0.62	-2.28	-0.62	-2.28	6.52e-02	792.72	-302.63	742.78	-252.68	228.50
1	103	66	-0.86	-1.76	-1.64	-0.99	0.31	366.24	-14.60	359.60	-7.96	49.87
1	103	67	-1.39	-1.58	-1.39	-1.57	2.31e-02	432.02	-73.86	391.79	-33.63	136.88
1	103	68	-0.93	-2.91	-1.08	-2.76	-0.53	488.05	-40.96	464.33	-17.24	109.49
1	103	69	-1.33	-4.08	-1.34	-4.07	-0.14	498.36	134.41	465.52	167.25	104.28
1	103	70	-1.55	-4.86	-1.63	-4.78	-0.51	643.30	186.20	476.61	352.88	220.02
1	103	71	-1.21	-4.58	-1.22	-4.58	0.16	757.77	28.04	518.49	267.32	342.57
1	103	72	-1.00	-1.75	-1.28	-1.47	-0.36	625.00	-8.40	624.88	-8.28	8.75
1	103	73	-0.75	-2.21	-0.76	-2.20	0.10	681.54	-371.79	676.31	-366.57	-73.98
1	103	74	-0.39	-3.43	-0.39	-3.43	-6.08e-02	859.67	-644.13	828.86	-613.31	213.06
1	103	75	-0.47	-4.25	-0.52	-4.20	0.44	816.67	-404.94	603.33	-191.60	463.80
1	103	76	-0.79	-1.56	-0.90	-1.45	0.27	197.66	-57.39	104.04	36.23	122.93
1	103	77	-0.65	-1.47	-0.74	-1.39	-0.25	166.40	-30.28	109.77	26.36	89.06
1	103	78	-0.87	-3.84	-0.87	-3.84	6.65e-03	318.84	72.66	125.57	265.93	101.12
1	103	79	-0.96	-3.66	-0.97	-3.65	-0.15	401.30	56.06	128.07	329.28	140.27
1	103	80	-1.33	-4.04	-1.33	-4.04	9.79e-03	605.35	87.61	227.06	465.90	229.68
1	103	81	-0.72	-4.11	-0.72	-4.11	3.14e-02	631.81	47.20	183.48	495.53	247.18
1	103	82	-1.23	-3.75	-1.23	-3.75	6.51e-02	669.05	-85.44	212.07	371.53	368.72
1	103	83	-0.59	-3.75	-0.60	-3.75	0.15	671.52	-116.70	164.14	390.68	377.48
1	103	84	-0.60	-3.03	-0.62	-3.02	0.21	420.23	-488.49	-13.38	-54.88	453.88
1	103	85	-0.72	-2.76	-0.76	-2.72	0.27	364.88	-419.97	63.50	-118.58	381.72
1	103	86	0.10	-2.19	9.51e-02	-2.18	-0.15	-54.86	-339.77	-76.28	-318.36	-75.11
1	103	87	-0.44	-2.20	-0.52	-2.12	0.37	11.20	-155.86	10.81	-155.48	7.97
1	103	88	-1.31	-1.91	-1.77	-1.45	0.25	475.39	-47.85	467.91	-40.37	62.10
1	103	89	-1.18	-2.02	-1.68	-1.52	-0.41	483.68	-46.77	473.48	-36.57	72.85
1	103	90	-1.67	-2.37	-1.79	-2.25	0.26	547.19	-29.28	531.85	-13.94	92.78
1	103	91	-1.74	-2.79	-2.31	-2.22	-0.53	548.00	-23.03	532.34	-7.37	93.27
1	103	92	-1.84	-5.89	-1.84	-5.89	9.28e-02	672.47	203.13	592.86	282.74	176.15
1	103	93	-1.04	-5.90	-1.07	-5.87	-0.39	680.56	198.70	592.08	287.17	186.56
1	103	94	-1.22	-5.63	-1.24	-5.62	-0.27	760.85	153.67	698.95	215.58	183.73
1	103	95	-1.33	-5.39	-1.34	-5.39	-0.15	780.50	134.78	698.91	216.38	214.54
1	103	96	-0.78	-5.01	-0.80	-4.99	-0.31	912.94	-117.83	883.45	-88.34	171.82
1	103	97	-0.80	-4.91	-0.80	-4.91	8.72e-02	925.96	-137.66	882.89	-94.58	209.67
1	103	98	-0.78	-2.34	-0.88	-2.23	-0.39	1033.14	-217.00	1023.94	-207.81	106.82
1	103	99	-0.82	-2.30	-0.90	-2.22	0.33	1026.29	-222.36	1020.05	-216.12	88.03
1	103	100	-0.64	-1.55	-0.83	-1.36	0.37	44.47	-76.74	39.40	-71.67	24.27
1	103	101	-0.94	-1.64	-1.19	-1.39	-0.33	19.52	-52.49	15.16	-48.13	-17.17
1	103	102	-0.81	-5.70	-0.81	-5.70	9.91e-02	392.99	99.58	135.32	357.25	95.97
1	103	103	-1.70	-5.61	-1.70	-5.61	-2.89e-02	386.55	128.16	174.54	340.17	99.16
1	103	104	-0.60	-5.45	-0.60	-5.45	5.42e-02	349.37	162.56	162.58	349.35	-1.96
1	103	105	-1.25	-5.39	-1.25	-5.38	0.14	328.56	203.58	204.05	328.09	-7.65
1	103	106	-0.82	-4.40	-0.84	-4.38	-0.24	115.70	-5.46	99.18	11.06	-41.58
1	103	107	-0.39	-4.62	-0.39	-4.62	-4.70e-02	137.41	-85.53	54.35	-2.47	-107.79
1	103	108	-0.48	-2.10	-0.57	-2.01	-0.38	184.87	-133.62	125.98	-74.73	123.64
1	103	109	-8.25e-02	-2.15	-0.14	-2.10	0.34	191.34	-257.89	88.21	-154.76	188.93
1	103	110	-0.91	-1.24	-1.06	-1.10	-0.16	59.12	8.01	53.84	13.29	15.56

Viale Duca Alessandro n. 11 – 43123 Parma
Cell. 335 1403156 – E mail ing.concari@gmail.com
Sito web: studioaire.it – P.IVA 02561480340

1	103	111	-0.52	-1.75	-0.82	-1.46	-0.52	-55.14	-151.09	-63.57	-142.66	27.17
1	103	112	-0.63	-1.78	-0.63	-1.78	-6.33e-03	147.21	56.00	143.80	59.41	17.30
1	103	113	-0.79	-1.28	-0.94	-1.13	0.23	136.53	-1.99	132.56	1.97	23.11
1	103	114	-0.75	-1.74	-0.75	-1.74	-2.63e-02	240.45	26.23	237.12	29.56	26.50
1	103	115	-0.30	-2.86	-0.31	-2.85	0.13	136.20	-362.09	92.73	-318.62	140.60
1	103	116	-0.70	-2.29	-1.60	-1.39	0.79	181.19	-10.42	169.04	1.73	46.70
1	103	117	-1.12	-2.31	-2.19	-1.24	0.36	424.40	-15.62	421.25	-12.47	37.11
1	103	118	-1.13	-2.30	-2.18	-1.25	-0.36	431.19	-15.35	428.54	-12.69	34.31
1	103	119	-0.71	-2.38	-1.68	-1.41	-0.82	78.68	10.94	78.63	10.99	-1.78
1	103	120	-0.27	-2.37	-0.35	-2.29	-0.40	173.92	-517.04	173.87	-516.99	5.86
1	103	121	-1.44	-4.32	-1.53	-4.24	-0.48	583.70	63.36	542.47	104.58	140.54
1	103	122	0.58	-2.79	0.58	-2.79	-3.18e-02	-467.64	-1983.92	-546.68	-1904.87	337.05
1	103	123	-0.65	-3.88	-0.66	-3.87	0.20	1055.70	-351.05	1039.28	-334.63	151.09
1	103	124	-0.61	-3.95	-0.65	-3.91	-0.37	1052.85	-338.90	1038.73	-324.79	139.44
1	103	125	0.83	-1.75	-0.28	-0.64	-1.28	12.26	-19.47	-17.12	9.92	-8.30
1	103	126	-1.03	-2.21	-1.51	-1.74	-0.58	145.59	-16.95	143.30	-14.67	-19.14
1	103	127	-1.33	-2.22	-1.81	-1.74	0.44	968.50	-47.23	964.35	-43.08	64.75
1	103	128	-0.95	-2.35	-1.60	-1.70	0.70	290.64	-30.29	273.26	-12.91	72.63
1	103	129	-1.33	-2.19	-1.78	-1.75	-0.43	972.87	-44.53	972.12	-43.79	27.49
1	103	130	0.84	-3.56	0.83	-3.56	0.18	-313.67	-1379.46	-313.67	-1379.46	-5.27e-02
1	103	131	-0.53	-4.49	-0.56	-4.46	0.33	176.81	-102.53	19.04	55.25	138.49
1	103	132	-0.15	-2.77	-0.15	-2.76	-0.15	-63.73	-593.76	-65.12	-592.37	27.09
1	104	2	0.37	-3.42	0.37	-3.41	-0.13	-1064.34	-1667.49	-1064.44	-1667.39	-7.75
1	104	6	-0.34	-2.79	-0.42	-2.70	0.45	-486.91	-750.16	-490.94	-746.14	32.30
1	104	7	-1.45	-4.36	-1.59	-4.21	0.64	560.24	43.65	517.83	86.06	141.81
1	104	8	-0.78	-4.47	-0.80	-4.45	-0.29	135.17	-196.76	-42.33	-19.26	165.56
1	104	32	-0.21	-2.79	-0.23	-2.76	-0.24	-201.78	-530.30	-300.50	-431.58	150.62
1	104	33	0.25	-2.62	0.23	-2.61	-0.19	-1353.48	-2441.70	-1500.72	-2294.47	372.21
1	104	39	-0.90	-4.75	-0.98	-4.67	-0.55	-8.07	-131.08	-59.39	-79.76	60.66
1	104	40	-0.59	-5.98	-0.60	-5.96	0.30	368.09	-41.38	-36.33	363.04	45.20
1	104	41	-0.64	-5.59	-0.64	-5.58	8.82e-02	370.05	-39.69	-39.50	369.85	-9.02
1	104	42	-0.68	-4.11	-0.75	-4.04	0.49	-116.86	-192.21	-121.78	-187.29	18.61
1	104	43	-0.40	-2.51	-0.44	-2.47	0.30	321.61	-1074.02	321.17	-1073.58	-24.82
1	104	44	-7.48e-02	-2.28	-0.77	-1.58	1.02	-132.57	-373.35	-132.65	-373.27	4.33
1	104	45	0.88	-2.38	-0.35	-1.15	1.58	34.91	-90.61	-66.54	10.85	49.41
1	104	46	0.75	-1.80	-0.37	-0.68	1.26	7.81	-23.09	-18.09	2.80	11.39
1	104	47	-0.38	-1.61	-0.74	-1.26	0.55	10.55	-72.58	-62.16	0.13	27.52
1	104	48	-0.24	-2.38	-0.45	-2.16	0.65	165.36	-227.32	148.06	-210.03	80.58
1	104	49	-0.93	-3.45	-0.95	-3.43	0.23	240.73	-84.78	-70.35	226.30	66.98
1	104	50	-0.56	-3.98	-0.57	-3.97	-0.17	567.42	-60.51	-37.31	544.22	118.46
1	104	51	-0.71	-3.60	-0.72	-3.59	-0.20	489.88	-109.70	-40.72	420.90	191.31
1	104	52	-0.16	-2.18	-0.29	-2.06	-0.49	-75.61	-366.82	-150.19	-292.23	127.11
1	104	53	-0.21	-1.97	-0.53	-1.64	0.69	456.36	-1581.96	429.18	-1554.79	233.78
1	104	54	0.13	-2.33	-0.83	-1.38	-1.20	-157.24	-698.06	-164.17	-691.13	60.83
1	104	55	0.91	-2.46	-0.33	-1.22	-1.63	45.26	-117.94	-86.59	13.92	-64.29
1	104	56	-0.90	-1.89	-1.80	-0.99	-0.28	280.36	-3.23	279.57	-2.43	14.99
1	104	57	-1.35	-1.52	-1.36	-1.52	-2.93e-02	319.33	-87.37	318.72	-86.76	-15.74
1	104	58	-0.98	-2.84	-1.03	-2.79	0.28	415.70	-150.40	407.34	-142.03	68.30
1	104	59	-1.74	-4.19	-1.75	-4.19	-8.00e-02	491.53	-39.96	421.80	29.78	179.45

Viale Duca Alessandro n. 11 – 43123 Parma
Cell. 335 1403156 – E mail ing.concari@gmail.com
Sito web: studioaire.it – P.IVA 02561480340

1	104	60	-2.06	-5.48	-2.07	-5.46	0.22	513.67	193.24	434.35	272.55	138.29
1	104	61	-1.23	-5.66	-1.23	-5.66	-0.16	520.04	239.40	512.23	247.21	46.16
1	104	62	-0.48	-5.10	-0.51	-5.07	-0.39	634.53	-131.07	627.88	-124.42	-71.05
1	104	63	-0.29	-3.88	-0.29	-3.88	-7.68e-02	841.26	-450.35	837.22	-446.30	72.16
1	104	64	-0.96	-1.73	-1.25	-1.43	0.38	727.05	-22.20	720.34	-15.48	70.62
1	104	65	-0.62	-2.28	-0.62	-2.28	6.52e-02	792.72	-302.63	742.78	-252.68	228.50
1	104	66	-0.86	-1.76	-1.64	-0.99	0.31	366.24	-14.60	359.60	-7.96	49.87
1	104	67	-1.39	-1.58	-1.39	-1.57	2.31e-02	432.02	-73.86	391.79	-33.63	136.88
1	104	68	-0.93	-2.91	-1.08	-2.76	-0.53	488.05	-40.96	464.33	-17.24	109.49
1	104	69	-1.33	-4.08	-1.34	-4.07	-0.14	498.36	134.41	465.52	167.25	104.28
1	104	70	-1.55	-4.86	-1.63	-4.78	-0.51	643.30	186.20	476.61	352.88	220.02
1	104	71	-1.21	-4.58	-1.22	-4.58	0.16	757.77	28.04	518.49	267.32	342.57
1	104	72	-1.00	-1.75	-1.28	-1.47	-0.36	625.00	-8.40	624.88	-8.28	8.75
1	104	73	-0.75	-2.21	-0.76	-2.20	0.10	681.54	-371.79	676.31	-366.57	-73.98
1	104	74	-0.39	-3.43	-0.39	-3.43	-6.08e-02	859.67	-644.13	828.86	-613.31	213.06
1	104	75	-0.47	-4.25	-0.52	-4.20	0.44	816.67	-404.94	603.33	-191.60	463.80
1	104	76	-0.79	-1.56	-0.90	-1.45	0.27	197.66	-57.39	104.04	36.23	122.93
1	104	77	-0.65	-1.47	-0.74	-1.39	-0.25	166.40	-30.28	109.77	26.36	89.06
1	104	78	-0.87	-3.84	-0.87	-3.84	6.65e-03	318.84	72.66	125.57	265.93	101.12
1	104	79	-0.96	-3.66	-0.97	-3.65	-0.15	401.30	56.06	128.07	329.28	140.27
1	104	80	-1.33	-4.04	-1.33	-4.04	9.79e-03	605.35	87.61	227.06	465.90	229.68
1	104	81	-0.72	-4.11	-0.72	-4.11	3.14e-02	631.81	47.20	183.48	495.53	247.18
1	104	82	-1.23	-3.75	-1.23	-3.75	6.51e-02	669.05	-85.44	212.07	371.53	368.72
1	104	83	-0.59	-3.75	-0.60	-3.75	0.15	671.52	-116.70	164.14	390.68	377.48
1	104	84	-0.60	-3.03	-0.62	-3.02	0.21	420.23	-488.49	-13.38	-54.88	453.88
1	104	85	-0.72	-2.76	-0.76	-2.72	0.27	364.88	-419.97	63.50	-118.58	381.72
1	104	86	0.10	-2.19	9.51e-02	-2.18	-0.15	-54.86	-339.77	-76.28	-318.36	-75.11
1	104	87	-0.44	-2.20	-0.52	-2.12	0.37	11.20	-155.86	10.81	-155.48	7.97
1	104	88	-1.31	-1.91	-1.77	-1.45	0.25	475.39	-47.85	467.91	-40.37	62.10
1	104	89	-1.18	-2.02	-1.68	-1.52	-0.41	483.68	-46.77	473.48	-36.57	72.85
1	104	90	-1.67	-2.37	-1.79	-2.25	0.26	547.19	-29.28	531.85	-13.94	92.78
1	104	91	-1.74	-2.79	-2.31	-2.22	-0.53	548.00	-23.03	532.34	-7.37	93.27
1	104	92	-1.84	-5.89	-1.84	-5.89	9.28e-02	672.47	203.13	592.86	282.74	176.15
1	104	93	-1.04	-5.90	-1.07	-5.87	-0.39	680.56	198.70	592.08	287.17	186.56
1	104	94	-1.22	-5.63	-1.24	-5.62	-0.27	760.85	153.67	698.95	215.58	183.73
1	104	95	-1.33	-5.39	-1.34	-5.39	-0.15	780.50	134.78	698.91	216.38	214.54
1	104	96	-0.78	-5.01	-0.80	-4.99	-0.31	912.94	-117.83	883.45	-88.34	171.82
1	104	97	-0.80	-4.91	-0.80	-4.91	8.72e-02	925.96	-137.66	882.89	-94.58	209.67
1	104	98	-0.78	-2.34	-0.88	-2.23	-0.39	1033.14	-217.00	1023.94	-207.81	106.82
1	104	99	-0.82	-2.30	-0.90	-2.22	0.33	1026.29	-222.36	1020.05	-216.12	88.03
1	104	100	-0.64	-1.55	-0.83	-1.36	0.37	44.47	-76.74	39.40	-71.67	24.27
1	104	101	-0.94	-1.64	-1.19	-1.39	-0.33	19.52	-52.49	15.16	-48.13	-17.17
1	104	102	-0.81	-5.70	-0.81	-5.70	9.91e-02	392.99	99.58	135.32	357.25	95.97
1	104	103	-1.70	-5.61	-1.70	-5.61	-2.89e-02	386.55	128.16	174.54	340.17	99.16
1	104	104	-0.60	-5.45	-0.60	-5.45	5.42e-02	349.37	162.56	162.58	349.35	-1.96
1	104	105	-1.25	-5.39	-1.25	-5.38	0.14	328.56	203.58	204.05	328.09	-7.65
1	104	106	-0.82	-4.40	-0.84	-4.38	-0.24	115.70	-5.46	99.18	11.06	-41.58
1	104	107	-0.39	-4.62	-0.39	-4.62	-4.70e-02	137.41	-85.53	54.35	-2.47	-107.79

Viale Duca Alessandro n. 11 – 43123 Parma
Cell. 335 1403156 – E mail ing.concari@gmail.com
Sito web: studioaire.it – P.IVA 02561480340

1	104	108	-0.48	-2.10	-0.57	-2.01	-0.38	184.87	-133.62	125.98	-74.73	123.64
1	104	109	-8.25e-02	-2.15	-0.14	-2.10	0.34	191.34	-257.89	88.21	-154.76	188.93
1	104	110	-0.91	-1.24	-1.06	-1.10	-0.16	59.12	8.01	53.84	13.29	15.56
1	104	111	-0.52	-1.75	-0.82	-1.46	-0.52	-55.14	-151.09	-63.57	-142.66	27.17
1	104	112	-0.63	-1.78	-0.63	-1.78	-6.33e-03	147.21	56.00	143.80	59.41	17.30
1	104	113	-0.79	-1.28	-0.94	-1.13	0.23	136.53	-1.99	132.56	1.97	23.11
1	104	114	-0.75	-1.74	-0.75	-1.74	-2.63e-02	240.45	26.23	237.12	29.56	26.50
1	104	115	-0.30	-2.86	-0.31	-2.85	0.13	136.20	-362.09	92.73	-318.62	140.60
1	104	116	-0.70	-2.29	-1.60	-1.39	0.79	181.19	-10.42	169.04	1.73	46.70
1	104	117	-1.12	-2.31	-2.19	-1.24	0.36	424.40	-15.62	421.25	-12.47	37.11
1	104	118	-1.13	-2.30	-2.18	-1.25	-0.36	431.19	-15.35	428.54	-12.69	34.31
1	104	119	-0.71	-2.38	-1.68	-1.41	-0.82	78.68	10.94	78.63	10.99	-1.78
1	104	120	-0.27	-2.37	-0.35	-2.29	-0.40	173.92	-517.04	173.87	-516.99	5.86
1	104	121	-1.44	-4.32	-1.53	-4.24	-0.48	583.70	63.36	542.47	104.58	140.54
1	104	122	0.58	-2.79	0.58	-2.79	-3.18e-02	-467.64	-1983.92	-546.68	-1904.87	337.05
1	104	123	-0.65	-3.88	-0.66	-3.87	0.20	1055.70	-351.05	1039.28	-334.63	151.09
1	104	124	-0.61	-3.95	-0.65	-3.91	-0.37	1052.85	-338.90	1038.73	-324.79	139.44
1	104	125	0.83	-1.75	-0.28	-0.64	-1.28	12.26	-19.47	-17.12	9.92	-8.30
1	104	126	-1.03	-2.21	-1.51	-1.74	-0.58	145.59	-16.95	143.30	-14.67	-19.14
1	104	127	-1.33	-2.22	-1.81	-1.74	0.44	968.50	-47.23	964.35	-43.08	64.75
1	104	128	-0.95	-2.35	-1.60	-1.70	0.70	290.64	-30.29	273.26	-12.91	72.63
1	104	129	-1.33	-2.19	-1.78	-1.75	-0.43	972.87	-44.53	972.12	-43.79	27.49
1	104	130	0.84	-3.56	0.83	-3.56	0.18	-313.67	-1379.46	-313.67	-1379.46	-5.27e-02
1	104	131	-0.53	-4.49	-0.56	-4.46	0.33	176.81	-102.53	19.04	55.25	138.49
1	104	132	-0.15	-2.77	-0.15	-2.76	-0.15	-63.73	-593.76	-65.12	-592.37	27.09
1	153	2	-1.08	-1.97	-1.97	-1.08	3.93e-02	-571.61	-882.18	-790.95	-662.84	141.46
1	153	6	6.71e-02	-2.67	-2.52	-8.43e-02	-0.63	-247.30	-1115.15	-1112.57	-249.87	47.19
1	153	7	-0.40	-0.89	-0.78	-0.50	-0.20	278.60	-262.43	100.86	-84.68	254.11
1	153	8	-1.59	-3.47	-2.17	-2.89	-0.86	19.66	-128.38	-55.93	-52.80	-74.00
1	153	32	2.17	0.75	2.14	0.79	-0.22	969.25	-121.45	920.73	-72.93	224.86
1	153	33	3.70	0.43	3.69	0.44	-0.15	-424.63	-1354.71	-536.52	-1242.82	302.56
1	153	39	1.45	-2.73	-1.17	-0.11	-2.02	30.81	-533.98	-521.06	17.88	-84.46
1	153	40	2.95	1.37	1.41	2.92	-0.23	63.90	-311.58	-79.51	-168.17	182.44
1	153	41	0.28	-1.48	5.73e-02	-1.25	0.59	152.53	-327.59	-81.02	-94.03	239.97
1	153	42	-0.44	-6.15	-0.67	-5.91	1.13	194.15	-474.84	-312.44	31.74	286.83
1	153	43	1.27	-3.37	1.27	-3.37	-3.33e-02	1099.09	130.53	1075.09	154.53	150.57
1	153	44	-0.43	-2.44	-0.45	-2.42	-0.20	74.56	-289.10	-288.41	73.88	15.74
1	153	45	-0.21	-2.09	-0.30	-2.00	-0.41	163.89	-17.74	33.10	113.04	-81.54
1	153	46	1.74	-7.85e-02	-2.71e-02	1.68	0.30	285.52	-99.38	64.61	121.53	190.34
1	153	47	2.36	0.55	0.60	2.31	0.29	489.79	-90.43	389.94	9.41	219.01
1	153	48	1.01	-1.26	-1.22	0.97	-0.30	-432.96	-834.05	-829.85	-437.16	40.84
1	153	49	1.47	-0.65	0.15	0.68	-1.03	419.70	257.75	354.40	323.05	79.45
1	153	50	-0.34	-1.50	-0.40	-1.44	-0.26	962.15	-134.32	61.30	766.53	419.79
1	153	51	0.62	-0.25	4.01e-02	0.33	0.41	1081.70	-218.91	87.42	775.38	551.88
1	153	52	3.64	0.20	0.76	3.08	1.27	482.95	-540.08	213.51	-270.64	450.61
1	153	53	2.59	-1.46	-1.46	2.59	-5.12e-02	-1053.13	-1901.88	-1151.62	-1803.38	271.84
1	153	54	2.56	0.71	0.85	2.42	-0.49	203.58	-858.66	185.92	-841.01	135.81
1	153	55	2.07	0.19	0.42	1.84	-0.62	-21.77	-435.49	-108.47	-348.79	-

Viale Duca Alessandro n. 11 – 43123 Parma
Cell. 335 1403156 – E mail ing.concari@gmail.com
Sito web: studioaire.it – P.IVA 02561480340

168.38											
1	153	56	1.72	-0.49	0.55	0.69	1.10	159.69	-302.74	-190.73	47.68
198.12											
1	153	57	1.52	-2.89	-2.41	1.04	1.37	-14.19	-272.30	-233.70	-52.79
92.05											
1	153	58	1.25	-2.72	-2.51	1.04	0.89	-139.59	-550.66	-502.76	-187.49
131.90											
1	153	59	-0.28	-1.78	-1.36	-0.70	-0.67	155.83	-285.79	-26.69	-103.28
217.46											
1	153	60	-0.43	-3.17	-0.53	-3.07	0.52	256.27	-186.78	72.09	-2.61
218.35											
1	153	61	0.47	-4.05	-0.13	-3.45	1.53	368.58	-110.86	138.27	119.45
239.54											
1	153	62	0.22	-2.76	-1.05	-1.49	1.47	226.33	-255.17	147.79	-176.63
177.90											
1	153	63	-0.16	-1.82	-1.64	-0.34	0.51	204.54	-427.41	44.83	-267.70
274.63											
1	153	64	1.26	4.50e-02	1.14	0.16	-0.36	245.52	48.09	243.03	50.59
22.07											
1	153	65	3.66e-02	-1.25	-1.19	-2.08e-02	-0.27	321.96	-183.45	209.45	-70.94
210.25											
1	153	66	0.20	-0.53	-0.18	-0.15	0.37	508.80	-98.75	421.55	-11.50
213.06											
1	153	67	1.25	-1.93e-02	1.17	6.10e-02	0.31	627.63	-33.47	515.27	78.89
248.30											
1	153	68	1.91	-0.54	1.76	-0.38	-0.59	970.78	178.99	862.78	286.99
271.75											
1	153	69	3.65	-2.53	1.12	2.02e-03	-3.04	817.15	112.87	588.19	341.83
329.89											
1	153	70	0.82	-0.53	-0.35	0.64	-0.46	840.51	23.79	462.97	401.33
407.19											
1	153	71	1.75	-0.51	0.91	0.34	1.09	891.11	-299.60	446.16	145.36
576.04											
1	153	72	0.23	-1.22	-0.28	-0.71	-0.69	499.72	-143.42	499.26	-142.96 -
17.21											
1	153	73	3.11	-0.61	3.10	-0.60	-0.20	584.69	-315.72	583.03	-314.06
38.60											
1	153	74	4.11	-0.82	4.05	-0.76	0.51	1045.28	-463.84	945.18	-363.74
375.55											
1	153	75	3.80	-0.98	3.13	-0.31	1.66	855.57	-621.81	535.15	-301.38
608.86											
1	153	76	1.49	-0.21	1.36	-8.66e-02	0.45	415.41	-261.23	150.90	3.28
330.17											
1	153	77	0.72	-0.45	0.58	-0.31	0.38	492.15	-307.49	199.05	-14.39
385.32											
1	153	78	2.78	-0.94	1.65	0.19	-1.71	388.50	77.37	135.25	330.62
121.08											
1	153	79	1.56	-1.36	0.43	-0.22	-1.42	370.52	111.99	123.19	359.32
52.63											
1	153	80	1.18	-0.79	-0.35	0.74	-0.82	1010.36	6.48	422.21	594.62
494.48											
1	153	81	0.32	-0.72	-7.61e-02	-0.32	-0.50	989.23	-40.01	306.66	642.56
486.44											
1	153	82	1.69	-1.01	0.22	0.46	1.34	1125.76	-187.87	382.36	555.53
651.08											
1	153	83	0.88	-1.06	0.34	-0.52	0.87	1050.18	-242.95	260.88	546.35
630.61											
1	153	84	5.36	1.08	3.07	3.37	2.13	576.21	-823.10	-23.45	-223.44
692.47											
1	153	85	3.82	-2.72e-02	1.26	2.53	1.81	607.76	-788.61	55.22	-236.07
682.82											
1	153	86	3.57	-0.39	3.44	-0.26	-0.70	-42.80	-675.87	-137.08	-581.59 -
225.38											
1	153	87	2.06	-7.27e-02	1.40	0.59	-0.98	20.73	-818.01	-64.26	-733.02 -
253.10											
1	153	88	0.82	-1.53	-0.65	-6.15e-02	1.13	99.46	-113.88	17.68	-32.09
103.73											
1	153	89	0.92	-0.29	0.69	-5.12e-02	0.48	411.54	-41.28	323.90	46.37
178.90											
1	153	90	0.34	-1.55	-0.54	-0.68	0.95	312.95	-166.27	197.33	-50.65
205.04											
1	153	91	0.43	-1.03	0.27	-0.86	0.47	482.71	-90.29	311.52	80.90
262.27											
1	153	92	0.54	-1.43	-0.70	-0.19	0.95	496.18	-227.05	238.98	30.15
346.21											
1	153	93	0.68	-1.36	-0.63	-4.80e-02	0.98	537.28	-70.15	364.68	102.45
273.96											
1	153	94	0.58	-3.01	-0.21	-2.22	1.49	546.45	-251.07	305.23	-9.85
366.33											
1	153	95	1.22	-1.38	7.98e-02	-0.24	1.29	760.15	-218.28	412.51	129.36
468.28											
1	153	96	0.94	-1.97	2.49e-02	-1.05	1.36	553.23	-383.60	344.93	-175.31
389.55											
1	153	97	2.07	-1.32	1.27	-0.53	1.44	770.90	-264.64	563.38	-57.12
414.52											
1	153	98	0.28	-0.57	0.10	-0.40	-0.34	464.61	-224.37	396.41	-156.18
205.76											
1	153	99	1.41	-0.52	1.25	-0.36	-0.54	684.94	-164.87	637.84	-117.76
194.45											
1	153	100	2.15	-1.48	-0.77	1.44	1.44	519.25	-360.21	-69.61	228.64
413.67											
1	153	101	0.85	-3.22	-2.14	-0.23	1.79	340.19	-266.69	-40.12	113.62

Viale Duca Alessandro n. 11 – 43123 Parma
Cell. 335 1403156 – E mail ing.concari@gmail.com
Sito web: studioaire.it – P.IVA 02561480340

293.54												
1	153	102	0.79	-0.38	0.78	-0.37	-0.10	102.32	-296.81	-157.86	-36.63	
190.13												
1	153	103	-8.68e-02	-0.41	-0.17	-0.33	0.14	81.86	-344.88	-227.67	-35.35	
190.47												
1	153	104	0.14	-4.04	-0.23	-3.67	1.18	210.17	-266.58	-61.06	4.65	
236.10												
1	153	105	0.29	-5.84	-0.29	-5.26	1.79	210.41	-306.21	-102.56	6.76	
252.46												
1	153	106	-0.26	-3.73	-0.81	-3.17	1.28	437.59	-301.97	24.26	111.37	
367.21												
1	153	107	-0.78	-5.48	-1.43	-4.83	1.62	396.86	-224.32	78.27	94.27	
310.48												
1	153	108	0.18	-1.20	-0.74	-0.27	-0.65	223.10	46.15	96.83	172.42	-
79.99												
1	153	109	-0.17	-1.79	-1.63	-0.33	-0.49	130.64	115.69	126.20	120.14	6.83
1	153	110	1.31	-0.70	0.28	0.33	1.00	86.63	-385.68	-353.15	54.09	
119.62												
1	153	111	-0.39	-2.22	-0.62	-1.99	0.60	139.89	-577.86	-548.66	110.69	
141.79												
1	153	112	0.40	-1.45	-6.98e-02	-0.99	-0.80	286.94	-73.05	276.21	-62.33	-
61.21												
1	153	113	-3.93e-02	-0.84	-0.67	-0.21	0.33	426.45	-31.36	367.98	27.12	
152.81												
1	153	114	0.89	-0.35	0.43	0.11	-0.60	32.03	-30.49	-30.41	31.95	2.17
1	153	115	4.55	0.84	4.48	0.90	-0.49	2161.81	215.36	2129.09	248.08	
250.24												
1	153	116	0.18	-1.67	-1.38	-0.11	0.67	627.94	-9.91	523.75	94.28	
235.80												
1	153	117	1.64	4.31e-02	0.98	0.70	0.79	216.51	-160.92	49.71	5.88	
187.44												
1	153	118	1.40	-0.23	1.19	-2.36e-02	0.54	350.64	-85.95	251.62	13.07	
182.83												
1	153	119	2.02	-1.34	0.15	0.52	1.67	15.69	-607.73	-556.46	-35.58	
171.28												
1	153	120	2.86	-1.70	2.83	-1.67	-0.36	1604.07	469.66	1541.86	531.87	
258.26												
1	153	121	0.11	-1.21	-0.59	-0.51	0.66	611.49	-98.12	402.91	110.45	
323.27												
1	153	122	7.59	3.31	7.51	3.39	0.58	1014.65	-1033.12	943.70	-962.17	
374.50												
1	153	123	2.04	-0.99	1.73	-0.68	0.92	715.91	-301.09	606.68	-191.87	
314.89												
1	153	124	0.49	-1.15	9.33e-02	-0.75	0.71	576.20	-378.75	465.38	-267.93	
305.85												
1	153	125	0.18	-1.90	-0.12	-1.60	0.73	281.45	-206.69	-60.59	135.34	
223.54												
1	153	126	0.80	-2.06	-0.29	-0.98	-1.39	427.25	-44.96	416.10	-33.82	-
71.68												
1	153	127	0.52	-0.58	0.29	-0.35	-0.44	558.54	-60.66	534.60	-36.72	
119.38												
1	153	128	1.55	-0.49	0.75	0.31	-1.00	6.57	-102.04	-101.99	6.52	-2.26
1	153	129	0.13	-0.86	-0.64	-8.92e-02	-0.41	433.70	-56.45	408.50	-31.25	
108.23												
1	153	130	-2.83	-4.27	-4.14	-2.96	0.42	-655.94	-1295.81	-1258.98	-692.78	
149.04												
1	153	131	4.56	-2.29	-1.84	4.12	-1.69	34.67	-473.81	-62.91	-376.23	-
200.24												
1	153	132	-1.42	-6.45	-6.40	-1.47	0.51	-547.67	-2214.98	-2213.38	-549.27	
51.63												
1	185	2	-0.43	-0.75	-0.75	-0.43	1.01e-02	-594.94	-751.12	-629.10	-716.96	
64.56												
1	185	6	8.88e-02	-1.06	-0.99	2.41e-02	-0.26	-345.86	-645.91	-639.63	-352.13	
42.93												
1	185	7	-2.47e-02	-0.32	-0.18	-0.17	-0.15	233.09	-136.88	154.95	-58.74	
151.00												
1	185	8	-0.55	-1.47	-0.77	-1.25	-0.40	-25.40	-64.91	-41.41	-48.90	
19.39												
1	185	32	1.10	0.38	1.09	0.39	-8.26e-02	333.04	-222.90	301.94	-191.79	
127.77												
1	185	33	1.74	0.27	1.73	0.27	-7.65e-02	-566.99	-1217.61	-637.16	-1147.44	
201.81												
1	185	39	0.64	-1.08	-0.42	-2.26e-02	-0.84	-29.44	-248.40	-246.85	-30.99	-
18.36												
1	185	40	1.12	0.56	0.57	1.11	-9.34e-02	83.78	-116.62	-44.78	11.94	
96.10												
1	185	41	7.76e-02	-0.75	-8.43e-03	-0.66	0.25	121.54	-114.43	-45.61	52.72	
107.26												
1	185	42	-0.13	-2.61	-0.22	-2.52	0.46	52.28	-250.41	-165.52	-32.60	
135.97												
1	185	43	0.55	-1.40	0.55	-1.40	-7.42e-02	550.47	-202.53	545.14	-197.21	
63.09												
1	185	44	-0.15	-1.00	-0.15	-0.99	-4.19e-02	-59.28	-157.38	-157.14	-59.52	4.85
1	185	45	-0.14	-0.94	-0.18	-0.90	-0.17	61.37	-10.04	-0.57	51.90	-
24.22												
1	185	46	0.74	-9.38e-02	-7.35e-02	0.72	0.13	127.88	-52.29	21.19	54.40	
88.54												
1	185	47	1.13	0.30	0.33	1.09	0.17	201.20	-63.42	151.08	-13.29	
103.69												
1	185	48	0.54	-0.56	-0.55	0.52	-0.12	-262.67	-335.58	-316.52	-281.73	
32.03												
1	185	49	0.79	-0.25	0.14	0.40	-0.50	218.76	102.88	134.00	187.64	

Viale Duca Alessandro n. 11 – 43123 Parma
Cell. 335 1403156 – E mail ing.concari@gmail.com
Sito web: studioaire.it – P.IVA 02561480340

51.36												
1	185	50	-0.18	-0.69	-0.21	-0.66	-0.12	555.30	-67.77	16.57	470.95	
213.17												
1	185	51	0.29	-0.12	-1.80e-02	0.18	0.18	590.92	-122.40	27.08	441.44	
290.32												
1	185	52	1.82	0.18	0.43	1.56	0.59	186.17	-350.13	57.08	-221.04	
229.27												
1	185	53	1.28	-0.66	-0.66	1.27	7.77e-02	-370.52	-1224.09	-400.99	-1193.62	
158.37												
1	185	54	1.23	0.33	0.42	1.14	-0.27	53.47	-540.01	42.59	-529.12	
79.64												
1	185	55	0.89	4.05e-02	0.14	0.79	-0.28	-10.56	-206.32	-66.68	-150.20	-
88.52												
1	185	56	0.85	-9.37e-02	0.45	0.30	0.47	101.52	-82.48	-1.14	20.18	
91.38												
1	185	57	0.61	-1.01	-0.83	0.42	0.51	10.77	-75.50	-9.77	-54.97	
36.74												
1	185	58	0.50	-0.98	-0.90	0.42	0.33	-38.91	-209.12	-107.03	-141.01	
83.39												
1	185	59	-0.11	-0.61	-0.45	-0.26	-0.23	194.15	-150.46	105.72	-62.04	
150.51												
1	185	60	-9.97e-02	-1.26	-0.12	-1.23	0.17	242.24	-42.05	142.84	57.34	
135.57												
1	185	61	0.24	-1.61	2.45e-02	-1.39	0.59	279.35	25.24	190.48	114.10	
121.18												
1	185	62	0.13	-1.03	-0.32	-0.59	0.56	231.96	-122.35	220.69	-111.07	
62.20												
1	185	63	-5.36e-02	-0.62	-0.55	-0.13	0.19	268.69	-274.57	229.61	-235.50	
140.35												
1	185	64	0.60	2.34e-02	0.56	6.51e-02	-0.15	284.61	15.98	281.97	18.61	
26.48												
1	185	65	2.12e-02	-0.44	-0.40	-2.09e-02	-0.13	325.85	-149.69	272.34	-96.19	
150.27												
1	185	66	0.22	-0.18	0.11	-7.19e-02	0.18	324.09	-42.10	289.47	-7.47	
107.15												
1	185	67	0.80	-5.02e-02	0.75	3.36e-03	0.21	395.49	-39.46	339.02	17.01	
146.20												
1	185	68	1.02	-0.23	1.00	-0.20	-0.18	555.08	56.40	510.24	101.24	
142.66												
1	185	69	1.72	-1.00	0.67	4.76e-02	-1.32	478.52	81.18	386.52	173.18	
167.61												
1	185	70	0.48	-7.97e-02	-4.43e-02	0.44	-0.14	532.41	51.46	327.29	256.58	
237.86												
1	185	71	0.94	-0.16	0.47	0.30	0.54	584.69	-130.45	326.98	127.27	
343.35												
1	185	72	0.14	-0.53	-7.00e-02	-0.32	-0.31	372.26	-64.87	372.14	-64.76	-6.96
1	185	73	1.48	-0.28	1.48	-0.28	-6.69e-02	420.05	-230.19	419.98	-230.13	-6.40
1	185	74	1.97	-0.33	1.95	-0.30	0.25	669.48	-371.37	623.36	-325.25	
214.19												
1	185	75	1.87	-0.38	1.52	-3.74e-02	0.81	578.53	-386.50	384.66	-192.62	
386.67												
1	185	76	0.84	-9.39e-02	0.78	-2.99e-02	0.24	230.74	-138.22	91.26	1.25	
178.91												
1	185	77	0.38	-0.18	0.32	-0.12	0.17	258.60	-145.35	116.12	-2.87	
193.01												
1	185	78	1.34	-0.32	0.89	0.13	-0.74	239.73	54.73	92.08	202.38	
74.26												
1	185	79	0.71	-0.54	0.24	-6.73e-02	-0.61	247.36	69.24	89.29	227.31	
56.30												
1	185	80	0.60	-0.28	-0.12	0.44	-0.34	591.10	28.41	245.40	374.11	
273.88												
1	185	81	0.19	-0.24	1.35e-02	-7.22e-02	-0.21	589.50	-3.04	183.35	403.11	
275.14												
1	185	82	0.89	-0.43	0.12	0.34	0.65	659.39	-106.82	220.19	332.38	
378.97												
1	185	83	0.49	-0.43	0.18	-0.13	0.43	629.77	-137.78	156.74	335.25	
373.25												
1	185	84	2.57	0.54	1.46	1.65	1.01	349.50	-498.72	-20.12	-129.10	
420.59												
1	185	85	1.83	3.70e-02	0.60	1.27	0.83	358.89	-457.09	33.96	-132.16	
399.44												
1	185	86	1.71	-0.18	1.67	-0.13	-0.28	-29.50	-374.73	-76.63	-327.59	-
118.54												
1	185	87	0.91	-1.60e-02	0.66	0.23	-0.41	7.27	-402.23	-24.30	-370.65	-
109.24												
1	185	88	0.44	-0.56	-4.08e-02	-8.00e-02	0.50	163.59	-50.15	143.37	-29.94	
62.54												
1	185	89	0.62	-0.15	0.53	-5.58e-02	0.25	310.95	-26.35	279.30	5.31	
98.36												
1	185	90	0.24	-0.66	-1.71e-02	-0.41	0.40	275.68	-81.84	232.69	-38.85	
116.28												
1	185	91	0.50	-0.57	0.43	-0.50	0.26	341.63	-40.65	281.47	19.51	
139.21												
1	185	92	0.40	-0.48	-0.22	0.14	0.40	386.27	-52.29	255.36	78.62	
200.69												
1	185	93	0.50	-0.57	-0.28	0.21	0.48	408.59	10.50	308.75	110.33	
172.56												
1	185	94	0.34	-1.17	-1.88e-02	-0.81	0.65	429.08	-69.50	311.97	47.61	
211.36												
1	185	95	0.68	-0.51	0.12	4.48e-02	0.59	526.34	-58.85	359.00	108.49	
264.43												
1	185	96	0.52	-0.76	0.14	-0.38	0.58	458.99	-187.24	375.72	-103.97	

Viale Duca Alessandro n. 11 – 43123 Parma
Cell. 335 1403156 – E mail ing.concari@gmail.com
Sito web: studioaire.it – P.IVA 02561480340

216.51												
1	185	97	1.04	-0.49	0.69	-0.15	0.64	562.52	-145.09	471.58	-54.14	
236.82												
1	185	98	0.22	-0.23	0.16	-0.17	-0.16	451.46	-146.45	428.31	-123.30	
115.35												
1	185	99	0.73	-0.22	0.66	-0.15	-0.24	550.09	-125.27	533.31	-108.49	
105.11												
1	185	100	0.97	-0.59	-0.28	0.66	0.62	223.74	-166.82	-20.98	77.89	
188.92												
1	185	101	0.38	-1.25	-0.79	-8.28e-02	0.73	130.84	-120.98	-16.93	26.78	
124.00												
1	185	102	0.40	-0.17	0.40	-0.17	-3.74e-02	143.68	-109.94	-34.28	68.02	
116.04												
1	185	103	-2.23e-02	-0.15	-4.16e-02	-0.13	4.50e-02	136.56	-126.11	-53.98	64.43	
117.24												
1	185	104	6.56e-02	-1.72	-6.67e-02	-1.59	0.47	169.53	-63.16	15.26	91.11	
109.99												
1	185	105	0.12	-2.48	-9.98e-02	-2.26	0.72	168.73	-75.47	7.34	85.93	
115.61												
1	185	106	-0.10	-1.55	-0.32	-1.33	0.52	199.63	-109.42	34.87	55.33	
154.19												
1	185	107	-0.28	-2.28	-0.51	-2.06	0.64	158.69	-68.08	48.97	41.65	
113.33												
1	185	108	0.10	-0.53	-0.28	-0.14	-0.31	73.15	56.46	72.45	57.16	-3.34
1	185	109	-4.92e-02	-0.68	-0.57	-0.16	-0.24	104.84	-12.59	77.01	15.25	
49.94												
1	185	110	0.62	-0.32	0.19	0.11	0.47	46.34	-156.15	-138.31	28.50	
57.39												
1	185	111	-0.13	-0.87	-0.21	-0.80	0.22	9.64	-279.21	-261.61	-7.96	
69.09												
1	185	112	0.19	-0.64	1.83e-02	-0.47	-0.34	158.35	-17.16	155.27	-14.08	-
23.05												
1	185	113	-5.39e-02	-0.31	-0.23	-0.13	0.12	224.85	-11.59	199.72	13.54	
72.87												
1	185	114	0.43	-0.17	0.24	1.69e-02	-0.28	46.47	18.92	43.79	21.59	8.16
1	185	115	2.30	0.41	2.28	0.43	-0.19	974.65	-33.13	955.66	-14.14	
137.04												
1	185	116	0.11	-0.69	-0.58	-1.37e-03	0.27	324.74	-6.74	276.86	41.14	
116.53												
1	185	117	0.90	0.11	0.70	0.31	0.34	191.82	-46.75	146.75	-1.69	
93.38												
1	185	118	0.86	-7.81e-02	0.79	-6.65e-03	0.25	267.25	-28.61	237.36	1.29	
89.16												
1	185	119	0.94	-0.56	0.10	0.28	0.75	10.64	-245.89	-222.04	-13.21	
74.49												
1	185	120	1.25	-0.62	1.24	-0.61	-0.14	754.63	38.15	732.41	60.38	
124.21												
1	185	121	0.22	-0.48	-8.28e-02	-0.17	0.34	397.51	-53.04	307.32	37.14	
180.27												
1	185	122	3.58	1.53	3.53	1.57	0.30	282.92	-969.07	240.03	-926.19	
227.71												
1	185	123	1.04	-0.40	0.91	-0.27	0.41	569.28	-215.69	528.08	-174.49	
175.06												
1	185	124	0.34	-0.45	0.19	-0.30	0.30	505.74	-245.11	465.81	-205.17	
168.50												
1	185	125	2.75e-02	-0.86	-0.11	-0.72	0.33	120.02	-90.99	-33.68	62.71	
93.85												
1	185	126	0.34	-0.85	-0.11	-0.39	-0.58	225.41	-23.52	219.38	-17.49	-
38.28												
1	185	127	0.26	-0.25	0.17	-0.16	-0.20	481.24	-35.85	472.20	-26.81	
67.76												
1	185	128	0.73	-0.21	0.34	0.17	-0.47	29.49	-10.08	20.68	-1.27	
16.47												
1	185	129	6.92e-02	-0.35	-0.24	-4.02e-02	-0.18	425.12	-31.05	418.70	-24.63	
53.74												
1	185	130	-1.22	-1.63	-1.57	-1.27	0.14	-594.06	-732.47	-666.18	-660.36	
69.15												
1	185	131	1.99	-0.89	-0.68	1.79	-0.74	-11.76	-188.19	-23.98	-175.97	-
44.80												
1	185	132	-0.59	-2.51	-2.49	-0.61	0.19	-432.88	-992.42	-989.27	-436.04	
41.90												
1	197	2	-0.72	-1.34	-0.72	-1.34	-9.16e-03	-644.63	-796.06	-704.30	-736.40	
74.00												
1	197	6	2.30e-02	-0.87	-0.85	-6.54e-03	-0.16	-349.89	-579.78	-571.49	-358.18	
42.86												
1	197	7	-1.33e-02	-0.41	-0.27	-0.16	-0.19	229.64	-138.03	156.25	-64.64	
146.96												
1	197	8	-0.33	-1.71	-0.71	-1.33	-0.62	-13.12	-173.27	-28.05	-158.34	
46.57												
1	197	32	1.08	0.24	1.08	0.24	-6.18e-02	133.38	-233.29	102.24	-202.15	
102.21												
1	197	33	1.70	0.23	1.70	0.23	-3.62e-02	-555.00	-1394.97	-603.90	-1346.07	
196.67												
1	197	39	-8.19e-02	-0.37	-0.37	-8.27e-02	1.49e-02	-24.19	-204.24	-203.28	-25.15	-
13.12												
1	197	40	1.17	0.64	0.65	1.16	-5.61e-02	111.92	-152.28	-45.36	5.00	
129.68												
1	197	41	3.46e-02	-0.72	-2.12e-02	-0.66	0.20	141.90	-132.23	-43.35	53.02	
128.32												
1	197	42	-0.18	-2.78	-0.26	-2.70	0.46	26.19	-258.24	-169.39	-62.66	
131.82												
1	197	43	0.64	-1.51	0.63	-1.51	-0.11	566.86	-213.25	563.48	-209.87	

Viale Duca Alessandro n. 11 – 43123 Parma
Cell. 335 1403156 – E mail ing.concari@gmail.com
Sito web: studioaire.it – P.IVA 02561480340

51.20												
1	197	44	-0.17	-1.01	-0.18	-1.00	-7.19e-02	-67.85	-173.60	-173.31	-68.14	5.54
1	197	45	-0.11	-0.92	-0.16	-0.87	-0.19	62.15	-12.24	-1.45	51.36	-
26.20												
1	197	46	0.63	-7.84e-02	-5.61e-02	0.61	0.12	87.59	-84.40	15.17	-11.98	
84.91												
1	197	47	1.00	0.24	0.28	0.96	0.17	168.81	-68.24	125.17	-24.60	
91.88												
1	197	48	0.40	-0.55	-0.54	0.39	-0.10	-282.40	-344.84	-325.83	-301.41	
28.74												
1	197	49	0.40	-0.66	0.12	-0.38	-0.46	179.60	98.77	110.37	168.01	
28.34												
1	197	50	-0.20	-0.91	-0.22	-0.89	-0.13	536.75	-67.61	14.14	455.01	
206.69												
1	197	51	2.61e-02	-0.72	-9.08e-03	-0.68	0.16	567.03	-119.26	23.55	424.22	
278.60												
1	197	52	1.18	-1.95e-02	0.44	0.72	0.59	167.68	-341.27	55.72	-229.31	
210.83												
1	197	53	1.23	-0.70	-0.68	1.21	0.16	-323.29	-1226.46	-365.90	-1183.85	
191.50												
1	197	54	1.21	0.31	0.41	1.11	-0.28	70.65	-431.23	61.70	-422.29	
66.40												
1	197	55	0.88	2.83e-02	0.14	0.77	-0.28	-8.81	-200.15	-63.05	-145.92	-
86.23												
1	197	56	0.52	0.30	0.49	0.34	8.38e-02	86.93	-49.70	15.22	22.00	
68.23												
1	197	57	0.54	-0.97	-0.91	0.48	0.29	38.46	-72.20	17.21	-50.95	
43.59												
1	197	58	0.57	-0.94	-0.85	0.48	0.37	6.12	-187.78	-45.87	-135.80	
85.89												
1	197	59	2.35e-02	-0.83	-0.43	-0.37	-0.43	206.44	-164.59	108.60	-66.75	
163.49												
1	197	60	-0.15	-1.55	-0.17	-1.53	0.15	263.56	-67.60	148.25	47.71	
157.76												
1	197	61	0.12	-1.83	-1.91e-03	-1.70	0.48	286.31	-14.53	194.29	77.49	
138.62												
1	197	62	-6.03e-02	-1.00	-0.33	-0.74	0.42	235.72	-138.06	221.05	-123.39	
72.58												
1	197	63	-0.19	-0.74	-0.53	-0.39	0.27	241.63	-298.33	215.92	-272.62	
114.98												
1	197	64	0.74	5.87e-04	0.69	4.38e-02	-0.17	276.88	13.48	275.44	14.92	
19.44												
1	197	65	7.47e-03	-0.39	-0.34	-4.84e-02	-0.14	313.47	-188.83	267.31	-142.67	
145.10												
1	197	66	0.22	-0.18	0.10	-6.63e-02	0.18	303.55	-31.89	281.39	-9.73	
83.32												
1	197	67	0.79	-5.43e-02	0.74	-4.44e-03	0.20	369.33	-28.93	322.35	18.05	
128.48												
1	197	68	1.05	-0.28	1.01	-0.24	-0.22	508.48	63.15	466.39	105.24	
130.28												
1	197	69	1.13	-0.61	0.51	8.64e-03	-0.83	448.18	94.29	357.95	184.52	
154.24												
1	197	70	0.49	-0.14	-8.60e-02	0.43	-0.17	519.80	65.63	320.57	264.85	
225.37												
1	197	71	0.64	-0.52	0.26	-0.15	0.54	564.27	-120.49	326.93	116.85	
325.87												
1	197	72	0.48	-0.49	0.33	-0.34	-0.35	385.10	-64.88	383.77	-63.55	-
24.35												
1	197	73	1.61	-0.40	1.55	-0.33	-0.36	429.32	-235.22	429.06	-234.96	-
13.25												
1	197	74	2.01	-0.38	2.01	-0.37	0.12	665.29	-368.59	625.22	-328.53	
199.55												
1	197	75	1.83	-0.39	1.57	-0.13	0.71	564.34	-385.86	387.97	-209.49	
369.43												
1	197	76	0.80	-0.16	0.75	-0.11	0.22	202.96	-132.50	78.19	-7.73	
162.13												
1	197	77	0.35	-0.23	0.30	-0.18	0.16	227.27	-139.07	102.50	-14.30	
173.61												
1	197	78	1.30	-0.60	0.93	-0.23	-0.75	219.20	49.58	67.18	201.61	
51.73												
1	197	79	0.65	-0.58	0.26	-0.19	-0.57	231.47	75.75	84.10	223.12	
35.08												
1	197	80	0.10	-0.50	-0.19	-0.21	-0.30	571.13	21.90	226.31	366.73	
265.49												
1	197	81	0.12	-0.33	6.54e-03	-0.21	-0.20	569.55	-16.12	159.58	393.86	
268.38												
1	197	82	0.73	-0.64	0.11	-2.51e-02	0.69	634.50	-98.36	213.29	322.84	
362.31												
1	197	83	0.45	-0.54	0.19	-0.28	0.44	605.90	-133.04	150.39	322.46	
359.31												
1	197	84	1.99	-2.97e-02	1.48	0.47	0.87	335.74	-580.49	-38.67	-206.08	
450.40												
1	197	85	0.94	-0.90	0.61	-0.56	0.71	329.18	-568.33	9.69	-248.85	
429.73												
1	197	86	1.78	0.43	1.68	0.52	-0.34	-9.85	-371.67	-60.96	-320.56	-
126.01												
1	197	87	0.98	-1.03e-02	0.67	0.30	-0.46	4.54	-385.85	-7.51	-373.79	-
67.54												
1	197	88	0.34	-0.66	-9.41e-02	-0.22	0.50	172.68	-55.75	146.04	-29.11	
73.32												
1	197	89	0.64	-0.14	0.56	-5.95e-02	0.24	297.96	-18.93	271.62	7.41	
87.48												

Viale Duca Alessandro n. 11 – 43123 Parma
Cell. 335 1403156 – E mail ing.concari@gmail.com
Sito web: studioaire.it – P.IVA 02561480340

1	197	90	0.28	-0.48	0.28	-0.47	-5.68e-02	264.76	-74.99	231.73	-41.96	100.65
1	197	91	0.77	-0.60	0.72	-0.55	0.25	321.41	-36.40	272.80	12.22	122.61
1	197	92	-0.14	-0.86	-0.30	-0.70	0.30	368.41	-39.35	256.95	72.10	181.73
1	197	93	0.52	-0.54	-0.32	0.30	0.43	413.72	-35.46	308.52	69.74	190.22
1	197	94	0.13	-1.58	-5.02e-02	-1.39	0.53	410.85	-59.50	312.29	39.05	191.43
1	197	95	0.30	-0.77	-1.86e-02	-0.46	0.49	468.84	-73.63	359.95	35.26	217.29
1	197	96	0.30	-1.17	0.13	-1.00	0.48	430.55	-170.86	374.98	-115.29	174.17
1	197	97	0.88	-0.62	0.71	-0.45	0.48	550.96	-137.13	473.55	-59.71	217.43
1	197	98	0.31	-0.35	0.22	-0.27	-0.22	444.23	-148.42	424.46	-128.65	106.41
1	197	99	0.83	-0.30	0.73	-0.20	-0.32	549.06	-125.62	535.39	-111.95	95.05
1	197	100	1.06	-0.61	-0.32	0.77	0.64	207.50	-136.28	-21.09	92.32	162.27
1	197	101	0.99	-1.14	-0.82	0.68	0.76	123.20	-103.20	-16.15	36.15	110.14
1	197	102	0.55	-3.49	0.55	-3.49	-7.73e-02	176.89	-125.30	-15.44	67.03	145.36
1	197	103	-7.09e-03	-3.41	-7.17e-03	-3.41	1.61e-02	166.84	-139.57	-33.09	60.37	145.91
1	197	104	-2.24e-02	-2.68	-8.77e-02	-2.61	0.41	186.91	-90.16	15.73	81.02	134.63
1	197	105	4.27e-02	-2.65	-0.12	-2.48	0.65	187.44	-102.29	9.38	75.77	141.01
1	197	106	-0.21	-2.49	-0.35	-2.35	0.54	213.03	-138.59	38.07	36.37	175.81
1	197	107	-0.37	-2.46	-0.55	-2.28	0.59	167.65	-90.98	52.31	24.36	128.55
1	197	108	4.09e-02	-0.60	-0.30	-0.26	-0.32	71.85	44.98	65.21	51.62	-11.59
1	197	109	-6.65e-02	-0.68	-0.57	-0.18	-0.24	103.71	-12.94	83.06	7.70	44.52
1	197	110	0.63	-0.33	0.17	0.13	0.48	43.63	-134.40	-113.94	23.17	56.77
1	197	111	-6.54e-02	-0.70	-0.14	-0.63	0.20	15.59	-236.68	-217.17	-3.92	67.39
1	197	112	0.19	-0.65	-1.57e-03	-0.46	-0.35	158.27	-32.59	154.16	-28.47	-27.72
1	197	113	-6.73e-02	-0.32	-0.25	-0.14	0.11	209.91	-10.31	191.56	8.05	60.87
1	197	114	0.50	-0.17	0.32	1.01e-02	-0.30	41.06	21.51	40.44	22.12	3.42
1	197	115	2.28	0.15	2.26	0.17	-0.17	735.85	-29.31	719.37	-12.84	111.05
1	197	116	9.34e-02	-0.72	-0.62	-1.90e-03	0.26	307.37	0.32	269.21	38.49	101.30
1	197	117	0.98	0.15	0.77	0.36	0.36	169.15	-26.81	143.00	-0.66	66.63
1	197	118	0.90	-5.57e-02	0.86	-1.36e-02	0.20	243.38	-14.69	227.38	1.31	62.23
1	197	119	0.94	-0.53	0.11	0.31	0.73	16.96	-206.72	-180.71	-9.04	71.69
1	197	120	1.14	-0.64	1.13	-0.64	-6.95e-02	683.37	15.57	646.12	52.81	153.25
1	197	121	0.20	-0.48	-0.12	-0.16	0.34	371.48	-27.48	298.40	45.59	154.32
1	197	122	3.56	1.56	3.55	1.58	0.18	306.63	-984.88	274.36	-952.60	201.60
1	197	123	1.02	-0.42	0.95	-0.35	0.30	566.22	-238.20	533.27	-205.25	159.43
1	197	124	0.28	-0.64	0.21	-0.58	0.23	495.41	-246.35	462.49	-213.43	152.76
1	197	125	2.74e-02	-0.82	-0.12	-0.68	0.32	110.17	-74.28	-31.83	67.72	77.64
1	197	126	0.38	-0.86	-0.10	-0.38	-0.60	233.90	-24.69	224.08	-14.87	-49.42
1	197	127	0.88	-0.27	0.80	-0.19	-0.29	484.85	-35.60	477.19	-27.94	62.67
1	197	128	0.82	-0.20	0.45	0.17	-0.49	19.99	-12.41	14.71	-7.13	11.96
1	197	129	0.90	-8.84e-02	0.85	-3.71e-02	-0.22	418.91	-32.59	413.40	-27.09	49.56
1	197	130	-1.32	-1.67	-1.58	-1.41	0.15	-637.20	-806.49	-761.87	-681.82	74.59
1	197	131	-9.99e-02	-1.94	-0.63	-1.41	-0.83	-6.63	-203.84	-7.47	-203.00	-12.80
1	197	132	0.81	-1.97	-1.95	0.79	0.22	-430.12	-825.02	-820.83	-434.30	40.42
1	217	2	-0.34	-0.56	-0.56	-0.34	5.71e-03	-584.43	-744.87	-604.38	-724.91	52.95
1	217	6	9.18e-02	-0.81	-0.76	4.01e-02	-0.21	-359.21	-576.33	-567.68	-367.85	42.45
1	217	7	3.91e-02	-0.24	-8.33e-02	-0.12	-0.14	227.97	-119.64	163.18	-54.85	135.37
1	217	8	-0.39	-1.17	-0.56	-1.00	-0.32	-9.76	-77.94	-39.26	-48.43	

Viale Duca Alessandro n. 11 – 43123 Parma
Cell. 335 1403156 – E mail ing.concari@gmail.com
Sito web: studioaire.it – P.IVA 02561480340

33.78
1 217 32 0.94 0.33 0.93 0.33 -6.14e-02 236.28 -238.50 207.67 -209.89
112.99
1 217 33 1.44 0.24 1.44 0.25 -6.55e-02 -588.61 -1196.88 -652.49 -1133.01
186.47
1 217 39 0.52 -0.83 -0.30 -7.07e-03 -0.66 -38.23 -205.51 -205.11 -38.63 -8.11
1 217 40 0.85 0.43 0.45 0.83 -7.23e-02 91.88 -92.09 -39.50 39.29
83.12
1 217 41 4.71e-02 -0.64 -1.85e-02 -0.57 0.20 122.02 -87.12 -40.21 75.11
87.24
1 217 42 -8.53e-02 -2.07 -0.15 -2.00 0.36 31.07 -216.53 -143.17 -42.29
113.05
1 217 43 0.44 -1.10 0.44 -1.10 -8.04e-02 468.19 -253.85 464.75 -250.40
49.79
1 217 44 -0.10 -0.78 -0.10 -0.78 -1.79e-02 -79.49 -137.36 -137.18 -79.67 3.23
1 217 45 -0.13 -0.76 -0.16 -0.73 -0.14 47.20 -10.25 -5.71 42.66 -
15.49
1 217 46 0.59 -9.62e-02 -8.06e-02 0.57 0.10 103.91 -45.17 14.57 44.16
73.06
1 217 47 0.94 0.26 0.29 0.91 0.15 157.36 -59.36 114.75 -16.74
86.13
1 217 48 0.47 -0.45 -0.44 0.46 -9.41e-02 -216.08 -280.52 -238.52 -258.08
30.70
1 217 49 0.68 -0.19 0.14 0.35 -0.43 191.39 76.15 100.49 167.05
47.03
1 217 50 -0.16 -0.57 -0.18 -0.55 -9.65e-02 494.11 -58.37 9.77 425.97
181.66
1 217 51 0.23 -0.10 -2.69e-02 0.16 0.14 516.37 -107.97 17.88 390.51
250.48
1 217 52 1.53 0.17 0.38 1.33 0.49 141.08 -321.40 33.27 -213.60
195.54
1 217 53 1.08 -0.54 -0.54 1.07 9.76e-02 -262.99 -1124.65 -286.78 -1100.86
141.20
1 217 54 1.03 0.27 0.36 0.95 -0.23 30.63 -491.49 20.76 -481.63
71.08
1 217 55 0.71 1.70e-02 9.89e-02 0.63 -0.22 -8.11 -172.06 -60.28 -119.90 -
76.36
1 217 56 0.72 -3.98e-02 0.44 0.24 0.37 97.17 -53.51 27.72 15.94
75.11
1 217 57 0.47 -0.72 -0.59 0.33 0.38 33.42 -64.42 24.34 -55.34
28.39
1 217 58 0.39 -0.71 -0.66 0.33 0.24 -2.64 -178.12 -46.78 -133.98
76.14
1 217 59 -7.77e-02 -0.43 -0.31 -0.20 -0.17 202.28 -132.27 125.85 -55.84
140.46
1 217 60 -4.81e-02 -0.97 -6.21e-02 -0.95 0.11 240.59 -20.58 153.60 66.41
123.09
1 217 61 0.20 -1.23 4.78e-02 -1.08 0.45 267.57 44.08 198.41 113.23
103.31
1 217 62 0.11 -0.77 -0.20 -0.45 0.42 237.65 -106.93 231.75 -101.03
44.71
1 217 63 -3.63e-02 -0.44 -0.39 -9.41e-02 0.14 285.49 -258.35 257.66 -230.52
119.84
1 217 64 0.50 1.97e-02 0.47 5.03e-02 -0.12 290.56 11.10 287.88 13.77
27.21
1 217 65 2.18e-02 -0.32 -0.28 -2.07e-02 -0.11 328.37 -146.50 281.88 -100.01
141.11
1 217 66 0.23 -0.14 0.16 -5.99e-02 0.15 296.67 -34.14 269.38 -6.86
91.00
1 217 67 0.74 -5.50e-02 0.69 -5.49e-03 0.19 360.55 -40.74 312.22 7.59
130.61
1 217 68 0.89 -0.19 0.88 -0.18 -0.11 492.63 36.91 456.60 72.94
122.97
1 217 69 1.42 -0.77 0.60 5.48e-02 -1.06 428.44 74.86 355.81 147.49
142.85
1 217 70 0.43 -1.57e-02 1.43e-03 0.41 -8.58e-02 485.65 55.47 306.61 234.51
212.05
1 217 71 0.81 -0.11 0.41 0.29 0.46 538.01 -104.72 308.81 124.48
307.86
1 217 72 0.13 -0.43 -3.85e-02 -0.26 -0.26 352.81 -52.93 352.74 -52.86 -5.38
1 217 73 1.24 -0.23 1.23 -0.22 -4.71e-02 395.41 -217.64 395.12 -217.35 -
13.29
1 217 74 1.65 -0.25 1.62 -0.23 0.21 612.89 -357.94 574.35 -319.40
189.56
1 217 75 1.58 -0.29 1.28 3.80e-03 0.68 536.43 -350.77 361.73 -176.07
352.81
1 217 76 0.75 -7.57e-02 0.69 -2.12e-02 0.20 202.68 -119.54 82.18 0.96
155.91
1 217 77 0.33 -0.14 0.28 -9.28e-02 0.14 223.12 -120.72 103.49 -1.10
163.77
1 217 78 1.13 -0.22 0.78 0.12 -0.59 217.06 51.31 85.50 182.87
67.06
1 217 79 0.58 -0.41 0.22 -4.31e-02 -0.48 229.41 61.95 84.14 207.22
56.78
1 217 80 0.51 -0.20 -8.74e-02 0.39 -0.26 527.38 31.65 218.50 340.53
240.23
1 217 81 0.17 -0.17 2.72e-02 -3.32e-02 -0.17 528.71 2.52 164.59 366.64
242.92
1 217 82 0.77 -0.35 0.11 0.32 0.55 588.34 -94.48 195.51 298.35
337.51
1 217 83 0.43 -0.34 0.16 -6.56e-02 0.37 565.73 -121.76 140.89 303.08
334.04

Viale Duca Alessandro n. 11 – 43123 Parma
Cell. 335 1403156 – E mail ing.concari@gmail.com
Sito web: studioaire.it – P.IVA 02561480340

1	217	84	2.14	0.45	1.21	1.38	0.84	315.01	-449.47	-19.66	-114.80	379.27	
1	217	85	1.53	4.50e-02	0.50	1.07	0.68	321.02	-406.73	30.69	-116.41	356.36	
1	217	86	1.42	-0.14	1.40	-0.11	-0.21	-27.49	-328.89	-67.47	-288.91	-102.23	
1	217	87	0.74	-7.94e-03	0.55	0.18	-0.33	5.53	-339.13	-18.21	-315.39	-87.28	
1	217	88	0.40	-0.43	5.28e-02	-8.33e-02	0.40	177.86	-44.92	162.56	-29.62	56.34	
1	217	89	0.58	-0.13	0.51	-5.69e-02	0.21	297.38	-25.78	272.55	-0.95	86.07	
1	217	90	0.23	-0.54	6.25e-02	-0.37	0.32	272.23	-71.24	238.08	-37.09	102.78	
1	217	91	0.52	-0.50	0.46	-0.44	0.23	323.21	-36.18	276.90	10.13	120.41	
1	217	92	0.38	-0.34	-0.15	0.19	0.32	370.05	-26.25	257.84	85.96	178.54	
1	217	93	0.48	-0.46	-0.22	0.25	0.40	389.23	22.47	300.21	111.49	157.24	
1	217	94	0.31	-0.89	9.73e-03	-0.60	0.52	412.09	-42.77	312.97	56.35	187.78	
1	217	95	0.60	-0.38	0.13	8.82e-02	0.49	491.70	-35.58	350.82	105.30	233.31	
1	217	96	0.46	-0.57	0.16	-0.28	0.47	447.21	-159.95	380.35	-93.09	190.07	
1	217	97	0.88	-0.37	0.60	-9.24e-02	0.52	532.58	-128.69	457.58	-53.69	209.70	
1	217	98	0.21	-0.18	0.17	-0.14	-0.13	451.20	-136.38	433.10	-118.28	101.53	
1	217	99	0.62	-0.17	0.57	-0.12	-0.19	530.47	-120.19	517.35	-107.07	91.45	
1	217	100	0.79	-0.45	-0.21	0.54	0.50	179.05	-137.90	-13.64	54.79	154.74	
1	217	101	0.30	-0.95	-0.58	-6.03e-02	0.57	99.10	-99.17	-13.47	13.40	98.22	
1	217	102	0.34	-0.14	0.34	-0.14	-2.76e-02	150.31	-81.90	-15.47	83.88	104.94	
1	217	103	-1.13e-02	-0.11	-2.20e-02	-9.53e-02	3.00e-02	145.00	-92.99	-27.55	79.56	106.26	
1	217	104	5.55e-02	-1.36	-4.14e-02	-1.27	0.36	164.41	-33.30	26.87	104.24	90.97	
1	217	105	9.50e-02	-1.97	-7.07e-02	-1.80	0.56	162.88	-40.89	24.04	97.95	94.95	
1	217	106	-7.88e-02	-1.22	-0.24	-1.05	0.40	163.79	-80.32	36.53	46.93	121.95	
1	217	107	-0.20	-1.80	-0.37	-1.63	0.49	122.84	-44.54	44.56	33.75	83.52	
1	217	108	9.45e-02	-0.43	-0.21	-0.12	-0.26	70.96	37.51	68.74	39.73	8.34	
1	217	109	-2.64e-02	-0.52	-0.41	-0.14	-0.20	101.00	-32.05	69.56	-0.61	56.52	
1	217	110	0.52	-0.27	0.17	7.73e-02	0.39	40.34	-121.38	-105.63	24.59	47.95	
1	217	111	-9.21e-02	-0.67	-0.14	-0.62	0.16	-9.96	-234.14	-217.91	-26.18	58.09	
1	217	112	0.16	-0.52	3.17e-02	-0.39	-0.27	138.87	-8.80	136.84	-6.77	-17.19	
1	217	113	-5.41e-02	-0.23	-0.16	-0.12	8.39e-02	194.28	-8.68	174.12	11.47	60.70	
1	217	114	0.36	-0.15	0.21	2.96e-03	-0.23	57.29	17.84	55.06	20.07	9.10	
1	217	115	1.96	0.34	1.95	0.35	-0.14	793.99	-71.00	777.06	-54.07	119.83	
1	217	116	9.78e-02	-0.54	-0.45	1.47e-02	0.21	278.71	-6.34	239.32	33.05	98.37	
1	217	117	0.80	0.11	0.66	0.25	0.27	193.38	-34.66	161.56	-2.84	79.01	
1	217	118	0.79	-5.73e-02	0.73	-4.18e-03	0.20	256.99	-22.27	235.22	-0.51	74.86	
1	217	119	0.78	-0.44	9.71e-02	0.24	0.61	9.91	-190.90	-171.15	-9.84	59.80	
1	217	120	1.00	-0.45	0.99	-0.44	-0.10	625.92	-28.63	609.02	-11.73	103.84	
1	217	121	0.24	-0.37	-6.71e-03	-0.12	0.30	366.48	-47.82	292.74	25.92	158.47	
1	217	122	2.97	1.25	2.93	1.29	0.26	171.52	-959.34	132.92	-920.74	205.33	
1	217	123	0.88	-0.31	0.78	-0.21	0.33	548.85	-204.61	516.06	-171.83	153.71	
1	217	124	0.31	-0.34	0.21	-0.23	0.24	497.23	-227.00	465.81	-195.58	147.53	
1	217	125	4.39e-03	-0.71	-0.11	-0.59	0.26	95.46	-73.55	-29.62	51.53	74.12	
1	217	126	0.27	-0.67	-8.64e-02	-0.31	-0.46	194.65	-20.25	189.40	-15.01	-33.16	
1	217	127	0.23	-0.20	0.16	-0.13	-0.16	469.87	-32.53	462.65	-25.30	59.83	
1	217	128	0.61	-0.17	0.28	0.15	-0.38	46.91	-10.02	39.33	-2.43	19.35	
1	217	129	6.01e-02	-0.27	-0.18	-3.27e-02	-0.15	424.79	-28.20	420.20	-23.61	45.38	
1	217	130	-0.97	-1.22	-1.18	-1.01	9.43e-02	-546.15	-685.09	-576.04	-655.20	57.09	

Viale Duca Alessandro n. 11 – 43123 Parma
Cell. 335 1403156 – E mail ing.concari@gmail.com
Sito web: studioaire.it – P.IVA 02561480340

1	217	131	1.60	-0.67	-0.51	1.44	-0.60	-14.74	-148.96	-18.09	-145.60	-20.96
1	217	132	-0.46	-1.91	-1.89	-0.48	0.15	-414.64	-807.13	-802.88	-418.89	40.63
1	229	2	-0.54	-1.07	-0.54	-1.07	-9.79e-03	-631.55	-774.19	-665.11	-740.63	60.51
1	229	6	3.92e-02	-0.66	-0.64	1.60e-02	-0.13	-360.89	-524.62	-512.79	-372.72	42.39
1	229	7	4.27e-02	-0.31	-0.16	-0.11	-0.17	225.45	-120.82	164.22	-59.59	132.11
1	229	8	-0.21	-1.36	-0.51	-1.07	-0.50	-4.95	-160.14	-28.49	-136.60	55.67
1	229	32	0.92	0.21	0.92	0.21	-4.47e-02	75.83	-247.26	46.80	-218.23	92.40
1	229	33	1.41	0.21	1.41	0.21	-3.30e-02	-579.14	-1339.72	-625.68	-1293.17	182.30
1	229	39	-5.11e-02	-0.27	-0.26	-5.55e-02	3.05e-02	-33.80	-170.12	-170.01	-33.91	-3.89
1	229	40	0.88	0.50	0.50	0.88	-4.22e-02	113.03	-119.30	-39.97	33.71	110.17
1	229	41	1.34e-02	-0.61	-2.88e-02	-0.57	0.16	137.19	-100.22	-38.39	75.36	104.20
1	229	42	-0.12	-2.21	-0.18	-2.15	0.36	10.33	-223.13	-146.30	-66.51	109.70
1	229	43	0.51	-1.19	0.51	-1.18	-0.11	481.70	-262.78	479.52	-260.60	40.20
1	229	44	-0.13	-0.79	-0.13	-0.78	-4.20e-02	-86.37	-150.46	-150.24	-86.59	3.77
1	229	45	-0.10	-0.75	-0.14	-0.71	-0.15	47.64	-11.82	-6.41	42.24	-17.10
1	229	46	0.50	-8.37e-02	-6.66e-02	0.48	9.82e-02	70.97	-70.60	9.72	-9.35	70.14
1	229	47	0.84	0.21	0.25	0.80	0.15	131.24	-63.21	93.88	-25.85	76.62
1	229	48	0.36	-0.45	-0.44	0.35	-7.81e-02	-228.64	-291.30	-246.01	-273.93	28.05
1	229	49	0.36	-0.52	0.12	-0.28	-0.39	161.40	71.29	81.44	151.25	28.49
1	229	50	-0.17	-0.75	-0.19	-0.73	-0.10	479.17	-58.24	7.81	413.12	176.44
1	229	51	9.06e-03	-0.58	-1.97e-02	-0.55	0.13	497.16	-105.46	15.04	376.66	241.03
1	229	52	1.01	1.60e-02	0.39	0.64	0.48	126.37	-314.44	32.18	-220.25	180.69
1	229	53	1.04	-0.57	-0.56	1.02	0.16	-226.02	-1125.52	-258.54	-1093.00	167.90
1	229	54	1.01	0.26	0.35	0.92	-0.25	44.49	-403.75	36.19	-395.46	60.41
1	229	55	0.70	7.18e-03	9.41e-02	0.62	-0.23	-6.76	-167.09	-57.37	-116.48	-74.52
1	229	56	0.48	0.25	0.47	0.27	6.10e-02	86.82	-28.51	40.90	17.41	56.46
1	229	57	0.41	-0.69	-0.65	0.37	0.20	56.63	-62.67	46.06	-52.10	33.90
1	229	58	0.44	-0.68	-0.61	0.37	0.27	38.74	-166.02	2.50	-129.78	78.15
1	229	59	3.05e-02	-0.61	-0.30	-0.29	-0.32	212.01	-143.47	128.18	-59.63	150.91
1	229	60	-9.00e-02	-1.20	-9.96e-02	-1.19	0.10	257.77	-41.16	157.95	58.66	140.97
1	229	61	0.11	-1.42	2.65e-02	-1.33	0.36	273.90	11.29	201.48	83.71	117.36
1	229	62	-3.28e-02	-0.75	-0.21	-0.57	0.31	240.06	-119.01	232.03	-110.98	53.09
1	229	63	-0.13	-0.55	-0.37	-0.31	0.20	265.41	-279.27	246.62	-260.48	99.41
1	229	64	0.61	9.11e-04	0.58	3.31e-02	-0.14	284.31	9.11	282.61	10.81	21.53
1	229	65	1.41e-02	-0.28	-0.23	-4.29e-02	-0.12	318.90	-178.63	277.81	-137.54	136.95
1	229	66	0.23	-0.14	0.15	-5.54e-02	0.15	280.69	-26.48	262.88	-8.67	71.80
1	229	67	0.73	-5.84e-02	0.68	-1.18e-02	0.19	339.64	-32.43	298.78	8.43	116.33
1	229	68	0.91	-0.23	0.89	-0.21	-0.15	454.98	42.46	421.28	76.16	112.99
1	229	69	0.95	-0.45	0.47	2.35e-02	-0.66	403.47	85.95	332.80	156.62	132.08
1	229	70	0.43	-6.13e-02	-3.23e-02	0.40	-0.12	475.38	66.99	301.20	241.17	201.98
1	229	71	0.57	-0.40	0.24	-7.09e-02	0.46	521.61	-96.75	308.77	116.09	293.79
1	229	72	0.40	-0.39	0.29	-0.27	-0.28	363.04	-52.79	362.13	-51.88	-19.42
1	229	73	1.34	-0.32	1.29	-0.27	-0.28	403.01	-221.80	402.45	-221.24	-18.80
1	229	74	1.68	-0.29	1.67	-0.29	0.10	609.79	-355.97	575.86	-322.05	177.80
1	229	75	1.54	-0.30	1.32	-7.25e-02	0.60	525.12	-350.37	364.40	-189.66	338.94
1	229	76	0.71	-0.13	0.67	-8.59e-02	0.19	180.32	-114.93	71.65	-6.27	142.39
1	229	77	0.31	-0.18	0.27	-0.14	0.14	197.92	-115.69	92.52	-10.29	148.14

Viale Duca Alessandro n. 11 – 43123 Parma
Cell. 335 1403156 – E mail ing.concari@gmail.com
Sito web: studioaire.it – P.IVA 02561480340

1	229	78	1.09	-0.46	0.80	-0.17	-0.60	200.02	47.66	65.44	182.24	48.91
1	229	79	0.54	-0.45	0.23	-0.14	-0.45	215.47	68.34	79.96	203.84	39.69
1	229	80	9.76e-02	-0.37	-0.14	-0.14	-0.23	511.39	26.31	203.11	334.59	233.47
1	229	81	0.11	-0.24	2.16e-02	-0.15	-0.15	512.73	-8.10	145.43	359.19	237.47
1	229	82	0.64	-0.51	0.10	2.39e-02	0.57	568.29	-87.67	189.95	290.68	324.09
1	229	83	0.40	-0.42	0.17	-0.19	0.37	546.50	-117.94	135.78	292.78	322.81
1	229	84	1.66	-4.41e-04	1.23	0.43	0.73	303.77	-515.25	-34.62	-176.86	403.29
1	229	85	0.79	-0.70	0.51	-0.41	0.59	296.91	-496.22	11.13	-210.44	380.77
1	229	86	1.47	0.35	1.41	0.41	-0.26	-11.66	-326.42	-54.82	-283.26	-108.27
1	229	87	0.79	-1.78e-03	0.56	0.24	-0.36	4.27	-326.90	-4.68	-317.96	-53.69
1	229	88	0.32	-0.51	9.85e-03	-0.20	0.40	184.52	-48.75	164.71	-28.95	65.02
1	229	89	0.60	-0.13	0.53	-5.98e-02	0.21	287.22	-20.12	266.37	0.74	77.29
1	229	90	0.30	-0.43	0.30	-0.42	-5.06e-02	264.09	-66.37	237.30	-39.59	90.18
1	229	91	0.73	-0.52	0.69	-0.48	0.22	307.66	-33.51	269.90	4.25	107.04
1	229	92	-7.48e-02	-0.62	-0.21	-0.48	0.23	355.96	-16.12	259.12	80.71	163.26
1	229	93	0.49	-0.43	-0.26	0.32	0.36	393.46	-14.65	300.02	78.78	171.47
1	229	94	0.13	-1.22	-1.56e-02	-1.07	0.42	397.87	-35.18	313.23	49.46	171.72
1	229	95	0.28	-0.58	1.49e-02	-0.31	0.40	446.84	-48.98	351.59	46.27	195.33
1	229	96	0.29	-0.91	0.15	-0.77	0.38	425.83	-148.28	379.76	-102.21	155.97
1	229	97	0.75	-0.47	0.61	-0.33	0.39	523.89	-122.90	459.17	-58.17	194.10
1	229	98	0.28	-0.28	0.22	-0.22	-0.18	445.66	-138.26	430.00	-122.60	94.34
1	229	99	0.71	-0.23	0.63	-0.16	-0.26	529.89	-120.72	519.03	-109.86	83.36
1	229	100	0.86	-0.47	-0.24	0.63	0.51	165.50	-112.83	-13.73	66.41	133.27
1	229	101	0.80	-0.86	-0.61	0.55	0.59	92.73	-84.62	-12.84	20.94	87.05
1	229	102	0.46	-2.82	0.46	-2.81	-5.97e-02	176.53	-93.75	-0.30	83.08	128.55
1	229	103	5.78e-03	-2.74	5.76e-03	-2.74	6.78e-03	169.26	-103.69	-10.72	76.29	129.36
1	229	104	-1.14e-02	-2.14	-5.84e-02	-2.10	0.31	177.74	-54.36	27.24	96.13	110.82
1	229	105	3.39e-02	-2.11	-8.96e-02	-1.98	0.50	177.51	-62.05	25.68	89.77	115.41
1	229	106	-0.17	-1.98	-0.27	-1.87	0.42	174.79	-104.02	39.10	31.66	139.36
1	229	107	-0.27	-1.95	-0.40	-1.82	0.45	130.30	-63.22	47.24	19.84	95.78
1	229	108	4.50e-02	-0.49	-0.23	-0.22	-0.27	63.01	35.19	62.90	35.29	1.68
1	229	109	-3.98e-02	-0.52	-0.41	-0.15	-0.20	99.94	-32.17	74.43	-6.67	52.15
1	229	110	0.53	-0.27	0.16	9.62e-02	0.40	38.40	-104.10	-86.00	20.30	47.46
1	229	111	-3.90e-02	-0.53	-9.04e-02	-0.48	0.15	-4.79	-200.25	-182.11	-22.93	56.71
1	229	112	0.16	-0.52	1.56e-02	-0.38	-0.28	138.76	-21.17	135.96	-18.36	-20.98
1	229	113	-6.56e-02	-0.24	-0.18	-0.12	8.02e-02	182.40	-7.80	167.55	7.04	51.03
1	229	114	0.42	-0.15	0.28	-2.49e-03	-0.25	53.20	19.64	52.35	20.49	5.27
1	229	115	1.94	0.14	1.93	0.15	-0.13	601.66	-67.97	586.72	-53.02	98.91
1	229	116	8.58e-02	-0.56	-0.49	1.42e-02	0.20	264.85	-0.79	233.15	30.91	86.11
1	229	117	0.86	0.15	0.71	0.29	0.29	176.98	-20.46	158.54	-2.02	57.46
1	229	118	0.82	-4.14e-02	0.78	-9.72e-03	0.16	238.98	-12.29	227.18	-0.49	53.15
1	229	119	0.78	-0.42	9.84e-02	0.26	0.59	15.15	-159.51	-137.87	-6.49	57.54
1	229	120	0.91	-0.47	0.91	-0.47	-4.85e-02	567.18	-45.48	539.51	-17.81	127.23
1	229	121	0.22	-0.37	-3.72e-02	-0.11	0.29	345.97	-27.68	285.56	32.73	137.56
1	229	122	2.95	1.28	2.94	1.30	0.16	190.63	-972.01	160.66	-942.04	184.25
1	229	123	0.87	-0.32	0.82	-0.27	0.24	547.04	-223.42	520.25	-196.63	141.14
1	229	124	0.27	-0.51	0.22	-0.46	0.18	489.45	-228.54	463.15	-202.24	134.87

Viale Duca Alessandro n. 11 – 43123 Parma
Cell. 335 1403156 – E mail ing.concari@gmail.com
Sito web: studioaire.it – P.IVA 02561480340

1	229	125	4.57e-03	-0.67	-0.11	-0.55	0.26	87.75	-60.31	-28.13	55.57	61.06
1	229	126	0.30	-0.67	-7.84e-02	-0.29	-0.47	201.51	-21.19	193.22	-12.90	-42.16
1	229	127	0.72	-0.22	0.66	-0.16	-0.23	472.90	-32.43	466.67	-26.21	55.74
1	229	128	0.68	-0.16	0.37	0.15	-0.41	39.75	-12.41	34.50	-7.16	15.70
1	229	129	0.74	-7.08e-02	0.70	-3.02e-02	-0.18	419.90	-29.56	415.93	-25.59	42.02
1	229	130	-1.05	-1.27	-1.19	-1.13	0.10	-600.72	-725.08	-653.28	-672.52	61.43
1	229	131	-5.15e-02	-1.56	-0.46	-1.15	-0.67	-4.64	-167.52	-4.78	-167.37	4.81
1	229	132	0.67	-1.47	-1.46	0.65	0.17	-411.41	-673.28	-667.19	-417.50	39.44
1	303	2	0.26	-2.28	0.26	-2.27	-9.01e-02	-738.30	-1154.74	-738.36	-1154.67	-5.09
1	303	6	-0.21	-1.85	-0.27	-1.80	0.30	-340.03	-525.17	-343.08	-522.12	23.55
1	303	7	-0.95	-2.90	-1.05	-2.80	0.42	386.58	27.25	357.52	56.32	97.98
1	303	8	-0.50	-2.98	-0.52	-2.97	-0.19	93.85	-137.21	-29.26	-14.10	115.28
1	303	32	-0.12	-1.85	-0.14	-1.84	-0.16	-145.56	-371.51	-211.88	-305.19	102.89
1	303	33	0.17	-1.74	0.16	-1.73	-0.13	-939.72	-1687.67	-1039.46	-1587.93	254.27
1	303	39	-0.59	-3.16	-0.64	-3.11	-0.37	-6.09	-91.56	-41.47	-56.18	42.10
1	303	40	-0.40	-4.00	-0.41	-3.99	0.20	254.91	-28.75	-25.20	251.36	31.56
1	303	41	-0.43	-3.73	-0.43	-3.73	5.83e-02	256.41	-27.46	-27.33	256.28	-6.04
1	303	42	-0.45	-2.73	-0.49	-2.69	0.32	-80.45	-133.28	-83.99	-129.74	13.21
1	303	43	-0.27	-1.67	-0.30	-1.64	0.20	221.78	-742.81	221.49	-742.52	-16.90
1	303	44	-4.18e-02	-1.52	-0.51	-1.05	0.69	-91.41	-258.18	-91.45	-258.14	2.52
1	303	45	0.58	-1.59	-0.24	-0.77	1.05	24.08	-62.45	-45.85	7.47	34.08
1	303	46	0.50	-1.20	-0.25	-0.45	0.84	5.55	-16.37	-12.79	1.97	8.10
1	303	47	-0.25	-1.07	-0.48	-0.83	0.37	5.21	-50.81	-43.46	-2.15	18.92
1	303	48	-0.16	-1.58	-0.30	-1.43	0.43	114.93	-161.32	103.55	-149.94	54.90
1	303	49	-0.61	-2.29	-0.63	-2.28	0.15	164.97	-58.97	-49.06	155.05	46.06
1	303	50	-0.38	-2.65	-0.38	-2.65	-0.11	392.12	-41.76	-25.90	376.25	81.44
1	303	51	-0.48	-2.40	-0.48	-2.39	-0.13	338.31	-75.72	-28.27	290.87	131.88
1	303	52	-0.10	-1.44	-0.18	-1.36	-0.32	-53.12	-255.07	-103.69	-204.50	87.50
1	303	53	-0.13	-1.31	-0.36	-1.08	0.47	314.50	-1093.47	296.23	-1075.20	159.34
1	303	54	9.27e-02	-1.55	-0.55	-0.91	-0.80	-108.34	-480.81	-113.24	-475.91	42.43
1	303	55	0.61	-1.64	-0.22	-0.81	-1.08	31.20	-81.12	-59.53	9.61	-44.26
1	303	56	-0.60	-1.24	-1.18	-0.66	-0.19	195.56	-2.26	195.02	-1.73	10.29
1	303	57	-0.88	-1.02	-0.89	-1.01	-2.77e-02	222.58	-61.52	222.14	-61.08	-11.18
1	303	58	-0.64	-1.89	-0.67	-1.87	0.18	289.34	-106.25	283.48	-100.39	47.79
1	303	59	-1.15	-2.79	-1.15	-2.79	-4.77e-02	341.36	-29.39	293.04	18.93	124.82
1	303	60	-1.36	-3.64	-1.37	-3.63	0.14	355.62	133.50	300.94	188.17	95.68
1	303	61	-0.81	-3.76	-0.82	-3.76	-0.12	359.86	165.86	354.50	171.22	31.80
1	303	62	-0.30	-3.40	-0.33	-3.37	-0.27	438.65	-90.96	433.98	-86.29	-49.52
1	303	63	-0.18	-2.59	-0.18	-2.59	-5.41e-02	581.63	-312.23	578.87	-309.47	49.65
1	303	64	-0.63	-1.15	-0.83	-0.96	0.25	501.94	-15.28	497.32	-10.66	48.66
1	303	65	-0.40	-1.52	-0.40	-1.52	4.22e-02	547.30	-209.52	512.80	-175.02	157.86
1	303	66	-0.57	-1.16	-1.08	-0.66	0.21	254.83	-10.11	250.26	-5.54	34.50
1	303	67	-0.90	-1.05	-0.91	-1.05	2.17e-02	300.28	-52.13	272.57	-24.41	94.86
1	303	68	-0.60	-1.94	-0.70	-1.84	-0.34	338.88	-30.22	322.95	-14.28	75.01
1	303	69	-0.87	-2.72	-0.88	-2.71	-9.48e-02	344.99	92.07	323.14	113.92	71.06
1	303	70	-1.02	-3.22	-1.07	-3.17	-0.33	444.60	129.15	330.18	243.56	151.66
1	303	71	-0.80	-3.04	-0.80	-3.04	0.11	523.77	19.81	358.79	184.79	236.48
1	303	72	-0.66	-1.17	-0.85	-0.98	-0.24	431.86	-5.80	431.78	-5.72	5.79
1	303	73	-0.49	-1.47	-0.49	-1.47	6.93e-02	470.85	-257.00	467.13	-253.28	-51.91

Viale Duca Alessandro n. 11 – 43123 Parma
Cell. 335 1403156 – E mail ing.concari@gmail.com
Sito web: studioaire.it – P.IVA 02561480340

1	303	74	-0.25	-2.28	-0.25	-2.28	-3.87e-02	594.20	-445.90	573.19	-424.88	146.35
1	303	75	-0.30	-2.83	-0.34	-2.79	0.30	564.14	-280.38	417.13	-133.37	320.22
1	303	76	-0.51	-1.04	-0.59	-0.97	0.19	136.30	-40.72	71.65	23.93	85.23
1	303	77	-0.43	-0.98	-0.49	-0.92	-0.17	114.95	-21.29	75.89	17.77	61.61
1	303	78	-0.56	-2.56	-0.56	-2.56	5.53e-03	218.80	50.86	86.75	182.92	68.84
1	303	79	-0.63	-2.44	-0.64	-2.43	-0.10	275.75	39.32	88.72	226.35	96.12
1	303	80	-0.89	-2.69	-0.89	-2.69	8.54e-03	417.78	61.50	157.27	322.01	157.95
1	303	81	-0.47	-2.73	-0.47	-2.73	2.18e-02	436.13	33.53	127.11	342.54	170.06
1	303	82	-0.82	-2.49	-0.82	-2.49	4.87e-02	461.77	-58.44	146.61	256.72	254.21
1	303	83	-0.39	-2.49	-0.39	-2.49	0.11	463.78	-79.94	113.65	270.20	260.35
1	303	84	-0.39	-2.01	-0.41	-2.00	0.15	289.25	-338.29	-9.73	-39.31	313.42
1	303	85	-0.48	-1.83	-0.50	-1.80	0.18	251.94	-289.92	43.38	-81.36	263.65
1	303	86	8.22e-02	-1.46	7.61e-02	-1.45	-9.73e-02	-37.22	-234.01	-52.20	-219.03	-52.18
1	303	87	-0.29	-1.47	-0.34	-1.41	0.25	8.03	-108.47	7.79	-108.22	5.29
1	303	88	-0.87	-1.25	-1.15	-0.97	0.17	331.13	-33.72	326.02	-28.61	42.88
1	303	89	-0.78	-1.34	-1.10	-1.02	-0.27	336.83	-32.98	329.85	-26.00	50.32
1	303	90	-1.10	-1.58	-1.17	-1.51	0.17	380.29	-21.51	369.78	-10.99	64.14
1	303	91	-1.16	-1.85	-1.51	-1.49	-0.35	380.66	-17.22	370.00	-6.56	64.26
1	303	92	-1.22	-3.91	-1.22	-3.91	6.03e-02	465.38	140.58	410.61	195.35	121.61
1	303	93	-0.69	-3.91	-0.71	-3.89	-0.25	470.86	137.38	409.94	198.30	128.86
1	303	94	-0.81	-3.74	-0.82	-3.73	-0.18	526.41	106.55	483.82	149.14	126.76
1	303	95	-0.88	-3.58	-0.88	-3.58	-9.49e-02	539.96	93.47	483.78	149.65	148.07
1	303	96	-0.51	-3.33	-0.52	-3.32	-0.21	631.47	-81.64	611.25	-61.43	118.35
1	303	97	-0.52	-3.27	-0.52	-3.27	5.85e-02	640.44	-95.34	610.87	-65.78	144.50
1	303	98	-0.51	-1.56	-0.58	-1.49	-0.26	713.95	-150.23	707.68	-143.95	73.37
1	303	99	-0.54	-1.53	-0.59	-1.48	0.22	709.24	-153.91	705.00	-149.67	60.31
1	303	100	-0.42	-1.03	-0.55	-0.91	0.25	30.75	-53.32	27.30	-49.88	16.66
1	303	101	-0.62	-1.09	-0.78	-0.93	-0.23	13.39	-37.46	10.28	-34.35	-12.18
1	303	102	-0.53	-3.80	-0.54	-3.80	6.67e-02	272.25	68.83	93.87	247.22	66.82
1	303	103	-1.13	-3.74	-1.13	-3.74	-2.10e-02	267.86	88.59	121.07	235.37	69.05
1	303	104	-0.39	-3.63	-0.39	-3.63	3.15e-02	242.12	112.59	112.60	242.11	-1.16
1	303	105	-0.83	-3.59	-0.83	-3.58	8.72e-02	227.60	140.95	141.25	227.30	-5.07
1	303	106	-0.55	-2.93	-0.56	-2.92	-0.16	80.03	-3.51	68.41	8.10	-28.90
1	303	107	-0.25	-3.08	-0.25	-3.08	-3.78e-02	95.06	-59.20	37.54	-1.68	-74.60
1	303	108	-0.31	-1.41	-0.38	-1.34	-0.25	127.43	-92.50	86.78	-51.85	85.37
1	303	109	-4.41e-02	-1.44	-8.19e-02	-1.40	0.23	131.95	-178.16	60.75	-106.96	130.42
1	303	110	-0.61	-0.82	-0.70	-0.73	-0.11	41.37	5.73	37.74	9.35	10.77
1	303	111	-0.34	-1.16	-0.54	-0.96	-0.35	-38.75	-106.49	-44.45	-100.78	18.81
1	303	112	-0.42	-1.19	-0.42	-1.19	-2.89e-03	101.66	38.56	99.35	40.87	11.86
1	303	113	-0.52	-0.85	-0.62	-0.76	0.15	94.82	-1.19	92.09	1.53	15.94
1	303	114	-0.50	-1.16	-0.50	-1.16	-1.91e-02	165.84	18.19	163.53	20.50	18.33
1	303	115	-0.17	-1.90	-0.18	-1.90	9.25e-02	91.69	-255.09	62.63	-226.04	96.07
1	303	116	-0.47	-1.52	-1.06	-0.92	0.52	125.67	-7.29	117.26	1.12	32.37
1	303	117	-0.74	-1.52	-1.44	-0.82	0.24	295.94	-10.93	293.77	-8.76	25.71
1	303	118	-0.75	-1.51	-1.43	-0.84	-0.24	300.60	-10.73	298.80	-8.93	23.62
1	303	119	-0.47	-1.58	-1.12	-0.94	-0.55	54.87	7.47	54.83	7.51	-1.34
1	303	120	-0.18	-1.57	-0.23	-1.52	-0.27	121.45	-361.88	121.40	-361.83	4.89
1	303	121	-0.95	-2.88	-1.00	-2.82	-0.32	403.65	41.35	375.52	69.49	96.97
1	303	122	0.40	-1.85	0.40	-1.85	-1.73e-02	-327.96	-1372.23	-381.50	-1318.70	

Viale Duca Alessandro n. 11 – 43123 Parma
Cell. 335 1403156 – E mail ing.concari@gmail.com
Sito web: studioaire.it – P.IVA 02561480340

230.30												
1	303	123	-0.42	-2.59	-0.43	-2.58	0.13	729.94	-243.16	718.73	-231.95	
103.86												
1	303	124	-0.39	-2.63	-0.42	-2.60	-0.24	727.98	-234.78	718.34	-225.14	
95.85												
1	303	125	0.55	-1.17	-0.19	-0.43	-0.85	8.61	-13.86	-12.15	6.89	-5.97
1	303	126	-0.69	-1.47	-1.00	-1.15	-0.39	100.97	-11.68	99.33	-10.04	-
13.48												
1	303	127	-0.89	-1.48	-1.20	-1.16	0.30	669.12	-32.60	666.29	-29.77	
44.49												
1	303	128	-0.63	-1.56	-1.06	-1.13	0.46	200.42	-20.97	188.44	-8.99	
50.09												
1	303	129	-0.89	-1.46	-1.18	-1.16	-0.29	672.13	-30.76	671.63	-30.26	
18.77												
1	303	130	0.58	-2.37	0.57	-2.37	0.11	-221.21	-955.72	-221.21	-955.72	0.17
1	303	131	-0.34	-2.99	-0.36	-2.98	0.22	122.23	-71.85	13.41	36.97	
96.32												
1	303	132	-6.90e-02	-1.84	-7.48e-02	-1.84	-0.10	-44.86	-415.86	-45.93	-414.79	
19.82												
1	304	2	0.26	-2.28	0.26	-2.27	-9.01e-02	-738.30	-1154.74	-738.36	-1154.67	-5.09
1	304	6	-0.21	-1.85	-0.27	-1.80	0.30	-340.03	-525.17	-343.08	-522.12	
23.55												
1	304	7	-0.95	-2.90	-1.05	-2.80	0.42	386.58	27.25	357.52	56.32	
97.98												
1	304	8	-0.50	-2.98	-0.52	-2.97	-0.19	93.85	-137.21	-29.26	-14.10	
115.28												
1	304	32	-0.12	-1.85	-0.14	-1.84	-0.16	-145.56	-371.51	-211.88	-305.19	
102.89												
1	304	33	0.17	-1.74	0.16	-1.73	-0.13	-939.72	-1687.67	-1039.46	-1587.93	
254.27												
1	304	39	-0.59	-3.16	-0.64	-3.11	-0.37	-6.09	-91.56	-41.47	-56.18	
42.10												
1	304	40	-0.40	-4.00	-0.41	-3.99	0.20	254.91	-28.75	-25.20	251.36	
31.56												
1	304	41	-0.43	-3.73	-0.43	-3.73	5.83e-02	256.41	-27.46	-27.33	256.28	-6.04
1	304	42	-0.45	-2.73	-0.49	-2.69	0.32	-80.45	-133.28	-83.99	-129.74	
13.21												
1	304	43	-0.27	-1.67	-0.30	-1.64	0.20	221.78	-742.81	221.49	-742.52	-
16.90												
1	304	44	-4.18e-02	-1.52	-0.51	-1.05	0.69	-91.41	-258.18	-91.45	-258.14	2.52
1	304	45	0.58	-1.59	-0.24	-0.77	1.05	24.08	-62.45	-45.85	7.47	
34.08												
1	304	46	0.50	-1.20	-0.25	-0.45	0.84	5.55	-16.37	-12.79	1.97	8.10
1	304	47	-0.25	-1.07	-0.48	-0.83	0.37	5.21	-50.81	-43.46	-2.15	
18.92												
1	304	48	-0.16	-1.58	-0.30	-1.43	0.43	114.93	-161.32	103.55	-149.94	
54.90												
1	304	49	-0.61	-2.29	-0.63	-2.28	0.15	164.97	-58.97	-49.06	155.05	
46.06												
1	304	50	-0.38	-2.65	-0.38	-2.65	-0.11	392.12	-41.76	-25.90	376.25	
81.44												
1	304	51	-0.48	-2.40	-0.48	-2.39	-0.13	338.31	-75.72	-28.27	290.87	
131.88												
1	304	52	-0.10	-1.44	-0.18	-1.36	-0.32	-53.12	-255.07	-103.69	-204.50	
87.50												
1	304	53	-0.13	-1.31	-0.36	-1.08	0.47	314.50	-1093.47	296.23	-1075.20	
159.34												
1	304	54	9.27e-02	-1.55	-0.55	-0.91	-0.80	-108.34	-480.81	-113.24	-475.91	
42.43												
1	304	55	0.61	-1.64	-0.22	-0.81	-1.08	31.20	-81.12	-59.53	9.61	-
44.26												
1	304	56	-0.60	-1.24	-1.18	-0.66	-0.19	195.56	-2.26	195.02	-1.73	
10.29												
1	304	57	-0.88	-1.02	-0.89	-1.01	-2.77e-02	222.58	-61.52	222.14	-61.08	-
11.18												
1	304	58	-0.64	-1.89	-0.67	-1.87	0.18	289.34	-106.25	283.48	-100.39	
47.79												
1	304	59	-1.15	-2.79	-1.15	-2.79	-4.77e-02	341.36	-29.39	293.04	18.93	
124.82												
1	304	60	-1.36	-3.64	-1.37	-3.63	0.14	355.62	133.50	300.94	188.17	
95.68												
1	304	61	-0.81	-3.76	-0.82	-3.76	-0.12	359.86	165.86	354.50	171.22	
31.80												
1	304	62	-0.30	-3.40	-0.33	-3.37	-0.27	438.65	-90.96	433.98	-86.29	-
49.52												
1	304	63	-0.18	-2.59	-0.18	-2.59	-5.41e-02	581.63	-312.23	578.87	-309.47	
49.65												
1	304	64	-0.63	-1.15	-0.83	-0.96	0.25	501.94	-15.28	497.32	-10.66	
48.66												
1	304	65	-0.40	-1.52	-0.40	-1.52	4.22e-02	547.30	-209.52	512.80	-175.02	
157.86												
1	304	66	-0.57	-1.16	-1.08	-0.66	0.21	254.83	-10.11	250.26	-5.54	
34.50												
1	304	67	-0.90	-1.05	-0.91	-1.05	2.17e-02	300.28	-52.13	272.57	-24.41	
94.86												
1	304	68	-0.60	-1.94	-0.70	-1.84	-0.34	338.88	-30.22	322.95	-14.28	
75.01												
1	304	69	-0.87	-2.72	-0.88	-2.71	-9.48e-02	344.99	92.07	323.14	113.92	
71.06												
1	304	70	-1.02	-3.22	-1.07	-3.17	-0.33	444.60	129.15	330.18	243.56	
151.66												
1	304	71	-0.80	-3.04	-0.80	-3.04	0.11	523.77	19.81	358.79	184.79	

Viale Duca Alessandro n. 11 – 43123 Parma
Cell. 335 1403156 – E mail ing.concari@gmail.com
Sito web: studioaire.it – P.IVA 02561480340

236.48												
1	304	72	-0.66	-1.17	-0.85	-0.98	-0.24	431.86	-5.80	431.78	-5.72	5.79
1	304	73	-0.49	-1.47	-0.49	-1.47	6.93e-02	470.85	-257.00	467.13	-253.28	-
51.91												
1	304	74	-0.25	-2.28	-0.25	-2.28	-3.87e-02	594.20	-445.90	573.19	-424.88	
146.35												
1	304	75	-0.30	-2.83	-0.34	-2.79	0.30	564.14	-280.38	417.13	-133.37	
320.22												
1	304	76	-0.51	-1.04	-0.59	-0.97	0.19	136.30	-40.72	71.65	23.93	
85.23												
1	304	77	-0.43	-0.98	-0.49	-0.92	-0.17	114.95	-21.29	75.89	17.77	
61.61												
1	304	78	-0.56	-2.56	-0.56	-2.56	5.53e-03	218.80	50.86	86.75	182.92	
68.84												
1	304	79	-0.63	-2.44	-0.64	-2.43	-0.10	275.75	39.32	88.72	226.35	
96.12												
1	304	80	-0.89	-2.69	-0.89	-2.69	8.54e-03	417.78	61.50	157.27	322.01	
157.95												
1	304	81	-0.47	-2.73	-0.47	-2.73	2.18e-02	436.13	33.53	127.11	342.54	
170.06												
1	304	82	-0.82	-2.49	-0.82	-2.49	4.87e-02	461.77	-58.44	146.61	256.72	
254.21												
1	304	83	-0.39	-2.49	-0.39	-2.49	0.11	463.78	-79.94	113.65	270.20	
260.35												
1	304	84	-0.39	-2.01	-0.41	-2.00	0.15	289.25	-338.29	-9.73	-39.31	
313.42												
1	304	85	-0.48	-1.83	-0.50	-1.80	0.18	251.94	-289.92	43.38	-81.36	
263.65												
1	304	86	8.22e-02	-1.46	7.61e-02	-1.45	-9.73e-02	-37.22	-234.01	-52.20	-219.03	-
52.18												
1	304	87	-0.29	-1.47	-0.34	-1.41	0.25	8.03	-108.47	7.79	-108.22	5.29
1	304	88	-0.87	-1.25	-1.15	-0.97	0.17	331.13	-33.72	326.02	-28.61	
42.88												
1	304	89	-0.78	-1.34	-1.10	-1.02	-0.27	336.83	-32.98	329.85	-26.00	
50.32												
1	304	90	-1.10	-1.58	-1.17	-1.51	0.17	380.29	-21.51	369.78	-10.99	
64.14												
1	304	91	-1.16	-1.85	-1.51	-1.49	-0.35	380.66	-17.22	370.00	-6.56	
64.26												
1	304	92	-1.22	-3.91	-1.22	-3.91	6.03e-02	465.38	140.58	410.61	195.35	
121.61												
1	304	93	-0.69	-3.91	-0.71	-3.89	-0.25	470.86	137.38	409.94	198.30	
128.86												
1	304	94	-0.81	-3.74	-0.82	-3.73	-0.18	526.41	106.55	483.82	149.14	
126.76												
1	304	95	-0.88	-3.58	-0.88	-3.58	-9.49e-02	539.96	93.47	483.78	149.65	
148.07												
1	304	96	-0.51	-3.33	-0.52	-3.32	-0.21	631.47	-81.64	611.25	-61.43	
118.35												
1	304	97	-0.52	-3.27	-0.52	-3.27	5.85e-02	640.44	-95.34	610.87	-65.78	
144.50												
1	304	98	-0.51	-1.56	-0.58	-1.49	-0.26	713.95	-150.23	707.68	-143.95	
73.37												
1	304	99	-0.54	-1.53	-0.59	-1.48	0.22	709.24	-153.91	705.00	-149.67	
60.31												
1	304	100	-0.42	-1.03	-0.55	-0.91	0.25	30.75	-53.32	27.30	-49.88	
16.66												
1	304	101	-0.62	-1.09	-0.78	-0.93	-0.23	13.39	-37.46	10.28	-34.35	-
12.18												
1	304	102	-0.53	-3.80	-0.54	-3.80	6.67e-02	272.25	68.83	93.87	247.22	
66.82												
1	304	103	-1.13	-3.74	-1.13	-3.74	-2.10e-02	267.86	88.59	121.07	235.37	
69.05												
1	304	104	-0.39	-3.63	-0.39	-3.63	3.15e-02	242.12	112.59	112.60	242.11	-1.16
1	304	105	-0.83	-3.59	-0.83	-3.58	8.72e-02	227.60	140.95	141.25	227.30	-5.07
1	304	106	-0.55	-2.93	-0.56	-2.92	-0.16	80.03	-3.51	68.41	8.10	-
28.90												
1	304	107	-0.25	-3.08	-0.25	-3.08	-3.78e-02	95.06	-59.20	37.54	-1.68	-
74.60												
1	304	108	-0.31	-1.41	-0.38	-1.34	-0.25	127.43	-92.50	86.78	-51.85	
85.37												
1	304	109	-4.41e-02	-1.44	-8.19e-02	-1.40	0.23	131.95	-178.16	60.75	-106.96	
130.42												
1	304	110	-0.61	-0.82	-0.70	-0.73	-0.11	41.37	5.73	37.74	9.35	
10.77												
1	304	111	-0.34	-1.16	-0.54	-0.96	-0.35	-38.75	-106.49	-44.45	-100.78	
18.81												
1	304	112	-0.42	-1.19	-0.42	-1.19	-2.89e-03	101.66	38.56	99.35	40.87	
11.86												
1	304	113	-0.52	-0.85	-0.62	-0.76	0.15	94.82	-1.19	92.09	1.53	
15.94												
1	304	114	-0.50	-1.16	-0.50	-1.16	-1.91e-02	165.84	18.19	163.53	20.50	
18.33												
1	304	115	-0.17	-1.90	-0.18	-1.90	9.25e-02	91.69	-255.09	62.63	-226.04	
96.07												
1	304	116	-0.47	-1.52	-1.06	-0.92	0.52	125.67	-7.29	117.26	1.12	
32.37												
1	304	117	-0.74	-1.52	-1.44	-0.82	0.24	295.94	-10.93	293.77	-8.76	
25.71												
1	304	118	-0.75	-1.51	-1.43	-0.84	-0.24	300.60	-10.73	298.80	-8.93	
23.62												
1	304	119	-0.47	-1.58	-1.12	-0.94	-0.55	54.87	7.47	54.83	7.51	-1.34

Viale Duca Alessandro n. 11 – 43123 Parma
Cell. 335 1403156 – E mail ing.concari@gmail.com
Sito web: studioaire.it – P.IVA 02561480340

1	304	120	-0.18	-1.57	-0.23	-1.52	-0.27	121.45	-361.88	121.40	-361.83	4.89
1	304	121	-0.95	-2.88	-1.00	-2.82	-0.32	403.65	41.35	375.52	69.49	96.97
1	304	122	0.40	-1.85	0.40	-1.85	-1.73e-02	-327.96	-1372.23	-381.50	-1318.70	230.30
1	304	123	-0.42	-2.59	-0.43	-2.58	0.13	729.94	-243.16	718.73	-231.95	103.86
1	304	124	-0.39	-2.63	-0.42	-2.60	-0.24	727.98	-234.78	718.34	-225.14	95.85
1	304	125	0.55	-1.17	-0.19	-0.43	-0.85	8.61	-13.86	-12.15	6.89	-5.97
1	304	126	-0.69	-1.47	-1.00	-1.15	-0.39	100.97	-11.68	99.33	-10.04	-13.48
1	304	127	-0.89	-1.48	-1.20	-1.16	0.30	669.12	-32.60	666.29	-29.77	44.49
1	304	128	-0.63	-1.56	-1.06	-1.13	0.46	200.42	-20.97	188.44	-8.99	50.09
1	304	129	-0.89	-1.46	-1.18	-1.16	-0.29	672.13	-30.76	671.63	-30.26	18.77
1	304	130	0.58	-2.37	0.57	-2.37	0.11	-221.21	-955.72	-221.21	-955.72	0.17
1	304	131	-0.34	-2.99	-0.36	-2.98	0.22	122.23	-71.85	13.41	36.97	96.32
1	304	132	-6.90e-02	-1.84	-7.48e-02	-1.84	-0.10	-44.86	-415.86	-45.93	-414.79	19.82
1	327	2	0.21	7.18e-02	0.21	7.29e-02	-1.26e-02	-501.59	-757.43	-501.68	-757.34	5.00
1	327	6	0.21	0.10	0.21	0.10	1.81e-02	-260.05	-442.56	-269.57	-433.04	40.57
1	327	7	0.34	5.60e-02	0.30	9.66e-02	-9.96e-02	216.84	-58.13	197.37	-38.66	70.52
1	327	8	0.33	3.40e-02	0.33	3.63e-02	-2.58e-02	55.30	-132.20	-30.41	-46.49	93.40
1	327	32	0.28	7.91e-02	0.27	8.26e-02	2.62e-02	-161.17	-306.55	-182.91	-284.82	51.84
1	327	33	0.20	0.13	0.20	0.14	-1.99e-02	-678.14	-1111.64	-716.30	-1073.48	122.82
1	327	39	0.23	6.37e-03	0.18	5.74e-02	9.34e-02	-11.92	-90.60	-32.18	-70.34	34.40
1	327	40	-8.22e-02	-0.30	-8.32e-02	-0.30	1.50e-02	157.49	-22.52	-17.64	152.61	29.23
1	327	41	-5.97e-02	-0.20	-6.03e-02	-0.20	-9.26e-03	168.11	-17.92	-17.82	168.02	4.21
1	327	42	0.19	7.41e-02	0.13	0.14	-6.03e-02	-42.32	-90.46	-50.41	-82.37	18.00
1	327	43	0.20	-6.94e-02	-1.80e-02	0.15	-0.11	131.58	-470.87	131.53	-470.82	-5.41
1	327	44	0.19	2.19e-02	8.72e-02	0.13	8.21e-02	-54.24	-163.39	-54.35	-163.28	-3.44
1	327	45	-2.85e-02	-8.31e-02	-8.24e-02	-2.93e-02	6.47e-03	14.58	-37.40	-27.12	4.30	20.70
1	327	46	-3.88e-02	-0.11	-0.11	-3.94e-02	-6.37e-03	5.86	-17.14	-12.90	1.62	8.92
1	327	47	0.21	5.64e-02	0.12	0.14	7.46e-02	-19.85	-46.93	-35.76	-31.02	13.34
1	327	48	0.18	-2.16e-02	-2.00e-02	0.18	1.78e-02	87.24	-162.59	84.67	-160.03	25.18
1	327	49	0.25	5.80e-02	0.13	0.18	-9.46e-02	88.51	-45.06	-38.39	81.83	29.11
1	327	50	-4.21e-02	-6.62e-02	-6.36e-02	-4.47e-02	-7.45e-03	249.26	-28.16	-18.44	239.54	51.02
1	327	51	3.51e-02	-6.42e-02	-6.42e-02	3.51e-02	-1.86e-03	210.70	-51.80	-20.28	179.18	85.32
1	327	52	0.34	0.15	0.17	0.32	6.04e-02	-43.49	-205.00	-65.47	-183.01	55.38
1	327	53	0.31	-0.12	-2.64e-02	0.22	0.18	192.01	-721.81	186.63	-716.43	69.94
1	327	54	0.21	1.32e-02	8.08e-02	0.14	-9.25e-02	-64.07	-290.27	-69.81	-284.53	35.58
1	327	55	-3.03e-02	-8.31e-02	-8.12e-02	-3.22e-02	-9.81e-03	18.95	-46.25	-33.42	6.12	-25.92
1	327	56	0.39	-4.99e-03	0.39	-2.14e-03	-3.34e-02	147.73	-2.05	147.34	-1.66	7.69
1	327	57	0.46	-0.11	0.41	-6.40e-02	-0.16	165.85	-57.08	165.68	-56.90	-6.24
1	327	58	0.39	-8.74e-02	0.36	-5.89e-02	-0.11	209.61	-111.58	202.87	-104.84	46.02
1	327	59	0.32	2.57e-02	0.27	7.99e-02	0.12	244.73	-65.56	209.30	-30.12	98.69
1	327	60	0.31	9.59e-02	0.20	0.21	-0.11	236.51	65.68	198.19	104.00	71.26
1	327	61	0.34	2.68e-02	0.15	0.22	-0.15	237.92	102.89	231.30	109.52	29.16
1	327	62	0.36	2.16e-02	0.26	0.12	-0.15	279.97	-61.47	277.68	-59.17	-27.88
1	327	63	0.31	2.81e-02	0.30	4.07e-02	-5.83e-02	376.05	-211.79	374.01	-209.75	34.59
1	327	64	9.98e-02	-1.39e-02	9.73e-02	-1.15e-02	1.66e-02	315.48	-9.20	312.58	-6.30	30.57
1	327	65	0.23	-2.29e-02	0.22	-1.97e-02	-2.80e-02	344.62	-139.05	321.56	-115.99	103.06
1	327	66	0.35	-1.32e-02	0.34	-9.73e-03	3.50e-02	189.17	-7.26	186.18	-4.26	24.07
1	327	67	0.46	-7.39e-02	0.43	-4.11e-02	0.13	218.57	-48.85	201.16	-31.44	65.96
1	327	68	0.45	-0.11	0.40	-6.06e-02	0.15	240.28	-50.32	234.30	-44.34	41.25
1	327	69	0.32	8.25e-02	0.32	8.56e-02	2.68e-02	236.79	32.72	228.55	40.96	40.16
1	327	70	0.37	0.11	0.19	0.28	0.12	293.93	69.92	220.91	142.95	105.00

Viale Duca Alessandro n. 11 – 43123 Parma
Cell. 335 1403156 – E mail ing.concari@gmail.com
Sito web: studioaire.it – P.IVA 02561480340

1	327	71	0.33	7.03e-02	0.13	0.26	0.11	344.92	1.54	233.51	112.95	160.76	
1	327	72	9.54e-02	-1.63e-02	9.29e-02	-1.38e-02	-1.66e-02	272.20	-3.47	272.19	-3.46	1.50	
1	327	73	0.22	-1.90e-02	0.21	-1.36e-02	3.53e-02	295.81	-168.19	291.95	-164.33	-42.11	
1	327	74	0.30	6.41e-02	0.29	7.09e-02	3.96e-02	382.26	-306.38	371.07	-295.20	87.05	
1	327	75	0.37	6.71e-02	0.26	0.17	0.14	362.57	-203.25	266.63	-107.30	212.33	
1	327	76	0.34	3.60e-04	0.33	1.63e-02	7.19e-02	86.82	-42.38	44.58	-0.13	60.61	
1	327	77	0.12	2.50e-02	0.12	2.79e-02	1.65e-02	76.96	-19.30	51.21	6.45	42.61	
1	327	78	0.30	8.82e-02	0.30	9.04e-02	2.16e-02	123.28	36.94	58.24	101.98	37.22	
1	327	79	0.12	4.24e-02	0.10	6.41e-02	3.56e-02	159.56	27.15	62.79	123.92	58.73	
1	327	80	0.20	4.71e-02	5.91e-02	0.19	4.18e-02	265.36	42.99	107.02	201.33	100.69	
1	327	81	0.15	7.88e-02	8.43e-02	0.14	1.83e-02	277.96	24.33	86.83	215.46	109.30	
1	327	82	0.29	-5.62e-03	4.54e-02	0.24	0.11	293.81	-43.48	93.18	157.16	165.58	
1	327	83	0.25	1.44e-02	5.99e-02	0.20	9.26e-02	300.26	-55.40	75.19	169.68	171.44	
1	327	84	0.35	8.83e-02	0.19	0.24	0.13	172.24	-245.38	-17.80	-55.35	207.96	
1	327	85	0.26	5.74e-02	7.67e-02	0.24	5.97e-02	164.13	-197.69	17.09	-50.65	177.71	
1	327	86	0.28	-4.02e-02	0.27	-2.96e-02	5.76e-02	-18.77	-139.24	-29.60	-128.42	-34.46	
1	327	87	9.61e-02	-5.25e-02	8.55e-02	-4.19e-02	3.84e-02	7.18	-85.89	7.01	-85.72	3.96	
1	327	88	0.44	-9.62e-02	0.44	-9.62e-02	3.75e-03	245.66	-31.70	242.24	-28.28	30.60	
1	327	89	0.42	-6.99e-02	0.42	-6.10e-02	6.59e-02	249.17	-31.36	244.72	-26.91	35.06	
1	327	90	0.39	-0.21	0.39	-0.21	-2.41e-02	267.84	-37.11	260.49	-29.76	46.77	
1	327	91	0.58	-0.23	0.57	-0.22	0.10	264.07	-34.90	257.92	-28.75	42.42	
1	327	92	0.40	0.15	0.16	0.40	-3.16e-02	307.56	77.11	268.23	116.43	86.69	
1	327	93	0.43	-1.86e-02	-1.25e-03	0.41	8.66e-02	310.18	70.99	264.88	116.29	93.72	
1	327	94	0.30	0.13	0.13	0.29	-1.88e-02	348.76	61.08	317.18	92.66	89.93	
1	327	95	0.28	0.14	0.15	0.27	4.09e-02	357.84	51.14	316.97	92.00	104.23	
1	327	96	0.24	0.14	0.23	0.15	-2.41e-02	413.58	-61.80	399.60	-47.82	80.31	
1	327	97	0.24	0.14	0.23	0.15	1.03e-02	419.54	-71.81	399.54	-51.82	97.07	
1	327	98	0.20	6.49e-03	0.20	6.68e-03	-6.11e-03	456.51	-100.88	453.01	-97.38	44.02	
1	327	99	0.20	7.35e-03	0.20	7.38e-03	-2.34e-03	453.35	-103.33	451.20	-101.18	34.52	
1	327	100	0.11	3.83e-02	0.10	4.33e-02	-1.81e-02	19.57	-43.87	16.72	-41.02	13.13	
1	327	101	0.31	-6.09e-03	0.27	3.28e-02	-0.10	2.49	-43.80	0.84	-42.14	-8.59	
1	327	102	9.75e-02	-7.94e-03	9.61e-02	-6.56e-03	1.20e-02	179.21	32.85	62.44	149.62	58.78	
1	327	103	8.42e-02	1.27e-02	6.02e-02	3.68e-02	-3.38e-02	179.83	44.40	81.95	142.27	60.63	
1	327	104	0.15	-3.91e-02	6.38e-02	5.04e-02	-9.59e-02	160.47	73.26	74.96	158.77	12.07	
1	327	105	0.19	-4.86e-02	5.01e-02	9.44e-02	-0.12	149.36	91.74	93.28	147.82	9.28	
1	327	106	0.17	7.48e-03	6.64e-02	0.11	-7.65e-02	47.35	8.36	43.45	12.26	-11.70	
1	327	107	0.31	1.84e-02	0.21	0.11	-0.14	55.68	-28.28	26.32	1.07	-40.04	
1	327	108	9.64e-02	-5.14e-02	8.32e-02	-3.81e-02	-4.22e-02	81.76	-60.91	53.42	-32.58	56.92	
1	327	109	0.27	-3.40e-02	0.26	-2.63e-02	-4.76e-02	85.31	-112.84	38.84	-66.37	83.96	
1	327	110	0.12	-7.45e-02	0.11	-6.03e-02	5.13e-02	32.98	5.18	29.79	8.37	8.85	
1	327	111	0.20	4.91e-02	0.12	0.14	-7.65e-02	-34.56	-104.03	-36.86	-101.73	12.43	
1	327	112	9.39e-02	-6.11e-02	8.83e-02	-5.55e-02	2.89e-02	61.78	22.22	60.38	23.62	7.31	
1	327	113	0.13	-7.84e-02	0.11	-6.48e-02	-5.07e-02	69.65	1.32	68.07	2.89	10.25	
1	327	114	9.08e-02	-6.25e-02	8.30e-02	-5.47e-02	-3.36e-02	103.75	11.91	101.81	13.85	13.22	
1	327	115	0.57	4.65e-02	0.56	5.23e-02	5.47e-02	46.06	-228.51	37.12	-219.57	48.74	
1	327	116	0.11	2.85e-02	5.49e-02	8.20e-02	-3.75e-02	89.73	-6.42	83.79	-0.48	23.15	
1	327	117	0.49	-1.54e-03	0.49	-1.36e-03	-9.37e-03	224.66	-9.27	223.03	-7.64	19.45	
1	327	118	0.49	5.44e-03	0.49	6.25e-03	1.97e-02	227.48	-8.97	226.46	-7.94	15.53	
1	327	119	9.80e-02	4.88e-02	6.71e-02	7.97e-02	2.37e-02	39.72	4.09	39.69	4.12	-1.09	
1	327	120	0.24	-1.81e-02	-1.20e-02	0.23	3.87e-02	98.61	-311.50	97.69	-310.59		

Viale Duca Alessandro n. 11 – 43123 Parma
Cell. 335 1403156 – E mail ing.concari@gmail.com
Sito web: studioaire.it – P.IVA 02561480340

19.39												
1	327	121	0.35	5.12e-02	0.31	9.27e-02	0.10	249.55	-37.73	232.39	-20.57	
68.07												
1	327	122	0.43	9.38e-02	0.41	0.12	8.23e-02	-290.66	-919.15	-311.49	-898.32	
112.50												
1	327	123	0.27	5.05e-02	0.27	5.05e-02	-2.47e-03	472.94	-167.44	466.28	-160.79	
64.94												
1	327	124	0.27	4.79e-02	0.27	4.88e-02	-1.47e-02	471.70	-161.45	465.90	-155.65	
60.32												
1	327	125	-3.43e-02	-0.11	-0.11	-3.48e-02	6.21e-03	7.97	-15.61	-12.81	5.17	-7.62
1	327	126	0.11	-1.42e-02	2.59e-02	6.55e-02	5.64e-02	66.80	-6.61	64.93	-4.75	-
11.54												
1	327	127	8.21e-02	-8.24e-04	8.21e-02	-8.23e-04	3.73e-04	424.63	-20.60	423.04	-19.02	
26.53												
1	327	128	0.10	-9.13e-03	2.27e-02	6.94e-02	-5.00e-02	124.34	-14.69	116.79	-7.13	
31.51												
1	327	129	8.38e-02	-1.59e-03	8.38e-02	-1.58e-03	-7.81e-04	426.80	-19.60	426.56	-19.36	
10.31												
1	327	130	0.45	3.68e-02	0.44	5.35e-02	-8.16e-02	-201.98	-633.54	-202.10	-633.41	7.43
1	327	131	0.23	-3.53e-02	0.23	-3.52e-02	5.77e-03	72.13	-85.61	6.26	-19.74	
77.79												
1	327	132	0.58	5.99e-02	0.58	6.53e-02	-5.25e-02	-26.64	-351.73	-30.56	-347.81	
35.46												
1	328	2	0.21	7.18e-02	0.21	7.29e-02	-1.26e-02	-501.59	-757.43	-501.68	-757.34	5.00
1	328	6	0.21	0.10	0.21	0.10	1.81e-02	-260.05	-442.56	-269.57	-433.04	
40.57												
1	328	7	0.34	5.60e-02	0.30	9.66e-02	-9.96e-02	216.84	-58.13	197.37	-38.66	
70.52												
1	328	8	0.33	3.40e-02	0.33	3.63e-02	-2.58e-02	55.30	-132.20	-30.41	-46.49	
93.40												
1	328	32	0.28	7.91e-02	0.27	8.26e-02	2.62e-02	-161.17	-306.55	-182.91	-284.82	
51.84												
1	328	33	0.20	0.13	0.20	0.14	-1.99e-02	-678.14	-1111.64	-716.30	-1073.48	
122.82												
1	328	39	0.23	6.37e-03	0.18	5.74e-02	9.34e-02	-11.92	-90.60	-32.18	-70.34	
34.40												
1	328	40	-8.22e-02	-0.30	-8.32e-02	-0.30	1.50e-02	157.49	-22.52	-17.64	152.61	
29.23												
1	328	41	-5.97e-02	-0.20	-6.03e-02	-0.20	-9.26e-03	168.11	-17.92	-17.82	168.02	4.21
1	328	42	0.19	7.41e-02	0.13	0.14	-6.03e-02	-42.32	-90.46	-50.41	-82.37	
18.00												
1	328	43	0.20	-6.94e-02	-1.80e-02	0.15	-0.11	131.58	-470.87	131.53	-470.82	-5.41
1	328	44	0.19	2.19e-02	8.72e-02	0.13	8.21e-02	-54.24	-163.39	-54.35	-163.28	-3.44
1	328	45	-2.85e-02	-8.31e-02	-8.24e-02	-2.93e-02	6.47e-03	14.58	-37.40	-27.12	4.30	
20.70												
1	328	46	-3.88e-02	-0.11	-0.11	-3.94e-02	-6.37e-03	5.86	-17.14	-12.90	1.62	8.92
1	328	47	0.21	5.64e-02	0.12	0.14	7.46e-02	-19.85	-46.93	-35.76	-31.02	
13.34												
1	328	48	0.18	-2.16e-02	-2.00e-02	0.18	1.78e-02	87.24	-162.59	84.67	-160.03	
25.18												
1	328	49	0.25	5.80e-02	0.13	0.18	-9.46e-02	88.51	-45.06	-38.39	81.83	
29.11												
1	328	50	-4.21e-02	-6.62e-02	-6.36e-02	-4.47e-02	-7.45e-03	249.26	-28.16	-18.44	239.54	
51.02												
1	328	51	3.51e-02	-6.42e-02	-6.42e-02	3.51e-02	-1.86e-03	210.70	-51.80	-20.28	179.18	
85.32												
1	328	52	0.34	0.15	0.17	0.32	6.04e-02	-43.49	-205.00	-65.47	-183.01	
55.38												
1	328	53	0.31	-0.12	-2.64e-02	0.22	0.18	192.01	-721.81	186.63	-716.43	
69.94												
1	328	54	0.21	1.32e-02	8.08e-02	0.14	-9.25e-02	-64.07	-290.27	-69.81	-284.53	
35.58												
1	328	55	-3.03e-02	-8.31e-02	-8.12e-02	-3.22e-02	-9.81e-03	18.95	-46.25	-33.42	6.12	-
25.92												
1	328	56	0.39	-4.99e-03	0.39	-2.14e-03	-3.34e-02	147.73	-2.05	147.34	-1.66	7.69
1	328	57	0.46	-0.11	0.41	-6.40e-02	-0.16	165.85	-57.08	165.68	-56.90	-6.24
1	328	58	0.39	-8.74e-02	0.36	-5.89e-02	-0.11	209.61	-111.58	202.87	-104.84	
46.02												
1	328	59	0.32	2.57e-02	0.27	7.99e-02	0.12	244.73	-65.56	209.30	-30.12	
98.69												
1	328	60	0.31	9.59e-02	0.20	0.21	-0.11	236.51	65.68	198.19	104.00	
71.26												
1	328	61	0.34	2.68e-02	0.15	0.22	-0.15	237.92	102.89	231.30	109.52	
29.16												
1	328	62	0.36	2.16e-02	0.26	0.12	-0.15	279.97	-61.47	277.68	-59.17	-
27.88												
1	328	63	0.31	2.81e-02	0.30	4.07e-02	-5.83e-02	376.05	-211.79	374.01	-209.75	
34.59												
1	328	64	9.98e-02	-1.39e-02	9.73e-02	-1.15e-02	1.66e-02	315.48	-9.20	312.58	-6.30	
30.57												
1	328	65	0.23	-2.29e-02	0.22	-1.97e-02	-2.80e-02	344.62	-139.05	321.56	-115.99	
103.06												
1	328	66	0.35	-1.32e-02	0.34	-9.73e-03	3.50e-02	189.17	-7.26	186.18	-4.26	
24.07												
1	328	67	0.46	-7.39e-02	0.43	-4.11e-02	0.13	218.57	-48.85	201.16	-31.44	
65.96												
1	328	68	0.45	-0.11	0.40	-6.06e-02	0.15	240.28	-50.32	234.30	-44.34	
41.25												
1	328	69	0.32	8.25e-02	0.32	8.56e-02	2.68e-02	236.79	32.72	228.55	40.96	
40.16												
1	328	70	0.37	0.11	0.19	0.28	0.12	293.93	69.92	220.91	142.95	
105.00												

Viale Duca Alessandro n. 11 – 43123 Parma
Cell. 335 1403156 – E mail ing.concari@gmail.com
Sito web: studioaire.it – P.IVA 02561480340

1	328	71	0.33	7.03e-02	0.13	0.26	0.11	344.92	1.54	233.51	112.95	160.76
1	328	72	9.54e-02	-1.63e-02	9.29e-02	-1.38e-02	-1.66e-02	272.20	-3.47	272.19	-3.46	1.50
1	328	73	0.22	-1.90e-02	0.21	-1.36e-02	3.53e-02	295.81	-168.19	291.95	-164.33	-42.11
1	328	74	0.30	6.41e-02	0.29	7.09e-02	3.96e-02	382.26	-306.38	371.07	-295.20	87.05
1	328	75	0.37	6.71e-02	0.26	0.17	0.14	362.57	-203.25	266.63	-107.30	212.33
1	328	76	0.34	3.60e-04	0.33	1.63e-02	7.19e-02	86.82	-42.38	44.58	-0.13	60.61
1	328	77	0.12	2.50e-02	0.12	2.79e-02	1.65e-02	76.96	-19.30	51.21	6.45	42.61
1	328	78	0.30	8.82e-02	0.30	9.04e-02	2.16e-02	123.28	36.94	58.24	101.98	37.22
1	328	79	0.12	4.24e-02	0.10	6.41e-02	3.56e-02	159.56	27.15	62.79	123.92	58.73
1	328	80	0.20	4.71e-02	5.91e-02	0.19	4.18e-02	265.36	42.99	107.02	201.33	100.69
1	328	81	0.15	7.88e-02	8.43e-02	0.14	1.83e-02	277.96	24.33	86.83	215.46	109.30
1	328	82	0.29	-5.62e-03	4.54e-02	0.24	0.11	293.81	-43.48	93.18	157.16	165.58
1	328	83	0.25	1.44e-02	5.99e-02	0.20	9.26e-02	300.26	-55.40	75.19	169.68	171.44
1	328	84	0.35	8.83e-02	0.19	0.24	0.13	172.24	-245.38	-17.80	-55.35	207.96
1	328	85	0.26	5.74e-02	7.67e-02	0.24	5.97e-02	164.13	-197.69	17.09	-50.65	177.71
1	328	86	0.28	-4.02e-02	0.27	-2.96e-02	5.76e-02	-18.77	-139.24	-29.60	-128.42	-34.46
1	328	87	9.61e-02	-5.25e-02	8.55e-02	-4.19e-02	3.84e-02	7.18	-85.89	7.01	-85.72	3.96
1	328	88	0.44	-9.62e-02	0.44	-9.62e-02	3.75e-03	245.66	-31.70	242.24	-28.28	30.60
1	328	89	0.42	-6.99e-02	0.42	-6.10e-02	6.59e-02	249.17	-31.36	244.72	-26.91	35.06
1	328	90	0.39	-0.21	0.39	-0.21	-2.41e-02	267.84	-37.11	260.49	-29.76	46.77
1	328	91	0.58	-0.23	0.57	-0.22	0.10	264.07	-34.90	257.92	-28.75	42.42
1	328	92	0.40	0.15	0.16	0.40	-3.16e-02	307.56	77.11	268.23	116.43	86.69
1	328	93	0.43	-1.86e-02	-1.25e-03	0.41	8.66e-02	310.18	70.99	264.88	116.29	93.72
1	328	94	0.30	0.13	0.13	0.29	-1.88e-02	348.76	61.08	317.18	92.66	89.93
1	328	95	0.28	0.14	0.15	0.27	4.09e-02	357.84	51.14	316.97	92.00	104.23
1	328	96	0.24	0.14	0.23	0.15	-2.41e-02	413.58	-61.80	399.60	-47.82	80.31
1	328	97	0.24	0.14	0.23	0.15	1.03e-02	419.54	-71.81	399.54	-51.82	97.07
1	328	98	0.20	6.49e-03	0.20	6.68e-03	-6.11e-03	456.51	-100.88	453.01	-97.38	44.02
1	328	99	0.20	7.35e-03	0.20	7.38e-03	-2.34e-03	453.35	-103.33	451.20	-101.18	34.52
1	328	100	0.11	3.83e-02	0.10	4.33e-02	-1.81e-02	19.57	-43.87	16.72	-41.02	13.13
1	328	101	0.31	-6.09e-03	0.27	3.28e-02	-0.10	2.49	-43.80	0.84	-42.14	-8.59
1	328	102	9.75e-02	-7.94e-03	9.61e-02	-6.56e-03	1.20e-02	179.21	32.85	62.44	149.62	58.78
1	328	103	8.42e-02	1.27e-02	6.02e-02	3.68e-02	-3.38e-02	179.83	44.40	81.95	142.27	60.63
1	328	104	0.15	-3.91e-02	6.38e-02	5.04e-02	-9.59e-02	160.47	73.26	74.96	158.77	12.07
1	328	105	0.19	-4.86e-02	5.01e-02	9.44e-02	-0.12	149.36	91.74	93.28	147.82	9.28
1	328	106	0.17	7.48e-03	6.64e-02	0.11	-7.65e-02	47.35	8.36	43.45	12.26	-11.70
1	328	107	0.31	1.84e-02	0.21	0.11	-0.14	55.68	-28.28	26.32	1.07	-40.04
1	328	108	9.64e-02	-5.14e-02	8.32e-02	-3.81e-02	-4.22e-02	81.76	-60.91	53.42	-32.58	56.92
1	328	109	0.27	-3.40e-02	0.26	-2.63e-02	-4.76e-02	85.31	-112.84	38.84	-66.37	83.96
1	328	110	0.12	-7.45e-02	0.11	-6.03e-02	5.13e-02	32.98	5.18	29.79	8.37	8.85
1	328	111	0.20	4.91e-02	0.12	0.14	-7.65e-02	-34.56	-104.03	-36.86	-101.73	12.43
1	328	112	9.39e-02	-6.11e-02	8.83e-02	-5.55e-02	2.89e-02	61.78	22.22	60.38	23.62	7.31
1	328	113	0.13	-7.84e-02	0.11	-6.48e-02	-5.07e-02	69.65	1.32	68.07	2.89	10.25
1	328	114	9.08e-02	-6.25e-02	8.30e-02	-5.47e-02	-3.36e-02	103.75	11.91	101.81	13.85	13.22
1	328	115	0.57	4.65e-02	0.56	5.23e-02	5.47e-02	46.06	-228.51	37.12	-219.57	48.74
1	328	116	0.11	2.85e-02	5.49e-02	8.20e-02	-3.75e-02	89.73	-6.42	83.79	-0.48	23.15
1	328	117	0.49	-1.54e-03	0.49	-1.36e-03	-9.37e-03	224.66	-9.27	223.03	-7.64	19.45
1	328	118	0.49	5.44e-03	0.49	6.25e-03	1.97e-02	227.48	-8.97	226.46	-7.94	15.53
1	328	119	9.80e-02	4.88e-02	6.71e-02	7.97e-02	2.37e-02	39.72	4.09	39.69	4.12	-1.09
1	328	120	0.24	-1.81e-02	-1.20e-02	0.23	3.87e-02	98.61	-311.50	97.69	-310.59	

Viale Duca Alessandro n. 11 – 43123 Parma
Cell. 335 1403156 – E mail ing.concari@gmail.com
Sito web: studioaire.it – P.IVA 02561480340

19.39												
1	328	121	0.35	5.12e-02	0.31	9.27e-02	0.10	249.55	-37.73	232.39	-20.57	
68.07												
1	328	122	0.43	9.38e-02	0.41	0.12	8.23e-02	-290.66	-919.15	-311.49	-898.32	
112.50												
1	328	123	0.27	5.05e-02	0.27	5.05e-02	-2.47e-03	472.94	-167.44	466.28	-160.79	
64.94												
1	328	124	0.27	4.79e-02	0.27	4.88e-02	-1.47e-02	471.70	-161.45	465.90	-155.65	
60.32												
1	328	125	-3.43e-02	-0.11	-0.11	-3.48e-02	6.21e-03	7.97	-15.61	-12.81	5.17	-7.62
1	328	126	0.11	-1.42e-02	2.59e-02	6.55e-02	5.64e-02	66.80	-6.61	64.93	-4.75	-
11.54												
1	328	127	8.21e-02	-8.24e-04	8.21e-02	-8.23e-04	3.73e-04	424.63	-20.60	423.04	-19.02	
26.53												
1	328	128	0.10	-9.13e-03	2.27e-02	6.94e-02	-5.00e-02	124.34	-14.69	116.79	-7.13	
31.51												
1	328	129	8.38e-02	-1.59e-03	8.38e-02	-1.58e-03	-7.81e-04	426.80	-19.60	426.56	-19.36	
10.31												
1	328	130	0.45	3.68e-02	0.44	5.35e-02	-8.16e-02	-201.98	-633.54	-202.10	-633.41	7.43
1	328	131	0.23	-3.53e-02	0.23	-3.52e-02	5.77e-03	72.13	-85.61	6.26	-19.74	
77.79												
1	328	132	0.58	5.99e-02	0.58	6.53e-02	-5.25e-02	-26.64	-351.73	-30.56	-347.81	
35.46												
1	331	2	0.23	8.01e-02	0.23	8.13e-02	-1.37e-02	-549.26	-829.83	-549.38	-829.71	5.74
1	331	6	0.24	0.11	0.23	0.12	1.99e-02	-284.20	-484.91	-294.76	-474.35	
44.82												
1	331	7	0.38	6.21e-02	0.33	0.11	-0.11	236.58	-65.48	214.90	-43.79	
77.97												
1	331	8	0.36	3.82e-02	0.36	4.07e-02	-2.82e-02	59.83	-146.68	-34.18	-52.66	
102.84												
1	331	32	0.30	8.75e-02	0.30	9.14e-02	2.89e-02	-174.70	-334.71	-198.96	-310.45	
57.38												
1	331	33	0.23	0.15	0.22	0.15	-2.20e-02	-744.65	-1221.84	-786.95	-1179.54	
135.64												
1	331	39	0.25	7.28e-03	0.20	6.40e-02	0.10	-13.00	-100.49	-35.18	-78.30	
38.06												
1	331	40	-9.09e-02	-0.33	-9.20e-02	-0.33	1.64e-02	171.85	-24.82	-19.35	166.39	
32.33												
1	331	41	-6.61e-02	-0.22	-6.68e-02	-0.22	-1.02e-02	184.00	-19.66	-19.54	183.88	4.94
1	331	42	0.22	8.29e-02	0.15	0.15	-6.69e-02	-46.18	-99.12	-55.30	-90.00	
20.00												
1	331	43	0.22	-7.72e-02	-2.00e-02	0.17	-0.12	144.29	-515.85	144.23	-515.79	-5.88
1	331	44	0.21	2.42e-02	9.66e-02	0.14	9.11e-02	-59.54	-178.99	-59.64	-178.88	-3.56
1	331	45	-3.16e-02	-9.22e-02	-9.13e-02	-3.25e-02	7.19e-03	16.00	-41.07	-29.79	4.71	
22.73												
1	331	46	-4.29e-02	-0.12	-0.12	-4.35e-02	-7.03e-03	6.41	-18.78	-14.13	1.76	9.77
1	331	47	0.23	6.23e-02	0.14	0.15	8.24e-02	-21.18	-51.42	-39.20	-33.40	
14.84												
1	331	48	0.20	-2.39e-02	-2.21e-02	0.20	1.95e-02	95.62	-177.18	92.73	-174.29	
27.91												
1	331	49	0.28	6.41e-02	0.15	0.20	-0.10	97.66	-49.51	-42.09	90.24	
32.20												
1	331	50	-4.65e-02	-7.31e-02	-7.03e-02	-4.94e-02	-8.24e-03	273.51	-31.08	-20.23	262.66	
56.45												
1	331	51	3.89e-02	-7.11e-02	-7.11e-02	3.88e-02	-2.07e-03	231.16	-57.20	-22.25	196.21	
94.11												
1	331	52	0.38	0.16	0.19	0.36	6.70e-02	-47.61	-225.74	-71.93	-201.42	
61.16												
1	331	53	0.35	-0.13	-2.92e-02	0.24	0.20	211.08	-793.46	205.10	-787.49	
77.24												
1	331	54	0.23	1.46e-02	8.96e-02	0.15	-0.10	-70.38	-319.32	-76.70	-313.00	
39.16												
1	331	55	-3.36e-02	-9.21e-02	-9.00e-02	-3.56e-02	-1.09e-02	20.83	-50.84	-36.74	6.73	-
28.49												
1	331	56	0.43	-5.52e-03	0.43	-2.37e-03	-3.69e-02	161.54	-2.26	161.09	-1.81	8.60
1	331	57	0.51	-0.13	0.46	-7.07e-02	-0.18	181.38	-62.51	181.21	-62.34	-6.43
1	331	58	0.43	-9.65e-02	0.40	-6.50e-02	-0.12	229.30	-122.70	221.79	-115.19	
50.87												
1	331	59	0.36	2.88e-02	0.30	8.88e-02	0.13	268.41	-73.02	229.37	-33.98	
108.65												
1	331	60	0.35	0.11	0.22	0.24	-0.12	259.45	70.80	217.01	113.25	
78.77												
1	331	61	0.38	3.02e-02	0.16	0.25	-0.17	261.17	112.18	253.59	119.76	
32.74												
1	331	62	0.40	2.44e-02	0.28	0.14	-0.17	307.11	-67.25	304.71	-64.86	-
29.84												
1	331	63	0.35	3.14e-02	0.33	4.53e-02	-6.45e-02	412.74	-232.09	410.44	-229.80	
38.43												
1	331	64	0.11	-1.55e-02	0.11	-1.27e-02	1.84e-02	346.52	-10.14	343.31	-6.93	
33.69												
1	331	65	0.25	-2.54e-02	0.25	-2.18e-02	-3.11e-02	378.54	-152.51	353.14	-127.11	
113.33												
1	331	66	0.38	-1.46e-02	0.38	-1.08e-02	3.86e-02	207.36	-8.00	204.04	-4.69	
26.51												
1	331	67	0.51	-8.16e-02	0.47	-4.54e-02	0.14	239.64	-53.36	220.47	-34.19	
72.44												
1	331	68	0.50	-0.12	0.44	-6.68e-02	0.17	263.27	-54.91	256.60	-48.24	
45.60												
1	331	69	0.35	9.16e-02	0.35	9.50e-02	2.96e-02	260.03	35.38	250.65	44.76	
44.93												
1	331	70	0.41	0.12	0.21	0.31	0.14	323.22	75.35	242.18	156.39	
116.28												

Viale Duca Alessandro n. 11 – 43123 Parma
Cell. 335 1403156 – E mail ing.concari@gmail.com
Sito web: studioaire.it – P.IVA 02561480340

1	331	71	0.36	7.79e-02	0.15	0.29	0.12	379.18	0.40	256.02	123.56	177.43
1	331	72	0.11	-1.81e-02	0.10	-1.53e-02	-1.84e-02	298.57	-3.80	298.56	-3.79	1.80
1	331	73	0.24	-2.11e-02	0.23	-1.52e-02	3.91e-02	324.46	-184.77	320.29	-180.60	-45.89
1	331	74	0.33	7.09e-02	0.32	7.85e-02	4.40e-02	419.58	-336.82	407.15	-324.39	96.16
1	331	75	0.41	7.43e-02	0.29	0.19	0.16	398.38	-224.10	292.42	-118.15	233.94
1	331	76	0.38	4.19e-04	0.36	1.80e-02	7.94e-02	95.61	-46.35	49.14	0.12	66.61
1	331	77	0.14	2.76e-02	0.13	3.08e-02	1.82e-02	84.76	-21.13	56.36	7.27	46.91
1	331	78	0.33	9.77e-02	0.33	0.10	2.38e-02	136.06	40.03	64.15	111.94	41.65
1	331	79	0.14	4.71e-02	0.11	7.10e-02	3.93e-02	175.90	29.22	69.08	136.04	65.25
1	331	80	0.23	5.21e-02	6.54e-02	0.21	4.63e-02	291.84	46.26	117.48	220.62	111.44
1	331	81	0.16	8.70e-02	9.31e-02	0.15	2.03e-02	305.66	25.79	95.32	236.14	120.93
1	331	82	0.32	-6.18e-03	5.03e-02	0.26	0.12	323.11	-48.88	102.18	172.06	182.68
1	331	83	0.27	1.60e-02	6.65e-02	0.22	0.10	330.18	-61.97	82.44	185.78	189.14
1	331	84	0.38	9.79e-02	0.21	0.27	0.14	189.55	-270.48	-19.76	-61.17	229.08
1	331	85	0.29	6.36e-02	8.51e-02	0.27	6.61e-02	180.61	-218.20	18.63	-56.22	195.86
1	331	86	0.31	-4.46e-02	0.30	-3.28e-02	6.38e-02	-21.11	-153.07	-32.85	-141.33	-37.57
1	331	87	0.11	-5.82e-02	9.47e-02	-4.64e-02	4.25e-02	7.66	-94.50	7.45	-94.29	4.64
1	331	88	0.49	-0.11	0.49	-0.11	4.17e-03	268.84	-34.71	265.02	-30.88	33.85
1	331	89	0.47	-7.72e-02	0.46	-6.73e-02	7.29e-02	272.72	-34.33	267.76	-29.37	38.72
1	331	90	0.43	-0.23	0.43	-0.23	-2.66e-02	293.10	-40.80	284.89	-32.59	51.71
1	331	91	0.64	-0.26	0.63	-0.24	0.11	288.89	-38.35	282.03	-31.49	46.89
1	331	92	0.45	0.17	0.17	0.44	-3.49e-02	337.49	83.50	293.73	127.26	95.91
1	331	93	0.48	-2.04e-02	-1.23e-03	0.46	9.59e-02	340.44	76.67	290.00	127.11	103.73
1	331	94	0.33	0.14	0.14	0.32	-2.07e-02	382.94	66.11	347.73	101.31	99.58
1	331	95	0.31	0.16	0.17	0.30	4.54e-02	392.96	55.12	347.49	100.59	115.29
1	331	96	0.27	0.16	0.26	0.16	-2.65e-02	453.96	-68.24	438.35	-52.63	88.94
1	331	97	0.26	0.16	0.26	0.16	1.15e-02	460.55	-79.32	438.28	-57.05	107.35
1	331	98	0.23	7.19e-03	0.23	7.40e-03	-6.72e-03	501.09	-110.74	497.20	-106.85	48.66
1	331	99	0.23	8.14e-03	0.23	8.17e-03	-2.54e-03	497.59	-113.45	495.19	-111.05	38.25
1	331	100	0.12	4.23e-02	0.12	4.78e-02	-2.00e-02	21.46	-48.48	18.21	-45.23	14.72
1	331	101	0.34	-6.71e-03	0.30	3.62e-02	-0.11	2.46	-48.03	0.77	-46.34	-9.09
1	331	102	0.11	-7.50e-03	0.11	-5.98e-03	1.31e-02	196.26	35.25	68.28	163.23	65.02
1	331	103	9.35e-02	1.50e-02	6.66e-02	4.19e-02	-3.73e-02	197.11	47.85	89.72	155.24	67.05
1	331	104	0.17	-4.25e-02	7.07e-02	5.70e-02	-0.11	175.78	80.12	82.19	173.72	13.90
1	331	105	0.21	-5.32e-02	5.55e-02	0.11	-0.13	163.65	100.40	102.30	161.75	10.79
1	331	106	0.18	8.89e-03	7.37e-02	0.12	-8.46e-02	51.70	9.53	47.83	13.39	-12.17
1	331	107	0.34	2.11e-02	0.23	0.13	-0.15	60.65	-30.27	29.08	1.30	-43.29
1	331	108	0.11	-5.70e-02	9.22e-02	-4.23e-02	-4.68e-02	90.15	-66.79	58.83	-35.47	62.73
1	331	109	0.30	-3.77e-02	0.29	-2.91e-02	-5.28e-02	94.05	-123.86	42.89	-72.70	92.36
1	331	110	0.14	-8.23e-02	0.12	-6.67e-02	5.66e-02	36.04	5.56	32.44	9.15	9.83
1	331	111	0.22	5.43e-02	0.13	0.15	-8.46e-02	-37.90	-114.11	-40.42	-111.58	13.63
1	331	112	0.10	-6.77e-02	9.79e-02	-6.16e-02	3.20e-02	67.67	24.40	66.09	25.98	8.12
1	331	113	0.14	-8.66e-02	0.12	-7.16e-02	-5.60e-02	76.51	1.36	74.77	3.10	11.29
1	331	114	0.10	-6.93e-02	9.21e-02	-6.07e-02	-3.72e-02	114.11	13.02	111.96	15.17	14.59
1	331	115	0.63	5.15e-02	0.62	5.79e-02	6.04e-02	52.27	-249.12	42.29	-239.13	53.94
1	331	116	0.12	3.15e-02	6.06e-02	9.05e-02	-4.14e-02	98.59	-7.06	92.05	-0.52	25.47
1	331	117	0.54	-1.72e-03	0.54	-1.52e-03	-1.04e-02	245.85	-10.16	244.03	-8.35	21.48
1	331	118	0.54	6.00e-03	0.54	6.89e-03	2.17e-02	248.97	-9.83	247.82	-8.69	17.19
1	331	119	0.11	5.39e-02	7.41e-02	8.81e-02	2.62e-02	43.32	4.55	43.29	4.58	-1.08

Viale Duca Alessandro n. 11 – 43123 Parma
Cell. 335 1403156 – E mail ing.concari@gmail.com
Sito web: studioaire.it – P.IVA 02561480340

1	331	120	0.26	-2.00e-02	-1.33e-02	0.25	4.27e-02	108.14	-341.90	107.12	-340.88		21.40
1	331	121	0.39	5.69e-02	0.34	0.10	0.11	272.92	-42.84	253.79	-23.71		75.33
1	331	122	0.48	0.10	0.45	0.13	9.12e-02	-318.99	-1010.17	-342.10	-987.06		124.24
1	331	123	0.30	5.59e-02	0.30	5.59e-02	-2.64e-03	519.08	-183.93	511.66	-176.51		71.84
1	331	124	0.30	5.30e-02	0.30	5.41e-02	-1.62e-02	517.70	-177.30	511.23	-170.82		66.76
1	331	125	-3.79e-02	-0.12	-0.12	-3.85e-02	6.86e-03	8.74	-17.09	-14.03	5.69	-8.34	
1	331	126	0.12	-1.57e-02	2.87e-02	7.26e-02	6.26e-02	73.03	-7.23	71.01	-5.21		-12.56
1	331	127	9.10e-02	-9.16e-04	9.10e-02	-9.14e-04	4.15e-04	466.08	-22.64	464.32	-20.87		29.29
1	331	128	0.11	-1.02e-02	2.52e-02	7.69e-02	-5.55e-02	136.74	-16.16	128.43	-7.85		34.67
1	331	129	9.29e-02	-1.76e-03	9.29e-02	-1.75e-03	-8.64e-04	468.49	-21.53	468.22	-21.26		11.48
1	331	130	0.50	4.12e-02	0.48	5.98e-02	-9.04e-02	-220.52	-694.03	-220.67	-693.88	8.41	
1	331	131	0.25	-3.84e-02	0.25	-3.83e-02	6.26e-03	78.62	-95.43	6.40	-23.21		85.76
1	331	132	0.64	6.62e-02	0.64	7.21e-02	-5.79e-02	-28.16	-385.28	-32.51	-380.93		39.16
1	332	2	0.23	8.01e-02	0.23	8.13e-02	-1.37e-02	-549.26	-829.83	-549.38	-829.71	5.74	
1	332	6	0.24	0.11	0.23	0.12	1.99e-02	-284.20	-484.91	-294.76	-474.35		44.82
1	332	7	0.38	6.21e-02	0.33	0.11	-0.11	236.58	-65.48	214.90	-43.79		77.97
1	332	8	0.36	3.82e-02	0.36	4.07e-02	-2.82e-02	59.83	-146.68	-34.18	-52.66		102.84
1	332	32	0.30	8.75e-02	0.30	9.14e-02	2.89e-02	-174.70	-334.71	-198.96	-310.45		57.38
1	332	33	0.23	0.15	0.22	0.15	-2.20e-02	-744.65	-1221.84	-786.95	-1179.54		135.64
1	332	39	0.25	7.28e-03	0.20	6.40e-02	0.10	-13.00	-100.49	-35.18	-78.30		38.06
1	332	40	-9.09e-02	-0.33	-9.20e-02	-0.33	1.64e-02	171.85	-24.82	-19.35	166.39		32.33
1	332	41	-6.61e-02	-0.22	-6.68e-02	-0.22	-1.02e-02	184.00	-19.66	-19.54	183.88	4.94	
1	332	42	0.22	8.29e-02	0.15	0.15	-6.69e-02	-46.18	-99.12	-55.30	-90.00		20.00
1	332	43	0.22	-7.72e-02	-2.00e-02	0.17	-0.12	144.29	-515.85	144.23	-515.79	-5.88	
1	332	44	0.21	2.42e-02	9.66e-02	0.14	9.11e-02	-59.54	-178.99	-59.64	-178.88	-3.56	
1	332	45	-3.16e-02	-9.22e-02	-9.13e-02	-3.25e-02	7.19e-03	16.00	-41.07	-29.79	4.71		22.73
1	332	46	-4.29e-02	-0.12	-0.12	-4.35e-02	-7.03e-03	6.41	-18.78	-14.13	1.76	9.77	
1	332	47	0.23	6.23e-02	0.14	0.15	8.24e-02	-21.18	-51.42	-39.20	-33.40		14.84
1	332	48	0.20	-2.39e-02	-2.21e-02	0.20	1.95e-02	95.62	-177.18	92.73	-174.29		27.91
1	332	49	0.28	6.41e-02	0.15	0.20	-0.10	97.66	-49.51	-42.09	90.24		32.20
1	332	50	-4.65e-02	-7.31e-02	-7.03e-02	-4.94e-02	-8.24e-03	273.51	-31.08	-20.23	262.66		56.45
1	332	51	3.89e-02	-7.11e-02	-7.11e-02	3.88e-02	-2.07e-03	231.16	-57.20	-22.25	196.21		94.11
1	332	52	0.38	0.16	0.19	0.36	6.70e-02	-47.61	-225.74	-71.93	-201.42		61.16
1	332	53	0.35	-0.13	-2.92e-02	0.24	0.20	211.08	-793.46	205.10	-787.49		77.24
1	332	54	0.23	1.46e-02	8.96e-02	0.15	-0.10	-70.38	-319.32	-76.70	-313.00		39.16
1	332	55	-3.36e-02	-9.21e-02	-9.00e-02	-3.56e-02	-1.09e-02	20.83	-50.84	-36.74	6.73		-28.49
1	332	56	0.43	-5.52e-03	0.43	-2.37e-03	-3.69e-02	161.54	-2.26	161.09	-1.81	8.60	
1	332	57	0.51	-0.13	0.46	-7.07e-02	-0.18	181.38	-62.51	181.21	-62.34	-6.43	
1	332	58	0.43	-9.65e-02	0.40	-6.50e-02	-0.12	229.30	-122.70	221.79	-115.19		50.87
1	332	59	0.36	2.88e-02	0.30	8.88e-02	0.13	268.41	-73.02	229.37	-33.98		108.65
1	332	60	0.35	0.11	0.22	0.24	-0.12	259.45	70.80	217.01	113.25		78.77
1	332	61	0.38	3.02e-02	0.16	0.25	-0.17	261.17	112.18	253.59	119.76		32.74
1	332	62	0.40	2.44e-02	0.28	0.14	-0.17	307.11	-67.25	304.71	-64.86		-29.84
1	332	63	0.35	3.14e-02	0.33	4.53e-02	-6.45e-02	412.74	-232.09	410.44	-229.80		38.43
1	332	64	0.11	-1.55e-02	0.11	-1.27e-02	1.84e-02	346.52	-10.14	343.31	-6.93		33.69
1	332	65	0.25	-2.54e-02	0.25	-2.18e-02	-3.11e-02	378.54	-152.51	353.14	-127.11		113.33
1	332	66	0.38	-1.46e-02	0.38	-1.08e-02	3.86e-02	207.36	-8.00	204.04	-4.69		26.51
1	332	67	0.51	-8.16e-02	0.47	-4.54e-02	0.14	239.64	-53.36	220.47	-34.19		72.44
1	332	68	0.50	-0.12	0.44	-6.68e-02	0.17	263.27	-54.91	256.60	-48.24		45.60
1	332	69	0.35	9.16e-02	0.35	9.50e-02	2.96e-02	260.03	35.38	250.65	44.76		44.93
1	332	70	0.41	0.12	0.21	0.31	0.14	323.22	75.35	242.18	156.39		

Viale Duca Alessandro n. 11 – 43123 Parma
Cell. 335 1403156 – E mail ing.concari@gmail.com
Sito web: studioaire.it – P.IVA 02561480340

116.28												
1	332	71	0.36	7.79e-02	0.15	0.29	0.12	379.18	0.40	256.02	123.56	
177.43												
1	332	72	0.11	-1.81e-02	0.10	-1.53e-02	-1.84e-02	298.57	-3.80	298.56	-3.79	1.80
1	332	73	0.24	-2.11e-02	0.23	-1.52e-02	3.91e-02	324.46	-184.77	320.29	-180.60	-
45.89												
1	332	74	0.33	7.09e-02	0.32	7.85e-02	4.40e-02	419.58	-336.82	407.15	-324.39	
96.16												
1	332	75	0.41	7.43e-02	0.29	0.19	0.16	398.38	-224.10	292.42	-118.15	
233.94												
1	332	76	0.38	4.19e-04	0.36	1.80e-02	7.94e-02	95.61	-46.35	49.14	0.12	
66.61												
1	332	77	0.14	2.76e-02	0.13	3.08e-02	1.82e-02	84.76	-21.13	56.36	7.27	
46.91												
1	332	78	0.33	9.77e-02	0.33	0.10	2.38e-02	136.06	40.03	64.15	111.94	
41.65												
1	332	79	0.14	4.71e-02	0.11	7.10e-02	3.93e-02	175.90	29.22	69.08	136.04	
65.25												
1	332	80	0.23	5.21e-02	6.54e-02	0.21	4.63e-02	291.84	46.26	117.48	220.62	
111.44												
1	332	81	0.16	8.70e-02	9.31e-02	0.15	2.03e-02	305.66	25.79	95.32	236.14	
120.93												
1	332	82	0.32	-6.18e-03	5.03e-02	0.26	0.12	323.11	-48.88	102.18	172.06	
182.68												
1	332	83	0.27	1.60e-02	6.65e-02	0.22	0.10	330.18	-61.97	82.44	185.78	
189.14												
1	332	84	0.38	9.79e-02	0.21	0.27	0.14	189.55	-270.48	-19.76	-61.17	
229.08												
1	332	85	0.29	6.36e-02	8.51e-02	0.27	6.61e-02	180.61	-218.20	18.63	-56.22	
195.86												
1	332	86	0.31	-4.46e-02	0.30	-3.28e-02	6.38e-02	-21.11	-153.07	-32.85	-141.33	-
37.57												
1	332	87	0.11	-5.82e-02	9.47e-02	-4.64e-02	4.25e-02	7.66	-94.50	7.45	-94.29	4.64
1	332	88	0.49	-0.11	0.49	-0.11	4.17e-03	268.84	-34.71	265.02	-30.88	
33.85												
1	332	89	0.47	-7.72e-02	0.46	-6.73e-02	7.29e-02	272.72	-34.33	267.76	-29.37	
38.72												
1	332	90	0.43	-0.23	0.43	-0.23	-2.66e-02	293.10	-40.80	284.89	-32.59	
51.71												
1	332	91	0.64	-0.26	0.63	-0.24	0.11	288.89	-38.35	282.03	-31.49	
46.89												
1	332	92	0.45	0.17	0.17	0.44	-3.49e-02	337.49	83.50	293.73	127.26	
95.91												
1	332	93	0.48	-2.04e-02	-1.23e-03	0.46	9.59e-02	340.44	76.67	290.00	127.11	
103.73												
1	332	94	0.33	0.14	0.14	0.32	-2.07e-02	382.94	66.11	347.73	101.31	
99.58												
1	332	95	0.31	0.16	0.17	0.30	4.54e-02	392.96	55.12	347.49	100.59	
115.29												
1	332	96	0.27	0.16	0.26	0.16	-2.65e-02	453.96	-68.24	438.35	-52.63	
88.94												
1	332	97	0.26	0.16	0.26	0.16	1.15e-02	460.55	-79.32	438.28	-57.05	
107.35												
1	332	98	0.23	7.19e-03	0.23	7.40e-03	-6.72e-03	501.09	-110.74	497.20	-106.85	
48.66												
1	332	99	0.23	8.14e-03	0.23	8.17e-03	-2.54e-03	497.59	-113.45	495.19	-111.05	
38.25												
1	332	100	0.12	4.23e-02	0.12	4.78e-02	-2.00e-02	21.46	-48.48	18.21	-45.23	
14.72												
1	332	101	0.34	-6.71e-03	0.30	3.62e-02	-0.11	2.46	-48.03	0.77	-46.34	-9.09
1	332	102	0.11	-7.50e-03	0.11	-5.98e-03	1.31e-02	196.26	35.25	68.28	163.23	
65.02												
1	332	103	9.35e-02	1.50e-02	6.66e-02	4.19e-02	-3.73e-02	197.11	47.85	89.72	155.24	
67.05												
1	332	104	0.17	-4.25e-02	7.07e-02	5.70e-02	-0.11	175.78	80.12	82.19	173.72	
13.90												
1	332	105	0.21	-5.32e-02	5.55e-02	0.11	-0.13	163.65	100.40	102.30	161.75	
10.79												
1	332	106	0.18	8.89e-03	7.37e-02	0.12	-8.46e-02	51.70	9.53	47.83	13.39	-
12.17												
1	332	107	0.34	2.11e-02	0.23	0.13	-0.15	60.65	-30.27	29.08	1.30	-
43.29												
1	332	108	0.11	-5.70e-02	9.22e-02	-4.23e-02	-4.68e-02	90.15	-66.79	58.83	-35.47	
62.73												
1	332	109	0.30	-3.77e-02	0.29	-2.91e-02	-5.28e-02	94.05	-123.86	42.89	-72.70	
92.36												
1	332	110	0.14	-8.23e-02	0.12	-6.67e-02	5.66e-02	36.04	5.56	32.44	9.15	9.83
1	332	111	0.22	5.43e-02	0.13	0.15	-8.46e-02	-37.90	-114.11	-40.42	-111.58	
13.63												
1	332	112	0.10	-6.77e-02	9.79e-02	-6.16e-02	3.20e-02	67.67	24.40	66.09	25.98	8.12
1	332	113	0.14	-8.66e-02	0.12	-7.16e-02	-5.60e-02	76.51	1.36	74.77	3.10	
11.29												
1	332	114	0.10	-6.93e-02	9.21e-02	-6.07e-02	-3.72e-02	114.11	13.02	111.96	15.17	
14.59												
1	332	115	0.63	5.15e-02	0.62	5.79e-02	6.04e-02	52.27	-249.12	42.29	-239.13	
53.94												
1	332	116	0.12	3.15e-02	6.06e-02	9.05e-02	-4.14e-02	98.59	-7.06	92.05	-0.52	
25.47												
1	332	117	0.54	-1.72e-03	0.54	-1.52e-03	-1.04e-02	245.85	-10.16	244.03	-8.35	
21.48												
1	332	118	0.54	6.00e-03	0.54	6.89e-03	2.17e-02	248.97	-9.83	247.82	-8.69	
17.19												

Viale Duca Alessandro n. 11 – 43123 Parma
Cell. 335 1403156 – E mail ing.concari@gmail.com
Sito web: studioaire.it – P.IVA 02561480340

1	332	119	0.11	5.39e-02	7.41e-02	8.81e-02	2.62e-02	43.32	4.55	43.29	4.58	-1.08
1	332	120	0.26	-2.00e-02	-1.33e-02	0.25	4.27e-02	108.14	-341.90	107.12	-340.88	
21.40												
1	332	121	0.39	5.69e-02	0.34	0.10	0.11	272.92	-42.84	253.79	-23.71	
75.33												
1	332	122	0.48	0.10	0.45	0.13	9.12e-02	-318.99	-1010.17	-342.10	-987.06	
124.24												
1	332	123	0.30	5.59e-02	0.30	5.59e-02	-2.64e-03	519.08	-183.93	511.66	-176.51	
71.84												
1	332	124	0.30	5.30e-02	0.30	5.41e-02	-1.62e-02	517.70	-177.30	511.23	-170.82	
66.76												
1	332	125	-3.79e-02	-0.12	-0.12	-3.85e-02	6.86e-03	8.74	-17.09	-14.03	5.69	-8.34
1	332	126	0.12	-1.57e-02	2.87e-02	7.26e-02	6.26e-02	73.03	-7.23	71.01	-5.21	-
12.56												
1	332	127	9.10e-02	-9.16e-04	9.10e-02	-9.14e-04	4.15e-04	466.08	-22.64	464.32	-20.87	
29.29												
1	332	128	0.11	-1.02e-02	2.52e-02	7.69e-02	-5.55e-02	136.74	-16.16	128.43	-7.85	
34.67												
1	332	129	9.29e-02	-1.76e-03	9.29e-02	-1.75e-03	-8.64e-04	468.49	-21.53	468.22	-21.26	
11.48												
1	332	130	0.50	4.12e-02	0.48	5.98e-02	-9.04e-02	-220.52	-694.03	-220.67	-693.88	8.41
1	332	131	0.25	-3.84e-02	0.25	-3.83e-02	6.26e-03	78.62	-95.43	6.40	-23.21	
85.76												
1	332	132	0.64	6.62e-02	0.64	7.21e-02	-5.79e-02	-28.16	-385.28	-32.51	-380.93	
39.16												
M_G			**N max**	**N min**	**N 1**	**N 2**	**N 1-2**	**M max**	**M min**	**M 1**	**M 2**	**M 1-**
2												
				-6.45	-6.40	-5.96	-3.04		-2441.70	-2213.38	-2294.47	-
253.10												
			7.59		7.51	4.12	2.13	2161.81		2129.09	775.38	
692.47												

MODELLO 1 VANO ASCENSORE

Macro	Tipo	Angolo 1-Z (gradi)
1	**Setto**	**0.0**

M_S	Cmb	Z	N memb.	V memb.	V orto	M memb.	M orto	T
		cm	daN	daN	daN	daN m	daN m	daN m
1	20	0.0	-1.291e+04	-115.83	-807.89	-897.05	333.24	5.30
1	20	47.14	-1.065e+04	-300.57	-50.33	-682.12	0.20	-43.10
1	20	47.14	-1.065e+04	-300.57	-50.33	-682.12	0.20	-43.10
1	20	94.29	-8934.69	-392.45	29.67	-989.49	-17.21	-37.93
1	20	94.29	-8934.69	-392.45	29.67	-989.49	-17.21	-37.93
1	20	141.43	-7756.11	-435.66	29.67	-1462.93	-4.58	-19.59
1	20	141.43	-7756.11	-435.66	29.67	-1462.93	-4.58	-19.59
1	20	188.57	-6242.24	-474.46	183.38	-2127.20	6.79	8.52
1	20	188.57	-6242.24	-474.46	183.38	-2127.20	6.79	8.52
1	20	235.71	-5818.76	-1400.94	221.34	-3149.53	128.03	154.37
1	20	235.71	-5818.76	-1400.94	221.34	-3149.53	128.03	154.37
1	20	282.86	-3476.06	-1264.40	-46.66	-824.94	98.28	101.78
1	20	330.00	-2996.63	-1927.64	-273.04	51.26	1.54	69.19
1	26	0.0	-1.158e+04	-164.02	-713.63	-1102.47	286.12	6.40
1	26	47.14	-9491.45	-374.58	-38.69	-835.96	-4.70	-46.47
1	26	47.14	-9491.45	-374.58	-38.69	-835.96	-4.70	-46.47
1	26	94.29	-7887.06	-472.94	28.58	-1191.49	-17.22	-42.58
1	26	94.29	-7887.06	-472.94	28.58	-1191.49	-17.22	-42.58
1	26	141.43	-6768.12	-522.10	28.58	-1738.22	-4.86	-24.02
1	26	141.43	-6768.12	-522.10	28.58	-1738.22	-4.86	-24.02
1	26	188.57	-5266.91	-568.22	176.13	-2508.06	6.32	7.61
1	26	188.57	-5266.91	-568.22	176.13	-2508.06	6.32	7.61
1	26	235.71	-4724.85	-1691.61	203.59	-3662.53	119.50	149.37
1	26	235.71	-4724.85	-1691.61	203.59	-3662.53	119.50	149.37
1	26	282.86	-2616.91	-1536.32	-70.37	-1205.40	78.97	97.20
1	26	330.00	-2129.01	-2563.96	-245.25	-151.68	-5.56	87.57
1	27	0.0	-1.190e+04	-98.57	-651.57	-1247.94	257.06	3.89
1	27	47.14	-9938.88	-315.16	-31.79	-1034.91	-7.37	-44.34
1	27	47.14	-9938.88	-315.16	-31.79	-1034.91	-7.37	-44.34
1	27	94.29	-8396.06	-406.46	28.12	-1356.84	-16.82	-40.03
1	27	94.29	-8396.06	-406.46	28.12	-1356.84	-16.82	-40.03
1	27	141.43	-7314.40	-451.12	28.12	-1857.12	-4.38	-21.04
1	27	141.43	-7314.40	-451.12	28.12	-1857.12	-4.38	-21.04
1	27	188.57	-5853.93	-496.50	195.59	-2562.13	5.72	8.86
1	27	188.57	-5853.93	-496.50	195.59	-2562.13	5.72	8.86
1	27	235.71	-5455.42	-1346.01	224.36	-3731.46	133.62	162.54
1	27	235.71	-5455.42	-1346.01	224.36	-3731.46	133.62	162.54
1	27	282.86	-2952.29	-1305.53	-93.21	-1359.77	76.64	128.62
1	27	330.00	-2391.66	-2431.57	-252.70	-443.68	-9.65	120.01
1	29	0.0	-8604.59	-134.86	-462.46	-1134.40	175.16	4.50
1	29	47.14	-7160.99	-333.77	-17.48	-913.35	-9.43	-40.21
1	29	47.14	-7160.99	-333.77	-17.48	-913.35	-9.43	-40.21
1	29	94.29	-6016.61	-416.24	22.07	-1227.45	-13.60	-37.70
1	29	94.29	-6016.61	-416.24	22.07	-1227.45	-13.60	-37.70
1	29	141.43	-5201.07	-458.73	22.07	-1710.72	-3.67	-21.56
1	29	141.43	-5201.07	-458.73	22.07	-1710.72	-3.67	-21.56
1	29	188.57	-4068.72	-503.11	154.74	-2391.83	4.33	6.99

Viale Duca Alessandro n. 11 – 43123 Parma
Cell. 335 1403156 – E mail ing.concari@gmail.com
Sito web: studioaire.it – P.IVA 02561480340

1	29	188.57	-4068.72	-503.11	154.74	-2391.83	4.33	6.99
1	29	235.71	-3686.52	-1422.23	171.36	-3464.48	103.07	131.84
1	29	235.71	-3686.52	-1422.23	171.36	-3464.48	103.07	131.84
1	29	282.86	-1854.98	-1336.29	-88.50	-1364.33	51.58	97.62
1	29	330.00	-1420.32	-2377.62	-193.59	-459.25	-12.60	104.90
1	65	0.0	-4343.76	-159.24	805.16	-1857.69	-86.09	-10.08
1	65	47.14	-4655.63	-400.20	-9.90	-1779.24	29.42	-23.85
1	65	47.14	-4655.63	-400.20	-9.90	-1779.24	29.42	-23.85
1	65	94.29	-4561.99	-384.13	-40.93	-2270.81	3.64	-28.07
1	65	94.29	-4561.99	-384.13	-40.93	-2270.81	3.64	-28.07
1	65	141.43	-3850.42	-403.82	-40.93	-2472.29	9.88	-12.79
1	65	141.43	-3850.42	-403.82	-40.93	-2472.29	9.88	-12.79
1	65	188.57	-4224.04	-452.70	339.23	-3561.13	49.55	9.33
1	65	188.57	-4224.04	-452.70	339.23	-3561.13	49.55	9.33
1	65	235.71	-4291.22	-848.79	397.76	-4017.46	164.75	180.32
1	65	235.71	-4291.22	-848.79	397.76	-4017.46	164.75	180.32
1	65	282.86	-2013.26	-523.32	-453.92	-2646.67	97.66	214.78
1	65	330.00	-501.84	-1965.07	-161.76	-2167.46	-58.16	308.06
1	75	0.0	-1.433e+04	-293.67	-2001.45	722.34	535.21	1.46
1	75	47.14	-1.074e+04	-326.57	-37.20	782.92	-41.36	-34.81
1	75	47.14	-1.074e+04	-326.57	-37.20	782.92	-41.36	-34.81
1	75	94.29	-7917.48	-403.90	91.73	474.85	-28.81	-26.83
1	75	94.29	-7917.48	-403.90	91.73	474.85	-28.81	-26.83
1	75	141.43	-7205.91	-423.59	91.73	273.37	-19.76	-14.61
1	75	141.43	-7205.91	-423.59	91.73	273.37	-19.76	-14.61
1	75	188.57	-4104.60	-438.88	-92.62	4.31	-30.43	37.61
1	75	188.57	-4104.60	-438.88	-92.62	4.31	-30.43	37.61
1	75	235.71	-3398.82	-2230.11	-103.73	-452.02	14.36	65.84
1	75	235.71	-3398.82	-2230.11	-103.73	-452.02	14.36	65.84
1	75	282.86	-2500.53	-995.28	421.63	988.26	59.01	-40.21
1	75	330.00	-3037.57	-1205.36	-247.53	1843.48	60.37	-178.43
1	93	0.0	-9548.90	-725.91	-172.13	-1349.78	118.84	-27.94
1	93	47.14	-8392.55	-1024.78	1.74	-1527.83	-2.52	-48.47
1	93	47.14	-8392.55	-1024.78	1.74	-1527.83	-2.52	-48.47
1	93	94.29	-6790.37	-1017.80	0.48	-2653.36	-10.21	-55.00
1	93	94.29	-6790.37	-1017.80	0.48	-2653.36	-10.21	-55.00
1	93	141.43	-6078.80	-1037.48	0.48	-2854.84	-3.28	-32.37
1	93	141.43	-6078.80	-1037.48	0.48	-2854.84	-3.28	-32.37
1	93	188.57	-5003.13	-1181.40	294.89	-4886.04	44.65	54.71
1	93	188.57	-5003.13	-1181.40	294.89	-4886.04	44.65	54.71
1	93	235.71	-4612.15	-3674.83	330.01	-5342.36	161.78	204.09
1	93	235.71	-4612.15	-3674.83	330.01	-5342.36	161.78	204.09
1	93	282.86	-2387.31	-1307.07	-224.42	-3226.18	126.20	198.97
1	93	330.00	-1211.52	-4149.76	-303.75	-1711.13	-19.87	210.92
1	97	0.0	-5973.54	-116.70	279.33	-1237.21	33.75	-4.80
1	97	47.14	-5583.30	-289.72	-19.48	-1148.18	18.46	-23.12
1	97	47.14	-5583.30	-289.72	-19.48	-1148.18	18.46	-23.12
1	97	94.29	-5084.80	-298.32	-17.39	-1505.87	-1.75	-24.18
1	97	94.29	-5084.80	-298.32	-17.39	-1505.87	-1.75	-24.18
1	97	141.43	-4373.22	-318.01	-17.39	-1707.34	5.09	-11.04
1	97	141.43	-4373.22	-318.01	-17.39	-1707.34	5.09	-11.04
1	97	188.57	-4202.74	-355.25	248.45	-2475.07	31.82	7.71
1	97	188.57	-4202.74	-355.25	248.45	-2475.07	31.82	7.71
1	97	235.71	-4161.57	-739.41	294.81	-2931.39	131.68	142.91
1	97	235.71	-4161.57	-739.41	294.81	-2931.39	131.68	142.91
1	97	282.86	-2200.83	-509.86	-278.11	-1641.61	86.92	151.50
1	97	330.00	-1143.86	-1413.37	-168.32	-1222.33	-33.42	193.97
1	107	0.0	-1.198e+04	-192.09	-1409.25	298.03	407.17	2.23
1	107	47.14	-9243.74	-239.87	-35.12	382.00	-24.61	-29.55
1	107	47.14	-9243.74	-239.87	-35.12	382.00	-24.61	-29.55
1	107	94.29	-7090.64	-301.71	62.86	149.27	-21.45	-23.26
1	107	94.29	-7090.64	-301.71	62.86	149.27	-21.45	-23.26
1	107	141.43	-6379.07	-321.40	62.86	-52.21	-12.95	-11.99
1	107	141.43	-6379.07	-321.40	62.86	-52.21	-12.95	-11.99
1	107	188.57	-4112.27	-330.14	-15.49	-308.50	-17.40	24.38
1	107	188.57	-4112.27	-330.14	-15.49	-308.50	-17.40	24.38
1	107	235.71	-3574.16	-1581.28	-11.10	-764.82	37.18	74.29
1	107	235.71	-3574.16	-1581.28	-11.10	-764.82	37.18	74.29
1	107	282.86	-2481.65	-813.42	254.32	560.02	61.62	-1.96
1	107	330.00	-2695.00	-941.75	-216.81	1207.45	38.69	-98.70
1	125	0.0	-9102.16	-463.19	-304.50	-924.14	156.16	-15.36
1	125	47.14	-7829.29	-667.95	-12.40	-982.13	-0.78	-37.92
1	125	47.14	-7829.29	-667.95	-12.40	-982.13	-0.78	-37.92
1	125	94.29	-6397.08	-680.30	7.05	-1724.83	-10.09	-40.28
1	125	94.29	-6397.08	-680.30	7.05	-1724.83	-10.09	-40.28
1	125	141.43	-5685.51	-699.98	7.05	-1926.31	-2.85	-22.79
1	125	141.43	-5685.51	-699.98	7.05	-1926.31	-2.85	-22.79
1	125	188.57	-4665.72	-790.57	221.18	-3243.60	28.65	34.80
1	125	188.57	-4665.72	-790.57	221.18	-3243.60	28.65	34.80
1	125	235.71	-4337.27	-2420.69	253.39	-3699.92	129.58	156.49
1	125	235.71	-4337.27	-2420.69	253.39	-3699.92	129.58	156.49
1	125	282.86	-2421.03	-974.52	-135.62	-1969.35	104.81	141.56
1	125	330.00	-1565.10	-2709.25	-256.65	-944.02	-10.41	134.97
1	140	0.0	-9550.66	-78.08	-589.12	-642.05	242.85	3.78
1	140	47.14	-7891.63	-208.92	-36.39	-489.25	-0.06	-30.97
1	140	47.14	-7891.63	-208.92	-36.39	-489.25	-0.06	-30.97
1	140	94.29	-6629.10	-274.44	21.78	-704.44	-12.58	-27.13
1	140	94.29	-6629.10	-274.44	21.78	-704.44	-12.58	-27.13
1	140	141.43	-5767.10	-305.08	21.78	-1037.88	-3.29	-13.83
1	140	141.43	-5767.10	-305.08	21.78	-1037.88	-3.29	-13.83
1	140	188.57	-4639.44	-332.72	135.18	-1506.49	4.95	6.26
1	140	188.57	-4639.44	-332.72	135.18	-1506.49	4.95	6.26
1	140	235.71	-4333.91	-978.14	163.49	-2236.07	94.56	112.52
1	140	235.71	-4333.91	-978.14	163.49	-2236.07	94.56	112.52
1	140	282.86	-2595.72	-883.94	-33.80	-568.75	72.68	75.51
1	140	330.00	-2229.70	-1338.04	-201.33	44.32	1.19	50.14
1	141	0.0	-8098.13	-92.05	-434.63	-866.32	168.48	3.61
1	141	47.14	-6754.07	-243.86	-18.75	-695.15	-6.76	-32.39

Viale Duca Alessandro n. 11 – 43123 Parma
Cell. 335 1403156 – E mail ing.concari@gmail.com
Sito web: studioaire.it – P.IVA 02561480340

1	141	47.14	-6754.07	-243.86	-18.75	-695.15	-6.76	-32.39
1	141	94.29	-5692.68	-309.52	19.72	-930.26	-11.85	-29.74
1	141	94.29	-5692.68	-309.52	19.72	-930.26	-11.85	-29.74
1	141	141.43	-4958.28	-342.40	19.72	-1296.95	-3.03	-16.28
1	141	141.43	-4958.28	-342.40	19.72	-1296.95	-3.03	-16.28
1	141	188.57	-3907.34	-376.43	135.48	-1815.44	3.94	6.12
1	141	188.57	-3907.34	-376.43	135.48	-1815.44	3.94	6.12
1	141	235.71	-3594.52	-1058.61	154.07	-2650.60	91.74	111.90
1	141	235.71	-3594.52	-1058.61	154.07	-2650.60	91.74	111.90
1	141	282.86	-1932.53	-993.39	-65.73	-956.53	52.28	84.23
1	141	330.00	-1526.74	-1717.43	-177.32	-280.80	-7.99	79.96
1	142	0.0	-8662.88	-110.21	-526.28	-779.00	211.43	4.51
1	142	47.14	-7119.66	-258.26	-28.63	-591.81	-3.32	-33.21
1	142	47.14	-7119.66	-258.26	-28.63	-591.81	-3.32	-33.21
1	142	94.29	-5930.68	-328.11	21.06	-839.11	-12.59	-30.23
1	142	94.29	-5930.68	-328.11	21.06	-839.11	-12.59	-30.23
1	142	141.43	-5108.44	-362.70	21.06	-1221.40	-3.48	-16.78
1	142	141.43	-5108.44	-362.70	21.06	-1221.40	-3.48	-16.78
1	142	188.57	-3989.22	-395.22	130.34	-1760.40	4.63	5.66
1	142	188.57	-3989.22	-395.22	130.34	-1760.40	4.63	5.66
1	142	235.71	-3604.63	-1171.92	151.66	-2578.06	88.88	109.18
1	142	235.71	-3604.63	-1171.92	151.66	-2578.06	88.88	109.18
1	142	282.86	-2022.96	-1065.22	-49.61	-822.39	59.80	72.46
1	142	330.00	-1651.28	-1762.24	-182.80	-90.98	-3.54	62.39
1	143	0.0	-8877.26	-66.57	-484.91	-875.98	192.06	2.84
1	143	47.14	-7417.95	-218.65	-24.03	-724.44	-5.11	-31.79
1	143	47.14	-7417.95	-218.65	-24.03	-724.44	-5.11	-31.79
1	143	94.29	-6270.01	-283.78	20.75	-949.34	-12.33	-28.53
1	143	94.29	-6270.01	-283.78	20.75	-949.34	-12.33	-28.53
1	143	141.43	-5472.62	-315.38	20.75	-1300.67	-3.16	-14.79
1	143	141.43	-5472.62	-315.38	20.75	-1300.67	-3.16	-14.79
1	143	188.57	-4380.56	-347.41	143.32	-1796.44	4.23	6.49
1	143	188.57	-4380.56	-347.41	143.32	-1796.44	4.23	6.49
1	143	235.71	-4091.68	-941.52	165.50	-2624.02	98.29	117.96
1	143	235.71	-4091.68	-941.52	165.50	-2624.02	98.29	117.96
1	143	282.86	-2246.55	-911.37	-64.83	-925.30	58.25	93.41
1	143	330.00	-1826.38	-1673.99	-187.77	-285.64	-6.27	84.02
1	171	0.0	-7430.46	-54.10	-400.64	-487.92	160.25	3.05
1	171	47.14	-6221.25	-146.49	-20.15	-369.95	-3.48	-23.73
1	171	47.14	-6221.25	-146.49	-20.15	-369.95	-3.48	-23.73
1	171	94.29	-5279.71	-193.08	16.86	-514.90	-9.60	-20.97
1	171	94.29	-5279.71	-193.08	16.86	-514.90	-9.60	-20.97
1	171	141.43	-4663.49	-215.00	16.86	-747.68	-2.13	-10.54
1	171	141.43	-4663.49	-215.00	16.86	-747.68	-2.13	-10.54
1	171	188.57	-3731.06	-237.41	111.83	-1079.07	3.48	5.34
1	171	188.57	-3731.06	-237.41	111.83	-1079.07	3.48	5.34
1	171	235.71	-3520.78	-686.51	133.81	-1623.67	77.89	88.42
1	171	235.71	-3520.78	-686.51	133.81	-1623.67	77.89	88.42
1	171	282.86	-2105.90	-611.46	-32.23	-397.01	56.39	63.31
1	171	330.00	-1748.73	-792.79	-164.45	4.28	-1.73	41.58
1	172	0.0	-7882.27	-68.62	-473.96	-418.07	194.60	3.77
1	172	47.14	-6513.72	-158.00	-28.06	-287.28	-0.73	-24.39
1	172	47.14	-6513.72	-158.00	-28.06	-287.28	-0.73	-24.39
1	172	94.29	-5470.11	-207.95	17.93	-441.98	-10.20	-21.36
1	172	94.29	-5470.11	-207.95	17.93	-441.98	-10.20	-21.36
1	172	141.43	-4783.62	-231.24	17.93	-687.24	-2.48	-10.93
1	172	141.43	-4783.62	-231.24	17.93	-687.24	-2.48	-10.93
1	172	188.57	-3796.56	-252.45	107.72	-1035.04	4.03	4.97
1	172	188.57	-3796.56	-252.45	107.72	-1035.04	4.03	4.97
1	172	235.71	-3528.87	-777.16	131.88	-1565.64	75.60	86.25
1	172	235.71	-3528.87	-777.16	131.88	-1565.64	75.60	86.25
1	172	282.86	-2178.24	-668.93	-19.33	-289.70	62.41	53.90
1	172	330.00	-1848.36	-828.64	-168.84	156.14	1.82	27.52
1	173	0.0	-8098.29	-32.26	-443.74	-496.20	180.46	2.39
1	173	47.14	-6790.29	-124.88	-24.68	-395.06	-2.06	-23.22
1	173	47.14	-6790.29	-124.88	-24.68	-395.06	-2.06	-23.22
1	173	94.29	-5774.57	-171.02	17.74	-531.25	-10.01	-19.94
1	173	94.29	-5774.57	-171.02	17.74	-531.25	-10.01	-19.94
1	173	141.43	-5104.36	-191.84	17.74	-750.86	-2.23	-9.25
1	173	141.43	-5104.36	-191.84	17.74	-750.86	-2.23	-9.25
1	173	188.57	-4136.68	-212.55	118.55	-1062.79	3.73	5.66
1	173	188.57	-4136.68	-212.55	118.55	-1062.79	3.73	5.66
1	173	235.71	-3946.92	-586.15	143.61	-1600.89	83.50	93.62
1	173	235.71	-3946.92	-586.15	143.61	-1600.89	83.50	93.62
1	173	282.86	-2375.05	-541.16	-31.46	-370.25	61.51	71.18
1	173	330.00	-2005.57	-755.55	-173.41	0.13	-0.26	45.05
1	174	0.0	-8550.10	-46.78	-517.06	-426.35	214.81	3.11
1	174	47.14	-7082.76	-136.39	-32.58	-312.38	0.69	-23.88
1	174	47.14	-7082.76	-136.39	-32.58	-312.38	0.69	-23.88
1	174	94.29	-5964.97	-185.89	18.81	-458.33	-10.61	-20.32
1	174	94.29	-5964.97	-185.89	18.81	-458.33	-10.61	-20.32
1	174	141.43	-5224.48	-208.08	18.81	-690.43	-2.59	-9.65
1	174	141.43	-5224.48	-208.08	18.81	-690.43	-2.59	-9.65
1	174	188.57	-4202.17	-227.58	114.44	-1018.75	4.29	5.29
1	174	188.57	-4202.17	-227.58	114.44	-1018.75	4.29	5.29
1	174	235.71	-3955.02	-676.79	141.68	-1542.86	81.21	91.45
1	174	235.71	-3955.02	-676.79	141.68	-1542.86	81.21	91.45
1	174	282.86	-2447.39	-598.62	-18.56	-262.93	67.53	61.77
1	174	330.00	-2105.20	-791.40	-177.80	151.99	3.30	31.00
1	179	0.0	-7085.20	-6.42	-378.99	-330.16	155.14	1.85
1	179	47.14	-5940.23	-64.04	-21.30	-258.76	-1.44	-16.74
1	179	47.14	-5940.23	-64.04	-21.30	-258.76	-1.44	-16.74
1	179	94.29	-5044.81	-96.09	15.01	-335.88	-8.34	-13.82
1	179	94.29	-5044.81	-96.09	15.01	-335.88	-8.34	-13.82
1	179	141.43	-4472.70	-109.75	15.01	-469.41	-1.76	-5.73
1	179	141.43	-4472.70	-109.75	15.01	-469.41	-1.76	-5.73
1	179	188.57	-3584.58	-123.06	96.95	-662.65	3.15	4.38
1	179	188.57	-3584.58	-123.06	96.95	-662.65	3.15	4.38

Viale Duca Alessandro n. 11 – 43123 Parma
Cell. 335 1403156 – E mail ing.concari@gmail.com
Sito web: studioaire.it – P.IVA 02561480340

1	179	235.71	-3410.50	-331.38	119.49	-1022.86	69.08	72.03
1	179	235.71	-3410.50	-331.38	119.49	-1022.86	69.08	72.03
1	179	282.86	-2087.65	-307.57	-20.20	-140.93	53.67	57.44
1	179	330.00	-1739.57	-397.06	-144.76	76.09	1.23	30.10
1	180	0.0	-7537.01	-20.94	-452.31	-260.31	189.50	2.57
1	180	47.14	-6232.70	-75.56	-29.20	-176.08	1.32	-17.40
1	180	47.14	-6232.70	-75.56	-29.20	-176.08	1.32	-17.40
1	180	94.29	-5235.22	-110.96	16.08	-262.97	-8.94	-14.21
1	180	94.29	-5235.22	-110.96	16.08	-262.97	-8.94	-14.21
1	180	141.43	-4592.82	-125.98	16.08	-408.97	-2.11	-6.12
1	180	141.43	-4592.82	-125.98	16.08	-408.97	-2.11	-6.12
1	180	188.57	-3650.08	-138.10	92.85	-618.62	3.71	4.01
1	180	188.57	-3650.08	-138.10	92.85	-618.62	3.71	4.01
1	180	235.71	-3418.60	-422.02	117.55	-964.83	66.79	69.86
1	180	235.71	-3418.60	-422.02	117.55	-964.83	66.79	69.86
1	180	282.86	-2159.99	-365.04	-7.30	-33.62	59.69	48.02
1	180	330.00	-1839.20	-432.91	-149.15	227.96	4.78	16.04
1	181	0.0	-7753.03	15.42	-422.09	-338.44	175.35	1.19
1	181	47.14	-6509.27	-42.43	-25.83	-283.86	-0.02	-16.22
1	181	47.14	-6509.27	-42.43	-25.83	-283.86	-0.02	-16.22
1	181	94.29	-5539.67	-74.03	15.90	-352.24	-8.75	-12.79
1	181	94.29	-5539.67	-74.03	15.90	-352.24	-8.75	-12.79
1	181	141.43	-4913.56	-86.58	15.90	-472.60	-1.86	-4.44
1	181	141.43	-4913.56	-86.58	15.90	-472.60	-1.86	-4.44
1	181	188.57	-3990.20	-98.20	103.67	-646.37	3.41	4.70
1	181	188.57	-3990.20	-98.20	103.67	-646.37	3.41	4.70
1	181	235.71	-3836.65	-231.01	129.29	-1000.08	74.69	77.23
1	181	235.71	-3836.65	-231.01	129.29	-1000.08	74.69	77.23
1	181	282.86	-2356.80	-237.27	-19.43	-114.17	58.79	65.31
1	181	330.00	-1996.40	-359.82	-153.72	71.95	2.70	33.58
1	182	0.0	-8204.84	0.90	-495.41	-268.59	209.71	1.91
1	182	47.14	-6801.74	-53.95	-33.73	-201.19	2.74	-16.88
1	182	47.14	-6801.74	-53.95	-33.73	-201.19	2.74	-16.88
1	182	94.29	-5730.08	-88.90	16.96	-279.32	-9.35	-13.18
1	182	94.29	-5730.08	-88.90	16.96	-279.32	-9.35	-13.18
1	182	141.43	-5033.69	-102.82	16.96	-412.16	-2.22	-4.84
1	182	141.43	-5033.69	-102.82	16.96	-412.16	-2.22	-4.84
1	182	188.57	-4055.69	-113.23	99.57	-602.33	3.96	4.33
1	182	188.57	-4055.69	-113.23	99.57	-602.33	3.96	4.33
1	182	235.71	-3844.74	-321.66	127.35	-942.04	72.40	75.05
1	182	235.71	-3844.74	-321.66	127.35	-942.04	72.40	75.05
1	182	282.86	-2429.14	-294.74	-6.53	-6.85	64.81	55.89
1	182	330.00	-2096.04	-395.67	-158.11	223.81	6.26	19.52
M_S			**N memb.**	**V memb.**	**V orto**	**M memb.**	**M orto**	**T**
			-1.433e+04	-4149.76	-2001.45	-5342.36	-86.09	-178.43
			-501.84	15.42	805.16	1843.48	535.21	308.06

Macro	Tipo	Angolo 1-Z (gradi)
2	**Setto**	**0.0**

M_S	**Cmb**	**Z**	**N memb.**	**V memb.**	**V orto**	**M memb.**	**M orto**	**T**
		cm	daN	daN	daN	daN m	daN m	daN m
2	27	0.0	-8551.72	-3460.18	956.74	-338.10	-1105.04	150.79
2	27	47.14	-8524.38	-4142.83	956.74	-480.29	-588.93	29.64
2	27	94.29	-7657.40	-4456.57	583.15	31.23	-308.59	-232.19
2	27	141.43	-6730.72	-4693.74	352.01	320.25	-136.60	-369.32
2	27	188.57	-5805.02	-4930.34	284.61	423.87	-3.88	-410.02
2	27	235.71	-4825.48	-5044.86	259.67	276.85	96.90	-333.54
2	27	282.86	-3140.55	-4663.43	88.40	-935.67	64.62	-230.53
2	27	330.00	-1850.26	-2636.89	68.82	-2053.82	32.78	-231.85
2	28	0.0	-7943.01	-3394.54	934.60	139.53	-1099.12	156.92
2	28	47.14	-8135.47	-4130.45	934.60	52.80	-592.56	39.52
2	28	94.29	-7531.17	-4451.27	585.58	566.85	-310.99	-228.13
2	28	141.43	-6814.91	-4688.27	358.85	816.23	-135.24	-366.42
2	28	188.57	-6072.48	-4934.78	291.19	870.54	2.22	-403.32
2	28	235.71	-5246.67	-5078.47	259.93	641.30	106.16	-314.32
2	28	282.86	-3570.62	-4780.93	81.26	-811.27	69.06	-194.93
2	28	330.00	-2186.65	-3199.45	62.57	-2022.50	33.59	-191.98
2	29	0.0	-4964.03	-2493.11	850.99	-1001.76	-958.82	123.04
2	29	47.14	-4927.12	-2946.17	850.99	-1119.92	-503.68	6.42
2	29	94.29	-4381.06	-3191.61	507.07	-635.35	-258.07	-212.12
2	29	141.43	-3846.41	-3400.26	304.37	-314.32	-107.58	-319.81
2	29	188.57	-3350.61	-3614.28	243.00	-152.97	6.70	-340.78
2	29	235.71	-2823.18	-3723.69	205.56	-212.41	85.31	-256.18
2	29	282.86	-1610.75	-3445.50	43.73	-1229.53	36.80	-160.88
2	29	330.00	-677.71	-1875.38	92.48	-2009.98	23.96	-178.36
2	59	0.0	-1.280e+04	-1228.20	286.14	1859.16	-425.15	87.17
2	59	47.14	-1.284e+04	-1826.87	286.14	2271.94	-241.85	85.46
2	59	94.29	-1.166e+04	-2100.10	224.97	2823.26	-131.57	-43.83
2	59	141.43	-1.026e+04	-2324.09	149.60	3141.10	-60.78	-128.77
2	59	188.57	-8709.32	-2552.35	142.44	3351.84	3.83	-182.59
2	59	235.71	-7057.71	-2715.11	183.12	3425.50	81.71	-197.57
2	59	282.86	-5271.69	-2601.62	151.52	2952.83	141.09	-161.15
2	59	330.00	-3730.69	-1846.27	-143.26	1711.38	42.45	-78.94
2	67	0.0	-1332.70	-2876.06	199.82	4791.16	-523.16	118.65
2	67	47.14	-1440.19	-3387.67	199.82	4907.60	-268.64	64.45
2	67	94.29	-2737.62	-3636.57	292.61	5475.21	-180.28	-101.57
2	67	141.43	-3861.66	-3453.34	239.77	5387.74	-80.04	-195.93
2	67	188.57	-4396.36	-3312.62	258.60	5088.94	51.94	-215.44
2	67	235.71	-4772.32	-3399.81	233.66	4517.22	156.11	-128.35
2	67	282.86	-4316.26	-2989.79	-23.80	2411.54	148.90	27.54
2	67	330.00	-2996.44	-6007.60	-114.11	881.21	56.98	86.51

Viale Duca Alessandro n. 11 – 43123 Parma
Cell. 335 1403156 – E mail ing.concari@gmail.com
Sito web: studioaire.it – P.IVA 02561480340

2	78	0.0	-1.276e+04	-365.00	939.27	-3991.28	-853.12	90.34
2	78	47.14	-1.293e+04	-821.89	939.27	-3773.85	-470.67	20.75
2	78	94.29	-1.051e+04	-1068.33	459.41	-3284.40	-202.79	-161.75
2	78	141.43	-8101.82	-1674.30	216.93	-2553.64	-76.47	-249.88
2	78	188.57	-6107.66	-2264.01	123.82	-1864.58	-16.98	-286.76
2	78	235.71	-4331.75	-2580.44	148.69	-1292.73	37.00	-279.86
2	78	282.86	-2070.25	-2609.62	187.76	-886.31	21.03	-284.59
2	78	330.00	-1055.95	2023.98	60.99	-1256.09	9.58	-280.92
2	85	0.0	-4548.83	-3911.77	1800.60	-3073.48	-1313.03	149.56
2	85	47.14	-4656.32	-4423.38	1800.60	-2957.05	-1056.11	-39.85
2	85	94.29	-3761.94	-4760.40	882.63	-2608.02	-474.68	-308.37
2	85	141.43	-3132.75	-5121.05	524.72	-2406.40	-186.64	-461.53
2	85	188.57	-2426.35	-5400.03	380.22	-2234.29	82.71	-478.47
2	85	235.71	-1746.03	-5433.38	209.56	-2316.48	202.14	-351.64
2	85	282.86	-489.31	-5234.59	-185.55	-3096.92	149.42	-226.29
2	85	330.00	286.03	-1504.57	-88.06	-4027.25	33.87	-202.37
2	93	0.0	-4342.82	-3665.18	1730.03	-3148.11	-1303.35	135.82
2	93	47.14	-4450.31	-4176.80	1730.03	-3031.68	-1046.81	-55.35
2	93	94.29	-3594.31	-4459.16	866.33	-2683.98	-481.60	-334.04
2	93	141.43	-2915.01	-4806.56	524.34	-2320.78	-197.95	-489.33
2	93	188.57	-2261.68	-5098.27	390.07	-2035.99	69.92	-506.20
2	93	235.71	-1632.28	-4848.21	225.75	-2016.89	183.32	-376.66
2	93	282.86	-259.71	-4720.99	-169.29	-2763.64	154.60	-261.72
2	93	330.00	223.77	-1316.29	-104.27	-3833.18	34.74	-271.73
2	110	0.0	-1.164e+04	-1111.53	610.50	-1578.73	-596.93	77.49
2	110	47.14	-1.175e+04	-1623.14	610.50	-1462.30	-338.46	43.24
2	110	94.29	-9870.77	-1837.84	322.58	-1174.03	-157.58	-98.22
2	110	141.43	-7911.47	-2222.51	159.71	-816.99	-69.36	-174.46
2	110	188.57	-6191.26	-2591.02	97.62	-511.13	-23.84	-214.64
2	110	235.71	-4598.14	-2787.36	126.74	-305.40	24.99	-222.49
2	110	282.86	-2672.19	-2745.90	148.87	-270.47	32.36	-221.29
2	110	330.00	-1598.07	349.02	8.87	-806.84	9.88	-203.73
2	113	0.0	-5855.56	-3083.97	1269.75	-1502.66	-1014.84	126.48
2	113	47.14	-5963.05	-3595.59	1269.75	-1386.22	-757.99	-5.71
2	113	94.29	-5165.04	-3896.44	650.39	-1016.43	-349.00	-225.20
2	113	141.43	-4469.72	-4185.16	392.57	-855.36	-141.21	-349.49
2	113	188.57	-3685.87	-4421.30	294.35	-751.93	53.49	-372.50
2	113	235.71	-2840.98	-4482.11	188.97	-873.33	151.31	-283.77
2	113	282.86	-1589.83	-4325.63	-76.76	-1650.50	123.06	-182.77
2	113	330.00	-702.50	-1673.52	-64.34	-2562.94	32.17	-155.14
2	117	0.0	-5867.55	-3076.65	1266.77	-1502.26	-1013.63	125.91
2	117	47.14	-5975.03	-3588.27	1266.77	-1385.83	-756.72	-5.34
2	117	94.29	-5164.64	-3887.62	652.78	-1014.52	-349.04	-225.85
2	117	141.43	-4463.81	-4176.46	391.67	-845.30	-141.62	-349.94
2	117	188.57	-3669.10	-4413.79	293.01	-735.10	54.39	-372.63
2	117	235.71	-2858.19	-4476.83	191.41	-851.58	152.85	-284.84
2	117	282.86	-1576.25	-4301.14	-75.24	-1626.66	123.90	-185.11
2	117	330.00	-684.70	-1681.71	-70.43	-2540.87	32.49	-158.11
2	125	0.0	-5741.07	-2913.11	1220.36	-1546.86	-1007.14	117.73
2	125	47.14	-5848.56	-3424.72	1220.36	-1430.43	-750.47	-15.01
2	125	94.29	-5067.73	-3689.90	641.89	-1062.48	-353.38	-241.50
2	125	141.43	-4335.28	-3971.20	391.28	-785.65	-148.00	-366.91
2	125	188.57	-3578.43	-4217.78	299.19	-602.62	46.06	-389.47
2	125	235.71	-2796.51	-4100.48	201.55	-654.07	140.85	-299.68
2	125	282.86	-1434.92	-3974.93	-65.67	-1407.72	127.06	-206.69
2	125	330.00	-732.49	-1557.06	-81.03	-2414.96	32.87	-201.87
2	141	0.0	-5953.44	-2220.79	695.96	-472.81	-799.75	108.03
2	141	47.14	-5913.33	-2672.70	695.96	-526.37	-423.51	19.25
2	141	94.29	-5258.29	-2902.98	422.90	-94.46	-218.78	-167.97
2	141	141.43	-4582.01	-3091.80	255.24	174.61	-93.31	-263.74
2	141	188.57	-3920.36	-3282.54	206.03	301.73	3.10	-288.64
2	141	235.71	-3225.37	-3383.52	183.33	237.98	74.23	-227.26
2	141	282.86	-1991.86	-3142.42	54.85	-629.28	45.45	-149.51
2	141	330.00	-1011.28	-1789.16	52.73	-1410.71	23.27	-152.76
2	143	0.0	-6758.78	-2530.28	689.28	-147.39	-800.91	110.93
2	143	47.14	-6734.35	-3045.32	689.28	-232.09	-427.70	25.75
2	143	94.29	-6039.97	-3281.14	422.71	152.47	-224.42	-165.42
2	143	141.43	-5294.24	-3459.15	255.60	367.16	-99.70	-266.42
2	143	188.57	-4544.66	-3636.11	207.35	444.06	-3.13	-297.93
2	143	235.71	-3754.28	-3723.66	191.63	336.40	71.54	-244.95
2	143	282.86	-2460.91	-3447.12	69.21	-547.62	51.45	-170.59
2	143	330.00	-1457.29	-1973.49	42.31	-1397.50	24.77	-168.11
2	144	0.0	-6352.98	-2486.51	674.52	171.03	-796.96	115.02
2	144	47.14	-6475.08	-3037.07	674.52	123.30	-430.13	32.33
2	144	94.29	-5955.82	-3277.61	424.33	509.55	-226.02	-162.71
2	144	141.43	-5350.37	-3455.50	260.16	697.82	-98.79	-264.49
2	144	188.57	-4722.97	-3639.06	211.74	741.85	0.94	-293.46
2	144	235.71	-4035.08	-3746.07	191.80	579.37	77.72	-232.13
2	144	282.86	-2747.62	-3525.46	64.45	-464.69	54.41	-146.86
2	144	330.00	-1681.55	-2348.53	38.15	-1376.62	25.31	-141.53
2	159	0.0	-9591.58	-1042.29	242.22	1317.45	-347.65	68.51
2	159	47.14	-9611.56	-1501.35	242.22	1602.72	-196.32	62.96
2	159	94.29	-8708.39	-1710.16	183.92	2013.82	-106.41	-39.84
2	159	141.43	-7644.65	-1879.38	120.67	2247.73	-49.16	-106.06
2	159	188.57	-6480.86	-2050.78	112.57	2396.04	2.01	-146.31
2	159	235.71	-5242.44	-2170.50	140.60	2435.50	61.42	-154.30
2	159	282.86	-3881.67	-2072.58	111.29	2044.72	102.43	-124.34
2	159	330.00	-2710.91	-1446.41	-99.07	1112.63	31.21	-66.17
2	171	0.0	-7108.73	-1684.64	513.96	129.53	-614.68	90.68
2	171	47.14	-7081.39	-2118.97	513.96	208.41	-329.33	34.38
2	171	94.29	-6330.90	-2336.60	325.30	633.45	-171.20	-116.67
2	171	141.43	-5516.19	-2517.05	199.64	893.59	-73.66	-198.32
2	171	188.57	-4679.56	-2699.42	166.27	1032.93	3.66	-227.04
2	171	235.71	-3798.69	-2807.89	161.26	1013.26	67.94	-191.07
2	171	282.86	-2538.39	-2632.42	70.99	340.75	63.62	-132.02
2	171	330.00	-1492.74	-1602.17	-2.17	-466.27	25.05	-114.05
2	173	0.0	-7799.03	-1949.91	508.23	408.47	-615.67	93.16
2	173	47.14	-7785.12	-2438.36	508.23	460.64	-332.93	39.95

Viale Duca Alessandro n. 11 – 43123 Parma
Cell. 335 1403156 – E mail ing.concari@gmail.com
Sito web: studioaire.it – P.IVA 02561480340

2	173	94.29	-7000.91	-2660.73	325.14	845.09	-176.04	-114.49
2	173	141.43	-6126.68	-2831.91	199.95	1058.63	-79.14	-200.62
2	173	188.57	-5214.68	-3002.48	167.41	1154.92	-1.69	-235.00
2	173	235.71	-4252.04	-3099.45	168.37	1097.62	65.64	-206.24
2	173	282.86	-2940.44	-2893.59	83.30	410.75	68.77	-150.09
2	173	330.00	-1875.04	-1760.16	-11.11	-454.96	26.34	-127.20
2	174	0.0	-7474.38	-1914.90	496.42	663.21	-612.52	96.43
2	174	47.14	-7577.70	-2431.76	496.42	744.95	-334.86	45.22
2	174	94.29	-6933.58	-2657.91	326.43	1130.76	-177.32	-112.32
2	174	141.43	-6171.58	-2828.99	203.60	1323.15	-78.42	-199.08
2	174	188.57	-5357.32	-3004.84	170.91	1393.15	1.57	-231.43
2	174	235.71	-4476.68	-3117.37	168.51	1292.00	70.58	-195.98
2	174	282.86	-3169.81	-2956.26	79.49	477.09	71.14	-131.10
2	174	330.00	-2054.45	-2060.20	-14.44	-438.25	26.77	-105.94
2	177	0.0	-8365.59	-1652.31	418.82	701.44	-525.02	84.68
2	177	47.14	-8360.57	-2129.56	418.82	827.61	-286.65	47.39
2	177	94.29	-7534.59	-2346.54	277.38	1217.36	-152.43	-89.37
2	177	141.43	-6596.76	-2515.96	172.96	1434.74	-69.03	-168.55
2	177	188.57	-5601.92	-2685.41	148.45	1545.32	-0.66	-204.67
2	177	235.71	-4549.67	-2788.82	158.17	1517.44	63.62	-188.11
2	177	282.86	-3224.59	-2618.68	91.72	929.21	78.96	-140.83
2	177	330.00	-2125.76	-1654.75	-39.38	47.07	27.63	-106.81
2	179	0.0	-7932.25	-1676.16	385.92	585.07	-481.61	78.03
2	179	47.14	-7885.76	-2125.77	385.92	660.74	-263.16	44.92
2	179	94.29	-7012.75	-2325.72	254.57	987.34	-140.19	-79.67
2	179	141.43	-6053.22	-2474.88	156.98	1152.47	-64.77	-151.59
2	179	188.57	-5059.84	-2619.07	132.09	1211.14	-4.08	-184.36
2	179	235.71	-4029.75	-2703.17	138.87	1138.77	52.07	-169.41
2	179	282.86	-2754.08	-2536.27	77.10	571.22	62.75	-126.79
2	179	330.00	-1678.41	-1616.72	-26.75	-212.16	21.87	-101.56
2	181	0.0	-8622.55	-1941.43	380.19	864.00	-482.61	80.51
2	181	47.14	-8589.49	-2445.16	380.19	912.97	-266.76	50.49
2	181	94.29	-7682.76	-2649.85	254.41	1198.98	-145.03	-77.48
2	181	141.43	-6663.71	-2789.74	157.29	1317.51	-70.24	-153.89
2	181	188.57	-5594.96	-2922.13	133.23	1333.14	-9.43	-192.32
2	181	235.71	-4483.11	-2994.73	145.99	1223.12	49.77	-184.58
2	181	282.86	-3156.12	-2797.44	89.41	641.21	67.89	-144.85
2	181	330.00	-2060.71	-1774.72	-35.69	-200.84	23.16	-114.72
2	182	0.0	-8297.90	-1906.42	368.38	1118.74	-479.45	83.78
2	182	47.14	-8382.07	-2438.56	368.38	1197.28	-268.70	55.75
2	182	94.29	-7615.43	-2647.03	255.70	1484.65	-146.31	-75.32
2	182	141.43	-6708.60	-2786.82	160.94	1582.03	-69.52	-152.35
2	182	188.57	-5737.61	-2924.49	136.73	1571.37	-6.17	-188.75
2	182	235.71	-4707.74	-3012.65	146.12	1417.50	54.71	-174.33
2	182	282.86	-3385.49	-2860.10	85.60	707.56	70.26	-125.87
2	182	330.00	-2240.12	-2074.75	-39.02	-184.14	23.59	-93.46
M_S			**N memb.**	**V memb.**	**V orto**	**M memb.**	**M orto**	**T**
			-1.293e+04	-6007.60	-185.55	-4027.25	-1313.03	-506.20
			286.03	2023.98	1800.60	5475.21	202.14	156.92

Macro	Tipo	Angolo 1-Z (gradi)
4	**Setto**	**0.0**

M_S	**Cmb**	**Z**	**N memb.**	**V memb.**	**V orto**	**M memb.**	**M orto**	**T**
		cm	daN	daN	daN	daN m	daN m	daN m
4	26	0.0	-7497.54	-6566.68	823.81	-3135.15	-990.25	172.14
4	26	47.14	-7464.63	-7029.55	823.81	-882.33	-530.54	230.55
4	26	94.29	-6861.52	-6340.16	219.44	-103.62	-326.06	75.56
4	26	141.43	-6654.22	-5233.29	39.90	-189.63	-250.18	10.34
4	26	188.57	-6582.28	-4093.28	134.86	-722.86	-183.41	-10.57
4	26	235.71	-6344.37	-3139.23	307.32	-1176.42	-87.86	14.04
4	26	282.86	-5597.26	-2566.49	474.09	-891.80	52.96	68.59
4	26	330.00	-4376.75	-3221.81	268.67	-153.73	84.77	104.20
4	28	0.0	-9051.59	-6488.43	1049.17	-2998.51	-1175.51	178.70
4	28	47.14	-8970.64	-6954.68	1049.17	-689.92	-610.60	243.35
4	28	94.29	-8340.48	-6278.16	336.92	148.93	-352.37	81.13
4	28	141.43	-8140.02	-5187.24	89.38	90.51	-255.42	9.90
4	28	188.57	-8079.63	-4061.11	155.32	-421.76	-179.81	-15.34
4	28	235.71	-7827.84	-3115.25	323.86	-837.10	-75.95	7.03
4	28	282.86	-7013.00	-2535.05	511.16	-467.96	86.02	57.51
4	28	330.00	-5696.49	-3126.20	225.14	273.72	97.37	74.43
4	44	0.0	-9780.25	-4685.12	926.40	-981.46	-1089.57	116.45
4	44	47.14	-9723.48	-5159.42	926.40	960.20	-576.74	170.92
4	44	94.29	-8996.80	-4429.30	248.07	2067.29	-348.77	63.60
4	44	141.43	-8649.66	-3254.46	33.55	2445.33	-272.34	5.61
4	44	188.57	-8463.80	-2019.78	135.77	2311.25	-206.62	-23.67
4	44	235.71	-8164.66	-929.01	349.22	1957.61	-97.40	-21.49
4	44	282.86	-7436.11	-92.46	588.12	1830.11	93.52	-18.79
4	44	330.00	-6217.49	925.96	263.84	1950.31	111.37	-104.93
4	61	0.0	-5104.88	-2665.41	371.66	88.86	-552.50	46.48
4	61	47.14	-5172.08	-2998.86	371.66	1253.10	-315.92	70.51
4	61	94.29	-4675.52	-2411.37	15.41	2074.28	-221.86	25.90
4	61	141.43	-4410.12	-1495.80	-50.14	2472.75	-196.95	-2.24
4	61	188.57	-4263.07	-540.73	69.24	2490.72	-162.65	-17.49
4	61	235.71	-4058.47	309.25	236.21	2234.75	-95.33	-17.20
4	61	282.86	-3578.37	997.18	384.85	1932.89	12.15	-28.19
4	61	330.00	-2815.14	2301.11	277.21	1794.38	62.65	-122.67
4	74	0.0	3324.54	-4185.59	850.94	-1114.88	-389.74	-29.84
4	74	47.14	3321.19	-4646.65	850.94	842.53	-69.44	34.80
4	74	94.29	2685.09	-3993.31	159.18	1339.27	-110.82	-64.57
4	74	141.43	1663.36	-2943.68	52.50	1324.63	-117.58	-96.31
4	74	188.57	-1181.46	-1846.67	87.94	-971.57	-72.92	-55.55

Viale Duca Alessandro n. 11 – 43123 Parma
Cell. 335 1403156 – E mail ing.concari@gmail.com
Sito web: studioaire.it – P.IVA 02561480340

4	74	235.71	-2132.69	-947.42	197.96	-1665.53	24.92	62.60
4	74	282.86	622.45	-99.53	-91.43	982.71	17.70	84.46
4	74	330.00	1089.18	736.50	533.69	1706.00	-36.24	23.22
4	75	0.0	-1.607e+04	-5021.21	365.25	-2088.53	-1138.88	253.72
4	75	47.14	-1.605e+04	-5344.39	365.25	-648.72	-761.77	276.08
4	75	94.29	-1.444e+04	-4846.55	100.33	436.27	-419.21	173.04
4	75	141.43	-1.305e+04	-4011.19	-57.15	782.59	-312.04	110.23
4	75	188.57	-1.006e+04	-3116.10	100.61	2625.55	-259.96	31.55
4	75	235.71	-8734.39	-2261.83	324.11	2704.30	-197.81	-64.41
4	75	282.86	-1.035e+04	-1846.75	949.31	147.07	67.77	-45.35
4	75	330.00	-8978.56	-2061.93	-37.05	75.27	188.09	-44.97
4	91	0.0	-9202.46	-8677.87	741.81	-3681.89	-1012.54	284.74
4	91	47.14	-9177.05	-9001.06	741.81	-2242.07	-632.35	272.98
4	91	94.29	-8313.93	-8493.99	255.58	-1049.46	-350.66	140.11
4	91	141.43	-7888.62	-7490.72	76.30	-1087.67	-252.09	55.83
4	91	188.57	-7122.08	-6385.91	136.63	-1070.28	-163.11	15.90
4	91	235.71	-6664.63	-5409.86	269.96	-1337.60	-85.74	12.70
4	91	282.86	-6585.40	-5428.05	452.87	-1140.06	57.42	67.74
4	91	330.00	-5446.89	-6530.45	127.00	-759.95	106.43	84.24
4	95	0.0	-9223.44	-8551.57	746.58	-3693.82	-1004.00	293.27
4	95	47.14	-9198.03	-8874.76	746.58	-2254.01	-624.25	279.73
4	95	94.29	-8334.39	-8357.57	255.23	-1062.91	-350.32	150.73
4	95	141.43	-7915.19	-7360.55	72.62	-1102.77	-253.42	62.13
4	95	188.57	-7111.71	-6267.86	134.75	-1043.17	-167.85	19.55
4	95	235.71	-6643.30	-5284.26	267.19	-1313.23	-91.79	12.70
4	95	282.86	-6651.05	-5299.18	459.94	-1279.23	61.91	72.28
4	95	330.00	-5482.91	-6238.72	127.48	-885.89	102.60	94.87
4	109	0.0	-717.46	-4544.15	970.77	-1508.93	-627.37	59.51
4	109	47.14	-692.05	-4867.33	970.77	-69.11	-245.31	89.21
4	109	94.29	-821.94	-4327.78	307.02	528.81	-164.86	-6.75
4	109	141.43	-1343.46	-3457.85	132.79	447.25	-119.24	-54.59
4	109	188.57	-3088.06	-2571.63	122.02	-1222.52	-54.03	-37.24
4	109	235.71	-3576.49	-1872.80	187.41	-1791.86	30.09	43.44
4	109	282.86	-1540.62	-1497.77	0.21	170.78	51.76	76.71
4	109	330.00	-869.18	-1405.84	318.54	670.21	-3.74	47.44
4	112	0.0	-1.232e+04	-2870.83	415.53	-834.71	-972.47	132.49
4	112	47.14	-1.230e+04	-3194.02	415.53	605.10	-594.25	180.11
4	112	94.29	-1.115e+04	-2680.04	102.01	1375.12	-332.04	98.09
4	112	141.43	-1.019e+04	-1905.85	-41.79	1696.78	-254.43	58.81
4	112	188.57	-8236.85	-1109.08	91.97	2915.16	-218.48	4.96
4	112	235.71	-7322.58	-380.94	289.45	2917.37	-154.37	-57.93
4	112	282.86	-8211.59	223.94	754.66	1056.31	58.97	-57.63
4	112	330.00	-7027.35	587.30	46.33	1066.79	144.13	-91.76
4	119	0.0	-8163.22	-6266.12	701.07	-2676.00	-909.13	213.08
4	119	47.14	-8137.81	-6589.30	701.07	-1236.18	-529.07	222.45
4	119	94.29	-7411.58	-6067.91	221.01	-253.52	-307.41	109.82
4	119	141.43	-7056.02	-5166.20	53.52	-213.89	-226.12	39.27
4	119	188.57	-6488.86	-4214.11	120.20	-240.84	-156.49	6.01
4	119	235.71	-6111.20	-3366.93	254.47	-556.64	-84.26	3.21
4	119	282.86	-5929.79	-3072.60	463.71	-764.73	55.67	47.60
4	119	330.00	-4840.22	-3505.98	150.47	-454.68	86.59	65.49
4	123	0.0	-8134.77	-6722.91	716.57	-2654.47	-927.53	208.42
4	123	47.14	-8109.36	-7046.09	716.57	-1214.66	-547.34	217.16
4	123	94.29	-7390.89	-6525.11	232.23	-238.08	-309.29	103.15
4	123	141.43	-7050.33	-5582.35	62.98	-222.09	-227.40	35.41
4	123	188.57	-6536.49	-4567.32	124.45	-293.63	-153.11	3.51
4	123	235.71	-6172.67	-3687.31	258.06	-567.87	-77.59	4.76
4	123	282.86	-5911.67	-3531.88	422.21	-439.24	55.74	43.77
4	123	330.00	-4857.36	-4052.44	150.22	-125.39	92.48	40.77
4	142	0.0	-5691.70	-4780.85	629.07	-2200.91	-753.14	124.83
4	142	47.14	-5672.91	-5124.72	629.07	-540.85	-402.47	167.52
4	142	94.29	-5208.98	-4598.19	170.17	52.66	-246.23	54.56
4	142	141.43	-5044.94	-3761.35	32.80	4.56	-188.25	6.36
4	142	188.57	-4984.98	-2903.54	103.27	-381.63	-137.65	-9.33
4	142	235.71	-4799.59	-2187.85	231.92	-719.21	-65.87	8.57
4	142	282.86	-4226.60	-1754.68	355.47	-521.12	39.10	47.16
4	142	330.00	-3297.64	-2170.31	202.71	-0.32	63.38	66.69
4	144	0.0	-6727.73	-4728.69	779.32	-2109.82	-876.64	129.20
4	144	47.14	-6676.91	-5074.81	779.32	-412.58	-455.84	176.06
4	144	94.29	-6194.95	-4556.85	248.49	221.04	-263.77	58.27
4	144	141.43	-6035.47	-3730.65	65.78	191.32	-191.73	6.06
4	144	188.57	-5983.22	-2882.10	116.91	-180.89	-135.25	-12.51
4	144	235.71	-5788.57	-2171.86	242.94	-493.00	-57.93	3.90
4	144	282.86	-5170.42	-1733.72	380.18	-238.56	61.14	39.77
4	144	330.00	-4177.47	-2106.57	173.70	284.64	71.78	46.85
4	152	0.0	-7213.51	-3526.48	697.47	-765.12	-819.35	87.70
4	152	47.14	-7178.81	-3877.97	697.47	687.50	-433.27	127.77
4	152	94.29	-6632.49	-3324.28	189.26	1499.94	-261.37	46.58
4	152	141.43	-6375.22	-2442.13	28.56	1761.20	-203.02	3.21
4	152	188.57	-6239.34	-1521.20	103.88	1641.11	-153.13	-18.06
4	152	235.71	-6013.12	-714.36	259.85	1370.14	-72.23	-15.11
4	152	282.86	-5452.49	-105.33	431.49	1293.48	66.14	-11.10
4	152	330.00	-4524.80	594.87	199.49	1402.38	81.11	-72.73
4	157	0.0	-5136.61	-2784.60	447.45	-217.78	-600.76	56.14
4	157	47.14	-5189.26	-3095.12	447.45	953.81	-332.55	81.56
4	157	94.29	-4703.58	-2536.12	69.97	1687.22	-220.05	27.72
4	157	141.43	-4462.04	-1678.43	-17.94	1975.95	-184.94	-2.82
4	157	188.57	-4334.04	-797.20	79.57	1911.18	-146.88	-17.36
4	157	235.71	-4130.68	-31.39	225.06	1652.51	-81.79	-13.44
4	157	282.86	-3623.30	555.57	355.09	1472.12	17.58	-15.21
4	157	330.00	-2826.28	1477.98	243.82	1451.67	58.93	-88.72
4	164	0.0	-6649.82	-3812.08	703.98	-1212.57	-813.11	98.62
4	164	47.14	-6621.63	-4144.21	703.98	264.92	-426.88	138.48
4	164	94.29	-6112.61	-3612.56	206.36	967.99	-253.03	47.27
4	164	141.43	-5899.57	-2776.96	44.23	1096.39	-190.83	2.68
4	164	188.57	-5799.81	-1917.46	107.36	872.58	-139.69	-16.07
4	164	235.71	-5588.82	-1184.34	242.83	589.65	-64.04	-7.12
4	164	282.86	-5009.48	-675.97	387.41	647.83	56.94	9.74

Viale Duca Alessandro n. 11 – 43123 Parma
Cell. 335 1403156 – E mail ing.concari@gmail.com
Sito web: studioaire.it – P.IVA 02561480340

4	164	330.00	-4073.51	-431.86	186.53	911.98	72.11	-23.58
4	172	0.0	-5620.65	-3932.68	577.98	-1424.53	-705.59	98.13
4	172	47.14	-5619.78	-4256.48	577.98	25.99	-379.25	134.46
4	172	94.29	-5133.41	-3724.87	145.09	661.12	-235.34	44.45
4	172	141.43	-4925.16	-2895.53	21.21	733.75	-183.93	2.90
4	172	188.57	-4825.39	-2048.28	96.99	466.74	-137.41	-12.73
4	172	235.71	-4624.85	-1334.61	228.54	156.66	-67.92	-0.93
4	172	282.86	-4081.16	-862.68	353.71	201.21	36.44	22.00
4	172	330.00	-3197.51	-793.57	205.70	506.71	62.57	8.57
4	174	0.0	-6508.68	-3887.96	706.76	-1346.45	-811.45	101.87
4	174	47.14	-6480.36	-4213.70	706.76	135.94	-425.00	141.77
4	174	94.29	-5978.53	-3689.45	212.22	805.44	-250.37	47.63
4	174	141.43	-5774.18	-2869.21	49.48	893.83	-186.92	2.65
4	174	188.57	-5681.02	-2029.90	108.68	638.79	-135.35	-15.45
4	174	235.71	-5472.55	-1320.91	237.99	350.56	-61.12	-4.94
4	174	282.86	-4890.16	-844.72	374.89	443.40	55.33	15.67
4	174	330.00	-3951.65	-738.94	180.83	750.96	69.77	-8.43
4	175	0.0	-5102.67	-3490.71	519.78	-955.70	-657.49	80.79
4	175	47.14	-5140.33	-3804.19	519.78	376.54	-356.75	111.21
4	175	94.29	-4687.25	-3262.68	114.27	1030.99	-226.68	35.55
4	175	141.43	-4501.98	-2428.31	6.07	1170.48	-181.82	-0.98
4	175	188.57	-4423.46	-1576.32	88.77	972.81	-139.02	-14.77
4	175	235.71	-4237.00	-851.27	220.24	695.97	-74.12	-3.77
4	175	282.86	-3688.46	-344.43	337.10	706.88	19.01	11.31
4	175	330.00	-2842.06	15.18	228.28	916.07	56.28	-27.90
4	179	0.0	-5200.06	-3022.99	599.03	-831.06	-697.28	75.48
4	179	47.14	-5223.63	-3287.64	599.03	355.25	-365.81	103.68
4	179	94.29	-4759.71	-2785.61	179.10	913.10	-216.42	31.34
4	179	141.43	-4565.90	-2043.68	46.47	982.35	-160.93	-4.00
4	179	188.57	-4476.00	-1310.14	100.22	752.11	-115.35	-17.10
4	179	235.71	-4275.08	-712.69	202.78	488.02	-54.72	-5.91
4	179	282.86	-3713.15	-327.65	295.57	550.57	28.45	10.74
4	179	330.00	-2848.57	-168.27	177.02	766.25	51.50	-20.81
4	180	0.0	-5742.68	-3079.95	628.19	-927.32	-720.78	80.29
4	180	47.14	-5733.93	-3349.48	628.19	286.42	-377.16	111.76
4	180	94.29	-5219.82	-2851.99	193.48	855.82	-220.98	36.06
4	180	141.43	-4974.70	-2111.19	53.12	925.74	-162.85	-1.27
4	180	188.57	-4838.33	-1377.74	104.85	688.77	-115.66	-16.52
4	180	235.71	-4613.84	-782.10	212.02	401.40	-50.71	-7.99
4	180	282.86	-4075.87	-402.58	317.61	407.86	45.95	8.36
4	180	330.00	-3196.81	-273.73	157.87	607.63	58.69	-13.62
4	182	0.0	-6630.70	-3035.24	756.97	-849.25	-826.64	84.03
4	182	47.14	-6594.50	-3306.70	756.97	396.37	-422.91	119.07
4	182	94.29	-6064.93	-2816.56	260.61	1000.14	-236.02	39.24
4	182	141.43	-5823.73	-2084.87	81.39	1085.82	-165.84	-1.53
4	182	188.57	-5693.96	-1359.36	116.55	860.82	-113.60	-19.24
4	182	235.71	-5461.54	-768.39	221.47	595.30	-43.90	-12.00
4	182	282.86	-4884.86	-384.62	338.79	650.06	64.84	2.03
4	182	330.00	-3950.95	-219.10	133.00	851.89	65.89	-30.63
M_S			**N memb.**	**V memb.**	**V orto**	**M memb.**	**M orto**	**T**
			-1.607e+04	-9001.06	-91.43	-3693.82	-1175.51	-122.67
			3324.54	2301.11	1049.17	2917.37	188.09	293.27

Macro	Tipo	Angolo 1-Z (gradi)
5	**Setto**	**0.0**

M_S	**Cmb**	**Z**	**N memb.**	**V memb.**	**V orto**	**M memb.**	**M orto**	**T**
		cm	daN	daN	daN	daN m	daN m	daN m
5	27	0.0	-2.669e+04	2441.41	-1118.81	1.126e+04	821.31	-50.61
5	27	47.14	-2.697e+04	1823.53	-1118.81	1.231e+04	450.64	-318.71
5	27	94.29	-2.435e+04	1858.73	-585.78	1.153e+04	196.91	-280.15
5	27	141.43	-2.094e+04	1961.86	-294.18	9942.49	70.84	-194.70
5	27	188.57	-1.721e+04	1982.13	-156.27	8497.90	-7.23	-118.49
5	27	235.71	-1.345e+04	1703.09	-87.54	8028.11	-67.33	-85.40
5	27	282.86	-1.227e+04	1759.78	-143.91	6068.37	-160.87	-185.93
5	27	330.00	-9086.41	241.46	272.21	7649.30	-41.61	-265.57
5	28	0.0	-2.701e+04	1770.25	-1048.91	1.287e+04	763.14	-48.23
5	28	47.14	-2.741e+04	1036.94	-1048.91	1.386e+04	428.83	-314.64
5	28	94.29	-2.479e+04	1073.63	-546.92	1.308e+04	194.17	-277.56
5	28	141.43	-2.132e+04	1187.16	-268.48	1.148e+04	78.93	-188.15
5	28	188.57	-1.752e+04	1209.47	-136.49	9998.87	8.97	-103.51
5	28	235.71	-1.368e+04	941.01	-78.92	9396.91	-47.05	-54.38
5	28	282.86	-1.228e+04	902.88	-177.16	7011.39	-158.67	-171.19
5	28	330.00	-9117.55	-1006.64	273.31	8271.36	-43.50	-264.95
5	61	0.0	-8104.36	672.84	-616.53	3496.48	493.50	-16.97
5	61	47.14	-8239.76	421.67	-616.53	3838.33	271.30	-115.74
5	61	94.29	-7034.72	466.23	-326.07	3589.16	129.93	-86.53
5	61	141.43	-5629.86	537.07	-157.49	2860.44	60.48	-38.96
5	61	188.57	-4215.23	577.19	-78.53	1876.22	19.63	-2.80
5	61	235.71	-2870.11	538.26	-29.63	906.19	-1.77	-0.14
5	61	282.86	-1982.05	603.94	85.98	-194.49	38.58	-28.25
5	61	330.00	-1031.88	317.15	-22.64	129.61	25.61	24.97
5	77	0.0	-2.201e+04	8746.63	-1220.98	-4301.57	802.86	13.25
5	77	47.14	-2.232e+04	8324.25	-1220.98	-3674.11	543.22	-227.25
5	77	94.29	-1.944e+04	8651.72	-628.88	-3899.47	204.36	-222.81
5	77	141.43	-1.596e+04	8408.17	-244.36	-5614.48	44.98	-187.44
5	77	188.57	-1.183e+04	8067.25	-128.38	-6114.36	-40.80	-172.17
5	77	235.71	-8806.99	7497.77	-79.59	-6922.88	-100.06	-209.01
5	77	282.86	-7709.94	7639.03	-19.34	-4349.68	-122.54	-258.51
5	77	330.00	-5783.03	6980.35	237.13	-1340.62	-49.15	-244.01
5	90	0.0	-1.208e+04	1455.34	-1163.47	1556.09	509.99	13.64
5	90	47.14	-1.167e+04	602.92	-1163.47	1924.02	498.16	-246.99

Viale Duca Alessandro n. 11 – 43123 Parma
Cell. 335 1403156 – E mail ing.concari@gmail.com
Sito web: studioaire.it – P.IVA 02561480340

5	90	94.29	-8693.31	1236.96	-464.21	944.51	163.26	-198.45
5	90	141.43	-5704.34	918.38	-223.27	-131.07	44.57	-121.17
5	90	188.57	-2816.91	859.14	-79.12	-1371.72	10.63	-41.00
5	90	235.71	4.05	621.69	-20.91	-2535.35	-13.50	13.43
5	90	282.86	675.50	694.94	376.08	-1802.67	-1.33	-69.25
5	90	330.00	1094.68	48.01	-220.40	-1513.88	61.40	46.01
5	93	0.0	-3.057e+04	4704.06	-343.11	9010.20	415.83	-69.81
5	93	47.14	-3.088e+04	4281.68	-343.11	9637.65	156.19	-304.42
5	93	94.29	-2.796e+04	3937.27	-281.91	9026.54	128.19	-320.89
5	93	141.43	-2.393e+04	4223.07	-81.69	6925.87	99.98	-268.06
5	93	188.57	-1.941e+04	4172.91	-18.86	5352.80	79.97	-201.62
5	93	235.71	-1.533e+04	3802.54	-4.49	4828.76	78.83	-137.40
5	93	282.86	-1.349e+04	3879.46	-435.40	3428.72	-28.74	-255.21
5	93	330.00	-1.006e+04	2644.58	320.73	5996.83	-68.18	-363.51
5	109	0.0	-1.922e+04	5756.22	-1037.85	300.61	712.74	-1.24
5	109	47.14	-1.953e+04	5333.84	-1037.85	928.06	452.15	-208.53
5	109	94.29	-1.721e+04	5537.06	-535.02	667.09	180.41	-195.00
5	109	141.43	-1.432e+04	5409.91	-221.89	-763.65	50.43	-149.94
5	109	188.57	-1.097e+04	5200.76	-116.38	-1472.75	-22.28	-120.67
5	109	235.71	-8286.51	4801.69	-69.61	-2248.10	-73.58	-136.52
5	109	282.86	-7217.49	4891.61	-28.67	-1319.48	-100.14	-189.87
5	109	330.00	-5355.32	4009.45	194.99	729.41	-34.27	-190.20
5	122	0.0	-6933.46	1289.69	-1232.65	1608.12	798.35	18.35
5	122	47.14	-7239.82	867.31	-1232.65	2235.57	535.45	-111.90
5	122	94.29	-6169.03	1297.18	-587.10	2099.78	183.77	-58.40
5	122	141.43	-5011.85	1102.08	-306.64	1692.48	22.62	-1.90
5	122	188.57	-3823.86	1043.67	-181.13	1103.25	-70.51	21.60
5	122	235.71	-2483.32	909.48	-106.42	555.17	-146.02	-19.25
5	122	282.86	-2090.57	905.31	247.95	414.86	-121.90	-26.46
5	122	330.00	-1380.19	178.11	31.42	658.16	14.82	22.31
5	125	0.0	-2.427e+04	3262.02	-493.88	8284.99	472.94	-51.46
5	125	47.14	-2.458e+04	2839.64	-493.88	8912.44	212.21	-254.52
5	125	94.29	-2.223e+04	2635.33	-317.70	8403.68	133.47	-252.41
5	125	141.43	-1.903e+04	2840.14	-121.37	6770.83	85.43	-197.00
5	125	188.57	-1.548e+04	2816.21	-49.00	5448.03	53.48	-137.29
5	125	235.71	-1.222e+04	2545.78	-22.37	4924.28	38.36	-92.16
5	125	282.86	-1.073e+04	2602.07	-279.10	3425.72	-40.05	-187.96
5	125	330.00	-7969.29	1445.47	246.09	5233.58	-45.39	-264.05
5	143	0.0	-1.954e+04	1794.67	-846.18	8209.71	625.66	-36.85
5	143	47.14	-1.976e+04	1341.63	-846.18	8981.67	342.24	-233.36
5	143	94.29	-1.783e+04	1369.46	-443.76	8417.44	149.62	-203.60
5	143	141.43	-1.532e+04	1446.82	-223.03	7236.57	53.61	-139.68
5	143	188.57	-1.258e+04	1463.09	-119.21	6147.33	-6.12	-83.80
5	143	235.71	-9812.87	1262.11	-66.39	5759.38	-51.61	-61.69
5	143	282.86	-8908.44	1307.03	-97.70	4291.07	-115.96	-134.28
5	143	330.00	-6553.90	203.51	197.88	5441.89	-28.90	-188.88
5	144	0.0	-1.976e+04	1347.23	-799.58	9284.90	586.87	-35.27
5	144	47.14	-2.006e+04	817.24	-799.58	1.002e+04	327.70	-230.65
5	144	94.29	-1.812e+04	846.06	-417.85	9446.73	147.79	-201.86
5	144	141.43	-1.557e+04	930.35	-205.89	8259.52	59.00	-135.32
5	144	188.57	-1.278e+04	947.99	-106.02	7147.98	4.69	-73.81
5	144	235.71	-9968.98	754.05	-60.65	6671.91	-38.09	-41.01
5	144	282.86	-8917.59	735.77	-119.87	4919.75	-114.49	-124.46
5	144	330.00	-6574.66	-628.56	198.61	5856.60	-30.16	-188.47
5	157	0.0	-9783.25	866.21	-661.78	4090.78	524.29	-19.10
5	157	47.14	-9951.94	595.98	-661.78	4502.35	285.40	-129.39
5	157	94.29	-8681.49	636.59	-350.47	4211.99	132.49	-99.75
5	157	141.43	-7152.69	705.34	-172.26	3427.56	56.28	-50.67
5	157	188.57	-5572.23	738.98	-89.92	2455.96	9.85	-13.87
5	157	235.71	-4032.82	675.62	-39.83	1622.39	-17.99	-12.00
5	157	282.86	-3143.45	737.25	52.92	484.06	3.95	-44.65
5	157	330.00	-1928.66	317.78	25.90	942.30	14.17	-12.94
5	173	0.0	-1.585e+04	1488.90	-807.16	6806.63	615.85	-29.74
5	173	47.14	-1.609e+04	1111.39	-807.16	7485.93	334.21	-192.69
5	173	94.29	-1.448e+04	1147.50	-426.29	7073.04	148.14	-161.69
5	173	141.43	-1.240e+04	1222.04	-213.95	6078.73	54.41	-103.00
5	173	188.57	-1.016e+04	1242.89	-116.22	5070.54	-4.77	-56.04
5	173	235.71	-7900.95	1091.90	-62.32	4557.40	-47.62	-46.21
5	173	282.86	-7050.99	1138.17	-42.11	3172.54	-79.75	-100.97
5	173	330.00	-5125.71	261.88	145.08	4082.99	-14.86	-125.94
5	174	0.0	-1.603e+04	1130.96	-769.88	7666.78	584.82	-28.47
5	174	47.14	-1.633e+04	691.88	-769.88	8312.83	322.58	-190.52
5	174	94.29	-1.471e+04	728.78	-405.56	7896.47	146.67	-160.31
5	174	141.43	-1.261e+04	808.87	-200.24	6897.09	58.72	-99.51
5	174	188.57	-1.032e+04	830.81	-105.67	5871.05	3.87	-48.05
5	174	235.71	-8025.84	685.46	-57.72	5287.43	-36.80	-29.67
5	174	282.86	-7058.31	681.16	-59.85	3675.48	-78.58	-93.11
5	174	330.00	-5142.32	-403.78	145.66	4414.76	-15.86	-125.60
5	175	0.0	-1.341e+04	1180.29	-703.73	5376.30	537.76	-25.58
5	175	47.14	-1.357e+04	842.43	-703.73	5877.03	293.89	-166.98
5	175	94.29	-1.200e+04	873.32	-370.04	5434.40	132.96	-138.49
5	175	141.43	-1.006e+04	942.60	-183.33	4468.76	53.25	-84.97
5	175	188.57	-8008.04	969.91	-95.50	3432.04	4.95	-40.76
5	175	235.71	-5972.54	857.30	-46.36	2751.36	-26.96	-28.73
5	175	282.86	-5023.08	917.63	-5.85	1548.95	-38.78	-77.89
5	175	330.00	-3345.03	270.51	87.49	2249.23	-1.75	-78.90
5	179	0.0	-1.314e+04	1252.97	-752.27	5279.37	585.86	-23.35
5	179	47.14	-1.338e+04	944.58	-752.27	5830.39	313.60	-156.69
5	179	94.29	-1.198e+04	977.30	-399.28	5457.65	137.60	-126.20
5	179	141.43	-1.020e+04	1041.86	-201.79	4561.82	47.88	-74.10
5	179	188.57	-8286.24	1062.55	-112.68	3615.45	-9.70	-36.02
5	179	235.71	-6358.24	950.36	-60.24	3054.78	-50.43	-35.72
5	179	282.86	-5466.24	1003.86	-13.20	1841.17	-65.31	-77.46
5	179	330.00	-3722.20	319.03	123.00	2567.68	-8.72	-88.77
5	181	0.0	-1.379e+04	1413.30	-839.08	6070.51	661.28	-24.13
5	181	47.14	-1.411e+04	1100.89	-839.08	6760.43	351.37	-163.10
5	181	94.29	-1.282e+04	1143.75	-448.31	6497.93	152.93	-129.38
5	181	141.43	-1.112e+04	1212.93	-228.48	5668.12	50.09	-74.39

Viale Duca Alessandro n. 11 – 43123 Parma
Cell. 335 1403156 – E mail ing.concari@gmail.com
Sito web: studioaire.it – P.IVA 02561480340

5	181	188.57	-9262.45	1229.71	-132.07	4789.65	-18.21	-37.71
5	181	235.71	-7365.72	1103.37	-74.12	4331.27	-68.61	-45.56
5	181	282.86	-6607.44	1142.88	-21.22	2965.77	-87.47	-84.18
5	181	330.00	-4838.24	337.57	153.26	3785.73	-14.58	-104.22
5	182	0.0	-1.396e+04	1055.35	-801.80	6930.66	630.25	-22.86
5	182	47.14	-1.434e+04	681.37	-801.80	7587.33	339.73	-160.93
5	182	94.29	-1.306e+04	725.03	-427.58	7321.37	151.47	-127.99
5	182	141.43	-1.133e+04	799.75	-214.77	6486.48	54.40	-70.90
5	182	188.57	-9426.92	817.62	-121.52	5590.17	-9.57	-29.72
5	182	235.71	-7490.61	696.93	-69.52	5061.30	-57.79	-29.01
5	182	282.86	-6614.76	685.87	-38.95	3468.71	-86.30	-76.32
5	182	330.00	-4854.85	-328.09	153.84	4117.49	-15.59	-103.89
M_S			**N memb.**	**V memb.**	**V orto**	**M memb.**	**M orto**	**T**
			-3.088e+04	-1006.64	-1232.65	-6922.88	-160.87	-363.51
			1094.68	8746.63	376.08	1.386e+04	821.31	46.01

Macro	Tipo	Angolo 1-Z (gradi)
6	**Setto**	**0.0**

M_S	**Cmb**	**Z**	**N memb.**	**V memb.**	**V orto**	**M memb.**	**M orto**	**T**
		cm	daN	daN	daN	daN m	daN m	daN m
6	20	0.0	-4754.17	-6164.55	-464.90	-3249.11	427.64	-86.14
6	20	47.14	-5143.17	-7303.19	-464.90	-1097.74	147.55	-113.03
6	20	94.29	-4721.20	-6812.55	36.91	349.04	76.61	-46.66
6	20	141.43	-4458.57	-5664.11	158.33	1253.62	89.13	-20.67
6	20	188.57	-4421.65	-4369.80	72.90	1626.04	96.17	-3.03
6	20	235.71	-4585.63	-3188.29	-65.07	1607.33	76.18	4.74
6	20	282.86	-4748.84	-2231.37	-212.09	1427.75	11.66	1.79
6	20	330.00	-3854.41	-1654.12	-204.46	1248.12	-34.43	17.95
6	27	0.0	-5452.11	-5958.93	-571.44	-3469.94	474.75	-88.70
6	27	47.14	-5875.40	-7072.17	-571.44	-1345.84	151.42	-116.00
6	27	94.29	-5472.65	-6626.80	-8.70	86.04	65.86	-47.83
6	27	141.43	-5211.90	-5557.58	145.51	982.26	75.32	-21.39
6	27	188.57	-5181.26	-4357.00	77.49	1358.34	82.33	-3.13
6	27	235.71	-5390.02	-3267.18	-52.13	1370.13	60.64	5.27
6	27	282.86	-5647.54	-2383.16	-193.99	1258.42	-9.75	1.67
6	27	330.00	-4423.44	-1979.02	-133.90	1089.40	-34.99	13.50
6	59	0.0	-4696.31	-3670.57	-296.10	-712.75	326.01	-29.85
6	59	47.14	-5018.57	-4386.10	-296.10	846.01	131.88	-41.18
6	59	94.29	-4529.67	-3698.66	91.86	2264.06	87.57	-18.40
6	59	141.43	-4133.23	-2526.93	152.09	3358.73	101.22	-5.20
6	59	188.57	-3838.14	-1299.38	41.05	4094.76	103.52	7.66
6	59	235.71	-3584.12	-229.56	-134.05	4500.08	66.48	20.84
6	59	282.86	-3204.26	614.50	-370.42	4594.23	-63.30	55.60
6	59	330.00	-3100.61	2023.07	-116.27	3976.75	-59.82	186.79
6	62	0.0	-2652.12	-2906.67	-93.64	-503.62	180.25	-23.87
6	62	47.14	-2852.27	-3458.84	-93.64	617.79	89.00	-33.22
6	62	94.29	-2414.29	-2899.82	112.46	1567.78	71.59	-15.91
6	62	141.43	-2031.07	-1946.94	116.30	2250.76	83.28	-7.13
6	62	188.57	-1681.83	-943.76	17.97	2641.58	84.52	0.23
6	62	235.71	-1294.74	-71.20	-107.52	2755.46	63.46	6.75
6	62	282.86	-766.29	588.52	-252.99	2619.15	-3.97	24.58
6	62	330.00	-952.12	1618.01	-179.29	2209.31	-33.74	96.29
6	65	0.0	-1.038e+04	-5481.02	-1070.17	-2814.75	545.35	-107.09
6	65	47.14	-1.065e+04	-6162.93	-1070.17	-1473.00	360.67	-104.52
6	65	94.29	-1.031e+04	-5826.54	-223.69	88.56	92.85	-73.93
6	65	141.43	-1.008e+04	-5034.39	106.03	1252.64	61.36	-40.79
6	65	188.57	-1.011e+04	-4105.91	77.06	2077.90	69.74	-21.93
6	65	235.71	-1.045e+04	-3227.51	-116.95	2706.22	32.73	-14.28
6	65	282.86	-1.140e+04	-2437.46	-708.10	3580.13	-166.75	42.74
6	65	330.00	-9586.62	-2309.97	367.18	3747.93	-198.58	125.64
6	68	0.0	3323.66	-3361.60	501.51	-1279.14	35.82	-7.30
6	68	47.14	3047.77	-4329.07	501.51	528.95	-144.71	-47.79
6	68	94.29	3432.23	-3791.41	341.73	1201.02	33.27	8.38
6	68	141.43	3745.00	-2698.21	150.83	1496.50	86.70	9.95
6	68	188.57	4060.13	-1519.43	22.10	1353.36	87.87	15.32
6	68	235.71	4486.52	-476.60	-22.78	799.17	88.39	20.32
6	68	282.86	5597.38	281.11	304.44	-333.80	169.32	-28.26
6	68	330.00	4702.94	1538.03	-691.81	-975.65	138.10	-45.68
6	70	0.0	-9998.96	-4722.27	-871.47	-2168.58	499.39	-64.54
6	70	47.14	-1.027e+04	-5689.74	-871.47	-360.49	320.31	-91.86
6	70	94.29	-9927.31	-5068.37	-120.44	1207.62	105.59	-58.17
6	70	141.43	-9675.10	-4078.19	154.99	2505.29	90.60	-32.32
6	70	188.57	-9568.62	-2928.98	89.74	3471.60	96.19	-15.69
6	70	235.71	-9735.74	-1778.06	-143.84	4247.15	55.14	-14.86
6	70	282.86	-1.044e+04	-551.12	-844.21	5189.45	-169.01	60.93
6	70	330.00	-9159.95	-193.59	350.83	5358.94	-225.48	193.79
6	81	0.0	-6250.78	-8077.02	-778.13	-4222.91	440.69	-165.01
6	81	47.14	-6524.03	-8758.93	-778.13	-2881.15	256.48	-141.11
6	81	94.29	-6197.25	-8750.36	-130.92	-1372.20	65.55	-88.52
6	81	141.43	-6018.96	-7865.00	101.83	-588.08	42.43	-49.17
6	81	188.57	-6321.16	-6792.14	64.13	-235.38	59.00	-28.03
6	81	235.71	-6690.56	-5884.14	-58.77	-330.59	39.39	-11.25
6	81	282.86	-7492.53	-5421.77	-214.89	-262.58	-32.76	-22.64
6	81	330.00	-5821.11	-4834.20	-44.65	-345.24	-49.40	-51.66
6	97	0.0	-7616.70	-4752.44	-767.31	-2337.86	442.52	-82.57
6	97	47.14	-7889.95	-5434.35	-767.31	-996.10	257.82	-87.33
6	97	94.29	-7546.98	-5047.49	-121.14	334.00	79.54	-54.80
6	97	141.43	-7311.89	-4237.75	105.25	1290.30	63.57	-28.90
6	97	188.57	-7285.74	-3321.85	61.55	1911.81	69.98	-13.15
6	97	235.71	-7484.66	-2487.19	-96.32	2312.04	40.12	-5.73
6	97	282.86	-8040.61	-1774.08	-501.82	2804.88	-104.19	31.02

Viale Duca Alessandro n. 11 – 43123 Parma
Cell. 335 1403156 – E mail ing.concari@gmail.com
Sito web: studioaire.it – P.IVA 02561480340

6	97	330.00	-6761.69	-1478.89	175.27	2820.38	-131.95	94.11
6	100	0.0	614.68	-2510.65	159.26	-948.69	134.71	-10.08
6	100	47.14	341.43	-3192.56	159.26	393.07	-49.98	-34.46
6	100	94.29	710.51	-2731.57	185.79	1045.84	35.96	3.95
6	100	141.43	1003.02	-1876.45	104.27	1401.80	68.09	7.71
6	100	188.57	1261.68	-1003.78	15.19	1414.62	67.82	13.90
6	100	235.71	1558.99	-270.36	-33.42	1117.76	61.79	19.48
6	100	282.86	2287.41	231.75	138.40	424.65	90.77	-5.68
6	100	330.00	1973.64	1002.08	-425.49	-60.78	74.29	-1.08
6	113	0.0	-5141.78	-6335.50	-585.59	-3167.14	378.97	-116.93
6	113	47.14	-5415.03	-7017.41	-585.59	-1825.38	194.53	-109.10
6	113	94.29	-5081.21	-6830.80	-65.14	-536.62	62.50	-63.59
6	113	141.43	-4877.20	-5953.91	103.02	180.29	51.82	-34.06
6	113	188.57	-5026.14	-4945.11	53.99	514.26	63.54	-16.84
6	113	235.71	-5248.39	-4098.74	-61.53	476.22	44.47	-3.54
6	113	282.86	-5718.47	-3580.06	-202.11	482.19	-22.92	-7.53
6	113	330.00	-4510.65	-2990.36	-73.24	342.10	-41.50	-11.16
6	122	0.0	-4280.48	-1611.07	-274.75	-306.58	280.66	10.44
6	122	47.14	-4553.74	-2292.98	-274.75	1035.18	99.41	-22.81
6	122	94.29	-4237.92	-1601.22	33.05	1858.25	67.08	-2.41
6	122	141.43	-4008.83	-791.62	106.09	2574.51	77.66	2.62
6	122	188.57	-3873.34	6.88	34.16	3109.36	75.99	10.69
6	122	235.71	-3703.97	709.62	-95.02	3428.06	50.09	10.12
6	122	282.86	-3639.16	1443.85	-396.87	3691.81	-59.01	49.00
6	122	330.00	-3412.40	1814.36	40.14	3566.91	-89.69	148.97
6	140	0.0	-3662.53	-4498.85	-353.63	-2343.78	323.58	-62.44
6	140	47.14	-3958.56	-5332.72	-353.63	-757.20	111.66	-81.91
6	140	94.29	-3628.55	-4949.72	25.78	326.01	57.84	-33.86
6	140	141.43	-3413.73	-4083.69	117.01	1009.01	66.90	-14.89
6	140	188.57	-3362.06	-3117.14	52.56	1297.77	71.81	-1.84
6	140	235.71	-3454.83	-2242.22	-51.83	1294.93	55.96	4.22
6	140	282.86	-3543.06	-1539.79	-164.21	1166.04	5.00	3.30
6	140	330.00	-2872.99	-1097.01	-146.56	1011.61	-26.71	18.94
6	143	0.0	-4127.83	-4361.77	-424.65	-2491.00	354.99	-64.15
6	143	47.14	-4446.71	-5178.70	-424.65	-922.60	114.24	-83.89
6	143	94.29	-4129.52	-4825.89	-4.63	150.67	50.67	-34.64
6	143	141.43	-3915.95	-4012.67	108.47	828.09	57.68	-15.37
6	143	188.57	-3868.46	-3108.61	55.62	1119.31	62.58	-1.91
6	143	235.71	-3991.09	-2294.81	-43.20	1136.79	45.60	4.57
6	143	282.86	-4142.19	-1640.98	-152.14	1053.15	-9.27	3.22
6	143	330.00	-3252.35	-1313.61	-99.52	905.80	-27.09	15.97
6	158	0.0	-3000.80	-2910.66	-171.66	-780.01	216.39	-28.45
6	158	47.14	-3225.97	-3465.70	-171.66	348.42	92.56	-38.53
6	158	94.29	-2812.23	-2953.26	77.90	1278.47	64.63	-17.48
6	158	141.43	-2457.43	-2067.02	106.18	1933.65	74.20	-7.54
6	158	188.57	-2156.95	-1139.02	21.88	2295.42	75.59	0.60
6	158	235.71	-1857.52	-339.20	-92.80	2395.41	55.25	7.15
6	158	282.86	-1453.78	261.83	-225.69	2281.60	-9.59	21.66
6	158	330.00	-1393.21	1093.02	-145.17	1921.70	-31.89	81.63
6	159	0.0	-3623.96	-2836.20	-241.09	-652.87	255.83	-24.91
6	159	47.14	-3875.49	-3387.98	-241.09	538.63	101.21	-34.01
6	159	94.29	-3500.86	-2873.80	62.42	1602.69	65.14	-15.02
6	159	141.43	-3196.84	-1992.24	112.85	2412.41	74.95	-4.58
6	159	188.57	-2973.05	-1070.19	31.33	2943.59	76.71	5.29
6	159	235.71	-2787.16	-269.73	-97.81	3223.43	49.50	14.95
6	159	282.86	-2513.34	357.46	-269.76	3277.02	-44.98	39.17
6	159	330.00	-2370.46	1354.45	-87.77	2830.70	-43.64	131.50
6	173	0.0	-3911.24	-3685.68	-354.26	-1759.33	314.97	-48.27
6	173	47.14	-4203.14	-4384.34	-354.26	-367.88	108.15	-63.56
6	173	94.29	-3861.38	-3972.33	17.94	676.40	55.13	-26.59
6	173	141.43	-3607.89	-3146.66	106.60	1383.46	62.77	-11.05
6	173	188.57	-3483.89	-2255.12	44.43	1750.37	66.24	0.77
6	173	235.71	-3476.24	-1468.21	-62.90	1856.48	45.83	8.25
6	173	282.86	-3452.82	-846.90	-191.08	1817.23	-21.92	16.09
6	173	330.00	-2841.13	-297.95	-92.67	1561.69	-32.35	56.75
6	174	0.0	-3548.24	-3774.57	-321.23	-1815.60	297.91	-50.00
6	174	47.14	-3827.82	-4481.34	-321.23	-438.51	105.15	-65.57
6	174	94.29	-3477.17	-4072.54	26.04	553.79	56.39	-27.27
6	174	141.43	-3221.85	-3246.51	104.35	1197.52	64.21	-11.61
6	174	188.57	-3095.97	-2353.92	40.65	1492.19	67.58	-0.30
6	174	235.71	-3075.71	-1568.63	-59.75	1519.28	50.59	5.90
6	174	282.86	-3029.30	-958.52	-170.68	1406.28	-3.36	9.30
6	174	330.00	-2476.70	-488.54	-126.21	1199.34	-27.28	35.69
6	176	0.0	-3302.25	-3438.04	-260.39	-1496.67	262.55	-43.34
6	176	47.14	-3558.97	-4085.88	-260.39	-233.62	98.35	-57.32
6	176	94.29	-3172.84	-3642.86	44.05	697.66	57.50	-24.74
6	176	141.43	-2857.87	-2799.54	101.91	1303.23	65.48	-11.38
6	176	188.57	-2633.00	-1899.38	31.75	1578.10	68.02	-1.73
6	176	235.71	-2467.23	-1115.56	-69.76	1588.17	51.20	3.81
6	176	282.86	-2249.10	-521.21	-178.28	1438.15	-0.05	8.76
6	176	330.00	-1853.14	25.19	-137.13	1193.41	-25.95	38.61
6	177	0.0	-3810.47	-3380.56	-317.55	-1391.71	295.14	-40.42
6	177	47.14	-4088.89	-4026.19	-317.55	-75.63	105.54	-53.59
6	177	94.29	-3735.65	-3581.91	31.35	966.80	58.03	-22.67
6	177	141.43	-3464.07	-2742.58	107.48	1700.32	66.22	-8.89
6	177	188.57	-3304.81	-1847.44	39.58	2115.22	69.07	2.21
6	177	235.71	-3235.45	-1063.19	-73.83	2273.81	46.61	10.33
6	177	282.86	-3127.05	-447.21	-214.60	2262.01	-29.06	23.28
6	177	330.00	-2664.75	235.66	-90.32	1946.67	-35.66	79.86
6	180	0.0	-3335.16	-3007.52	-294.67	-1389.07	271.61	-39.34
6	180	47.14	-3598.05	-3576.40	-294.67	-260.94	96.69	-51.16
6	180	94.29	-3223.91	-3160.36	16.89	577.24	51.98	-21.31
6	180	141.43	-2924.10	-2407.02	83.69	1113.50	57.49	-8.91
6	180	188.57	-2719.27	-1628.34	25.92	1344.94	59.08	0.26
6	180	235.71	-2582.56	-975.60	-60.21	1338.11	43.58	5.60
6	180	282.86	-2405.26	-503.17	-150.69	1195.56	-2.26	9.01
6	180	330.00	-1910.96	-147.57	-110.46	984.13	-23.13	31.24
6	181	0.0	-3843.38	-2950.05	-351.82	-1284.11	304.20	-36.43

Viale Duca Alessandro n. 11 – 43123 Parma
Cell. 335 1403156 – E mail ing.concari@gmail.com
Sito web: studioaire.it – P.IVA 02561480340

6	181	47.14	-4127.98	-3516.72	-351.82	-102.95	103.89	-47.43
6	181	94.29	-3786.71	-3099.41	4.19	846.38	52.50	-19.24
6	181	141.43	-3530.31	-2350.06	89.25	1510.58	58.23	-6.42
6	181	188.57	-3391.08	-1576.40	33.75	1882.06	60.14	4.21
6	181	235.71	-3350.78	-923.23	-64.28	2023.75	38.99	12.12
6	181	282.86	-3283.20	-429.18	-187.00	2019.42	-31.27	23.54
6	181	330.00	-2722.57	62.91	-63.65	1737.39	-32.84	72.49
6	182	0.0	-3480.39	-3038.94	-318.79	-1340.38	287.14	-38.16
6	182	47.14	-3752.66	-3613.71	-318.79	-173.58	100.88	-49.44
6	182	94.29	-3402.51	-3199.62	12.30	723.78	53.76	-19.91
6	182	141.43	-3144.26	-2449.91	87.00	1324.64	59.68	-6.98
6	182	188.57	-3003.16	-1675.20	29.96	1623.88	61.47	3.14
6	182	235.71	-2950.25	-1023.65	-61.12	1686.54	43.75	9.77
6	182	282.86	-2859.69	-540.80	-166.61	1608.47	-12.71	16.74
6	182	330.00	-2358.15	-127.68	-97.19	1375.04	-27.77	51.43
M_S			**N memb.**	**V memb.**	**V orto**	**M memb.**	**M orto**	**T**
			-1.140e+04	-8758.93	-1070.17	-4222.91	-225.48	-165.01
			5597.38	2023.07	501.51	5358.94	545.35	193.79

Macro	Tipo	Angolo 1-Z (gradi)
7	**Setto**	**0.0**

M_S	**Cmb**	**Z**	**N memb.**	**V memb.**	**V orto**	**M memb.**	**M orto**	**T**
		cm	daN	daN	daN	daN m	daN m	daN m
7	27	0.0	-1.187e+04	1714.13	1.317e+04	2102.77	-8123.90	-62.06
7	27	47.14	-1.274e+04	1973.58	1.317e+04	2433.88	-1732.82	-159.65
7	27	94.29	-1.232e+04	2288.23	7238.28	2551.49	1358.64	-150.96
7	27	141.43	-1.184e+04	2524.05	2934.28	2716.41	2485.05	-148.08
7	27	188.57	-1.112e+04	2706.00	228.49	3087.09	2468.35	-146.58
7	27	235.71	-1.009e+04	2827.22	-1369.59	3768.61	1808.43	-144.67
7	27	282.86	-8725.32	2822.25	-2162.24	4682.58	826.32	-132.43
7	27	330.00	-7724.15	2440.99	-2139.36	5487.04	-130.66	-79.99
7	30	0.0	-4565.77	828.44	1.033e+04	2155.99	-6326.57	-36.42
7	30	47.14	-5350.68	1004.52	1.033e+04	2315.48	-1304.81	-101.18
7	30	94.29	-5279.40	1228.48	5699.74	2385.65	1124.51	-98.27
7	30	141.43	-5191.53	1412.20	2318.77	2490.65	2012.51	-96.24
7	30	188.57	-4932.18	1565.99	177.96	2715.30	1998.16	-94.54
7	30	235.71	-4409.56	1669.68	-1113.65	3087.27	1463.53	-91.39
7	30	282.86	-3590.65	1642.31	-1816.53	3497.34	634.59	-74.35
7	30	330.00	-2878.74	986.99	-1697.88	4151.75	-130.83	-16.18
7	59	0.0	-2.425e+04	257.22	1.290e+04	3307.52	-7613.35	-10.68
7	59	47.14	-2.452e+04	497.65	1.290e+04	3047.42	-1395.57	-64.21
7	59	94.29	-2.296e+04	803.37	6996.96	2636.37	1595.96	-75.99
7	59	141.43	-2.123e+04	1027.72	2789.10	2204.82	2673.74	-76.13
7	59	188.57	-1.932e+04	1192.91	152.11	1827.18	2645.60	-76.19
7	59	235.71	-1.730e+04	1297.85	-1391.85	1623.06	2009.83	-79.71
7	59	282.86	-1.524e+04	1327.75	-2103.10	1693.10	1115.65	-86.65
7	59	330.00	-1.342e+04	1249.84	-2692.52	1979.10	-76.68	-86.12
7	65	0.0	-9483.61	1.118e+04	9966.41	-1.144e+04	-6165.90	-232.17
7	65	47.14	-9922.60	1.138e+04	9966.41	-1.148e+04	-1475.37	-224.08
7	65	94.29	-9503.40	1.118e+04	5473.88	-8916.71	881.94	-213.05
7	65	141.43	-8991.77	1.086e+04	2236.75	-6782.51	1801.94	-179.50
7	65	188.57	-8184.86	1.060e+04	180.79	-4576.59	1828.73	-185.47
7	65	235.71	-7971.16	1.065e+04	-1024.33	-1813.06	1348.38	-172.78
7	65	282.86	-6354.13	9485.39	-1729.11	4317.51	626.59	-184.38
7	65	330.00	-5349.18	1.268e+04	-1566.14	4463.84	-107.37	-170.83
7	77	0.0	-9605.08	9573.02	9971.50	-1.165e+04	-6164.90	-257.28
7	77	47.14	-1.004e+04	9769.07	9971.50	-1.169e+04	-1474.15	-256.23
7	77	94.29	-9675.72	9548.80	5479.01	-9432.51	879.88	-243.07
7	77	141.43	-9254.30	9293.93	2244.65	-7595.90	1748.91	-204.10
7	77	188.57	-8610.65	9091.19	192.96	-5681.42	1805.19	-203.72
7	77	235.71	-7749.49	9207.88	-990.90	-3370.69	1346.34	-203.26
7	77	282.86	-6682.25	8262.00	-1656.62	756.99	637.26	-230.68
7	77	330.00	-5820.33	1.104e+04	-1581.92	1037.78	-96.83	-278.66
7	86	0.0	-1.952e+04	968.84	1.596e+04	-1608.99	-9948.09	-65.66
7	86	47.14	-2.065e+04	1081.42	1.596e+04	-1681.46	-1643.10	-156.53
7	86	94.29	-2.006e+04	1342.58	9491.87	-1558.08	2325.97	-131.05
7	86	141.43	-1.915e+04	1446.77	4446.20	-1590.41	3857.18	-108.75
7	86	188.57	-1.798e+04	1584.73	992.87	-1634.41	4079.07	-102.21
7	86	235.71	-1.665e+04	1818.82	-1446.28	-1548.29	3439.81	-101.31
7	86	282.86	-1.536e+04	1790.81	-2909.23	-773.06	2104.43	-125.83
7	86	330.00	-1.351e+04	2870.30	-5069.22	-470.13	-236.90	-99.65
7	87	0.0	577.57	-496.15	1.088e+04	5929.97	-6424.06	-4.25
7	87	47.14	138.58	-300.10	1.088e+04	5887.43	-1727.83	-44.97
7	87	94.29	-292.22	-89.46	5865.45	5548.38	865.52	-67.34
7	87	141.43	-926.47	259.17	2393.13	5410.47	2017.31	-86.10
7	87	188.57	-1427.96	549.08	226.97	5500.67	2125.39	-90.38
7	87	235.71	-1560.07	655.86	-1067.80	5823.53	1608.49	-89.74
7	87	282.86	-1069.99	809.40	-2150.98	5793.11	750.54	-49.75
7	87	330.00	-1138.96	-910.58	-1763.13	6534.55	-102.45	-6.72
7	97	0.0	-1.087e+04	6952.14	9865.88	-5752.33	-6031.97	-145.88
7	97	47.14	-1.131e+04	7148.19	9865.88	-5794.87	-1340.91	-162.81
7	97	94.29	-1.076e+04	7109.49	5392.30	-4329.68	974.77	-159.59
7	97	141.43	-1.010e+04	6980.15	2174.58	-3118.56	1844.46	-138.15
7	97	188.57	-9209.28	6873.11	145.39	-1845.09	1846.37	-141.46
7	97	235.71	-8670.30	6949.30	-1040.06	-169.79	1359.01	-132.98
7	97	282.86	-7170.56	6159.11	-1676.36	3709.81	644.72	-137.66
7	97	330.00	-6129.29	7986.73	-1621.20	3921.54	-95.75	-117.68
7	109	0.0	-1.095e+04	6028.05	9869.47	-5918.70	-6031.09	-161.53
7	109	47.14	-1.139e+04	6224.10	9869.47	-5961.24	-1339.89	-183.13
7	109	94.29	-1.086e+04	6171.75	5395.44	-4671.60	973.42	-178.32
7	109	141.43	-1.027e+04	6075.75	2179.56	-3632.40	1809.69	-152.92

Viale Duca Alessandro n. 11 – 43123 Parma
Cell. 335 1403156 – E mail ing.concari@gmail.com
Sito web: studioaire.it – P.IVA 02561480340

7	109	188.57	-9490.59	5999.98	153.26	-2519.98	1829.78	-152.10
7	109	235.71	-8526.78	6111.17	-1017.43	-1134.31	1357.10	-151.32
7	109	282.86	-7377.59	5459.56	-1626.72	1440.43	651.71	-165.84
7	109	330.00	-6432.06	7026.78	-1631.14	1727.44	-88.77	-185.74
7	118	0.0	-2.080e+04	1120.79	8954.76	775.44	-5459.89	-27.38
7	118	47.14	-2.124e+04	1316.84	8954.76	732.90	-770.63	-84.60
7	118	94.29	-1.980e+04	1584.56	4880.04	694.49	1259.01	-81.60
7	118	141.43	-1.811e+04	1648.64	1878.96	546.68	1840.88	-68.42
7	118	188.57	-1.627e+04	1677.31	3.78	381.07	1703.36	-64.13
7	118	235.71	-1.442e+04	1740.55	-1058.29	287.24	1215.46	-64.23
7	118	282.86	-1.273e+04	1605.88	-1244.83	618.45	609.87	-79.77
7	118	330.00	-1.099e+04	2037.77	-1644.72	851.14	-68.15	-56.86
7	119	0.0	-4921.65	-113.63	1.044e+04	4660.74	-6189.25	-8.77
7	119	47.14	-5360.64	82.42	1.044e+04	4618.20	-1494.72	-53.63
7	119	94.29	-5299.54	292.18	5638.57	4359.58	966.90	-67.87
7	119	141.43	-5318.85	577.76	2273.17	4234.42	1976.97	-79.91
7	119	188.57	-5191.84	807.81	175.33	4285.75	2034.46	-82.80
7	119	235.71	-4770.35	900.15	-1066.34	4542.76	1525.15	-82.65
7	119	282.86	-3912.79	1000.55	-1936.04	4624.01	725.46	-55.75
7	119	330.00	-3512.10	-189.02	-1750.24	5236.55	-91.30	-18.64
7	142	0.0	-7244.00	817.13	9797.74	1889.18	-5945.13	-32.32
7	142	47.14	-7881.78	988.86	9797.74	2012.15	-1186.83	-91.60
7	142	94.29	-7524.25	1206.34	5348.80	2023.73	1093.17	-89.63
7	142	141.43	-7124.97	1378.46	2125.01	2053.95	1904.21	-87.86
7	142	188.57	-6564.66	1517.41	102.99	2184.88	1863.06	-86.53
7	142	235.71	-5785.26	1609.33	-1086.25	2459.14	1344.39	-84.69
7	142	282.86	-4774.92	1592.26	-1676.77	2808.31	583.78	-73.28
7	142	330.00	-3889.15	1102.57	-1561.46	3361.27	-108.78	-30.72
7	143	0.0	-9591.33	1248.69	9946.99	1582.59	-6106.90	-44.59
7	143	47.14	-1.022e+04	1443.39	9946.99	1809.99	-1282.00	-116.09
7	143	94.29	-9817.74	1680.43	5445.11	1874.31	1043.16	-110.29
7	143	141.43	-9359.42	1857.49	2187.85	1968.35	1881.72	-108.20
7	143	188.57	-8724.86	1993.37	146.07	2207.93	1857.95	-107.12
7	143	235.71	-7861.86	2083.30	-1050.58	2672.79	1353.11	-105.95
7	143	282.86	-6769.34	2080.45	-1627.79	3312.42	615.16	-97.77
7	143	330.00	-5937.43	1805.15	-1598.05	3895.40	-95.73	-61.30
7	159	0.0	-1.785e+04	277.42	9765.09	2385.75	-5766.53	-10.34
7	159	47.14	-1.807e+04	459.44	9765.09	2219.02	-1057.16	-52.46
7	159	94.29	-1.691e+04	690.52	5284.23	1930.90	1201.38	-60.31
7	159	141.43	-1.562e+04	859.94	2091.07	1627.29	2007.51	-60.23
7	159	188.57	-1.419e+04	984.64	95.15	1367.99	1976.12	-60.19
7	159	235.71	-1.267e+04	1063.72	-1065.42	1242.43	1487.37	-62.65
7	159	282.86	-1.111e+04	1084.12	-1588.37	1319.43	808.05	-67.25
7	159	330.00	-9734.97	1011.05	-1966.83	1556.78	-59.74	-65.39
7	172	0.0	-1.059e+04	535.43	9591.31	1999.98	-5732.27	-21.30
7	172	47.14	-1.106e+04	701.22	9591.31	1997.27	-1084.70	-70.34
7	172	94.29	-1.038e+04	914.39	5199.48	1886.89	1132.38	-72.48
7	172	141.43	-9634.40	1080.49	2040.45	1776.13	1911.70	-71.36
7	172	188.57	-8739.26	1211.64	66.50	1730.47	1860.76	-70.46
7	172	235.71	-7680.48	1297.18	-1082.39	1801.44	1351.82	-70.16
7	172	282.86	-6467.67	1291.97	-1623.87	1970.50	629.10	-64.58
7	172	330.00	-5362.43	926.29	-1636.40	2387.17	-91.18	-37.92
7	173	0.0	-1.256e+04	884.62	9718.79	1797.56	-5869.97	-31.12
7	173	47.14	-1.303e+04	1070.89	9718.79	1878.20	-1165.44	-90.25
7	173	94.29	-1.232e+04	1301.45	5281.52	1809.68	1090.09	-89.47
7	173	141.43	-1.152e+04	1472.14	2093.70	1750.75	1892.74	-88.12
7	173	188.57	-1.057e+04	1600.77	102.81	1794.36	1856.48	-87.43
7	173	235.71	-9439.32	1684.28	-1052.42	2022.20	1359.18	-87.66
7	173	282.86	-8159.65	1689.50	-1582.71	2429.63	655.58	-84.57
7	173	330.00	-7103.29	1493.20	-1667.45	2872.87	-80.20	-62.35
7	177	0.0	-1.421e+04	690.36	9682.41	1958.19	-5801.89	-24.27
7	177	47.14	-1.460e+04	874.10	9682.41	1960.00	-1120.47	-77.53
7	177	94.29	-1.374e+04	1103.47	5249.35	1821.00	1121.73	-79.48
7	177	141.43	-1.277e+04	1272.63	2074.34	1682.53	1917.89	-78.53
7	177	188.57	-1.166e+04	1399.03	92.63	1626.37	1880.11	-78.04
7	177	235.71	-1.040e+04	1480.36	-1055.39	1736.13	1386.03	-79.00
7	177	282.86	-9027.64	1490.24	-1574.82	2031.03	694.15	-78.46
7	177	330.00	-7862.80	1334.38	-1741.20	2405.14	-73.01	-63.17
7	180	0.0	-1.212e+04	504.53	8735.66	2200.80	-5168.77	-14.29
7	180	47.14	-1.248e+04	678.53	8735.66	2164.50	-939.18	-57.26
7	180	94.29	-1.158e+04	891.78	4639.79	2011.93	1038.53	-62.29
7	180	141.43	-1.060e+04	1045.55	1728.92	1852.33	1692.01	-61.63
7	180	188.57	-9483.17	1156.61	-55.42	1741.83	1594.21	-60.92
7	180	235.71	-8241.29	1220.28	-1039.94	1729.78	1104.67	-61.13
7	180	282.86	-6898.05	1199.26	-1408.65	1808.69	476.14	-57.20
7	180	330.00	-5702.70	839.35	-1284.09	2170.54	-67.56	-34.83
7	181	0.0	-1.410e+04	853.72	8863.14	1998.38	-5306.46	-24.11
7	181	47.14	-1.445e+04	1048.20	8863.14	2045.43	-1019.92	-77.17
7	181	94.29	-1.352e+04	1278.83	4721.83	1934.72	996.24	-79.28
7	181	141.43	-1.249e+04	1437.20	1782.17	1826.94	1673.05	-78.39
7	181	188.57	-1.131e+04	1545.75	-19.10	1805.72	1589.93	-77.89
7	181	235.71	-1.000e+04	1607.38	-1009.98	1950.55	1112.03	-78.63
7	181	282.86	-8590.02	1596.80	-1367.49	2267.82	502.62	-77.20
7	181	330.00	-7443.55	1406.26	-1315.13	2656.24	-56.58	-59.26

M_S	N memb.	V memb.	V orto	M memb.	M orto	T
	-2.452e+04	-910.58	-5069.22	-1.169e+04	-9948.09	-278.66
	577.57	1.268e+04	1.596e+04	6534.55	4079.07	-4.25

Macro	Tipo	Angolo 1-X (gradi)
3	**Guscio**	**0.0**

M_G	Cmb	Nodo	N max	N min	N 1	N 2	N 1-2	M max	M min	M 1	M 2 M 1-

Viale Duca Alessandro n. 11 – 43123 Parma
Cell. 335 1403156 – E mail ing.concari@gmail.com
Sito web: studioaire.it – P.IVA 02561480340

2

			daN/ m	daN/ m	daN/ m	daN/ m	daN/ m	daN	daN	daN	daN	daN
3	19	15	278.68	-2376.31	-1668.28	-429.35	-1174.10	-128.28	-526.25	-191.67	-462.86	-145.63
3	19	16	1054.89	-1215.49	-553.05	392.45	1032.07	14.72	-286.07	5.84	-277.19	50.91
3	19	17	552.79	-376.26	169.53	7.01	457.36	29.99	-362.31	-220.70	-111.62	-188.42
3	19	18	-17.88	-1298.69	-628.54	-688.03	-639.72	-51.32	-617.34	-398.04	-270.61	275.74
3	19	19	217.70	-2033.10	-817.23	-998.16	-1121.76	538.89	-788.53	-648.84	399.20	407.33
3	19	20	-15.98	-2645.03	-2411.39	-249.62	-748.10	1740.68	39.25	338.36	1441.56	647.65
3	19	21	-295.74	-1793.34	-483.52	-1605.57	495.94	110.63	-1332.75	-696.66	-525.46	716.60
3	19	22	1743.68	-2938.77	-604.95	-590.14	-2341.21	445.43	-670.16	-668.96	444.22	-36.66
3	19	23	709.02	-2977.23	-1112.00	-1156.21	-1842.99	1416.16	838.13	971.70	1282.60	-243.65
3	19	24	2576.71	-2720.74	-116.31	-27.72	-2648.35	326.47	-578.09	-435.70	184.08	-329.43
3	19	25	1383.94	-2945.86	24.24	-1586.16	-2009.59	1612.51	-19.14	853.73	739.63	-813.83
3	19	26	2434.19	-1362.75	410.28	661.17	-1894.32	303.51	-675.64	-182.68	-189.44	-489.56
3	19	27	1682.65	-3186.55	760.31	-2264.20	-1907.98	1247.78	-908.62	369.88	-30.73	-1059.43
3	19	28	1378.76	-2737.53	1002.90	-2361.68	-1185.69	-69.80	-1218.82	-170.84	-1117.78	-325.40
3	19	29	-1077.48	-3543.14	-2965.14	-1655.48	-1044.54	2256.41	788.34	1018.69	2026.05	-533.96
3	19	30	826.34	-1.009e+04	-8444.67	-822.92	3910.27	293.88	-1147.33	-850.86	-2.60	-582.57
3	19	31	-495.52	-3015.60	-1443.58	-2067.54	-1220.81	2154.56	1286.28	1566.03	1874.81	-405.76
3	19	32	583.52	-3268.98	-19.81	-2665.65	-1400.12	1772.03	639.60	1276.26	1135.38	-561.81
3	19	33	1389.87	-3743.93	992.45	-3346.51	-1371.98	947.23	-433.27	562.45	-48.49	-618.98
3	19	34	1975.79	-3760.29	1810.75	-3595.25	-958.88	-149.78	-1885.21	-164.43	-1870.57	-158.74
3	19	35	-1981.15	-4590.93	-4534.77	-2037.31	378.71	2586.81	1055.07	2214.75	1427.14	-656.86
3	19	36	-718.08	-8833.41	-8832.12	-719.37	102.37	2881.40	-373.28	2829.80	-321.68	-406.55
3	19	37	-1569.10	-2876.19	-1795.48	-2649.81	-494.62	2183.11	1533.91	1820.44	1896.58	-322.36
3	19	38	22.32	-3376.96	-170.26	-3184.38	-785.83	1490.30	985.99	1307.37	1168.92	-242.46
3	19	39	1266.24	-4031.47	1106.78	-3872.00	-905.19	538.00	-211.07	498.19	-171.26	-168.03
3	19	40	2367.53	-4163.36	2302.94	-4098.77	-646.28	-274.49	-2280.80	-274.52	-2280.77	-8.03
3	19	41	-2033.97	-4938.50	-4937.03	-2035.44	65.35	1902.68	1281.04	1801.70	1382.02	229.30
3	19	42	-928.68	-8171.86	-8170.53	-930.01	-98.38	2362.06	-336.55	2332.27	-306.76	281.98
3	19	43	-1805.52	-2807.72	-1861.80	-2751.44	230.72	1765.00	1305.11	1318.13	1751.98	-76.28
3	19	44	-557.42	-3058.69	-563.05	-3053.06	-118.55	1023.07	784.47	896.81	910.73	119.10
3	19	45	1138.68	-4023.54	1086.34	-3971.20	-517.18	274.92	-363.84	196.42	-285.35	209.71
3	19	46	2747.33	-4241.34	2732.35	-4226.36	-323.20	-406.94	-2428.18	-410.89	-2424.24	89.22
3	19	47	-1282.43	-3998.39	-3984.12	-1296.71	196.38	1524.53	-581.43	-493.71	1436.80	420.78
3	19	48	1576.51	-7950.12	-7530.77	1157.16	-1954.26	-143.26	-1508.49	-1428.01	-223.73	321.54
3	19	49	-983.63	-2801.00	-1655.28	-2129.35	877.23	1061.91	-295.34	-294.45	1061.02	34.76
3	19	50	-1073.64	-2636.91	-1080.32	-2630.23	101.99	410.21	-339.42	-294.18	364.97	178.51
3	19	51	1130.62	-3779.31	1128.88	-3777.57	-92.43	99.35	-502.89	-105.66	-297.89	285.37
3	19	52	2969.70	-4172.87	2968.24	-4171.41	-102.14	-498.87	-2392.06	-504.99	-2385.94	107.43
3	19	53	-345.43	-3308.96	-3307.81	-346.59	58.56	1966.71	203.82	206.03	1964.50	-62.35
3	19	54	-615.82	-1772.23	-1671.99	-716.06	-325.38	-34.85	-327.46	-231.36	-130.94	-137.42
3	19	55	-785.34	-2743.77	-1847.74	-1681.37	975.67	1669.50	376.46	376.48	1669.47	5.37
3	19	56	-328.38	-2563.63	-372.29	-2519.72	310.20	209.28	31.69	39.83	201.14	37.14
3	19	57	1064.29	-3436.61	1064.29	-3436.61	-1.69	-35.45	-519.04	-175.34	-379.15	219.27
3	19	58	2907.65	-4047.64	2907.50	-4047.50	-31.37	-509.26	-2240.50	-512.34	-2237.42	72.93
3	19	59	-558.88	-2510.98	-2357.10	-712.76	526.04	1872.66	527.70	551.30	1849.06	-176.59
3	19	60	-587.45	-3146.89	-2985.18	-749.15	622.67	86.51	-260.33	41.26	-215.08	-116.83
3	19	61	-481.21	-2645.68	-1619.83	-1507.06	1080.77	1633.69	543.74	543.74	1633.69	4.35e-02
3	19	62	-248.68	-2472.08	-451.63	-2269.13	640.35	211.49	-115.08	83.75	12.66	159.37
3	19	63	1131.49	-3211.75	1130.66	-3210.92	60.21	44.44	-505.48	-97.77	-363.28	

Viale Duca Alessandro n. 11 – 43123 Parma
Cell. 335 1403156 – E mail ing.concari@gmail.com
Sito web: studioaire.it – P.IVA 02561480340

240.79												
3	19	64	2767.52	-3772.70	2767.49	-3772.68	-13.15	-441.37	-1967.40	-442.26	-1966.51	
36.74												
3	19	65	-243.40	-2784.18	-1910.71	-1116.87	1206.79	1702.30	622.38	699.23	1625.45	-
277.64												
3	19	66	-673.99	-3764.21	-3480.99	-957.21	891.63	276.97	-317.32	199.85	-240.19	-
199.72												
3	19	67	150.69	-3079.02	-1335.63	-1592.71	1609.73	1411.58	626.52	637.95	1400.16	
94.02												
3	19	68	-8.28	-2531.90	-536.00	-2004.18	1026.30	312.88	-329.78	120.83	-137.74	
294.18												
3	19	69	1064.56	-2785.28	1044.28	-2765.00	278.69	180.48	-447.21	-22.22	-244.51	
293.50												
3	19	70	2599.18	-3177.37	2598.94	-3177.14	37.11	-328.98	-1529.02	-329.32	-1528.69	
20.03												
3	19	71	627.00	-3251.03	-1341.90	-1282.12	1938.79	1340.74	425.45	657.35	1108.85	-
398.09												
3	19	72	-894.36	-3105.50	-2838.46	-1161.40	720.52	372.26	-400.74	193.16	-221.65	-
326.14												
3	19	73	941.64	-3910.70	-1094.83	-1874.23	2394.67	1048.25	438.23	570.78	915.71	
251.57												
3	19	74	740.31	-2979.44	-522.38	-1716.75	1761.39	460.53	-480.24	123.25	-142.96	
451.16												
3	19	75	1055.97	-2269.76	833.33	-2047.12	831.19	371.57	-413.36	69.70	-111.49	
381.87												
3	19	76	2082.17	-1896.57	2066.88	-1881.28	246.13	-188.88	-871.71	-192.30	-868.29	
48.18												
3	19	77	390.87	-2908.54	-767.79	-1749.88	1574.93	426.89	-449.24	-411.84	389.49	-
177.12												
3	19	78	1065.84	-4194.12	-746.23	-2382.05	2499.56	338.67	-425.70	-400.19	313.16	
137.28												
3	19	79	935.60	-4126.69	-242.88	-2948.21	2139.39	101.38	-278.93	-141.94	-35.61	
182.57												
3	19	80	1929.56	-1416.46	673.81	-160.71	1620.14	137.34	-245.44	40.02	-148.12	
166.68												
3	28	15	175.75	-2423.94	-1692.29	-555.90	-1169.08	-121.16	-510.06	-173.42	-457.80	-
132.65												
3	28	16	900.43	-1329.06	-640.68	212.06	1029.98	34.30	-256.47	32.81	-254.97	
20.78												
3	28	17	619.71	-317.14	223.27	79.30	462.86	36.54	-365.71	-231.29	-97.87	-
189.74												
3	28	18	122.31	-1245.01	-522.86	-599.84	-682.58	-43.71	-656.83	-419.29	-281.25	
298.69												
3	28	19	158.41	-2131.94	-902.75	-1070.78	-1142.09	568.84	-813.20	-682.21	437.85	
404.82												
3	28	20	86.71	-2869.49	-2603.60	-179.18	-845.77	1825.73	137.30	408.28	1554.76	
619.76												
3	28	21	-227.82	-1844.72	-460.77	-1611.77	567.79	120.39	-1353.76	-699.02	-534.35	
732.46												
3	28	22	1770.05	-3138.58	-664.02	-704.52	-2454.23	466.67	-693.05	-689.63	463.25	-
62.88												
3	28	23	822.19	-3217.45	-1235.10	-1160.17	-2019.47	1519.07	850.36	1040.77	1328.66	-
301.78												
3	28	24	2604.26	-2962.29	-150.72	-207.32	-2783.13	335.17	-598.59	-436.54	173.11	-
353.64												
3	28	25	1518.18	-3135.53	-12.02	-1605.33	-2186.23	1655.45	-69.29	875.46	710.70	-
858.43												
3	28	26	2388.91	-1595.56	381.72	411.62	-1992.18	306.33	-680.55	-168.03	-206.19	-
493.07												
3	28	27	1789.95	-3221.50	809.78	-2241.33	-1987.79	1216.67	-951.87	355.58	-90.79	-
1061.06												
3	28	28	1515.05	-2568.81	1226.90	-2280.67	-1045.81	-68.47	-1182.95	-168.61	-1082.81	-
318.71												
3	28	29	-979.56	-3950.63	-3289.17	-1641.01	-1236.00	2428.98	841.26	1123.27	2146.98	-
606.81												
3	28	30	927.46	-1.071e+04	-9003.91	-782.98	4121.52	373.38	-1168.33	-813.41	18.46	-
649.01												
3	28	31	-384.27	-3275.76	-1629.84	-2030.18	-1431.82	2246.20	1319.19	1648.99	1916.40	-
443.80												
3	28	32	706.17	-3340.43	-44.35	-2589.91	-1572.82	1774.85	601.57	1303.86	1072.56	-
575.13												
3	28	33	1587.38	-3641.80	1165.69	-3220.11	-1423.82	902.26	-491.14	552.78	-141.66	-
604.01												
3	28	34	2358.19	-3551.74	2246.26	-3439.82	-805.56	-139.65	-1813.51	-153.39	-1799.77	-
151.02												
3	28	35	-2051.07	-5062.18	-5042.12	-2071.14	244.98	2741.59	1101.98	2352.54	1491.03	-
697.52												
3	28	36	-707.91	-9691.09	-9689.19	-709.80	130.39	3089.73	-403.06	3036.40	-349.73	-
428.29												
3	28	37	-1584.75	-3057.38	-2021.48	-2620.65	-672.61	2227.01	1562.38	1882.24	1907.14	-
332.08												
3	28	38	97.63	-3334.44	-169.22	-3067.59	-919.04	1449.50	933.22	1310.48	1072.24	-
229.01												
3	28	39	1551.21	-3852.71	1384.64	-3686.15	-934.01	497.72	-307.57	473.81	-283.65	-
136.70												
3	28	40	2994.96	-3934.16	2958.88	-3898.08	-498.65	-264.36	-2180.90	-264.37	-2180.89	4.16
3	28	41	-2132.42	-5544.92	-5540.94	-2136.40	-116.43	1992.33	1304.54	1858.92	1437.96	
271.96												
3	28	42	-908.03	-9270.94	-9270.19	-908.78	-78.84	2490.12	-365.55	2454.55	-329.98	
316.71												
3	28	43	-2072.14	-2776.45	-2099.53	-2749.06	136.16	1740.20	1309.87	1317.85	1732.22	-
58.03												
3	28	44	-539.89	-2916.51	-552.68	-2903.72	-173.89	973.63	656.17	845.22	784.57	
155.81												
3	28	45	1484.12	-3794.39	1432.92	-3743.18	-517.35	236.01	-499.04	143.15	-406.18	
244.20												
3	28	46	3564.32	-4002.05	3558.52	-3996.24	-209.47	-402.15	-2308.94	-407.58	-2303.50	
101.68												

Viale Duca Alessandro n. 11 – 43123 Parma
Cell. 335 1403156 – E mail ing.concari@gmail.com
Sito web: studioaire.it – P.IVA 02561480340

3	28	47	-1445.44	-4591.96	-4590.65	-1446.75	64.13	1649.02	-671.72	-576.32	1553.62
460.75											
3	28	48	1697.90	-9443.67	-8939.20	1193.42	-2316.50	-130.35	-1696.79	-1612.28	-214.86
353.89											
3	28	49	-960.53	-2882.90	-1737.45	-2105.99	943.35	962.10	-419.54	-415.00	957.55
79.13											
3	28	50	-1140.56	-2374.92	-1147.03	-2368.45	89.15	308.06	-455.32	-397.79	250.53
201.52											
3	28	51	1519.59	-3529.53	1518.81	-3528.75	-62.56	30.58	-623.46	-170.20	-422.68
301.67											
3	28	52	3856.38	-3931.14	3856.13	-3930.89	-44.21	-496.34	-2263.80	-504.04	-2256.11
116.37											
3	28	53	-216.21	-3734.69	-3734.00	-216.90	-49.24	2032.50	157.26	158.95	2030.80 -
56.30											
3	28	54	-399.69	-2366.68	-2128.12	-638.25	-642.13	4.74	-358.78	-265.16	-88.88 -
158.96											
3	28	55	-743.24	-2849.97	-2019.38	-1573.82	1029.54	1626.29	334.75	336.15	1624.89
42.48											
3	28	56	-189.42	-2414.21	-254.63	-2349.00	375.28	149.93	-11.16	4.09	134.67
47.16											
3	28	57	1449.78	-3178.22	1449.50	-3177.95	35.82	-107.88	-636.91	-228.65	-516.14
222.05											
3	28	58	3733.98	-3811.04	3733.79	-3810.85	-37.49	-504.48	-2114.78	-508.33	-2110.93
78.67											
3	28	59	-536.00	-2714.86	-2628.33	-622.53	425.49	1901.42	517.81	537.91	1881.31 -
165.58											
3	28	60	-658.40	-3489.16	-3435.87	-711.69	384.72	90.08	-231.69	37.76	-179.38 -
118.73											
3	28	61	-369.74	-2709.70	-1702.95	-1376.49	1158.54	1588.24	512.79	513.38	1587.65
25.07											
3	28	62	-17.26	-2376.17	-287.15	-2106.29	750.87	195.51	-156.63	58.74	-19.86
171.63											
3	28	63	1484.82	-2987.32	1481.58	-2984.08	120.41	-24.23	-630.33	-146.46	-508.10
243.19											
3	28	64	3436.97	-3551.77	3436.24	-3551.04	-71.39	-436.65	-1853.57	-437.88	-1852.34
41.69											
3	28	65	-287.85	-2821.57	-2064.71	-1044.71	1159.67	1707.26	623.02	687.62	1642.66 -
256.65											
3	28	66	-780.25	-3977.18	-3825.41	-932.02	679.83	278.23	-287.99	200.31	-210.07 -
195.05											
3	28	67	307.86	-3122.63	-1343.68	-1471.10	1714.06	1370.46	585.04	603.62	1351.88
119.34											
3	28	68	291.38	-2505.59	-340.57	-1873.63	1169.70	301.94	-360.82	89.95	-148.83
309.13											
3	28	69	1334.26	-2607.79	1300.70	-2574.23	362.18	93.75	-568.65	-83.79	-391.12
293.40											
3	28	70	3046.25	-2984.46	3045.77	-2983.99	-53.50	-334.37	-1436.07	-334.78	-1435.65
21.28											
3	28	71	673.88	-3237.74	-1384.47	-1179.40	1953.12	1312.38	447.47	644.71	1115.14 -
362.89											
3	28	72	-988.87	-3176.49	-3029.27	-1136.09	548.08	370.23	-375.48	194.38	-199.62 -
316.56											
3	28	73	1146.18	-3941.78	-1067.62	-1727.98	2522.46	1034.08	371.52	531.61	874.00
283.62											
3	28	74	1023.54	-2989.72	-364.43	-1601.74	1908.88	462.63	-516.98	87.89	-142.24
476.10											
3	28	75	1223.62	-2197.80	950.44	-1924.62	927.38	272.33	-510.57	-8.41	-229.82
375.47											
3	28	76	2271.23	-1740.39	2267.29	-1736.45	125.67	-205.93	-808.42	-207.82	-806.54
33.67											
3	28	77	600.61	-2790.43	-747.98	-1441.84	1659.65	417.29	-449.81	-419.53	387.01 -
159.19											
3	28	78	1278.45	-4084.35	-708.78	-2097.12	2589.99	328.34	-425.61	-394.00	296.73
151.11											
3	28	79	1001.33	-4032.09	-256.03	-2774.74	2178.96	118.89	-283.38	-126.94	-37.56
196.11											
3	28	80	1963.91	-1408.61	749.17	-193.88	1618.99	154.29	-261.51	74.76	-181.98
163.53											
3	75	15	-704.68	-1829.81	-1326.23	-1208.26	-559.47	239.58	-605.60	-37.10	-328.92 -
396.60											
3	75	16	2409.00	-852.92	222.75	1333.34	1533.52	-46.67	-332.03	-97.32	-281.38 -
109.03											
3	75	17	1232.29	-370.01	-359.51	1221.79	-129.31	-82.88	-267.53	-226.67	-123.74
76.65											
3	75	18	200.06	-2269.15	-291.90	-1777.19	-986.27	304.33	-480.56	-112.91	-63.33
391.66											
3	75	19	-459.37	-3333.53	-879.80	-2913.09	-1015.69	767.89	-236.85	-9.32	540.36
420.53											
3	75	20	-319.40	-2719.25	-2023.33	-1015.32	-1088.94	1706.51	837.75	1129.14	1415.13
410.17											
3	75	21	519.57	-1678.72	363.51	-1522.66	-564.54	390.85	-394.02	102.03	-105.19
378.51											
3	75	22	-146.31	-4466.89	-1094.10	-3519.10	-1787.93	699.67	71.00	76.38	694.28 -
57.94											
3	75	23	25.07	-3119.79	-1192.08	-1902.63	-1531.77	1861.63	1379.21	1725.97	1514.88 -
216.89											
3	75	24	606.19	-4065.15	-577.37	-2881.59	-2031.75	757.93	-156.56	140.72	460.65 -
428.35											
3	75	25	499.39	-3078.55	-227.85	-2351.30	-1439.85	2020.73	584.96	1532.13	1073.56 -
680.29											
3	75	26	803.06	-2174.67	-52.27	-1319.34	-1347.36	723.28	-563.53	122.42	37.33 -
642.00											
3	75	27	476.73	-2898.79	219.16	-2641.22	-896.15	1562.29	-398.53	861.93	301.83 -
939.56											
3	75	28	196.78	-2605.16	179.04	-2587.42	-222.20	283.40	-979.44	119.29	-815.33 -
424.63											
3	75	29	-256.59	-3884.40	-3114.10	-1026.89	-1483.63	2435.68	1465.68	2065.73	1835.64 -
471.16											

Viale Duca Alessandro n. 11 – 43123 Parma
Cell. 335 1403156 – E mail ing.concari@gmail.com
Sito web: studioaire.it – P.IVA 02561480340

3	75	30	288.14	-4863.79	-4384.39	-191.25	1496.66	1149.84	-81.66	757.91	310.26	-573.63
3	75	31	-531.20	-3173.08	-1996.58	-1707.69	-1313.02	2640.98	1884.49	2520.34	2005.13	-276.96
3	75	32	-254.78	-2833.38	-646.23	-2441.92	-925.29	2276.27	1327.33	2150.36	1453.23	-321.90
3	75	33	418.04	-2972.75	414.29	-2969.00	-112.61	1267.43	243.02	1166.34	344.11	-305.51
3	75	34	887.90	-3141.07	837.09	-3090.25	449.60	187.64	-1365.82	187.64	-1365.82	-1.82
3	75	35	-1224.54	-4704.98	-4584.18	-1345.34	-637.05	2581.85	1125.96	2486.39	1221.42	-360.37
3	75	36	-491.77	-7061.61	-7012.30	-541.08	-567.05	3018.18	-46.15	3002.32	-30.30	-219.84
3	75	37	-1147.91	-3185.80	-2344.07	-1989.65	-1003.42	2261.20	1699.06	2216.00	1744.26	-152.86
3	75	38	-604.37	-2705.81	-722.44	-2587.73	-483.92	1780.84	1219.38	1758.71	1241.51	109.25
3	75	39	680.09	-3149.72	645.60	-3115.23	361.81	958.94	-18.19	826.96	113.79	333.98
3	75	40	2251.70	-3315.85	2040.60	-3104.75	1063.38	68.94	-1742.27	-17.89	-1655.44	386.95
3	75	41	-1685.31	-5743.40	-5536.65	-1892.06	-892.34	1350.71	831.01	1117.89	1063.83	258.44
3	75	42	-1369.65	-1.062e+04	-1.056e+04	-1426.86	-725.31	1445.01	-264.62	1373.19	-192.80	342.98
3	75	43	-1914.46	-2621.22	-2085.13	-2450.55	-302.48	1263.68	827.78	828.74	1262.71	20.49
3	75	44	-1346.87	-2532.75	-1352.57	-2527.05	82.00	958.97	20.32	502.02	477.27	469.16
3	75	45	1275.84	-3023.80	1144.53	-2892.49	739.83	700.46	-838.40	88.94	-226.88	753.05
3	75	46	3735.49	-3265.55	3409.83	-2939.89	1474.41	-128.24	-1920.73	-317.16	-1731.81	550.41
3	75	47	-737.01	-4835.99	-4065.93	-1507.07	-1601.08	1034.87	-1138.76	-1130.49	1026.60	133.81
3	75	48	1417.55	-1.100e+04	-9766.41	179.60	-3720.92	34.41	-1872.52	-1871.72	33.61	39.08
3	75	49	-939.95	-2337.90	-1452.23	-1825.61	673.58	236.98	-1134.37	-1114.49	217.09	163.92
3	75	50	-555.59	-1784.18	-791.48	-1548.29	483.91	-523.67	-1427.87	-1241.40	-710.15	365.84
3	75	51	2016.06	-2837.00	1786.84	-2607.77	1029.52	143.91	-1035.91	-539.00	-353.00	582.54
3	75	52	4591.37	-3151.62	4151.99	-2712.23	1791.40	-354.86	-1759.42	-508.20	-1606.08	438.02
3	75	53	141.48	-3923.69	-3642.36	-139.85	-1031.76	1059.73	-628.01	-598.58	1030.30	-220.91
3	75	54	988.52	-3892.94	-2936.12	31.70	-1937.83	76.21	-900.57	-742.60	-81.76	-359.65
3	75	55	-533.71	-1531.28	-880.15	-1184.84	474.95	673.49	-573.25	-549.38	649.62	170.84
3	75	56	1703.69	-2034.42	1517.90	-1848.63	812.39	-454.27	-801.35	-737.52	-518.10	134.46
3	75	57	2409.59	-2744.44	2080.41	-2415.26	1260.26	-367.70	-808.90	-610.59	-566.01	219.47
3	75	58	4783.50	-2970.32	4325.06	-2511.89	1828.79	-542.28	-1718.30	-575.97	-1684.62	196.15
3	75	59	184.86	-2668.01	-2345.58	-137.57	-903.26	801.91	-141.75	-111.86	772.02	-165.27
3	75	60	393.14	-4042.95	-3465.05	-184.75	-1493.19	-33.18	-408.56	-217.03	-224.70	-187.65
3	75	61	6.05	-1319.33	-444.94	-868.34	627.96	523.84	-202.45	-192.80	514.18	83.17
3	75	62	2323.64	-1874.16	1911.68	-1462.20	1248.84	-268.55	-585.06	-372.74	-480.88	148.73
3	75	63	2803.63	-2601.10	2369.48	-2166.95	1469.00	-311.55	-592.26	-375.34	-528.46	117.64
3	75	64	4388.45	-2896.67	3917.93	-2426.15	1790.63	-510.73	-1594.10	-511.34	-1593.49	25.64
3	75	65	-171.50	-1602.01	-1534.33	-239.18	-303.71	593.65	24.36	42.48	575.54	-99.93
3	75	66	-24.43	-3768.69	-3447.64	-345.48	-1048.35	-40.30	-301.41	-61.44	-280.28	-71.22
3	75	67	708.47	-1346.51	-57.08	-580.96	993.54	398.76	-101.14	-75.55	373.17	110.17
3	75	68	2552.42	-1898.79	1597.03	-943.40	1827.53	-175.97	-550.90	-263.92	-462.95	158.87
3	75	69	2802.86	-2346.22	2169.27	-1712.63	1691.44	-229.42	-462.08	-283.40	-408.10	98.21
3	75	70	3616.11	-2475.50	3149.72	-2009.10	1619.75	-416.66	-1323.71	-422.25	-1318.12	-71.01
3	75	71	523.12	-1285.26	-970.44	208.30	685.71	393.19	82.82	121.06	354.96	-102.00
3	75	72	24.45	-2574.29	-2494.32	-55.52	-448.80	-26.51	-244.47	-31.27	-239.71	-31.86
3	75	73	1692.00	-1583.92	2.56	105.52	1637.15	309.72	-55.20	47.10	207.43	163.91
3	75	74	2264.72	-1268.99	866.93	128.79	1727.88	3.46	-476.40	-124.17	-348.77	212.03
3	75	75	2585.79	-1524.07	1602.56	-540.84	1753.34	-53.72	-338.31	-135.00	-257.03	128.55
3	75	76	2651.99	-1433.98	2035.04	-817.03	1462.95	-249.74	-838.86	-274.22	-814.38	-117.57
3	75	77	1500.36	-974.20	-503.01	1029.17	971.58	72.21	-396.68	-393.42	68.95	38.99
3	75	78	3083.56	-904.67	320.40	1858.49	1839.86	-36.57	-398.11	-388.39	-46.29	58.48

Viale Duca Alessandro n. 11 – 43123 Parma
Cell. 335 1403156 – E mail ing.concari@gmail.com
Sito web: studioaire.it – P.IVA 02561480340

3	75	79	3247.04	-605.87	938.83	1702.33	1888.25	-149.04	-261.95	-180.35	-230.65	50.54
3	75	80	3555.23	-173.46	1347.71	2034.07	1832.49	-97.57	-226.10	-99.09	-224.59	13.86
3	86	15	523.16	-2648.17	-2435.37	310.37	-793.45	17.89	-283.12	6.54	-271.77	57.33
3	86	16	841.86	-1877.61	-1767.23	731.49	536.64	156.52	-120.87	156.50	-120.85	-2.44
3	86	17	1369.57	314.69	1366.44	317.82	-57.36	-44.51	-336.16	-245.98	-134.68	-134.79
3	86	18	282.97	148.72	183.75	247.94	-58.96	-208.44	-367.78	-286.58	-289.64	79.65
3	86	19	1390.77	-959.00	144.16	287.61	-1172.69	301.81	-637.50	-545.13	209.44	279.70
3	86	20	293.58	-1741.10	-1429.92	-17.60	-732.34	1083.83	-67.52	99.03	917.27	405.00
3	86	21	-163.67	-2586.25	-1203.64	-1546.28	1199.11	-46.07	-1099.74	-482.75	-663.06	519.06
3	86	22	2609.50	-1766.07	172.47	670.95	-2173.54	181.94	-536.78	-523.12	168.28	98.13
3	86	23	1014.88	-2208.06	-344.05	-849.13	-1591.56	731.49	338.46	453.82	616.13	-178.97
3	86	24	3145.71	-1517.09	331.04	1297.57	-2280.76	36.09	-174.68	-170.19	31.60	-30.43
3	86	25	1513.80	-2131.41	570.15	-1187.76	-1596.66	883.21	-164.99	413.77	304.46	-521.24
3	86	26	2963.43	-326.94	679.13	1957.36	-1515.97	198.96	-299.34	127.39	-227.76	-174.77
3	86	27	1911.53	-2778.58	1104.33	-1971.37	-1770.40	509.94	-719.89	93.87	-303.82	-581.88
3	86	28	1131.80	-2287.52	943.82	-2099.54	-779.38	-206.27	-937.41	-206.27	-937.41	0.60
3	86	29	-618.44	-2852.03	-1528.54	-1941.92	-1097.50	1358.36	108.98	262.61	1204.73	-410.29
3	86	30	958.55	-9588.71	-7594.40	-1035.75	4130.04	-305.02	-1278.70	-1144.15	-439.57	-336.02
3	86	31	15.25	-2540.37	-295.81	-2229.31	-835.58	1089.92	458.87	629.69	919.10	-280.39
3	86	32	940.46	-3131.64	669.46	-2860.64	-1014.94	919.07	176.19	555.43	539.84	-371.36
3	86	33	1422.10	-3969.85	1103.91	-3651.66	-1270.60	290.36	-630.44	152.30	-492.38	-328.74
3	86	34	1121.16	-4171.19	1016.24	-4066.27	-737.74	-272.22	-1767.11	-273.39	-1765.94	41.81
3	86	35	-1909.49	-3219.94	-2862.16	-2267.26	583.82	1590.95	497.90	1214.43	874.42	-519.42
3	86	36	-193.66	-5360.77	-5334.06	-220.37	370.58	1650.34	-669.35	1643.37	-662.38	-126.91
3	86	37	-435.86	-2979.41	-455.31	-2959.95	-221.62	1247.42	704.24	904.75	1046.91	-262.12
3	86	38	593.32	-3773.33	540.99	-3721.00	-475.14	787.02	321.39	632.16	476.24	-219.38
3	86	39	1134.80	-4604.96	1008.32	-4478.48	-842.60	110.35	-723.51	91.75	-704.91	-123.14
3	86	40	904.29	-5196.31	817.78	-5109.79	-721.32	-383.28	-2302.87	-384.60	-2301.55	50.39
3	86	41	-2149.59	-2554.09	-2553.82	-2149.86	10.47	1233.72	901.58	1193.59	941.71	108.25
3	86	42	-258.70	-3570.56	-3566.07	-263.19	121.83	1610.07	-519.55	1609.03	-518.52	46.86
3	86	43	-708.80	-3136.95	-722.63	-3123.13	182.69	1054.68	775.17	839.04	990.81	-117.36
3	86	44	355.54	-3819.74	354.47	-3818.67	-66.87	452.16	365.82	446.43	371.54	-21.48
3	86	45	859.25	-4960.16	830.79	-4931.69	-406.02	-57.81	-833.07	-62.60	-828.27	60.77
3	86	46	681.96	-5554.50	648.82	-5521.36	-453.44	-478.09	-2597.76	-478.90	-2596.95	41.44
3	86	47	-1157.77	-3403.70	-2896.62	-1664.85	939.01	1249.73	-357.55	-258.09	1150.27	387.26
3	86	48	1374.32	-5628.82	-5469.04	1214.54	-1045.67	-618.30	-1215.51	-1156.47	-677.34	178.25
3	86	49	101.64	-2793.27	-11.61	-2680.02	561.27	487.15	-316.34	-316.13	486.93	-13.08
3	86	50	513.01	-4062.19	510.96	-4060.14	96.93	572.35	-109.05	-97.00	560.30	89.81
3	86	51	578.89	-5023.71	578.49	-5023.31	47.27	-164.48	-964.82	-174.51	-954.79	89.03
3	86	52	560.07	-5647.21	554.50	-5641.65	-185.82	-521.93	-2623.00	-522.00	-2622.92	12.61
3	86	53	-668.42	-1829.57	-1781.15	-716.83	-232.10	1472.78	274.09	274.09	1472.78	2.10
3	86	54	-570.18	-1686.04	-1095.02	-1161.19	-556.95	61.32	-340.70	30.42	-309.80	-107.09
3	86	55	-911.75	-2555.05	-1028.79	-2438.02	422.64	971.64	377.28	377.46	971.46	-10.33
3	86	56	67.17	-3504.46	62.90	-3500.19	123.44	140.71	81.34	94.07	127.98	-24.36
3	86	57	543.00	-4754.04	519.15	-4730.19	354.59	-188.37	-935.19	-198.01	-925.55	84.29
3	86	58	498.83	-5518.65	498.56	-5518.38	40.72	-503.21	-2467.10	-504.00	-2466.31	-39.31
3	86	59	-1104.40	-1440.19	-1401.64	-1142.95	107.04	1392.04	481.50	486.23	1387.32	-65.42
3	86	60	-921.07	-2508.22	-2417.28	-1012.01	368.88	41.70	-404.25	40.56	-403.11	-22.53
3	86	61	-749.26	-2104.27	-783.73	-2069.80	213.36	1044.91	406.19	406.42	1044.69	11.99
3	86	62	-493.68	-3268.25	-541.94	-3219.98	362.73	136.07	-101.38	76.25	-41.56	103.09

Viale Duca Alessandro n. 11 – 43123 Parma
Cell. 335 1403156 – E mail ing.concari@gmail.com
Sito web: studioaire.it – P.IVA 02561480340

3	86	63	667.40	-4272.79	614.24	-4219.64	509.66	-138.09	-810.97	-154.47	-794.59	103.69
3	86	64	678.26	-5045.46	671.27	-5038.47	199.88	-420.73	-2113.67	-426.19	-2108.21	-95.98
3	86	65	-702.93	-1934.19	-1268.53	-1368.59	613.60	1276.54	505.81	548.34	1234.00	-175.99
3	86	66	-892.40	-3120.07	-3021.14	-991.32	458.90	141.36	-418.17	124.86	-401.68	-94.65
3	86	67	-369.35	-2086.68	-654.21	-1801.82	638.79	939.01	488.63	504.38	923.25	82.74
3	86	68	-407.81	-2499.66	-461.76	-2445.70	331.60	263.27	-241.60	150.52	-128.85	210.26
3	86	69	815.65	-3412.43	739.32	-3336.10	562.94	4.11	-595.85	-31.84	-559.90	142.40
3	86	70	1040.61	-4082.07	1024.57	-4066.03	286.19	-276.96	-1531.07	-288.80	-1519.22	-121.29
3	86	71	518.88	-2556.03	-816.64	-1220.51	1524.14	1028.67	422.14	577.56	873.25	-264.78
3	86	72	-1418.61	-2845.57	-2835.24	-1428.94	-120.96	241.82	-388.61	165.67	-312.47	-205.44
3	86	73	640.51	-2457.94	-579.10	-1238.33	1513.76	775.43	328.37	488.54	615.26	214.36
3	86	74	504.65	-2208.41	-315.40	-1388.36	1245.94	383.02	-368.86	150.08	-135.92	347.68
3	86	75	1025.04	-2288.68	766.38	-2030.01	888.96	154.22	-438.98	30.74	-315.50	240.83
3	86	76	1294.26	-1985.18	1290.09	-1981.02	-116.81	-144.60	-728.54	-155.34	-717.81	-78.43
3	86	77	985.83	-2009.92	-170.97	-853.12	1458.53	315.91	-419.07	-391.19	288.03	-140.41
3	86	78	1373.68	-2808.63	-439.12	-995.83	2072.55	262.42	-303.17	-299.07	258.32	48.02
3	86	79	1249.66	-1928.27	-551.31	-127.30	1574.76	40.12	-61.17	10.08	-31.13	46.26
3	86	80	2203.47	-147.57	539.74	1516.17	1069.34	295.20	-202.23	284.01	-191.04	73.74
3	107	15	-331.98	-1687.65	-1222.43	-797.21	-643.63	107.26	-517.75	-83.63	-326.86	-287.87
3	107	16	1791.90	-802.50	27.76	961.63	1210.25	-50.86	-253.19	-62.67	-241.38	-47.43
3	107	17	720.47	-203.21	-202.96	720.22	15.07	-101.87	-189.40	-189.33	-101.94	2.51
3	107	18	63.14	-1711.97	-356.96	-1291.87	-754.48	168.73	-448.94	-166.10	-114.11	307.74
3	107	19	-327.63	-2513.75	-732.67	-2108.71	-849.36	600.72	-346.09	-169.16	423.79	369.07
3	107	20	-282.86	-2226.92	-1781.90	-727.88	-816.77	1482.40	526.20	795.81	1212.79	430.25
3	107	21	202.12	-1405.63	151.86	-1355.37	-279.80	258.88	-563.93	-96.24	-208.81	407.53
3	107	22	180.42	-3379.02	-821.06	-2377.55	-1600.54	537.18	-132.82	-131.28	535.64	-32.10
3	107	23	91.15	-2589.36	-996.42	-1501.79	-1316.22	1467.78	1120.36	1330.85	1257.29	-169.77
3	107	24	857.32	-3073.16	-394.55	-1821.29	-1831.19	536.00	-237.45	-40.46	339.01	-336.98
3	107	25	537.70	-2582.81	-152.62	-1892.49	-1295.23	1665.10	410.42	1195.94	879.58	-607.07
3	107	26	1003.72	-1590.27	48.67	-635.22	-1251.11	520.25	-522.05	10.51	-12.30	-521.02
3	107	27	592.15	-2576.01	270.64	-2254.50	-956.68	1321.57	-436.51	661.52	223.54	-851.32
3	107	28	285.84	-2344.57	203.18	-2261.91	-458.89	166.13	-931.12	40.04	-805.03	-349.94
3	107	29	-431.65	-3184.29	-2579.48	-1036.46	-1139.75	1981.72	1173.71	1545.37	1610.07	-402.71
3	107	30	361.13	-5129.83	-4460.74	-307.95	1796.17	721.11	-252.67	296.27	172.17	-482.92
3	107	31	-533.53	-2628.53	-1564.31	-1597.76	-1047.37	2128.84	1555.68	1973.37	1711.15	-254.83
3	107	32	-93.80	-2571.26	-432.10	-2232.95	-850.70	1856.40	1058.31	1688.25	1226.47	-325.47
3	107	33	438.36	-2801.86	396.82	-2760.33	-364.52	1044.48	117.16	900.19	261.45	-336.13
3	107	34	698.61	-2903.30	698.41	-2903.10	26.98	86.21	-1342.38	85.14	-1341.31	-39.14
3	107	35	-1281.48	-3858.17	-3820.65	-1319.00	-308.67	2202.92	972.30	2080.13	1095.10	-368.83
3	107	36	-487.34	-6197.50	-6179.57	-505.26	-319.42	2548.41	-117.24	2530.09	-98.92	-220.20
3	107	37	-1166.59	-2604.04	-1858.38	-1912.26	-718.22	1918.03	1480.48	1841.62	1556.89	-166.12
3	107	38	-423.18	-2564.78	-528.88	-2459.07	-463.89	1451.12	1103.59	1450.25	1104.47	17.42
3	107	39	531.95	-2989.79	531.86	-2989.70	18.04	722.93	36.73	670.74	88.92	181.91
3	107	40	1590.26	-3097.64	1536.13	-3043.50	500.85	-35.19	-1659.27	-72.07	-1622.39	241.97
3	107	41	-1578.50	-4605.44	-4498.73	-1685.21	-558.21	1269.14	832.17	1113.56	987.74	209.23
3	107	42	-1063.23	-8282.72	-8252.53	-1093.42	-465.90	1433.50	-238.84	1385.56	-190.91	279.04
3	107	43	-1681.22	-2273.70	-1716.19	-2238.73	-139.62	1217.49	840.81	841.42	1216.88	-15.10
3	107	44	-1014.76	-2385.58	-1015.13	-2385.20	22.69	881.83	227.29	561.38	547.74	327.20
3	107	45	856.10	-2907.28	828.08	-2879.26	323.51	543.83	-581.85	123.59	-161.60	544.48
3	107	46	2639.92	-3096.20	2510.67	-2966.94	851.31	-205.71	-1790.94	-297.05	-1699.59	

Viale Duca Alessandro n. 11 – 43123 Parma
Cell. 335 1403156 – E mail ing.concari@gmail.com
Sito web: studioaire.it – P.IVA 02561480340

369.39												
3	107	47	-904.23	-3738.58	-3348.67	-1294.14	-976.27	971.08	-865.71	-851.18	956.55	
162.72												
3	107	48	1210.39	-8570.66	-7732.78	372.52	-2737.38	-43.03	-1535.29	-1529.73	-48.59	
90.96												
3	107	49	-844.33	-2149.60	-1272.11	-1721.82	612.68	403.84	-803.56	-794.65	394.93	
103.34												
3	107	50	-709.27	-1748.87	-790.76	-1667.38	279.42	-276.94	-1011.23	-896.94	-391.23	
266.19												
3	107	51	1364.51	-2748.63	1267.86	-2651.97	623.05	152.97	-759.80	-363.56	-243.27	
452.40												
3	107	52	3257.18	-3009.25	3052.56	-2804.63	1113.72	-370.87	-1680.94	-445.13	-1606.68	
302.94												
3	107	53	-65.64	-3126.08	-2978.72	-213.01	-655.20	1111.11	-348.36	-330.61	1093.36	-
159.98												
3	107	54	477.84	-2776.33	-2130.06	-168.44	-1298.24	23.68	-635.14	-515.51	-95.95	-
253.97												
3	107	55	-547.35	-1587.07	-942.18	-1192.24	504.60	816.75	-278.49	-268.29	806.55	
105.21												
3	107	56	1007.83	-1981.57	898.77	-1872.51	560.49	-265.55	-512.34	-470.76	-307.13	
92.37												
3	107	57	1599.05	-2587.45	1446.31	-2434.71	784.93	-227.29	-609.46	-428.29	-408.46	
190.83												
3	107	58	3391.05	-2871.53	3168.89	-2649.36	1158.43	-472.17	-1630.99	-489.51	-1613.65	
140.68												
3	107	59	-157.48	-2086.97	-1962.37	-282.08	-474.22	932.10	33.33	57.69	907.74	-
145.94												
3	107	60	-63.77	-3023.27	-2783.17	-303.87	-808.04	-13.44	-306.54	-125.92	-194.06	-
142.53												
3	107	61	-156.48	-1416.71	-616.28	-956.91	606.66	713.51	1.96	5.79	709.68	
52.06												
3	107	62	1368.17	-1827.83	1090.43	-1550.10	900.28	-129.43	-405.29	-218.44	-316.27	
128.96												
3	107	63	1878.14	-2436.03	1667.53	-2225.41	929.66	-175.41	-461.46	-251.37	-385.51	
126.32												
3	107	64	3139.87	-2757.93	2910.05	-2528.10	1141.33	-426.94	-1487.85	-427.43	-1487.36	
22.78												
3	107	65	-429.12	-1363.89	-1361.25	-431.76	49.62	763.37	162.66	191.40	734.63	-
128.23												
3	107	66	-366.14	-2989.13	-2902.79	-452.49	-467.99	38.86	-262.19	7.98	-231.31	-
91.33												
3	107	67	417.28	-1524.26	-323.93	-783.04	943.24	584.79	91.91	108.90	567.79	
89.94												
3	107	68	1523.05	-1805.44	852.72	-1135.10	1334.87	-39.68	-426.88	-132.35	-334.21	
165.20												
3	107	69	1885.12	-2158.48	1549.13	-1822.49	1116.12	-85.72	-361.49	-166.75	-280.46	
125.62												
3	107	70	2668.10	-2350.24	2436.75	-2118.89	1052.37	-337.04	-1208.40	-339.03	-1206.41	-
41.57												
3	107	71	366.50	-1452.97	-897.84	-188.64	837.78	556.03	150.39	229.44	476.97	-
160.68												
3	107	72	-317.83	-2201.13	-2192.65	-326.31	-126.10	61.59	-237.41	24.35	-200.18	-
98.73												
3	107	73	1207.70	-1846.18	-242.75	-395.72	1525.02	441.52	78.44	170.11	349.85	
157.74												
3	107	74	1505.14	-1463.55	399.96	-358.37	1435.10	105.73	-405.82	-41.29	-258.81	
231.50												
3	107	75	1791.05	-1485.15	1181.20	-875.30	1275.17	71.44	-278.79	-47.52	-159.83	
165.87												
3	107	76	2011.00	-1377.12	1677.18	-1043.30	1009.75	-203.62	-732.87	-210.56	-725.93	-
60.21												
3	107	77	880.74	-1146.19	-482.27	216.82	951.28	133.73	-338.14	-337.15	132.75	-
21.56												
3	107	78	2021.36	-1424.78	17.78	578.80	1700.08	57.91	-344.18	-333.09	46.82	
65.87												
3	107	79	2111.75	-1178.06	524.07	409.62	1643.91	-79.32	-220.81	-144.99	-155.14	
70.56												
3	107	80	2624.65	-377.44	986.47	1260.73	1494.77	-39.00	-184.72	-56.27	-167.45	
47.11												
3	125	15	1177.54	-1575.45	-328.56	-69.35	-1370.38	-183.58	-468.62	-218.74	-433.46	-
93.72												
3	125	16	924.80	-923.29	78.89	-77.37	920.74	11.89	-287.66	-24.09	-251.68	
97.39												
3	125	17	342.44	-1288.61	-408.01	-538.15	812.93	196.94	-244.48	-79.32	31.77	-
213.61												
3	125	18	184.13	-1299.55	-917.64	-197.78	-648.67	-2.10	-490.93	-363.38	-129.65	
214.67												
3	125	19	667.53	-2024.87	-1067.72	-289.63	-1288.76	363.93	-656.55	-592.11	299.49	
248.21												
3	125	20	209.91	-2580.96	-2328.27	-42.79	-800.86	1239.28	-61.75	98.91	1078.62	
428.03												
3	125	21	-710.45	-1484.09	-1331.58	-862.96	307.78	137.46	-1048.24	-689.20	-221.59	
544.80												
3	125	22	2319.18	-2628.93	-534.25	224.50	-2444.80	322.30	-620.98	-599.81	301.13	-
139.71												
3	125	23	1186.63	-2794.45	-979.25	-628.58	-1982.80	1068.11	427.33	563.45	931.99	-
262.09												
3	125	24	2930.79	-2479.28	64.61	386.90	-2700.23	217.76	-622.94	-451.92	46.73	-
338.42												
3	125	25	1809.97	-2647.78	129.85	-967.66	-2160.27	1084.67	-240.39	452.23	392.05	-
661.85												
3	125	26	2652.34	-1255.23	653.07	744.05	-1953.26	123.45	-613.21	-263.03	-226.73	-
367.89												
3	125	27	1988.37	-2530.37	1012.85	-1554.86	-1859.16	785.75	-799.66	143.94	-157.85	-
778.21												
3	125	28	2136.03	-2134.89	1631.35	-1630.20	-1378.68	-146.26	-1052.43	-212.95	-985.75	-
236.60												
3	125	29	-966.24	-3227.50	-3041.94	-1151.80	-620.62	1764.64	481.90	660.30	1586.24	-

Viale Duca Alessandro n. 11 – 43123 Parma
Cell. 335 1403156 – E mail ing.concari@gmail.com
Sito web: studioaire.it – P.IVA 02561480340

3	125	30	121.53	-9154.75	-8240.66	-792.55	2764.74	457.76	-890.74	-671.36	238.38	-443.87
3	125	31	-96.40	-2698.15	-1260.01	-1534.54	-1293.61	1629.72	760.58	997.89	1392.42	-497.70
3	125	32	1021.15	-2681.02	244.08	-1903.96	-1507.65	1148.11	156.22	681.65	622.68	-387.22
3	125	33	1879.00	-2858.97	1445.47	-2425.43	-1366.06	536.40	-570.05	197.21	-230.86	-495.07
3	125	34	3112.98	-2662.89	2922.28	-2472.19	-1032.03	-235.72	-1608.10	-261.03	-1582.79	-510.14
3	125	35	-1496.82	-4288.58	-4266.85	-1518.55	245.35	1965.23	751.56	1603.74	1113.05	-184.64
3	125	36	-988.35	-9650.82	-9646.09	-993.09	202.48	2188.83	-129.50	2085.49	-26.15	-555.03
3	125	37	-1280.72	-2383.71	-1598.31	-2066.13	-499.43	1617.41	1022.41	1249.44	1390.38	-478.44
3	125	38	446.01	-2588.47	207.52	-2349.98	-816.59	975.52	460.72	755.88	680.37	-289.03
3	125	39	1879.57	-3018.60	1716.81	-2855.84	-877.92	294.46	-385.06	214.04	-304.65	-254.62
3	125	40	3578.25	-2840.23	3501.44	-2763.43	-697.92	-300.91	-1887.83	-312.76	-1875.98	-219.49
3	125	41	-1487.04	-4920.57	-4905.29	-1502.31	228.51	1523.03	992.80	1447.21	1068.63	-136.61
3	125	42	-879.87	-8456.01	-8452.17	-883.72	170.67	1988.90	-78.16	1949.17	-38.43	185.62
3	125	43	-1437.94	-2102.07	-1537.30	-2002.70	236.89	1359.96	1011.85	1019.04	1352.77	-283.84
3	125	44	53.41	-2244.87	52.17	-2243.63	-53.31	699.56	581.86	680.25	601.17	-49.50
3	125	45	1741.96	-2953.27	1687.13	-2898.43	-504.45	110.58	-323.80	108.38	-321.60	43.59
3	125	46	3808.99	-2873.23	3788.15	-2852.39	-372.59	-356.37	-1944.53	-360.37	-1940.52	30.82
3	125	47	-776.74	-3874.28	-3866.78	-784.25	152.30	1312.15	-211.28	-122.36	1223.23	-79.65
3	125	48	1092.22	-7153.19	-6930.73	869.76	-1335.95	369.15	-887.10	-740.54	222.58	357.15
3	125	49	-889.56	-2385.29	-1740.03	-1534.82	740.79	868.60	-47.66	-46.07	867.02	403.29
3	125	50	-727.43	-1783.13	-751.02	-1759.54	156.03	177.70	-122.12	-92.28	147.86	38.09
3	125	51	1663.30	-2642.22	1661.46	-2640.38	-89.00	46.85	-294.82	-26.79	-221.17	89.76
3	125	52	3881.10	-2812.59	3874.81	-2806.29	-205.16	-401.20	-1941.46	-401.51	-1941.15	140.50
3	125	53	-173.83	-3406.36	-3371.15	-209.05	335.56	1635.43	287.07	287.51	1634.99	-21.89
3	125	54	-292.30	-2192.94	-2192.90	-292.34	8.71	221.65	-95.47	-92.68	218.87	24.37
3	125	55	-411.65	-2472.75	-1729.96	-1154.44	989.56	1457.32	461.24	461.29	1457.26	-29.59
3	125	56	-277.35	-1851.45	-358.58	-1770.23	348.23	207.30	173.62	183.33	197.59	7.42
3	125	57	1475.77	-2349.46	1473.98	-2347.67	-82.75	33.83	-341.04	-46.43	-260.78	15.26
3	125	58	3637.25	-2756.32	3633.15	-2752.22	-161.85	-385.49	-1761.64	-386.12	-1761.01	153.78
3	125	59	-171.71	-2704.09	-2385.53	-490.27	839.78	1579.42	514.48	526.20	1567.70	29.50
3	125	60	-317.67	-3319.04	-3138.90	-497.81	712.89	241.66	68.75	141.40	169.02	-111.11
3	125	61	-170.42	-2604.16	-1653.63	-1120.94	1187.36	1433.69	567.20	567.30	1433.59	-85.34
3	125	62	73.79	-1946.40	-283.53	-1589.08	770.83	236.47	-37.60	143.95	54.93	9.15
3	125	63	1337.38	-2276.97	1335.45	-2275.04	83.62	78.16	-394.01	-37.67	-278.18	129.61
3	125	64	3305.06	-2572.22	3300.74	-2567.90	-159.23	-338.07	-1541.15	-340.91	-1538.31	203.17
3	125	65	130.67	-2841.72	-1895.88	-815.18	1384.48	1451.51	601.81	657.89	1395.44	58.37
3	125	66	-333.27	-3775.62	-3330.24	-778.65	1155.33	402.59	-10.11	267.97	124.51	-210.96
3	125	67	354.74	-2977.44	-1380.53	-1242.17	1664.65	1249.47	590.20	604.66	1235.01	-193.48
3	125	68	259.30	-2203.30	-432.90	-1511.10	1107.01	319.61	-256.12	134.72	-71.23	96.56
3	125	69	1112.42	-2044.87	1092.98	-2025.43	246.98	162.74	-393.42	-24.24	-206.44	268.82
3	125	70	2873.55	-2201.99	2872.28	-2200.72	-80.43	-268.96	-1223.79	-274.02	-1218.72	262.73
3	125	71	657.22	-3070.92	-1291.53	-1122.17	1862.14	1098.73	390.04	545.22	943.54	69.38
3	125	72	-426.13	-2993.76	-2499.98	-919.92	1011.94	458.81	-186.26	220.59	51.96	-293.08
3	125	73	860.65	-3706.51	-1107.07	-1738.80	2261.63	922.50	353.75	470.87	805.38	-311.32
3	125	74	876.62	-2864.85	-405.01	-1583.22	1775.56	417.05	-406.80	97.57	-87.32	229.99
3	125	75	1092.11	-1835.44	809.26	-1552.59	864.90	314.30	-358.40	51.83	-95.93	401.42
3	125	76	2009.63	-1600.55	1948.49	-1539.41	465.81	-142.97	-730.39	-156.60	-716.76	328.13
3	125	77	420.03	-3036.51	-820.64	-1795.84	1658.06	408.15	-241.63	-203.96	370.47	88.43
3	125	78	740.84	-4394.30	-929.44	-2724.03	2405.67	363.14	-279.17	-229.54	313.52	-151.86
3	125	79	917.84	-4116.60	-171.05	-3027.72	2072.74	187.96	-292.89	-99.41	-5.52	171.50

Viale Duca Alessandro n. 11 – 43123 Parma
Cell. 335 1403156 – E mail ing.concari@gmail.com
Sito web: studioaire.it – P.IVA 02561480340

235.80												
3	125	80	1418.40	-1684.75	558.78	-825.13	1388.73	140.72	-256.73	-0.44	-115.57	
190.20												
3	139	15	223.58	-1762.16	-1234.42	-304.15	-877.18	-96.78	-395.10	-146.34	-345.54	-
111.03												
3	139	16	808.02	-887.50	-394.45	314.97	769.98	8.93	-215.32	1.05	-207.44	
41.30												
3	139	17	391.54	-282.04	116.57	-7.07	331.07	21.04	-269.21	-163.19	-84.98	-
139.76												
3	139	18	-40.45	-973.03	-484.48	-529.00	-465.76	-39.90	-456.22	-294.06	-202.06	
203.02												
3	139	19	136.88	-1492.20	-602.40	-752.92	-811.06	398.12	-585.98	-479.89	292.03	
305.20												
3	139	20	-39.89	-1928.52	-1765.29	-203.12	-530.70	1289.50	21.42	250.96	1059.96	
488.24												
3	139	21	-217.60	-1327.96	-348.00	-1197.56	357.48	81.69	-988.72	-514.56	-392.47	
531.72												
3	139	22	1250.86	-2148.17	-448.55	-448.76	-1699.52	329.52	-498.28	-497.65	328.90	-
22.71												
3	139	23	483.21	-2172.86	-817.41	-872.25	-1327.75	1043.87	633.05	724.49	952.43	-
170.90												
3	139	24	1867.91	-1983.66	-90.29	-25.46	-1925.51	242.83	-430.04	-327.65	140.45	-
241.68												
3	139	25	978.08	-2160.95	11.50	-1194.37	-1449.09	1201.58	2.16	643.13	560.61	-
598.29												
3	139	26	1779.47	-978.30	299.26	501.91	-1375.16	226.22	-503.82	-141.23	-136.37	-
365.01												
3	139	27	1203.78	-2366.38	544.02	-1706.62	-1385.70	941.77	-663.87	285.40	-7.50	-
789.35												
3	139	28	969.39	-2078.81	679.81	-1789.23	-893.78	-48.44	-913.23	-124.21	-837.47	-
244.50												
3	139	29	-816.28	-2576.41	-2161.89	-1230.80	-746.85	1658.47	591.62	757.30	1492.78	-
386.40												
3	139	30	609.14	-7381.33	-6162.07	-610.12	2873.30	209.58	-839.86	-623.67	-6.61	-
424.43												
3	139	31	-398.15	-2208.64	-1058.57	-1548.22	-871.51	1597.20	965.93	1168.77	1394.36	-
294.79												
3	139	32	395.45	-2427.25	-26.52	-2005.28	-1006.49	1327.27	494.41	960.45	861.24	-
413.46												
3	139	33	978.57	-2809.95	693.16	-2524.54	-999.92	718.90	-302.30	430.44	-13.84	-
459.74												
3	139	34	1366.76	-2841.79	1239.11	-2714.14	-721.74	-108.14	-1411.44	-119.01	-1400.56	-
118.56												
3	139	35	-1462.33	-3351.19	-3305.37	-1508.14	290.58	1910.41	783.09	1639.10	1054.40	-
481.92												
3	139	36	-532.49	-6426.44	-6425.46	-533.47	76.02	2124.46	-273.75	2086.74	-236.03	-
298.40												
3	139	37	-1168.44	-2127.32	-1316.92	-1978.83	-346.89	1623.78	1146.16	1357.41	1412.53	-
237.21												
3	139	38	-10.76	-2526.97	-144.90	-2392.84	-565.27	1120.41	751.96	984.37	888.00	-
177.81												
3	139	39	877.99	-3034.12	761.85	-2917.98	-663.97	411.65	-132.08	382.82	-103.25	-
121.84												
3	139	40	1632.46	-3139.64	1582.59	-3089.78	-485.27	-201.44	-1706.48	-201.45	-1706.46	-
4.82												
3	139	41	-1508.55	-3598.72	-3597.32	-1509.95	54.14	1402.74	949.58	1330.63	1021.68	
165.76												
3	139	42	-687.91	-5928.39	-5927.37	-688.93	-73.20	1738.21	-246.99	1716.49	-225.27	
206.50												
3	139	43	-1323.42	-2098.69	-1365.15	-2056.96	174.95	1316.07	969.77	980.69	1305.14	-
60.53												
3	139	44	-437.09	-2299.28	-440.89	-2295.48	-84.06	774.17	595.28	677.91	691.55	
89.18												
3	139	45	778.90	-3032.32	739.25	-2992.67	-386.69	219.48	-253.96	155.27	-189.75	
162.10												
3	139	46	1909.20	-3194.51	1897.85	-3183.16	-240.46	-301.24	-1815.38	-304.36	-1812.26	
68.61												
3	139	47	-956.67	-2891.99	-2881.80	-966.85	140.05	1114.86	-434.61	-372.07	1052.31	
304.97												
3	139	48	1156.86	-5774.37	-5467.72	850.21	-1425.30	-112.54	-1114.48	-1056.78	-170.23	
233.41												
3	139	49	-741.63	-2081.50	-1222.16	-1600.98	642.60	796.13	-222.21	-221.78	795.70	
20.95												
3	139	50	-815.89	-1985.57	-819.33	-1982.13	63.38	296.00	-262.49	-230.05	263.56	
130.63												
3	139	51	777.76	-2850.23	776.34	-2848.80	-71.92	88.91	-363.67	-76.11	-198.65	
217.84												
3	139	52	2083.54	-3140.68	2082.54	-3139.68	-72.09	-371.51	-1786.84	-376.26	-1782.09	
81.85												
3	139	53	-276.27	-2406.43	-2405.72	-276.98	38.89	1452.44	150.43	152.22	1450.66	-
48.18												
3	139	54	-463.08	-1256.20	-1180.15	-539.13	-233.51	-32.52	-243.60	-171.49	-104.63	-
100.11												
3	139	55	-595.43	-2021.32	-1349.62	-1267.13	711.75	1243.37	275.19	275.19	1243.37	1.32
3	139	56	-246.48	-1938.00	-275.02	-1909.46	217.85	146.14	16.79	22.77	140.16	
27.15												
3	139	57	732.91	-2592.84	732.90	-2592.83	-7.00	-19.55	-371.70	-129.67	-261.58	
163.25												
3	139	58	2049.04	-3047.15	2048.98	-3047.09	-17.80	-380.13	-1673.40	-382.45	-1671.08	
54.76												
3	139	59	-427.84	-1824.91	-1712.40	-540.34	380.16	1386.15	390.98	408.60	1368.54	-
131.23												
3	139	60	-436.43	-2273.98	-2150.97	-559.44	459.25	62.24	-197.35	29.70	-164.81	-
85.96												
3	139	61	-381.48	-1945.04	-1186.69	-1139.84	781.43	1216.45	403.91	403.91	1216.44	-
1.30												
3	139	62	-207.75	-1855.06	-344.88	-1717.92	455.08	151.68	-89.91	60.31	1.47	
117.16												

Viale Duca Alessandro n. 11 – 43123 Parma
Cell. 335 1403156 – E mail ing.concari@gmail.com
Sito web: studioaire.it – P.IVA 02561480340

3	139	63	792.43	-2425.68	792.03	-2425.28	36.02	40.20	-358.54	-68.17	-250.18	177.39
3	139	64	1958.19	-2844.06	1958.19	-2844.06	-3.26	-328.47	-1470.65	-329.10	-1470.02	26.68
3	139	65	-194.96	-2033.74	-1392.56	-836.14	876.29	1262.23	462.11	519.82	1204.52	-206.99
3	139	66	-499.64	-2739.11	-2526.01	-712.74	657.13	204.08	-239.30	147.32	-182.55	-148.13
3	139	67	77.44	-2261.06	-983.76	-1199.86	1164.25	1052.31	468.94	477.06	1044.19	68.33
3	139	68	-48.96	-1880.22	-415.56	-1513.62	732.76	229.75	-247.61	91.47	-109.33	216.54
3	139	69	754.20	-2104.79	741.24	-2091.83	192.03	144.52	-314.26	-8.31	-161.43	216.24
3	139	70	1852.82	-2402.13	1852.51	-2401.83	35.95	-242.78	-1144.77	-243.01	-1144.55	14.34
3	139	71	438.91	-2383.33	-985.20	-959.23	1411.06	997.55	313.76	489.30	822.01	-298.69
3	139	72	-663.25	-2270.85	-2069.37	-864.73	532.27	275.32	-301.11	142.02	-167.81	-243.04
3	139	73	656.92	-2872.22	-810.73	-1404.57	1739.41	780.85	332.17	428.78	684.24	184.43
3	139	74	498.49	-2194.08	-404.92	-1290.68	1271.35	339.36	-354.95	95.28	-110.86	331.50
3	139	75	756.07	-1697.98	603.40	-1545.31	592.75	287.76	-291.12	62.83	-66.20	282.16
3	139	76	1501.72	-1446.09	1488.81	-1433.18	194.66	-137.10	-654.54	-139.75	-651.88	36.96
3	139	77	254.45	-2139.72	-569.13	-1316.15	1137.32	316.85	-334.33	-305.71	288.23	-133.48
3	139	78	750.18	-3089.51	-555.61	-1783.72	1818.99	251.84	-317.12	-298.67	233.39	100.79
3	139	79	671.91	-3045.42	-177.60	-2195.91	1560.85	71.69	-207.32	-107.65	-27.98	133.70
3	139	80	1408.13	-1033.09	491.28	-116.24	1182.21	98.64	-179.63	24.25	-105.23	123.15
3	144	15	154.84	-1793.80	-1250.43	-388.52	-873.83	-92.24	-384.10	-134.17	-342.17	-102.37
3	144	16	704.93	-963.09	-452.87	194.71	768.60	21.13	-194.73	19.03	-192.63	21.22
3	144	17	436.09	-242.57	152.40	41.13	334.74	25.32	-271.39	-170.25	-75.81	-140.64
3	144	18	53.01	-937.25	-414.03	-470.21	-494.33	-34.82	-482.55	-308.22	-209.15	218.31
3	144	19	97.29	-1558.03	-659.42	-801.33	-824.61	417.92	-602.26	-502.14	317.80	303.52
3	144	20	28.54	-2078.13	-1893.43	-156.16	-595.81	1345.84	87.16	297.57	1135.42	469.65
3	144	21	-173.07	-1361.46	-332.84	-1201.69	405.38	88.21	-1002.74	-516.14	-398.39	542.29
3	144	22	1268.49	-2281.42	-487.93	-525.00	-1774.86	343.47	-513.33	-511.44	341.58	-40.20
3	144	23	558.28	-2332.64	-899.47	-874.88	-1445.41	1111.90	641.78	770.54	983.14	-209.65
3	144	24	1886.22	-2144.64	-113.23	-145.19	-2015.37	248.41	-443.49	-328.21	133.13	-257.82
3	144	25	1066.90	-2286.73	-12.68	-1207.15	-1566.85	1230.17	-31.23	657.61	541.33	-628.02
3	144	26	1748.55	-1132.78	280.23	335.54	-1440.40	227.94	-506.93	-131.47	-147.53	-367.35
3	144	27	1274.99	-2389.36	577.01	-1691.38	-1438.91	920.97	-692.64	275.87	-47.54	-790.44
3	144	28	1058.53	-1964.61	829.14	-1735.22	-800.52	-47.56	-889.31	-122.72	-814.15	-240.04
3	144	29	-751.08	-2847.99	-2377.92	-1221.15	-874.49	1773.33	627.08	827.02	1573.40	-434.97
3	144	30	676.34	-7794.73	-6534.90	-583.49	3014.13	262.53	-853.82	-598.71	7.42	-468.73
3	144	31	-326.62	-2379.44	-1182.75	-1523.31	-1012.19	1658.19	987.97	1224.07	1422.09	-320.15
3	144	32	474.91	-2472.58	-42.88	-1954.79	-1121.63	1328.91	469.30	978.85	819.36	-422.34
3	144	33	1110.08	-2741.69	808.65	-2440.27	-1034.48	688.58	-340.54	423.99	-75.95	-449.76
3	144	34	1620.18	-2701.24	1529.46	-2610.52	-619.53	-101.38	-1363.64	-111.66	-1353.36	-113.42
3	144	35	-1511.66	-3662.64	-3643.61	-1530.70	201.43	2013.62	814.33	1730.95	1097.00	-509.02
3	144	36	-525.70	-6998.23	-6996.84	-527.09	94.69	2263.36	-293.60	2224.48	-254.73	-312.89
3	144	37	-1186.99	-2239.99	-1467.59	-1959.39	-465.55	1653.01	1165.17	1398.62	1419.57	-243.69
3	144	38	37.64	-2496.82	-144.21	-2314.97	-654.08	1092.46	717.54	986.45	823.55	-168.84
3	144	39	1067.95	-2914.93	947.09	-2794.07	-683.19	384.67	-196.29	366.56	-178.18	-100.96
3	144	40	2049.79	-2985.88	2019.89	-2955.99	-386.85	-194.67	-1639.89	-194.68	-1639.88	3.30
3	144	41	-1575.40	-4001.79	-3999.93	-1577.26	-67.04	1462.29	965.47	1368.78	1058.97	194.20
3	144	42	-674.17	-6661.09	-6660.48	-674.77	-60.17	1823.56	-266.31	1798.01	-240.76	229.65
3	144	43	-1501.05	-2077.97	-1523.64	-2055.37	111.91	1299.31	973.17	980.50	1291.97	-48.36
3	144	44	-425.72	-2204.18	-433.98	-2195.92	-120.96	740.56	510.40	643.52	607.45	113.66
3	144	45	1009.17	-2879.53	970.30	-2840.66	-386.81	193.61	-344.15	119.75	-270.30	185.10
3	144	46	2453.56	-3034.69	2448.62	-3029.75	-164.64	-298.02	-1735.90	-302.15	-1731.77	

Viale Duca Alessandro n. 11 – 43123 Parma
Cell. 335 1403156 – E mail ing.concari@gmail.com
Sito web: studioaire.it – P.IVA 02561480340

76.92												
3	144	47	-1065.67	-3287.36	-3286.15	-1066.88	51.88	1197.86	-494.82	-427.14	1130.19	
331.62												
3	144	48	1237.81	-6770.09	-6406.67	874.38	-1666.79	-103.88	-1240.06	-1179.63	-164.32	
254.97												
3	144	49	-727.38	-2134.96	-1276.93	-1585.40	686.68	729.19	-304.62	-302.15	726.71	
50.53												
3	144	50	-860.63	-1810.78	-863.81	-1807.60	54.83	227.71	-339.57	-299.13	187.27	
145.97												
3	144	51	1037.02	-2683.65	1036.30	-2682.92	-52.00	42.25	-443.23	-119.14	-281.84	
228.70												
3	144	52	2674.67	-2979.54	2674.47	-2979.34	-33.47	-369.81	-1701.35	-375.62	-1695.54	
87.81												
3	144	53	-190.08	-2690.28	-2689.85	-190.52	-32.98	1496.28	119.41	120.83	1494.86	-
44.15												
3	144	54	-317.73	-1653.76	-1484.24	-487.25	-444.69	-6.65	-263.95	-194.02	-76.58	-
114.47												
3	144	55	-570.11	-2089.37	-1464.05	-1195.43	747.66	1214.35	247.60	248.30	1213.65	
26.06												
3	144	56	-154.99	-1837.24	-196.58	-1795.65	261.24	106.50	-11.70	-1.06	95.85	
33.84												
3	144	57	989.80	-2420.48	989.70	-2420.38	18.01	-69.14	-448.97	-165.21	-352.90	
165.11												
3	144	58	2599.93	-2889.42	2599.84	-2889.33	-21.88	-376.95	-1589.59	-379.78	-1586.75	
58.58												
3	144	59	-413.91	-1959.50	-1893.22	-480.18	313.13	1405.30	384.41	399.67	1390.04	-
123.89												
3	144	60	-488.43	-2497.46	-2451.42	-534.46	300.62	64.40	-178.05	27.37	-141.01	-
87.22												
3	144	61	-308.81	-1986.08	-1242.11	-1052.78	833.28	1186.04	383.38	383.67	1185.75	
15.38												
3	144	62	-55.33	-1789.27	-235.23	-1609.36	528.76	141.04	-117.62	43.63	-20.22	
125.33												
3	144	63	1027.73	-2275.81	1025.97	-2274.05	76.16	-6.47	-440.88	-100.63	-346.72	
178.99												
3	144	64	2404.37	-2696.65	2404.02	-2696.30	-42.09	-325.34	-1394.75	-326.18	-1393.91	
29.97												
3	144	65	-225.74	-2057.51	-1495.22	-788.03	844.88	1265.43	462.64	512.08	1215.99	-
193.00												
3	144	66	-573.94	-2877.63	-2755.62	-695.95	515.93	204.88	-219.72	147.64	-162.47	-
145.02												
3	144	67	181.55	-2289.46	-989.12	-1118.79	1233.80	1024.73	441.45	454.17	1012.01	
85.21												
3	144	68	149.97	-1861.83	-285.27	-1426.59	828.36	222.24	-268.08	70.88	-116.72	
226.50												
3	144	69	933.36	-1985.82	912.19	-1964.65	247.69	86.01	-394.54	-49.35	-259.17	
216.16												
3	144	70	2150.54	-2273.20	2150.40	-2273.06	-24.45	-246.37	-1082.80	-246.65	-1082.52	
15.17												
3	144	71	469.78	-2374.10	-1013.57	-890.75	1420.62	978.44	328.63	480.87	826.21	-
275.22												
3	144	72	-729.19	-2315.25	-2196.58	-847.86	417.30	273.96	-284.26	142.83	-153.13	-
236.66												
3	144	73	792.81	-2892.48	-792.59	-1307.07	1824.60	771.32	287.79	402.67	656.43	
205.80												
3	144	74	687.16	-2200.78	-299.62	-1214.00	1369.68	340.50	-379.17	71.71	-110.38	
348.13												
3	144	75	866.64	-1648.81	681.48	-1463.64	656.88	221.44	-355.78	10.76	-145.09	
277.89												
3	144	76	1626.83	-1341.04	1622.41	-1336.62	114.35	-148.49	-612.32	-150.10	-610.71	
27.29												
3	144	77	392.26	-2058.97	-555.92	-1110.79	1193.80	310.35	-334.61	-310.83	286.58	-
121.52												
3	144	78	890.80	-3015.21	-530.64	-1593.77	1879.28	244.87	-316.97	-294.54	222.44	
110.00												
3	144	79	714.93	-2981.56	-186.36	-2080.27	1587.22	83.29	-210.22	-97.65	-29.28	
142.72												
3	144	80	1430.97	-1027.79	541.53	-138.35	1181.45	109.24	-189.63	47.41	-127.81	
121.06												
3	164	15	287.94	-1537.47	-1076.83	-172.70	-792.89	-92.40	-397.03	-157.48	-331.94	-
124.86												
3	164	16	839.74	-740.06	-294.69	394.37	710.80	2.39	-195.10	-8.69	-184.02	
45.45												
3	164	17	253.67	-247.59	52.09	-46.01	245.78	15.16	-217.47	-133.97	-68.34	-
111.59												
3	164	18	-122.59	-908.98	-488.15	-543.42	-392.22	-42.10	-411.46	-258.55	-195.02	
181.93												
3	164	19	-71.40	-1348.01	-542.69	-876.72	-616.06	362.68	-535.27	-426.46	253.87	
293.03												
3	164	20	-172.24	-1596.04	-1475.27	-293.01	-396.70	1182.47	41.14	292.91	930.69	
473.25												
3	164	21	-188.11	-1169.66	-233.85	-1123.92	206.90	80.43	-867.06	-416.07	-370.56	
473.19												
3	164	22	841.95	-1875.06	-418.55	-614.56	-1354.97	302.41	-457.57	-457.56	302.40	2.85
3	164	23	209.62	-1838.73	-731.11	-897.99	-1020.77	941.30	692.25	746.30	887.26	-
102.66												
3	164	24	1415.84	-1716.06	-118.75	-181.48	-1565.64	232.88	-398.33	-321.98	156.52	-
205.83												
3	164	25	622.18	-1873.87	-47.18	-1204.50	-1105.77	1159.16	133.76	699.17	593.75	-
509.98												
3	164	26	1453.27	-806.36	218.44	428.47	-1124.93	220.64	-474.33	-162.23	-91.46	-
345.68												
3	164	27	841.35	-2147.40	379.03	-1685.07	-1080.76	975.19	-512.03	362.15	101.01	-
732.06												
3	164	28	599.28	-2087.80	296.84	-1785.35	-849.25	-11.06	-880.12	-83.20	-807.98	-
239.78												
3	164	29	-750.84	-2133.65	-1799.97	-1084.52	-591.67	1441.64	631.66	773.15	1300.15	-
307.55												

Viale Duca Alessandro n. 11 – 43123 Parma
Cell. 335 1403156 – E mail ing.concari@gmail.com
Sito web: studioaire.it – P.IVA 02561480340

3	164	30	528.61	-5909.94	-4868.59	-512.75	2370.74	175.63	-629.31	-421.38	-32.29
3	164	31	-483.49	-1905.04	-933.00	-1455.53	-661.02	1470.17	991.26	1169.29	1292.14
3	164	32	168.65	-2216.04	-104.88	-1942.50	-759.91	1299.22	605.37	1007.87	896.72
3	164	33	611.48	-2674.10	412.52	-2475.14	-783.66	752.28	-119.32	503.68	129.28
3	164	34	720.41	-2775.63	597.73	-2652.95	-643.31	-65.57	-1343.13	-73.44	-1335.26
3	164	35	-1290.06	-2759.43	-2727.91	-1321.58	212.88	1710.88	714.66	1498.80	926.74
3	164	36	-476.39	-5172.76	-5171.40	-477.74	79.88	1885.29	-231.24	1855.68	-201.63
3	164	37	-1047.88	-1933.09	-1145.66	-1835.32	-277.47	1499.00	1098.70	1300.50	1297.20
3	164	38	-138.69	-2383.55	-229.56	-2292.68	-442.43	1088.07	818.34	1000.75	905.65
3	164	39	503.25	-2919.29	418.34	-2834.37	-532.37	444.73	33.85	438.47	40.11
3	164	40	873.03	-3030.58	835.00	-2992.55	-383.41	-159.27	-1610.84	-159.61	-1610.49
3	164	41	-1397.23	-2994.73	-2994.08	-1397.88	-32.18	1190.37	841.48	1139.46	892.39
3	164	42	-596.89	-4852.57	-4851.82	-597.64	-56.51	1465.75	-207.59	1447.48	-189.32
3	164	43	-1151.71	-1964.77	-1168.28	-1948.20	114.88	1190.19	858.17	877.86	1170.50
3	164	44	-496.26	-2205.08	-498.85	-2202.50	-66.43	774.90	546.72	660.42	661.20
3	164	45	425.36	-2931.23	392.09	-2897.96	-332.52	315.55	-208.92	176.39	-69.76
3	164	46	1172.40	-3059.21	1169.02	-3055.83	-119.55	-266.83	-1696.68	-273.41	-1690.10
3	164	47	-981.31	-2316.85	-2316.80	-981.36	-8.16	908.85	-461.33	-427.69	875.20
3	164	48	974.33	-5006.04	-4728.34	696.62	-1258.43	-133.71	-1055.74	-1020.33	-169.12
3	164	49	-689.65	-1903.78	-1011.45	-1581.98	535.87	681.62	-316.13	-316.01	681.50
3	164	50	-785.24	-1877.15	-786.08	-1876.30	-30.40	128.20	-407.72	-379.96	100.44
3	164	51	503.71	-2759.31	503.62	-2759.23	-16.61	165.01	-353.19	-100.30	-87.88
3	164	52	1441.67	-2991.79	1440.76	-2990.88	63.66	-349.17	-1650.79	-356.92	-1643.04
3	164	53	-316.85	-1990.92	-1987.66	-320.11	-73.76	1221.42	73.20	77.25	1217.37
3	164	54	-304.93	-1059.56	-883.16	-481.32	-319.37	-39.91	-243.63	-173.73	-109.81
3	164	55	-578.88	-1697.09	-1055.89	-1220.09	553.05	1063.69	161.37	161.42	1063.64 6.60
3	164	56	-24.42	-1948.64	-38.80	-1934.25	165.76	25.72	-76.00	-66.62	16.34
3	164	57	513.28	-2499.27	512.43	-2498.43	50.42	-16.92	-319.04	-156.07	-179.89
3	164	58	1482.74	-2904.34	1479.39	-2900.98	121.34	-363.24	-1538.03	-366.08	-1535.19
3	164	59	-467.97	-1422.54	-1380.63	-509.88	195.57	1153.32	303.51	320.08	1136.74
3	164	60	-442.52	-1799.34	-1747.03	-494.83	261.22	43.55	-175.44	12.78	-144.67
3	164	61	-426.96	-1583.23	-907.59	-1102.60	569.85	1024.13	312.10	312.13	1024.11 4.35
3	164	62	-81.66	-1785.77	-160.83	-1706.60	358.68	84.15	-134.19	15.04	-65.08
3	164	63	635.44	-2351.22	631.75	-2347.53	104.89	30.59	-278.41	-67.37	-180.46
3	164	64	1445.75	-2726.48	1441.21	-2721.94	137.56	-307.01	-1354.46	-307.35	-1354.12
3	164	65	-287.65	-1571.55	-1120.57	-738.63	612.88	1044.41	374.75	424.27	994.89
3	164	66	-502.76	-2216.86	-2093.32	-626.31	443.29	165.09	-204.22	116.24	-155.38
3	164	67	-43.64	-1810.08	-748.93	-1104.79	865.11	884.34	386.14	393.51	876.97
3	164	68	-38.74	-1683.53	-277.09	-1445.18	578.98	171.38	-244.13	66.80	-139.54
3	164	69	653.75	-2034.83	632.89	-2013.97	235.90	133.18	-225.31	5.63	-97.76
3	164	70	1408.48	-2324.12	1400.27	-2315.92	174.83	-219.26	-1058.64	-219.27	-1058.63 3.69
3	164	71	291.87	-1901.56	-802.68	-807.02	1096.71	825.30	248.96	399.94	674.31
3	164	72	-623.82	-1883.47	-1753.09	-754.20	383.71	225.33	-252.96	111.85	-139.48
3	164	73	487.41	-2293.39	-631.99	-1173.99	1363.73	652.41	281.92	360.47	573.86
3	164	74	397.16	-1816.87	-307.04	-1112.67	1031.13	267.85	-307.38	84.44	-123.97
3	164	75	700.20	-1543.96	558.37	-1402.13	546.06	264.13	-202.49	81.76	-20.11
3	164	76	1194.57	-1434.94	1159.36	-1399.74	302.21	-116.61	-605.19	-118.06	-603.74
3	164	77	232.54	-1725.24	-455.07	-1037.63	934.55	259.85	-280.50	-255.00	234.34
3	164	78	658.19	-2491.15	-450.89	-1382.07	1504.26	206.01	-266.61	-252.31	191.71
3	164	79	664.80	-2330.30	-108.04	-1557.46	1310.52	41.70	-173.58	-91.06	-40.82
3	164	80	1271.34	-722.80	448.16	100.37	981.79	74.26	-147.57	10.99	-84.30

Viale Duca Alessandro n. 11 – 43123 Parma
Cell. 335 1403156 – E mail ing.concari@gmail.com
Sito web: studioaire.it – P.IVA 02561480340

3	174	15	259.60	-1560.42	-1089.58	-211.24	-797.03	-91.43	-386.19	-150.50	-327.12	-100.16
3	174	16	803.34	-764.70	-314.10	352.73	709.59	4.78	-192.01	-4.23	-183.00	-118.00
3	174	17	278.94	-242.78	68.90	-32.74	255.86	16.31	-225.91	-139.19	-70.41	-41.14
3	174	18	-96.86	-899.55	-471.25	-525.15	-400.44	-40.61	-416.53	-263.05	-194.09	-116.12
3	174	19	-44.05	-1349.85	-553.60	-840.30	-636.97	365.07	-538.13	-432.72	259.65	-184.77
3	174	20	-138.25	-1647.95	-1522.18	-264.01	-417.20	1188.83	44.64	284.42	949.05	-290.00
3	174	21	-181.89	-1181.54	-245.55	-1117.88	244.10	79.64	-878.17	-429.10	-369.42	-465.68
3	174	22	896.88	-1900.43	-423.79	-579.76	-1396.48	303.41	-459.68	-459.65	303.38	-477.97
3	174	23	259.64	-1884.32	-746.76	-877.93	-1069.97	952.34	668.32	733.15	887.51	-4.59
3	174	24	1465.75	-1749.08	-116.40	-166.92	-1607.22	230.51	-399.36	-318.04	149.19	-119.21
3	174	25	680.77	-1906.69	-41.08	-1184.83	-1160.47	1148.66	100.14	675.70	573.09	-211.20
3	174	26	1470.23	-839.17	225.25	405.82	-1151.16	216.91	-471.34	-154.30	-100.14	-521.74
3	174	27	895.08	-2152.00	404.09	-1661.01	-1120.28	946.62	-536.61	338.00	72.01	-343.06
3	174	28	657.84	-2036.11	374.53	-1752.80	-826.41	-17.85	-865.61	-89.40	-794.06	-729.59
3	174	29	-745.27	-2213.64	-1866.26	-1092.66	-624.03	1473.28	617.01	764.77	1325.52	-235.67
3	174	30	547.63	-6146.72	-5081.47	-517.61	2448.75	185.25	-661.64	-451.43	-24.97	-323.56
3	174	31	-457.11	-1947.03	-959.48	-1444.67	-704.35	1475.78	971.12	1154.72	1292.18	-365.84
3	174	32	211.02	-2219.85	-94.31	-1914.51	-805.60	1280.35	568.78	981.97	867.16	-242.79
3	174	33	680.85	-2644.18	468.50	-2431.83	-813.00	727.69	-158.25	478.93	90.51	-351.12
3	174	34	851.91	-2722.04	737.10	-2607.23	-630.20	-71.11	-1322.34	-79.41	-1314.04	-398.13
3	174	35	-1306.65	-2867.43	-2837.46	-1336.63	214.20	1733.06	720.38	1512.31	941.12	-101.53
3	174	36	-476.08	-5394.24	-5392.91	-477.42	81.05	1917.96	-238.17	1887.20	-207.41	-418.11
3	174	37	-1064.34	-1945.50	-1182.37	-1827.47	-300.12	1500.06	1091.36	1294.11	1297.31	-255.69
3	174	38	-112.54	-2363.07	-215.15	-2260.46	-469.47	1070.79	786.11	980.14	876.75	-204.35
3	174	39	584.60	-2873.65	494.50	-2783.55	-550.88	426.67	-6.60	417.96	2.10	-132.62
3	174	40	1049.72	-2977.79	1013.32	-2941.40	-381.14	-162.68	-1586.58	-162.89	-1586.37	-60.79
3	174	41	-1403.41	-3113.60	-3112.99	-1404.03	-32.34	1220.06	849.85	1162.39	907.52	-17.39
3	174	42	-600.21	-5067.87	-5067.16	-600.92	-56.46	1505.72	-214.62	1486.47	-195.36	-134.26
3	174	43	-1194.13	-1952.40	-1212.24	-1934.29	115.78	1191.14	865.96	882.63	1174.48	-180.99
3	174	44	-482.80	-2169.19	-486.12	-2165.87	-74.84	756.59	535.20	648.34	643.45	-71.70
3	174	45	509.33	-2877.05	474.85	-2842.57	-339.96	286.59	-222.82	165.01	-101.25	-110.67
3	174	46	1360.93	-3009.20	1357.00	-3005.27	-131.04	-267.19	-1672.76	-273.03	-1666.91	-217.14
3	174	47	-977.19	-2438.27	-2438.25	-977.22	6.26	944.42	-457.66	-418.39	905.15	-90.43
3	174	48	1004.38	-5205.49	-4918.07	716.96	-1304.70	-127.33	-1067.37	-1028.08	-166.62	-231.34
3	174	49	-692.77	-1910.06	-1047.21	-1555.62	553.02	683.47	-303.87	-303.59	683.20	-188.14
3	174	50	-797.14	-1835.17	-797.39	-1834.91	-16.35	146.41	-384.08	-355.00	117.32	-16.47
3	174	51	574.88	-2703.19	574.62	-2702.94	-28.82	140.30	-356.38	-99.37	-116.72	-120.76
3	174	52	1615.62	-2944.39	1615.31	-2944.08	37.78	-345.98	-1630.01	-353.13	-1622.86	-248.19
3	174	53	-292.83	-2073.55	-2071.37	-295.01	-62.25	1253.36	83.88	87.12	1250.12	-95.56
3	174	54	-309.13	-1129.06	-961.01	-477.18	-330.98	-36.31	-241.78	-173.42	-104.67	-61.46
3	174	55	-575.68	-1735.68	-1114.36	-1196.99	578.53	1078.36	177.45	177.53	1078.28	8.72 -96.81
3	174	56	-64.18	-1895.13	-81.14	-1878.17	175.41	40.46	-61.22	-51.96	31.20	-29.25
3	174	57	572.50	-2447.24	572.10	-2446.83	35.06	-24.90	-330.19	-152.68	-202.41	-150.61
3	174	58	1634.68	-2857.66	1633.10	-2856.08	84.29	-358.58	-1519.84	-361.36	-1517.07	-56.71
3	174	59	-451.85	-1490.48	-1443.72	-498.62	215.36	1184.69	316.32	332.18	1168.83	-116.29
3	174	60	-443.48	-1877.01	-1825.40	-495.08	267.06	46.18	-175.05	15.65	-144.51	-76.31
3	174	61	-408.66	-1626.88	-957.34	-1078.20	606.10	1042.72	323.35	323.39	1042.68	5.59
3	174	62	-97.12	-1753.43	-187.23	-1663.31	375.69	93.20	-128.85	21.29	-56.94	-103.91
3	174	63	677.01	-2303.16	674.52	-2300.67	86.21	26.41	-297.56	-69.86	-201.30	-148.05
3	174	64	1569.67	-2680.74	1567.66	-2678.74	92.24	-304.15	-1338.08	-304.57	-1337.66	

Viale Duca Alessandro n. 11 – 43123 Parma
Cell. 335 1403156 – E mail ing.concari@gmail.com
Sito web: studioaire.it – P.IVA 02561480340

20.75												
3	174	65	-274.30	-1629.78	-1165.67	-738.40	643.19	1073.02	387.92	436.75	1024.19	-
176.26												
3	174	66	-506.63	-2281.74	-2158.62	-629.75	450.99	169.87	-206.26	120.56	-156.95	-
126.94												
3	174	67	-14.31	-1865.90	-785.88	-1094.33	912.86	901.52	394.18	402.24	893.46	
63.46												
3	174	68	-28.64	-1684.38	-289.64	-1423.38	603.35	178.34	-245.24	68.08	-134.98	
185.87												
3	174	69	675.60	-1998.17	657.54	-1980.11	219.01	126.68	-247.20	-1.41	-119.10	
177.44												
3	174	70	1495.38	-2282.84	1491.21	-2278.67	125.43	-219.18	-1045.36	-219.23	-1045.32	6.20
3	174	71	308.97	-1951.05	-827.07	-815.01	1130.00	845.52	261.29	411.73	695.08	-
255.45												
3	174	72	-633.50	-1916.15	-1788.82	-760.83	383.54	231.27	-257.69	115.89	-142.31	-
207.61												
3	174	73	517.40	-2364.11	-656.25	-1190.46	1415.78	668.36	282.57	366.56	584.37	
159.21												
3	174	74	417.05	-1854.57	-313.41	-1124.11	1061.02	277.56	-315.80	82.45	-120.68	
278.76												
3	174	75	699.54	-1540.87	561.22	-1402.54	539.23	256.88	-223.17	70.99	-37.27	
233.84												
3	174	76	1235.43	-1401.22	1210.38	-1376.18	255.75	-119.06	-597.51	-120.63	-595.95	
27.29												
3	174	77	235.19	-1752.62	-469.08	-1048.35	950.77	266.21	-287.74	-262.64	241.11	-
115.22												
3	174	78	664.59	-2544.65	-461.73	-1418.32	1531.68	211.16	-273.46	-257.96	195.65	
85.28												
3	174	79	639.52	-2426.04	-123.50	-1663.02	1325.47	48.40	-178.62	-92.41	-37.81	
110.18												
3	174	80	1257.59	-768.49	451.99	37.10	991.58	78.21	-151.98	15.35	-89.11	
102.56												
3	182	15	211.63	-1400.91	-988.85	-200.42	-703.32	-93.20	-392.60	-170.77	-315.02	-
131.18												
3	182	16	762.88	-613.95	-216.91	365.83	623.72	-4.11	-185.96	-20.64	-169.43	
52.27												
3	182	17	162.71	-254.59	12.96	-104.84	200.16	8.11	-203.31	-121.04	-74.16	-
103.08												
3	182	18	-213.25	-905.87	-515.70	-603.42	-343.52	-48.01	-392.53	-242.51	-198.02	
170.82												
3	182	19	-262.98	-1192.06	-505.52	-949.52	-408.07	339.91	-518.39	-404.25	225.76	
291.45												
3	182	20	-267.92	-1321.48	-1270.18	-319.22	-226.76	1128.11	4.56	280.46	852.21	
483.60												
3	182	21	18.46	-1078.11	4.39	-1064.04	123.43	72.68	-833.13	-391.34	-369.11	
452.77												
3	182	22	483.15	-1591.91	-415.09	-693.68	-1028.14	285.52	-452.55	-452.01	284.98	
19.91												
3	182	23	-33.26	-1523.88	-685.51	-871.62	-739.48	870.99	703.48	725.03	849.44	-
56.08												
3	182	24	1006.18	-1462.14	-169.86	-286.10	-1232.79	226.39	-402.36	-342.08	166.11	-
185.11												
3	182	25	324.89	-1612.86	-135.39	-1152.59	-824.65	1121.46	197.16	701.67	616.96	-
460.20												
3	182	26	1110.18	-699.60	107.72	302.87	-899.61	214.99	-469.19	-194.88	-59.32	-
335.31												
3	182	27	533.06	-1931.50	190.75	-1589.19	-852.33	1002.88	-437.17	388.76	176.95	-
712.20												
3	182	28	310.14	-2012.20	-2.45	-1699.61	-792.60	23.73	-828.56	-58.54	-746.29	-
251.69												
3	182	29	-709.48	-1742.96	-1493.70	-958.74	-442.13	1311.65	631.25	744.97	1197.93	-
253.86												
3	182	30	563.21	-4922.35	-3936.61	-422.53	2106.10	135.91	-554.89	-368.57	-50.40	-
306.58												
3	182	31	-566.68	-1603.78	-856.74	-1313.71	-465.50	1391.34	995.07	1143.14	1243.27	-
191.71												
3	182	32	-34.68	-1959.64	-216.75	-1777.57	-563.32	1286.91	665.22	1016.89	935.23	-
308.15												
3	182	33	300.54	-2435.73	145.41	-2280.59	-632.79	801.64	-13.51	541.23	246.90	-
380.08												
3	182	34	257.49	-2579.65	125.69	-2447.85	-597.12	-24.63	-1224.14	-34.49	-1214.28	-
108.31												
3	182	35	-1104.43	-2305.50	-2259.50	-1150.44	230.51	1594.60	678.93	1412.27	861.26	-
365.66												
3	182	36	-411.35	-4172.74	-4171.27	-412.82	74.31	1745.16	-207.96	1719.12	-181.91	-
224.03												
3	182	37	-990.73	-1672.78	-1039.56	-1623.96	-175.83	1437.90	1080.59	1265.35	1253.15	-
178.55												
3	182	38	-293.53	-2123.48	-358.44	-2058.57	-338.47	1095.58	871.09	1013.34	953.33	-
108.16												
3	182	39	174.82	-2649.85	98.98	-2574.01	-456.58	487.44	176.71	482.35	181.80	-
39.44												
3	182	40	318.04	-2767.05	276.61	-2725.61	-355.12	-113.09	-1449.30	-113.37	-1449.02	
19.43												
3	182	41	-1227.87	-2469.23	-2469.22	-1227.89	-4.23	1096.70	788.46	1059.16	826.01	
100.81												
3	182	42	-517.37	-3865.31	-3864.35	-518.33	-56.52	1334.75	-185.47	1319.12	-169.84	
153.32												
3	182	43	-1037.60	-1755.43	-1063.54	-1729.49	133.98	1153.48	820.12	843.61	1129.99	-
85.31												
3	182	44	-629.13	-1949.34	-631.17	-1947.30	-51.84	806.77	578.97	680.70	705.05	
113.25												
3	182	45	91.92	-2652.45	50.69	-2611.23	-333.82	402.59	-106.48	219.57	76.54	
244.28												
3	182	46	594.52	-2760.97	590.62	-2757.06	-114.40	-217.91	-1511.51	-225.53	-1503.88	
99.02												
3	182	47	-874.22	-1793.81	-1793.56	-874.47	-15.18	776.93	-462.15	-439.28	754.07	
166.76												

Viale Duca Alessandro n. 11 – 43123 Parma
Cell. 335 1403156 – E mail ing.concari@gmail.com
Sito web: studioaire.it – P.IVA 02561480340

3	182	48	871.21	-4009.35	-3770.38	632.24	-1053.18	-158.41	-991.18	-965.71	-183.87	143.39
3	182	49	-629.91	-1727.96	-949.90	-1407.97	498.97	690.37	-300.04	-300.03	690.36	-3.40
3	182	50	-920.14	-1629.73	-930.17	-1619.70	-83.78	109.42	-418.67	-396.38	87.14	106.17
3	182	51	187.36	-2477.30	185.98	-2475.93	-60.52	273.11	-284.73	-71.75	60.13	271.01
3	182	52	891.89	-2679.54	891.31	-2678.96	45.57	-302.43	-1455.97	-312.07	-1446.34	104.97
3	182	53	-300.70	-1596.47	-1594.65	-302.52	-48.56	1110.51	57.93	64.00	1104.43	-79.75
3	182	54	-223.68	-667.57	-434.05	-457.20	-221.65	-67.38	-242.75	-168.28	-141.85	-86.68
3	182	55	-486.38	-1509.19	-926.24	-1069.33	506.38	1015.69	130.80	130.82	1015.67	-4.10
3	182	56	-95.63	-1748.26	-101.91	-1741.98	101.70	16.20	-90.07	-81.77	7.90	28.52
3	182	57	212.96	-2225.67	212.55	-2225.26	-31.52	66.19	-244.02	-133.32	-44.50	148.61
3	182	58	972.73	-2598.78	970.98	-2597.03	78.94	-320.71	-1349.65	-324.52	-1345.83	62.53
3	182	59	-405.23	-1140.24	-1088.87	-456.60	187.40	1055.31	270.77	289.07	1037.01	-118.40
3	182	60	-352.98	-1319.68	-1226.29	-446.37	285.59	29.88	-187.79	2.63	-160.55	-72.03
3	182	61	-388.45	-1396.00	-800.30	-984.15	495.31	968.73	287.19	287.21	968.71	-3.75
3	182	62	-194.66	-1582.15	-240.26	-1536.55	247.35	72.20	-122.78	11.59	-62.17	90.25
3	182	63	363.25	-2114.00	363.24	-2113.99	-4.55	87.42	-185.65	-38.60	-59.62	136.13
3	182	64	979.06	-2454.96	977.35	-2453.25	76.58	-266.63	-1191.37	-267.27	-1190.73	24.23
3	182	65	-242.28	-1330.25	-901.27	-671.26	531.69	961.23	335.94	388.41	908.76	-173.37
3	182	66	-393.46	-1753.26	-1585.52	-561.21	447.17	144.49	-210.14	98.65	-164.30	-118.98
3	182	67	-106.90	-1588.39	-679.65	-1015.64	721.44	835.01	366.00	370.51	830.49	45.80
3	182	68	-206.49	-1477.65	-357.52	-1326.62	411.31	156.29	-218.54	68.68	-130.94	158.62
3	182	69	411.00	-1851.29	407.73	-1848.02	85.97	180.84	-141.09	36.61	3.15	160.09
3	182	70	1007.75	-2122.28	1004.13	-2118.66	106.41	-182.83	-939.49	-183.02	-939.31	11.80
3	182	71	182.47	-1633.54	-679.65	-771.42	906.84	771.32	210.24	366.99	614.57	-251.75
3	182	72	-507.92	-1545.49	-1375.11	-678.30	384.38	202.47	-252.50	94.22	-144.25	-193.73
3	182	73	292.63	-2019.93	-585.63	-1141.67	1122.36	606.35	282.78	343.30	545.83	126.17
3	182	74	137.07	-1589.21	-368.16	-1083.99	785.43	241.55	-267.04	87.79	-113.28	233.58
3	182	75	462.39	-1404.88	398.45	-1340.93	339.58	290.91	-134.05	108.55	48.31	210.33
3	182	76	920.28	-1356.73	895.34	-1331.79	237.01	-90.38	-549.08	-93.49	-545.97	37.61
3	182	77	35.24	-1516.36	-411.36	-1069.76	702.49	239.10	-261.39	-233.63	211.34	-114.56
3	182	78	381.35	-2211.51	-415.17	-1414.99	1196.17	192.70	-248.59	-237.59	181.70	68.81
3	182	79	417.52	-2214.12	-109.95	-1686.64	1053.52	33.80	-158.34	-94.74	-29.81	90.42
3	182	80	970.03	-680.85	342.18	-53.01	801.44	59.39	-127.74	-14.31	-54.04	91.43
M_G			**N max**	**N min**	**N 1**	**N 2**	**N 1-2**	**M max**	**M min**	**M 1**	**M 2**	**M 1-2**
				-1.100e+04	-1.056e+04	-5641.65	-3720.92		-2623.00	-1871.72	-2622.92	-1061.06
			4783.50		4325.06	2034.07	4130.04	3089.73		3036.40	2146.98	753.05

MODELLO LOCALE TECNICO

Macro	Tipo	Angolo 1-Z (gradi)
2	**Setto**	**0.0**

M_S	Cmb	Z	N memb.	V memb.	V orto	M memb.	M orto	T
		cm	daN	daN	daN	daN m	daN m	daN m
2	4	0.0	-3.349e+04	1.290e+04	-3.670e+04	-8347.32	2.751e+04	-52.67
2	4	47.14	-3.648e+04	1.276e+04	-3.670e+04	-6676.61	9544.58	-344.54
2	4	94.29	-3.776e+04	1.132e+04	-2.249e+04	-1.125e+04	-783.35	-433.64
2	4	141.43	-3.947e+04	9453.10	-1.130e+04	-1.798e+04	-5838.61	-404.31
2	4	188.57	-4.065e+04	7477.33	-3336.30	-2.321e+04	-7233.60	-258.74
2	4	235.71	-4.026e+04	5633.49	2151.64	-2.273e+04	-6107.53	-16.94

Viale Duca Alessandro n. 11 – 43123 Parma
Cell. 335 1403156 – E mail ing.concari@gmail.com
Sito web: studioaire.it – P.IVA 02561480340

2	4	282.86	-3.746e+04	4262.56	5570.21	-1.348e+04	-3359.68	183.00
2	4	330.00	-3.336e+04	3883.30	6802.89	-1719.47	80.16	157.79
2	6	0.0	-4.398e+04	1.281e+04	-3.841e+04	-7250.72	3.039e+04	-31.84
2	6	47.14	-4.764e+04	1.259e+04	-3.841e+04	-5307.83	1.161e+04	-329.37
2	6	94.29	-4.993e+04	1.115e+04	-2.376e+04	-1.034e+04	676.68	-447.94
2	6	141.43	-5.285e+04	9333.11	-1.227e+04	-1.809e+04	-4836.25	-430.50
2	6	188.57	-5.531e+04	7401.89	-4110.71	-2.445e+04	-6591.58	-279.61
2	6	235.71	-5.605e+04	5571.37	1533.87	-2.454e+04	-5746.32	-14.18
2	6	282.86	-5.405e+04	4199.04	5083.58	-1.463e+04	-3208.84	209.22
2	6	330.00	-5.036e+04	3823.98	6387.42	-1735.04	48.92	182.16
2	8	0.0	-4.398e+04	1.281e+04	-3.841e+04	-7250.72	3.039e+04	-31.84
2	8	47.14	-4.764e+04	1.259e+04	-3.841e+04	-5307.83	1.161e+04	-329.37
2	8	94.29	-4.993e+04	1.115e+04	-2.376e+04	-1.034e+04	676.68	-447.94
2	8	141.43	-5.285e+04	9333.11	-1.227e+04	-1.809e+04	-4836.25	-430.50
2	8	188.57	-5.531e+04	7401.89	-4110.71	-2.445e+04	-6591.58	-279.61
2	8	235.71	-5.605e+04	5571.37	1533.87	-2.454e+04	-5746.32	-14.18
2	8	282.86	-5.405e+04	4199.04	5083.58	-1.463e+04	-3208.84	209.22
2	8	330.00	-5.036e+04	3823.98	6387.42	-1735.04	48.92	182.16
2	12	0.0	-2.525e+04	1.052e+04	-2.927e+04	-6929.23	2.183e+04	-49.16
2	12	47.14	-2.766e+04	1.042e+04	-2.927e+04	-5661.27	7508.06	-290.47
2	12	94.29	-2.881e+04	9263.25	-1.802e+04	-9416.64	-769.92	-358.51
2	12	141.43	-3.029e+04	7759.76	-9132.44	-1.487e+04	-4858.36	-332.39
2	12	188.57	-3.134e+04	6162.83	-2749.00	-1.906e+04	-6014.44	-212.60
2	12	235.71	-3.110e+04	4665.64	1720.31	-1.860e+04	-5118.57	-15.42
2	12	282.86	-2.891e+04	3545.53	4601.17	-1.101e+04	-2856.32	147.13
2	12	330.00	-2.567e+04	3227.62	5777.96	-1398.10	70.60	126.76
2	34	0.0	-1.554e+04	4.070e+04	-2.900e+04	-4.543e+04	2.193e+04	-46.12
2	34	47.14	-1.772e+04	4.060e+04	-2.900e+04	-4.412e+04	8630.55	-330.72
2	34	94.29	-2.005e+04	3.832e+04	-1.777e+04	-4.301e+04	328.30	-479.47
2	34	141.43	-2.356e+04	3.528e+04	-9208.70	-4.809e+04	-3892.73	-508.92
2	34	188.57	-2.703e+04	3.203e+04	-3022.90	-5.463e+04	-5338.28	-364.00
2	34	235.71	-2.835e+04	2.867e+04	1353.74	-5.370e+04	-4661.76	-69.06
2	34	282.86	-2.723e+04	2.552e+04	4337.54	-4.223e+04	-2642.60	199.04
2	34	330.00	-2.541e+04	2.313e+04	5273.84	-2.600e+04	-88.20	228.34
2	44	0.0	4916.39	7331.74	-3.302e+04	1.156e+04	2.476e+04	-738.03
2	44	47.14	2648.13	7266.94	-3.302e+04	1.368e+04	1.156e+04	-938.07
2	44	94.29	-2844.55	5782.04	-2.030e+04	2689.68	1727.11	-1072.30
2	44	141.43	-1.194e+04	4359.20	-1.097e+04	-2.201e+04	-3551.05	-941.74
2	44	188.57	-1.723e+04	2989.91	-4105.06	-3.242e+04	-5933.58	-739.75
2	44	235.71	-2.094e+04	1621.73	980.25	-3.751e+04	-5425.34	-291.63
2	44	282.86	-2.175e+04	568.58	4996.60	-2.602e+04	-3351.44	106.84
2	44	330.00	-2.297e+04	493.63	6381.49	-7544.98	-378.69	128.67
2	46	0.0	5123.49	2.108e+04	-3.324e+04	-1.001e+04	2.494e+04	-620.12
2	46	47.14	2936.84	2.098e+04	-3.324e+04	-8710.38	1.164e+04	-855.88
2	46	94.29	-2399.46	1.911e+04	-2.049e+04	-1.598e+04	1753.95	-1014.53
2	46	141.43	-1.144e+04	1.710e+04	-1.114e+04	-3.797e+04	-3571.57	-956.89
2	46	188.57	-1.729e+04	1.510e+04	-4203.33	-4.866e+04	-5990.51	-730.16
2	46	235.71	-2.117e+04	1.303e+04	980.34	-5.266e+04	-5500.66	-271.03
2	46	282.86	-2.202e+04	1.118e+04	5112.72	-3.973e+04	-3395.95	141.90
2	46	330.00	-2.328e+04	1.017e+04	6511.83	-1.943e+04	-379.44	177.75
2	47	0.0	-5.193e+04	308.55	-3.542e+04	-738.08	2.530e+04	420.32
2	47	47.14	-5.536e+04	134.28	-3.542e+04	-1570.60	5076.47	21.93
2	47	94.29	-5.368e+04	-379.03	-2.271e+04	-5261.90	-4832.89	69.35
2	47	141.43	-4.902e+04	-1445.74	-1.149e+04	2365.69	-9634.20	99.46
2	47	188.57	-4.637e+04	-2705.37	-3113.06	2401.14	-1.034e+04	179.99
2	47	235.71	-4.247e+04	-3698.48	3114.10	7542.13	-8757.31	208.54
2	47	282.86	-3.681e+04	-4146.21	7226.05	1.329e+04	-4910.10	191.87
2	47	330.00	-2.832e+04	-3774.59	1.038e+04	1.636e+04	616.49	108.34
2	66	0.0	-2.156e+04	2.312e+04	-2.799e+04	-2.327e+04	2.112e+04	-39.80
2	66	47.14	-2.375e+04	2.301e+04	-2.799e+04	-2.196e+04	7821.29	-280.50
2	66	94.29	-2.522e+04	2.141e+04	-1.710e+04	-2.332e+04	-94.52	-383.93
2	66	141.43	-2.740e+04	1.930e+04	-8672.51	-2.834e+04	-4016.68	-385.95
2	66	188.57	-2.936e+04	1.706e+04	-2663.81	-3.343e+04	-5210.42	-263.90
2	66	235.71	-2.973e+04	1.483e+04	1484.86	-3.289e+04	-4444.79	-36.25
2	66	282.86	-2.806e+04	1.289e+04	4129.87	-2.416e+04	-2455.97	162.66
2	66	330.00	-2.556e+04	1.169e+04	4941.53	-1.231e+04	-10.14	165.17
2	76	0.0	-1.273e+04	7466.05	-2.990e+04	3237.96	2.246e+04	-350.69
2	76	47.14	-1.492e+04	7359.10	-2.990e+04	4540.70	9156.33	-552.86
2	76	94.29	-1.775e+04	6170.71	-1.832e+04	-2352.07	523.13	-645.94
2	76	141.43	-2.237e+04	4881.23	-9518.58	-1.622e+04	-3888.24	-576.06
2	76	188.57	-2.509e+04	3595.84	-3168.09	-2.312e+04	-5513.36	-429.56
2	76	235.71	-2.646e+04	2368.46	1331.32	-2.534e+04	-4818.45	-136.23
2	76	282.86	-2.562e+04	1454.48	4470.11	-1.671e+04	-2791.26	118.49
2	76	330.00	-2.448e+04	1321.74	5499.49	-4024.38	-137.26	118.40
2	78	0.0	-1.246e+04	1.449e+04	-2.989e+04	-7709.77	2.246e+04	-295.01
2	78	47.14	-1.464e+04	1.438e+04	-2.989e+04	-6407.03	9159.43	-513.37
2	78	94.29	-1.743e+04	1.296e+04	-1.832e+04	-1.143e+04	535.45	-620.73
2	78	141.43	-2.205e+04	1.131e+04	-9532.51	-2.395e+04	-3875.75	-583.49
2	78	188.57	-2.505e+04	9620.78	-3185.45	-3.085e+04	-5507.63	-425.30
2	78	235.71	-2.653e+04	7957.72	1320.93	-3.247e+04	-4822.80	-125.30
2	78	282.86	-2.572e+04	6590.64	4478.62	-2.307e+04	-2793.46	137.47
2	78	330.00	-2.461e+04	6001.49	5495.36	-9416.43	-140.14	143.08
2	79	0.0	-4.011e+04	4145.05	-2.445e+04	-4093.24	1.849e+04	231.64
2	79	47.14	-4.230e+04	4038.11	-2.445e+04	-2790.49	5184.99	35.34
2	79	94.29	-4.114e+04	3327.67	-1.480e+04	-4317.62	-1398.46	4.57
2	79	141.43	-3.880e+04	2237.64	-6955.64	-1601.28	-4356.15	5.19
2	79	188.57	-3.734e+04	1042.48	-1573.97	-2383.28	-4700.73	54.97
2	79	235.71	-3.513e+04	30.07	1856.01	-235.29	-3713.77	104.12
2	79	282.86	-3.172e+04	-578.00	3444.09	3635.34	-1819.28	131.05
2	79	330.00	-2.668e+04	-518.79	3856.46	6925.31	245.19	88.66
2	91	0.0	-2.747e+04	7941.91	-2.477e+04	-4726.96	1.893e+04	-11.72
2	91	47.14	-2.940e+04	7829.56	-2.477e+04	-3384.46	6788.38	-180.21
2	91	94.29	-2.984e+04	6863.12	-1.488e+04	-6111.77	-44.75	-250.45
2	91	141.43	-3.058e+04	5644.47	-7228.80	-1.038e+04	-3267.48	-239.73
2	91	188.57	-3.103e+04	4381.69	-1957.67	-1.383e+04	-4063.88	-153.82
2	91	235.71	-3.052e+04	3226.19	1437.80	-1.379e+04	-3296.53	-5.06
2	91	282.86	-2.850e+04	2390.08	3230.15	-8245.75	-1677.86	119.55
2	91	330.00	-2.561e+04	2185.62	3416.41	-1071.23	31.86	103.43

Viale Duca Alessandro n. 11 – 43123 Parma
Cell. 335 1403156 – E mail ing.concari@gmail.com
Sito web: studioaire.it – P.IVA 02561480340

2	92	0.0	-2.599e+04	9659.43	-2.777e+04	-6195.14	2.086e+04	-36.68
2	92	47.14	-2.824e+04	9553.84	-2.777e+04	-4902.34	7268.17	-253.72
2	92	94.29	-2.915e+04	8463.21	-1.698e+04	-8315.02	-528.20	-322.49
2	92	141.43	-3.039e+04	7054.66	-8497.89	-1.337e+04	-4328.07	-301.51
2	92	188.57	-3.124e+04	5569.11	-2485.22	-1.731e+04	-5364.25	-193.01
2	92	235.71	-3.091e+04	4185.82	1626.14	-1.699e+04	-4511.22	-11.97
2	92	282.86	-2.878e+04	3160.38	4144.16	-1.009e+04	-2463.50	137.94
2	92	330.00	-2.565e+04	2880.28	4990.78	-1289.14	57.69	118.99
2	94	0.0	-3.298e+04	9597.26	-2.891e+04	-5464.07	2.278e+04	-22.79
2	94	47.14	-3.568e+04	9436.96	-2.891e+04	-3989.81	8644.10	-243.61
2	94	94.29	-3.726e+04	8349.50	-1.782e+04	-7704.99	445.15	-332.02
2	94	141.43	-3.931e+04	6974.67	-9145.54	-1.344e+04	-3659.83	-318.96
2	94	188.57	-4.101e+04	5518.82	-3001.49	-1.814e+04	-4936.24	-206.91
2	94	235.71	-4.144e+04	4144.40	1214.29	-1.820e+04	-4270.41	-10.13
2	94	282.86	-3.983e+04	3118.03	3819.74	-1.085e+04	-2362.94	155.42
2	94	330.00	-3.699e+04	2840.73	4713.80	-1299.52	36.86	135.23
2	96	0.0	-3.298e+04	9597.26	-2.891e+04	-5464.07	2.278e+04	-22.79
2	96	47.14	-3.568e+04	9436.96	-2.891e+04	-3989.81	8644.10	-243.61
2	96	94.29	-3.726e+04	8349.50	-1.782e+04	-7704.99	445.15	-332.02
2	96	141.43	-3.931e+04	6974.67	-9145.54	-1.344e+04	-3659.83	-318.96
2	96	188.57	-4.101e+04	5518.82	-3001.49	-1.814e+04	-4936.24	-206.91
2	96	235.71	-4.144e+04	4144.40	1214.29	-1.820e+04	-4270.41	-10.13
2	96	282.86	-3.983e+04	3118.03	3819.74	-1.085e+04	-2362.94	155.42
2	96	330.00	-3.699e+04	2840.73	4713.80	-1299.52	36.86	135.23
2	106	0.0	-2.768e+04	9303.49	-2.740e+04	-5755.29	2.086e+04	-28.91
2	106	47.14	-2.996e+04	9185.61	-2.740e+04	-4416.26	7447.40	-237.00
2	106	94.29	-3.091e+04	8120.45	-1.673e+04	-7752.36	-236.84	-309.99
2	106	141.43	-3.221e+04	6756.63	-8373.60	-1.279e+04	-3982.30	-292.64
2	106	188.57	-3.315e+04	5321.57	-2482.96	-1.678e+04	-5018.58	-187.95
2	106	235.71	-3.294e+04	3985.61	1506.10	-1.660e+04	-4220.12	-10.22
2	106	282.86	-3.093e+04	2997.85	3896.47	-9872.09	-2286.26	137.76
2	106	330.00	-2.791e+04	2733.44	4620.51	-1247.64	48.36	119.12
2	109	0.0	-2.747e+04	7941.91	-2.477e+04	-4726.96	1.893e+04	-11.72
2	109	47.14	-2.940e+04	7829.56	-2.477e+04	-3384.46	6788.38	-180.21
2	109	94.29	-2.984e+04	6863.12	-1.488e+04	-6111.77	-44.75	-250.45
2	109	141.43	-3.058e+04	5644.47	-7228.80	-1.038e+04	-3267.48	-239.73
2	109	188.57	-3.103e+04	4381.69	-1957.67	-1.383e+04	-4063.88	-153.82
2	109	235.71	-3.052e+04	3226.19	1437.80	-1.379e+04	-3296.53	-5.06
2	109	282.86	-2.850e+04	2390.08	3230.15	-8245.75	-1677.86	119.55
2	109	330.00	-2.561e+04	2185.62	3416.41	-1071.23	31.86	103.43
2	112	0.0	-2.614e+04	9487.67	-2.747e+04	-6048.32	2.067e+04	-34.18
2	112	47.14	-2.836e+04	9381.41	-2.747e+04	-4750.55	7220.19	-246.37
2	112	94.29	-2.922e+04	8303.20	-1.677e+04	-8094.69	-479.85	-315.28
2	112	141.43	-3.041e+04	6913.64	-8370.98	-1.307e+04	-4222.01	-295.33
2	112	188.57	-3.122e+04	5450.37	-2432.47	-1.697e+04	-5234.22	-189.09
2	112	235.71	-3.087e+04	4089.86	1607.30	-1.667e+04	-4389.75	-11.28
2	112	282.86	-2.875e+04	3083.35	4052.76	-9903.25	-2384.94	136.10
2	112	330.00	-2.565e+04	2810.82	4833.34	-1267.35	55.11	117.43
2	114	0.0	-2.629e+04	9315.92	-2.717e+04	-5901.50	2.047e+04	-31.69
2	114	47.14	-2.847e+04	9208.98	-2.717e+04	-4598.76	7172.21	-239.02
2	114	94.29	-2.929e+04	8143.19	-1.656e+04	-7874.37	-431.51	-308.08
2	114	141.43	-3.043e+04	6772.63	-8244.07	-1.277e+04	-4115.95	-289.15
2	114	188.57	-3.120e+04	5331.63	-2379.71	-1.662e+04	-5104.18	-185.17
2	114	235.71	-3.083e+04	3993.89	1588.47	-1.635e+04	-4268.28	-10.59
2	114	282.86	-2.872e+04	3006.32	3961.36	-9719.09	-2306.37	134.26
2	114	330.00	-2.564e+04	2741.35	4675.91	-1245.56	52.52	115.87
2	115	0.0	-2.747e+04	7941.91	-2.477e+04	-4726.96	1.893e+04	-11.72
2	115	47.14	-2.940e+04	7829.56	-2.477e+04	-3384.46	6788.38	-180.21
2	115	94.29	-2.984e+04	6863.12	-1.488e+04	-6111.77	-44.75	-250.45
2	115	141.43	-3.058e+04	5644.47	-7228.80	-1.038e+04	-3267.48	-239.73
2	115	188.57	-3.103e+04	4381.69	-1957.67	-1.383e+04	-4063.88	-153.82
2	115	235.71	-3.052e+04	3226.19	1437.80	-1.379e+04	-3296.53	-5.06
2	115	282.86	-2.850e+04	2390.08	3230.15	-8245.75	-1677.86	119.55
2	115	330.00	-2.561e+04	2185.62	3416.41	-1071.23	31.86	103.43
2	116	0.0	-2.629e+04	9315.92	-2.717e+04	-5901.50	2.047e+04	-31.69
2	116	47.14	-2.847e+04	9208.98	-2.717e+04	-4598.76	7172.21	-239.02
2	116	94.29	-2.929e+04	8143.19	-1.656e+04	-7874.37	-431.51	-308.08
2	116	141.43	-3.043e+04	6772.63	-8244.07	-1.277e+04	-4115.95	-289.15
2	116	188.57	-3.120e+04	5331.63	-2379.71	-1.662e+04	-5104.18	-185.17
2	116	235.71	-3.083e+04	3993.89	1588.47	-1.635e+04	-4268.28	-10.59
2	116	282.86	-2.872e+04	3006.32	3961.36	-9719.09	-2306.37	134.26
2	116	330.00	-2.564e+04	2741.35	4675.91	-1245.56	52.52	115.87
M_S			**N memb.**	**V memb.**	**V orto**	**M memb.**	**M orto**	**T**
			-5.605e+04	-4146.21	-3.841e+04	-5.463e+04	-1.034e+04	-1072.30
			5123.49	4.070e+04	1.038e+04	1.636e+04	3.039e+04	420.32

Macro	Tipo	Angolo 1-Z (gradi)
3	**Setto**	**0.0**

M_S	**Cmb**	**Z**	**N memb.**	**V memb.**	**V orto**	**M memb.**	**M orto**	**T**
		cm	daN	daN	daN	daN m	daN m	daN m
3	4	0.0	-4.458e+04	1.128e+04	4381.39	-1.483e+04	-9994.14	-339.82
3	4	47.14	-4.426e+04	1.130e+04	4381.39	-5860.34	-7884.09	-576.23
3	4	94.29	-4.111e+04	1.012e+04	3302.94	557.45	-6106.53	-347.23
3	4	141.43	-3.866e+04	8461.91	2757.25	4197.64	-4683.31	-231.07
3	4	188.57	-3.671e+04	6684.91	2625.57	5630.64	-3435.24	-137.11
3	4	235.71	-3.525e+04	5075.36	2712.40	4720.37	-2251.37	-58.37
3	4	282.86	-3.419e+04	3874.76	2850.85	1763.80	-1071.91	-15.33
3	4	330.00	-3.272e+04	3483.97	2820.75	-854.58	130.85	-16.17
3	6	0.0	-5.528e+04	1.118e+04	6213.67	-1.367e+04	-1.325e+04	-369.39
3	6	47.14	-5.535e+04	1.110e+04	6213.67	-4194.68	-1.028e+04	-607.25
3	6	94.29	-5.308e+04	9927.31	4726.75	1834.73	-7809.96	-339.92

Viale Duca Alessandro n. 11 – 43123 Parma
Cell. 335 1403156 – E mail ing.concari@gmail.com
Sito web: studioaire.it – P.IVA 02561480340

3	6	141.43	-5.184e+04	8319.73	3864.41	4435.87	-5861.22	-206.37
3	6	188.57	-5.119e+04	6593.54	3515.13	4687.18	-4198.25	-112.81
3	6	235.71	-5.094e+04	5004.22	3432.58	3118.40	-2686.72	-53.56
3	6	282.86	-5.072e+04	3805.15	3430.02	702.84	-1255.36	-32.18
3	6	330.00	-4.972e+04	3413.51	3313.22	-860.90	164.64	-32.24
3	8	0.0	-5.528e+04	1.118e+04	6213.67	-1.367e+04	-1.325e+04	-369.39
3	8	47.14	-5.535e+04	1.110e+04	6213.67	-4194.68	-1.028e+04	-607.25
3	8	94.29	-5.308e+04	9927.31	4726.75	1834.73	-7809.96	-339.92
3	8	141.43	-5.184e+04	8319.73	3864.41	4435.87	-5861.22	-206.37
3	8	188.57	-5.119e+04	6593.54	3515.13	4687.18	-4198.25	-112.81
3	8	235.71	-5.094e+04	5004.22	3432.58	3118.40	-2686.72	-53.56
3	8	282.86	-5.072e+04	3805.15	3430.02	702.84	-1255.36	-32.18
3	8	330.00	-4.972e+04	3413.51	3313.22	-860.90	164.64	-32.24
3	12	0.0	-3.467e+04	9162.01	3265.02	-1.233e+04	-7575.96	-274.41
3	12	47.14	-3.437e+04	9199.45	3265.02	-5119.33	-6002.48	-470.10
3	12	94.29	-3.184e+04	8266.12	2453.15	199.81	-4670.97	-289.85
3	12	141.43	-2.982e+04	6931.42	2056.26	3395.89	-3602.44	-198.07
3	12	188.57	-2.820e+04	5495.82	1980.20	4826.63	-2659.44	-120.76
3	12	235.71	-2.701e+04	4191.36	2077.34	4232.73	-1754.32	-51.76
3	12	282.86	-2.621e+04	3213.19	2215.75	1697.47	-838.77	-11.43
3	12	330.00	-2.516e+04	2888.23	2207.58	-678.94	102.43	-12.07
3	25	0.0	-2.608e+04	4.006e+04	4784.13	-3.498e+04	-8576.65	-187.40
3	25	47.14	-2.560e+04	4.013e+04	4784.13	-2.799e+04	-7001.83	-332.16
3	25	94.29	-2.484e+04	3.750e+04	3482.09	-2.084e+04	-5163.15	-109.11
3	25	141.43	-2.461e+04	3.438e+04	2874.30	-1.866e+04	-3298.94	94.84
3	25	188.57	-2.627e+04	3.100e+04	2468.66	-2.467e+04	-2085.86	79.79
3	25	235.71	-2.675e+04	2.759e+04	2081.57	-2.717e+04	-1118.26	3.06
3	25	282.86	-2.582e+04	2.435e+04	1637.53	-3.083e+04	-362.11	-83.51
3	25	330.00	-2.466e+04	2.178e+04	1192.31	-2.453e+04	284.94	-133.08
3	41	0.0	-1.278e+04	1.997e+04	7275.13	-1.673e+04	-9282.47	439.39
3	41	47.14	-1.162e+04	2.020e+04	7275.13	-8783.38	-7933.09	77.49
3	41	94.29	-1.251e+04	1.841e+04	4848.63	-9286.10	-5386.23	236.15
3	41	141.43	-1.344e+04	1.650e+04	3657.80	-1.053e+04	-2107.21	270.95
3	41	188.57	-1.694e+04	1.446e+04	2695.32	-2.109e+04	-798.76	205.99
3	41	235.71	-1.840e+04	1.252e+04	1690.28	-2.512e+04	130.04	92.12
3	41	282.86	-2.005e+04	1.077e+04	608.66	-2.739e+04	609.71	-13.64
3	41	330.00	-2.130e+04	9733.38	-322.22	-1.736e+04	652.24	-56.96
3	44	0.0	-6.107e+04	-2064.29	-1136.54	-1.014e+04	-5238.58	-1083.56
3	44	47.14	-6.097e+04	-2056.10	-1136.54	-2742.10	-3662.60	-1241.37
3	44	94.29	-5.381e+04	-2033.52	-273.12	1.084e+04	-3705.68	-1027.56
3	44	141.43	-4.744e+04	-2762.96	176.77	2.155e+04	-4981.10	-861.20
3	44	188.57	-3.938e+04	-3579.75	1032.37	3.766e+04	-4514.00	-590.81
3	44	235.71	-3.476e+04	-4205.94	2321.35	4.113e+04	-3695.24	-249.46
3	44	282.86	-3.171e+04	-4362.54	3806.77	3.527e+04	-2327.94	15.90
3	44	330.00	-2.900e+04	-3958.82	4761.18	1.624e+04	-444.16	55.99
3	46	0.0	-6.067e+04	1.243e+04	-854.94	-2.301e+04	-5559.44	-1199.59
3	46	47.14	-6.048e+04	1.243e+04	-854.94	-1.642e+04	-3883.78	-1307.36
3	46	94.29	-5.353e+04	1.177e+04	-6.11	-391.70	-3825.00	-1065.82
3	46	141.43	-4.750e+04	1.032e+04	421.49	1.090e+04	-5016.04	-830.06
3	46	188.57	-4.018e+04	8737.39	1193.60	2.564e+04	-4460.94	-568.89
3	46	235.71	-3.569e+04	7259.47	2354.63	2.770e+04	-3624.40	-258.05
3	46	282.86	-3.238e+04	6156.25	3688.28	2.127e+04	-2283.50	-20.81
3	46	330.00	-2.939e+04	5495.66	4529.53	4060.56	-441.48	-1.75
3	57	0.0	-2.962e+04	2.227e+04	4149.60	-2.082e+04	-8279.95	-201.67
3	57	47.14	-2.943e+04	2.226e+04	4149.60	-1.423e+04	-6607.21	-335.60
3	57	94.29	-2.803e+04	2.059e+04	3082.41	-9006.12	-4970.61	-144.21
3	57	141.43	-2.722e+04	1.853e+04	2550.51	-7298.16	-3491.29	-9.44
3	57	188.57	-2.743e+04	1.631e+04	2287.97	-1.008e+04	-2388.10	11.92
3	57	235.71	-2.720e+04	1.415e+04	2116.62	-1.178e+04	-1436.93	-9.85
3	57	282.86	-2.627e+04	1.223e+04	1937.04	-1.401e+04	-604.22	-48.14
3	57	330.00	-2.497e+04	1.094e+04	1711.34	-1.137e+04	180.53	-69.91
3	76	0.0	-4.606e+04	2777.46	1486.03	-9155.70	-6699.09	-614.59
3	76	47.14	-4.587e+04	2771.81	1486.03	-2566.20	-5024.07	-776.89
3	76	94.29	-4.138e+04	2353.86	1397.60	5768.51	-4259.22	-589.78
3	76	141.43	-3.756e+04	1450.87	1336.91	1.176e+04	-4189.46	-468.60
3	76	188.57	-3.320e+04	485.71	1620.09	1.928e+04	-3430.03	-311.04
3	76	235.71	-3.056e+04	-323.63	2184.95	2.032e+04	-2560.10	-129.30
3	76	282.86	-2.874e+04	-771.95	2852.43	1.652e+04	-1465.35	3.80
3	76	330.00	-2.688e+04	-706.55	3234.48	7015.27	-144.28	21.33
3	78	0.0	-4.568e+04	1.008e+04	1501.59	-1.599e+04	-6766.34	-669.83
3	78	47.14	-4.549e+04	1.007e+04	1501.59	-9398.59	-5091.80	-810.13
3	78	94.29	-4.114e+04	9284.84	1425.86	216.68	-4313.98	-606.22
3	78	141.43	-3.750e+04	7961.75	1384.92	6575.32	-4227.35	-453.65
3	78	188.57	-3.350e+04	6536.14	1666.54	1.353e+04	-3437.64	-300.98
3	78	235.71	-3.095e+04	5227.91	2210.97	1.399e+04	-2557.68	-135.00
3	78	282.86	-2.903e+04	4258.19	2843.03	1.004e+04	-1463.14	-16.43
3	78	330.00	-2.704e+04	3808.92	3193.75	1488.53	-140.67	-7.74
3	81	0.0	-2.184e+04	1.186e+04	5298.29	-1.176e+04	-8844.42	64.05
3	81	47.14	-2.165e+04	1.185e+04	5298.29	-5168.46	-7173.06	-141.65
3	81	94.29	-2.123e+04	1.045e+04	3762.06	-1325.36	-5150.71	6.23
3	81	141.43	-2.164e+04	8977.54	2963.64	-4886.10	-3010.28	89.24
3	81	188.57	-2.252e+04	7347.06	2462.98	-8363.63	-1844.25	80.53
3	81	235.71	-2.363e+04	5850.01	2032.28	-1.278e+04	-890.92	20.16
3	81	282.86	-2.384e+04	4526.82	1499.99	-1.338e+04	-179.23	-38.06
3	81	330.00	-2.346e+04	3907.62	1071.84	-8043.81	334.31	-91.80
3	92	0.0	-3.413e+04	8462.59	3417.09	-1.100e+04	-7737.50	-255.62
3	92	47.14	-3.391e+04	8469.25	3417.09	-4236.23	-6092.33	-431.32
3	92	94.29	-3.153e+04	7574.70	2579.65	530.58	-4709.05	-256.99
3	92	141.43	-2.970e+04	6321.49	2149.72	3154.75	-3602.59	-168.72
3	92	188.57	-2.825e+04	4985.09	2037.22	4111.10	-2634.96	-98.68
3	92	235.71	-2.717e+04	3776.46	2090.52	3363.64	-1721.82	-41.85
3	92	282.86	-2.633e+04	2877.20	2182.84	1205.35	-818.22	-11.95
3	92	330.00	-2.518e+04	2587.42	2153.02	-647.78	99.87	-12.60
3	94	0.0	-4.126e+04	8396.36	4638.62	-1.023e+04	-9910.15	-275.33
3	94	47.14	-4.130e+04	8335.62	4638.62	-3125.79	-7686.36	-452.00
3	94	94.29	-3.951e+04	7443.78	3528.86	1382.10	-5844.67	-252.11
3	94	141.43	-3.849e+04	6226.71	2887.83	3313.58	-4387.86	-152.25
3	94	188.57	-3.791e+04	4924.18	2630.25	3482.12	-3143.64	-82.48

Viale Duca Alessandro n. 11 – 43123 Parma
Cell. 335 1403156 – E mail ing.concari@gmail.com
Sito web: studioaire.it – P.IVA 02561480340

3	94	235.71	-3.762e+04	3729.03	2570.64	2295.66	-2012.05	-38.64
3	94	282.86	-3.736e+04	2830.80	2568.95	498.04	-940.52	-23.19
3	94	330.00	-3.651e+04	2540.45	2481.34	-652.00	122.39	-23.31
3	96	0.0	-4.126e+04	8396.36	4638.62	-1.023e+04	-9910.15	-275.33
3	96	47.14	-4.130e+04	8335.62	4638.62	-3125.79	-7686.36	-452.00
3	96	94.29	-3.951e+04	7443.78	3528.86	1382.10	-5844.67	-252.11
3	96	141.43	-3.849e+04	6226.71	2887.83	3313.58	-4387.86	-152.25
3	96	188.57	-3.791e+04	4924.18	2630.25	3482.12	-3143.64	-82.48
3	96	235.71	-3.762e+04	3729.03	2570.64	2295.66	-2012.05	-38.64
3	96	282.86	-3.736e+04	2830.80	2568.95	498.04	-940.52	-23.19
3	96	330.00	-3.651e+04	2540.45	2481.34	-652.00	122.39	-23.31
3	106	0.0	-3.534e+04	8169.58	3722.23	-1.032e+04	-8236.65	-252.04
3	106	47.14	-3.520e+04	8150.45	3722.23	-3660.90	-6447.08	-419.94
3	106	94.29	-3.300e+04	7271.94	2820.09	833.19	-4951.41	-242.87
3	106	141.43	-3.141e+04	6058.56	2334.73	3090.06	-3759.70	-153.68
3	106	188.57	-3.021e+04	4768.62	2178.63	3699.09	-2726.91	-86.60
3	106	235.71	-2.932e+04	3601.01	2191.81	2802.41	-1766.87	-37.24
3	106	282.86	-2.859e+04	2733.53	2246.89	867.04	-834.46	-14.41
3	106	330.00	-2.745e+04	2457.71	2196.86	-636.16	103.35	-14.95
3	112	0.0	-3.402e+04	8322.71	3447.51	-1.074e+04	-7769.81	-251.86
3	112	47.14	-3.382e+04	8323.21	3447.51	-4059.60	-6110.30	-423.57
3	112	94.29	-3.147e+04	7436.41	2604.95	596.74	-4716.67	-250.42
3	112	141.43	-2.968e+04	6199.50	2168.41	3106.52	-3602.62	-162.85
3	112	188.57	-2.826e+04	4882.94	2048.62	3967.99	-2630.07	-94.26
3	112	235.71	-2.720e+04	3693.47	2093.15	3189.82	-1715.32	-39.86
3	112	282.86	-2.636e+04	2810.00	2176.25	1106.93	-814.11	-12.06
3	112	330.00	-2.518e+04	2527.26	2142.11	-641.55	99.36	-12.71
3	114	0.0	-3.392e+04	8182.82	3477.92	-1.047e+04	-7802.12	-248.10
3	114	47.14	-3.372e+04	8177.17	3477.92	-3882.98	-6128.27	-415.81
3	114	94.29	-3.141e+04	7298.13	2630.25	662.89	-4724.28	-243.85
3	114	141.43	-2.965e+04	6077.52	2187.11	3058.30	-3602.65	-156.98
3	114	188.57	-2.828e+04	4780.80	2060.02	3824.88	-2625.18	-89.84
3	114	235.71	-2.723e+04	3610.49	2095.79	3016.00	-1708.82	-37.88
3	114	282.86	-2.638e+04	2742.81	2169.67	1008.50	-810.00	-12.16
3	114	330.00	-2.519e+04	2467.10	2131.20	-635.32	98.84	-12.81
3	116	0.0	-3.392e+04	8182.82	3477.92	-1.047e+04	-7802.12	-248.10
3	116	47.14	-3.372e+04	8177.17	3477.92	-3882.98	-6128.27	-415.81
3	116	94.29	-3.141e+04	7298.13	2630.25	662.89	-4724.28	-243.85
3	116	141.43	-2.965e+04	6077.52	2187.11	3058.30	-3602.65	-156.98
3	116	188.57	-2.828e+04	4780.80	2060.02	3824.88	-2625.18	-89.84
3	116	235.71	-2.723e+04	3610.49	2095.79	3016.00	-1708.82	-37.88
3	116	282.86	-2.638e+04	2742.81	2169.67	1008.50	-810.00	-12.16
3	116	330.00	-2.519e+04	2467.10	2131.20	-635.32	98.84	-12.81
M_S			**N memb.**	**V memb.**	**V orto**	**M memb.**	**M orto**	**T**
			-6.107e+04	-4362.54	-1136.54	-3.498e+04	-1.325e+04	-1307.36
			-1.162e+04	4.013e+04	7275.13	4.113e+04	652.24	439.39

Macro	Tipo	Angolo 1-Z (gradi)
4	**Setto**	**0.0**

M_S	**Cmb**	**Z**	**N memb.**	**V memb.**	**V orto**	**M memb.**	**M orto**	**T**
		cm	daN	daN	daN	daN m	daN m	daN m
4	4	0.0	-2.792e+04	1.141e+04	2.366e+04	1.366e+04	-1.576e+04	-162.38
4	4	47.14	-2.667e+04	1.195e+04	2.366e+04	1.037e+04	-4260.89	-233.49
4	4	94.29	-2.293e+04	1.075e+04	1.410e+04	7746.48	2029.62	-170.44
4	4	141.43	-1.903e+04	9051.59	6743.20	5653.85	4897.75	-168.87
4	4	188.57	-1.502e+04	7366.30	1658.05	4132.80	5531.42	-181.24
4	4	235.71	-1.098e+04	5973.02	-1885.87	2990.54	4652.10	-200.25
4	4	282.86	-7018.72	5029.00	-4425.75	1936.03	2675.13	-220.35
4	4	330.00	-3491.34	4731.48	-6072.81	560.53	-240.69	-202.14
4	6	0.0	-3.458e+04	1.143e+04	2.487e+04	1.353e+04	-1.722e+04	-173.40
4	6	47.14	-3.270e+04	1.204e+04	2.487e+04	1.056e+04	-5150.34	-230.19
4	6	94.29	-2.809e+04	1.083e+04	1.492e+04	8053.45	1522.22	-166.90
4	6	141.43	-2.319e+04	9116.77	7245.17	5934.32	4620.20	-166.20
4	6	188.57	-1.815e+04	7419.15	1942.68	4346.43	5386.94	-179.33
4	6	235.71	-1.307e+04	6017.46	-1746.43	3127.12	4577.32	-198.84
4	6	282.86	-8136.84	5067.29	-4379.26	1999.21	2630.20	-219.22
4	6	330.00	-3913.64	4765.37	-6062.16	567.38	-272.84	-200.92
4	7	0.0	-3.488e+04	8469.58	2.262e+04	1.020e+04	-1.594e+04	-138.52
4	7	47.14	-3.301e+04	8991.35	2.262e+04	8161.03	-4965.88	-160.38
4	7	94.29	-2.835e+04	7891.27	1.343e+04	6261.53	1038.90	-112.62
4	7	141.43	-2.338e+04	6408.53	6410.93	4555.33	3772.34	-113.04
4	7	188.57	-1.825e+04	4999.90	1638.77	3262.32	4407.64	-123.67
4	7	235.71	-1.310e+04	3896.63	-1566.29	2292.55	3675.71	-138.40
4	7	282.86	-8116.10	3206.68	-3687.20	1455.17	2037.90	-152.97
4	7	330.00	-3864.68	3050.78	-4826.75	480.89	-238.53	-138.36
4	9	0.0	-2.171e+04	6499.28	1.646e+04	7945.74	-1.114e+04	-98.07
4	9	47.14	-2.075e+04	6843.56	1.646e+04	6130.14	-3135.71	-125.91
4	9	94.29	-1.784e+04	6007.21	9701.59	4580.44	1189.47	-89.35
4	9	141.43	-1.478e+04	4879.51	4545.35	3288.35	3115.30	-89.01
4	9	188.57	-1.164e+04	3805.43	1041.65	2345.15	3501.63	-96.60
4	9	235.71	-8472.64	2963.22	-1312.10	1658.44	2884.99	-107.55
4	9	282.86	-5383.06	2437.22	-2872.06	1070.76	1602.18	-118.54
4	9	330.00	-2647.99	2320.68	-3721.07	364.65	-158.76	-107.38
4	33	0.0	-2227.34	4547.96	1.862e+04	7322.47	-1.210e+04	32.37
4	33	47.14	-1295.75	5033.16	1.862e+04	4208.15	-3622.07	-90.00
4	33	94.29	-1244.85	4097.38	1.094e+04	3186.74	2219.84	-40.36
4	33	141.43	-2352.23	2902.68	5196.86	58.34	4439.62	-52.38
4	33	188.57	-1575.92	1706.27	1236.29	2452.74	4931.76	-56.44
4	33	235.71	-849.53	750.66	-1652.83	266.46	4233.14	-65.87
4	33	282.86	-709.73	177.41	-3784.39	64.07	2609.23	-70.27
4	33	330.00	-612.29	277.41	-5472.58	-285.22	123.97	-50.88

Viale Duca Alessandro n. 11 – 43123 Parma
Cell. 335 1403156 – E mail ing.concari@gmail.com
Sito web: studioaire.it – P.IVA 02561480340

4	36	0.0	-4.045e+04	1.443e+04	2.417e+04	1.552e+04	-1.584e+04	-287.51
4	36	47.14	-3.937e+04	1.481e+04	2.417e+04	1.307e+04	-3559.75	-295.41
4	36	94.29	-3.378e+04	1.385e+04	1.507e+04	9675.28	2170.91	-243.35
4	36	141.43	-2.682e+04	1.234e+04	7658.69	9347.03	5415.70	-228.27
4	36	188.57	-2.158e+04	1.082e+04	2238.64	4447.25	6287.17	-244.04
4	36	235.71	-1.620e+04	9499.44	-1773.67	4742.34	5420.32	-265.68
4	36	282.86	-1.031e+04	8506.36	-5053.43	3177.82	3135.58	-294.59
4	36	330.00	-4998.22	7887.48	-7403.18	1187.44	-596.92	-284.80
4	44	0.0	-3.003e+04	2.737e+04	2.048e+04	3.314e+04	-1.373e+04	-670.73
4	44	47.14	-2.903e+04	2.776e+04	2.048e+04	3.079e+04	-4033.59	-694.20
4	44	94.29	-2.477e+04	2.676e+04	1.231e+04	2.454e+04	1309.59	-603.01
4	44	141.43	-2.031e+04	2.506e+04	6063.88	1.958e+04	3878.19	-555.06
4	44	188.57	-1.580e+04	2.305e+04	1659.73	1.552e+04	4606.83	-571.76
4	44	235.71	-1.136e+04	2.102e+04	-1432.24	1.183e+04	3946.23	-612.03
4	44	282.86	-7312.44	1.944e+04	-3743.78	8440.22	2272.67	-675.00
4	44	330.00	-3530.09	1.802e+04	-5269.75	3396.19	-307.30	-659.20
4	50	0.0	-1.967e+04	3.337e+04	1.915e+04	3.440e+04	-1.281e+04	-614.27
4	50	47.14	-1.871e+04	3.377e+04	1.915e+04	3.209e+04	-4229.59	-637.39
4	50	94.29	-1.591e+04	3.279e+04	1.127e+04	2.555e+04	1230.02	-549.21
4	50	141.43	-1.311e+04	3.037e+04	5443.86	2.062e+04	3543.72	-513.26
4	50	188.57	-1.032e+04	2.793e+04	1414.59	1.662e+04	4181.22	-530.99
4	50	235.71	-7547.12	2.566e+04	-1382.65	1.296e+04	3581.61	-566.03
4	50	282.86	-4647.29	2.346e+04	-3377.01	8334.35	2110.90	-633.05
4	50	330.00	-2313.74	2.125e+04	-4731.17	3289.01	-100.21	-632.22
4	65	0.0	-1.316e+04	5330.09	1.822e+04	7409.53	-1.202e+04	-34.84
4	65	47.14	-1.220e+04	5724.94	1.822e+04	5100.93	-3444.34	-101.42
4	65	94.29	-1.055e+04	4859.87	1.080e+04	3833.10	1790.00	-61.38
4	65	141.43	-9342.97	3730.54	5149.03	1744.66	3975.92	-66.73
4	65	188.57	-7241.39	2636.26	1246.22	2312.34	4458.07	-72.48
4	65	235.71	-5149.32	1778.16	-1527.90	967.83	3779.83	-81.98
4	65	282.86	-3359.76	1260.86	-3527.30	576.68	2241.25	-89.35
4	65	330.00	-1782.92	1257.03	-4925.72	69.34	-47.14	-75.00
4	68	0.0	-2.994e+04	1.082e+04	1.711e+04	1.203e+04	-1.161e+04	-198.51
4	68	47.14	-2.898e+04	1.122e+04	1.711e+04	9722.40	-3023.84	-224.86
4	68	94.29	-2.486e+04	1.029e+04	1.019e+04	7239.14	1104.47	-175.24
4	68	141.43	-2.002e+04	8917.26	4831.52	6302.97	3159.07	-167.99
4	68	188.57	-1.592e+04	7555.13	1161.25	3534.34	3589.77	-180.09
4	68	235.71	-1.176e+04	6410.50	-1288.45	3239.26	2951.86	-197.59
4	68	282.86	-7428.48	5598.23	-2955.03	2145.14	1594.89	-218.39
4	68	330.00	-3565.27	5213.23	-3834.20	752.21	-306.97	-206.48
4	76	0.0	-2.530e+04	1.662e+04	1.788e+04	1.994e+04	-1.207e+04	-363.38
4	76	47.14	-2.434e+04	1.701e+04	1.788e+04	1.763e+04	-3478.30	-399.20
4	76	94.29	-2.083e+04	1.606e+04	1.060e+04	1.385e+04	1188.80	-333.05
4	76	141.43	-1.716e+04	1.460e+04	5061.96	1.084e+04	3336.71	-310.97
4	76	188.57	-1.342e+04	1.302e+04	1254.67	8442.25	3851.10	-323.70
4	76	235.71	-9698.31	1.156e+04	-1334.37	6365.16	3225.85	-349.21
4	76	282.86	-6198.97	1.048e+04	-3136.78	4467.41	1816.55	-385.05
4	76	330.00	-3010.89	9742.14	-4208.46	1726.49	-217.85	-370.75
4	82	0.0	-2.072e+04	1.925e+04	1.832e+04	2.056e+04	-1.226e+04	-336.83
4	82	47.14	-1.976e+04	1.964e+04	1.832e+04	1.825e+04	-3674.04	-373.58
4	82	94.29	-1.692e+04	1.870e+04	1.084e+04	1.434e+04	1352.14	-309.35
4	82	141.43	-1.399e+04	1.693e+04	5190.91	1.132e+04	3556.15	-292.78
4	82	188.57	-1.102e+04	1.516e+04	1296.73	8950.62	4093.30	-305.61
4	82	235.71	-8054.79	1.360e+04	-1396.94	6877.50	3461.18	-328.81
4	82	282.86	-5063.21	1.225e+04	-3300.94	4424.03	2003.23	-366.32
4	82	330.00	-2513.33	1.117e+04	-4535.00	1679.72	-143.15	-358.61
4	89	0.0	-2.171e+04	6499.28	1.646e+04	7945.74	-1.114e+04	-98.07
4	89	47.14	-2.075e+04	6843.56	1.646e+04	6130.14	-3135.71	-125.91
4	89	94.29	-1.784e+04	6007.21	9701.59	4580.44	1189.47	-89.35
4	89	141.43	-1.478e+04	4879.51	4545.35	3288.35	3115.30	-89.01
4	89	188.57	-1.164e+04	3805.43	1041.65	2345.15	3501.63	-96.60
4	89	235.71	-8472.64	2963.22	-1312.10	1658.44	2884.99	-107.55
4	89	282.86	-5383.06	2437.22	-2872.06	1070.76	1602.18	-118.54
4	89	330.00	-2647.99	2320.68	-3721.07	364.65	-158.76	-107.38
4	92	0.0	-2.151e+04	8471.64	1.796e+04	1.016e+04	-1.199e+04	-121.33
4	92	47.14	-2.055e+04	8879.13	1.796e+04	7732.04	-3258.69	-172.45
4	92	94.29	-1.767e+04	7966.87	1.069e+04	5775.04	1511.68	-125.54
4	92	141.43	-1.466e+04	6685.00	5101.51	4207.68	3680.54	-124.45
4	92	188.57	-1.157e+04	5418.26	1244.25	3067.89	4154.49	-133.71
4	92	235.71	-8450.66	4377.11	-1432.19	2214.82	3486.06	-147.84
4	92	282.86	-5396.88	3677.63	-3333.44	1433.45	1997.05	-162.70
4	92	330.00	-2680.63	3463.74	-4544.68	422.31	-181.63	-149.08
4	94	0.0	-2.595e+04	8485.32	1.878e+04	1.008e+04	-1.297e+04	-128.68
4	94	47.14	-2.456e+04	8942.28	1.878e+04	7859.94	-3851.66	-170.25
4	94	94.29	-2.111e+04	8021.47	1.124e+04	5979.69	1173.41	-123.18
4	94	141.43	-1.743e+04	6728.45	5436.16	4394.66	3495.51	-122.67
4	94	188.57	-1.365e+04	5453.49	1434.00	3210.31	4058.18	-132.43
4	94	235.71	-9841.00	4406.74	-1339.24	2305.87	3436.21	-146.90
4	94	282.86	-6142.30	3703.16	-3302.45	1475.57	1967.09	-161.95
4	94	330.00	-2962.16	3486.34	-4537.59	426.88	-203.06	-148.26
4	95	0.0	-2.615e+04	6512.96	1.727e+04	7860.63	-1.211e+04	-105.42
4	95	47.14	-2.477e+04	6906.71	1.727e+04	6258.04	-3728.68	-123.71
4	95	94.29	-2.128e+04	6061.81	1.025e+04	4785.08	851.19	-86.99
4	95	141.43	-1.756e+04	4922.96	4880.00	3475.34	2930.27	-87.23
4	95	188.57	-1.372e+04	3840.66	1231.40	2487.57	3405.31	-95.33
4	95	235.71	-9862.99	2992.85	-1219.14	1749.49	2835.14	-106.61
4	95	282.86	-6128.47	2462.75	-2841.08	1112.88	1572.22	-117.78
4	95	330.00	-2929.52	2343.28	-3713.97	369.21	-180.19	-106.56
4	101	0.0	-2.171e+04	6499.28	1.646e+04	7945.74	-1.114e+04	-98.07
4	101	47.14	-2.075e+04	6843.56	1.646e+04	6130.14	-3135.71	-125.91
4	101	94.29	-1.784e+04	6007.21	9701.59	4580.44	1189.47	-89.35
4	101	141.43	-1.478e+04	4879.51	4545.35	3288.35	3115.30	-89.01
4	101	188.57	-1.164e+04	3805.43	1041.65	2345.15	3501.63	-96.60
4	101	235.71	-8472.64	2963.22	-1312.10	1658.44	2884.99	-107.55
4	101	282.86	-5383.06	2437.22	-2872.06	1070.76	1602.18	-118.54
4	101	330.00	-2647.99	2320.68	-3721.07	364.65	-158.76	-107.38
4	107	0.0	-2.260e+04	6502.02	1.662e+04	7928.72	-1.133e+04	-99.54
4	107	47.14	-2.156e+04	6856.19	1.662e+04	6155.72	-3254.31	-125.47

Viale Duca Alessandro n. 11 – 43123 Parma
Cell. 335 1403156 – E mail ing.concari@gmail.com
Sito web: studioaire.it – P.IVA 02561480340

4	107	94.29	-1.853e+04	6018.13	9811.25	4621.36	1121.81	-88.88
4	107	141.43	-1.534e+04	4888.20	4612.28	3325.75	3078.29	-88.65
4	107	188.57	-1.205e+04	3812.47	1079.60	2373.63	3482.37	-96.35
4	107	235.71	-8750.71	2969.15	-1293.51	1676.65	2875.02	-107.36
4	107	282.86	-5532.14	2442.32	-2865.87	1079.19	1596.19	-118.39
4	107	330.00	-2704.29	2325.20	-3719.65	365.56	-163.05	-107.21
4	111	0.0	-2.153e+04	8274.40	1.781e+04	9942.08	-1.190e+04	-119.00
4	111	47.14	-2.057e+04	8675.57	1.781e+04	7571.85	-3246.39	-167.80
4	111	94.29	-1.769e+04	7770.91	1.059e+04	5655.58	1479.46	-121.92
4	111	141.43	-1.467e+04	6504.45	5045.89	4115.75	3624.02	-120.90
4	111	188.57	-1.157e+04	5256.98	1223.99	2995.61	4089.21	-130.00
4	111	235.71	-8452.85	4235.72	-1420.18	2159.18	3425.96	-143.81
4	111	282.86	-5395.50	3553.59	-3287.30	1397.18	1957.56	-158.29
4	111	330.00	-2677.36	3349.44	-4462.32	416.54	-179.34	-144.91
4	112	0.0	-2.153e+04	8274.40	1.781e+04	9942.08	-1.190e+04	-119.00
4	112	47.14	-2.057e+04	8675.57	1.781e+04	7571.85	-3246.39	-167.80
4	112	94.29	-1.769e+04	7770.91	1.059e+04	5655.58	1479.46	-121.92
4	112	141.43	-1.467e+04	6504.45	5045.89	4115.75	3624.02	-120.90
4	112	188.57	-1.157e+04	5256.98	1223.99	2995.61	4089.21	-130.00
4	112	235.71	-8452.85	4235.72	-1420.18	2159.18	3425.96	-143.81
4	112	282.86	-5395.50	3553.59	-3287.30	1397.18	1957.56	-158.29
4	112	330.00	-2677.36	3349.44	-4462.32	416.54	-179.34	-144.91
4	113	0.0	-2.171e+04	6499.28	1.646e+04	7945.74	-1.114e+04	-98.07
4	113	47.14	-2.075e+04	6843.56	1.646e+04	6130.14	-3135.71	-125.91
4	113	94.29	-1.784e+04	6007.21	9701.59	4580.44	1189.47	-89.35
4	113	141.43	-1.478e+04	4879.51	4545.35	3288.35	3115.30	-89.01
4	113	188.57	-1.164e+04	3805.43	1041.65	2345.15	3501.63	-96.60
4	113	235.71	-8472.64	2963.22	-1312.10	1658.44	2884.99	-107.55
4	113	282.86	-5383.06	2437.22	-2872.06	1070.76	1602.18	-118.54
4	113	330.00	-2647.99	2320.68	-3721.07	364.65	-158.76	-107.38
4	114	0.0	-2.155e+04	8077.17	1.766e+04	9720.26	-1.182e+04	-116.68
4	114	47.14	-2.059e+04	8472.02	1.766e+04	7411.66	-3234.09	-163.14
4	114	94.29	-1.770e+04	7574.94	1.049e+04	5536.12	1447.23	-118.31
4	114	141.43	-1.468e+04	6323.90	4990.28	4023.81	3567.49	-117.36
4	114	188.57	-1.158e+04	5095.69	1203.73	2923.34	4023.92	-126.29
4	114	235.71	-8455.05	4094.33	-1408.17	2103.54	3365.85	-139.78
4	114	282.86	-5394.12	3429.55	-3241.16	1360.91	1918.07	-153.87
4	114	330.00	-2674.10	3235.13	-4379.96	410.77	-177.05	-140.74
4	115	0.0	-2.171e+04	6499.28	1.646e+04	7945.74	-1.114e+04	-98.07
4	115	47.14	-2.075e+04	6843.56	1.646e+04	6130.14	-3135.71	-125.91
4	115	94.29	-1.784e+04	6007.21	9701.59	4580.44	1189.47	-89.35
4	115	141.43	-1.478e+04	4879.51	4545.35	3288.35	3115.30	-89.01
4	115	188.57	-1.164e+04	3805.43	1041.65	2345.15	3501.63	-96.60
4	115	235.71	-8472.64	2963.22	-1312.10	1658.44	2884.99	-107.55
4	115	282.86	-5383.06	2437.22	-2872.06	1070.76	1602.18	-118.54
4	115	330.00	-2647.99	2320.68	-3721.07	364.65	-158.76	-107.38
4	116	0.0	-2.155e+04	8077.17	1.766e+04	9720.26	-1.182e+04	-116.68
4	116	47.14	-2.059e+04	8472.02	1.766e+04	7411.66	-3234.09	-163.14
4	116	94.29	-1.770e+04	7574.94	1.049e+04	5536.12	1447.23	-118.31
4	116	141.43	-1.468e+04	6323.90	4990.28	4023.81	3567.49	-117.36
4	116	188.57	-1.158e+04	5095.69	1203.73	2923.34	4023.92	-126.29
4	116	235.71	-8455.05	4094.33	-1408.17	2103.54	3365.85	-139.78
4	116	282.86	-5394.12	3429.55	-3241.16	1360.91	1918.07	-153.87
4	116	330.00	-2674.10	3235.13	-4379.96	410.77	-177.05	-140.74
M_S			**N memb.**	**V memb.**	**V orto**	**M memb.**	**M orto**	**T**
			-4.045e+04	177.41	-7403.18	-285.22	-1.722e+04	-694.20
			-612.29	3.377e+04	2.487e+04	3.440e+04	6287.17	32.37

Macro	Tipo	Angolo 1-Z (gradi)
5	**Setto**	**0.0**

M_S	**Cmb**	**Z**	**N memb.**	**V memb.**	**V orto**	**M memb.**	**M orto**	**T**
		cm	daN	daN	daN	daN m	daN m	daN m
5	5	0.0	-1.082e+04	-2067.80	-2192.67	-5547.42	1367.21	-342.90
5	5	47.14	-1.111e+04	-2682.17	-2192.67	-4292.47	375.57	-90.43
5	5	94.29	-1.000e+04	-3541.76	-946.54	-3180.37	-11.60	160.64
5	5	141.43	-7993.17	-4108.39	-246.05	-2180.95	-110.12	103.06
5	5	188.57	-5545.76	-4495.01	43.51	-1179.77	-94.11	-12.82
5	5	235.71	-2995.01	-4809.69	111.70	-69.38	-13.22	-73.43
5	5	282.86	-1666.41	-2945.69	220.72	243.58	7.07	-20.78
5	5	330.00	-1085.09	-1592.50	257.46	287.14	66.19	-62.90
5	7	0.0	-1.082e+04	-2067.80	-2192.67	-5547.42	1367.21	-342.90
5	7	47.14	-1.111e+04	-2682.17	-2192.67	-4292.47	375.57	-90.43
5	7	94.29	-1.000e+04	-3541.76	-946.54	-3180.37	-11.60	160.64
5	7	141.43	-7993.17	-4108.39	-246.05	-2180.95	-110.12	103.06
5	7	188.57	-5545.76	-4495.01	43.51	-1179.77	-94.11	-12.82
5	7	235.71	-2995.01	-4809.69	111.70	-69.38	-13.22	-73.43
5	7	282.86	-1666.41	-2945.69	220.72	243.58	7.07	-20.78
5	7	330.00	-1085.09	-1592.50	257.46	287.14	66.19	-62.90
5	8	0.0	-1.101e+04	-1359.19	-2106.64	-5188.16	1315.40	-337.84
5	8	47.14	-1.146e+04	-1924.09	-2106.64	-4202.55	365.38	-97.69
5	8	94.29	-1.065e+04	-2766.79	-909.74	-3299.67	-6.82	144.28
5	8	141.43	-9015.42	-3323.42	-228.79	-2481.75	-99.51	90.62
5	8	188.57	-6904.16	-3690.12	55.98	-1686.91	-79.38	-16.64
5	8	235.71	-4482.17	-3941.91	114.11	-903.79	2.21	-67.42
5	8	282.86	-2117.73	-4012.09	198.76	-21.57	14.65	-15.77
5	8	330.00	-1096.74	-2223.50	235.00	295.01	68.66	-62.05
5	9	0.0	-6617.62	-776.89	-1304.60	-3183.79	814.63	-207.96
5	9	47.14	-6945.44	-1120.89	-1304.60	-2579.61	226.15	-59.72
5	9	94.29	-6455.12	-1633.86	-562.24	-2022.71	-3.66	90.59
5	9	141.43	-5459.70	-1972.41	-142.98	-1518.05	-61.55	58.09
5	9	188.57	-4179.61	-2195.92	31.42	-1024.75	-50.37	-7.78

Viale Duca Alessandro n. 11 – 43123 Parma
Cell. 335 1403156 – E mail ing.concari@gmail.com
Sito web: studioaire.it – P.IVA 02561480340

5	9	235.71	-2731.71	-2354.45	67.53	-526.88	-1.40	-38.85
5	9	282.86	-1299.13	-2109.74	120.23	-14.03	5.33	-5.74
5	9	330.00	-659.85	-1155.64	142.53	148.01	36.75	-29.40
5	29	0.0	-1.307e+04	-5882.88	-1332.03	-5032.14	813.12	-316.68
5	29	47.14	-1.367e+04	-6142.27	-1332.03	-4872.05	280.89	-182.31
5	29	94.29	-1.105e+04	-6894.61	-535.71	-3142.56	38.98	-36.37
5	29	141.43	-7707.09	-7222.45	-145.03	-1985.24	-49.97	-42.10
5	29	188.57	-2844.97	-7454.89	92.00	-678.72	-22.49	-77.33
5	29	235.71	388.51	-7666.59	238.42	572.53	74.15	29.79
5	29	282.86	75.85	-2832.98	153.48	978.59	56.63	156.44
5	29	330.00	-90.49	-86.17	179.00	596.78	64.85	145.21
5	41	0.0	-7935.94	-6608.62	-1279.65	-3691.64	719.67	-262.80
5	41	47.14	-9006.36	-6732.14	-1279.65	-4232.56	286.86	-143.21
5	41	94.29	-5709.68	-7344.37	-492.01	-2332.19	31.51	-2.45
5	41	141.43	-2660.37	-7356.54	-120.71	-1298.10	-47.26	2.25
5	41	188.57	618.29	-7313.43	61.02	-101.81	-31.45	-43.98
5	41	235.71	4421.35	-7234.50	144.42	819.08	31.89	-5.12
5	41	282.86	2240.04	-311.48	111.96	1405.74	25.66	52.04
5	41	330.00	1088.47	2731.72	67.80	874.15	39.98	43.70
5	44	0.0	-5299.45	8386.26	-953.97	-839.85	682.13	-130.06
5	44	47.14	-5642.67	8055.77	-953.97	-325.89	115.89	-6.33
5	44	94.29	-9458.01	7729.31	-468.68	-2070.00	-20.85	115.47
5	44	141.43	-1.232e+04	7117.32	-88.63	-2928.81	-31.50	63.66
5	44	188.57	-1.468e+04	6718.90	56.54	-4083.97	-6.83	16.51
5	44	235.71	-1.632e+04	6600.85	2.57	-5489.64	30.73	-41.00
5	44	282.86	-6805.42	-8310.57	31.49	-2586.80	16.77	-36.72
5	44	330.00	-2451.66	-7669.57	116.91	-546.65	42.72	-92.80
5	46	0.0	-8777.52	6441.17	-993.13	-1812.81	705.24	-188.45
5	46	47.14	-9184.22	6123.55	-993.13	-1352.28	138.07	-66.25
5	46	94.29	-1.236e+04	5662.69	-467.66	-2663.78	-4.60	54.67
5	46	141.43	-1.418e+04	4984.84	-95.69	-3212.23	-29.93	11.44
5	46	188.57	-1.515e+04	4522.34	90.11	-4006.75	3.77	-22.86
5	46	235.71	-1.585e+04	4322.43	100.90	-5039.97	68.92	-6.25
5	46	282.86	-6704.15	-8795.89	53.34	-2247.22	43.53	51.43
5	46	330.00	-2474.35	-7648.83	159.28	-418.18	59.21	1.85
5	58	0.0	-9612.36	-1307.08	-1253.28	-3678.73	796.72	-243.62
5	58	47.14	-1.002e+04	-1624.70	-1253.28	-3218.20	227.80	-105.98
5	58	94.29	-9572.06	-2218.01	-533.34	-2608.50	11.50	36.08
5	58	141.43	-8187.58	-2623.22	-135.78	-2041.73	-50.92	11.12
5	58	188.57	-5978.43	-2898.25	64.67	-1442.64	-29.25	-36.12
5	58	235.71	-4211.32	-3086.61	138.44	-963.96	41.02	-5.19
5	58	282.86	-1906.78	-3765.51	121.92	-84.31	32.15	68.54
5	58	330.00	-845.92	-2114.10	165.74	191.75	52.24	44.51
5	61	0.0	-9602.26	-3179.67	-1328.56	-4105.69	822.69	-256.88
5	61	47.14	-1.001e+04	-3497.29	-1328.56	-3645.16	253.44	-113.10
5	61	94.29	-8489.94	-4120.44	-554.82	-2526.76	15.06	35.99
5	61	141.43	-6377.46	-4457.06	-146.25	-1701.14	-57.51	14.72
5	61	188.57	-3431.33	-4687.72	56.04	-809.69	-39.54	-38.79
5	61	235.71	-1151.34	-4879.30	142.01	79.27	30.17	-10.37
5	61	282.86	-631.29	-2312.75	137.99	463.10	27.08	64.22
5	61	330.00	-412.73	-612.52	162.20	345.81	49.03	46.47
5	73	0.0	-7552.94	-4361.98	-1401.44	-4019.98	837.92	-239.61
5	73	47.14	-7959.64	-4679.60	-1401.44	-3559.45	270.41	-89.29
5	73	94.29	-5708.73	-5264.40	-578.53	-2116.64	8.25	67.03
5	73	141.43	-3262.76	-5475.44	-155.00	-1139.04	-66.73	46.00
5	73	188.57	-590.45	-5606.54	29.22	-57.41	-58.51	-22.17
5	73	235.71	2156.06	-5737.02	97.75	1053.97	-4.01	-34.54
5	73	282.86	792.05	-195.63	143.63	928.99	6.02	10.65
5	73	330.00	113.80	1235.87	137.95	461.73	36.22	-2.00
5	89	0.0	-6617.62	-776.89	-1304.60	-3183.79	814.63	-207.96
5	89	47.14	-6945.44	-1120.89	-1304.60	-2579.61	226.15	-59.72
5	89	94.29	-6455.12	-1633.86	-562.24	-2022.71	-3.66	90.59
5	89	141.43	-5459.70	-1972.41	-142.98	-1518.05	-61.55	58.09
5	89	188.57	-4179.61	-2195.92	31.42	-1024.75	-50.37	-7.78
5	89	235.71	-2731.71	-2354.45	67.53	-526.88	-1.40	-38.85
5	89	282.86	-1299.13	-2109.74	120.23	-14.03	5.33	-5.74
5	89	330.00	-659.85	-1155.64	142.53	148.01	36.75	-29.40
5	93	0.0	-8092.64	-1482.12	-1635.73	-4122.78	1020.09	-256.33
5	93	47.14	-8335.30	-1937.56	-1635.73	-3205.59	280.53	-68.25
5	93	94.29	-7527.69	-2579.02	-705.99	-2389.94	-8.22	119.18
5	93	141.43	-6056.74	-3001.92	-183.10	-1656.37	-81.62	76.45
5	93	188.57	-4254.46	-3289.47	33.20	-923.15	-69.46	-9.59
5	93	235.71	-2360.90	-3520.39	83.47	-116.51	-9.00	-54.14
5	93	282.86	-1284.16	-2245.09	163.18	160.51	5.42	-14.62
5	93	330.00	-811.37	-1215.75	190.64	211.16	49.03	-45.85
5	95	0.0	-8092.64	-1482.12	-1635.73	-4122.79	1020.09	-256.33
5	95	47.14	-8335.30	-1937.56	-1635.73	-3205.59	280.53	-68.25
5	95	94.29	-7527.69	-2579.02	-705.99	-2389.94	-8.22	119.18
5	95	141.43	-6056.74	-3001.92	-183.10	-1656.37	-81.62	76.45
5	95	188.57	-4254.46	-3289.47	33.20	-923.15	-69.46	-9.59
5	95	235.71	-2360.90	-3520.39	83.47	-116.51	-9.00	-54.14
5	95	282.86	-1284.16	-2245.09	163.18	160.51	5.42	-14.62
5	95	330.00	-811.37	-1215.75	190.64	211.16	49.03	-45.85
5	96	0.0	-8222.45	-1009.71	-1578.38	-3883.28	985.55	-252.95
5	96	47.14	-8563.70	-1432.18	-1578.38	-3145.65	273.74	-73.09
5	96	94.29	-7960.70	-2062.38	-681.46	-2469.48	-5.04	108.27
5	96	141.43	-6738.24	-2478.60	-171.59	-1856.91	-74.54	68.16
5	96	188.57	-5160.05	-2752.87	41.51	-1261.24	-59.64	-12.13
5	96	235.71	-3352.34	-2941.87	85.08	-672.78	1.29	-50.13
5	96	282.86	-1585.04	-2956.02	148.54	-16.25	10.47	-11.28
5	96	330.00	-819.14	-1636.42	175.67	216.41	50.68	-45.28
5	101	0.0	-6617.62	-776.89	-1304.60	-3183.79	814.63	-207.96
5	101	47.14	-6945.44	-1120.89	-1304.60	-2579.61	226.15	-59.72
5	101	94.29	-6455.12	-1633.86	-562.24	-2022.71	-3.66	90.59
5	101	141.43	-5459.70	-1972.41	-142.98	-1518.05	-61.55	58.09
5	101	188.57	-4179.61	-2195.92	31.42	-1024.75	-50.37	-7.78
5	101	235.71	-2731.71	-2354.45	67.53	-526.88	-1.40	-38.85
5	101	282.86	-1299.13	-2109.74	120.23	-14.03	5.33	-5.74

Viale Duca Alessandro n. 11 – 43123 Parma
Cell. 335 1403156 – E mail ing.concari@gmail.com
Sito web: studioaire.it – P.IVA 02561480340

5	101	330.00	-659.85	-1155.64	142.53	148.01	36.75	-29.40
5	105	0.0	-6912.62	-917.94	-1370.82	-3371.59	855.72	-217.63
5	105	47.14	-7223.41	-1284.23	-1370.82	-2704.81	237.02	-61.43
5	105	94.29	-6669.64	-1822.89	-590.99	-2096.15	-4.57	96.31
5	105	141.43	-5579.11	-2178.31	-151.00	-1545.72	-65.56	61.76
5	105	188.57	-4194.58	-2414.63	31.78	-1004.43	-54.19	-8.14
5	105	235.71	-2657.55	-2587.64	70.71	-444.81	-2.92	-41.91
5	105	282.86	-1296.14	-2136.81	128.82	20.88	5.35	-7.52
5	105	330.00	-690.15	-1167.66	152.16	160.64	39.21	-32.69
5	108	0.0	-7016.47	-540.01	-1324.94	-3179.98	828.09	-214.93
5	108	47.14	-7406.14	-879.92	-1324.94	-2656.85	231.59	-65.30
5	108	94.29	-7016.05	-1409.57	-571.37	-2159.78	-2.03	87.58
5	108	141.43	-6124.30	-1759.66	-141.80	-1706.14	-59.90	55.13
5	108	188.57	-4919.05	-1985.36	38.43	-1274.90	-46.33	-10.18
5	108	235.71	-3450.70	-2124.82	72.00	-889.82	5.31	-38.70
5	108	282.86	-1536.84	-2705.55	117.11	-120.54	9.39	-4.85
5	108	330.00	-696.37	-1504.20	140.18	164.84	40.53	-32.24
5	112	0.0	-6734.45	-351.73	-1252.98	-2968.23	783.54	-204.92
5	112	47.14	-7151.01	-666.05	-1252.98	-2525.66	220.03	-64.08
5	112	94.29	-6844.84	-1168.87	-540.16	-2094.29	-0.80	80.77
5	112	141.43	-6073.05	-1501.42	-132.62	-1698.53	-55.18	50.63
5	112	188.57	-4994.64	-1712.99	38.90	-1329.03	-41.54	-10.08
5	112	235.71	-3624.01	-1833.78	68.98	-1027.53	7.85	-35.25
5	112	282.86	-1569.93	-2749.57	107.06	-173.12	9.88	-2.74
5	112	330.00	-666.84	-1534.24	129.06	152.73	38.24	-28.89
5	113	0.0	-6617.62	-776.89	-1304.60	-3183.79	814.63	-207.96
5	113	47.14	-6945.44	-1120.89	-1304.60	-2579.61	226.15	-59.72
5	113	94.29	-6455.12	-1633.86	-562.24	-2022.71	-3.66	90.59
5	113	141.43	-5459.70	-1972.41	-142.98	-1518.05	-61.55	58.09
5	113	188.57	-4179.61	-2195.92	31.42	-1024.75	-50.37	-7.78
5	113	235.71	-2731.71	-2354.45	67.53	-526.88	-1.40	-38.85
5	113	282.86	-1299.13	-2109.74	120.23	-14.03	5.33	-5.74
5	113	330.00	-659.85	-1155.64	142.53	148.01	36.75	-29.40
5	116	0.0	-6721.46	-398.97	-1258.72	-2992.19	786.99	-205.26
5	116	47.14	-7128.17	-716.59	-1258.72	-2531.65	220.71	-63.60
5	116	94.29	-6801.54	-1220.54	-542.62	-2086.34	-1.11	81.86
5	116	141.43	-6004.90	-1553.76	-133.77	-1678.48	-55.89	51.45
5	116	188.57	-4904.08	-1766.65	38.07	-1295.22	-42.52	-9.82
5	116	235.71	-3524.86	-1891.64	68.81	-971.90	6.83	-35.65
5	116	282.86	-1539.84	-2678.48	108.52	-155.44	9.37	-3.07
5	116	330.00	-666.06	-1492.17	130.56	152.21	38.07	-28.95
M_S			**N memb.**	**V memb.**	**V orto**	**M memb.**	**M orto**	**T**
			-1.632e+04	-8795.89	-2192.67	-5547.42	-110.12	-342.90
			4421.35	8386.26	257.46	1405.74	1367.21	160.64

Macro	Tipo	Angolo 1-Z (gradi)
6	**Setto**	**0.0**

M_S	**Cmb**	**Z**	**N memb.**	**V memb.**	**V orto**	**M memb.**	**M orto**	**T**
		cm	daN	daN	daN	daN m	daN m	daN m
6	2	235.71	259.01	-262.13	3.22	1140.56	-0.69	263.03
6	2	282.86	-925.35	-2898.07	3.22	516.79	-2.52	263.09
6	2	330.00	-748.08	-1429.06	12.28	31.73	1.72	200.50
6	5	235.71	403.37	-3690.25	-0.97	-571.82	-9.73	332.61
6	5	282.86	-681.40	-8197.15	-0.97	-637.48	-15.59	322.93
6	5	330.00	-716.57	-5078.81	23.86	40.58	0.03	238.26
6	7	235.71	403.37	-3690.25	-0.97	-571.82	-9.73	332.61
6	7	282.86	-681.40	-8197.15	-0.97	-637.48	-15.59	322.93
6	7	330.00	-716.57	-5078.81	23.86	40.58	0.03	238.26
6	33	235.71	301.79	-9331.39	-58.62	-1904.17	118.65	407.44
6	33	282.86	-653.54	-1.085e+04	-58.62	-2652.14	104.56	425.04
6	33	330.00	-467.93	-9845.88	-391.13	-1231.44	47.46	386.94
6	44	235.71	-968.96	1.902e+04	16.40	8547.13	-39.21	119.22
6	44	282.86	-1860.69	1.671e+04	16.40	8180.12	-35.65	117.57
6	44	330.00	-1408.68	1.687e+04	171.50	2710.80	-10.41	64.04
6	46	235.71	-1004.96	1.515e+04	-25.24	7406.84	31.94	238.52
6	46	282.86	-1902.79	1.300e+04	-25.24	7009.30	26.53	246.45
6	46	330.00	-1436.27	1.312e+04	-75.15	2251.41	16.84	196.90
6	47	235.71	1190.72	-1.095e+04	37.37	-2905.47	-21.93	154.58
6	47	282.86	107.36	-1.117e+04	37.37	-4440.56	-14.47	155.08
6	47	330.00	263.67	-1.071e+04	84.42	-2202.43	-11.11	116.68
6	65	235.71	287.49	-5165.95	-26.22	-913.34	49.72	294.93
6	65	282.86	-610.35	-7311.80	-26.22	-1310.88	41.70	301.03
6	65	330.00	-524.29	-5894.27	-165.11	-529.08	20.99	255.62
6	73	235.71	743.66	-9317.96	-4.53	-2878.54	14.97	240.83
6	73	282.86	-154.17	-1.146e+04	-4.53	-3276.08	10.74	240.33
6	73	330.00	-205.22	-9665.32	-60.43	-1159.78	6.06	193.35
6	78	235.71	-322.73	6369.26	-10.32	3629.64	13.33	218.36
6	78	282.86	-1220.57	4223.41	-10.32	3232.10	9.90	221.70
6	78	330.00	-954.28	4976.15	-27.59	1006.68	8.04	172.64
6	79	235.71	756.67	-7510.05	13.67	-2333.14	-16.34	188.19
6	79	282.86	-141.17	-9655.89	13.67	-2730.68	-16.64	183.50
6	79	330.00	-193.84	-7898.57	47.89	-958.39	-6.00	134.86
6	90	235.71	206.95	-361.97	2.13	777.75	-0.95	202.74
6	90	282.86	-698.36	-2441.00	2.13	333.70	-2.56	202.47
6	90	330.00	-574.85	-1256.64	9.75	24.29	1.19	154.02
6	93	235.71	303.18	-2647.38	-0.66	-363.84	-6.99	249.13
6	93	282.86	-535.72	-5973.73	-0.66	-435.82	-11.28	242.37
6	93	330.00	-553.83	-3689.81	17.47	30.20	0.06	179.20
6	95	235.71	303.18	-2647.38	-0.66	-363.84	-6.99	249.13
6	95	282.86	-535.72	-5973.73	-0.66	-435.82	-11.28	242.37
6	95	330.00	-553.83	-3689.81	17.47	30.20	0.06	179.20

Viale Duca Alessandro n. 11 – 43123 Parma
Cell. 335 1403156 – E mail ing.concari@gmail.com
Sito web: studioaire.it – P.IVA 02561480340

6	105	235.71	266.27	-1652.77	-0.24	31.46	-4.38	214.16
6	105	282.86	-595.87	-4248.50	-0.24	-152.15	-7.55	210.96
6	105	330.00	-567.50	-2561.57	12.89	24.88	0.28	157.98
6	107	235.71	266.27	-1652.77	-0.24	31.46	-4.38	214.16
6	107	282.86	-595.87	-4248.50	-0.24	-152.15	-7.55	210.96
6	107	330.00	-567.50	-2561.57	12.89	24.88	0.28	157.98
6	111	235.71	211.96	-466.18	1.90	713.00	-1.23	203.01
6	111	282.86	-689.61	-2578.62	1.90	292.20	-2.97	202.54
6	111	330.00	-574.45	-1358.93	9.95	24.22	1.10	153.89
6	113	235.71	257.04	-1404.12	-0.13	130.28	-3.72	205.41
6	113	282.86	-610.91	-3817.19	-0.13	-81.24	-6.61	203.11
6	113	330.00	-570.92	-2279.51	11.74	23.55	0.33	152.67
6	114	235.71	216.97	-570.40	1.68	648.25	-1.51	203.28
6	114	282.86	-680.87	-2716.24	1.68	250.71	-3.37	202.60
6	114	330.00	-574.06	-1461.21	10.15	24.15	1.02	153.75
6	115	235.71	257.04	-1404.12	-0.13	130.28	-3.72	205.41
6	115	282.86	-610.91	-3817.19	-0.13	-81.24	-6.61	203.11
6	115	330.00	-570.92	-2279.51	11.74	23.55	0.33	152.67
M_S			**N memb.**	**V memb.**	**V orto**	**M memb.**	**M orto**	**T**
			-1902.79	-1.146e+04	-391.13	-4440.56	-39.21	64.04
			1190.72	1.902e+04	171.50	8547.13	118.65	425.04

Macro	Tipo	Angolo 1-Z (gradi)
8	**Setto**	**0.0**

M_S	**Cmb**	**Z**	**N memb.**	**V memb.**	**V orto**	**M memb.**	**M orto**	**T**
		cm	daN	daN	daN	daN m	daN m	daN m
8	4	0.0	-1.256e+04	1782.91	-320.88	2330.72	528.07	7.65
8	4	47.14	-1.256e+04	1782.91	-320.88	1504.09	415.48	-15.01
8	4	94.29	-1.237e+04	1782.91	-207.69	664.17	302.88	-11.89
8	4	141.43	-1.217e+04	1782.91	-199.82	-176.28	190.29	-12.16
8	4	188.57	-1.198e+04	1782.91	-194.13	-1016.91	77.70	-11.87
8	4	235.71	-1.179e+04	1782.91	-65.14	-1858.29	-34.90	2.19
8	4	282.86	-4065.44	167.22	-41.86	-35.82	-7.04	25.13
8	4	330.00	-198.38	632.16	-32.20	4.44	-6.23	23.08
8	8	0.0	-1.542e+04	1860.48	-417.96	2447.82	681.97	11.57
8	8	47.14	-1.542e+04	1860.48	-417.96	1585.22	532.34	-14.50
8	8	94.29	-1.523e+04	1860.48	-275.43	708.76	382.72	-11.29
8	8	141.43	-1.504e+04	1860.48	-265.49	-168.25	233.10	-11.65
8	8	188.57	-1.484e+04	1860.48	-257.37	-1045.45	83.47	-11.40
8	8	235.71	-1.465e+04	1860.48	-76.74	-1923.43	-66.15	1.67
8	8	282.86	-5076.95	231.95	-37.02	-38.28	-12.27	24.51
8	8	330.00	-204.66	639.68	-31.77	5.01	-7.79	24.69
8	10	0.0	-9701.90	1469.16	-243.44	1915.03	402.17	5.41
8	10	47.14	-9701.90	1469.16	-243.44	1233.87	317.19	-12.23
8	10	94.29	-9554.58	1469.16	-156.84	541.76	232.21	-9.73
8	10	141.43	-9407.26	1469.16	-150.82	-150.79	147.23	-9.93
8	10	188.57	-9259.93	1469.16	-146.63	-843.49	62.25	-9.69
8	10	235.71	-9112.61	1469.16	-50.68	-1536.81	-22.73	1.78
8	10	282.86	-3140.38	145.01	-35.05	-29.42	-4.75	20.28
8	10	330.00	-152.17	539.27	-26.68	3.53	-4.83	18.09
8	38	0.0	-1.701e+04	2606.15	18.82	1667.98	320.72	3.99
8	38	47.14	-1.701e+04	2606.15	18.82	1078.40	229.81	-6.78
8	38	94.29	-1.679e+04	2592.83	41.80	479.36	256.23	-3.91
8	38	141.43	-1.656e+04	2578.27	-19.49	-120.07	263.99	-4.83
8	38	188.57	-1.634e+04	2562.36	-85.34	-719.62	219.66	-1.19
8	38	235.71	-1.612e+04	2545.08	-48.21	-1319.71	152.53	-5.25
8	38	282.86	-6137.26	-392.65	-139.25	-25.65	61.16	0.37
8	38	330.00	-1010.03	874.38	-173.58	3.30	9.89	-0.80
8	40	0.0	-4228.30	2181.46	-561.96	1677.74	567.69	1.41
8	40	47.14	-4228.30	2181.46	-561.96	1087.35	481.03	-14.16
8	40	94.29	-4150.56	2174.84	-405.84	487.47	260.04	-12.28
8	40	141.43	-4072.72	2166.93	-332.52	-112.79	57.45	-12.05
8	40	188.57	-3994.75	2157.67	-257.90	-713.17	-93.29	-14.81
8	40	235.71	-3916.66	2147.03	-87.38	-1314.09	-221.42	3.78
8	40	282.86	-829.95	-456.60	83.87	-26.03	-75.83	22.65
8	40	330.00	793.41	745.48	85.86	3.51	-23.77	19.68
8	43	0.0	-5965.04	-1495.28	-219.76	3279.55	283.14	2.48
8	43	47.14	-5965.04	-1495.28	-219.76	2090.59	217.55	-23.84
8	43	94.29	-5846.50	-1448.72	-122.98	882.45	144.77	-17.59
8	43	141.43	-5727.84	-1395.04	-98.37	-326.43	79.54	-19.72
8	43	188.57	-5609.05	-1333.81	-76.33	-1535.57	27.96	-22.21
8	43	235.71	-5490.12	-1264.90	-0.32	-2745.81	-15.88	12.38
8	43	282.86	-1647.88	2281.46	-42.56	-50.09	-12.64	59.42
8	43	330.00	-19.77	-176.04	63.39	4.66	-2.07	54.15
8	44	0.0	-9440.80	5780.08	-396.47	1670.91	552.05	-7.23
8	44	47.14	-9440.80	5780.08	-396.47	1081.09	464.87	-16.76
8	44	94.29	-9305.16	5715.87	-289.44	481.79	311.04	-11.86
8	44	141.43	-9169.55	5644.42	-264.61	-117.88	164.24	-14.79
8	44	188.57	-9033.98	5565.27	-240.72	-717.69	31.22	-13.45
8	44	235.71	-8898.45	5478.32	-118.98	-1318.03	-96.91	-7.74
8	44	282.86	-2965.43	-2086.26	8.55	-25.76	-29.20	-0.94
8	44	330.00	245.76	1917.31	-65.21	3.36	-17.64	-5.72
8	70	0.0	-1.287e+04	1861.11	-129.76	1667.98	369.07	5.21
8	70	47.14	-1.287e+04	1861.11	-129.76	1078.40	279.62	-9.08
8	70	94.29	-1.269e+04	1854.99	-71.34	479.36	243.71	-6.54
8	70	141.43	-1.251e+04	1848.36	-95.43	-120.07	197.64	-7.05
8	70	188.57	-1.233e+04	1841.16	-122.20	-719.62	128.89	-5.33
8	70	235.71	-1.215e+04	1833.40	-48.52	-1319.71	50.05	-1.44
8	70	282.86	-4444.27	-110.26	-77.83	-25.65	23.63	10.41
8	70	330.00	-529.19	628.97	-89.37	3.30	1.71	9.35
8	72	0.0	-6785.29	1673.18	-386.39	1667.98	478.61	4.08

Viale Duca Alessandro n. 11 – 43123 Parma
Cell. 335 1403156 – E mail ing.concari@gmail.com
Sito web: studioaire.it – P.IVA 02561480340

8	72	47.14	-6785.29	1673.18	-386.39	1078.40	391.69	-12.51
8	72	94.29	-6668.91	1670.04	-269.92	479.36	243.71	-10.36
8	72	141.43	-6552.48	1666.37	-233.86	-120.07	105.79	-10.38
8	72	188.57	-6435.98	1662.13	-198.19	-719.62	-9.57	-11.49
8	72	235.71	-6319.42	1657.32	-66.94	-1319.71	-114.94	2.27
8	72	282.86	-1946.22	-144.47	20.77	-25.65	-36.78	20.15
8	72	330.00	264.76	577.82	24.39	3.30	-13.21	18.27
8	75	0.0	-8077.48	-519.06	-259.44	1667.98	380.29	7.68
8	75	47.14	-8077.48	-519.06	-259.44	1078.40	292.06	-12.45
8	75	94.29	-7943.29	-497.71	-163.52	479.36	200.12	-9.03
8	75	141.43	-7809.04	-473.39	-148.78	-120.07	112.09	-10.14
8	75	188.57	-7674.72	-445.89	-135.31	-719.62	30.00	-11.19
8	75	235.71	-7540.34	-415.15	-24.36	-1319.71	-48.57	6.03
8	75	282.86	-2502.81	975.53	-18.52	-25.65	-13.02	31.00
8	75	330.00	-100.40	-152.18	26.95	3.30	-3.33	31.81
8	76	0.0	-9412.45	3258.99	-314.40	1667.98	472.62	0.17
8	76	47.14	-9412.45	3258.99	-314.40	1078.40	385.02	-13.51
8	76	94.29	-9270.06	3229.89	-218.66	479.36	267.48	-10.05
8	76	141.43	-9127.70	3197.77	-204.22	-120.07	153.61	-11.46
8	76	188.57	-8985.34	3162.40	-191.08	-719.62	45.72	-10.77
8	76	235.71	-8843.01	3123.73	-80.46	-1319.71	-60.09	-2.63
8	76	282.86	-3004.83	-857.45	-12.52	-25.65	-16.21	9.85
8	76	330.00	25.36	1090.20	-41.76	3.30	-10.45	7.20
8	90	0.0	-9641.13	1328.05	-248.33	1738.56	408.00	6.10
8	90	47.14	-9641.13	1328.05	-248.33	1122.82	320.67	-11.24
8	90	94.29	-9493.80	1328.05	-161.06	497.19	233.33	-8.89
8	90	141.43	-9346.48	1328.05	-154.99	-128.85	146.00	-9.10
8	90	188.57	-9199.16	1328.05	-150.53	-755.01	58.66	-8.89
8	90	235.71	-9051.84	1328.05	-49.85	-1381.74	-28.67	1.64
8	90	282.86	-3121.43	121.35	-30.93	-26.73	-5.71	18.91
8	90	330.00	-152.79	462.72	-23.92	3.37	-4.78	17.61
8	92	0.0	-9641.13	1328.05	-248.33	1738.56	408.00	6.10
8	92	47.14	-9641.13	1328.05	-248.33	1122.82	320.67	-11.24
8	92	94.29	-9493.80	1328.05	-161.06	497.19	233.33	-8.89
8	92	141.43	-9346.48	1328.05	-154.99	-128.85	146.00	-9.10
8	92	188.57	-9199.16	1328.05	-150.53	-755.01	58.66	-8.89
8	92	235.71	-9051.84	1328.05	-49.85	-1381.74	-28.67	1.64
8	92	282.86	-3121.44	121.35	-30.93	-26.73	-5.71	18.91
8	92	330.00	-152.79	462.72	-23.92	3.37	-4.78	17.61
8	96	0.0	-1.155e+04	1379.77	-313.06	1816.63	510.60	8.71
8	96	47.14	-1.155e+04	1379.77	-313.06	1176.91	398.58	-10.90
8	96	94.29	-1.140e+04	1379.77	-206.22	526.91	286.56	-8.49
8	96	141.43	-1.125e+04	1379.77	-198.77	-123.50	174.54	-8.76
8	96	188.57	-1.111e+04	1379.77	-192.69	-774.04	62.51	-8.57
8	96	235.71	-1.096e+04	1379.77	-57.59	-1425.17	-49.51	1.30
8	96	282.86	-3795.77	164.50	-27.70	-28.36	-9.20	18.49
8	96	330.00	-156.98	467.74	-23.64	3.74	-5.81	18.68
8	108	0.0	-9998.19	1281.95	-263.24	1683.59	430.85	6.89
8	108	47.14	-9998.19	1281.95	-263.24	1089.22	337.64	-10.78
8	108	94.29	-9850.87	1281.95	-171.78	485.30	244.43	-8.48
8	108	141.43	-9703.55	1281.95	-165.41	-119.00	151.21	-8.70
8	108	188.57	-9556.23	1281.95	-160.53	-723.43	58.00	-8.50
8	108	235.71	-9408.91	1281.95	-51.07	-1328.40	-35.21	1.52
8	108	282.86	-3248.73	120.52	-28.63	-25.98	-6.79	18.28
8	108	330.00	-153.88	433.10	-22.76	3.38	-4.96	17.63
8	111	0.0	-9628.97	1299.83	-249.31	1703.27	409.17	6.23
8	111	47.14	-9628.97	1299.83	-249.31	1100.61	321.36	-11.05
8	111	94.29	-9481.65	1299.83	-161.90	488.27	233.56	-8.72
8	111	141.43	-9334.33	1299.83	-155.82	-124.46	145.75	-8.94
8	111	188.57	-9187.01	1299.83	-151.31	-737.32	57.95	-8.73
8	111	235.71	-9039.69	1299.83	-49.69	-1350.73	-29.86	1.61
8	111	282.86	-3117.65	116.62	-30.10	-26.19	-5.90	18.64
8	111	330.00	-152.92	447.41	-23.37	3.34	-4.77	17.51
8	112	0.0	-9628.97	1299.83	-249.31	1703.27	409.17	6.23
8	112	47.14	-9628.97	1299.83	-249.31	1100.61	321.36	-11.05
8	112	94.29	-9481.65	1299.83	-161.90	488.27	233.56	-8.72
8	112	141.43	-9334.33	1299.83	-155.82	-124.46	145.75	-8.94
8	112	188.57	-9187.01	1299.83	-151.31	-737.32	57.95	-8.73
8	112	235.71	-9039.69	1299.83	-49.69	-1350.73	-29.86	1.61
8	112	282.86	-3117.65	116.62	-30.10	-26.19	-5.90	18.64
8	112	330.00	-152.92	447.41	-23.37	3.34	-4.77	17.51
8	114	0.0	-9616.82	1271.61	-250.29	1667.98	410.34	6.37
8	114	47.14	-9616.82	1271.61	-250.29	1078.40	322.06	-10.85
8	114	94.29	-9469.50	1271.61	-162.75	479.36	233.78	-8.56
8	114	141.43	-9322.17	1271.61	-156.66	-120.07	145.51	-8.77
8	114	188.57	-9174.85	1271.61	-152.10	-719.62	57.23	-8.56
8	114	235.71	-9027.53	1271.61	-49.52	-1319.71	-31.05	1.59
8	114	282.86	-3113.86	111.89	-29.28	-25.65	-6.09	18.36
8	114	330.00	-153.04	432.10	-22.82	3.30	-4.76	17.42
8	116	0.0	-9616.82	1271.61	-250.29	1667.98	410.34	6.37
8	116	47.14	-9616.82	1271.61	-250.29	1078.40	322.06	-10.85
8	116	94.29	-9469.50	1271.61	-162.75	479.36	233.78	-8.56
8	116	141.43	-9322.17	1271.61	-156.66	-120.07	145.51	-8.77
8	116	188.57	-9174.85	1271.61	-152.10	-719.62	57.23	-8.56
8	116	235.71	-9027.53	1271.61	-49.52	-1319.71	-31.05	1.59
8	116	282.86	-3113.86	111.89	-29.28	-25.65	-6.09	18.36
8	116	330.00	-153.04	432.10	-22.82	3.30	-4.76	17.42

M_S	**N memb.**	**V memb.**	**V orto**	**M memb.**	**M orto**	**T**
	-1.701e+04	-2086.26	-561.96	-2745.81	-221.42	-23.84
	793.41	5780.08	85.86	3279.55	681.97	59.42

Macro	Tipo	Angolo 1-Z (gradi)
10	**Setto**	**0.0**

Viale Duca Alessandro n. 11 – 43123 Parma
Cell. 335 1403156 – E mail ing.concari@gmail.com
Sito web: studioaire.it – P.IVA 02561480340

M_S	Cmb	Z	N memb.	V memb.	V orto	M memb.	M orto	T
		cm	daN	daN	daN	daN m	daN m	daN m
10	1	235.71	194.81	9520.94	-66.10	4159.32	11.70	-145.21
10	1	282.86	-314.46	1.372e+04	-66.10	2753.30	3.67	-140.80
10	1	330.00	-563.03	8901.54	-112.77	-3.74	-16.17	-103.80
10	5	235.71	198.65	1.148e+04	-67.86	4866.31	7.93	-205.72
10	5	282.86	-253.11	1.687e+04	-67.86	3243.40	-1.56	-192.77
10	5	330.00	-549.68	1.095e+04	-110.26	-2.38	-16.90	-139.00
10	6	235.71	266.98	1.302e+04	-77.05	5658.74	14.75	-186.23
10	6	282.86	-124.69	1.876e+04	-77.05	3727.22	6.15	-178.29
10	6	330.00	-547.70	1.221e+04	-136.41	-5.03	-18.85	-129.28
10	8	235.71	266.98	1.302e+04	-77.05	5658.74	14.75	-186.23
10	8	282.86	-124.69	1.876e+04	-77.05	3727.22	6.15	-178.29
10	8	330.00	-547.70	1.221e+04	-136.41	-5.03	-18.85	-129.28
10	34	235.71	163.73	1.796e+04	-105.95	6442.69	115.03	-314.39
10	34	282.86	-195.96	2.138e+04	-105.95	5196.55	98.31	-327.61
10	34	330.00	-388.24	1.630e+04	-421.24	993.68	29.51	-305.84
10	45	235.71	-597.77	-1691.16	-95.40	930.72	78.60	7.27
10	45	282.86	-794.44	2364.38	-95.40	-1198.49	70.28	-17.27
10	45	330.00	-1148.78	-683.61	-334.41	-1597.67	-5.41	-8.46
10	46	235.71	1012.32	2.519e+04	-75.58	9270.49	31.53	-260.40
10	46	282.86	652.62	2.861e+04	-75.58	8024.34	24.08	-260.53
10	46	330.00	191.61	2.185e+04	-150.95	1868.10	-1.90	-235.09
10	48	235.71	1187.18	2.228e+04	-45.74	8590.41	-32.32	-151.06
10	48	282.86	833.69	2.582e+04	-45.74	7326.15	-32.80	-141.62
10	48	330.00	287.48	1.909e+04	51.23	1580.61	-27.82	-113.41
10	66	235.71	176.95	1.246e+04	-78.11	4862.65	57.78	-195.06
10	66	282.86	-182.75	1.588e+04	-78.11	3616.50	47.22	-200.52
10	66	330.00	-412.72	1.138e+04	-241.87	434.61	5.47	-176.47
10	77	235.71	-256.83	2001.42	-59.92	1460.29	32.41	-79.26
10	77	282.86	-616.52	5418.54	-59.92	214.15	24.44	-82.17
10	77	330.00	-748.45	2505.32	-167.31	-702.53	-7.13	-57.21
10	78	235.71	551.10	1.565e+04	-64.57	6109.79	20.98	-171.32
10	78	282.86	191.40	1.907e+04	-64.57	4863.64	14.50	-170.97
10	78	330.00	-157.26	1.383e+04	-122.79	820.24	-8.35	-145.26
10	80	235.71	629.42	1.429e+04	-51.57	5783.92	-7.14	-123.35
10	80	282.86	269.72	1.771e+04	-51.57	4537.78	-10.57	-119.00
10	80	330.00	-115.65	1.253e+04	-34.08	693.95	-19.83	-92.10
10	89	235.71	149.85	7323.80	-50.84	3199.48	9.00	-111.70
10	89	282.86	-241.89	1.056e+04	-50.84	2117.93	2.82	-108.31
10	89	330.00	-433.10	6847.34	-86.75	-2.87	-12.44	-79.85
10	93	235.71	152.41	8629.10	-52.02	3670.80	6.49	-152.04
10	93	282.86	-200.99	1.265e+04	-52.02	2444.66	-0.66	-142.95
10	93	330.00	-424.20	8216.25	-85.07	-1.97	-12.92	-103.32
10	94	235.71	197.97	9659.19	-58.15	4199.09	11.03	-139.05
10	94	282.86	-115.38	1.391e+04	-58.15	2767.20	4.47	-133.30
10	94	330.00	-422.88	9053.26	-102.51	-3.74	-14.23	-96.83
10	96	235.71	197.97	9659.19	-58.15	4199.09	11.03	-139.05
10	96	282.86	-115.38	1.391e+04	-58.15	2767.20	4.47	-133.30
10	96	330.00	-422.88	9053.27	-102.51	-3.74	-14.23	-96.83
10	101	235.71	149.85	7323.80	-50.84	3199.48	9.00	-111.70
10	101	282.86	-241.89	1.056e+04	-50.84	2117.93	2.82	-108.31
10	101	330.00	-433.10	6847.34	-86.75	-2.87	-12.44	-79.85
10	105	235.71	150.37	7584.86	-51.08	3293.74	8.50	-119.77
10	105	282.86	-233.71	1.098e+04	-51.08	2183.27	2.13	-115.24
10	105	330.00	-431.32	7121.12	-86.41	-2.69	-12.53	-84.54
10	108	235.71	186.81	8408.94	-55.98	3716.37	12.13	-109.37
10	108	282.86	-165.22	1.198e+04	-55.98	2441.31	6.24	-107.51
10	108	330.00	-430.27	7790.73	-100.36	-4.11	-13.58	-79.35
10	111	235.71	190.85	8250.89	-56.36	3674.94	13.09	-100.01
10	111	282.86	-164.84	1.169e+04	-56.36	2408.22	7.45	-99.62
10	111	330.00	-431.92	7600.65	-102.44	-4.47	-13.61	-74.01
10	113	235.71	149.85	7323.80	-50.84	3199.48	9.00	-111.70
10	113	282.86	-241.89	1.056e+04	-50.84	2117.93	2.82	-108.31
10	113	330.00	-433.10	6847.34	-86.75	-2.87	-12.44	-79.85
10	114	235.71	186.29	8147.88	-55.74	3622.11	12.63	-101.31
10	114	282.86	-173.40	1.156e+04	-55.74	2375.96	6.93	-100.58
10	114	330.00	-432.05	7516.95	-100.70	-4.29	-13.48	-74.66
10	116	235.71	186.29	8147.88	-55.74	3622.11	12.63	-101.31
10	116	282.86	-173.40	1.156e+04	-55.74	2375.96	6.93	-100.58
10	116	330.00	-432.05	7516.95	-100.70	-4.29	-13.48	-74.66

M_S	N memb.	V memb.	V orto	M memb.	M orto	T
	-1148.78	-1691.16	-421.24	-1597.67	-32.80	-327.61
	1187.18	2.861e+04	51.23	9270.49	115.03	7.27

Macro	Tipo	Angolo 1-Z (gradi)
9	**Setto**	**0.0**

M_S	Cmb	Z	N memb.	V memb.	V orto	M memb.	M orto	T
		cm	daN	daN	daN	daN m	daN m	daN m
9	6	0.0	-9713.97	8831.61	-1169.04	7609.69	835.68	421.52
9	6	47.14	-7425.40	1.063e+04	-1169.04	4201.03	303.94	394.59
9	6	94.29	-3011.81	1.048e+04	-298.44	1251.42	119.03	116.08
9	6	141.43	1940.61	9527.18	25.30	-1137.44	95.93	2.09
9	6	188.57	6404.18	8483.40	21.45	-3293.40	90.21	-100.83
9	6	235.71	9196.58	7858.87	23.60	-5880.90	90.94	-241.18
9	6	282.86	2430.38	-3569.63	-105.47	-1990.70	38.00	-245.30
9	6	330.00	-702.75	-2061.90	-116.66	-172.11	11.26	-201.86
9	8	0.0	-9713.97	8831.61	-1169.04	7609.69	835.68	421.52

Viale Duca Alessandro n. 11 – 43123 Parma
Cell. 335 1403156 – E mail ing.concari@gmail.com
Sito web: studioaire.it – P.IVA 02561480340

9	8	47.14	-7425.40	1.063e+04	-1169.04	4201.03	303.94	394.59
9	8	94.29	-3011.81	1.048e+04	-298.44	1251.42	119.03	116.08
9	8	141.43	1940.61	9527.18	25.30	-1137.44	95.93	2.09
9	8	188.57	6404.18	8483.40	21.45	-3293.40	90.21	-100.83
9	8	235.71	9196.58	7858.87	23.60	-5880.90	90.94	-241.18
9	8	282.86	2430.38	-3569.63	-105.47	-1990.70	38.00	-245.30
9	8	330.00	-702.75	-2061.90	-116.66	-172.11	11.26	-201.86
9	34	0.0	-1.157e+04	1.104e+04	-568.71	7053.78	453.55	413.41
9	34	47.14	-1.013e+04	1.219e+04	-568.71	4823.86	166.46	381.54
9	34	94.29	-5675.22	1.234e+04	-196.21	1719.96	120.11	203.92
9	34	141.43	419.96	1.164e+04	9.55	-697.64	86.80	100.74
9	34	188.57	7115.64	1.092e+04	58.31	-3094.82	79.66	-1.80
9	34	235.71	1.028e+04	1.057e+04	179.19	-5644.90	121.18	-232.13
9	34	282.86	3396.53	-3235.11	-43.62	-2382.94	68.79	-319.13
9	34	330.00	94.61	-2770.06	-49.49	-428.75	26.26	-312.22
9	42	0.0	-8857.72	1.482e+04	-1188.13	7829.91	675.22	391.63
9	42	47.14	-7416.10	1.597e+04	-1188.13	5599.98	384.31	329.83
9	42	94.29	-1636.69	1.634e+04	-335.18	1796.13	122.14	91.91
9	42	141.43	6170.32	1.546e+04	-44.54	-1364.48	45.38	3.85
9	42	188.57	1.337e+04	1.459e+04	3.84	-4121.23	16.70	-50.24
9	42	235.71	1.853e+04	1.421e+04	101.23	-8091.41	28.74	-173.19
9	42	282.86	6900.77	-7199.97	-9.11	-3616.83	13.78	-194.03
9	42	330.00	1390.49	-6783.45	-73.33	-745.58	-1.77	-197.59
9	46	0.0	-9020.52	1.520e+04	-1181.68	8030.48	672.96	396.65
9	46	47.14	-7578.90	1.634e+04	-1181.68	5800.55	382.05	333.37
9	46	94.29	-1782.96	1.676e+04	-338.42	1854.70	124.17	95.32
9	46	141.43	6286.50	1.588e+04	-47.22	-1394.42	46.03	5.24
9	46	188.57	1.409e+04	1.502e+04	3.45	-4316.17	17.12	-51.86
9	46	235.71	1.838e+04	1.463e+04	109.47	-8111.40	31.52	-177.37
9	46	282.86	6875.30	-7472.45	-2.84	-3659.53	15.98	-205.50
9	46	330.00	1381.98	-7105.91	-70.44	-758.30	-0.65	-209.68
9	53	0.0	-6885.06	2594.09	383.19	4522.45	70.42	239.75
9	53	47.14	-4501.45	4242.83	383.19	1005.29	-78.50	475.56
9	53	94.29	-2102.11	3216.25	355.11	-562.99	134.91	339.37
9	53	141.43	-1010.03	1906.95	296.45	-1533.45	237.78	146.13
9	53	188.57	-22.90	362.16	96.06	-2486.45	258.33	-113.23
9	53	235.71	77.69	-937.25	-3.48	-2998.31	216.15	-406.52
9	53	282.86	-1459.53	-1483.97	-378.25	-207.41	93.14	-392.30
9	53	330.00	-1778.93	1514.07	-380.77	514.30	-16.68	-345.81
9	66	0.0	-8375.09	8069.70	-589.92	5784.66	459.20	329.64
9	66	47.14	-6933.47	9218.26	-589.92	3554.74	173.68	326.37
9	66	94.29	-3395.63	9150.08	-148.74	1120.00	103.94	148.54
9	66	141.43	1031.36	8409.23	29.56	-789.68	86.24	51.14
9	66	188.57	5520.27	7637.50	31.16	-2587.85	79.62	-44.74
9	66	235.71	7812.73	7198.11	78.75	-4582.06	91.59	-207.40
9	66	282.86	2369.46	-2939.13	-82.96	-1747.18	44.16	-243.03
9	66	330.00	-177.68	-2102.15	-89.75	-226.02	9.80	-226.38
9	74	0.0	-7208.85	9745.44	-866.31	6130.11	557.91	320.46
9	74	47.14	-5767.23	1.089e+04	-866.31	3900.18	270.71	303.64
9	74	94.29	-1636.03	1.093e+04	-211.35	1157.40	104.91	98.98
9	74	141.43	3562.53	1.010e+04	5.47	-1082.61	67.83	8.35
9	74	188.57	8269.15	9264.22	7.19	-3036.08	51.71	-66.03
9	74	235.71	1.144e+04	8808.81	44.59	-5661.43	50.83	-181.24
9	74	282.86	3909.38	-4687.28	-67.45	-2292.03	19.96	-187.86
9	74	330.00	390.83	-3873.53	-100.27	-366.21	-2.50	-175.77
9	78	0.0	-7278.92	9910.48	-863.36	6218.36	556.90	322.66
9	78	47.14	-5837.30	1.106e+04	-863.36	3988.43	269.70	305.19
9	78	94.29	-1700.27	1.111e+04	-212.74	1183.01	105.79	100.48
9	78	141.43	3613.23	1.029e+04	4.30	-1095.77	68.12	8.96
9	78	188.57	8590.47	9453.27	7.01	-3122.66	51.90	-66.75
9	78	235.71	1.137e+04	8991.60	48.19	-5670.05	52.04	-183.07
9	78	282.86	3897.98	-4806.76	-64.74	-2310.64	20.92	-192.85
9	78	330.00	387.07	-4014.65	-99.01	-371.74	-2.01	-181.02
9	94	0.0	-7220.13	6559.81	-868.88	5661.49	622.89	315.42
9	94	47.14	-5529.27	7900.01	-868.88	3124.30	227.31	296.42
9	94	94.29	-2252.62	7774.65	-220.35	929.70	90.06	87.55
9	94	141.43	1419.56	7051.07	18.99	-843.77	72.86	1.23
9	94	188.57	4725.07	6264.44	14.47	-2439.81	68.13	-76.65
9	94	235.71	6790.63	5795.71	15.66	-4352.22	67.97	-182.00
9	94	282.86	1788.26	-2663.29	-81.22	-1472.62	27.86	-184.73
9	94	330.00	-524.84	-1540.01	-88.12	-124.76	7.73	-152.54
9	96	0.0	-7220.13	6559.81	-868.88	5661.49	622.89	315.42
9	96	47.14	-5529.27	7900.01	-868.88	3124.30	227.31	296.42
9	96	94.29	-2252.62	7774.65	-220.35	929.70	90.06	87.55
9	96	141.43	1419.56	7051.07	18.99	-843.77	72.86	1.23
9	96	188.57	4725.07	6264.44	14.47	-2439.81	68.13	-76.65
9	96	235.71	6790.63	5795.71	15.66	-4352.22	67.97	-182.00
9	96	282.86	1788.26	-2663.29	-81.22	-1472.62	27.86	-184.73
9	96	330.00	-524.84	-1540.01	-88.12	-124.76	7.73	-152.54
9	108	0.0	-6120.43	5863.23	-669.51	4941.92	498.97	273.82
9	108	47.14	-4639.11	7045.46	-669.51	2662.76	191.24	283.78
9	108	94.29	-1734.93	6834.08	-137.97	707.62	90.40	99.53
9	108	141.43	1472.73	6078.71	38.19	-846.83	81.82	8.98
9	108	188.57	4306.86	5278.55	10.48	-2217.51	75.81	-77.69
9	108	235.71	6013.40	4782.99	3.25	-3840.57	67.32	-184.87
9	108	282.86	1597.70	-2665.59	-105.25	-1283.61	25.08	-181.84
9	108	330.00	-415.12	-1551.61	-112.37	-77.54	-0.69	-155.90
9	111	0.0	-5898.38	5818.80	-609.32	4831.90	462.94	264.50
9	111	47.14	-4431.38	6979.00	-609.32	2571.43	181.64	286.70
9	111	94.29	-1559.49	6736.88	-108.76	639.39	92.52	107.79
9	111	141.43	1594.50	5953.32	48.41	-888.90	87.51	13.34
9	111	188.57	4359.35	5125.23	11.13	-2228.01	81.28	-79.40
9	111	235.71	5993.54	4601.08	0.28	-3807.77	69.58	-190.88
9	111	282.86	1608.07	-2774.11	-117.14	-1265.39	25.46	-185.56
9	111	330.00	-380.71	-1617.31	-126.60	-63.86	-3.69	-161.14
9	114	0.0	-5863.13	5732.32	-616.22	4785.32	466.30	263.78
9	114	47.14	-4421.51	6880.88	-616.22	2555.39	182.03	282.65
9	114	94.29	-1590.17	6644.92	-114.50	647.87	91.16	104.28

Viale Duca Alessandro n. 11 – 43123 Parma
Cell. 335 1403156 – E mail ing.concari@gmail.com
Sito web: studioaire.it – P.IVA 02561480340

9	114	141.43	1522.18	5874.85	44.79	-861.36	85.21	11.72
9	114	188.57	4254.66	5063.13	10.03	-2183.96	78.91	-78.43
9	114	235.71	5877.24	4553.57	0.19	-3744.36	67.97	-187.35
9	114	282.86	1569.40	-2702.15	-113.22	-1246.04	24.74	-182.60
9	114	330.00	-385.36	-1575.45	-121.16	-65.11	-3.09	-158.21
9	116	0.0	-5863.13	5732.32	-616.22	4785.32	466.30	263.78
9	116	47.14	-4421.51	6880.88	-616.22	2555.39	182.03	282.65
9	116	94.29	-1590.17	6644.92	-114.50	647.87	91.16	104.28
9	116	141.43	1522.18	5874.85	44.79	-861.36	85.21	11.72
9	116	188.57	4254.66	5063.13	10.03	-2183.96	78.91	-78.43
9	116	235.71	5877.24	4553.57	0.19	-3744.36	67.97	-187.35
9	116	282.86	1569.40	-2702.15	-113.22	-1246.04	24.74	-182.60
9	116	330.00	-385.36	-1575.45	-121.16	-65.11	-3.09	-158.21
M_S			**N memb.**	**V memb.**	**V orto**	**M memb.**	**M orto**	**T**
			-1.157e+04	-7472.45	-1188.13	-8111.40	-78.50	-406.52
			1.853e+04	1.676e+04	383.19	8030.48	835.68	475.56

Macro	Tipo	Angolo 1-X (gradi)
1	**Guscio**	**0.0**

M_G	Cmb	Nodo	N max	N min	N 1	N 2	N 1-2	M max	M min	M 1	M 2	M 1-2
			daN/ m	daN/ m	daN/ m	daN/ m	daN/ m	daN	daN	daN	daN	daN
1	6	17	1040.36	-1633.77	924.81	-1518.22	543.73	871.37	-1027.33	-7.58	-148.39	946.74
1	6	25	1474.05	-1876.46	1473.00	-1875.40	-59.34	723.20	-1788.03	-222.67	-842.16	1216.81
1	6	33	1805.58	-2194.69	1794.59	-2183.70	-209.36	552.02	-2293.96	-338.76	-1403.18	1319.71
1	6	41	1931.62	-2408.54	1925.77	-2402.69	-159.24	348.75	-2626.40	-421.41	-1856.24	1303.15
1	6	49	1980.15	-2539.14	1979.75	-2538.74	-42.26	126.28	-2822.28	-488.18	-2207.81	1197.59
1	6	57	2014.86	-2622.16	2013.12	-2620.42	89.75	-98.26	-2913.15	-541.31	-2470.09	1025.11
1	6	65	2056.12	-2680.04	2046.09	-2670.01	217.72	-306.66	-2933.69	-581.18	-2659.17	803.62
1	6	73	2106.42	-2724.94	2083.08	-2701.60	335.01	-479.42	-2919.81	-608.93	-2790.30	547.05
1	6	81	2162.24	-2763.12	2122.73	-2723.61	439.35	-595.19	-2905.96	-626.10	-2875.05	265.48
1	6	89	2217.55	-2797.78	2161.05	-2741.28	529.29	-633.56	-2920.77	-634.08	-2920.26	-34.18
1	6	97	2262.01	-2830.22	2189.83	-2758.04	601.95	-582.11	-2979.24	-633.44	-2927.91	-346.99
1	6	105	2275.50	-2859.67	2191.63	-2775.79	650.89	-440.91	-3077.20	-623.09	-2895.03	-668.63
1	6	113	2219.17	-2881.35	2131.69	-2793.86	662.25	-217.18	-3192.77	-597.56	-2812.39	-993.56
1	6	121	2021.53	-2882.14	1945.16	-2805.76	607.20	87.03	-3284.60	-539.63	-2657.94	-1311.55
1	6	129	1563.78	-2833.39	1522.01	-2791.62	426.54	488.56	-3265.60	-404.06	-2372.98	-1598.21
1	6	137	706.99	-2688.31	706.97	-2688.29	8.27	1031.19	-2923.20	-96.97	-1795.04	-1785.62
1	6	145	-491.79	-2434.53	-846.96	-2079.37	-750.90	1729.47	-1737.28	511.27	-519.08	-1655.05
1	6	165	1121.84	-1118.60	344.54	-341.30	1066.44	610.77	-1244.84	-277.88	-356.19	-926.98
1	6	173	682.88	-516.26	374.12	-207.50	524.33	609.72	-1342.38	-166.48	-566.18	-955.37
1	6	181	-428.84	-623.00	-609.72	-442.12	49.02	480.37	-1498.94	-110.87	-907.70	-905.92
1	6	189	-547.25	-1657.36	-1559.81	-644.80	-314.28	308.82	-1661.64	-109.87	-1242.95	-806.05
1	6	197	-566.81	-2497.93	-2286.72	-778.02	-602.72	142.99	-1806.93	-134.56	-1529.38	-681.30
1	6	205	-545.81	-3097.14	-2782.41	-860.55	-839.01	3.31	-1926.36	-165.97	-1757.08	-545.90
1	6	213	-495.57	-3487.82	-3072.26	-911.13	-1034.78	-103.72	-2018.90	-194.53	-1928.09	-407.02
1	6	221	-421.20	-3701.62	-3181.00	-941.82	-1198.67	-177.55	-2085.87	-215.83	-2047.59	-267.53
1	6	229	-319.40	-3768.47	-3128.56	-959.32	-1340.75	-219.45	-2128.91	-228.01	-2120.34	-127.62
1	6	237	-178.98	-3725.01	-2936.70	-967.29	-1474.43	-230.18	-2149.67	-230.28	-2149.57	14.09
1	6	245	13.94	-3623.04	-2640.73	-968.37	-1614.84	-208.53	-2149.97	-221.75	-2136.75	159.64
1	6	253	261.16	-3528.75	-2301.49	-966.09	-1773.43	-150.34	-2131.95	-200.47	-2081.81	311.18
1	6	261	526.76	-3509.79	-2015.25	-967.79	-1949.14	-47.65	-2097.73	-161.98	-1983.40	470.45
1	6	269	711.58	-3622.94	-1921.75	-989.61	-2116.56	112.10	-2047.87	-97.21	-1838.57	638.97
1	6	277	646.33	-3921.38	-2210.25	-1064.80	-2210.88	345.60	-1977.60	8.49	-1640.49	818.25
1	6	285	122.79	-4505.54	-3129.39	-1253.35	-2115.53	658.96	-1869.80	159.16	-1370.00	1007.02
1	6	293	-969.18	-5926.27	-5307.52	-1587.93	-1638.39	966.19	-1676.19	258.96	-968.96	1169.87
1	6	307	-784.48	-2736.72	-883.66	-2637.54	428.70	945.16	-1473.77	-625.18	96.57	-

Viale Duca Alessandro n. 11 – 43123 Parma
Cell. 335 1403156 – E mail ing.concari@gmail.com
Sito web: studioaire.it – P.IVA 02561480340

1154.37												
1	6	315	-2071.06	-3876.60	-2116.24	-3831.43	281.99	463.18	-2374.51	-1879.54	-31.79	-
1076.84												
1	6	323	-2600.02	-4957.24	-2624.75	-4932.52	240.14	44.16	-2845.20	-2576.34	-224.70	-
839.37												
1	6	331	-2815.05	-5697.45	-2852.56	-5659.94	326.67	-257.59	-3008.48	-2924.48	-341.59	-
473.29												
1	6	339	-2869.14	-6101.15	-2935.43	-6034.87	458.09	-391.55	-3028.21	-3027.09	-392.67	-
54.46												
1	6	347	-2824.65	-6170.88	-2927.70	-6067.83	578.10	-349.82	-2987.38	-2938.78	-398.42	
354.72												
1	6	355	-2708.90	-5887.41	-2843.21	-5753.11	639.41	-175.10	-2885.27	-2687.44	-372.93	
704.99												
1	6	363	-2523.30	-5218.13	-2662.14	-5079.29	595.71	64.13	-2678.11	-2288.36	-325.62	
957.54												
1	6	371	-2240.19	-4144.14	-2330.60	-4053.73	404.92	308.02	-2322.63	-1753.64	-260.97	
1083.08												
1	6	379	-1766.16	-2763.07	-1770.21	-2759.02	63.41	525.27	-1785.99	-1095.14	-165.58	
1058.05												
1	6	387	-842.53	-1558.14	-935.83	-1464.83	-240.97	726.61	-1000.68	-299.85	25.78	
848.16												
1	6	395	255.45	-2354.00	-1920.21	-178.34	-971.48	930.54	-2280.74	-625.05	-725.16	
1604.86												
1	6	403	-569.34	-4415.62	-579.45	-4405.51	-196.93	628.40	-2945.69	-1815.83	-501.46	
1661.82												
1	6	407	2046.30	428.01	2036.45	437.86	-125.90	469.99	-148.26	351.45	-29.73	
243.38												
1	6	408	3242.12	283.17	3224.66	300.63	-226.62	402.75	-336.83	76.67	-10.75	
367.19												
1	6	409	3412.62	266.25	3397.06	281.80	-220.68	404.58	-434.97	-29.31	-1.08	
419.54												
1	6	410	3367.16	255.15	3353.07	269.24	-208.94	390.25	-470.79	-90.16	9.63	
427.62												
1	6	411	41.72	-5216.41	-49.59	-5125.10	-686.85	3245.71	-675.74	-258.26	2828.24	
1209.47												
1	6	415	3299.38	249.02	3286.08	262.32	-201.00	349.70	-469.46	-138.65	18.88	
401.94												
1	6	416	3257.98	245.80	3245.16	258.62	-196.07	287.59	-440.41	-178.63	25.80	
349.35												
1	6	417	3250.59	243.84	3238.16	256.26	-192.90	211.73	-390.56	-209.47	30.64	
276.19												
1	6	418	3272.86	242.36	3260.81	254.41	-190.71	131.32	-328.99	-231.63	33.96	
187.98												
1	6	419	-190.56	-5866.01	-267.04	-5789.53	-654.38	3714.70	-360.67	-89.14	3443.17	
1016.30												
1	6	423	3317.20	241.16	3305.52	252.83	-189.11	62.05	-272.40	-246.66	36.31	
89.13												
1	6	424	3373.58	240.41	3362.26	251.73	-188.02	39.05	-257.27	-256.29	38.07	-
17.08												
1	6	425	3426.25	240.55	3415.17	251.62	-187.48	86.64	-308.81	-261.62	39.46	-
128.18												
1	6	426	3447.12	242.26	3436.09	253.29	-187.67	174.72	-396.06	-262.03	40.69	-
241.95												
1	6	427	59.48	-6970.91	1.92	-6913.35	-633.53	2950.61	-640.84	-491.01	2800.78	
718.10												
1	6	435	-406.95	-7192.77	-539.62	-7060.09	-939.53	-1189.94	-2812.54	-2811.66	-1190.82	-
37.89												
1	6	443	-961.95	-6058.16	-966.12	-6053.98	-145.86	738.84	-1340.61	-1265.72	663.95	-
387.46												
1	6	447	3386.15	246.52	3374.76	257.91	-188.76	279.86	-489.42	-251.74	42.19	-
355.45												
1	6	448	3157.76	254.19	3145.16	266.80	-190.88	396.89	-562.38	-210.32	44.83	-
462.36												
1	6	449	2620.56	262.65	2604.25	278.97	-195.46	532.69	-563.94	-80.46	49.20	-
544.47												
1	6	450	1542.09	250.63	1507.36	285.35	-208.91	721.26	-400.00	272.14	49.12	-
549.43												
1	6	451	-217.01	-7661.08	-226.67	-7651.42	-268.06	1502.73	-878.34	-346.83	971.23	-
991.49												
1	6	455	370.00	-509.89	-465.46	325.57	-192.66	1223.45	-129.17	1117.97	-23.69	-
362.69												
1	6	456	-281.45	-1330.04	-1243.24	-368.25	-288.93	1289.57	-401.13	1210.36	-321.92	-
357.29												
1	6	457	1018.54	-431.09	-377.14	964.58	274.42	144.63	5.53	32.20	117.96	-
54.76												
1	6	458	868.82	-359.09	-3.73	513.46	-556.84	26.17	-7.57	9.55	9.06	
16.87												
1	6	459	616.85	-8736.05	615.84	-8735.03	-97.42	1053.61	-1656.27	-521.25	-81.41	-
1336.97												
1	6	467	735.64	-1.139e+04	732.97	-1.139e+04	-179.91	-1160.22	-5153.11	-2420.06	-3893.27	-
1855.59												
1	6	475	-897.77	-2174.49	-1221.47	-1850.79	555.42	917.66	-2812.83	-348.35	-1546.82	-
1766.37												
1	6	476	-1222.80	-3360.15	-3349.24	-1233.70	152.30	2180.16	-2377.15	-485.94	288.95	-
2245.47												
1	6	477	-2267.69	-4861.19	-4797.84	-2331.04	400.35	1647.40	-2249.01	-1109.06	507.45	-
1772.63												
1	6	478	-3166.68	-5882.86	-5759.01	-3290.53	566.62	1081.94	-2235.83	-1650.06	496.17	-
1265.04												
1	6	479	-3782.36	-6478.83	-6228.30	-4032.89	782.82	617.65	-2211.70	-2032.71	438.66	-
688.76												
1	6	480	-4045.56	-6831.85	-6380.31	-4497.10	1026.76	369.82	-2243.69	-2239.74	365.87	-
101.52												
1	6	481	-4003.83	-6975.58	-6305.68	-4673.72	1241.77	357.89	-2356.15	-2278.66	280.40	
452.00												
1	6	482	-3754.76	-6843.30	-6022.64	-4575.42	1364.24	508.43	-2489.13	-2161.27	180.57	
935.57												
1	6	483	-3389.29	-6335.82	-5488.23	-4236.88	1333.80	725.67	-2560.25	-1899.24	64.67	

Viale Duca Alessandro n. 11 – 43123 Parma
Cell. 335 1403156 – E mail ing.concari@gmail.com
Sito web: studioaire.it – P.IVA 02561480340

1317.23												
1	6	484	-2974.80	-5365.23	-4607.16	-3732.88	1112.41	935.35	-2511.88	-1508.27	-68.25	
1566.03												
1	6	485	-2508.55	-3961.95	-3269.70	-3200.80	725.88	1074.70	-2311.77	-1020.53	-216.55	
1644.82												
1	6	486	-1481.65	-2846.54	-1543.03	-2785.17	282.85	1033.25	-1929.39	-518.46	-377.68	
1479.65												
1	6	487	-97.84	-3039.11	-2816.29	-320.67	778.29	2896.60	-2177.10	52.03	667.47	-
2518.12												
1	6	488	-987.92	-4656.25	-4478.48	-1165.70	787.73	2817.84	-1466.44	75.75	1275.65	-
2056.41												
1	6	489	-1752.92	-5614.27	-5434.85	-1932.34	812.78	2445.03	-941.31	-15.65	1519.37	-
1509.23												
1	6	490	-2372.89	-6124.42	-5931.54	-2565.77	828.49	1924.39	-503.96	-148.18	1568.61	-
858.71												
1	6	491	-2813.38	-6301.96	-6084.43	-3030.90	843.53	1517.24	-291.19	-272.41	1498.46	-
183.35												
1	6	492	-3074.97	-6201.99	-5962.15	-3314.81	832.14	1455.28	-479.07	-362.44	1338.65	
460.44												
1	6	493	-3194.66	-5820.83	-5581.29	-3434.19	756.09	1623.69	-931.63	-408.75	1100.81	
1030.88												
1	6	494	-3231.99	-5118.92	-4914.70	-3436.21	586.20	1794.70	-1420.69	-413.21	787.21	
1491.45												
1	6	495	-3241.59	-4068.99	-3911.11	-3399.47	325.12	1845.63	-1843.01	-388.77	391.40	
1802.59												
1	6	496	-2539.75	-3421.96	-2540.68	-3421.03	28.65	1678.68	-2149.23	-362.53	-108.02	
1909.72												
1	6	497	-834.54	-3598.05	-851.23	-3581.35	-214.17	1158.01	-2302.68	-371.55	-773.13	
1718.66												
1	6	498	-145.28	-2802.08	-2588.70	-358.66	722.07	3112.26	-1803.30	389.54	919.42	-
2443.46												
1	6	499	-525.30	-4306.65	-4077.16	-754.79	902.83	3464.17	-776.04	771.00	1917.14	-
2041.18												
1	6	500	-1059.52	-5187.11	-4987.46	-1259.17	885.57	3396.16	-3.08	971.90	2421.17	-
1537.40												
1	6	501	-1581.80	-5637.75	-5471.26	-1748.28	804.69	3014.97	618.90	1037.03	2596.84	-
909.42												
1	6	502	-2038.07	-5748.02	-5612.65	-2173.45	695.63	2582.52	969.26	1004.58	2547.19	-
236.09												
1	6	503	-2415.70	-5561.24	-5457.95	-2518.98	560.56	2440.83	790.38	904.48	2326.73	
418.69												
1	6	504	-2730.82	-5088.52	-5022.31	-2797.03	389.51	2530.55	185.84	755.37	1961.02	
1005.50												
1	6	505	-3019.68	-4322.59	-4297.20	-3045.08	180.12	2557.36	-536.02	565.24	1456.11	
1481.16												
1	6	506	-3241.79	-3345.86	-3268.78	-3318.86	-45.61	2381.71	-1249.25	333.28	799.19	
1800.47												
1	6	507	-1915.82	-3708.33	-1946.95	-3677.20	-234.17	1911.08	-1906.40	54.11	-49.44	
1908.04												
1	6	508	-362.47	-4192.71	-387.65	-4167.53	-309.55	1067.22	-2513.70	-269.11	-1177.37	
1731.91												
1	6	509	-468.29	-2725.90	-2655.36	-538.83	392.77	3040.01	-1386.29	572.17	1081.55	-
2198.44												
1	6	510	-564.48	-3916.39	-3748.99	-731.88	730.13	3768.93	-165.30	1172.85	2430.79	-
1863.85												
1	6	511	-865.34	-4681.78	-4517.36	-1029.76	774.89	4012.06	727.02	1560.68	3178.40	-
1429.55												
1	6	512	-1254.71	-5075.17	-4945.80	-1384.09	691.04	3848.78	1401.24	1763.55	3486.47	-
869.19												
1	6	513	-1665.96	-5149.65	-5060.84	-1754.77	549.10	3509.48	1768.40	1805.86	3472.02	-
252.62												
1	6	514	-2074.44	-4935.93	-4885.25	-2125.12	377.41	3287.74	1631.00	1712.14	3206.60	
357.54												
1	6	515	-2481.66	-4449.11	-4430.72	-2500.05	189.32	3211.66	1018.86	1502.84	2727.68	
909.42												
1	6	516	-2902.00	-3701.60	-3701.60	-2902.00	0.57	3042.18	196.86	1193.11	2045.94	
1357.25												
1	6	517	-2670.41	-3399.64	-2707.04	-3363.01	-159.28	2635.97	-695.03	794.39	1146.56	
1656.17												
1	6	518	-1453.92	-3937.27	-1478.05	-3913.14	-243.63	1918.72	-1614.85	319.43	-15.56	
1758.83												
1	6	519	-74.20	-4577.23	-82.59	-4568.83	-194.23	879.25	-2613.38	-208.14	-1526.00	
1617.23												
1	6	520	-700.86	-2811.65	-2811.64	-700.87	4.70	2810.39	-962.68	663.04	1184.67	-
1868.42												
1	6	521	516.53	-64.27	499.59	-47.33	-97.72	468.50	-188.67	412.50	-132.68	
183.47												
1	6	522	-775.60	-3583.27	-3522.44	-836.43	408.78	3867.64	361.91	1397.16	2832.39	-
1599.24												
1	6	523	-940.67	-4184.66	-4094.89	-1030.45	532.14	4409.05	1287.45	1902.58	3793.92	-
1241.69												
1	6	524	-1218.11	-4508.85	-4431.16	-1295.80	499.62	4484.91	1938.31	2196.53	4226.69	-
768.70												
1	6	525	-1568.91	-4556.08	-4504.76	-1620.23	388.16	4282.33	2264.54	2293.12	4253.74	-
238.46												
1	6	526	-1969.40	-4338.40	-4313.49	-1994.31	241.64	4004.70	2162.76	2210.67	3956.79	
293.17												
1	6	527	-2413.54	-3867.78	-3862.37	-2418.94	88.52	3726.12	1624.84	1968.73	3382.22	
777.40												
1	6	528	-2896.67	-3168.95	-3161.27	-2904.36	-45.10	3331.73	800.97	1586.63	2546.06	
1170.92												
1	6	529	-2217.67	-3477.53	-2230.79	-3464.41	-127.87	2704.53	-184.08	1084.40	1436.04	
1433.56												
1	6	530	-1106.84	-4113.25	-1111.78	-4108.31	-121.78	1794.70	-1298.04	485.97	10.69	
1528.00												
1	6	531	125.64	-4831.82	125.60	-4831.78	12.96	650.53	-2629.09	-175.85	-1802.71	
1423.83												
1	6	532	-762.66	-3009.34	-2948.04	-823.96	-366.01	2503.36	-547.33	704.68	1251.35	-

Viale Duca Alessandro n. 11 – 43123 Parma
Cell. 335 1403156 – E mail ing.concari@gmail.com
Sito web: studioaire.it – P.IVA 02561480340

1500.66												
1	6	533	-964.96	-3360.03	-3359.29	-965.70	41.98	3853.80	804.15	1518.46	3139.50	-
1291.57												
1	6	534	-1108.93	-3759.42	-3740.21	-1128.13	224.78	4674.30	1700.31	2096.06	4278.55	-
1010.11												
1	6	535	-1326.93	-3995.96	-3970.31	-1352.58	260.39	4977.20	2290.56	2448.22	4819.54	-
631.44												
1	6	536	-1630.54	-4012.34	-3993.22	-1649.66	212.52	4904.65	2564.59	2582.09	4887.15	-
201.60												
1	6	537	-2010.99	-3796.68	-3787.58	-2020.09	127.16	4594.82	2485.00	2511.09	4568.73	
233.14												
1	6	538	-2463.00	-3352.17	-3350.47	-2464.70	38.90	4129.26	2040.88	2253.13	3917.02	
631.03												
1	6	539	-2690.14	-2988.12	-2691.80	-2986.46	-22.21	3499.51	1283.49	1829.51	2953.49	
954.91												
1	6	540	-1835.11	-3588.04	-1835.51	-3587.64	-26.56	2657.21	278.85	1265.12	1670.94	
1171.74												
1	6	541	-822.92	-4265.53	-823.80	-4264.65	55.03	1596.51	-971.18	589.76	35.57	
1253.59												
1	6	542	290.63	-5014.05	279.11	-5002.54	246.90	415.32	-2585.74	-160.28	-2010.14	
1181.57												
1	6	543	-703.58	-3230.06	-3019.93	-913.72	-697.67	2164.86	-146.46	722.60	1295.80	-
1119.56												
1	6	544	-1038.56	-3268.24	-3222.08	-1084.72	-317.46	3789.81	1161.18	1583.69	3367.30	-
965.45												
1	6	545	-1250.56	-3451.21	-3446.91	-1254.87	-97.28	4860.23	1989.44	2205.01	4644.67	-
756.55												
1	6	546	-1473.11	-3578.37	-3578.37	-1473.12	3.75	5353.41	2512.60	2593.65	5272.35	-
472.96												
1	6	547	-1761.34	-3550.82	-3550.32	-1761.85	29.99	5382.96	2744.06	2752.49	5374.53	-
148.91												
1	6	548	-2128.92	-3331.47	-3331.10	-2129.29	20.97	5055.32	2677.68	2691.42	5041.58	
180.23												
1	6	549	-2577.64	-2911.72	-2911.40	-2577.97	10.40	4445.83	2311.68	2426.75	4330.76	
482.01												
1	6	550	-2297.28	-3108.76	-2298.21	-3107.82	27.57	3596.16	1652.60	1980.30	3268.45	
727.68												
1	6	551	-1509.25	-3719.84	-1513.62	-3715.46	98.26	2539.54	692.73	1379.22	1853.05	
892.50												
1	6	552	-580.18	-4406.95	-595.75	-4391.38	243.62	1359.64	-644.91	655.93	58.81	
956.77												
1	6	553	441.78	-5158.05	400.91	-5117.18	476.64	198.15	-2508.91	-152.37	-2158.39	
908.86												
1	6	554	-576.46	-3415.09	-3014.51	-977.04	-988.25	1822.05	235.61	731.44	1326.22	-
735.36												
1	6	555	-984.35	-3287.18	-3088.30	-1183.23	-646.85	3718.03	1430.68	1621.51	3527.20	-
632.52												
1	6	556	-1294.63	-3287.75	-3202.04	-1380.34	-404.33	4992.27	2180.54	2269.61	4903.20	-
492.45												
1	6	557	-1577.69	-3290.87	-3254.41	-1614.16	-247.28	5624.44	2650.11	2681.16	5593.39	-
302.33												
1	6	558	-1892.12	-3199.61	-3182.25	-1909.48	-149.68	5723.41	2854.09	2856.63	5720.88	-
85.26												
1	6	559	-2268.11	-2961.33	-2951.61	-2277.83	-81.52	5384.83	2796.62	2803.64	5377.80	
134.67												
1	6	560	-2548.47	-2724.46	-2549.53	-2723.40	-13.62	4677.25	2484.47	2537.05	4624.68	
335.43												
1	6	561	-1974.11	-3250.95	-1979.14	-3245.92	79.97	3649.66	1920.58	2078.36	3491.88	
497.91												
1	6	562	-1239.11	-3859.44	-1257.77	-3840.78	220.34	2379.95	1057.95	1455.38	1982.52	
606.18												
1	6	563	-373.41	-4540.78	-416.53	-4497.67	421.67	1108.59	-329.97	701.49	77.13	
648.00												
1	6	564	582.65	-5281.32	500.58	-5199.25	688.85	20.57	-2425.61	-146.06	-2258.97	
616.32												
1	6	565	-408.05	-3545.47	-2935.15	-1018.38	-1241.91	1506.36	579.68	739.20	1346.84	-
349.83												
1	6	566	-843.59	-3365.87	-2948.89	-1260.58	-936.95	3669.96	1604.88	1648.31	3626.53	-
296.30												
1	6	567	-1233.03	-3256.46	-2994.32	-1495.16	-679.49	5079.93	2295.42	2313.31	5062.04	-
222.49												
1	6	568	-1595.34	-3153.21	-2990.12	-1758.43	-476.94	5794.37	2734.33	2739.36	5789.33	-
124.03												
1	6	569	-1961.74	-2993.57	-2884.05	-2071.26	-317.82	5930.90	2925.87	2925.93	5930.84	-
13.69												
1	6	570	-2338.50	-2752.05	-2645.72	-2444.84	-180.74	5583.38	2875.99	2879.37	5580.00	
95.56												
1	6	571	-2258.35	-2887.21	-2261.11	-2884.45	-41.58	4816.67	2596.38	2613.20	4799.86	
192.47												
1	6	572	-1720.59	-3400.15	-1729.44	-3391.30	121.63	3671.01	2100.86	2148.08	3623.79	
268.17												
1	6	573	-1025.73	-3998.71	-1061.78	-3962.65	325.41	2202.49	1367.05	1511.56	2057.98	
315.98												
1	6	574	-204.55	-4667.11	-280.76	-4590.91	578.15	875.85	-52.35	737.18	86.32	
330.89												
1	6	575	709.10	-5391.77	579.94	-5262.62	878.24	-94.76	-2364.53	-137.70	-2321.59	
309.22												
1	6	576	-213.32	-3624.50	-2796.29	-1041.54	-1462.62	1361.70	747.15	749.75	1359.10	
39.89												
1	6	577	-668.50	-3458.37	-2804.54	-1322.33	-1181.78	3669.68	1670.91	1671.88	3668.72	
43.94												
1	6	578	-1115.03	-3303.90	-2815.41	-1603.52	-911.38	5126.37	2346.05	2347.03	5125.39	
52.27												
1	6	579	-1538.74	-3141.84	-2773.81	-1906.77	-674.19	5865.19	2780.28	2781.45	5864.02	
60.05												
1	6	580	-1936.04	-2953.03	-2644.02	-2245.06	-467.73	6008.32	2973.71	2975.06	6006.97	
64.08												
1	6	581	-2217.15	-2812.81	-2402.87	-2627.10	-275.92	5650.41	2932.26	2933.67	5649.01	

Viale Duca Alessandro n. 11 – 43123 Parma
Cell. 335 1403156 – E mail ing.concari@gmail.com
Sito web: studioaire.it – P.IVA 02561480340

61.76												
1	6	582	-2031.00	-3064.90	-2036.95	-3058.96	-78.17	4856.81	2668.24	2669.50	4855.55	
52.47												
1	6	583	-1531.20	-3554.79	-1541.57	-3544.42	144.45	3663.21	2200.83	2201.81	3662.23	
37.91												
1	6	584	-869.64	-4135.65	-920.62	-4084.68	404.84	2077.40	1556.29	1557.15	2076.53	
21.19												
1	6	585	-78.50	-4785.95	-187.09	-4677.36	706.67	768.82	82.18	768.78	82.22	5.05
1	6	586	813.35	-5492.44	636.04	-5315.13	1042.43	-125.28	-2352.65	-125.33	-2352.59	-
10.66												
1	6	587	-11.36	-3665.15	-2623.24	-1053.27	-1649.65	1593.58	532.71	764.36	1361.94	
438.28												
1	6	588	-507.20	-3536.60	-2662.23	-1381.58	-1372.70	3727.90	1618.67	1693.44	3653.14	
390.01												
1	6	589	-1003.63	-3375.59	-2658.07	-1721.15	-1089.54	5133.36	2331.42	2371.20	5093.59	
331.45												
1	6	590	-1462.51	-3202.37	-2591.01	-2073.87	-830.61	5838.65	2786.76	2807.17	5818.24	
248.76												
1	6	591	-1849.40	-3039.33	-2445.70	-2443.03	-594.96	5956.53	2996.44	3003.77	5949.20	
147.10												
1	6	592	-2038.26	-3003.93	-2207.49	-2834.70	-367.13	5583.46	2966.46	2966.86	5583.05	
32.65												
1	6	593	-1852.33	-3267.54	-1863.92	-3255.96	-127.51	4791.77	2703.46	2706.95	4788.28	-
85.26												
1	6	594	-1397.46	-3722.48	-1406.11	-3713.83	141.54	3629.73	2214.04	2241.17	3602.60	-
194.07												
1	6	595	-770.79	-4273.82	-829.82	-4214.79	450.90	2169.71	1457.82	1594.20	2033.33	-
280.16												
1	6	596	-2.34	-4898.30	-137.06	-4763.58	800.90	925.41	-66.37	798.16	60.88	-
331.68												
1	6	597	884.18	-5583.85	661.73	-5361.39	1178.70	-56.72	-2405.77	-108.06	-2354.43	-
343.46												
1	6	598	162.06	-3682.47	-2452.93	-1067.48	-1793.11	1962.12	171.77	782.85	1351.05	
848.90												
1	6	599	-408.95	-3584.29	-2531.03	-1462.20	-1495.02	3833.07	1449.83	1708.49	3574.42	
741.30												
1	6	600	-949.86	-3438.19	-2512.47	-1875.58	-1202.72	5100.83	2238.38	2375.83	4963.38	
612.00												
1	6	601	-1411.78	-3297.11	-2423.23	-2285.66	-940.15	5716.98	2736.08	2802.39	5650.67	
439.62												
1	6	602	-1749.52	-3206.81	-2268.54	-2687.79	-697.84	5775.40	2976.74	2996.58	5755.55	
234.83												
1	6	603	-1869.18	-3258.41	-2040.13	-3087.46	-456.37	5377.77	2964.33	2964.36	5377.74	8.84
1	6	604	-1704.32	-3514.53	-1725.59	-3493.26	-195.08	4616.98	2687.51	2712.91	4591.58	-
219.91												
1	6	605	-1307.46	-3919.42	-1311.64	-3915.24	104.45	3575.61	2118.34	2256.65	3437.30	-
427.11												
1	6	606	-728.23	-4422.25	-784.78	-4365.70	453.55	2376.75	1161.64	1617.55	1920.84	-
588.33												
1	6	607	14.40	-5006.67	-134.30	-4857.98	851.17	1212.38	-370.49	824.15	17.73	-
681.02												
1	6	608	904.78	-5664.55	644.69	-5404.46	1281.01	110.47	-2520.95	-84.94	-2325.54	-
689.94												
1	6	609	244.74	-3687.08	-2332.18	-1110.17	-1868.55	2357.70	-236.82	804.67	1316.22	
1271.80												
1	6	610	-428.40	-3589.36	-2415.27	-1602.49	-1527.34	3950.02	1176.84	1706.59	3420.27	
1090.16												
1	6	611	-986.22	-3480.79	-2361.08	-2105.93	-1240.75	5020.07	2047.36	2338.42	4729.01	
883.47												
1	6	612	-1396.88	-3425.81	-2246.59	-2576.10	-1001.00	5502.96	2594.14	2736.05	5361.05	
626.61												
1	6	613	-1644.47	-3452.30	-2088.77	-3008.01	-778.34	5466.21	2878.32	2920.41	5424.12	
327.33												
1	6	614	-1702.84	-3586.90	-1878.37	-3411.37	-547.64	5026.37	2894.80	2894.82	5026.35	-
6.99												
1	6	615	-1564.90	-3832.98	-1602.10	-3795.79	-288.06	4328.92	2586.09	2658.60	4256.42	-
348.00												
1	6	616	-1243.63	-4171.72	-1243.79	-4171.55	21.96	3494.93	1885.98	2224.47	3156.44	-
655.77												
1	6	617	-737.82	-4597.71	-779.38	-4556.15	398.39	2569.70	771.22	1613.21	1727.71	-
897.42												
1	6	618	-39.61	-5116.21	-183.13	-4972.69	841.41	1528.08	-739.64	843.67	-55.23	-
1040.98												
1	6	619	849.51	-5729.76	566.24	-5446.49	1335.45	367.32	-2680.80	-52.57	-2260.91	-
1050.51												
1	6	620	142.69	-3677.47	-2308.99	-1225.80	-1831.69	2744.56	-680.22	829.64	1234.70	
1700.37												
1	6	621	-617.34	-3542.11	-2302.64	-1856.81	-1445.30	4018.11	817.63	1669.26	3166.49	
1414.34												
1	6	622	-1107.25	-3524.88	-2173.25	-2458.88	-1200.35	4860.76	1743.16	2218.53	4385.39	
1120.73												
1	6	623	-1382.44	-3630.62	-2032.22	-2980.84	-1019.12	5198.68	2313.07	2554.05	4957.71	
798.31												
1	6	624	-1512.59	-3801.89	-1882.38	-3432.11	-842.50	5035.62	2641.60	2720.61	4956.60	
427.69												
1	6	625	-1519.11	-4013.72	-1698.69	-3834.15	-644.77	4518.45	2707.86	2707.90	4518.40	-
9.18												
1	6	626	-1407.73	-4255.84	-1468.96	-4194.61	-413.07	3923.21	2343.05	2494.17	3772.10	-
464.70												
1	6	627	-1178.63	-4519.05	-1182.93	-4514.74	-119.81	3352.20	1498.85	2098.58	2752.47	-
867.09												
1	6	628	-786.30	-4831.27	-803.77	-4813.81	265.21	2683.81	307.37	1552.75	1438.43	-
1186.85												
1	6	629	-172.64	-5238.82	-284.95	-5126.51	745.92	1828.63	-1153.02	852.47	-176.87	-
1399.17												
1	6	630	682.02	-5768.25	403.03	-5489.26	1312.14	708.65	-2863.35	-8.38e-02	-2154.63	-
1424.53												
1	6	631	-262.82	-3628.55	-2409.16	-1482.20	-1617.78	3073.35	-1163.86	853.95	1055.54	

Viale Duca Alessandro n. 11 – 43123 Parma
Cell. 335 1403156 – E mail ing.concari@gmail.com
Sito web: studioaire.it – P.IVA 02561480340

2116.20											
1	6	632	-979.18	-3454.37	-2147.25	-2286.31	-1235.64	3934.37	393.57	1561.53	2766.42
1664.75											
1	6	633	-1222.45	-3655.55	-1904.13	-2973.87	-1092.66	4557.82	1326.66	1947.98	3936.49
1273.40											
1	6	634	-1293.21	-3985.31	-1749.76	-3528.76	-1010.27	4808.53	1838.08	2171.50	4475.11
937.68											
1	6	635	-1326.27	-4286.65	-1631.63	-3981.29	-900.41	4501.51	2179.04	2317.28	4363.27
549.50											
1	6	636	-1300.66	-4558.48	-1481.27	-4377.87	-745.51	3830.27	2333.55	2333.65	3830.18
11.76											
1	6	637	-1202.73	-4816.69	-1294.64	-4724.78	-568.96	3388.87	1878.84	2141.72	3125.99
-572.58											
1	6	638	-1069.71	-5020.66	-1098.18	-4992.19	-334.16	3079.16	951.88	1794.38	2236.66
-1040.40											
1	6	639	-839.94	-5185.12	-840.11	-5184.96	26.78	2623.30	-206.93	1378.45	1037.92
-1404.83											
1	6	640	-374.81	-5406.14	-430.20	-5350.76	524.96	2048.21	-1603.06	840.57	-395.42
-1717.86											
1	6	641	361.63	-5756.04	137.38	-5531.80	1149.60	1135.68	-3050.80	95.35	-2010.47
-1809.15											
1	6	642	-1068.45	-3465.18	-2577.85	-1955.78	-1157.30	3233.01	-1724.58	839.92	668.51
2477.31											
1	6	643	-1313.93	-3452.40	-1863.88	-2902.45	-934.67	3515.99	-81.83	1301.46	2132.70
1750.24											
1	6	644	-1163.65	-3998.28	-1511.44	-3650.49	-930.00	4024.89	808.48	1418.35	3415.02
1260.82											
1	6	645	-1056.37	-4556.80	-1364.17	-4249.00	-991.31	4372.06	1117.28	1480.58	4008.76
1024.92											
1	6	646	-1069.44	-4941.24	-1333.18	-4677.50	-975.49	3903.18	1370.70	1602.01	3671.87
729.58											
1	6	647	-1052.43	-5213.57	-1224.58	-5041.41	-828.70	2895.07	1678.55	1682.87	2890.75
72.41											
1	6	648	-922.60	-5519.49	-1043.25	-5398.85	-734.87	2703.88	1073.64	1482.98	2294.54
-706.94											
1	6	649	-852.83	-5762.17	-930.78	-5684.23	-613.67	2613.61	245.46	1170.68	1688.39
-1155.43											
1	6	650	-821.36	-5811.58	-846.76	-5786.18	-355.12	2213.35	-708.52	974.16	530.68
-1444.01											
1	6	651	-580.98	-5705.56	-583.64	-5702.90	116.66	2033.47	-2100.22	762.64	-829.39
-1907.41											
1	6	652	-125.54	-5635.75	-218.40	-5542.89	709.24	1620.33	-3252.23	242.63	-1874.53
-2194.28											
1	6	653	-2054.39	-2961.70	-2384.89	-2631.19	-436.62	2947.56	-2505.34	565.59	-123.37
2704.60											
1	6	654	-1260.96	-3589.10	-1515.09	-3334.98	-725.98	2418.67	-642.13	673.32	1103.22
1515.23											
1	6	655	-864.59	-4653.94	-955.97	-4562.57	-581.28	3345.06	61.17	451.66	2954.57
1062.94											
1	6	656	-607.58	-5337.60	-794.73	-5150.44	-922.07	3999.60	217.82	525.04	3692.38
1033.17											
1	6	657	-674.53	-6065.82	-982.65	-5757.70	-1251.49	3339.96	40.73	365.00	3015.69
982.19											
1	6	658	-900.03	-5804.93	-1001.54	-5703.42	-698.28	1530.92	605.41	676.98	1459.35
247.22											
1	6	659	-502.43	-6210.04	-697.56	-6014.91	-1037.14	1869.49	-400.38	223.99	1245.12
-1013.61											
1	6	660	-547.29	-6725.31	-620.53	-6652.07	-668.66	2033.08	-544.75	167.87	1320.45
-1152.91											
1	6	661	-400.18	-7477.20	-561.76	-7315.62	-1057.06	1247.39	-1138.02	85.24	24.13
-1192.31											
1	6	662	-781.28	-6083.87	-820.65	-6044.51	-455.17	1461.26	-2755.24	476.17	-1770.16
-1784.16											
1	6	663	-333.12	-5581.83	-395.88	-5519.06	-570.53	1939.50	-3625.96	195.42	-1881.88
-2581.63											
1	6	664	-96.87	-1731.43	-103.02	-1725.28	-100.11	76.01	-395.67	15.13	-334.79
158.14											
1	6	665	743.45	-406.58	23.85	313.01	556.54	-31.01	-486.34	-483.99	-33.36
32.60											
1	6	666	-28.56	-2639.68	-317.57	-2350.67	819.22	859.56	-292.40	323.95	243.21
574.56											
1	6	667	-227.00	-4739.40	-232.08	-4734.32	-151.36	2515.82	-269.99	-171.25	2417.08
515.10											
1	6	668	-294.12	-6366.99	-300.66	-6360.45	199.26	3298.96	-150.09	-111.36	3260.23
363.42											
1	6	669	-190.23	-7343.72	-239.49	-7294.46	591.60	2157.14	-208.89	-202.23	2150.48
125.34											
1	6	670	-208.06	-7785.84	-254.35	-7739.55	-590.48	619.71	-96.34	618.98	-95.60
-22.97											
1	6	671	-32.54	-8439.03	-97.95	-8373.61	738.65	93.11	-151.10	-123.41	65.42
77.43											
1	6	672	-288.46	-8717.98	-291.06	-8715.39	147.80	858.78	-168.91	-75.03	764.90
-296.08											
1	6	673	-80.71	-9045.37	-177.32	-8948.76	925.60	210.18	-1057.04	-165.58	-681.28
-578.77											
1	6	674	-641.24	-5416.97	-726.59	-5331.62	-632.69	740.93	-2806.87	612.04	-2677.98
-663.83											
1	6	675	116.85	-4766.22	59.57	-4708.95	525.74	-25.58	-1447.28	-85.17	-1387.69
-284.90											
1	6	676	200.84	-1234.17	190.15	-1223.48	123.38	761.47	-590.10	-410.18	581.55
-459.13											
1	6	677	-97.94	-2343.33	-100.53	-2340.74	76.22	415.01	-107.03	-48.20	356.18
-165.09											
1	6	678	1368.72	27.16	1202.05	193.83	-442.51	-81.43	-232.80	-224.18	-90.04
-35.07											
1	6	679	131.95	-4515.20	116.77	-4500.02	-265.15	455.77	-143.70	20.45	291.63
-267.32											
1	6	680	186.75	-5573.43	172.55	-5559.23	-285.67	324.79	-171.05	47.26	106.49

Viale Duca Alessandro n. 11 – 43123 Parma
Cell. 335 1403156 – E mail ing.concari@gmail.com
Sito web: studioaire.it – P.IVA 02561480340

246.15												
1	6	681	196.31	-6162.33	183.45	-6149.46	-285.69	177.98	-131.61	55.72	-9.34	-
151.34												
1	6	682	196.17	-6434.82	184.25	-6422.90	-280.92	60.96	-62.02	55.67	-56.72	-
24.96												
1	6	683	192.98	-6440.65	181.57	-6429.24	-274.84	112.31	-120.82	49.83	-58.34	
103.26												
1	6	684	188.58	-6175.15	177.07	-6163.64	-270.34	218.80	-211.67	39.14	-32.00	
212.28												
1	6	685	184.34	-5594.36	171.57	-5581.58	-271.41	303.61	-270.44	24.69	8.48	
286.91												
1	6	686	182.38	-4617.48	165.25	-4600.34	-286.31	349.98	-285.65	8.85	55.48	
316.96												
1	6	687	184.97	-3140.57	151.61	-3107.21	-331.43	364.76	-238.93	-4.01	129.84	
294.33												
1	6	688	292.21	-1223.28	127.68	-1058.75	-471.45	440.11	-104.21	-20.70	356.59	
196.17												
1	6	689	574.21	32.18	541.75	64.64	-128.61	469.29	-175.05	-121.37	415.60	
178.07												
1	6	690	-1321.73	-3632.32	-3085.19	-1868.86	982.27	604.43	-290.27	407.23	-93.08	-
370.87												
1	6	691	916.29	-1052.83	-1015.10	878.56	269.96	1024.46	12.80	497.05	540.21	
505.37												
1	6	692	-1337.21	-3924.15	-3631.22	-1630.14	-819.75	1420.54	-241.49	1302.23	-123.18	
427.36												
1	6	693	1243.75	-3118.18	-2785.07	910.64	1158.46	2529.41	313.04	1743.39	1099.06	-
1060.32												
1	46	17	2718.52	-1486.55	2059.18	-827.21	1529.00	285.46	-252.67	50.13	-17.35	
266.94												
1	46	25	4029.27	-1450.81	3790.68	-1212.22	1118.31	110.76	-800.35	-219.66	-469.93	
438.03												
1	46	33	5354.94	-1616.87	5223.16	-1485.08	949.42	73.76	-1275.35	-333.97	-867.62	
619.54												
1	46	41	6467.81	-1784.42	6363.73	-1680.33	920.90	131.06	-1753.55	-402.55	-1219.94	
849.06												
1	46	49	7356.34	-1899.08	7261.36	-1804.11	932.76	6.14	-1979.71	-456.00	-1517.56	
839.15												
1	46	57	8042.15	-1966.78	7956.13	-1880.76	923.91	-136.97	-2125.63	-504.29	-1758.32	
771.72												
1	46	65	8544.02	-2110.44	8463.13	-2029.55	924.80	-285.49	-2205.63	-543.79	-1947.34	
655.17												
1	46	73	8862.70	-2138.51	8786.71	-2062.52	911.19	-429.10	-2235.86	-572.73	-2092.23	
488.75												
1	46	81	8943.42	-2160.52	8872.56	-2089.65	884.22	-541.98	-2260.33	-592.88	-2209.43	
291.33												
1	46	89	8850.72	-2174.76	8785.74	-2109.78	843.94	-601.87	-2283.77	-605.08	-2280.56	
73.38												
1	46	97	8638.32	-2188.55	8580.64	-2130.87	788.13	-590.25	-2345.40	-608.30	-2327.35	-
177.09												
1	46	105	8241.30	-2194.55	8192.83	-2146.07	709.58	-497.01	-2454.99	-607.14	-2344.86	-
451.12												
1	46	113	7640.98	-2208.70	7605.37	-2173.09	591.11	-320.78	-2605.61	-597.28	-2329.11	-
745.19												
1	46	121	6771.76	-2226.50	6754.59	-2209.33	392.66	-48.90	-2772.92	-555.01	-2266.80	-
1059.49												
1	46	129	5502.78	-2289.52	5502.55	-2289.30	41.77	320.95	-2881.25	-444.89	-2115.42	-
1365.96												
1	46	137	3624.83	-2535.66	3553.65	-2464.49	-658.32	842.41	-2716.62	-149.66	-1724.54	-
1595.81												
1	46	145	999.40	-3135.17	121.23	-2257.00	-1691.06	1596.61	-1612.75	645.96	-662.09	-
1465.35												
1	46	165	358.31	-1158.43	-1080.59	280.47	334.66	852.28	-1023.33	-231.93	60.88	-
926.30												
1	46	173	190.21	-3670.89	-3588.21	107.52	-558.94	1030.69	-937.49	17.18	76.02	-
983.65												
1	46	181	28.65	-6297.95	-6124.87	-144.43	-1032.01	991.89	-886.03	130.53	-24.67	-
935.75												
1	46	189	-111.74	-8416.13	-8204.46	-323.41	-1308.80	867.80	-845.61	170.68	-148.49	-
841.71												
1	46	197	77.65	-1.003e+04	-9813.17	-143.25	-1478.16	721.59	-802.13	180.05	-260.59	-
729.31												
1	46	205	0.74	-1.122e+04	-1.099e+04	-225.20	-1575.90	579.60	-751.89	178.88	-351.17	-
610.72												
1	46	213	-54.74	-1.200e+04	-1.178e+04	-280.02	-1625.14	453.39	-696.38	175.69	-418.68	-
492.11												
1	46	221	-96.20	-1.243e+04	-1.220e+04	-318.49	-1640.58	345.35	-634.77	173.99	-463.41	-
372.27												
1	46	229	-135.21	-1.260e+04	-1.238e+04	-353.66	-1635.39	254.98	-583.25	175.76	-504.03	-
245.21												
1	46	237	-151.65	-1.248e+04	-1.226e+04	-369.27	-1623.13	200.68	-518.02	181.90	-499.24	-
114.65												
1	46	245	-157.84	-1.204e+04	-1.182e+04	-381.75	-1615.73	191.93	-478.47	190.92	-477.46	
26.05												
1	46	253	-156.22	-1.145e+04	-1.122e+04	-392.72	-1617.24	255.20	-477.42	208.68	-430.91	
178.64												
1	46	261	-157.26	-1.082e+04	-1.057e+04	-408.08	-1615.88	395.68	-510.08	239.84	-354.25	
341.85												
1	46	269	-211.18	-1.021e+04	-9979.83	-439.09	-1492.09	361.13	-311.40	292.57	-242.84	
203.48												
1	46	277	-305.99	-9622.63	-9418.75	-509.87	-1363.03	577.65	-284.42	384.09	-90.86	
359.72												
1	46	285	-390.21	-8537.63	-8346.73	-581.12	-1232.45	815.65	-256.22	477.91	81.52	
497.94												
1	46	293	223.31	-5915.92	-5665.13	-27.48	-1215.22	814.43	-397.58	178.95	237.91	
605.29												
1	46	307	-992.09	-1734.11	-1477.91	-1248.29	352.80	626.23	-1190.46	-694.06	129.83	-
809.56												
1	46	315	-781.92	-2798.70	-2181.32	-1399.30	929.50	218.63	-1817.73	-1625.39	26.30	-

Viale Duca Alessandro n. 11 – 43123 Parma
Cell. 335 1403156 – E mail ing.concari@gmail.com
Sito web: studioaire.it – P.IVA 02561480340

595.54												
1	46	323	-369.13	-3332.16	-2352.18	-1349.11	1394.04	-107.37	-2129.63	-2106.40	-130.61	-
215.51												
1	46	331	129.63	-3695.61	-2352.40	-1213.58	1825.89	-237.69	-2289.51	-2288.15	-239.05	
52.79												
1	46	339	317.37	-4029.80	-2286.98	-1425.46	2130.47	-215.63	-2337.32	-2259.79	-293.16	
398.08												
1	46	347	468.47	-4182.95	-2176.74	-1537.74	2303.66	-72.56	-2315.62	-2083.65	-304.54	
683.02												
1	46	355	619.13	-4119.22	-1981.62	-1518.47	2357.83	130.29	-2070.93	-1654.18	-286.46	
862.36												
1	46	363	716.46	-3834.29	-1781.45	-1336.38	2264.47	256.54	-1877.37	-1357.02	-263.80	
916.30												
1	46	371	778.95	-3165.49	-1407.82	-978.72	1960.52	331.69	-1498.80	-933.74	-233.36	
845.60												
1	46	379	828.69	-2132.62	-833.08	-470.85	1469.54	367.48	-1009.33	-470.50	-171.35	
671.96												
1	46	387	923.49	-867.84	-105.86	161.51	885.64	464.49	-392.45	33.17	38.88	
428.46												
1	46	395	2179.75	-2565.05	-2362.80	1977.50	-958.50	1440.08	-1135.30	-621.71	926.49	
1029.04												
1	46	403	2467.31	-1739.15	-1275.46	2003.63	-1317.37	2867.80	-1033.45	-650.26	2484.61	
1161.07												
1	46	407	3022.42	373.05	2905.87	489.60	543.33	316.08	228.16	300.30	243.94	-
33.73												
1	46	408	5445.20	258.07	5387.87	315.40	542.32	250.13	51.43	54.56	247.01	
24.72												
1	46	409	7131.20	359.17	7103.44	386.93	432.72	286.35	-68.48	-51.71	269.58	
75.30												
1	46	410	8449.06	397.60	8437.04	409.61	310.85	469.54	-271.79	-77.99	275.74	
325.75												
1	46	411	2191.17	-1942.42	-646.34	895.08	-1917.72	4748.72	-100.68	143.21	4504.83	
1059.83												
1	46	415	9508.53	435.01	9504.24	439.30	197.27	467.06	-318.66	-118.58	266.98	
342.31												
1	46	416	1.034e+04	464.09	1.034e+04	464.85	86.62	435.33	-347.70	-162.15	249.78	
332.96												
1	46	417	1.100e+04	486.49	1.100e+04	486.52	-17.85	381.32	-355.45	-203.41	229.27	
298.17												
1	46	418	1.136e+04	503.33	1.136e+04	504.60	-117.39	300.78	-331.16	-238.59	208.21	
223.45												
1	46	419	877.89	-3694.75	-453.12	-2363.74	-2077.17	4318.26	-166.34	71.27	4080.65	
1004.55												
1	46	423	1.158e+04	518.65	1.157e+04	522.68	-211.12	231.25	-310.21	-268.00	189.03	
145.18												
1	46	424	1.160e+04	528.61	1.159e+04	536.67	-298.58	170.75	-295.78	-291.24	166.21	
45.78												
1	46	425	1.152e+04	535.59	1.150e+04	548.83	-381.15	159.32	-323.48	-310.90	146.73	-
76.92												
1	46	426	1.124e+04	535.18	1.122e+04	555.35	-464.30	213.95	-417.47	-329.91	126.38	-
218.22												
1	46	427	667.19	-6736.17	-59.70	-6009.27	-2202.98	2226.04	-745.92	-557.38	2037.49	
724.43												
1	46	435	444.70	-7592.42	-386.69	-6761.03	-2447.61	-1536.55	-2579.84	-2578.63	-1537.76	
35.46												
1	46	443	-33.12	-5367.27	-816.50	-4583.88	-1888.13	758.75	-325.02	-248.61	682.34	-
277.43												
1	46	447	1.064e+04	518.17	1.061e+04	549.40	-561.31	318.61	-558.68	-344.43	104.37	-
376.90												
1	46	448	9675.52	463.37	9622.03	516.86	-699.96	463.40	-714.47	-332.61	81.55	-
551.33												
1	46	449	8117.17	318.56	8004.71	431.01	-929.70	662.10	-790.55	-198.43	69.97	-
713.82												
1	46	450	5556.16	-107.08	5250.44	198.64	-1279.80	946.21	-563.20	271.55	111.46	-
750.45												
1	46	451	202.66	-7417.98	-238.43	-6976.89	-1779.55	742.90	-515.68	-37.68	264.90	-
610.83												
1	46	455	2343.87	-610.42	1367.49	365.96	-1389.67	1460.91	117.71	1243.08	335.55	-
495.12												
1	46	456	2004.60	-796.48	-606.09	1814.21	-705.02	1569.48	127.47	1377.55	319.41	-
489.83												
1	46	457	-361.71	-1155.47	-1134.20	-382.98	128.20	817.90	-152.75	422.55	242.61	-
476.91												
1	46	458	28.25	-546.28	-362.43	-155.61	-268.01	165.51	-0.27	90.12	75.12	
82.55												
1	46	459	857.56	-1.162e+04	684.14	-1.144e+04	-1460.49	-244.83	-2619.25	-636.16	-2227.92	-
880.93												
1	46	467	1017.87	-1.293e+04	926.20	-1.284e+04	-1126.90	-1788.51	-6029.24	-2373.27	-5444.48	-
1462.14												
1	46	475	-426.41	-2636.52	-439.01	-2623.92	-166.41	546.52	-3253.42	-184.29	-2522.61	-
1497.65												
1	46	476	208.49	-4243.09	-4105.92	71.32	769.28	1727.10	-1731.19	-467.05	462.96	-
1665.45												
1	46	477	363.21	-5691.80	-4889.11	-439.47	2053.28	1284.95	-1653.62	-1015.16	646.49	-
1211.83												
1	46	478	638.08	-6682.99	-5182.70	-862.21	2955.14	682.31	-1552.48	-1456.48	586.31	-
453.13												
1	46	479	770.43	-7425.27	-5159.48	-1495.36	3665.50	448.11	-1740.21	-1740.12	448.01	-
14.33												
1	46	480	1389.57	-7797.10	-4971.95	-1435.58	4239.37	388.48	-1969.85	-1863.29	281.91	
489.86												
1	46	481	1707.53	-7933.65	-4664.46	-1561.66	4564.13	443.98	-2198.98	-1848.85	93.85	
895.99												
1	46	482	2067.24	-7660.35	-4191.01	-1402.10	4659.62	529.19	-2285.91	-1666.53	-90.19	
1166.18												
1	46	483	2065.45	-7144.37	-3568.34	-1510.59	4488.50	548.45	-2265.57	-1431.39	-285.73	
1285.12												
1	46	484	2035.31	-6082.27	-2666.02	-1380.94	4007.61	520.81	-2081.32	-1125.16	-435.35	

Viale Duca Alessandro n. 11 – 43123 Parma
Cell. 335 1403156 – E mail ing.concari@gmail.com
Sito web: studioaire.it – P.IVA 02561480340

1254.51												
1	46	485	1921.52	-4577.15	-1380.31	-1275.33	3248.91	474.22	-1730.97	-746.82	-509.94	
1096.22												
1	46	486	1741.10	-3003.25	164.28	-1426.44	2234.87	435.57	-1250.00	-347.34	-467.08	
840.65												
1	46	487	419.86	-4962.37	-4889.61	347.10	621.56	2497.74	-1378.98	165.39	953.36	-
1897.90												
1	46	488	379.41	-6039.02	-5436.99	-222.62	1871.27	2439.11	-768.66	166.74	1503.72	-
1457.93												
1	46	489	431.18	-6701.42	-5476.03	-794.21	2690.47	1832.71	-200.01	27.04	1605.66	-
640.31												
1	46	490	687.25	-7066.23	-5262.21	-1116.77	3276.11	1477.29	-186.48	-170.81	1461.62	-
160.72												
1	46	491	961.99	-7195.51	-4884.06	-1349.46	3675.98	1283.54	-474.04	-369.66	1179.16	
415.41												
1	46	492	1224.25	-7090.98	-4370.82	-1495.90	3901.21	1269.12	-982.49	-539.16	825.79	
895.36												
1	46	493	1525.68	-6623.14	-3667.52	-1429.94	3917.80	1195.72	-1493.59	-679.72	381.86	
1235.46												
1	46	494	1666.63	-5869.07	-2788.66	-1413.78	3704.61	1042.55	-1870.43	-745.54	-82.35	
1418.24												
1	46	495	1681.48	-4871.20	-1634.92	-1554.81	3276.09	845.00	-2050.36	-735.39	-469.97	
1441.58												
1	46	496	1771.23	-3791.69	-176.14	-1844.32	2653.45	604.81	-2029.31	-656.71	-767.78	
1315.89												
1	46	497	2297.66	-3038.14	1550.03	-2290.51	1852.10	359.31	-1775.89	-509.18	-907.41	
1048.87												
1	46	498	159.37	-5966.41	-5954.39	147.35	271.14	2806.60	-992.50	500.27	1313.83	-
1855.49												
1	46	499	177.77	-6329.16	-5937.17	-214.21	1548.21	3146.92	-137.67	794.05	2215.21	-
1480.61												
1	46	500	294.64	-6604.37	-5703.17	-606.57	2324.92	2774.99	592.31	864.92	2502.39	-
721.59												
1	46	501	411.94	-6701.12	-5288.72	-1000.47	2837.54	2431.83	733.37	775.84	2389.37	-
265.18												
1	46	502	626.46	-6575.40	-4731.45	-1217.48	3143.20	2087.92	522.58	585.45	2025.06	
307.33												
1	46	503	854.82	-6284.80	-4038.37	-1391.60	3315.45	1929.46	-61.36	347.51	1520.59	
804.25												
1	46	504	1180.75	-5671.57	-3148.16	-1342.67	3305.09	1686.33	-806.61	22.71	857.02	
1174.59												
1	46	505	1343.34	-4931.57	-2078.70	-1509.53	3124.52	1373.13	-1444.61	-223.03	151.56	
1396.37												
1	46	506	1552.44	-4129.82	-752.86	-1824.53	2790.14	1037.21	-1887.83	-393.07	-457.56	
1462.16												
1	46	507	2081.53	-3510.32	846.30	-2275.09	2319.79	651.98	-2135.86	-506.74	-977.13	
1373.93												
1	46	508	3195.33	-3373.17	2704.28	-2882.12	1727.52	270.50	-2137.15	-530.10	-1336.55	
1134.28												
1	46	509	-192.22	-7085.27	-7082.16	-195.34	-146.56	2869.77	-625.50	673.46	1570.81	-
1689.06												
1	46	510	-192.17	-6650.13	-6459.60	-382.70	1092.78	3572.92	348.30	1138.47	2782.76	-
1386.95												
1	46	511	-70.83	-6479.56	-5888.33	-662.06	1854.58	3505.55	1096.49	1349.69	3252.35	-
738.83												
1	46	512	64.12	-6285.38	-5257.37	-963.89	2338.93	3250.37	1299.40	1354.61	3195.16	-
323.50												
1	46	513	283.58	-5958.42	-4529.60	-1145.24	2622.43	2809.95	1176.34	1202.13	2784.16	
203.64												
1	46	514	505.41	-5515.18	-3682.70	-1327.07	2770.31	2466.12	644.59	947.12	2163.60	
677.89												
1	46	515	819.79	-4874.12	-2648.70	-1405.63	2778.28	2037.68	-215.07	507.45	1315.16	
1051.49												
1	46	516	1099.94	-4227.93	-1441.89	-1686.09	2661.14	1582.42	-1011.76	168.22	402.44	
1291.79												
1	46	517	1614.65	-3682.91	3.26	-2071.53	2437.18	1143.47	-1650.14	-102.84	-403.83	
1388.67												
1	46	518	2573.44	-3464.65	1703.50	-2594.71	2120.37	655.37	-2133.73	-348.16	-1130.21	
1338.61												
1	46	519	4069.91	-3650.51	3664.78	-3245.38	1721.52	181.85	-2396.39	-510.16	-1704.38	
1142.50												
1	46	520	-311.27	-8109.89	-8075.04	-346.12	-520.13	2804.35	-283.68	764.59	1756.08	-
1462.27												
1	46	521	1091.64	606.56	722.21	975.99	206.70	350.33	152.44	342.46	160.32	
38.68												
1	46	522	-518.94	-7018.26	-6962.35	-574.85	600.23	3830.01	732.80	1332.79	3230.02	-
1224.06												
1	46	523	-603.70	-6379.74	-6059.88	-923.55	1321.06	4066.19	1435.33	1636.52	3865.00	-
699.16												
1	46	524	-402.35	-5875.17	-5208.10	-1069.42	1790.46	3922.16	1664.12	1713.14	3873.13	-
329.09												
1	46	525	-181.05	-5360.87	-4319.77	-1222.15	2075.77	3450.21	1593.53	1602.63	3441.10	
129.70												
1	46	526	69.93	-4808.51	-3342.60	-1395.99	2236.62	2931.33	1159.49	1354.99	2735.82	
555.15												
1	46	527	437.56	-4188.68	-2200.56	-1550.55	2290.17	2326.03	361.81	949.27	1738.57	
899.32												
1	46	528	923.40	-3687.64	-896.35	-1867.89	2253.76	1693.82	-584.96	455.14	653.72	
1135.06												
1	46	529	1771.48	-3408.21	631.16	-2267.89	2146.20	1171.18	-1365.33	128.29	-322.44	
1248.07												
1	46	530	3068.83	-3489.14	2404.81	-2825.12	1978.31	609.47	-2055.53	-211.63	-1234.42	
1230.46												
1	46	531	4813.52	-3873.43	4441.10	-3501.01	1759.68	74.36	-2567.35	-486.69	-2006.30	
1080.44												
1	46	532	-372.75	-8936.17	-8855.64	-453.28	-826.53	2678.10	30.51	815.97	1892.64	-
1209.39												
1	46	533	-740.13	-7386.19	-7383.76	-742.57	127.29	3923.97	1105.36	1449.20	3580.13	-

Viale Duca Alessandro n. 11 – 43123 Parma
Cell. 335 1403156 – E mail ing.concari@gmail.com
Sito web: studioaire.it – P.IVA 02561480340

922.45												
1	46	534	-979.05	-6317.99	-6204.50	-1092.53	770.08	4500.46	1671.19	1815.05	4356.61	-
621.54												
1	46	535	-885.39	-5500.18	-5154.37	-1231.19	1215.00	4464.38	1909.24	1944.66	4428.95	-
298.75												
1	46	536	-705.79	-4788.80	-4124.01	-1370.58	1507.45	3994.94	1867.92	1871.28	3991.57	
84.55												
1	46	537	-430.01	-4144.81	-3040.29	-1534.53	1697.97	3343.21	1522.37	1639.17	3226.41	
446.13												
1	46	538	36.84	-3585.22	-1819.64	-1728.75	1810.46	2534.28	788.99	1209.53	2113.74	
746.40												
1	46	539	782.42	-3266.76	-449.03	-2035.31	1862.77	1746.30	-187.44	668.56	890.30	
960.49												
1	46	540	1928.45	-3276.10	1132.92	-2480.57	1872.83	1146.94	-1066.29	308.77	-228.11	
1073.56												
1	46	541	3483.73	-3524.51	2956.38	-2997.16	1848.70	530.66	-1932.55	-101.23	-1300.66	
1075.73												
1	46	542	5395.73	-4015.38	5046.97	-3666.62	1777.79	-43.99	-2668.08	-466.64	-2245.44	
964.59												
1	46	543	-378.97	-9546.97	-9395.91	-530.03	-1167.09	2530.45	314.84	849.39	1995.90	-
947.94												
1	46	544	-853.75	-7705.42	-7681.50	-877.67	-404.13	4055.28	1324.04	1527.44	3851.88	-
717.05												
1	46	545	-1241.13	-6307.37	-6296.70	-1251.80	232.26	4833.53	1846.55	1937.22	4742.86	-
512.46												
1	46	546	-1297.14	-5195.78	-5089.74	-1403.18	634.17	4892.20	2085.52	2106.44	4871.28	-
241.43												
1	46	547	-1227.06	-4262.34	-3946.70	-1542.70	926.51	4437.74	2061.82	2063.55	4436.00	
64.19												
1	46	548	-972.32	-3511.58	-2783.58	-1700.32	1148.30	3697.01	1779.90	1847.82	3629.09	
354.40												
1	46	549	-371.52	-3045.90	-1511.32	-1906.10	1322.54	2726.10	1216.80	1512.65	2430.25	
599.16												
1	46	550	645.31	-2976.63	-101.27	-2230.05	1465.16	1756.54	178.48	836.04	1098.98	
778.00												
1	46	551	2051.87	-3175.22	1511.12	-2634.48	1591.89	1084.43	-766.49	452.71	-134.77	
877.60												
1	46	552	3785.96	-3551.04	3363.94	-3129.01	1708.29	433.63	-1784.96	-10.98	-1340.35	
888.11												
1	46	553	5828.59	-4116.50	5490.68	-3778.60	1801.75	-161.46	-2716.85	-448.61	-2429.69	
807.06												
1	46	554	-393.48	-9940.42	-9748.41	-585.49	-1340.24	2370.37	580.91	875.67	2075.60	-
663.77												
1	46	555	-885.65	-7971.74	-7873.77	-983.62	-827.40	4164.64	1481.90	1588.56	4057.97	-
524.20												
1	46	556	-1368.60	-6365.90	-6343.00	-1391.50	-337.52	5080.21	1986.41	2031.93	5034.69	-
372.49												
1	46	557	-1564.85	-5022.86	-5021.24	-1566.47	74.95	5214.75	2223.04	2231.84	5205.95	-
162.04												
1	46	558	-1658.48	-3855.77	-3798.86	-1715.39	349.02	4775.41	2211.90	2213.53	4773.78	
64.59												
1	46	559	-1536.66	-2921.26	-2587.22	-1870.70	592.40	3976.96	1972.89	2012.34	3937.50	
278.41												
1	46	560	-772.07	-2593.67	-1293.01	-2072.73	823.15	2856.37	1498.68	1677.25	2677.80	
458.86												
1	46	561	509.31	-2770.86	125.83	-2387.38	1053.96	1730.70	512.91	976.66	1266.95	
591.34												
1	46	562	2086.61	-3116.32	1738.71	-2768.41	1299.64	995.05	-477.82	572.98	-55.75	
665.97												
1	46	563	3921.30	-3564.20	3591.43	-3234.33	1536.37	334.17	-1632.73	66.37	-1364.93	
674.55												
1	46	564	6043.54	-4178.13	5723.87	-3858.45	1779.16	-265.59	-2732.65	-429.71	-2568.53	
614.79												
1	46	565	-391.78	-1.010e+04	-9867.23	-628.22	-1496.81	2247.86	790.18	901.12	2136.92	-
386.52												
1	46	566	-882.34	-8090.99	-7907.09	-1066.24	-1136.57	4272.40	1606.65	1647.06	4231.99	-
325.68												
1	46	567	-1379.58	-6424.24	-6290.40	-1513.42	-810.71	5291.95	2107.30	2120.60	5278.65	-
205.41												
1	46	568	-1634.65	-4987.11	-4903.19	-1718.58	-523.74	5507.70	2345.93	2347.22	5506.42	-
63.67												
1	46	569	-1844.50	-3680.84	-3642.63	-1882.71	-262.11	5085.12	2347.49	2349.96	5082.65	
82.19												
1	46	570	-2038.47	-2417.84	-2417.83	-2038.48	1.91	4250.40	2139.15	2161.36	4228.19	
215.41												
1	46	571	-1061.48	-2301.90	-1131.09	-2232.29	285.49	3015.67	1738.49	1826.99	2927.16	
324.36												
1	46	572	394.86	-2613.72	270.52	-2489.38	598.85	1704.74	839.31	1110.15	1433.91	
401.30												
1	46	573	2045.52	-3071.84	1862.40	-2888.72	950.56	909.17	-184.74	685.37	39.06	
441.28												
1	46	574	3942.46	-3568.50	3696.54	-3322.57	1336.66	259.03	-1489.61	140.63	-1371.22	
439.33												
1	46	575	6120.07	-4224.28	5815.99	-3920.20	1747.30	-340.46	-2735.21	-406.38	-2669.30	
391.81												
1	46	576	-374.07	-1.001e+04	-9720.11	-659.16	-1632.32	2194.37	915.73	926.17	2183.93	-
115.10												
1	46	577	-836.18	-8052.42	-7749.60	-1138.99	-1446.89	4325.70	1698.25	1700.88	4323.07	-
83.00												
1	46	578	-1303.52	-6437.40	-6110.80	-1630.11	-1253.01	5398.46	2199.11	2199.20	5398.37	-
16.84												
1	46	579	-1522.48	-5059.85	-4712.32	-1870.01	-1052.89	5616.40	2446.36	2447.21	5615.55	
52.03												
1	46	580	-1666.44	-3845.69	-3459.76	-2052.37	-831.92	5187.40	2462.09	2466.91	5182.58	
114.57												
1	46	581	-1629.88	-2841.48	-2261.84	-2209.52	-605.24	4323.07	2275.83	2288.89	4310.01	
163.00												
1	46	582	-959.26	-2448.71	-1016.10	-2391.86	-285.37	3023.50	1920.84	1956.15	2988.19	

Viale Duca Alessandro n. 11 – 43123 Parma
Cell. 335 1403156 – E mail ing.concari@gmail.com
Sito web: studioaire.it – P.IVA 02561480340

194.13												
1	46	583	345.81	-2587.98	339.54	-2581.72	135.46	1603.06	1113.90	1229.93	1487.03	
208.07												
1	46	584	1960.13	-3075.50	1889.60	-3004.98	591.75	840.82	-2.03	785.91	52.88	
207.99												
1	46	585	3865.14	-3574.51	3694.77	-3404.15	1112.85	232.23	-1406.56	209.62	-1383.95	
191.17												
1	46	586	6081.88	-4251.58	5801.12	-3970.82	1679.99	-370.46	-2746.84	-378.69	-2738.61	
139.59												
1	46	587	-349.17	-9721.07	-9385.17	-685.07	-1742.18	2245.95	924.62	950.99	2219.58	
184.79												
1	46	588	-767.54	-7886.15	-7445.15	-1208.55	-1716.06	4385.20	1736.00	1748.44	4372.76	
181.11												
1	46	589	-1151.48	-6426.28	-5824.67	-1753.09	-1676.74	5458.75	2253.14	2264.41	5447.48	
189.73												
1	46	590	-1239.99	-5248.98	-4457.16	-2031.81	-1596.07	5665.50	2516.57	2527.31	5654.76	
183.66												
1	46	591	-1222.48	-4267.01	-3255.39	-2234.10	-1434.06	5215.86	2549.83	2559.51	5206.18	
160.36												
1	46	592	-1066.25	-3453.09	-2125.80	-2393.54	-1185.89	4325.96	2383.10	2390.54	4318.51	
120.04												
1	46	593	-601.31	-2917.41	-959.82	-2558.90	-837.74	2996.24	2056.15	2061.18	2991.20	
68.59												
1	46	594	359.00	-2776.43	311.31	-2728.74	-383.74	1484.16	1330.62	1333.34	1481.44	
20.25												
1	46	595	1789.04	-3062.46	1782.75	-3056.17	174.56	874.10	33.75	873.54	34.32	-
21.76												
1	46	596	3627.24	-3584.53	3527.78	-3485.07	841.07	279.00	-1419.07	272.49	-1412.56	-
104.90												
1	46	597	5856.31	-4269.63	5602.94	-4016.27	1581.56	-342.02	-2792.04	-349.65	-2784.40	-
136.57												
1	46	598	-334.64	-9274.02	-8888.32	-720.35	-1816.38	2417.43	800.44	975.93	2241.94	
502.96												
1	46	599	-685.09	-7595.87	-6985.05	-1295.91	-1961.66	4451.44	1706.75	1786.59	4371.60	
461.26												
1	46	600	-945.74	-6367.95	-5409.91	-1903.78	-2068.06	5470.54	2256.62	2309.87	5417.29	
410.28												
1	46	601	-875.09	-5461.75	-4115.18	-2221.66	-2088.78	5630.84	2544.06	2579.51	5595.39	
328.90												
1	46	602	-698.78	-4754.56	-3009.22	-2444.12	-2008.11	5139.42	2601.09	2620.11	5120.40	
218.89												
1	46	603	-482.68	-4116.11	-1989.91	-2608.87	-1790.16	4221.56	2455.22	2459.55	4217.22	
87.43												
1	46	604	-152.50	-3533.43	-942.38	-2743.55	-1430.60	2899.74	2134.57	2137.24	2897.07	-
45.12												
1	46	605	457.90	-3159.66	204.50	-2906.25	-923.30	1543.84	1274.52	1419.16	1399.20	-
134.29												
1	46	606	1571.63	-3208.05	1556.91	-3193.33	-264.84	1050.84	-135.23	949.30	-33.69	-
331.84												
1	46	607	3243.27	-3620.24	3203.82	-3580.79	518.86	420.17	-1543.20	331.92	-1454.96	-
406.79												
1	46	608	5432.84	-4280.28	5220.85	-4068.30	1419.19	-240.48	-2880.83	-315.88	-2805.44	-
439.76												
1	46	609	-353.20	-8673.81	-8246.55	-780.46	-1836.45	2666.48	580.12	999.16	2247.44	
835.87												
1	46	610	-629.75	-7143.01	-6352.76	-1419.99	-2126.64	4517.83	1593.99	1800.21	4311.61	
748.62												
1	46	611	-699.93	-6245.08	-4848.58	-2096.43	-2406.99	5430.71	2180.39	2309.99	5301.11	
635.96												
1	46	612	-421.41	-5701.06	-3674.96	-2447.51	-2567.49	5510.31	2492.16	2571.67	5430.79	
483.39												
1	46	613	-130.08	-5274.46	-2711.91	-2692.63	-2572.17	4951.02	2578.90	2615.00	4914.92	
290.39												
1	46	614	89.61	-4805.05	-1840.43	-2875.00	-2392.04	3995.79	2460.84	2463.87	3992.76	
68.13												
1	46	615	307.12	-4261.45	-944.99	-3009.35	-2037.78	2721.32	2121.05	2153.04	2689.32	-
134.84												
1	46	616	628.62	-3767.26	37.71	-3176.35	-1499.47	1724.07	964.59	1466.13	1222.53	-
359.68												
1	46	617	1347.16	-3503.75	1224.08	-3380.67	-762.83	1257.87	-426.01	999.97	-168.10	-
606.44												
1	46	618	2729.11	-3718.47	2725.09	-3714.44	161.06	632.81	-1769.34	386.44	-1522.97	-
728.78												
1	46	619	4816.49	-4316.58	4643.65	-4143.75	1244.44	-58.57	-3017.65	-274.46	-2801.76	-
769.57												
1	46	620	-427.46	-7894.77	-7442.84	-879.40	-1780.58	2775.07	468.91	1018.60	2225.39	
982.60												
1	46	621	-571.35	-6545.04	-5522.64	-1593.75	-2249.93	4554.17	1393.07	1765.60	4181.64	
1019.23												
1	46	622	-272.83	-6060.66	-4132.30	-2201.19	-2728.09	5326.71	1986.81	2217.74	5095.78	
847.32												
1	46	623	111.61	-5950.45	-3138.57	-2700.27	-3023.10	5306.56	2309.50	2454.09	5161.96	
642.22												
1	46	624	447.63	-5796.93	-2366.21	-2983.08	-3107.01	4648.71	2432.35	2498.12	4582.94	
376.10												
1	46	625	620.57	-5500.87	-1665.71	-3214.59	-2961.13	3358.51	2352.01	2356.37	3354.15	
66.08												
1	46	626	753.79	-5044.46	-938.38	-3352.28	-2635.94	2217.14	1775.23	1909.65	2082.73	-
203.30												
1	46	627	856.27	-4528.23	-156.70	-3515.27	-2104.33	1852.81	523.09	1437.05	938.85	-
616.43												
1	46	628	1167.00	-4070.11	806.78	-3709.90	-1325.41	1415.23	-802.24	1001.98	-388.99	-
863.48												
1	46	629	2114.37	-3942.33	2100.38	-3928.34	-290.72	882.06	-2078.18	441.12	-1637.23	-
1053.98												
1	46	630	3968.45	-4449.00	3853.82	-4334.37	975.57	214.02	-3194.54	-207.46	-2773.07	-
1122.04												
1	46	631	-408.94	-6863.27	-6398.45	-873.76	-1668.54	2833.79	337.81	1025.67	2145.94	

Viale Duca Alessandro n. 11 – 43123 Parma
Cell. 335 1403156 – E mail ing.concari@gmail.com
Sito web: studioaire.it – P.IVA 02561480340

1115.22												
1	46	632	-313.88	-5862.36	-4498.57	-1677.66	-2388.94	4427.96	1178.77	1642.99	3963.74	
1137.03												
1	46	633	316.19	-5825.75	-3275.02	-2234.54	-3026.59	5139.94	1628.84	1951.79	4816.99	
1014.70												
1	46	634	831.39	-6036.08	-2523.72	-2680.96	-3432.84	5031.71	1907.40	2135.45	4803.67	
812.70												
1	46	635	1021.11	-6166.92	-1994.28	-3151.53	-3547.13	4238.42	2102.16	2224.42	4116.16	
496.23												
1	46	636	1113.61	-6058.54	-1458.00	-3486.93	-3439.59	2914.89	2060.84	2068.75	2906.97	
81.84												
1	46	637	1119.14	-5927.47	-871.56	-3936.77	-3172.51	2000.18	1376.89	1681.07	1696.00	-
311.55												
1	46	638	1095.25	-5549.88	-320.30	-4134.33	-2720.80	1676.32	102.28	1226.70	551.91	-
711.03												
1	46	639	1063.47	-4977.11	342.71	-4256.35	-1958.14	1436.12	-1228.15	923.19	-715.23	-
1050.46												
1	46	640	1494.80	-4498.10	1366.59	-4369.90	-867.12	1125.29	-2477.86	498.78	-1851.35	-
1365.62												
1	46	641	2886.26	-4626.23	2844.70	-4584.67	557.24	619.81	-3426.44	-78.59	-2728.04	-
1529.10												
1	46	642	-394.37	-5619.50	-5109.75	-904.13	-1550.38	2909.85	11.75	988.81	1932.79	
1370.03												
1	46	643	163.60	-5195.37	-3369.71	-1662.05	-2539.81	4059.24	806.43	1241.17	3624.50	
1106.86												
1	46	644	953.51	-5558.49	-2346.75	-2258.23	-3255.70	4884.55	1118.33	1456.07	4546.81	
1076.07												
1	46	645	1348.75	-6058.69	-1851.91	-2858.02	-3669.40	4738.76	1195.45	1507.40	4426.81	
1004.00												
1	46	646	1462.37	-6426.22	-1596.46	-3367.38	-3843.62	3684.04	1370.14	1595.02	3459.16	
685.41												
1	46	647	1350.59	-6627.37	-1235.00	-4041.78	-3733.96	2221.10	1673.01	1675.75	2218.36	
38.67												
1	46	648	1415.32	-6775.67	-683.96	-4676.38	-3576.06	1710.35	471.59	1006.68	1175.26	-
613.62												
1	46	649	1335.02	-6707.78	-341.70	-5031.06	-3267.13	1210.14	-278.74	742.15	189.25	-
691.20												
1	46	650	1037.95	-6324.65	-106.14	-5180.55	-2667.31	986.05	-1538.85	631.80	-1184.61	-
876.89												
1	46	651	1048.16	-5530.91	625.65	-5108.39	-1612.83	1287.28	-2989.25	609.87	-2311.84	-
1561.44												
1	46	652	1725.30	-4961.85	1717.98	-4954.53	-221.12	1062.05	-3728.61	54.09	-2720.65	-
1952.64												
1	46	653	421.01	-4395.94	-3616.27	-358.66	-1774.19	2537.86	-558.02	555.50	1424.34	
1485.73												
1	46	654	1620.92	-4851.49	-2535.95	-694.62	-3102.49	3502.49	451.98	808.59	3145.89	
980.13												
1	46	655	1265.08	-4672.04	-1688.55	-1718.41	-2968.52	4702.57	467.93	733.34	4437.16	
1026.40												
1	46	656	1542.63	-5462.83	-1105.21	-2814.99	-3396.80	4488.79	341.20	647.72	4182.28	
1085.05												
1	46	657	1674.44	-6538.52	-899.18	-3964.90	-3809.66	2954.40	-88.38	334.34	2531.68	
1052.40												
1	46	658	1660.55	-7094.94	-821.97	-4612.42	-3946.23	821.34	505.15	505.65	820.83	
12.63												
1	46	659	1561.22	-7749.52	-668.93	-5519.38	-3973.76	1364.17	-504.59	216.00	643.59	-
909.59												
1	46	660	986.58	-7823.76	-408.47	-6428.71	-3216.32	725.35	-414.24	162.87	148.24	-
569.74												
1	46	661	1296.49	-8287.75	103.52	-7094.78	-3163.94	63.63	-1992.53	-133.42	-1795.47	-
605.27												
1	46	662	1394.96	-7405.07	286.80	-6296.91	-2919.56	599.94	-4007.53	25.78	-3433.36	-
1521.78												
1	46	663	1088.76	-6268.87	507.78	-5687.89	-1984.21	1327.27	-4173.71	-42.66	-2803.79	-
2378.92												
1	46	664	1933.78	-1065.82	-725.78	1593.74	950.98	1263.99	-401.56	-316.04	1178.47	
367.59												
1	46	665	3358.92	915.52	2406.62	1867.82	1191.63	572.01	-816.33	-799.12	554.81	
153.59												
1	46	666	3008.36	-1373.12	-953.75	2588.98	1289.03	2940.86	432.63	534.20	2839.29	
494.41												
1	46	667	1122.68	-952.08	-738.08	908.68	-631.03	4368.12	22.53	66.64	4324.01	
435.62												
1	46	668	-2.29	-1721.78	-198.55	-1525.52	-546.76	3920.70	-136.03	-49.20	3833.87	
587.12												
1	46	669	352.18	-3922.93	315.92	-3886.66	-392.07	1576.34	-388.67	-386.08	1573.75	
71.25												
1	46	670	90.29	-6078.64	82.24	-6070.58	-222.79	-235.52	-949.85	-526.17	-659.20	
350.91												
1	46	671	-684.50	-8671.55	-704.57	-8651.48	399.84	695.88	-166.87	473.18	55.83	
377.55												
1	46	672	-676.07	-1.022e+04	-702.49	-1.019e+04	-501.33	373.34	-395.68	45.87	-68.22	-
380.26												
1	46	673	518.06	-1.047e+04	516.89	-1.047e+04	113.39	-188.36	-2766.79	-362.22	-2592.92	-
646.59												
1	46	674	181.66	-8099.73	87.31	-8005.38	878.89	-354.02	-4625.54	-437.71	-4541.86	-
591.99												
1	46	675	406.55	-6973.05	22.06	-6588.57	1639.98	49.12	-2410.42	37.10	-2398.41	-
171.51												
1	46	676	-536.96	-3222.13	-1099.73	-2659.36	1092.90	826.42	-263.16	369.72	193.54	-
537.62												
1	46	677	210.44	-645.10	-162.54	-272.12	-424.25	304.19	-198.00	-143.14	249.33	-
156.65												
1	46	678	2099.24	561.56	1862.45	798.36	-555.01	32.70	-326.59	-287.50	-6.39	-
111.88												
1	46	679	448.81	-801.29	143.40	-495.88	-537.14	182.11	-208.69	-201.16	174.58	-
53.72												
1	46	680	443.69	-830.32	282.59	-669.22	-423.43	18.71	-210.62	-198.05	6.15	

Viale Duca Alessandro n. 11 – 43123 Parma
Cell. 335 1403156 – E mail ing.concari@gmail.com
Sito web: studioaire.it – P.IVA 02561480340

52.18												
1	46	681	384.75	-1043.34	294.27	-952.87	-347.88	22.85	-254.09	-147.98	-83.25	
134.64												
1	46	682	330.42	-1256.15	273.82	-1199.55	-294.27	203.80	-366.08	-71.18	-91.10	
284.76												
1	46	683	284.14	-1322.39	236.11	-1274.37	-273.59	380.07	-424.62	13.47	-58.01	
400.76												
1	46	684	231.05	-1909.12	203.35	-1881.42	-241.90	534.72	-382.99	144.60	7.14	
453.68												
1	46	685	202.66	-2513.23	184.09	-2494.66	-223.80	572.22	-313.28	194.19	64.76	
437.99												
1	46	686	161.01	-2344.57	140.51	-2324.07	-225.73	539.07	-201.43	238.87	98.77	
363.56												
1	46	687	186.27	-1819.67	144.23	-1777.64	-287.31	456.39	-44.04	254.00	158.35	
245.60												
1	46	688	395.88	-966.65	185.28	-756.05	-492.54	401.71	188.20	261.19	328.71	
101.28												
1	46	689	465.36	-341.86	339.32	-215.83	-293.01	381.99	135.64	172.39	345.24	
87.76												
1	46	690	-696.42	-1238.59	-1096.88	-838.13	238.22	432.03	-394.82	-16.39	53.60	-
411.94												
1	46	691	1796.52	-433.46	-59.69	1422.75	832.94	587.20	361.80	473.09	475.92	
112.69												
1	46	692	409.37	-465.35	-455.78	399.80	-90.99	667.64	50.22	279.52	438.34	
298.32												
1	46	693	1692.96	-2386.68	-2319.64	1625.92	518.65	2325.87	239.01	1789.76	775.12	-
911.80												
1	78	17	1561.84	-1203.29	1267.41	-908.86	852.91	339.00	-427.19	-12.99	-75.21	
381.83												
1	78	25	2199.86	-1319.92	2134.12	-1254.18	476.53	224.78	-921.60	-190.09	-506.73	
550.89												
1	78	33	2831.46	-1550.27	2799.30	-1518.11	373.96	165.55	-1321.07	-272.07	-883.45	
677.54												
1	78	41	3323.04	-1733.18	3292.03	-1702.16	394.79	135.45	-1670.40	-328.14	-1206.81	
788.84												
1	78	49	3709.45	-1852.87	3673.21	-1816.64	447.50	14.05	-1859.09	-374.90	-1470.14	
759.79												
1	78	57	4015.25	-1926.58	3974.79	-1886.13	488.62	-118.19	-1972.86	-415.64	-1675.41	
680.58												
1	78	65	4249.57	-2019.06	4204.76	-1974.25	528.12	-248.98	-2029.49	-448.03	-1830.44	
561.07												
1	78	73	4409.98	-2050.30	4362.04	-2002.36	554.45	-366.98	-2048.60	-471.38	-1944.20	
405.79												
1	78	81	4467.78	-2073.30	4417.96	-2023.49	568.63	-454.17	-2061.21	-486.92	-2028.46	
227.06												
1	78	89	4449.34	-2089.52	4399.06	-2039.24	571.17	-494.80	-2078.05	-495.48	-2077.37	
32.64												
1	78	97	4376.70	-2103.34	4327.78	-2054.42	560.93	-476.58	-2121.56	-496.78	-2101.36	-
181.17												
1	78	105	4215.61	-2111.77	4170.33	-2066.50	533.33	-394.64	-2195.18	-492.63	-2097.18	-
408.46												
1	78	113	3947.43	-2120.72	3909.70	-2083.00	476.98	-249.23	-2289.88	-479.45	-2059.66	-
645.60												
1	78	121	3522.35	-2123.18	3498.62	-2099.45	365.30	-33.63	-2382.53	-441.11	-1975.04	-
889.44												
1	78	129	2845.11	-2125.14	2840.73	-2120.76	147.47	260.41	-2411.51	-346.84	-1804.26	-
1119.72												
1	78	137	1772.96	-2162.71	1749.71	-2139.46	-301.62	673.42	-2210.85	-112.11	-1425.32	-
1283.99												
1	78	145	245.55	-2290.08	-264.28	-1780.25	-1016.28	1248.55	-1305.41	450.66	-507.53	-
1183.70												
1	78	165	344.65	-500.05	-273.46	118.06	374.24	583.08	-859.08	-221.67	-54.33	-
716.21												
1	78	173	76.18	-1679.24	-1639.54	36.48	-260.97	673.99	-838.71	-50.91	-113.80	-
755.69												
1	78	181	-60.68	-3405.61	-3276.90	-189.39	-643.40	609.37	-864.04	26.14	-280.81	-
720.54												
1	78	189	-181.64	-4803.95	-4629.19	-356.40	-881.62	489.34	-899.64	46.94	-457.24	-
647.12												
1	78	197	-134.64	-5844.06	-5648.60	-330.10	-1038.14	361.78	-929.06	43.42	-610.69	-
556.42												
1	78	205	-187.90	-6577.94	-6367.12	-398.72	-1141.35	246.94	-947.87	32.22	-733.14	-
458.75												
1	78	213	-221.21	-7043.87	-6822.97	-442.11	-1207.60	153.05	-957.07	20.85	-824.88	-
359.55												
1	78	221	-241.73	-7273.66	-7045.04	-470.35	-1247.15	81.89	-957.44	12.54	-888.09	-
259.35												
1	78	229	-256.48	-7330.27	-7094.58	-492.17	-1269.51	33.93	-958.39	8.90	-933.37	-
155.58												
1	78	237	-255.59	-7207.86	-6961.49	-501.96	-1285.37	13.16	-945.51	10.59	-942.94	-
49.57												
1	78	245	-241.74	-6911.56	-6645.48	-507.81	-1305.34	21.29	-934.34	17.21	-930.26	
62.35												
1	78	253	-215.86	-6535.71	-6239.69	-511.88	-1335.36	66.49	-926.36	32.06	-891.93	
181.65												
1	78	261	-186.36	-6160.03	-5827.26	-519.13	-1370.09	155.69	-921.96	58.73	-824.99	
308.37												
1	78	269	-197.65	-5843.37	-5501.33	-539.69	-1346.87	202.24	-824.54	103.95	-726.26	
302.09												
1	78	277	-260.77	-5640.65	-5307.05	-594.37	-1297.48	372.99	-783.33	180.33	-590.67	
430.88												
1	78	285	-385.37	-5374.46	-5075.54	-684.29	-1184.05	579.14	-726.96	272.94	-420.77	
553.32												
1	78	293	-303.95	-4718.25	-4476.98	-545.22	-1003.40	659.82	-703.80	170.03	-214.02	
654.21												
1	78	307	-894.02	-1499.33	-1042.08	-1351.27	260.20	524.93	-1033.75	-585.70	76.88	-
705.42												
1	78	315	-1324.07	-2317.36	-1844.92	-1796.50	496.05	190.16	-1633.31	-1425.57	-17.58	-

Viale Duca Alessandro n. 11 – 43123 Parma
Cell. 335 1403156 – E mail ing.concari@gmail.com
Sito web: studioaire.it – P.IVA 02561480340

579.36												
1	78	323	-1416.69	-2832.63	-2123.59	-2125.73	707.97	-91.88	-1941.79	-1880.56	-153.12	-
330.95												
1	78	331	-1312.70	-3197.24	-2212.64	-2297.30	941.32	-235.98	-2088.04	-2082.89	-241.13	-
97.51												
1	78	339	-1226.78	-3500.19	-2215.12	-2511.85	1126.98	-263.91	-2123.67	-2105.04	-282.54	
185.21												
1	78	347	-1105.22	-3629.11	-2162.52	-2571.82	1245.24	-183.86	-2097.91	-1992.82	-288.95	
436.02												
1	78	355	-946.00	-3553.67	-2040.95	-2458.71	1286.99	-41.57	-1935.79	-1706.33	-271.03	
618.05												
1	78	363	-784.69	-3247.16	-1879.76	-2152.09	1223.68	88.45	-1759.43	-1427.01	-243.97	
709.76												
1	78	371	-599.54	-2627.41	-1579.93	-1647.01	1013.38	190.92	-1444.55	-1044.27	-209.36	
703.15												
1	78	379	-367.69	-1713.74	-1096.39	-985.03	670.72	264.84	-1023.70	-604.26	-154.61	
603.77												
1	78	387	-24.41	-687.10	-433.78	-277.73	322.03	364.64	-484.65	-113.27	-6.75	
421.29												
1	78	395	1093.73	-1963.60	-1771.45	901.58	-741.98	898.95	-1208.92	-502.88	192.92	
994.86												
1	78	403	114.40	-1310.66	-833.55	-362.72	-672.51	1510.78	-1359.47	-875.16	1026.47	
1074.96												
1	78	407	2062.48	366.52	2043.79	385.21	177.05	234.11	80.35	216.31	98.16	
49.20												
1	78	408	3452.58	250.95	3445.88	257.65	146.27	187.97	-47.71	37.31	102.95	
113.18												
1	78	409	4183.79	280.19	4181.08	282.90	102.80	214.64	-129.86	-31.07	115.85	
155.80												
1	78	410	4706.65	288.18	4705.99	288.84	53.95	324.39	-258.99	-57.19	122.59	
277.49												
1	78	411	412.84	-1976.39	-353.11	-1210.44	-1115.05	3256.58	-253.70	-14.55	3017.43	
884.47												
1	78	415	5130.20	299.91	5130.19	299.92	6.74	315.87	-283.85	-90.34	122.36	
280.37												
1	78	416	5475.87	309.91	5475.55	310.23	-40.61	285.20	-291.48	-123.85	117.57	
261.86												
1	78	417	5771.19	317.83	5769.83	319.19	-85.91	238.83	-282.04	-153.75	110.54	
224.41												
1	78	418	5945.34	323.61	5942.36	326.59	-129.44	177.64	-252.89	-177.92	102.67	
163.27												
1	78	419	131.32	-3393.13	-320.12	-2941.69	-1177.82	3214.90	-194.44	4.46	3016.00	
799.09												
1	78	423	6063.93	328.94	6058.85	334.02	-170.62	124.45	-225.99	-196.82	95.28	
96.81												
1	78	424	6099.27	332.00	6091.67	339.60	-209.23	86.97	-211.92	-210.79	85.84	
18.41												
1	78	425	6089.55	334.10	6079.03	344.62	-245.88	94.35	-237.91	-221.40	77.84	-
72.22												
1	78	426	5983.32	333.49	5969.10	347.71	-283.07	147.66	-308.26	-229.97	69.37	-
171.94												
1	78	427	244.28	-5281.58	-40.74	-4996.57	-1222.18	1999.21	-555.08	-419.07	1863.20	
573.51												
1	78	435	4.02	-5804.01	-371.08	-5428.91	-1427.55	-1159.23	-2140.14	-2140.11	-1159.26	5.90
1	78	443	-496.15	-4322.78	-722.91	-4096.03	-903.48	595.60	-581.36	-522.43	536.67	-
256.68												
1	78	447	5702.64	326.38	5682.71	346.31	-326.73	228.90	-401.81	-233.21	60.30	-
279.12												
1	78	448	5208.67	303.62	5177.58	334.70	-389.21	331.30	-495.01	-215.12	51.42	-
391.07												
1	78	449	4349.78	240.88	4289.88	300.77	-492.45	463.19	-529.40	-114.45	48.24	-
489.58												
1	78	450	2873.21	41.72	2715.03	199.91	-650.28	649.84	-373.98	209.26	66.60	-
506.92												
1	78	451	-70.15	-5881.88	-207.76	-5744.28	-883.62	807.29	-523.43	-130.26	414.13	-
607.14												
1	78	455	1007.77	-361.53	360.50	285.74	-683.63	1048.00	19.79	926.89	140.90	-
331.45												
1	78	456	802.14	-845.86	-728.82	685.10	-423.31	1121.56	-70.33	1020.63	30.60	-
331.83												
1	78	457	223.41	-679.89	-651.44	194.97	157.75	403.73	-55.92	198.31	149.50	-
228.53												
1	78	458	342.04	-383.00	-152.92	111.96	-337.46	81.70	-0.91	43.87	36.92	
41.16												
1	78	459	562.61	-8181.06	510.99	-8129.44	-669.85	133.35	-1657.81	-459.06	-1065.40	-
842.71												
1	78	467	706.90	-9767.53	680.22	-9740.85	-527.95	-1256.20	-4455.31	-1888.64	-3822.87	-
1274.08												
1	78	475	-627.74	-1789.59	-637.42	-1779.92	105.59	536.80	-2403.54	-183.51	-1683.23	-
1264.56												
1	78	476	-192.58	-3213.14	-3158.93	-246.79	400.99	1457.23	-1572.11	-418.54	303.67	-
1471.00												
1	78	477	-530.80	-4457.76	-4127.99	-860.58	1089.16	1065.09	-1522.94	-899.25	441.40	-
1106.87												
1	78	478	-761.79	-5264.05	-4635.44	-1390.40	1560.45	587.72	-1486.93	-1299.78	400.57	-
594.34												
1	78	479	-945.03	-5793.30	-4802.22	-1936.11	1955.19	335.86	-1593.01	-1570.18	313.03	-
208.62												
1	78	480	-764.17	-6084.44	-4773.11	-2075.49	2292.82	232.36	-1725.24	-1702.96	210.08	
207.65												
1	78	481	-624.11	-6180.56	-4605.46	-2199.21	2504.20	257.84	-1874.39	-1711.04	94.49	
567.11												
1	78	482	-394.04	-5991.75	-4284.10	-2101.69	2577.38	343.46	-1950.94	-1584.51	-22.97	
840.52												
1	78	483	-295.68	-5548.63	-3800.88	-2043.43	2475.12	417.81	-1947.24	-1378.98	-150.45	
1010.47												
1	78	484	-188.07	-4693.54	-3055.80	-1825.80	2167.16	467.74	-1824.36	-1094.71	-261.91	
1067.73												

Viale Duca Alessandro n. 11 – 43123 Parma
Cell. 335 1403156 – E mail ing.concari@gmail.com
Sito web: studioaire.it – P.IVA 02561480340

1	78	485	-94.85	-3477.01	-1953.50	-1618.36	1682.76	486.07	-1573.54	-742.31	-345.16
1010.48											
1	78	486	129.11	-2275.24	-561.77	-1584.35	1088.03	450.57	-1206.83	-376.20	-380.06
828.70											
1	78	487	201.39	-3441.69	-3370.50	130.20	504.27	2076.36	-1341.28	73.32	661.77
1683.30											
1	78	488	-107.27	-4557.05	-4256.71	-407.61	1116.36	2001.98	-847.02	61.85	1093.10
1327.91											
1	78	489	-397.99	-5170.31	-4635.20	-933.11	1505.78	1575.85	-416.11	-48.45	1208.18
772.78											
1	78	490	-549.94	-5476.52	-4720.12	-1306.34	1776.04	1232.10	-275.36	-194.66	1151.39
339.33											
1	78	491	-620.24	-5564.71	-4601.96	-1582.99	1957.91	1009.95	-349.16	-333.90	994.69
143.22											
1	78	492	-625.21	-5457.11	-4322.46	-1759.86	2048.20	1002.98	-668.66	-443.63	777.94
570.56											
1	78	493	-553.41	-5095.29	-3861.82	-1786.89	2020.11	1027.06	-1054.87	-521.53	493.72
908.80											
1	78	494	-522.49	-4494.23	-3217.25	-1799.47	1855.04	1007.90	-1379.84	-547.49	175.55
1137.82											
1	78	495	-518.74	-3679.26	-2321.02	-1876.97	1564.59	929.39	-1588.10	-525.00	-133.70
1243.45											
1	78	496	-329.65	-2870.54	-1145.79	-2054.40	1186.44	759.60	-1664.93	-468.06	-437.27
1212.17											
1	78	497	482.84	-2578.16	271.13	-2366.45	776.68	471.71	-1586.01	-390.08	-724.23
1015.21											
1	78	498	-5.31	-3853.92	-3832.80	-26.43	284.33	2305.91	-1040.82	350.83	914.26
1649.48											
1	78	499	-94.52	-4573.61	-4348.17	-319.97	979.26	2556.77	-324.06	596.85	1635.87
1343.47											
1	78	500	-252.26	-4986.54	-4567.43	-671.37	1344.82	2335.83	268.45	683.38	1920.89
828.04											
1	78	501	-438.08	-5137.14	-4549.88	-1025.34	1553.93	2040.20	533.32	654.64	1918.88
409.99											
1	78	502	-560.48	-5066.03	-4343.43	-1283.08	1653.35	1734.84	546.05	550.56	1730.33
73.12											
1	78	503	-648.12	-4819.58	-3969.67	-1498.03	1680.19	1638.32	190.77	405.83	1423.26
514.84											
1	78	504	-651.17	-4347.96	-3405.44	-1593.69	1611.20	1560.41	-358.56	207.72	994.13
875.22											
1	78	505	-700.49	-3736.95	-2657.11	-1780.32	1453.56	1420.34	-886.67	33.90	499.77
1129.74											
1	78	506	-625.96	-3107.99	-1683.18	-2050.76	1227.33	1204.08	-1318.12	-114.49	0.44
1259.79											
1	78	507	-81.78	-2822.82	-481.69	-2422.91	967.59	867.79	-1641.96	-250.91	-523.27
1247.46											
1	78	508	1041.05	-3050.94	910.18	-2920.07	720.00	411.71	-1840.14	-359.38	-1069.05
1068.55											
1	78	509	-274.08	-4416.19	-4415.77	-274.49	-41.30	2319.29	-735.88	496.70	1086.72
1498.83											
1	78	510	-319.66	-4597.02	-4483.54	-433.14	687.40	2863.07	104.49	898.06	2069.50
1248.75											
1	78	511	-385.97	-4761.72	-4480.12	-667.58	1073.74	2885.84	747.26	1114.11	2518.99
806.21											
1	78	512	-510.04	-4760.59	-4335.59	-935.03	1275.08	2705.66	1056.31	1176.16	2585.80
428.15											
1	78	513	-620.56	-4577.76	-4038.52	-1159.80	1357.61	2386.87	1114.90	1115.14	2386.63
17.34											
1	78	514	-735.79	-4240.30	-3586.53	-1389.56	1365.19	2168.38	806.64	964.53	2010.49
435.97											
1	78	515	-792.51	-3738.83	-2951.98	-1579.35	1303.53	1951.17	199.05	692.98	1457.24
788.33											
1	78	516	-813.41	-3205.03	-2144.97	-1873.46	1188.08	1680.94	-440.38	433.53	807.03
1044.09											
1	78	517	-511.89	-2870.27	-1139.58	-2242.57	1042.28	1341.47	-1025.84	180.84	134.79
1183.43											
1	78	518	320.13	-2975.68	55.90	-2711.45	895.01	877.76	-1552.66	-84.05	-590.85
1188.49											
1	78	519	1534.21	-3400.80	1408.27	-3274.85	778.26	317.63	-2012.11	-327.33	-1367.15
1042.40											
1	78	520	-389.16	-4979.03	-4952.02	-416.18	-351.11	2216.85	-439.78	571.55	1205.52
1289.94											
1	78	521	581.12	429.90	561.59	449.44	50.72	274.68	14.16	256.53	32.31
66.32											
1	78	522	-558.21	-4673.45	-4645.51	-586.16	337.94	3019.58	457.82	1067.40	2410.00
1090.88											
1	78	523	-680.07	-4552.44	-4408.04	-824.47	733.70	3284.77	1089.67	1367.32	3007.12
729.65											
1	78	524	-729.97	-4387.86	-4121.80	-996.02	949.95	3237.41	1401.88	1494.15	3145.14
401.07											
1	78	525	-818.01	-4109.71	-3732.83	-1194.88	1048.11	2949.66	1471.07	1471.20	2949.52
14.25											
1	78	526	-921.17	-3718.46	-3215.12	-1424.51	1074.54	2621.94	1228.98	1327.68	2523.24
357.41											
1	78	527	-964.71	-3237.22	-2534.90	-1667.03	1050.13	2251.31	677.35	1060.31	1868.35
675.36											
1	78	528	-846.20	-2860.32	-1699.19	-2007.32	995.21	1827.17	-37.34	703.90	1085.93
912.48											
1	78	529	-281.13	-2823.28	-689.25	-2415.16	933.25	1376.84	-724.03	388.98	263.83
1048.57											
1	78	530	702.16	-3141.87	485.53	-2925.25	886.44	819.28	-1419.14	37.39	-637.25
1067.17											
1	78	531	1938.95	-3653.16	1798.36	-3512.56	875.49	200.65	-2114.57	-304.88	-1609.03
956.48											
1	78	532	-440.28	-5446.27	-5370.01	-516.53	-613.13	2058.30	-158.31	610.39	1289.60
1055.00											
1	78	533	-725.50	-4788.34	-4788.33	-725.52	-7.48	3059.02	779.42	1164.41	2674.03
854.04											

Viale Duca Alessandro n. 11 – 43123 Parma
Cell. 335 1403156 – E mail ing.concari@gmail.com
Sito web: studioaire.it – P.IVA 02561480340

1	78	534	-922.27	-4388.74	-4348.60	-962.41	370.86	3582.18	1332.35	1518.45	3396.08	-619.73
1	78	535	-999.23	-4051.06	-3927.81	-1122.48	600.79	3659.91	1629.96	1690.15	3599.72	-344.32
1	78	536	-1086.27	-3675.80	-3452.53	-1309.54	726.85	3415.17	1696.92	1697.27	3414.81	-24.65
1	78	537	-1169.70	-3246.13	-2880.43	-1535.39	790.96	3010.06	1507.94	1564.71	2953.29	286.46
1	78	538	-1147.96	-2826.60	-2171.62	-1802.94	818.82	2477.34	1021.80	1280.72	2218.42	556.62
1	78	539	-809.56	-2666.24	-1325.92	-2149.89	831.91	1901.16	315.22	888.00	1328.38	761.78
1	78	540	-41.05	-2873.06	-325.83	-2588.28	851.70	1345.90	-428.50	535.50	381.90	883.87
1	78	541	1017.91	-3279.32	822.98	-3084.39	894.26	720.56	-1261.02	124.63	-665.09	908.71
1	78	542	2259.55	-3821.03	2103.15	-3664.63	962.55	76.28	-2162.89	-290.22	-1796.40	828.44
1	78	543	-441.82	-5790.56	-5645.18	-587.20	-869.76	1878.64	104.86	632.39	1351.12	-810.82
1	78	544	-806.01	-4911.51	-4878.31	-839.21	-367.71	3102.57	996.81	1223.89	2875.49	-653.16
1	78	545	-1096.85	-4285.41	-4285.33	-1096.93	16.22	3805.53	1505.27	1613.70	3697.10	-487.51
1	78	546	-1241.49	-3778.31	-3753.78	-1266.03	248.26	3988.65	1783.58	1816.53	3955.70	-267.53
1	78	547	-1366.55	-3293.61	-3206.37	-1453.79	400.63	3783.33	1846.26	1846.43	3783.16	-18.12
1	78	548	-1452.31	-2817.85	-2592.71	-1677.45	506.70	3328.97	1692.98	1724.75	3297.19	225.78
1	78	549	-1317.81	-2502.26	-1868.43	-1951.64	590.76	2665.09	1318.41	1481.45	2502.05	439.30
1	78	550	-736.99	-2595.06	-1024.98	-2307.07	672.43	1928.27	618.66	1018.64	1528.29	603.19
1	78	551	162.71	-2930.35	-42.56	-2725.09	769.91	1269.83	-144.80	641.82	483.21	702.86
1	78	552	1258.65	-3384.19	1079.50	-3205.04	894.25	601.81	-1092.04	189.35	-679.57	727.00
1	78	553	2507.21	-3938.95	2333.64	-3765.38	1043.42	-42.02	-2173.54	-279.23	-1936.32	670.34
1	78	554	-437.92	-5999.69	-5800.82	-636.79	-1032.73	1692.00	353.08	647.72	1397.36	-554.70
1	78	555	-820.41	-5023.89	-4916.38	-927.92	-663.59	3134.86	1154.85	1265.60	3024.11	-454.98
1	78	556	-1176.96	-4253.81	-4215.48	-1215.30	-341.30	3968.59	1630.63	1680.40	3918.83	-337.45
1	78	557	-1401.04	-3604.49	-3601.00	-1404.53	-87.65	4231.70	1892.15	1905.48	4218.36	-176.15
1	78	558	-1597.04	-3004.57	-3000.01	-1601.60	80.01	4055.74	1952.52	1952.53	4055.74	1.81
1	78	559	-1745.45	-2440.18	-2359.80	-1825.83	222.22	3570.31	1822.64	1840.30	3552.64	174.81
1	78	560	-1437.93	-2292.28	-1633.08	-2097.13	358.67	2802.73	1508.22	1596.20	2714.75	325.81
1	78	561	-660.30	-2587.05	-803.61	-2443.74	505.56	1922.39	875.76	1118.17	1679.98	441.53
1	78	562	299.10	-2990.03	152.69	-2843.62	678.32	1161.06	124.46	723.87	561.65	511.92
1	78	563	1404.86	-3461.27	1243.49	-3299.90	871.33	480.50	-926.74	240.86	-687.10	528.96
1	78	564	2653.70	-4019.81	2469.78	-3835.89	1092.49	-142.21	-2163.52	-268.43	-2037.29	489.09
1	78	565	-417.60	-6073.84	-5819.60	-671.84	-1171.92	1535.61	558.64	662.14	1432.10	-300.69
1	78	566	-801.02	-5070.29	-4875.68	-995.63	-890.49	3172.49	1267.67	1302.06	3138.11	-253.60
1	78	567	-1176.11	-4250.99	-4110.41	-1316.70	-642.28	4098.38	1724.19	1736.82	4085.75	-172.72
1	78	568	-1438.96	-3537.86	-3444.60	-1532.21	-432.47	4426.46	1977.21	1979.40	4424.27	-73.19
1	78	569	-1688.00	-2869.07	-2813.16	-1743.91	-250.81	4270.89	2039.62	2040.09	4270.42	32.46
1	78	570	-1944.22	-2190.71	-2164.00	-1970.93	-76.62	3765.82	1926.35	1935.87	3756.30	131.99
1	78	571	-1433.39	-2250.52	-1447.64	-2236.27	106.99	2927.76	1654.34	1692.14	2889.96	216.13
1	78	572	-591.38	-2600.23	-641.39	-2550.22	312.99	1911.56	1094.97	1204.41	1802.13	278.18
1	78	573	375.58	-3039.86	283.99	-2948.27	551.75	1037.22	389.02	795.33	630.91	313.50
1	78	574	1482.56	-3517.79	1342.60	-3377.84	824.77	382.04	-782.04	287.51	-687.52	317.96
1	78	575	2733.37	-4080.86	2541.61	-3889.10	1126.90	-210.94	-2150.09	-254.86	-2106.17	288.52
1	78	576	-382.03	-6005.24	-5692.64	-694.63	-1288.44	1460.68	674.26	677.21	1457.73	-48.07
1	78	577	-748.81	-5044.15	-4741.64	-1051.32	-1099.04	3195.69	1334.51	1335.01	3195.18	-30.65
1	78	578	-1116.97	-4245.72	-3953.42	-1409.26	-910.54	4164.03	1784.89	1784.89	4164.02	3.79
1	78	579	-1372.73	-3550.97	-3268.70	-1655.01	-731.56	4502.69	2039.77	2040.41	4502.05	39.87
1	78	580	-1589.46	-2926.89	-2632.15	-1884.20	-554.36	4347.10	2109.16	2111.48	4344.78	72.10
1	78	581	-1669.93	-2439.15	-1994.13	-2114.95	-379.83	3825.15	2008.89	2013.96	3820.07	95.87
1	78	582	-1279.32	-2396.22	-1303.24	-2372.29	-161.70	2949.85	1761.44	1771.59	2939.70	109.37
1	78	583	-525.53	-2653.99	-531.25	-2648.27	110.25	1864.07	1256.74	1278.61	1842.21	113.14

Viale Duca Alessandro n. 11 – 43123 Parma
Cell. 335 1403156 – E mail ing.concari@gmail.com
Sito web: studioaire.it – P.IVA 02561480340

1	78	584	406.75	-3094.70	357.68	-3045.64	411.56	904.06	599.17	857.61	645.62	109.56
1	78	585	1500.81	-3562.57	1385.02	-3446.78	756.90	339.55	-702.78	330.26	-693.49	97.96
1	78	586	2755.99	-4124.55	2563.15	-3931.70	1135.65	-235.34	-2150.89	-237.90	-2148.33	70.04
1	78	587	-338.20	-5836.89	-5464.72	-710.37	-1381.28	1533.18	635.47	693.42	1475.23	220.60
1	78	588	-683.97	-4955.37	-4536.85	-1102.49	-1269.85	3236.31	1341.89	1364.19	3214.01	204.32
1	78	589	-1018.31	-4236.82	-3751.45	-1503.68	-1151.77	4193.23	1808.04	1823.32	4177.96	190.28
1	78	590	-1218.06	-3637.18	-3072.22	-1783.03	-1023.49	4518.06	2075.70	2086.49	4507.27	162.00
1	78	591	-1351.40	-3133.36	-2453.69	-2031.08	-865.56	4345.70	2157.98	2164.56	4339.12	119.81
1	78	592	-1354.03	-2759.58	-1847.88	-2265.73	-671.00	3807.41	2070.35	2072.84	3804.92	65.72
1	78	593	-1073.76	-2638.66	-1200.82	-2511.61	-427.42	2921.88	1833.40	1833.43	2921.85	5.54
1	78	594	-472.84	-2776.60	-479.84	-2769.60	-126.75	1828.17	1335.11	1340.24	1823.04	-50.06
1	78	595	374.03	-3126.74	358.36	-3111.07	233.68	940.04	596.64	910.98	625.69	-95.57
1	78	596	1431.26	-3598.65	1344.18	-3511.57	656.07	389.32	-731.09	369.41	-711.19	-148.02
1	78	597	2687.05	-4156.77	2498.13	-3967.85	1121.26	-204.92	-2181.85	-218.59	-2168.18	-163.82
1	78	598	-301.36	-5588.84	-5159.86	-730.33	-1443.66	1729.50	463.76	710.92	1482.35	501.75
1	78	599	-621.57	-4805.55	-4260.47	-1166.65	-1408.37	3294.31	1281.38	1386.83	3188.86	448.50
1	78	600	-905.59	-4204.43	-3491.30	-1618.72	-1357.91	4186.05	1783.21	1846.18	4123.08	383.86
1	78	601	-1030.68	-3740.95	-2838.88	-1932.76	-1277.16	4463.04	2073.63	2109.71	4426.97	291.37
1	78	602	-1074.33	-3386.71	-2261.84	-2199.19	-1155.76	4253.09	2176.31	2191.19	4238.21	175.16
1	78	603	-1036.66	-3111.22	-1710.00	-2437.87	-971.34	3694.38	2104.02	2105.14	3693.26	42.20
1	78	604	-844.40	-2946.38	-1126.23	-2664.55	-716.22	2825.80	1862.95	1871.81	2816.94	-91.93
1	78	605	-416.54	-2966.65	-475.34	-2907.85	-382.72	1825.19	1295.45	1386.11	1734.53	-199.52
1	78	606	294.16	-3216.33	293.84	-3216.01	33.48	1150.69	365.34	954.63	561.39	-339.90
1	78	607	1277.84	-3636.81	1222.23	-3581.20	519.82	532.34	-866.96	406.07	-740.69	-400.92
1	78	608	2517.42	-4178.18	2342.43	-4003.18	1068.22	-111.22	-2248.15	-194.95	-2164.42	-414.63
1	78	609	-296.53	-5274.03	-4800.57	-769.98	-1460.29	1978.29	224.53	728.67	1474.15	793.72
1	78	610	-599.77	-4570.82	-3906.06	-1264.53	-1482.53	3358.10	1146.61	1392.55	3112.16	695.28
1	78	611	-797.72	-4134.43	-3159.05	-1773.10	-1517.62	4139.04	1689.81	1834.29	3994.57	577.05
1	78	612	-810.75	-3863.47	-2555.92	-2118.30	-1510.59	4337.84	2005.24	2085.08	4258.00	424.10
1	78	613	-776.99	-3670.07	-2045.06	-2402.00	-1435.48	4066.45	2135.18	2165.07	4036.56	238.40
1	78	614	-726.05	-3489.65	-1567.53	-2648.18	-1271.78	3477.02	2085.35	2085.90	3476.47	27.59
1	78	615	-605.72	-3326.80	-1065.22	-2867.30	-1019.41	2653.74	1823.49	1863.04	2614.18	-176.84
1	78	616	-343.22	-3259.91	-505.52	-3097.60	-668.61	1870.83	1093.03	1398.77	1565.09	-379.91
1	78	617	183.16	-3361.19	170.74	-3348.78	-209.43	1338.34	80.87	978.07	441.14	-568.53
1	78	618	1044.72	-3694.43	1018.48	-3668.19	351.63	731.12	-1082.37	438.67	-789.93	-666.95
1	78	619	2243.82	-4202.27	2085.62	-4044.08	997.35	48.77	-2348.17	-164.47	-2134.92	-682.39
1	78	620	-358.44	-4884.88	-4393.32	-850.00	-1408.32	2153.75	30.17	745.60	1438.32	1003.71
1	78	621	-620.43	-4255.24	-3457.27	-1418.41	-1504.56	3393.82	941.59	1364.34	2971.07	926.27
1	78	622	-633.93	-4029.75	-2741.07	-1922.61	-1647.85	4037.52	1504.83	1752.78	3789.57	752.66
1	78	623	-556.75	-4005.15	-2215.59	-2346.30	-1722.96	4145.02	1830.48	1971.86	4003.64	554.29
1	78	624	-472.35	-3975.11	-1797.64	-2649.81	-1698.76	3787.05	1991.24	2046.92	3731.36	311.30
1	78	625	-429.22	-3894.73	-1408.43	-2915.52	-1560.32	3017.61	1976.29	1976.92	3016.98	25.56
1	78	626	-359.52	-3765.20	-997.66	-3127.06	-1328.94	2284.22	1593.38	1699.16	2178.45	-248.77
1	78	627	-237.47	-3650.74	-550.77	-3337.44	-985.51	1894.95	757.40	1346.13	1306.22	-568.43
1	78	628	70.87	-3627.58	0.92	-3557.62	-503.82	1466.02	-254.12	961.43	250.46	-783.17
1	78	629	738.63	-3797.26	735.55	-3794.19	118.04	947.54	-1353.73	468.29	-874.48	-934.45
1	78	630	1838.09	-4254.41	1712.92	-4129.23	864.27	279.96	-2472.23	-115.32	-2076.95	-965.22
1	78	631	-453.28	-4381.26	-3907.81	-926.73	-1278.89	2287.47	-186.49	756.47	1344.51	1201.53
1	78	632	-603.09	-3879.06	-2900.19	-1581.96	-1499.52	3300.76	714.01	1272.36	2742.41	1064.22
1	78	633	-403.07	-3909.57	-2230.00	-2082.64	-1751.70	3852.71	1206.42	1542.10	3517.03	

Viale Duca Alessandro n. 11 – 43123 Parma
Cell. 335 1403156 – E mail ing.concari@gmail.com
Sito web: studioaire.it – P.IVA 02561480340

880.70												
1	78	634	-214.14	-4092.25	-1817.36	-2489.03	-1909.75	3893.07	1489.48	1700.25	3682.30	
679.85												
1	78	635	-165.24	-4234.25	-1525.03	-2874.46	-1919.37	3423.68	1687.23	1789.01	3321.90	
407.89												
1	78	636	-144.94	-4261.72	-1223.66	-3183.00	-1810.31	2585.31	1721.95	1723.75	2583.52	
39.28												
1	78	637	-120.01	-4300.60	-891.12	-3529.49	-1621.44	2003.86	1264.70	1480.00	1788.56	-
335.84												
1	78	638	-90.17	-4223.08	-576.14	-3737.10	-1331.29	1736.31	380.07	1153.15	963.23	-
671.44												
1	78	639	-3.82	-4080.49	-195.15	-3889.16	-862.20	1467.31	-621.07	870.97	-24.72	-
943.27												
1	78	640	400.75	-4042.26	391.02	-4032.54	-207.67	1138.49	-1680.18	493.25	-1034.94	-
1184.22												
1	78	641	1286.11	-4298.19	1215.16	-4227.24	625.44	604.90	-2622.96	-23.14	-1994.92	-
1277.81												
1	78	642	-643.30	-3754.03	-3318.80	-1078.53	-1079.10	2373.49	-517.99	733.95	1121.55	
1432.69												
1	78	643	-494.72	-3496.81	-2249.29	-1742.24	-1479.48	2973.59	413.04	1003.51	2383.13	
1078.55												
1	78	644	-120.89	-3798.03	-1646.13	-2272.79	-1811.68	3564.38	800.88	1139.80	3225.46	
906.50												
1	78	645	74.44	-4197.36	-1361.60	-2761.32	-2017.98	3619.87	923.28	1184.95	3358.20	
798.22												
1	78	646	102.48	-4487.28	-1227.61	-3157.19	-2082.23	2973.52	1084.65	1265.72	2792.45	
556.09												
1	78	647	43.88	-4673.04	-1020.96	-3608.20	-1972.03	1957.38	1325.16	1327.64	1954.90	
39.55												
1	78	648	123.39	-4870.69	-706.24	-4041.06	-1858.75	1658.96	574.45	957.45	1275.96	-
518.34												
1	78	649	115.38	-4950.19	-512.80	-4322.02	-1669.58	1377.94	-28.93	729.05	619.95	-
701.32												
1	78	650	3.01	-4833.67	-378.39	-4452.27	-1303.55	1118.61	-909.72	609.80	-400.91	-
879.29												
1	78	651	136.87	-4523.94	38.74	-4425.81	-669.13	1214.92	-2069.70	523.27	-1378.05	-
1339.19												
1	78	652	642.64	-4345.11	638.80	-4341.27	138.32	973.18	-2810.27	91.01	-1928.09	-
1599.83												
1	78	653	-518.29	-2993.34	-2511.79	-999.84	-979.78	2096.54	-1019.11	446.88	630.55	
1555.11												
1	78	654	132.72	-3237.67	-1709.33	-1395.62	-1677.88	2340.76	87.05	593.86	1833.95	
940.92												
1	78	655	-21.06	-3377.63	-1136.42	-2262.27	-1581.06	3270.13	247.91	490.26	3027.78	
820.79												
1	78	656	265.78	-4067.41	-813.62	-2988.01	-1874.07	3386.40	232.21	474.49	3144.11	
839.95												
1	78	657	362.14	-4887.45	-781.85	-3743.47	-2167.20	2452.53	-24.15	277.91	2150.46	
810.48												
1	78	658	211.70	-4997.10	-748.25	-4037.14	-2019.58	855.62	449.27	469.19	835.70	
87.73												
1	78	659	366.12	-5501.38	-563.29	-4571.97	-2142.32	1228.20	-371.51	171.00	685.70	-
757.32												
1	78	660	101.06	-5738.46	-422.93	-5214.46	-1668.92	973.00	-359.02	132.72	481.26	-
642.81												
1	78	661	337.21	-6283.26	-173.93	-5772.12	-1767.12	348.83	-1218.97	-27.81	-842.33	-
669.81												
1	78	662	226.15	-5390.86	-170.33	-4994.39	-1438.68	741.29	-2753.04	179.59	-2191.34	-
1283.45												
1	78	663	328.63	-4805.95	89.40	-4566.72	-1082.17	1217.30	-3121.83	41.45	-1945.97	-
1928.61												
1	78	664	455.15	-586.67	-365.01	233.50	426.38	518.29	-203.41	-129.50	444.38	
218.81												
1	78	665	1665.70	240.35	1019.27	886.78	709.59	234.06	-520.74	-512.22	225.54	
79.75												
1	78	666	994.11	-1006.92	-526.73	513.91	854.57	1558.65	199.58	339.18	1419.05	
412.61												
1	78	667	-293.30	-1141.44	-423.11	-1011.63	-305.37	2852.48	-74.93	-28.16	2805.72	
367.04												
1	78	668	-194.45	-2714.99	-204.71	-2704.72	-160.50	2896.93	-111.73	-61.00	2846.21	
387.35												
1	78	669	43.10	-4135.98	42.50	-4135.39	49.80	1428.72	-246.40	-242.97	1425.28	
75.77												
1	78	670	-51.44	-5308.28	-68.49	-5291.23	-298.92	52.22	-417.44	-2.84	-362.39	
151.08												
1	78	671	-324.15	-6716.52	-354.99	-6685.69	442.92	297.58	-117.42	154.43	25.73	
197.27												
1	78	672	-421.75	-7509.27	-425.05	-7505.98	-152.73	389.33	-189.17	-4.57	204.73	-
269.66												
1	78	673	174.89	-7745.75	155.22	-7726.08	394.22	-49.99	-1603.86	-218.23	-1435.63	-
482.81												
1	78	674	-227.39	-5308.80	-234.07	-5302.13	184.07	99.68	-3070.92	23.51	-2994.75	-
485.50												
1	78	675	204.50	-4637.66	27.96	-4461.13	907.56	1.04	-1601.41	-17.30	-1583.06	-
170.46												
1	78	676	-215.49	-1779.07	-428.87	-1565.69	536.75	557.54	-270.75	20.16	266.63	-
395.38												
1	78	677	-48.48	-930.87	-92.15	-887.19	-191.40	258.69	-114.66	-77.12	221.15	-
112.28												
1	78	678	1374.34	240.89	1239.06	376.17	-367.47	-14.39	-218.58	-196.88	-36.08	-
62.92												
1	78	679	187.58	-1690.94	119.76	-1623.12	-350.44	202.08	-113.85	-81.08	169.32	-
96.32												
1	78	680	241.40	-2038.31	199.69	-1996.61	-305.52	51.92	-85.40	-71.58	38.10	-
41.32												
1	78	681	237.12	-2315.27	208.14	-2286.29	-270.43	-18.59	-65.76	-47.17	-37.18	
23.05												
1	78	682	221.18	-2496.45	199.13	-2474.40	-243.82	93.97	-162.86	-13.86	-55.02	

Viale Duca Alessandro n. 11 – 43123 Parma
Cell. 335 1403156 – E mail ing.concari@gmail.com
Sito web: studioaire.it – P.IVA 02561480340

126.75												
1	78	683	201.07	-2532.66	181.16	-2512.75	-232.46	208.10	-227.40	20.70	-40.00	
215.62												
1	78	684	181.15	-2717.02	164.86	-2700.73	-216.68	309.51	-235.11	75.78	-1.38	
269.56												
1	78	685	168.76	-2797.51	153.88	-2782.64	-209.53	346.80	-218.16	91.52	37.12	
281.16												
1	78	686	150.65	-2397.49	132.07	-2378.91	-216.80	337.04	-169.13	105.23	62.68	
252.19												
1	78	687	167.70	-1668.03	129.39	-1629.71	-262.43	293.39	-84.35	107.89	101.15	
188.84												
1	78	688	338.86	-693.04	146.44	-500.62	-401.91	284.07	57.62	108.77	232.92	
94.69												
1	78	689	430.64	-52.10	340.57	37.98	-188.07	291.19	11.53	41.16	261.56	
86.07												
1	78	690	-763.65	-1517.41	-1293.68	-987.38	344.36	328.71	-269.58	61.94	-2.81	-
297.39												
1	78	691	1153.33	-520.18	-304.69	937.83	560.53	522.04	168.89	334.84	356.09	
176.25												
1	78	692	-263.02	-1305.73	-1245.46	-323.30	-243.34	677.84	7.66	529.05	156.45	
278.52												
1	78	693	1180.95	-2119.31	-2006.56	1068.20	599.49	1875.37	218.26	1396.62	697.02	-
751.09												
1	94	17	757.60	-1224.00	674.92	-1141.32	396.24	646.54	-769.00	-9.09	-113.36	
705.85												
1	94	25	1060.44	-1414.62	1059.47	-1413.65	-48.97	537.60	-1337.30	-167.52	-632.18	
908.20												
1	94	33	1286.53	-1655.83	1278.22	-1647.52	-156.12	410.71	-1716.72	-253.19	-1052.82	
985.71												
1	94	41	1364.47	-1817.31	1360.23	-1813.08	-115.99	259.41	-1966.67	-314.58	-1392.68	
973.80												
1	94	49	1389.88	-1916.07	1389.65	-1915.84	-27.65	93.49	-2114.24	-364.41	-1656.33	
895.13												
1	94	57	1409.24	-1979.02	1407.77	-1977.54	70.76	-74.07	-2182.94	-404.14	-1852.86	
766.25												
1	94	65	1436.69	-2022.96	1428.77	-2015.03	165.43	-229.58	-2198.80	-433.98	-1994.40	
600.61												
1	94	73	1473.29	-2056.96	1455.26	-2038.93	251.68	-358.42	-2188.76	-454.76	-2092.42	
408.72												
1	94	81	1515.81	-2085.69	1485.69	-2055.57	328.02	-444.66	-2178.57	-467.61	-2155.61	
198.17												
1	94	89	1559.40	-2111.54	1516.73	-2068.87	393.46	-473.18	-2189.53	-473.57	-2189.14	-
25.82												
1	94	97	1596.22	-2135.50	1542.13	-2081.40	446.01	-434.79	-2232.75	-473.07	-2194.47	-
259.52												
1	94	105	1611.36	-2157.01	1548.93	-2094.58	480.98	-329.60	-2305.07	-465.29	-2169.38	-
499.64												
1	94	113	1576.19	-2172.53	1511.48	-2107.83	488.24	-162.98	-2390.14	-446.18	-2106.95	-
741.97												
1	94	121	1438.07	-2172.23	1381.93	-2116.09	446.69	63.53	-2457.10	-402.90	-1990.67	-
978.85												
1	94	129	1109.43	-2134.41	1078.96	-2103.94	312.92	362.45	-2441.02	-301.81	-1776.76	-
1192.05												
1	94	137	487.44	-2022.77	487.43	-2022.76	4.77	766.47	-2183.64	-72.95	-1344.22	-
1331.07												
1	94	145	-390.00	-1822.44	-652.84	-1559.59	-554.45	1286.78	-1297.80	380.36	-391.38	-
1233.33												
1	94	165	824.30	-811.33	258.20	-245.23	778.11	456.72	-930.27	-210.17	-263.39	-
692.99												
1	94	173	472.60	-366.52	256.41	-150.33	366.98	457.10	-1002.37	-124.78	-420.50	-
714.60												
1	94	181	-328.15	-494.50	-493.70	-328.95	11.53	360.50	-1119.77	-82.37	-676.90	-
677.81												
1	94	189	-400.38	-1292.91	-1211.08	-482.21	-257.56	232.08	-1242.06	-81.35	-928.63	-
603.16												
1	94	197	-418.02	-1921.37	-1756.70	-582.69	-469.51	107.89	-1351.31	-99.78	-1143.64	-
509.81												
1	94	205	-405.35	-2366.00	-2126.54	-644.81	-641.99	3.26	-1441.10	-123.34	-1314.51	-
408.44												
1	94	213	-370.77	-2653.03	-2340.98	-682.81	-784.09	-76.92	-1510.63	-144.78	-1442.77	-
304.45												
1	94	221	-318.27	-2807.03	-2419.50	-705.80	-902.38	-132.23	-1560.90	-160.80	-1532.33	-
200.00												
1	94	229	-245.62	-2850.85	-2377.61	-718.85	-1004.46	-163.61	-1593.16	-169.99	-1586.79	-
95.23												
1	94	237	-144.68	-2811.95	-2231.91	-724.72	-1100.31	-171.64	-1608.68	-171.73	-1608.59	
10.84												
1	94	245	-5.21	-2729.00	-2008.80	-725.41	-1201.24	-155.44	-1608.82	-165.38	-1598.88	
119.78												
1	94	253	174.49	-2651.62	-1753.53	-723.60	-1315.87	-111.89	-1595.22	-149.49	-1557.62	
233.15												
1	94	261	368.54	-2630.91	-1537.62	-724.75	-1443.60	-35.09	-1569.49	-120.75	-1483.83	
352.28												
1	94	269	504.07	-2710.14	-1465.07	-741.00	-1565.80	84.33	-1532.08	-72.40	-1375.35	
478.30												
1	94	277	455.61	-2929.91	-1677.08	-797.22	-1634.60	258.86	-1479.43	6.51	-1227.07	
612.36												
1	94	285	68.50	-3366.54	-2359.73	-938.31	-1563.57	493.15	-1398.73	119.07	-1024.64	
753.51												
1	94	293	-737.82	-4434.40	-3983.65	-1188.57	-1209.57	723.16	-1253.72	193.90	-724.46	
875.31												
1	94	307	-603.35	-2028.54	-675.30	-1956.59	312.04	701.09	-1103.47	-473.02	70.64	-
860.36												
1	94	315	-1572.14	-2875.12	-1604.55	-2842.72	202.92	341.38	-1779.47	-1412.04	-26.04	-
802.65												
1	94	323	-1970.30	-3678.08	-1987.78	-3660.61	171.85	28.95	-2133.83	-1934.31	-170.57	-
625.87												
1	94	331	-2132.17	-4227.78	-2159.20	-4200.75	236.46	-195.83	-2258.05	-2195.72	-258.17	-

Viale Duca Alessandro n. 11 – 43123 Parma
Cell. 335 1403156 – E mail ing.concari@gmail.com
Sito web: studioaire.it – P.IVA 02561480340

1	94	339	-2173.01	-4527.52	-2221.51	-4479.03	334.40	-295.65	-2274.07	-2273.22	-296.50
1	94	347	-2139.80	-4579.29	-2215.77	-4503.32	423.73	-264.87	-2243.57	-2207.61	-300.83
1	94	355	-2053.06	-4368.63	-2152.42	-4269.27	469.26	-135.17	-2166.19	-2019.67	-281.69
1	94	363	-1913.75	-3870.96	-2016.51	-3768.19	436.54	42.58	-2009.51	-1720.74	-246.18
1	94	371	-1700.90	-3071.87	-1767.33	-3005.44	294.38	223.83	-1741.44	-1319.87	-197.75
1	94	379	-1343.07	-2045.19	-1345.43	-2042.82	40.66	385.26	-1338.00	-826.11	-126.62
1	94	387	-640.94	-1157.15	-716.18	-1081.91	-182.15	535.11	-749.86	-230.49	15.74
1	94	395	195.65	-1759.04	-1443.60	-119.78	-719.08	696.30	-1706.68	-466.17	-544.21
1	94	403	-430.98	-3284.94	-437.87	-3278.05	-140.06	467.13	-2206.05	-1358.52	-380.40
1	94	407	1514.62	319.45	1506.61	327.46	-97.51	348.29	-111.01	259.53	-22.25
1	94	408	2376.50	211.36	2362.89	224.97	-171.10	300.03	-251.33	56.94	-8.24
1	94	409	2480.89	198.87	2468.72	211.04	-166.22	302.38	-324.08	-20.75	-0.95
1	94	410	2431.15	190.65	2420.04	201.76	-157.35	292.14	-350.71	-65.69	7.13
1	94	411	27.17	-3880.73	-39.91	-3813.65	-507.58	2422.52	-506.81	-193.62	2109.34
1	94	415	2370.11	186.13	2359.56	196.68	-151.41	261.99	-349.73	-101.83	14.09
1	94	416	2332.80	183.77	2322.60	193.98	-147.74	215.56	-328.01	-131.74	19.29
1	94	417	2323.92	182.35	2314.01	192.27	-145.39	158.76	-290.69	-154.85	22.92
1	94	418	2339.46	181.30	2329.84	190.92	-143.77	98.49	-244.54	-171.46	25.40
1	94	419	-146.03	-4362.69	-202.16	-4306.57	-483.21	2772.92	-270.60	-67.07	2569.39
1	94	423	2373.19	180.44	2363.88	189.76	-142.60	46.48	-202.03	-182.70	27.15
1	94	424	2417.26	179.91	2408.23	188.94	-141.81	29.20	-190.62	-189.87	28.45
1	94	425	2459.64	180.03	2450.83	188.84	-141.45	64.94	-229.28	-193.81	29.47
1	94	426	2479.29	181.29	2470.52	190.05	-141.65	130.87	-294.54	-194.04	30.37
1	94	427	40.21	-5184.47	-1.89	-5142.37	-467.11	2201.77	-479.53	-367.31	2089.54
1	94	435	-309.45	-5344.06	-407.37	-5246.14	-695.29	-890.80	-2101.87	-2101.18	-891.49
1	94	443	-720.71	-4505.47	-723.37	-4502.81	-100.24	539.51	-1010.73	-953.90	482.67
1	94	447	2438.91	184.39	2429.86	193.44	-142.55	209.37	-364.19	-186.27	31.45
1	94	448	2275.00	189.96	2264.97	199.98	-144.23	296.59	-418.55	-155.33	33.37
1	94	449	1883.10	195.85	1870.07	208.88	-147.70	397.65	-419.70	-58.63	36.58
1	94	450	1093.47	185.07	1065.32	213.22	-157.41	537.91	-297.69	203.73	36.50
1	94	451	-164.43	-5698.49	-171.11	-5691.81	-192.21	1125.06	-660.31	-260.38	725.12
1	94	455	273.08	-411.28	-380.13	241.93	-142.64	911.76	-96.11	833.28	-17.62
1	94	456	-204.99	-998.73	-934.37	-269.34	-216.66	960.97	-298.71	901.97	-239.72
1	94	457	760.46	-321.67	-281.46	720.24	204.70	107.50	3.79	23.77	87.52
1	94	458	651.30	-268.32	0.57	382.41	-418.30	19.41	-6.28	6.76	6.37
1	94	459	455.04	-6496.44	454.42	-6495.83	-65.57	794.15	-1238.01	-387.90	-55.95
1	94	467	542.08	-8471.53	540.26	-8469.71	-128.35	-854.39	-3837.67	-1799.52	-2892.55
1	94	475	-675.45	-1617.26	-918.91	-1373.79	412.34	688.78	-2097.79	-258.30	-1150.71
1	94	476	-900.46	-2539.78	-2532.90	-907.35	106.01	1626.91	-1780.03	-368.00	214.88
1	94	477	-1682.75	-3673.01	-3629.37	-1726.40	291.48	1227.16	-1687.21	-836.65	376.60
1	94	478	-2357.47	-4439.17	-4353.26	-2443.38	414.09	804.18	-1680.12	-1243.30	367.36
1	94	479	-2823.46	-4881.00	-4706.15	-2998.30	573.74	457.57	-1664.38	-1530.87	324.05
1	94	480	-3028.38	-5137.99	-4820.64	-3345.73	754.17	272.56	-1689.47	-1686.48	269.57
1	94	481	-3005.10	-5239.00	-4765.28	-3478.82	913.14	263.18	-1773.19	-1715.80	205.79
1	94	482	-2824.93	-5136.08	-4553.89	-3407.12	1003.29	374.93	-1871.21	-1627.65	131.37
1	94	483	-2556.00	-4754.70	-4154.09	-3156.61	979.71	536.76	-1922.53	-1430.77	45.00
1	94	484	-2250.11	-4026.94	-3493.80	-2783.24	814.29	693.31	-1884.31	-1136.88	-54.13
1	94	485	-1910.27	-2969.09	-2489.21	-2390.16	527.09	797.64	-1732.66	-770.13	-164.89
1	94	486	-1143.92	-2130.16	-1187.07	-2087.00	201.75	767.07	-1445.03	-392.51	-285.45

Viale Duca Alessandro n. 11 – 43123 Parma
Cell. 335 1403156 – E mail ing.concari@gmail.com
Sito web: studioaire.it – P.IVA 02561480340

1104.75												
1	94	487	-74.63	-2293.25	-2136.06	-231.82	569.24	2165.69	-1629.96	37.20	498.54	-
1883.76												
1	94	488	-735.56	-3513.56	-3387.24	-861.88	578.75	2105.26	-1100.24	53.34	951.68	-
1538.52												
1	94	489	-1308.02	-4233.80	-4106.61	-1435.21	596.62	1825.68	-708.76	-16.25	1133.18	-
1129.40												
1	94	490	-1773.77	-4616.03	-4479.95	-1909.85	606.83	1436.16	-382.56	-116.19	1169.79	-
643.04												
1	94	491	-2106.44	-4748.04	-4595.28	-2259.19	616.59	1131.67	-223.69	-209.48	1117.46	-
138.05												
1	94	492	-2306.02	-4672.14	-4504.63	-2473.53	606.86	1084.85	-363.40	-276.80	998.25	
343.40												
1	94	493	-2399.72	-4386.29	-4220.62	-2565.39	549.25	1210.52	-700.83	-311.07	820.76	
770.11												
1	94	494	-2432.11	-3860.89	-3722.80	-2570.21	422.18	1338.62	-1065.77	-313.72	586.57	
1114.73												
1	94	495	-2447.77	-3071.62	-2972.35	-2547.05	228.20	1377.14	-1380.94	-294.53	290.73	
1347.64												
1	94	496	-1946.05	-2569.25	-1946.23	-2569.08	10.32	1252.64	-1609.47	-273.90	-82.94	
1427.86												
1	94	497	-667.31	-2710.02	-680.19	-2697.13	-161.74	863.13	-1723.92	-279.72	-581.07	
1284.72												
1	94	498	-118.70	-2117.90	-1969.88	-266.72	523.46	2328.41	-1350.15	291.16	687.11	-
1828.59												
1	94	499	-398.88	-3248.80	-3085.43	-562.25	662.50	2590.42	-582.87	575.68	1431.87	-
1527.80												
1	94	500	-797.54	-3910.82	-3768.60	-939.76	650.03	2538.77	-5.21	725.37	1808.19	-
1151.01												
1	94	501	-1189.12	-4249.80	-4131.99	-1306.94	588.82	2253.22	460.01	773.75	1939.48	-
681.29												
1	94	502	-1532.32	-4333.60	-4238.88	-1627.04	506.33	1929.35	722.66	749.39	1902.62	-
177.60												
1	94	503	-1817.19	-4195.35	-4124.38	-1888.16	404.63	1823.10	589.75	674.67	1738.18	
312.29												
1	94	504	-2055.51	-3843.89	-3800.05	-2099.35	276.56	1890.61	138.01	563.46	1465.15	
751.43												
1	94	505	-2273.98	-3274.34	-3259.55	-2288.78	120.74	1911.28	-401.73	421.67	1087.88	
1107.50												
1	94	506	-2449.66	-2541.17	-2492.51	-2498.33	-45.67	1780.41	-935.20	248.60	596.60	
1346.61												
1	94	507	-1481.13	-2797.65	-1506.58	-2772.20	-181.29	1428.47	-1427.00	40.12	-38.64	
1427.19												
1	94	508	-326.96	-3163.79	-345.25	-3145.50	-227.04	796.67	-1882.01	-201.55	-883.79	
1295.17												
1	94	509	-359.60	-2068.79	-2023.00	-405.40	276.01	2274.76	-1038.05	428.48	808.23	-
1645.49												
1	94	510	-433.39	-2957.09	-2839.47	-551.00	531.97	2819.07	-125.25	877.56	1816.26	-
1395.34												
1	94	511	-658.52	-3531.16	-3414.61	-775.07	566.77	3000.24	542.26	1167.54	2374.96	-
1070.49												
1	94	512	-950.79	-3827.21	-3735.96	-1042.04	504.14	2877.62	1047.11	1319.30	2605.43	-
651.28												
1	94	513	-1260.21	-3884.87	-3823.17	-1321.91	397.68	2623.37	1322.72	1351.08	2595.01	-
189.95												
1	94	514	-1568.01	-3727.50	-3693.43	-1602.09	269.12	2457.50	1220.75	1281.20	2397.05	
266.66												
1	94	515	-1874.96	-3366.93	-3355.72	-1886.17	128.83	2401.37	762.93	1124.90	2039.40	
679.73												
1	94	516	-2190.76	-2813.70	-2813.51	-2190.95	-10.92	2275.36	147.91	893.42	1529.84	
1015.02												
1	94	517	-2041.48	-2572.90	-2073.97	-2540.40	-127.32	1971.91	-519.60	595.27	857.04	
1238.86												
1	94	518	-1142.38	-2975.55	-1161.14	-2956.79	-184.49	1435.20	-1208.42	239.87	-13.08	
1315.74												
1	94	519	-122.07	-3457.26	-127.76	-3451.57	-137.65	656.80	-1957.02	-155.16	-1145.05	
1209.57												
1	94	520	-528.68	-2141.55	-2141.44	-528.78	-13.25	2102.82	-720.97	496.74	885.11	-
1398.48												
1	94	521	390.89	-42.43	377.98	-29.51	-73.69	346.86	-140.40	304.98	-98.52	
136.59												
1	94	522	-592.16	-2710.73	-2669.75	-633.14	291.78	2892.86	269.82	1045.99	2116.70	-
1197.28												
1	94	523	-718.28	-3159.44	-3096.92	-780.79	385.61	3297.24	962.58	1424.23	2835.60	-
929.88												
1	94	524	-927.93	-3402.77	-3348.66	-982.04	361.91	3353.59	1450.23	1644.35	3159.47	-
576.02												
1	94	525	-1192.75	-3439.89	-3404.76	-1227.88	278.76	3201.85	1695.23	1716.87	3180.21	-
179.26												
1	94	526	-1495.00	-3279.86	-3263.63	-1511.23	169.44	2994.44	1619.76	1655.45	2958.75	
218.60												
1	94	527	-1829.88	-2932.05	-2929.23	-1832.70	55.68	2786.88	1217.38	1474.67	2529.59	
581.06												
1	94	528	-2191.54	-2417.57	-2409.27	-2199.85	-42.52	2492.64	600.77	1188.92	1904.48	
875.66												
1	94	529	-1708.53	-2634.02	-1719.71	-2622.84	-101.12	2023.75	-136.68	813.11	1073.96	
1072.31												
1	94	530	-888.32	-3111.87	-892.05	-3108.14	-91.03	1342.82	-971.12	365.08	6.62	
1143.00												
1	94	531	19.67	-3651.76	19.58	-3651.68	17.99	486.10	-1969.23	-130.66	-1352.46	
1064.88												
1	94	532	-572.35	-2293.13	-2243.48	-622.00	-288.05	1872.66	-410.02	527.95	934.69	-
1123.08												
1	94	533	-732.06	-2547.34	-2547.14	-732.26	19.03	2882.01	601.26	1136.95	2346.32	-
966.86												
1	94	534	-845.03	-2842.66	-2830.22	-857.48	157.18	3495.25	1272.27	1569.36	3198.17	-
756.41												
1	94	535	-1011.86	-3019.11	-3001.98	-1028.99	184.64	3721.67	1714.59	1833.14	3603.12	-

Viale Duca Alessandro n. 11 – 43123 Parma
Cell. 335 1403156 – E mail ing.concari@gmail.com
Sito web: studioaire.it – P.IVA 02561480340

473.16												
1	94	536	-1242.40	-3032.57	-3020.03	-1254.94	149.32	3667.53	1920.38	1933.62	3654.29	-
151.56												
1	94	537	-1530.37	-2873.93	-2868.41	-1535.89	85.97	3436.25	1861.37	1880.78	3416.84	
173.77												
1	94	538	-1871.74	-2545.81	-2545.16	-1872.38	20.84	3088.75	1529.23	1687.98	2929.99	
471.57												
1	94	539	-2055.55	-2269.01	-2058.09	-2266.46	-23.17	2618.31	962.34	1371.08	2209.57	
714.00												
1	94	540	-1425.26	-2719.98	-1425.69	-2719.56	-23.48	1988.43	210.10	948.66	1249.87	
876.32												
1	94	541	-679.69	-3229.20	-680.39	-3228.50	42.11	1194.61	-726.46	442.95	25.20	
937.55												
1	94	542	137.98	-3790.77	128.58	-3781.37	191.88	310.42	-1937.24	-118.90	-1507.92	
883.54												
1	94	543	-529.09	-2456.76	-2296.17	-689.68	-532.70	1618.81	-109.87	541.29	967.65	-
837.64												
1	94	544	-785.86	-2480.29	-2443.46	-822.69	-247.10	2833.40	868.87	1185.74	2516.54	-
722.56												
1	94	545	-950.61	-2613.35	-2609.37	-954.59	-81.31	3633.77	1489.08	1650.89	3471.95	-
566.44												
1	94	546	-1122.20	-2706.99	-2706.98	-1122.21	-4.98	4002.79	1881.08	1942.02	3941.85	-
354.39												
1	94	547	-1342.26	-2686.95	-2686.78	-1342.43	15.15	4025.34	2054.81	2061.20	4018.95	-
112.00												
1	94	548	-1621.33	-2525.26	-2525.18	-1621.41	8.89	3780.90	2005.58	2015.79	3770.69	
134.24												
1	94	549	-1960.95	-2215.48	-2215.47	-1960.96	1.71	3325.64	1731.96	1817.95	3239.65	
360.06												
1	94	550	-1762.89	-2361.24	-1763.31	-2360.82	15.88	2690.50	1238.75	1483.94	2445.31	
543.90												
1	94	551	-1182.69	-2821.23	-1185.77	-2818.15	70.96	1900.17	520.01	1034.03	1386.15	
667.24												
1	94	552	-500.21	-3337.24	-512.05	-3325.39	182.95	1017.35	-482.37	492.45	42.53	
715.32												
1	94	553	248.03	-3900.01	216.28	-3868.25	361.52	148.22	-1880.19	-112.99	-1618.98	
679.41												
1	94	554	-436.93	-2590.71	-2290.39	-737.24	-746.08	1361.67	176.26	547.78	990.15	-
549.88												
1	94	555	-746.61	-2492.37	-2341.88	-897.09	-489.97	2778.94	1070.82	1213.87	2635.89	-
473.17												
1	94	556	-983.99	-2490.30	-2424.52	-1049.77	-307.83	3731.96	1632.21	1699.04	3665.14	-
368.58												
1	94	557	-1201.01	-2491.29	-2462.72	-1229.57	-189.83	4205.20	1983.95	2007.29	4181.85	-
226.52												
1	94	558	-1441.09	-2423.42	-2409.40	-1455.11	-116.51	4279.88	2136.97	2138.90	4277.95	-
64.25												
1	94	559	-1726.66	-2247.66	-2239.34	-1734.97	-65.29	4027.37	2094.33	2099.54	4022.16	
100.20												
1	94	560	-1941.63	-2073.72	-1943.16	-2072.19	-14.15	3498.72	1861.03	1900.24	3459.51	
250.36												
1	94	561	-1520.23	-2469.73	-1523.61	-2466.35	56.54	2730.33	1439.19	1557.08	2612.45	
371.90												
1	94	562	-980.46	-2927.39	-994.15	-2913.69	162.73	1780.41	793.38	1090.81	1482.97	
452.89												
1	94	563	-346.16	-3438.57	-378.62	-3406.11	315.15	829.51	-246.95	526.38	56.18	
484.17												
1	94	564	352.09	-3992.76	289.58	-3930.25	517.38	15.65	-1818.28	-108.36	-1694.28	
460.48												
1	94	565	-314.81	-2682.34	-2229.00	-768.16	-931.55	1124.74	434.04	553.44	1005.34	-
261.18												
1	94	566	-644.59	-2546.31	-2235.71	-955.18	-702.99	2742.38	1201.20	1233.68	2709.90	-
221.37												
1	94	567	-940.18	-2463.18	-2267.15	-1136.20	-510.02	3797.06	1718.03	1731.43	3783.66	-
166.38												
1	94	568	-1215.72	-2385.47	-2262.85	-1338.33	-358.32	4331.94	2046.69	2050.48	4328.15	-
92.95												
1	94	569	-1494.18	-2267.03	-2184.03	-1577.18	-239.29	4434.84	2190.32	2190.37	4434.79	-
10.60												
1	94	570	-1779.23	-2090.05	-2008.19	-1861.08	-136.90	4175.73	2153.29	2155.79	4173.24	
70.97												
1	94	571	-1722.91	-2196.17	-1725.22	-2193.85	-33.01	3602.90	1944.32	1956.81	3590.42	
143.37												
1	94	572	-1328.59	-2582.53	-1334.93	-2576.19	88.94	2746.17	1573.71	1608.85	2711.02	
199.94												
1	94	573	-819.42	-3032.38	-846.07	-3005.72	241.42	1647.26	1024.60	1132.50	1539.36	
235.68												
1	94	574	-219.07	-3533.40	-276.04	-3476.43	430.78	655.65	-39.80	552.83	63.03	
246.85												
1	94	575	446.84	-4075.14	349.64	-3977.93	655.83	-70.37	-1772.92	-102.23	-1741.06	
230.72												
1	94	576	-173.37	-2734.95	-2122.98	-785.34	-1092.29	1016.36	559.12	561.17	1014.30	
30.59												
1	94	577	-517.46	-2609.28	-2125.54	-1001.20	-881.98	2741.88	1250.29	1251.04	2741.13	
33.39												
1	94	578	-855.07	-2493.03	-2130.99	-1217.11	-679.66	3831.42	1755.55	1756.29	3830.68	
39.35												
1	94	579	-1175.71	-2372.03	-2098.55	-1449.19	-502.38	4384.53	2080.65	2081.53	4383.66	
44.90												
1	94	580	-1476.28	-2232.65	-2001.80	-1707.13	-348.30	4492.40	2225.64	2226.64	4491.39	
47.66												
1	94	581	-1687.55	-2133.58	-1823.72	-1997.41	-205.42	4225.60	2194.88	2195.91	4224.57	
45.70												
1	94	582	-1550.26	-2328.81	-1554.65	-2324.42	-58.31	3632.77	1997.51	1998.42	3631.85	
38.59												
1	94	583	-1183.87	-2698.40	-1191.50	-2690.77	107.20	2740.32	1647.88	1648.58	2739.62	
27.60												
1	94	584	-699.92	-3134.80	-737.67	-3097.05	300.81	1553.75	1165.61	1166.20	1553.16	

Viale Duca Alessandro n. 11 – 43123 Parma
Cell. 335 1403156 – E mail ing.concari@gmail.com
Sito web: studioaire.it – P.IVA 02561480340

15.08												
1	94	585	-122.59	-3621.87	-203.33	-3541.13	525.36	576.18	59.96	576.16	59.98	3.08
1	94	586	526.37	-4149.54	394.07	-4017.23	775.33	-93.09	-1764.14	-93.14	-1764.09	-
8.51												
1	94	587	-26.41	-2758.75	-1991.32	-793.84	-1227.98	1190.87	397.32	571.95	1016.25	
328.76												
1	94	588	-400.32	-2661.28	-2016.63	-1044.96	-1020.76	2785.45	1210.57	1266.88	2729.14	
292.42												
1	94	589	-774.57	-2540.37	-2010.66	-1304.27	-809.17	3836.37	1744.07	1773.97	3806.47	
248.34												
1	94	590	-1120.62	-2411.50	-1958.98	-1573.14	-615.93	4364.28	2085.00	2100.30	4348.97	
186.17												
1	94	591	-1411.87	-2292.57	-1850.41	-1854.04	-440.34	4453.23	2242.14	2247.61	4447.76	
109.81												
1	94	592	-1551.87	-2273.87	-1674.27	-2151.46	-270.91	4175.15	2219.92	2220.21	4174.86	
23.92												
1	94	593	-1413.43	-2478.78	-1421.62	-2470.58	-93.06	3583.92	2023.24	2025.91	3581.25	-
64.50												
1	94	594	-1079.77	-2822.97	-1086.28	-2816.46	106.34	2715.40	1656.97	1677.51	2694.86	-
146.00												
1	94	595	-621.85	-3237.32	-665.59	-3193.58	335.40	1623.69	1090.59	1193.46	1520.82	-
210.37												
1	94	596	-61.88	-3704.85	-161.61	-3605.12	594.44	693.14	-51.21	597.79	44.14	-
248.75												
1	94	597	582.38	-4216.49	417.51	-4051.61	874.09	-41.98	-1803.60	-80.40	-1765.18	-
257.29												
1	94	598	99.80	-2765.37	-1861.58	-803.99	-1331.42	1466.90	126.65	585.62	1007.93	
635.99												
1	94	599	-329.46	-2690.57	-1915.79	-1104.24	-1108.63	2864.27	1083.48	1277.84	2669.92	
555.28												
1	94	600	-736.21	-2580.82	-1898.85	-1418.18	-890.44	3811.85	1673.83	1777.04	3708.63	
458.28												
1	94	601	-1083.42	-2476.46	-1830.40	-1729.47	-694.69	4272.87	2046.54	2096.27	4223.14	
329.00												
1	94	602	-1335.95	-2413.27	-1714.55	-2034.67	-514.33	4317.25	2226.90	2241.74	4302.42	
175.46												
1	94	603	-1422.79	-2460.50	-1545.39	-2337.89	-334.96	4020.86	2217.81	2217.83	4020.84	6.08
1	94	604	-1299.13	-2660.30	-1313.96	-2645.47	-141.30	3452.99	2010.66	2029.86	3433.79	-
165.30												
1	94	605	-1007.52	-2968.05	-1010.81	-2964.76	80.24	2675.13	1584.52	1688.58	2571.07	-
320.41												
1	94	606	-584.46	-3346.59	-626.45	-3304.60	337.97	1778.79	868.41	1210.44	1436.76	-
440.90												
1	94	607	-43.87	-3784.23	-153.58	-3674.51	631.14	907.33	-278.34	616.85	12.14	-
509.93												
1	94	608	602.55	-4274.98	410.82	-4083.25	947.85	82.61	-1889.06	-63.31	-1743.14	-
516.15												
1	94	609	159.27	-2763.03	-1768.61	-835.15	-1384.60	1762.84	-179.33	601.77	981.74	
952.32												
1	94	610	-345.43	-2688.34	-1826.25	-1207.51	-1129.87	2951.88	878.53	1276.13	2554.29	
816.25												
1	94	611	-763.94	-2606.53	-1782.53	-1587.94	-916.14	3751.31	1530.26	1748.68	3532.89	
661.38												
1	94	612	-1071.30	-2567.16	-1695.06	-1943.41	-737.55	4112.42	1939.80	2046.21	4006.00	
468.91												
1	94	613	-1254.58	-2592.32	-1576.63	-2270.27	-571.93	4085.46	2152.82	2184.31	4053.97	
244.67												
1	94	614	-1295.17	-2701.21	-1420.51	-2575.88	-400.65	3757.52	2165.35	2165.37	3757.50	-
5.81												
1	94	615	-1191.12	-2893.30	-1217.03	-2867.39	-208.40	3237.38	1934.14	1988.79	3182.73	-
261.23												
1	94	616	-954.36	-3152.60	-954.56	-3152.41	20.63	2615.01	1409.93	1664.05	2360.90	-
491.59												
1	94	617	-584.74	-3474.75	-615.81	-3443.68	298.04	1923.13	576.12	1206.72	1292.54	-
672.14												
1	94	618	-76.79	-3863.69	-182.51	-3757.97	623.84	1143.10	-553.98	631.02	-41.91	-
778.98												
1	94	619	568.14	-4321.41	360.22	-4113.48	986.63	274.06	-2007.52	-39.34	-1694.12	-
785.38												
1	94	620	82.26	-2750.90	-1748.19	-920.45	-1354.77	2052.12	-511.22	620.25	920.65	
1272.84												
1	94	621	-486.72	-2647.41	-1738.84	-1395.29	-1066.60	3002.87	609.23	1247.93	2364.17	
1058.71												
1	94	622	-853.27	-2633.89	-1638.89	-1848.27	-884.13	3632.03	1302.08	1658.67	3275.45	
838.85												
1	94	623	-1057.40	-2715.52	-1531.53	-2241.39	-749.25	3884.50	1729.00	1909.70	3703.80	
597.37												
1	94	624	-1151.88	-2848.85	-1418.87	-2581.85	-617.89	3762.87	1975.32	2034.48	3703.71	
319.76												
1	94	625	-1154.17	-3013.96	-1282.30	-2885.83	-471.05	3377.01	2025.18	2025.22	3376.97	-
7.47												
1	94	626	-1069.96	-3202.04	-1112.87	-3159.13	-299.40	2933.81	1751.70	1865.51	2820.01	-
348.68												
1	94	627	-900.51	-3405.45	-903.25	-3402.71	-82.80	2508.51	1119.71	1569.54	2058.67	-
649.91												
1	94	628	-613.30	-3644.15	-626.66	-3630.80	200.76	2008.62	229.08	1161.04	1076.67	-
888.77												
1	94	629	-166.72	-3951.62	-249.56	-3868.78	553.79	1367.65	-862.50	637.12	-131.98	-
1046.67												
1	94	630	452.66	-4347.21	248.47	-4143.02	968.70	528.55	-2142.57	-0.41	-1613.61	-
1064.48												
1	94	631	-219.57	-2710.44	-1819.48	-1110.53	-1193.92	2297.94	-873.12	638.26	786.57	
1583.80												
1	94	632	-755.67	-2576.69	-1619.24	-1713.12	-909.29	2940.25	291.57	1167.14	2064.68	
1245.99												
1	94	633	-935.65	-2727.31	-1434.51	-2228.45	-803.08	3405.27	990.08	1456.06	2939.30	
953.04												
1	94	634	-985.60	-2976.49	-1317.30	-2644.79	-741.86	3592.37	1373.26	1623.26	3342.37	

Viale Duca Alessandro n. 11 – 43123 Parma
Cell. 335 1403156 – E mail ing.concari@gmail.com
Sito web: studioaire.it – P.IVA 02561480340

701.63												
1	94	635	-1007.90	-3205.39	-1228.25	-2985.03	-660.05	3362.95	1628.89	1732.47	3259.37	
410.95												
1	94	636	-987.06	-3413.16	-1116.27	-3283.95	-544.77	2861.54	1745.00	1745.06	2861.48	8.26
1	94	637	-913.36	-3611.41	-978.37	-3546.40	-413.73	2533.98	1403.86	1601.80	2336.04	-
429.55												
1	94	638	-814.71	-3770.01	-834.35	-3750.37	-240.13	2304.68	709.95	1341.88	1672.74	-
780.01												
1	94	639	-646.00	-3899.74	-646.20	-3899.53	25.83	1963.91	-155.61	1030.33	777.97	-
1052.22												
1	94	640	-306.83	-4070.32	-348.05	-4029.10	391.68	1531.91	-1198.06	627.71	-293.86	-
1284.86												
1	94	641	226.35	-4333.80	62.41	-4169.86	848.95	847.10	-2280.81	70.55	-1504.26	-
1351.28												
1	94	642	-818.24	-2585.59	-1941.43	-1462.40	-850.60	2417.39	-1292.64	627.65	497.09	
1853.87												
1	94	643	-1001.47	-2571.70	-1403.86	-2169.31	-685.52	2627.38	-64.37	972.55	1590.46	
1309.93												
1	94	644	-885.19	-2980.72	-1137.97	-2727.94	-682.51	3006.31	602.41	1059.83	2548.89	
943.59												
1	94	645	-802.82	-3398.77	-1026.38	-3175.21	-728.27	3265.52	833.99	1106.33	2993.19	
766.83												
1	94	646	-811.37	-3687.09	-1002.44	-3496.02	-716.19	2915.22	1023.84	1197.18	2741.87	
545.73												
1	94	647	-797.72	-3893.02	-921.48	-3769.26	-606.42	2161.22	1254.84	1258.06	2158.00	
53.92												
1	94	648	-700.96	-4124.55	-787.17	-4038.35	-536.37	2021.09	801.02	1109.21	1712.91	-
530.12												
1	94	649	-649.42	-4310.00	-704.68	-4254.74	-446.33	1957.00	180.76	875.57	1262.20	-
866.83												
1	94	650	-626.51	-4353.38	-644.13	-4335.77	-255.63	1658.71	-530.77	727.95	399.99	-
1082.39												
1	94	651	-450.40	-4282.24	-452.57	-4280.06	91.21	1521.46	-1568.03	569.12	-615.69	-
1426.64												
1	94	652	-121.44	-4236.32	-189.49	-4168.28	524.75	1208.95	-2428.87	180.35	-1400.27	-
1638.25												
1	94	653	-1550.82	-2205.26	-1792.27	-1963.81	-315.78	2204.19	-1876.62	422.62	-95.04	
2023.92												
1	94	654	-954.64	-2671.64	-1139.94	-2486.34	-532.75	1806.85	-483.67	502.96	820.22	
1134.22												
1	94	655	-654.47	-3467.44	-720.08	-3401.83	-424.56	2497.09	43.95	336.93	2204.10	
795.54												
1	94	656	-462.15	-3975.77	-598.61	-3839.31	-678.87	2986.43	161.58	391.82	2756.18	
772.91												
1	94	657	-512.62	-4517.20	-738.44	-4291.38	-923.75	2493.85	29.40	272.12	2251.13	
734.35												
1	94	658	-679.49	-4323.87	-752.21	-4251.15	-509.63	1140.91	450.45	504.50	1086.86	
185.47												
1	94	659	-384.94	-4626.26	-526.79	-4484.41	-762.57	1395.22	-301.71	168.09	925.43	-
759.28												
1	94	660	-417.60	-5014.38	-469.63	-4962.36	-486.25	1522.56	-411.37	125.24	985.95	-
865.91												
1	94	661	-309.07	-5575.22	-426.11	-5458.19	-776.28	939.28	-851.87	64.57	22.84	-
895.33												
1	94	662	-592.22	-4545.43	-620.21	-4517.44	-331.48	1095.07	-2054.10	355.41	-1314.44	-
1335.00												
1	94	663	-263.36	-4178.01	-309.48	-4131.89	-422.40	1448.11	-2704.57	146.01	-1402.48	-
1926.59												
1	94	664	-72.69	-1286.55	-77.05	-1282.18	-72.65	56.56	-297.56	11.17	-252.17	
118.37												
1	94	665	551.39	-307.20	12.25	231.94	415.01	-22.95	-364.24	-362.53	-24.67	
24.12												
1	94	666	-19.00	-1955.99	-238.37	-1736.63	613.83	641.05	-221.46	242.56	177.02	
430.01												
1	94	667	-171.09	-3515.90	-174.87	-3512.12	-112.42	1875.75	-202.14	-127.96	1801.57	
385.53												
1	94	668	-221.08	-4728.01	-226.06	-4723.03	149.77	2461.46	-112.20	-83.15	2432.41	
271.86												
1	94	669	-143.31	-5453.49	-180.43	-5416.37	442.43	1608.96	-155.92	-150.91	1603.95	
93.91												
1	94	670	-156.22	-5781.92	-190.86	-5747.28	-440.10	461.84	-77.61	461.23	-77.01	-
18.02												
1	94	671	-25.36	-6264.55	-75.03	-6214.88	554.48	61.67	-111.09	-89.62	40.20	
56.99												
1	94	672	-216.73	-6468.15	-218.69	-6466.20	110.53	639.97	-127.30	-56.48	569.15	-
222.10												
1	94	673	-61.66	-6707.32	-134.26	-6634.73	690.76	159.95	-785.87	-123.45	-502.47	-
433.28												
1	94	674	-478.15	-4001.26	-541.55	-3937.86	-468.34	551.92	-2085.26	454.91	-1988.26	-
496.40												
1	94	675	86.95	-3524.95	44.17	-3482.17	390.74	-18.22	-1075.47	-63.38	-1030.31	-
213.79												
1	94	676	145.10	-911.60	136.97	-903.47	92.33	567.80	-439.91	-305.55	433.45	-
342.55												
1	94	677	-71.62	-1748.14	-73.45	-1746.31	55.38	309.09	-79.43	-35.90	265.56	-
122.54												
1	94	678	1018.54	20.48	897.48	141.54	-325.84	-61.06	-173.73	-167.24	-67.55	-
26.25												
1	94	679	100.40	-3358.77	88.84	-3347.21	-199.64	339.35	-106.78	15.22	217.34	-
198.86												
1	94	680	141.37	-4138.95	130.55	-4128.13	-214.95	241.78	-127.37	35.22	79.19	-
183.26												
1	94	681	148.48	-4571.14	138.68	-4561.34	-214.87	132.47	-98.24	41.55	-7.32	-
112.74												
1	94	682	148.33	-4769.65	139.24	-4760.56	-211.23	45.46	-46.69	41.53	-42.76	-
18.62												
1	94	683	145.91	-4771.30	137.21	-4762.60	-206.63	83.56	-90.35	37.17	-43.97	
76.91												

Viale Duca Alessandro n. 11 – 43123 Parma
Cell. 335 1403156 – E mail ing.concari@gmail.com
Sito web: studioaire.it – P.IVA 02561480340

1	94	684	142.59	-4572.26	133.82	-4563.48	-203.24	162.80	-157.85	29.19	-24.23	158.08
1	94	685	139.42	-4139.40	129.67	-4129.65	-204.02	225.85	-201.42	18.37	6.07	213.55
1	94	686	138.01	-3412.23	124.92	-3399.14	-215.17	260.06	-212.56	6.49	41.01	235.68
1	94	687	140.26	-2313.41	114.71	-2287.86	-249.07	270.41	-177.76	-3.12	95.77	218.56
1	94	688	224.37	-892.99	98.08	-766.70	-353.78	325.74	-77.33	-15.33	263.74	145.41
1	94	689	428.73	36.40	403.33	61.79	-96.53	347.88	-129.90	-90.13	308.11	131.98
1	94	690	-994.94	-2689.15	-2287.85	-1396.24	720.31	447.68	-217.06	299.66	-69.04	-276.56
1	94	691	673.45	-778.38	-747.76	642.82	208.63	758.84	7.09	365.94	400.00	375.49
1	94	692	-1004.20	-2921.72	-2707.39	-1218.54	-604.19	1064.87	-179.90	976.52	-91.56	319.64
1	94	693	916.10	-2317.64	-2069.08	667.53	861.40	1884.87	231.21	1298.90	817.18	-790.97
1	106	17	696.34	-1071.43	632.24	-1007.32	330.47	444.48	-610.76	-49.80	-116.48	526.56
1	106	25	853.61	-1309.76	853.00	-1309.15	-36.29	368.99	-1086.43	-165.13	-552.31	701.49
1	106	33	945.97	-1562.66	942.15	-1558.85	-97.76	279.05	-1430.81	-227.75	-924.01	780.84
1	106	41	942.14	-1731.23	941.47	-1730.57	-42.14	166.46	-1675.14	-277.07	-1231.62	787.45
1	106	49	924.61	-1836.73	923.93	-1836.06	43.14	38.61	-1831.40	-320.09	-1472.71	736.27
1	106	57	924.24	-1904.93	918.44	-1899.14	127.90	-93.36	-1915.63	-355.69	-1653.29	639.71
1	106	65	944.26	-1951.63	929.95	-1937.32	203.12	-217.55	-1949.19	-382.98	-1783.76	509.02
1	106	73	979.06	-1985.66	954.81	-1961.41	267.06	-321.71	-1954.94	-402.21	-1874.45	353.54
1	106	81	1021.87	-2011.92	987.71	-1977.76	320.11	-393.11	-1954.38	-414.24	-1933.26	180.36
1	106	89	1066.92	-2033.20	1023.88	-1990.17	362.70	-419.88	-1964.90	-419.90	-1964.88	-5.46
1	106	97	1107.95	-2050.99	1057.97	-2001.02	394.16	-394.24	-1996.10	-419.66	-1970.68	-200.20
1	106	105	1134.49	-2065.27	1080.67	-2011.45	411.50	-314.72	-2046.83	-412.95	-1948.61	-400.60
1	106	113	1125.83	-2073.21	1073.13	-2020.52	407.19	-183.81	-2105.19	-396.53	-1892.47	-602.88
1	106	121	1041.52	-2065.88	998.16	-2022.52	364.49	-1.05	-2146.51	-359.80	-1787.76	-800.61
1	106	129	810.42	-2022.21	788.60	-2000.39	247.64	245.96	-2116.84	-274.20	-1596.68	-979.02
1	106	137	341.78	-1901.81	341.70	-1901.73	-13.35	587.81	-1881.98	-79.01	-1215.16	-1096.47
1	106	145	-365.66	-1658.69	-594.44	-1429.90	-493.44	1039.34	-1107.52	314.42	-382.60	-1015.28
1	106	165	661.49	-390.68	339.28	-68.47	484.97	388.83	-771.80	-210.88	-172.10	-579.99
1	106	173	36.17	-100.92	-11.66	-53.10	65.34	408.15	-815.61	-108.61	-298.85	-604.44
1	106	181	-162.22	-976.78	-888.52	-250.48	-253.18	327.99	-915.36	-61.81	-525.57	-576.81
1	106	189	-245.64	-1804.62	-1644.67	-405.59	-473.04	217.49	-1024.96	-57.39	-750.09	-515.72
1	106	197	-292.76	-2401.70	-2190.80	-503.66	-632.69	110.11	-1124.06	-72.17	-941.78	-437.88
1	106	205	-308.86	-2799.58	-2545.71	-562.74	-753.58	19.42	-1205.58	-92.26	-1093.90	-352.61
1	106	213	-304.30	-3035.79	-2741.96	-598.13	-846.32	-50.35	-1268.64	-110.85	-1208.13	-264.67
1	106	221	-285.20	-3140.07	-2806.01	-619.26	-917.66	-98.84	-1314.29	-124.89	-1288.24	-176.02
1	106	229	-252.19	-3135.98	-2756.91	-631.25	-974.40	-126.84	-1343.87	-133.07	-1337.63	-86.88
1	106	237	-200.87	-3047.90	-2611.93	-636.84	-1025.26	-134.87	-1358.61	-134.88	-1358.60	3.55
1	106	245	-124.11	-2908.84	-2395.09	-637.86	-1080.14	-122.17	-1359.78	-129.75	-1352.20	96.54
1	106	253	-18.44	-2763.82	-2145.69	-636.57	-1146.70	-86.08	-1348.71	-116.43	-1318.37	193.38
1	106	261	102.32	-2664.44	-1924.69	-637.44	-1224.54	-21.53	-1326.65	-92.06	-1256.11	295.10
1	106	269	188.16	-2657.74	-1819.20	-650.38	-1297.40	79.55	-1293.73	-50.80	-1163.38	402.52
1	106	277	143.59	-2782.98	-1943.51	-695.87	-1323.65	227.76	-1246.76	16.69	-1035.70	516.40
1	106	285	-148.36	-3097.88	-2435.86	-810.37	-1230.59	426.34	-1175.04	112.50	-861.19	635.68
1	106	293	-723.85	-3909.33	-3621.07	-1012.11	-913.87	615.67	-1050.63	169.49	-604.46	737.83
1	106	307	-638.13	-1590.98	-689.14	-1539.97	214.48	500.07	-948.16	-490.97	42.89	-673.12
1	106	315	-1541.33	-2294.42	-1577.21	-2258.55	160.40	207.26	-1546.75	-1293.54	-45.94	-616.45
1	106	323	-1918.06	-2952.98	-1943.83	-2927.21	161.27	-40.91	-1874.50	-1745.44	-169.97	-469.03
1	106	331	-2063.71	-3411.19	-2105.24	-3369.67	232.87	-210.42	-2006.93	-1972.28	-245.07	-247.07
1	106	339	-2092.42	-3667.58	-2162.53	-3597.47	324.85	-277.76	-2037.07	-2037.06	-277.77	4.01
1	106	347	-2051.79	-3719.61	-2155.62	-3615.77	402.98	-245.84	-2008.98	-1974.11	-280.71	245.47

Viale Duca Alessandro n. 11 – 43123 Parma
Cell. 335 1403156 – E mail ing.concari@gmail.com
Sito web: studioaire.it – P.IVA 02561480340

1	106	355	-1962.36	-3550.17	-2094.03	-3418.50	437.87	-142.99	-1921.46	-1801.47	-262.98	446.10
1	106	363	-1825.62	-3132.12	-1962.61	-2995.12	400.27	-8.95	-1752.16	-1529.62	-231.49	581.74
1	106	371	-1624.35	-2444.50	-1721.08	-2347.77	264.53	122.06	-1481.89	-1168.57	-191.27	635.91
1	106	379	-1304.82	-1538.32	-1310.48	-1532.67	35.90	234.03	-1103.87	-732.51	-137.32	599.11
1	106	387	-578.25	-852.94	-699.15	-732.04	-136.36	340.99	-598.40	-228.00	-29.41	459.08
1	106	395	238.45	-1555.86	-1327.89	10.48	-597.56	596.43	-1439.98	-420.09	-423.46	1018.20
1	106	403	-458.07	-2484.37	-469.38	-2473.06	-150.98	499.53	-1807.69	-1121.14	-187.02	1054.83
1	106	407	1385.47	293.96	1374.15	305.28	-110.59	240.89	-84.17	174.00	-17.29	131.40
1	106	408	1994.66	196.77	1978.85	212.57	-167.85	217.97	-195.43	31.98	-9.44	205.66
1	106	409	1979.81	185.83	1965.49	200.15	-159.62	233.17	-251.66	-14.78	-3.71	242.35
1	106	410	1875.26	179.01	1861.76	192.51	-150.72	234.29	-275.74	-45.05	3.60	253.85
1	106	411	-25.66	-3163.44	-100.52	-3088.58	-478.83	2154.66	-413.81	-151.95	1892.80	777.18
1	106	415	1793.33	175.53	1780.17	188.69	-145.33	215.55	-279.60	-74.14	10.09	243.96
1	106	416	1752.87	173.95	1739.95	186.88	-142.28	180.77	-266.34	-100.57	15.00	215.96
1	106	417	1748.77	173.12	1736.14	185.75	-140.52	135.59	-239.04	-121.92	18.47	173.66
1	106	418	1770.99	172.50	1758.73	184.75	-139.44	86.08	-202.84	-137.62	20.86	120.79
1	106	419	-148.18	-3657.53	-210.40	-3595.32	-463.11	2429.33	-227.90	-52.20	2253.63	660.30
1	106	423	1810.01	171.90	1798.17	183.74	-138.77	41.73	-167.50	-148.30	22.53	60.40
1	106	424	1857.01	171.42	1845.57	182.87	-138.44	23.88	-155.16	-155.02	23.74	-5.12
1	106	425	1901.32	171.32	1890.16	182.49	-138.53	50.76	-184.72	-158.59	24.64	-73.95
1	106	426	1925.82	172.03	1914.71	183.14	-139.16	104.58	-238.11	-158.90	25.37	-144.46
1	106	427	23.92	-4434.30	-20.83	-4389.56	-444.40	1898.22	-419.99	-320.83	1799.06	469.08
1	106	435	-275.48	-4633.21	-368.63	-4540.06	-630.27	-859.30	-1852.63	-1852.20	-859.73	-20.69
1	106	443	-657.92	-3868.54	-661.99	-3864.47	-114.28	476.01	-837.43	-787.30	425.88	-251.65
1	106	447	1900.19	174.13	1888.67	185.64	-140.53	169.32	-295.87	-152.79	26.24	-214.68
1	106	448	1771.64	178.04	1758.76	190.92	-142.69	241.12	-341.36	-128.10	27.86	-280.61
1	106	449	1452.08	181.27	1435.02	198.33	-146.24	324.22	-342.67	-49.25	30.80	-331.03
1	106	450	804.23	162.60	765.30	201.53	-153.18	441.09	-239.71	169.78	31.60	-333.31
1	106	451	-173.55	-4950.48	-179.91	-4944.11	-174.28	923.62	-568.91	-215.61	570.32	-634.42
1	106	455	248.80	-456.56	-432.44	224.68	-128.19	768.02	-71.96	708.64	-12.58	-215.30
1	106	456	-158.40	-907.04	-848.05	-217.39	-201.70	817.98	-251.00	771.18	-204.20	-218.71
1	106	457	694.65	-307.24	-271.88	659.29	184.87	94.57	5.58	22.11	78.04	-34.61
1	106	458	598.24	-255.88	9.73	332.63	-395.36	15.83	-2.64	6.90	6.29	9.23
1	106	459	387.56	-5688.86	387.20	-5688.50	-46.65	630.16	-1087.55	-331.99	-125.40	-852.62
1	106	467	490.54	-7497.62	489.92	-7497.00	-70.47	-790.76	-3365.42	-1557.77	-2598.40	-1177.49
1	106	475	-614.35	-1374.35	-821.36	-1167.34	338.34	584.80	-1820.49	-196.96	-1038.73	-1126.59
1	106	476	-584.17	-2430.99	-2425.08	-590.09	104.31	1324.44	-1514.88	-375.35	184.92	-1391.75
1	106	477	-1265.36	-3573.14	-3530.79	-1307.71	309.73	964.28	-1473.46	-809.72	300.54	-1085.11
1	106	478	-1858.69	-4295.22	-4214.64	-1939.27	435.72	601.92	-1507.85	-1184.64	278.71	-759.89
1	106	479	-2277.50	-4688.01	-4538.32	-2427.18	581.74	320.64	-1537.61	-1449.15	232.18	-395.66
1	106	480	-2482.83	-4890.28	-4638.29	-2734.83	737.00	179.17	-1592.29	-1591.83	178.71	-28.56
1	106	481	-2498.13	-4941.95	-4581.80	-2858.28	866.28	174.01	-1672.59	-1617.81	119.22	313.32
1	106	482	-2376.27	-4812.21	-4381.62	-2806.86	929.23	257.87	-1740.71	-1535.16	52.32	607.09
1	106	483	-2173.65	-4435.58	-4005.25	-2603.98	887.80	377.57	-1752.92	-1352.04	-23.31	832.69
1	106	484	-1940.36	-3740.79	-3380.60	-2300.55	720.25	491.52	-1679.88	-1079.72	-108.64	971.08
1	106	485	-1705.83	-2706.80	-2420.48	-1992.16	452.35	563.54	-1507.82	-741.43	-202.84	1000.06
1	106	486	-1103.89	-1833.56	-1151.69	-1785.77	180.53	528.31	-1224.71	-394.66	-301.74	875.28
1	106	487	2.79	-2237.97	-2146.71	-88.47	442.91	1830.77	-1377.15	9.31	444.31	-1589.14
1	106	488	-521.96	-3416.51	-3318.16	-620.31	524.43	1752.54	-948.40	-3.38	807.52	-1288.17
1	106	489	-1015.72	-4086.87	-3979.49	-1123.11	564.14	1495.53	-636.84	-86.12	944.81	-

Viale Duca Alessandro n. 11 – 43123 Parma
Cell. 335 1403156 – E mail ing.concari@gmail.com
Sito web: studioaire.it – P.IVA 02561480340

933.30												
1	106	490	-1429.94	-4428.89	-4311.79	-1547.04	580.90	1159.02	-387.09	-189.93	961.85	-
515.71												
1	106	491	-1734.75	-4535.67	-4405.81	-1864.61	588.96	911.25	-288.33	-282.13	905.06	-
85.97												
1	106	492	-1928.93	-4451.06	-4312.88	-2067.12	573.95	876.45	-429.51	-345.82	792.76	
319.83												
1	106	493	-2036.16	-4175.38	-4044.70	-2166.85	512.34	970.84	-713.56	-374.89	632.18	
675.10												
1	106	494	-2096.14	-3681.49	-3580.39	-2197.24	387.38	1063.02	-1009.03	-370.79	424.79	
956.62												
1	106	495	-2155.37	-2939.32	-2880.68	-2214.01	206.23	1079.72	-1255.26	-342.23	166.68	
1139.42												
1	106	496	-1919.98	-2287.70	-1920.84	-2286.84	17.78	960.79	-1422.70	-307.19	-154.72	
1189.30												
1	106	497	-732.22	-2478.40	-737.32	-2473.31	-94.19	623.64	-1488.35	-290.41	-574.30	
1046.41												
1	106	498	-131.34	-2155.29	-2094.91	-191.71	344.32	1997.28	-1136.34	245.36	615.57	-
1555.84												
1	106	499	-327.92	-3180.92	-3069.61	-439.23	552.43	2199.13	-497.43	470.26	1231.45	-
1293.45												
1	106	500	-656.44	-3781.25	-3670.19	-767.50	578.53	2133.34	-19.16	580.05	1534.13	-
964.76												
1	106	501	-999.32	-4079.29	-3981.73	-1096.88	539.41	1874.53	359.52	605.17	1628.88	-
558.41												
1	106	502	-1311.15	-4142.38	-4061.74	-1391.78	470.96	1596.51	555.95	571.43	1581.04	-
125.96												
1	106	503	-1579.35	-4004.57	-3943.56	-1640.36	379.81	1509.16	414.86	498.82	1425.20	
291.25												
1	106	504	-1813.39	-3675.54	-3637.75	-1851.17	262.56	1556.13	21.38	399.74	1177.77	
661.46												
1	106	505	-2037.60	-3150.93	-3137.51	-2051.02	121.48	1558.85	-436.39	279.59	842.86	
957.04												
1	106	506	-2276.51	-2435.60	-2432.41	-2279.70	-22.30	1432.90	-881.97	138.03	412.90	
1149.24												
1	106	507	-1517.64	-2592.51	-1531.65	-2578.50	-121.93	1121.95	-1286.25	-28.32	-135.98	
1202.89												
1	106	508	-482.68	-2980.94	-487.50	-2976.12	-109.63	580.75	-1654.72	-217.69	-856.29	
1071.16												
1	106	509	-351.27	-2225.88	-2221.07	-356.08	94.88	1966.97	-870.77	371.94	724.26	-
1407.89												
1	106	510	-426.43	-2945.73	-2880.77	-491.38	399.29	2416.94	-102.28	743.88	1570.78	-
1189.82												
1	106	511	-610.77	-3437.99	-3356.07	-692.69	474.21	2551.52	457.08	978.37	2030.24	-
905.57												
1	106	512	-866.32	-3686.39	-3615.51	-937.20	441.42	2427.69	874.96	1094.61	2208.03	-
541.13												
1	106	513	-1148.67	-3721.38	-3670.55	-1199.49	358.02	2198.27	1090.94	1109.64	2179.58	-
142.67												
1	106	514	-1438.56	-3564.92	-3535.33	-1468.15	249.09	2052.24	978.96	1040.20	1991.00	
248.97												
1	106	515	-1735.64	-3228.59	-3217.54	-1746.69	128.01	1995.52	571.33	900.20	1666.65	
600.18												
1	106	516	-2050.87	-2720.36	-2720.21	-2051.02	9.91	1875.16	38.66	699.93	1213.90	
881.56												
1	106	517	-2034.09	-2420.33	-2051.10	-2403.32	-79.24	1603.68	-532.40	447.18	624.10	
1064.37												
1	106	518	-1230.89	-2828.88	-1237.17	-2822.59	-100.01	1137.15	-1116.94	150.43	-130.22	
1118.27												
1	106	519	-339.77	-3313.40	-339.78	-3313.39	-4.79	474.24	-1751.06	-174.93	-1101.89	
1011.52												
1	106	520	-472.66	-2395.36	-2380.36	-487.67	-169.20	1829.17	-601.59	434.95	792.63	-
1202.15												
1	106	521	430.17	4.33	416.67	17.83	-74.61	244.63	-105.13	213.84	-74.34	
99.11												
1	106	522	-592.06	-2770.59	-2758.11	-604.54	164.46	2495.34	237.49	896.92	1835.90	-
1026.67												
1	106	523	-715.07	-3115.47	-3079.62	-750.92	291.15	2823.37	821.51	1210.58	2434.31	-
792.14												
1	106	524	-907.15	-3300.44	-3262.99	-944.60	297.03	2851.05	1228.20	1387.83	2691.41	-
483.31												
1	106	525	-1154.17	-3309.54	-3282.61	-1181.10	239.41	2702.66	1423.64	1438.92	2687.39	-
138.93												
1	106	526	-1441.47	-3147.93	-3134.10	-1455.29	152.96	2512.25	1339.88	1376.63	2475.49	
204.31												
1	106	527	-1764.68	-2823.69	-2820.13	-1768.24	61.34	2324.70	975.88	1214.42	2086.16	
514.63												
1	106	528	-2126.13	-2348.85	-2348.04	-2126.94	-13.38	2062.52	433.34	965.43	1530.44	
764.04												
1	106	529	-1731.94	-2542.50	-1734.46	-2539.98	-45.15	1652.28	-207.77	643.09	801.42	
926.65												
1	106	530	-1013.33	-3010.79	-1013.33	-3010.78	-3.42	1066.04	-929.06	263.25	-126.27	
978.35												
1	106	531	-237.94	-3536.00	-244.00	-3529.94	141.22	340.62	-1791.20	-152.49	-1298.09	
898.92												
1	106	532	-499.85	-2584.87	-2502.86	-581.85	-405.29	1638.33	-337.56	464.18	836.60	-
970.24												
1	106	533	-713.69	-2673.29	-2669.65	-717.33	-84.37	2496.88	522.05	980.22	2038.71	-
833.61												
1	106	534	-852.87	-2851.67	-2848.74	-855.80	76.47	3006.01	1090.01	1342.86	2753.16	-
648.48												
1	106	535	-1022.99	-2958.26	-2949.77	-1031.49	127.93	3178.75	1460.60	1559.53	3079.82	-
400.24												
1	106	536	-1247.52	-2936.63	-2928.73	-1255.43	115.27	3110.21	1626.04	1635.76	3100.49	-
119.70												
1	106	537	-1525.69	-2772.51	-2768.21	-1529.99	73.09	2892.66	1560.94	1581.09	2872.51	
162.58												
1	106	538	-1855.07	-2466.69	-2465.37	-1856.40	28.47	2580.64	1258.04	1407.94	2430.74	

Viale Duca Alessandro n. 11 – 43123 Parma
Cell. 335 1403156 – E mail ing.concari@gmail.com
Sito web: studioaire.it – P.IVA 02561480340

419.27												
1	106	539	-2027.56	-2236.55	-2027.70	-2236.41	5.42	2167.97	752.72	1130.76	1789.94	
626.18												
1	106	540	-1473.39	-2670.83	-1474.02	-2670.20	27.47	1623.60	89.15	766.22	946.53	
761.91												
1	106	541	-831.99	-3158.20	-837.87	-3152.32	116.86	946.58	-732.54	334.09	-120.05	
808.27												
1	106	542	-146.23	-3691.47	-170.04	-3667.65	289.57	202.21	-1789.57	-141.63	-1445.73	
752.75												
1	106	543	-472.84	-2739.30	-2564.34	-647.80	-604.92	1425.57	-82.50	477.10	865.97	-
728.54												
1	106	544	-758.01	-2642.93	-2588.48	-812.46	-315.71	2463.23	751.84	1025.55	2189.53	-
627.30												
1	106	545	-955.13	-2666.35	-2655.22	-966.25	-137.52	3134.37	1278.65	1418.11	2994.91	-
489.22												
1	106	546	-1144.49	-2683.92	-2682.57	-1145.84	-45.56	3429.42	1608.11	1659.75	3377.79	-
302.28												
1	106	547	-1369.32	-2622.42	-2622.35	-1369.39	-9.26	3424.74	1748.23	1753.02	3419.95	-
89.46												
1	106	548	-1644.34	-2450.95	-2450.95	-1644.34	0.25	3191.66	1694.48	1705.12	3181.02	
125.75												
1	106	549	-1972.76	-2161.71	-2161.34	-1973.13	8.42	2781.67	1444.69	1527.33	2699.03	
321.96												
1	106	550	-1756.55	-2357.76	-1758.93	-2355.38	37.75	2225.00	1001.55	1234.48	1992.07	
480.33												
1	106	551	-1253.10	-2794.93	-1260.69	-2787.33	107.95	1547.05	357.92	844.75	1060.23	
584.72												
1	106	552	-674.36	-3281.27	-695.62	-3260.02	234.41	802.94	-535.10	379.70	-111.86	
622.24												
1	106	553	-55.37	-3806.43	-104.05	-3757.75	424.52	74.58	-1761.99	-136.00	-1551.41	
585.16												
1	106	554	-416.12	-2838.18	-2561.19	-693.11	-770.81	1209.21	160.72	483.67	886.26	-
484.06												
1	106	555	-734.98	-2651.94	-2499.73	-887.18	-518.26	2422.22	926.03	1052.18	2296.07	-
415.73												
1	106	556	-991.52	-2562.47	-2488.19	-1065.80	-333.42	3225.70	1404.36	1463.27	3166.79	-
322.21												
1	106	557	-1226.01	-2493.56	-2457.99	-1261.58	-209.32	3610.84	1700.54	1720.77	3590.60	-
195.58												
1	106	558	-1474.92	-2383.48	-2364.98	-1493.42	-128.34	3650.23	1824.10	1825.55	3648.78	-
51.47												
1	106	559	-1759.54	-2196.03	-2184.83	-1770.73	-69.00	3407.72	1777.78	1783.22	3402.28	
93.98												
1	106	560	-1907.76	-2097.57	-1908.29	-2097.05	-9.94	2930.01	1565.48	1604.04	2891.44	
226.13												
1	106	561	-1533.03	-2476.78	-1537.96	-2471.85	68.03	2253.26	1186.44	1302.64	2137.06	
332.36												
1	106	562	-1069.09	-2908.60	-1086.97	-2890.72	180.48	1440.35	599.65	897.68	1142.32	
402.16												
1	106	563	-537.53	-3385.27	-578.09	-3344.70	337.45	652.76	-345.41	411.39	-104.04	
427.40												
1	106	564	34.02	-3896.15	-41.94	-3820.19	541.08	-29.40	-1725.09	-131.49	-1623.00	
403.35												
1	106	565	-340.03	-2881.41	-2499.17	-722.27	-908.47	1009.36	380.20	489.28	900.28	-
238.19												
1	106	566	-668.74	-2672.79	-2398.07	-943.46	-689.26	2394.00	1040.42	1071.11	2363.32	-
201.48												
1	106	567	-966.59	-2523.19	-2338.98	-1150.79	-502.79	3286.75	1481.40	1494.08	3274.07	-
150.76												
1	106	568	-1246.35	-2391.72	-2268.61	-1369.46	-354.76	3726.13	1758.27	1761.80	3722.60	-
83.28												
1	106	569	-1525.26	-2241.20	-2151.27	-1615.19	-237.27	3789.86	1874.37	1874.40	3789.83	-
7.85												
1	106	570	-1791.68	-2070.84	-1965.58	-1896.95	-135.30	3540.32	1833.93	1836.54	3537.72	
66.65												
1	106	571	-1699.72	-2220.95	-1701.67	-2218.99	-31.84	3021.28	1644.67	1657.57	3008.38	
132.62												
1	106	572	-1353.00	-2588.25	-1359.40	-2581.86	88.63	2261.87	1314.32	1351.54	2224.64	
184.09												
1	106	573	-919.84	-3009.92	-947.27	-2982.50	237.83	1315.53	813.16	936.99	1191.70	
216.51												
1	106	574	-422.09	-3473.59	-481.51	-3414.17	421.66	519.15	-182.38	436.31	-99.55	
226.38												
1	106	575	117.92	-3968.95	15.53	-3866.57	638.72	-97.26	-1695.59	-125.64	-1667.21	
211.08												
1	106	576	-249.95	-2878.38	-2389.83	-738.50	-1022.47	909.29	496.24	496.52	909.01	
10.74												
1	106	577	-583.48	-2687.19	-2284.51	-986.16	-827.63	2393.82	1087.41	1087.60	2393.63	
15.79												
1	106	578	-907.87	-2519.03	-2201.53	-1225.38	-640.90	3319.94	1517.61	1517.94	3319.62	
24.30												
1	106	579	-1215.91	-2361.00	-2105.58	-1471.33	-476.69	3776.85	1791.26	1791.82	3776.29	
33.29												
1	106	580	-1499.82	-2206.78	-1972.23	-1734.37	-332.87	3845.49	1908.74	1909.57	3844.66	
40.19												
1	106	581	-1672.27	-2134.54	-1784.94	-2021.86	-198.47	3588.77	1874.29	1875.36	3587.69	
42.97												
1	106	582	-1529.79	-2343.04	-1534.20	-2338.62	-59.76	3050.39	1696.42	1697.66	3049.15	
41.00												
1	106	583	-1210.97	-2693.16	-1217.19	-2686.94	95.78	2254.78	1388.16	1389.59	2253.35	
35.21												
1	106	584	-803.69	-3100.30	-837.52	-3066.46	276.70	1209.43	965.94	969.06	1206.30	
27.42												
1	106	585	-329.97	-3548.94	-404.98	-3473.93	485.61	459.04	-101.89	458.39	-101.24	
19.11												
1	106	586	191.31	-4029.12	65.33	-3903.14	718.20	-117.07	-1688.45	-117.13	-1688.39	9.81
1	106	587	-154.37	-2842.44	-2250.47	-746.34	-1113.93	1043.12	374.97	506.25	911.84	
265.48												

Viale Duca Alessandro n. 11 – 43123 Parma
Cell. 335 1403156 – E mail ing.concari@gmail.com
Sito web: studioaire.it – P.IVA 02561480340

1	106	588	-503.05	-2684.85	-2163.74	-1024.17	-930.28	2429.17	1060.14	1102.53	2386.78	237.14
1	106	589	-848.04	-2522.97	-2070.79	-1300.22	-743.57	3326.69	1512.39	1535.32	3303.77	202.66
1	106	590	-1165.19	-2370.86	-1958.97	-1577.09	-571.80	3764.24	1798.94	1810.98	3752.21	153.33
1	106	591	-1423.76	-2251.99	-1816.62	-1859.13	-413.57	3817.62	1926.80	1931.29	3813.13	92.02
1	106	592	-1525.40	-2259.15	-1632.36	-2152.19	-258.92	3551.17	1900.04	1900.34	3550.86	22.51
1	106	593	-1388.46	-2470.45	-1397.00	-2461.91	-95.75	3013.17	1723.51	1725.39	3011.28	-49.24
1	106	594	-1100.51	-2797.21	-1104.94	-2792.78	86.57	2236.23	1401.99	1418.19	2220.04	-115.11
1	106	595	-719.01	-3183.55	-754.69	-3147.86	294.40	1280.17	898.24	995.50	1182.91	-166.39
1	106	596	-264.08	-3613.70	-349.44	-3528.34	527.87	537.95	-170.66	478.98	-111.69	-195.73
1	106	597	248.23	-4078.47	102.77	-3933.02	779.86	-80.37	-1713.10	-105.32	-1688.15	-200.29
1	106	598	-71.95	-2787.31	-2104.61	-754.65	-1178.01	1274.91	149.56	518.33	906.13	528.21
1	106	599	-454.58	-2659.28	-2041.26	-1072.59	-990.25	2494.15	958.36	1113.01	2339.50	462.15
1	106	600	-814.93	-2517.92	-1940.27	-1392.58	-806.26	3307.32	1457.12	1539.86	3224.59	382.40
1	106	601	-1118.98	-2400.82	-1816.93	-1702.86	-638.38	3689.84	1769.99	1810.32	3649.51	275.32
1	106	602	-1329.86	-2345.00	-1671.47	-2003.39	-479.67	3706.01	1917.62	1929.85	3693.79	147.33
1	106	603	-1384.90	-2410.81	-1495.68	-2300.04	-318.39	3424.17	1902.36	1902.38	3424.15	5.64
1	106	604	-1264.69	-2614.85	-1279.98	-2599.56	-142.84	2906.49	1716.82	1732.95	2890.35	-137.62
1	106	605	-1014.13	-2910.23	-1015.84	-2908.51	57.00	2210.75	1340.40	1431.55	2119.60	-266.50
1	106	606	-664.22	-3265.73	-696.22	-3233.73	286.74	1433.73	696.11	1013.24	1116.59	-365.17
1	106	607	-228.67	-3670.17	-317.21	-3581.63	544.86	706.69	-342.94	497.52	-133.77	-419.28
1	106	608	280.28	-4116.70	120.78	-3957.20	822.11	15.20	-1769.98	-89.56	-1665.22	-419.57
1	106	609	-37.62	-2722.85	-1980.80	-779.67	-1200.81	1526.99	-109.10	532.37	885.52	798.76
1	106	610	-469.55	-2604.31	-1918.98	-1154.88	-996.66	2567.46	788.94	1112.19	2244.21	685.86
1	106	611	-825.91	-2498.87	-1798.79	-1525.99	-825.29	3256.87	1338.70	1516.97	3078.61	556.92
1	106	612	-1081.79	-2451.94	-1664.91	-1868.82	-677.45	3555.64	1682.23	1769.87	3468.00	395.61
1	106	613	-1225.46	-2481.29	-1522.61	-2184.14	-533.73	3511.32	1857.90	1884.07	3485.16	206.33
1	106	614	-1244.94	-2597.60	-1361.73	-2480.81	-379.92	3202.85	1861.48	1861.51	3202.82	-5.88
1	106	615	-1145.65	-2792.23	-1171.68	-2766.20	-205.37	2728.21	1654.03	1702.04	2680.20	-221.96
1	106	616	-942.06	-3047.03	-942.06	-3047.03	0.90	2173.14	1186.93	1414.63	1945.44	-415.59
1	106	617	-636.84	-3356.22	-659.35	-3333.72	246.37	1572.10	441.47	1013.63	999.95	-565.27
1	106	618	-229.28	-3720.96	-311.34	-3638.90	528.96	904.98	-565.11	512.29	-172.42	-650.44
1	106	619	274.43	-4140.34	108.82	-3974.73	838.87	168.08	-1851.43	-67.54	-1615.81	-648.32
1	106	620	-105.65	-2649.49	-1906.50	-848.64	-1156.72	1774.05	-390.22	548.12	835.71	1072.54
1	106	621	-576.97	-2513.93	-1787.87	-1303.03	-937.65	2610.61	563.18	1087.90	2085.89	893.87
1	106	622	-874.24	-2480.31	-1627.50	-1727.04	-801.49	3156.89	1146.45	1440.37	2862.98	710.29
1	106	623	-1032.15	-2548.98	-1486.07	-2095.06	-694.61	3363.54	1504.13	1654.66	3213.01	507.19
1	106	624	-1100.66	-2673.53	-1356.51	-2417.68	-580.48	3237.59	1709.02	1758.77	3187.84	271.24
1	106	625	-1094.03	-2834.11	-1217.19	-2710.95	-446.25	2879.64	1745.27	1745.33	2879.58	-8.34
1	106	626	-1016.05	-3022.48	-1058.18	-2980.35	-287.66	2475.78	1498.32	1600.60	2373.50	-299.19
1	106	627	-869.61	-3230.09	-873.08	-3226.63	-90.39	2096.84	933.54	1338.00	1692.39	-554.00
1	106	628	-630.74	-3471.29	-639.94	-3462.08	161.45	1658.39	143.18	978.78	822.79	-753.58
1	106	629	-270.68	-3770.87	-333.88	-3707.66	466.08	1100.84	-819.41	521.05	-239.62	-881.58
1	106	630	211.43	-4140.20	53.25	-3982.02	814.44	378.57	-1945.90	-32.05	-1535.27	-886.49
1	106	631	-343.05	-2550.65	-1892.35	-1001.36	-1009.90	1983.16	-695.91	562.89	724.35	1337.10
1	106	632	-773.74	-2394.31	-1618.59	-1549.47	-809.55	2557.42	295.40	1017.25	1835.57	1054.41
1	106	633	-902.52	-2512.69	-1400.16	-2015.05	-744.07	2967.14	879.76	1265.84	2581.06	810.46
1	106	634	-929.45	-2730.73	-1263.77	-2396.41	-700.31	3117.25	1199.17	1409.78	2906.65	599.66
1	106	635	-943.13	-2937.07	-1164.21	-2715.99	-626.06	2896.09	1413.74	1502.24	2807.60	351.20
1	106	636	-923.29	-3132.02	-1051.09	-3004.22	-515.70	2438.24	1508.51	1508.53	2438.22	4.33
1	106	637	-857.67	-3327.33	-920.71	-3264.30	-389.49	2141.94	1197.96	1378.12	1961.78	-370.95

Viale Duca Alessandro n. 11 – 43123 Parma
Cell. 335 1403156 – E mail ing.concari@gmail.com
Sito web: studioaire.it – P.IVA 02561480340

1	106	638	-772.35	-3495.32	-791.35	-3476.32	-226.65	1934.42	580.20	1147.18	1367.43	-668.10
1	106	639	-629.82	-3644.84	-629.88	-3644.78	13.66	1632.36	-185.29	872.26	574.81	-896.58
1	106	640	-349.73	-3833.30	-381.58	-3801.45	331.59	1251.32	-1099.50	518.40	-366.57	-1088.94
1	106	641	68.24	-4095.37	-57.52	-3969.61	712.60	650.82	-2043.52	32.31	-1425.00	-1133.11
1	106	642	-793.18	-2378.11	-1896.30	-1274.99	-729.03	2081.36	-1048.42	551.90	481.04	1564.49
1	106	643	-933.66	-2315.58	-1362.18	-1887.06	-639.19	2290.71	-4.50	847.06	1439.15	1108.76
1	106	644	-816.80	-2658.45	-1094.88	-2380.37	-659.40	2634.93	544.07	923.87	2255.13	806.14
1	106	645	-738.62	-3028.70	-979.20	-2788.12	-702.19	2842.78	732.80	965.28	2610.31	660.67
1	106	646	-746.74	-3293.07	-945.55	-3094.27	-683.16	2511.60	892.80	1043.60	2360.81	470.50
1	106	647	-737.89	-3487.41	-863.20	-3362.11	-573.44	1833.99	1090.57	1093.01	1831.55	42.53
1	106	648	-652.65	-3711.70	-736.12	-3628.22	-498.39	1710.97	676.19	957.05	1430.10	-460.16
1	106	649	-609.45	-3899.86	-660.42	-3848.89	-406.34	1642.15	130.64	750.79	1022.01	-743.49
1	106	650	-591.23	-3970.60	-606.38	-3955.45	-225.77	1380.54	-502.93	620.35	257.26	-924.07
1	106	651	-434.72	-3952.09	-436.65	-3950.16	82.28	1259.00	-1412.48	477.32	-630.80	-1215.41
1	106	652	-166.93	-3954.39	-219.50	-3901.82	443.11	971.02	-2151.22	133.30	-1313.51	-1383.39
1	106	653	-1302.72	-1972.90	-1663.70	-1611.91	-334.09	1889.80	-1538.84	372.15	-21.19	1703.00
1	106	654	-836.84	-2300.08	-1067.23	-2069.69	-532.95	1592.82	-357.53	437.65	797.63	958.42
1	106	655	-604.62	-2941.01	-698.31	-2847.32	-458.38	2216.35	59.45	305.14	1970.66	685.26
1	106	656	-429.37	-3430.63	-582.24	-3277.75	-659.89	2608.91	149.57	348.26	2410.21	670.21
1	106	657	-464.09	-3949.52	-695.81	-3717.81	-868.30	2147.95	25.72	240.83	1932.84	640.49
1	106	658	-622.63	-3790.61	-700.33	-3712.92	-489.99	946.90	403.43	450.96	899.37	153.54
1	106	659	-353.56	-4081.16	-489.44	-3945.27	-698.61	1182.10	-279.43	141.53	761.14	-661.85
1	106	660	-392.18	-4434.73	-441.88	-4385.03	-445.47	1266.51	-360.37	111.97	794.17	-738.47
1	106	661	-300.03	-4958.62	-401.04	-4857.60	-678.52	760.24	-766.20	57.60	-63.56	-760.81
1	106	662	-531.07	-4084.15	-552.92	-4062.30	-277.78	919.53	-1832.66	311.01	-1224.14	-1142.13
1	106	663	-224.93	-3797.67	-265.08	-3757.52	-376.58	1200.23	-2370.18	117.28	-1287.23	-1641.28
1	106	664	-77.43	-944.81	-77.55	-944.69	-9.98	63.62	-212.47	15.19	-164.04	105.00
1	106	665	393.79	-321.77	-62.18	134.20	344.04	-30.54	-301.77	-300.00	-32.31	21.82
1	106	666	17.47	-1483.51	-198.51	-1267.53	526.81	596.38	-139.37	192.70	264.31	366.13
1	106	667	-169.03	-2749.24	-170.53	-2747.74	-62.23	1700.76	-169.17	-109.37	1640.96	329.01
1	106	668	-206.09	-3877.12	-211.85	-3871.35	145.32	2162.93	-98.08	-72.85	2137.71	237.48
1	106	669	-136.28	-4593.44	-173.65	-4556.07	406.38	1372.93	-138.35	-133.93	1368.51	81.58
1	106	670	-157.91	-4915.51	-187.24	-4886.19	-372.39	417.20	-115.90	417.00	-115.70	-10.38
1	106	671	-32.79	-5381.11	-78.49	-5335.41	492.25	29.70	-118.04	-93.91	5.57	54.62
1	106	672	-204.87	-5586.00	-207.52	-5583.36	119.24	512.61	-111.58	-46.65	447.67	-190.57
1	106	673	-62.00	-5820.32	-131.32	-5750.99	628.01	110.73	-730.91	-107.56	-512.62	-368.88
1	106	674	-444.56	-3361.96	-496.29	-3310.23	-385.02	478.67	-1882.46	400.95	-1804.73	-421.28
1	106	675	74.10	-2951.96	35.46	-2913.33	339.74	-24.39	-982.95	-58.92	-948.42	-178.63
1	106	676	118.00	-752.59	107.25	-741.84	96.14	467.22	-382.19	-263.70	348.73	-294.28
1	106	677	-41.69	-1457.98	-41.78	-1457.89	11.28	240.77	-55.30	-27.29	212.76	-86.65
1	106	678	836.16	-12.93	764.32	58.92	-236.31	-53.42	-140.18	-132.54	-61.06	-24.58
1	106	679	112.06	-2717.15	98.15	-2703.24	-197.92	260.90	-71.75	13.13	176.03	-145.02
1	106	680	145.64	-3302.82	132.81	-3289.99	-209.90	181.16	-85.88	28.88	66.40	-132.20
1	106	681	150.60	-3623.41	139.03	-3611.85	-208.61	94.04	-62.91	33.78	-2.65	-76.33
1	106	682	149.61	-3769.62	138.90	-3758.91	-204.60	33.50	-30.44	33.42	-30.36	-2.34
1	106	683	146.85	-3765.93	136.59	-3755.68	-200.08	77.13	-77.56	29.31	-29.74	71.49
1	106	684	143.46	-3602.72	133.09	-3592.34	-196.89	137.99	-127.99	22.01	-12.02	131.90
1	106	685	140.55	-3245.06	128.96	-3233.47	-197.71	181.97	-157.15	12.28	12.54	169.56
1	106	686	140.26	-2634.52	124.53	-2618.79	-208.35	198.66	-161.33	1.86	35.46	179.21

Viale Duca Alessandro n. 11 – 43123 Parma
Cell. 335 1403156 – E mail ing.concari@gmail.com
Sito web: studioaire.it – P.IVA 02561480340

1	106	687	148.18	-1703.95	116.32	-1672.09	-240.83	192.36	-133.07	-5.57	64.86	158.86
1	106	688	274.13	-562.97	111.78	-400.62	-330.97	222.91	-53.62	-11.42	180.71	99.44
1	106	689	405.86	147.59	356.29	197.16	-101.71	247.64	-95.24	-67.56	219.97	93.40
1	106	690	-853.25	-1949.99	-1637.14	-1166.10	495.21	303.19	-190.26	164.77	-51.84	-221.69
1	106	691	641.85	-632.68	-551.44	560.60	311.37	534.65	12.98	256.24	291.38	260.24
1	106	692	-826.14	-2199.75	-2058.37	-967.52	-417.39	863.10	-154.14	781.67	-72.71	276.04
1	106	693	813.71	-2003.03	-1814.48	625.17	703.94	1595.71	205.64	1127.21	674.14	-657.08
1	114	17	694.45	-1034.80	633.81	-974.16	318.09	387.43	-567.24	-61.95	-117.85	476.51
1	114	25	816.52	-1287.32	816.07	-1286.87	-30.62	320.95	-1019.38	-165.97	-532.46	644.63
1	114	33	877.10	-1545.93	874.43	-1543.26	-80.44	241.42	-1356.48	-222.48	-892.58	725.31
1	114	41	854.54	-1718.45	854.37	-1718.29	-20.35	139.64	-1601.53	-268.72	-1193.18	737.74
1	114	49	828.00	-1827.09	826.42	-1825.52	64.63	22.20	-1762.02	-310.12	-1429.69	694.63
1	114	57	824.22	-1897.42	816.34	-1889.55	146.20	-100.21	-1851.87	-344.85	-1607.22	607.19
1	114	65	843.49	-1945.16	826.57	-1928.23	216.57	-216.15	-1891.20	-371.64	-1735.70	486.09
1	114	73	878.41	-1979.24	851.74	-1952.57	274.79	-313.94	-1901.85	-390.61	-1825.18	340.39
1	114	81	921.33	-2004.77	885.50	-1968.95	321.78	-381.64	-1904.26	-402.51	-1883.39	177.05
1	114	89	966.27	-2024.76	922.70	-1981.18	358.37	-408.16	-1914.93	-408.16	-1914.93	1.13
1	114	97	1007.51	-2040.86	958.28	-1991.63	384.25	-386.04	-1943.08	-408.01	-1921.12	-183.62
1	114	105	1035.78	-2053.21	983.92	-2001.35	396.88	-313.42	-1988.11	-401.57	-1899.97	-373.96
1	114	113	1032.44	-2059.15	982.60	-2009.31	389.36	-191.95	-2039.30	-385.82	-1845.43	-566.18
1	114	121	960.08	-2049.91	919.79	-2009.61	345.93	-20.55	-2073.64	-350.71	-1743.47	-754.22
1	114	129	751.35	-2004.45	731.60	-1984.70	232.47	213.36	-2039.97	-268.90	-1557.71	-924.19
1	114	137	317.73	-1881.11	317.57	-1880.95	-18.70	540.15	-1809.88	-81.74	-1187.99	-1036.68
1	114	145	-352.41	-1625.95	-574.39	-1403.97	-483.14	975.93	-1060.99	298.04	-383.09	-959.83
1	114	165	625.32	-273.10	369.27	-17.05	405.56	372.56	-731.49	-212.67	-146.26	-551.02
1	114	173	-19.16	-92.97	-87.42	-24.71	-19.46	397.33	-766.78	-104.64	-264.81	-576.52
1	114	181	-108.25	-1130.33	-1009.44	-229.15	-330.07	321.21	-861.79	-56.22	-484.37	-551.40
1	114	189	-202.98	-1967.38	-1784.34	-386.03	-538.02	215.06	-968.32	-50.78	-702.48	-493.88
1	114	197	-258.65	-2562.02	-2336.51	-484.16	-684.54	111.80	-1065.08	-64.58	-888.71	-420.08
1	114	205	-282.28	-2951.93	-2691.40	-542.81	-792.25	24.52	-1144.74	-83.78	-1036.44	-338.97
1	114	213	-285.14	-3177.87	-2885.28	-577.73	-872.23	-42.71	-1206.35	-101.65	-1147.42	-255.16
1	114	221	-274.02	-3271.22	-2946.72	-598.51	-931.28	-89.57	-1251.00	-115.18	-1225.39	-170.54
1	114	229	-250.25	-3255.98	-2895.90	-610.33	-976.04	-116.82	-1280.05	-123.12	-1273.75	-85.36
1	114	237	-210.39	-3155.88	-2750.34	-615.93	-1014.92	-124.94	-1294.73	-124.94	-1294.73	1.12
1	114	245	-148.28	-3002.45	-2533.62	-617.11	-1057.51	-113.22	-1296.28	-120.12	-1289.37	90.11
1	114	253	-60.57	-2839.17	-2283.71	-616.03	-1111.24	-79.09	-1285.94	-107.45	-1257.58	182.82
1	114	261	41.21	-2717.23	-2059.15	-616.87	-1175.67	-17.67	-1264.84	-84.17	-1198.35	280.20
1	114	269	112.88	-2684.79	-1942.96	-628.94	-1234.94	78.79	-1233.02	-44.63	-1109.60	382.98
1	114	277	67.43	-2781.32	-2042.34	-671.56	-1248.63	220.42	-1187.33	20.09	-987.01	491.81
1	114	285	-201.69	-3059.04	-2481.82	-778.90	-1147.23	410.03	-1117.63	111.76	-819.36	605.55
1	114	293	-719.29	-3791.40	-3543.14	-967.55	-837.29	588.53	-998.39	163.65	-573.51	702.66
1	114	307	-649.73	-1478.37	-695.68	-1432.42	189.65	445.24	-910.40	-500.38	35.21	-622.68
1	114	315	-1537.62	-2149.71	-1578.20	-2109.13	152.29	170.35	-1490.91	-1268.66	-51.89	-565.52
1	114	323	-1910.60	-2772.78	-1942.73	-2740.65	163.32	-60.62	-1813.21	-1703.07	-170.76	-425.33
1	114	331	-2051.27	-3210.14	-2102.45	-3158.96	238.10	-215.22	-1948.63	-1921.15	-242.70	-216.50
1	114	339	-2075.15	-3457.87	-2158.70	-3374.33	329.45	-273.74	-1982.51	-1982.31	-273.94	18.49
1	114	347	-2030.65	-3511.75	-2151.30	-3391.09	405.15	-241.29	-1954.40	-1919.24	-276.45	242.88
1	114	355	-1938.38	-3353.80	-2089.58	-3202.60	437.20	-145.35	-1863.00	-1749.36	-258.98	426.94
1	114	363	-1799.79	-2956.05	-1958.20	-2797.64	397.58	-22.96	-1688.54	-1483.04	-228.46	547.76
1	114	371	-1598.18	-2295.93	-1716.68	-2177.44	261.99	94.18	-1415.33	-1130.74	-190.41	590.43

Viale Duca Alessandro n. 11 – 43123 Parma
Cell. 335 1403156 – E mail ing.concari@gmail.com
Sito web: studioaire.it – P.IVA 02561480340

1	114	379	-1292.22	-1410.72	-1305.87	-1397.06	37.84	192.04	-1041.63	-708.37	-141.22	547.78
1	114	387	-538.83	-791.11	-695.08	-634.86	-122.49	286.65	-556.57	-227.24	-42.69	411.39
1	114	395	254.35	-1511.82	-1303.83	46.36	-569.28	571.88	-1372.05	-411.07	-389.11	971.90
1	114	403	-469.01	-2267.02	-483.28	-2252.74	-159.58	517.98	-1701.44	-1058.59	-124.87	1006.72
1	114	407	1368.28	289.62	1355.95	301.95	-114.66	210.86	-76.57	150.18	-15.90	117.30
1	114	408	1918.37	194.60	1901.80	211.17	-168.16	194.86	-180.18	24.54	-9.86	186.73
1	114	409	1875.40	183.93	1860.33	199.00	-158.96	213.93	-232.08	-13.56	-4.58	222.96
1	114	410	1759.02	177.39	1744.67	191.74	-149.97	218.51	-255.72	-39.75	2.54	236.17
1	114	411	-40.06	-2982.58	-119.95	-2902.68	-478.24	2097.62	-388.55	-140.25	1849.32	745.43
1	114	415	1674.01	174.15	1659.92	188.25	-144.70	203.11	-261.18	-67.00	8.94	229.02
1	114	416	1634.87	172.77	1620.99	186.66	-141.80	171.64	-250.46	-92.64	13.81	204.23
1	114	417	1633.74	172.11	1620.16	185.68	-140.20	129.65	-226.06	-113.67	17.26	165.37
1	114	418	1658.86	171.61	1645.70	184.77	-139.27	83.06	-192.66	-129.25	19.66	116.03
1	114	419	-148.46	-3487.99	-214.56	-3421.90	-465.15	2351.44	-216.63	-47.90	2182.70	636.28
1	114	423	1699.79	171.09	1687.09	183.79	-138.74	40.74	-159.30	-139.88	21.33	59.22
1	114	424	1747.46	170.62	1735.20	182.89	-138.54	22.57	-146.59	-146.55	22.52	-2.70
1	114	425	1791.60	170.45	1779.63	182.41	-138.75	46.81	-173.48	-150.08	23.41	-67.89
1	114	426	1816.16	170.99	1804.24	182.91	-139.51	97.36	-223.70	-150.45	24.11	-134.73
1	114	427	21.19	-4261.58	-25.68	-4214.71	-445.59	1826.48	-405.96	-309.84	1730.35	453.16
1	114	435	-265.59	-4478.21	-359.06	-4384.74	-620.49	-859.43	-1796.26	-1795.92	-859.77	-17.96
1	114	443	-645.10	-3723.48	-650.12	-3718.46	-124.14	467.33	-788.55	-740.32	419.10	-241.33
1	114	447	1792.63	172.82	1780.26	185.19	-141.00	158.53	-278.43	-144.83	24.93	-201.31
1	114	448	1670.79	176.30	1656.92	190.17	-143.30	226.41	-321.72	-121.81	26.50	-263.84
1	114	449	1366.19	178.82	1347.72	197.28	-146.90	305.00	-323.10	-47.53	29.43	-311.68
1	114	450	748.89	157.57	706.11	200.35	-153.20	416.14	-224.71	160.90	30.53	-313.73
1	114	451	-177.65	-4785.51	-184.26	-4778.90	-174.37	870.01	-545.24	-203.47	528.24	-605.70
1	114	455	245.68	-463.36	-440.30	222.62	-125.78	732.90	-65.41	678.66	-11.17	-200.90
1	114	456	-147.86	-887.04	-828.80	-206.10	-199.14	783.79	-239.39	740.19	-195.79	-206.67
1	114	457	682.71	-306.74	-272.43	648.40	181.03	91.89	6.37	21.98	76.28	-33.03
1	114	458	588.01	-255.25	11.29	321.48	-392.07	14.95	-1.22	7.21	6.52	8.08
1	114	459	373.49	-5516.55	373.16	-5516.21	-44.40	583.03	-1053.48	-319.02	-151.43	-813.96
1	114	467	483.75	-7299.95	483.35	-7299.55	-55.54	-785.40	-3263.36	-1504.09	-2544.67	-1124.45
1	114	475	-600.56	-1317.39	-797.80	-1120.15	320.13	557.89	-1756.95	-180.70	-1018.37	-1078.98
1	114	476	-496.21	-2414.13	-2407.97	-502.38	108.57	1245.59	-1447.77	-380.31	178.13	-1317.41
1	114	477	-1153.07	-3568.47	-3524.49	-1197.05	322.94	894.57	-1421.31	-807.89	281.15	-1021.92
1	114	478	-1726.61	-4284.37	-4201.69	-1809.28	452.36	547.62	-1468.60	-1176.34	255.36	-709.82
1	114	479	-2132.64	-4668.35	-4519.15	-2281.84	596.72	283.61	-1512.36	-1436.11	207.36	-362.11
1	114	480	-2335.81	-4859.93	-4615.33	-2580.41	746.72	153.66	-1576.15	-1576.05	153.56	-13.22
1	114	481	-2358.54	-4900.89	-4557.57	-2701.86	868.89	149.56	-1656.09	-1601.19	94.65	310.05
1	114	482	-2250.07	-4763.82	-4358.40	-2655.49	924.54	225.89	-1716.11	-1519.44	29.23	585.88
1	114	483	-2063.67	-4385.48	-3984.95	-2464.19	877.23	333.98	-1716.88	-1338.88	-44.03	795.20
1	114	484	-1848.36	-3694.12	-3364.60	-2177.87	706.85	435.81	-1632.69	-1070.78	-126.10	920.10
1	114	485	-1638.30	-2661.21	-2408.81	-1890.69	440.99	498.20	-1452.74	-738.32	-216.22	939.89
1	114	486	-1087.55	-1761.66	-1139.84	-1709.37	180.32	460.75	-1168.22	-398.10	-309.37	813.28
1	114	487	30.83	-2241.34	-2163.39	-47.12	413.56	1746.27	-1312.35	1.23	432.70	-1514.02
1	114	488	-460.99	-3414.03	-3320.15	-554.88	518.10	1662.12	-909.98	-20.15	772.29	-1223.49
1	114	489	-935.76	-4074.70	-3969.20	-1041.26	565.71	1409.68	-619.83	-107.59	897.44	-881.60
1	114	490	-1337.72	-4407.64	-4291.61	-1453.76	585.46	1086.37	-391.42	-213.55	908.50	-480.86
1	114	491	-1635.91	-4507.99	-4379.50	-1764.39	593.73	853.73	-310.59	-306.38	849.52	-69.90
1	114	492	-1828.95	-4420.11	-4284.34	-1964.72	577.38	822.04	-453.82	-369.69	737.90	

Viale Duca Alessandro n. 11 – 43123 Parma
Cell. 335 1403156 – E mail ing.concari@gmail.com
Sito web: studioaire.it – P.IVA 02561480340

316.65												
1	114	493	-1939.87	-4144.74	-4017.55	-2067.06	514.06	907.62	-724.65	-397.63	580.59	
653.34												
1	114	494	-2007.35	-3655.14	-3557.93	-2104.56	388.23	989.34	-1001.86	-391.60	379.08	
918.01												
1	114	495	-2077.35	-2920.88	-2865.80	-2132.43	208.40	999.04	-1229.30	-360.08	129.82	
1086.91												
1	114	496	-1913.80	-2221.94	-1915.90	-2219.84	25.35	880.26	-1379.41	-320.44	-178.71	
1127.61												
1	114	497	-742.19	-2426.89	-745.36	-2423.72	-72.98	555.89	-1430.44	-296.60	-577.96	
983.15												
1	114	498	-126.58	-2189.99	-2145.88	-170.69	298.46	1915.39	-1081.16	233.78	600.45	-
1487.01												
1	114	499	-305.33	-3187.23	-3086.37	-406.18	529.61	2100.98	-475.12	442.65	1183.21	-
1233.68												
1	114	500	-616.72	-3772.66	-3666.81	-722.57	568.20	2030.24	-22.71	541.25	1466.29	-
916.37												
1	114	501	-948.05	-4060.10	-3964.87	-1043.28	536.01	1777.16	332.72	559.36	1550.52	-
525.36												
1	114	502	-1252.90	-4116.63	-4036.72	-1332.80	471.63	1510.79	509.88	522.23	1498.44	-
110.49												
1	114	503	-1518.02	-3976.57	-3915.36	-1579.22	383.05	1428.25	364.33	449.34	1343.24	
288.48												
1	114	504	-1752.46	-3649.68	-3611.07	-1791.07	267.89	1468.90	-15.36	352.79	1100.75	
641.02												
1	114	505	-1980.24	-3131.50	-3116.75	-1994.99	129.45	1465.61	-452.55	237.92	775.14	
920.69												
1	114	506	-2229.99	-2422.40	-2421.88	-2230.50	-9.92	1339.48	-875.41	104.54	359.53	
1100.08												
1	114	507	-1525.93	-2548.58	-1536.14	-2538.38	-101.64	1037.88	-1256.52	-50.48	-168.16	
1145.69												
1	114	508	-512.19	-2948.12	-514.52	-2945.79	-75.28	519.57	-1601.61	-225.43	-856.60	
1012.55												
1	114	509	-342.51	-2296.66	-2295.58	-343.58	45.83	1892.01	-827.32	358.14	706.55	-
1348.46												
1	114	510	-422.37	-2968.09	-2913.76	-476.70	367.91	2317.65	-95.49	709.99	1512.17	-
1137.96												
1	114	511	-597.40	-3437.90	-3362.69	-672.61	456.05	2439.26	435.99	929.60	1945.65	-
863.24												
1	114	512	-844.34	-3672.77	-3605.04	-912.06	432.40	2313.78	830.80	1035.87	2108.71	-
511.92												
1	114	513	-1120.81	-3699.89	-3649.92	-1170.78	355.50	2089.82	1029.76	1045.64	2073.94	-
128.80												
1	114	514	-1407.54	-3540.66	-3510.56	-1437.64	251.60	1948.34	912.85	975.40	1885.79	
246.70												
1	114	515	-1703.98	-3206.47	-3194.24	-1716.21	135.01	1890.30	516.39	838.80	1567.88	
582.25												
1	114	516	-2021.60	-2704.49	-2703.80	-2022.29	21.78	1769.92	3.69	645.98	1127.63	
849.65												
1	114	517	-2036.16	-2388.73	-2047.10	-2377.79	-61.13	1505.22	-543.31	404.66	557.25	
1021.42												
1	114	518	-1248.60	-2804.40	-1252.04	-2800.96	-73.12	1055.68	-1101.31	123.16	-168.79	
1068.57												
1	114	519	-382.21	-3295.00	-382.62	-3294.59	34.40	422.30	-1705.94	-183.66	-1099.98	
960.43												
1	114	520	-455.73	-2491.97	-2469.25	-478.45	-213.88	1763.57	-570.31	420.11	773.15	-
1153.51												
1	114	521	446.05	16.88	432.30	30.63	-75.56	216.41	-95.43	188.80	-67.82	
88.59												
1	114	522	-591.61	-2812.67	-2804.81	-599.46	131.85	2398.49	230.40	859.69	1769.20	-
984.05												
1	114	523	-715.50	-3127.41	-3096.81	-746.10	269.94	2706.32	786.49	1156.39	2336.43	-
757.18												
1	114	524	-904.01	-3294.89	-3260.40	-938.50	285.11	2725.32	1171.81	1321.95	2575.18	-
459.03												
1	114	525	-1147.49	-3294.10	-3268.08	-1173.50	234.88	2576.34	1353.27	1366.66	2562.94	-
127.29												
1	114	526	-1432.34	-3128.72	-3114.52	-1446.55	154.59	2388.99	1265.44	1303.22	2351.21	
202.54												
1	114	527	-1754.40	-2806.38	-2801.89	-1758.90	68.61	2205.22	909.27	1144.89	1969.60	
499.84												
1	114	528	-2117.49	-2337.37	-2337.37	-2117.49	-0.27	1949.81	383.96	904.60	1429.16	
737.68												
1	114	529	-1736.96	-2531.41	-1737.76	-2530.60	-25.30	1553.29	-233.88	595.54	723.87	
891.28												
1	114	530	-1037.48	-3001.22	-1037.79	-3000.91	24.64	990.53	-927.29	233.10	-169.87	
937.50												
1	114	531	-288.57	-3527.47	-298.48	-3517.57	178.83	298.85	-1755.42	-161.76	-1294.80	
856.77												
1	114	532	-481.55	-2691.87	-2599.83	-573.59	-441.55	1583.23	-318.21	449.03	815.99	-
932.84												
1	114	533	-710.59	-2732.83	-2726.49	-716.93	-113.10	2404.26	503.12	941.45	1965.93	-
800.74												
1	114	534	-858.14	-2876.80	-2875.23	-859.72	56.39	2886.43	1044.70	1286.00	2645.14	-
621.43												
1	114	535	-1030.32	-2961.91	-2954.94	-1037.29	115.81	3044.14	1396.44	1490.04	2950.55	-
381.38												
1	114	536	-1254.40	-2927.96	-2920.69	-1261.67	110.06	2970.09	1550.59	1559.26	2961.42	-
110.61												
1	114	537	-1531.36	-2758.83	-2754.36	-1535.83	73.93	2754.14	1482.43	1503.22	2733.35	
161.27												
1	114	538	-1859.21	-2454.75	-2452.69	-1861.27	34.95	2449.47	1185.04	1334.17	2300.33	
407.84												
1	114	539	-2021.58	-2241.16	-2022.99	-2239.74	17.58	2050.13	693.29	1066.35	1677.07	
605.82												
1	114	540	-1482.41	-2672.91	-1484.17	-2671.15	45.77	1526.58	50.24	716.03	860.79	
734.61												
1	114	541	-861.34	-3158.25	-870.13	-3149.45	141.88	878.99	-744.08	302.44	-167.54	

Viale Duca Alessandro n. 11 – 43123 Parma
Cell. 335 1403156 – E mail ing.concari@gmail.com
Sito web: studioaire.it – P.IVA 02561480340

776.77													
1	114	542	-202.40	-3688.53	-232.27	-3658.67	321.29	170.57	-1763.29	-151.11	-1441.61		
720.14													
1	114	543	-459.24	-2845.67	-2665.36	-639.55	-630.71	1381.33	-74.63	462.01	844.69	-	
702.38													
1	114	544	-754.17	-2711.98	-2652.02	-814.12	-337.32	2375.31	723.38	986.23	2112.46	-	
604.25													
1	114	545	-961.14	-2702.38	-2688.75	-974.77	-153.45	3013.35	1226.39	1360.13	2879.61	-	
470.21													
1	114	546	-1156.44	-2696.22	-2694.20	-1158.46	-55.68	3288.23	1539.52	1588.67	3239.09	-	
289.00													
1	114	547	-1383.78	-2620.20	-2620.04	-1383.94	-13.97	3274.56	1670.30	1674.61	3270.25	-	
83.05													
1	114	548	-1659.14	-2442.33	-2442.33	-1659.14	0.52	3042.03	1614.19	1625.19	3031.03		
124.82													
1	114	549	-1985.70	-2154.79	-2153.72	-1986.77	13.38	2641.38	1368.78	1451.59	2558.56		
313.90													
1	114	550	-1755.76	-2370.15	-1759.43	-2366.48	47.35	2103.16	936.06	1168.38	1870.83		
466.01													
1	114	551	-1266.59	-2804.14	-1276.38	-2794.35	122.29	1453.29	308.63	793.31	968.61		
565.58													
1	114	552	-708.32	-3286.18	-733.50	-3261.01	253.50	744.60	-559.39	347.36	-162.15		
600.16													
1	114	553	-115.75	-3805.56	-170.91	-3750.40	447.74	52.22	-1744.51	-145.50	-1546.78		
562.28													
1	114	554	-410.95	-2937.44	-2663.79	-684.60	-785.18	1175.71	157.67	468.74	864.64	-	
468.95													
1	114	555	-735.59	-2720.93	-2566.97	-889.55	-530.99	2338.45	890.63	1012.77	2216.31	-	
402.38													
1	114	556	-999.15	-2603.34	-2526.14	-1076.35	-343.34	3103.85	1347.96	1404.96	3046.85	-	
311.19													
1	114	557	-1239.69	-2511.83	-2474.04	-1277.48	-215.98	3465.29	1629.72	1649.16	3445.85	-	
187.88													
1	114	558	-1492.31	-2386.68	-2366.85	-1512.14	-131.69	3493.54	1745.15	1746.46	3492.24	-	
47.79													
1	114	559	-1778.22	-2192.04	-2180.15	-1790.11	-69.12	3250.95	1696.90	1702.53	3245.32		
93.37													
1	114	560	-1904.24	-2115.41	-1904.47	-2115.19	-6.95	2783.54	1488.53	1527.55	2744.52		
221.38													
1	114	561	-1536.46	-2492.67	-1542.22	-2486.91	74.02	2128.14	1118.23	1235.88	2010.49		
324.00													
1	114	562	-1086.60	-2920.48	-1106.36	-2900.72	189.33	1350.16	542.58	845.74	1046.99		
391.05													
1	114	563	-575.45	-3391.38	-619.36	-3347.48	348.88	604.79	-382.07	378.79	-156.08		
414.67													
1	114	564	-29.84	-3894.71	-111.07	-3813.47	554.40	-44.19	-1714.79	-140.94	-1618.05		
390.21													
1	114	565	-345.64	-2969.63	-2601.70	-713.57	-911.08	985.63	367.39	474.47	878.55	-	
233.95													
1	114	566	-677.81	-2734.38	-2466.35	-945.84	-692.38	2312.85	1001.25	1031.76	2282.34	-	
197.69													
1	114	567	-978.87	-2561.43	-2378.61	-1161.69	-505.87	3164.58	1423.17	1435.77	3151.98	-	
147.62													
1	114	568	-1261.52	-2411.19	-2286.66	-1386.04	-357.29	3578.48	1686.67	1690.15	3574.99	-	
81.12													
1	114	569	-1541.84	-2248.28	-2155.29	-1634.83	-238.84	3630.08	1795.21	1795.23	3630.05	-	
6.91													
1	114	570	-1802.62	-2077.81	-1963.06	-1917.38	-135.69	3380.18	1753.03	1755.74	3377.48		
66.30													
1	114	571	-1698.15	-2239.97	-1699.93	-2238.19	-31.01	2871.78	1567.63	1580.94	2858.47		
131.08													
1	114	572	-1358.95	-2604.45	-1365.57	-2597.83	90.53	2134.46	1245.84	1284.63	2095.66		
181.57													
1	114	573	-940.12	-3021.34	-968.29	-2993.17	240.49	1227.56	752.11	884.92	1094.75		
213.32													
1	114	574	-462.93	-3478.31	-523.97	-3417.27	424.66	481.97	-230.60	403.64	-152.28		
222.89													
1	114	575	51.21	-3965.12	-54.04	-3859.88	641.58	-107.31	-1689.72	-135.04	-1661.99		
207.63													
1	114	576	-267.79	-2952.87	-2490.92	-729.75	-1013.40	887.45	481.67	481.71	887.41	4.16	
1	114	577	-602.42	-2736.93	-2351.28	-988.07	-821.25	2312.96	1048.21	1048.29	2312.88		
10.10													
1	114	578	-926.16	-2549.14	-2240.08	-1235.22	-637.25	3197.99	1459.55	1459.77	3197.77		
19.65													
1	114	579	-1232.75	-2376.73	-2123.15	-1486.32	-475.17	3629.40	1719.93	1720.41	3628.93		
29.97													
1	114	580	-1513.07	-2215.24	-1976.26	-1752.05	-332.70	3685.93	1829.89	1830.69	3685.13		
38.41													
1	114	581	-1674.32	-2148.54	-1782.69	-2040.17	-199.11	3428.88	1793.72	1794.85	3427.76		
42.85													
1	114	582	-1528.19	-2360.26	-1532.69	-2355.76	-61.03	2901.05	1619.84	1621.26	2899.63		
42.57													
1	114	583	-1217.37	-2707.05	-1223.29	-2701.14	93.67	2126.66	1320.98	1322.81	2124.83		
38.42													
1	114	584	-824.85	-3108.94	-858.02	-3075.77	273.25	1115.02	911.86	917.05	1109.83		
32.06													
1	114	585	-372.14	-3550.47	-446.45	-3476.16	480.27	426.78	-154.62	425.72	-153.56		
24.81													
1	114	586	122.67	-4021.69	-3.00	-3896.02	710.66	-126.38	-1683.08	-126.54	-1682.92		
16.05													
1	114	587	-184.76	-2901.19	-2348.35	-737.60	-1093.67	1009.38	372.56	491.29	890.65		
248.02													
1	114	588	-530.78	-2720.47	-2226.30	-1024.95	-915.35	2346.16	1024.83	1063.25	2307.75		
222.00													
1	114	589	-870.79	-2542.18	-2105.57	-1307.40	-734.24	3205.55	1456.49	1477.45	3184.59		
190.31													
1	114	590	-1181.91	-2379.83	-1973.74	-1588.00	-567.06	3619.28	1729.00	1740.13	3608.15		
144.62													

Viale Duca Alessandro n. 11 – 43123 Parma
Cell. 335 1403156 – E mail ing.concari@gmail.com
Sito web: studioaire.it – P.IVA 02561480340

1	114	591	-1432.25	-2258.25	-1818.75	-1871.75	-412.15	3661.52	1848.90	1853.14	3657.29	87.54
1	114	592	-1523.41	-2270.31	-1628.69	-2165.03	-259.90	3395.10	1820.26	1820.58	3394.78	22.56
1	114	593	-1385.09	-2482.72	-1394.06	-2473.75	-98.82	2867.15	1648.01	1649.64	2865.51	-44.62
1	114	594	-1105.27	-2806.24	-1109.14	-2802.37	81.08	2109.75	1337.00	1351.89	2094.86	-106.23
1	114	595	-738.77	-3187.47	-772.57	-3153.67	285.70	1186.62	846.16	943.75	1089.03	-153.95
1	114	596	-305.40	-3610.70	-387.71	-3528.39	515.05	496.03	-212.12	446.38	-162.47	-180.82
1	114	597	179.21	-4066.61	37.51	-3924.92	762.58	-93.44	-1703.74	-114.81	-1682.37	-184.29
1	114	598	-113.40	-2828.81	-2196.58	-745.64	-1147.63	1229.47	159.39	503.09	885.77	499.66
1	114	599	-487.67	-2679.86	-2096.58	-1070.95	-968.73	2407.46	930.25	1073.83	2263.88	437.59
1	114	600	-838.13	-2525.29	-1968.73	-1394.69	-793.25	3187.71	1405.61	1482.69	3110.62	362.52
1	114	601	-1131.90	-2401.55	-1827.02	-1706.44	-631.96	3549.60	1702.98	1740.75	3511.83	261.40
1	114	602	-1332.09	-2345.43	-1670.32	-2007.20	-477.85	3556.59	1841.78	1853.32	3545.05	140.20
1	114	603	-1378.85	-2414.12	-1489.48	-2303.48	-319.84	3275.49	1824.27	1824.30	3275.46	5.81
1	114	604	-1258.35	-2618.42	-1274.46	-2602.31	-147.15	2767.02	1643.42	1658.68	2751.75	-130.07
1	114	605	-1015.44	-2911.40	-1016.72	-2910.12	49.30	2088.71	1278.41	1366.37	2000.75	-252.06
1	114	606	-680.12	-3262.84	-709.61	-3233.35	274.39	1341.39	648.34	962.17	1027.56	-344.98
1	114	607	-266.31	-3661.37	-349.96	-3577.71	526.33	652.32	-368.92	465.16	-181.76	-395.10
1	114	608	213.44	-4099.73	60.97	-3947.26	796.47	-5.46	-1752.80	-99.19	-1659.07	-393.69
1	114	609	-85.80	-2746.06	-2062.53	-769.34	-1162.40	1470.49	-87.02	516.70	866.76	758.83
1	114	610	-502.10	-2609.74	-1963.60	-1148.24	-971.77	2477.02	770.47	1073.41	2174.09	652.08
1	114	611	-843.70	-2494.30	-1818.80	-1519.20	-811.59	3139.95	1294.09	1461.44	2972.60	530.00
1	114	612	-1086.60	-2443.11	-1669.20	-1860.51	-671.47	3422.35	1620.48	1703.07	3339.75	376.84
1	114	613	-1220.30	-2471.67	-1517.65	-2174.31	-532.62	3371.65	1786.15	1810.92	3346.87	196.63
1	114	614	-1234.63	-2588.11	-1352.71	-2470.03	-381.93	3065.16	1786.81	1786.83	3065.13	-5.71
1	114	615	-1135.96	-2782.45	-1163.22	-2755.19	-210.08	2598.61	1584.54	1630.84	2552.31	-211.68
1	114	616	-938.83	-3036.40	-938.85	-3036.37	-7.30	2057.95	1129.99	1351.90	1836.05	-395.82
1	114	617	-646.56	-3343.76	-666.80	-3323.52	232.79	1479.18	403.13	964.09	918.22	-537.53
1	114	618	-259.79	-3704.78	-336.24	-3628.33	507.48	840.73	-576.40	480.49	-216.17	-617.03
1	114	619	213.75	-4117.53	57.68	-3961.47	807.23	137.36	-1824.00	-77.41	-1609.22	-612.47
1	114	620	-152.07	-2653.76	-1971.39	-834.44	-1114.20	1707.05	-355.19	531.84	820.01	1021.00
1	114	621	-600.32	-2504.53	-1818.26	-1286.58	-914.24	2518.17	556.19	1050.21	2024.15	851.59
1	114	622	-879.99	-2463.29	-1637.94	-1705.34	-790.93	3045.00	1111.28	1388.35	2767.93	677.50
1	114	623	-1026.09	-2527.19	-1484.66	-2068.63	-691.42	3239.53	1450.93	1593.46	3097.00	484.37
1	114	624	-1088.52	-2648.00	-1348.34	-2388.19	-581.10	3110.46	1644.81	1692.13	3063.15	259.06
1	114	625	-1080.17	-2806.06	-1206.05	-2680.18	-448.78	2756.63	1677.00	1677.07	2756.56	-8.45
1	114	626	-1003.64	-2993.73	-1047.35	-2950.01	-291.70	2359.60	1435.73	1535.30	2260.03	-286.49
1	114	627	-861.90	-3202.36	-865.93	-3198.34	-96.98	1990.39	885.51	1280.21	1595.69	-529.44
1	114	628	-632.74	-3445.10	-640.74	-3437.11	149.75	1566.48	117.09	932.49	751.09	-719.00
1	114	629	-290.38	-3744.77	-348.83	-3686.32	445.51	1029.56	-816.41	490.42	-277.27	-839.38
1	114	630	162.57	-4110.52	14.85	-3962.80	780.63	336.60	-1907.19	-42.45	-1528.14	-840.73
1	114	631	-373.30	-2535.76	-1931.25	-977.80	-970.46	1906.98	-646.52	545.85	714.62	1273.96
1	114	632	-777.23	-2369.89	-1632.45	-1514.67	-794.15	2467.37	301.31	982.03	1786.64	1005.54
1	114	633	-892.51	-2478.84	-1401.79	-1969.56	-740.62	2864.89	856.03	1220.81	2500.11	774.41
1	114	634	-913.95	-2688.19	-1258.35	-2343.79	-701.74	3005.05	1158.73	1359.04	2804.75	574.20
1	114	635	-926.39	-2888.01	-1154.50	-2659.89	-628.84	2783.70	1362.52	1447.18	2699.04	336.37
1	114	636	-907.62	-3079.00	-1039.40	-2947.22	-518.44	2333.90	1451.36	1451.38	2333.89	3.37
1	114	637	-844.15	-3273.34	-909.08	-3208.41	-391.78	2042.99	1147.10	1323.36	1866.74	-356.14
1	114	638	-761.74	-3443.66	-781.52	-3423.88	-229.48	1839.06	546.23	1098.93	1286.36	-639.58
1	114	639	-624.43	-3598.40	-624.45	-3598.38	7.33	1545.77	-197.26	832.58	515.94	-857.01
1	114	640	-355.88	-3792.66	-385.34	-3763.20	316.82	1177.26	-1082.40	490.14	-395.28	-1039.48

Viale Duca Alessandro n. 11 – 43123 Parma
Cell. 335 1403156 – E mail ing.concari@gmail.com
Sito web: studioaire.it – P.IVA 02561480340

1	114	641	38.33	-4056.93	-78.75	-3939.85	682.47	597.52	-1993.65	20.77	-1416.89	-1077.88
1	114	642	-784.15	-2345.84	-1899.26	-1230.73	-705.68	1999.56	-981.81	534.63	483.11	1490.46
1	114	643	-912.55	-2269.11	-1361.24	-1820.42	-638.24	2212.25	15.77	817.61	1410.41	1057.48
1	114	644	-796.17	-2594.29	-1091.21	-2299.24	-665.94	2550.19	532.91	892.08	2191.03	771.71
1	114	645	-719.96	-2952.97	-973.43	-2699.50	-708.34	2744.18	710.09	932.38	2521.88	634.62
1	114	646	-729.19	-3211.97	-936.59	-3004.57	-686.96	2414.86	862.36	1007.63	2269.60	452.14
1	114	647	-722.65	-3403.53	-852.66	-3273.52	-575.89	1753.41	1051.56	1053.79	1751.18	39.50
1	114	648	-640.18	-3626.75	-725.76	-3541.17	-498.26	1633.27	645.16	920.01	1358.42	-442.77
1	114	649	-598.97	-3816.23	-650.57	-3764.63	-404.15	1560.65	117.15	720.01	957.79	-711.89
1	114	650	-581.80	-3893.72	-596.94	-3878.58	-223.42	1307.36	-500.35	593.76	213.25	-883.61
1	114	651	-427.98	-3888.26	-429.77	-3886.47	78.66	1190.50	-1381.68	454.32	-645.49	-1162.60
1	114	652	-171.17	-3903.40	-220.19	-3854.38	424.92	908.36	-2090.66	120.34	-1302.65	-1319.96
1	114	653	-1226.05	-1933.81	-1639.16	-1520.69	-348.89	1812.44	-1448.24	360.72	3.48	1620.53
1	114	654	-799.91	-2219.19	-1054.04	-1965.06	-544.15	1545.35	-320.57	422.37	802.41	913.40
1	114	655	-589.24	-2817.63	-697.67	-2709.21	-479.44	2155.82	65.85	299.09	1922.59	658.07
1	114	656	-419.14	-3306.84	-582.30	-3143.68	-666.74	2522.16	148.15	338.97	2331.34	645.45
1	114	657	-449.68	-3825.73	-689.16	-3586.25	-866.68	2065.32	25.32	234.14	1856.49	618.38
1	114	658	-608.68	-3674.72	-690.92	-3592.48	-495.36	898.20	394.30	440.16	852.34	144.94
1	114	659	-343.56	-3964.96	-481.24	-3827.28	-692.56	1129.69	-274.79	134.50	720.40	-638.22
1	114	660	-385.07	-4310.48	-435.97	-4259.59	-444.06	1199.22	-346.84	109.23	743.15	-705.06
1	114	661	-296.49	-4829.54	-395.30	-4730.73	-661.90	710.05	-748.55	55.71	-94.22	-725.44
1	114	662	-514.49	-3988.66	-535.28	-3967.86	-267.96	874.04	-1787.62	300.92	-1214.50	-1094.07
1	114	663	-209.04	-3721.03	-248.13	-3681.94	-368.45	1136.83	-2295.63	109.57	-1268.37	-1571.87
1	114	664	-78.56	-851.78	-78.66	-851.68	9.02	67.56	-187.81	16.73	-136.98	101.96
1	114	665	350.15	-329.04	-84.35	105.45	326.06	-33.44	-285.24	-283.39	-35.28	21.46
1	114	666	29.73	-1359.70	-187.79	-1142.19	504.89	593.38	-116.66	178.95	297.77	350.02
1	114	667	-169.73	-2550.07	-170.67	-2549.14	-47.23	1668.33	-160.70	-104.81	1612.44	314.81
1	114	668	-203.27	-3667.07	-209.38	-3660.96	145.35	2096.44	-94.78	-70.50	2072.17	229.36
1	114	669	-135.14	-4391.60	-173.03	-4353.70	399.85	1316.08	-134.55	-130.29	1311.82	78.55
1	114	670	-160.13	-4716.49	-188.11	-4688.52	-355.93	408.83	-127.20	408.72	-127.09	-7.68
1	114	671	-35.13	-5184.99	-79.78	-5140.34	477.44	23.36	-122.59	-97.64	-1.59	54.94
1	114	672	-203.11	-5395.13	-206.05	-5392.19	123.52	479.19	-107.58	-43.91	415.52	-182.51
1	114	673	-62.24	-5633.32	-131.27	-5564.29	616.30	96.08	-725.40	-103.96	-525.36	-352.58
1	114	674	-439.90	-3220.63	-488.72	-3171.82	-365.20	462.23	-1847.04	389.84	-1774.64	-402.41
1	114	675	71.11	-2822.25	33.28	-2784.42	328.67	-26.90	-968.67	-58.36	-937.21	-169.24
1	114	676	113.25	-716.16	101.38	-704.28	98.53	441.50	-369.05	-254.07	326.51	-282.80
1	114	677	-32.90	-1385.26	-32.90	-1385.26	-2.01	222.53	-48.65	-24.93	198.81	-76.61
1	114	678	791.52	-25.16	731.71	34.65	-212.77	-51.39	-131.48	-123.24	-59.63	-24.34
1	114	679	116.63	-2553.08	101.68	-2538.12	-199.22	239.71	-61.78	12.65	165.28	-130.00
1	114	680	148.24	-3088.56	134.52	-3074.83	-210.29	164.47	-73.90	27.26	63.31	-117.81
1	114	681	152.57	-3380.96	140.21	-3368.59	-208.65	83.16	-52.43	31.76	-1.03	-65.79
1	114	682	151.31	-3514.53	139.87	-3503.09	-204.49	31.41	-26.74	31.28	-26.60	2.83
1	114	683	148.41	-3510.28	137.45	-3499.32	-199.96	76.39	-74.60	27.19	-25.40	70.77
1	114	684	144.98	-3356.76	133.88	-3345.67	-196.81	132.17	-120.26	20.02	-8.11	125.43
1	114	685	142.14	-3018.17	129.72	-3005.76	-197.67	170.72	-145.30	10.52	14.90	158.00
1	114	686	142.28	-2436.09	125.34	-2419.16	-208.27	182.19	-147.39	0.46	34.34	163.91
1	114	687	152.49	-1545.97	117.69	-1511.16	-240.63	170.74	-120.79	-6.38	56.33	142.36
1	114	688	296.21	-479.08	116.40	-299.27	-327.22	194.18	-46.95	-10.38	157.61	86.49
1	114	689	409.66	173.81	346.42	237.06	-104.48	219.92	-85.75	-61.44	195.61	82.70
1	114	690	-812.96	-1751.57	-1457.23	-1107.31	435.47	263.74	-185.25	125.70	-47.21	-

Viale Duca Alessandro n. 11 – 43123 Parma
Cell. 335 1403156 – E mail ing.concari@gmail.com
Sito web: studioaire.it – P.IVA 02561480340

207.18													
1	114	691	650.99	-603.83	-500.33	547.49	345.19	472.60	16.10	226.79	261.91		
227.57													
1	114	692	-777.27	-2001.16	-1879.23	-899.20	-366.56	808.09	-148.27	727.64	-67.82		
265.45													
1	114	693	797.79	-1933.83	-1761.37	625.33	664.33	1525.92	201.04	1088.25	638.70	-	
623.14													
M_G			**N max**	**N min**	**N 1**	**N 2**	**N 1-2**	**M max**	**M min**	**M 1**	**M 2**	**M 1-**	
2													
				-1.293e+04	-1.238e+04	-1.284e+04	-3973.76		-6029.24	-3027.09	-5444.48	-	
2581.63													
			1.160e+04		1.159e+04	2588.98	4659.62	6008.32		3003.77	6006.97		
2704.60													

2.3 – VERIFICHE SLU

VERIFICHE ELEMENTI IN ACCIAIO

MODELLO 1 SCALA ANTINCENDIO

Trave	Stato	Note	V V/T	V N/M	V stab	Cl.	LamS 22	LamS 33	Snell.	Chi mn	V flst	LamS LT	Chi LT	Rif. cmb
1	ok	s=1,m=12	0.04	0.17		1	0.6	0.2	52.4	0.78	0.15	0.4	0.86	
101,175,0,101														
3	ok	s=3,m=12	0.08	0.38		1	0.6	0.3	48.4	0.86	0.22	0.1	1.00	
158,154,0,154														
6	ok	s=3,m=12	0.11	0.47		1	1.0	0.3	88.8	0.58	0.31	0.3	1.00	
47,167,0,153														
7	ok	s=1,m=12	0.02	0.13		1	0.6	0.2	52.4	0.78	0.05	0.4	0.86	
101,175,0,101														
8	ok	s=1,m=12	8.32e-03	0.11		1	0.6	0.2	52.4	0.78	0.03	0.2	1.00	
162,162,0,182														
9	ok	s=1,m=12	0.02	0.10		1	0.6	0.2	52.4	0.78	0.05	0.4	0.86	
103,173,0,103														
10	ok	s=3,m=12	0.07	0.41		1	0.6	0.3	48.4	0.86	0.21	0.2	1.00	
184,168,0,156														
11	ok	s=1,m=12	0.02	0.14		1	0.6	0.2	52.4	0.78	0.09	0.4	0.86	
47,176,0,182														
12	ok	s=1,m=12	0.04	0.11		1	5.03e-02	0.3	25.9	0.95	0.03	2.17e-02	1.00	
174,162,0,182														
13	ok	s=1,m=12	7.40e-03	0.11		1	0.6	0.3	52.4	0.78	0.03	0.2	0.99	
175,175,0,182														
14	ok	s=1,m=12	0.07	0.13		1	1.4	0.4	119.0	0.36	0.11	1.1	0.40	
168,167,0,161														
15	ok	s=1,m=12	0.09	0.18	0.49	1	1.4	0.4	119.0	0.36	0.34	1.1	0.40	
165,180,182,182														
18	ok	s=1,m=12	0.02	0.18		1	0.6	0.2	52.4	0.78	0.08	0.4	0.86	
101,157,0,183														
19	ok	s=1,m=12	0.03	0.17		1	5.03e-02	0.3	29.5	0.93	0.05	2.27e-02	1.00	
179,174,0,182														
20	ok	s=1,m=12	0.02	0.17		1	0.6	0.2	52.4	0.78	0.05	0.4	0.86	
45,153,0,182														
21	ok	s=3,m=12	0.18	0.24		1	4.65e-02	0.3	29.6	0.97	0.24	1.93e-02	1.00	
164,160,0,156														
22	ok	s=1,m=12	0.03	0.19		1	0.6	0.2	52.4	0.78	0.10	0.4	0.86	
45,154,0,45														
23	ok	s=1,m=12	0.01	0.17		1	0.6	0.3	52.4	0.78	0.05	0.2	1.00	
182,174,0,182														
24	ok	s=1,m=12	0.03	0.23		1	0.6	0.2	52.4	0.78	0.10	0.4	0.86	
45,154,0,45														
25	ok	s=1,m=12	0.01	0.15		1	0.6	0.3	52.4	0.78	0.05	0.2	1.00	
182,176,0,182														
26	ok	s=1,m=12	0.02	0.16	0.34	1	1.8	0.5	152.4	0.24	0.19	1.1	0.42	
101,182,183,182														
27	ok	s=1,m=12	0.03	0.15		1	1.8	0.5	152.4	0.24	0.31	1.1	0.42	
101,47,0,101														
28	ok	s=3,m=12	0.11	0.42		1	0.6	0.3	48.4	0.86	0.28	0.1	1.00	
155,183,0,155														
29	ok	s=3,m=12	0.11	0.41		1	0.6	0.3	48.4	0.86	0.30	0.2	1.00	
179,159,0,155														
30	ok	s=3,m=12	0.19	0.31		1	4.65e-02	0.3	29.6	0.97	0.30	1.97e-02	1.00	
173,155,0,155														
31	ok	s=3,m=12	0.07	0.29		1	4.65e-02	0.3	29.6	0.97	0.22	2.06e-02	1.00	
184,177,0,183														
32	ok	s=1,m=12	0.08	0.35		1	0.6	0.2	52.4	0.78	0.34	0.2	1.00	
45,47,0,45														
33	ok	s=1,m=12	0.05	0.31		1	0.6	0.5	52.4	0.78	0.14	0.2	1.00	
103,182,0,45														
34	ok	s=1,m=12	0.04	0.27		1	0.6	0.2	52.4	0.78	0.11	0.4	0.86	
103,166,0,182														
35	ok	s=3,m=12	0.11	0.38		1	0.6	0.3	48.4	0.86	0.30	0.2	1.00	
181,153,0,153														

Viale Duca Alessandro n. 11 – 43123 Parma
Cell. 335 1403156 – E mail ing.concari@gmail.com
Sito web: studioaire.it – P.IVA 02561480340

36	ok	s=3,m=12	0.16	0.36		1	0.4	0.3	36.3	0.92	0.35	0.2	1.00
162,157,0,153													
37	ok	s=3,m=12	0.11	0.25		1	4.65e-02	0.3	29.6	0.97	0.25	1.96e-02	1.00
182,154,0,154													
38	ok	s=1,m=12	0.03	0.24		1	1.8	0.5	152.4	0.24	0.24	1.1	0.42
101,170,0,103													
39	ok	s=1,m=12	0.05	0.43	0.77	1	1.8	0.5	152.4	0.24	0.80	1.1	0.42
101,162,166,45													
40	ok	s=1,m=12	0.01	0.02		1	0.6	0.2	52.4	0.78	8.38e-03	0.3	0.93
155,176,0,103													
41	ok	s=1,m=12	0.01	0.04		1	0.5	0.3	39.3	0.87	0.03	0.1	1.00
155,173,0,47													
42	ok	s=3,m=12	0.07	0.33		1	4.65e-02	0.3	29.6	0.97	0.17	2.05e-02	1.00
180,176,0,182													
43	ok	s=3,m=12	0.03	0.07		1	0.4	0.1	36.3	0.92	0.02	0.1	1.00
164,175,0,5													
44	ok	s=3,m=12	0.18	0.18		1	1.0	0.1	88.8	0.58	0.03	0.2	1.00
103,165,0,103													
45	ok	s=1,m=12	0.07	0.18		1	0.6	0.2	52.4	0.78	3.97e-03	0.4	0.86
103,165,0,103													
49	ok	s=3,m=12	0.15	0.35		1	4.65e-02	0.3	29.6	0.97	0.35	1.95e-02	1.00
179,155,0,155													
50	ok	s=1,m=12	0.07	0.32		1	1.1	0.5	96.1	0.48	0.35	1.1	0.40
103,182,0,45													
Trave			**V V/T**	**V N/M**	**V stab**		**LamS 22**	**LamS 33**	**Snell.**	**Chi mn**	**V flst**	**LamS LT**	**Chi LT**
										0.24			0.40
			0.19	0.47	0.77		1.76	0.47	152.38		0.80	1.14	

Pilas.	**Stato**	**Note**	**V V/T**	**V N/M**	**V stab**	**Cl.**	**LamS 22**	**LamS 33**	**Snell.**	**Chi mn**	**V flst**	**LamS LT**	**Chi LT**	**Rif. cmb**
2	ok	s=1,m=12	0.31	0.07		1	0.4	9.51e-02	30.6	0.92	0.04	5.50e-02	1.00	
165,164,0,161														
4	ok	s=2,m=12	0.04	0.24		1	0.8	0.5	68.7	0.67	0.20	0.4	1.00	
154,154,0,154														
5	ok	s=1,m=12	0.38	0.16		1	0.4	9.51e-02	30.6	0.92	0.13	5.50e-02	1.00	
165,182,0,182														
16	ok	s=2,m=12	0.04	0.24		1	0.8	0.5	71.4	0.65	0.20	0.4	1.00	
153,153,0,153														
17	ok	s=2,m=12	0.05	0.31		1	0.4	0.2	32.9	0.91	0.17	0.2	1.00	
153,163,0,153														
46	ok	s=2,m=12	0.06	0.18		1	0.4	0.2	32.9	0.91	0.17	0.2	1.00	
155,154,0,155														
47	ok	s=2,m=12	0.04	0.21		1	0.8	0.5	71.4	0.65	0.20	0.4	1.00	
155,168,0,155														
48	ok	s=2,m=12	0.04	0.30		1	0.8	0.5	68.7	0.67	0.20	0.4	1.00	
156,164,0,156														
Pilas.			**V V/T**	**V N/M**	**V stab**		**LamS 22**	**LamS 33**	**Snell.**	**Chi mn**	**V flst**	**LamS LT**	**Chi LT**	
										0.65			1.00	
				0.38	0.31			0.82	0.50	71.44		0.20		0.40

MODELLO 2 VANO ASCENSORE

Trave	Stato	Note	V V/T	V N/M	V stab	Cl.	LamS 22	LamS 33	Snell.	Chi mn	V flst	LamS LT	Chi LT	Rif. cmb
5	ok	s=2,m=12	0.01	0.08		1	0.6	0.4	54.2	0.77	0.03	0.4	1.00	79,48,0,79
6	ok	s=2,m=12	0.02	0.05		1	0.6	0.3	50.2	0.80	0.05	0.3	1.00	68,60,0,68
7	ok	s=2,m=12	0.01	0.06		1	0.4	0.2	32.5	0.91	0.02	0.2	1.00	70,48,0,70
8	ok	s=2,m=12	0.02	0.07		1	0.6	0.3	50.2	0.80	0.05	0.3	1.00	67,59,0,67
9	ok	s=2,m=12	0.03	0.09		1	0.2	0.2	21.7	0.97	0.04	0.1	1.00	69,24,0,69
10	ok	s=2,m=12	9.30e-03	0.08		1	1.2	0.7	100.3	0.46	0.05	0.7	0.93	68,48,0,68
11	ok	s=2,m=12	0.10	0.37		1	1.2	0.7	100.3	0.46	0.22	0.7	0.93	35,47,0,66
18	ok	s=2,m=12	0.06	0.26		1	0.6	0.4	54.2	0.77	0.18	0.3	1.00	79,47,0,79
19	ok	s=2,m=12	0.09	0.19		1	0.6	0.3	50.2	0.80	0.19	0.4	1.00	68,68,0,68
20	ok	s=2,m=12	0.07	0.14		1	0.4	0.2	32.5	0.91	0.14	0.2	1.00	71,71,0,71
21	ok	s=2,m=12	0.07	0.16		1	0.6	0.3	50.2	0.80	0.16	0.4	1.00	67,67,0,67
22	ok	s=2,m=12	0.13	0.31		1	0.2	0.2	21.7	0.97	0.17	0.1	1.00	69,49,0,69
23	ok	s=2,m=12	0.15	0.35		1	1.2	0.7	100.3	0.46	0.25	0.7	0.93	16,48,0,16
Trave			**V V/T**	**V N/M**	**V stab**		**LamS 22**	**LamS 33**	**Snell.**	**Chi mn**	**V flst**	**LamS LT**	**Chi LT**	
										0.46			0.93	
			0.15	0.37			1.16	0.70	100.34		0.25	0.67		

Pilas.	Stato	Note	V V/T	V N/M	V stab	Cl.	LamS 22	LamS 33	Snell.	Chi mn	V flst	LamS LT	Chi LT	Rif. cmb
1	ok	s=2,m=12	7.56e-03	0.06		1	1.6	1.0	140.5	0.28	0.04	0.2	1.00	66,71,0,68
2	ok	s=2,m=12	0.01	0.14		1	1.6	1.0	140.5	0.28	0.09	0.2	1.00	35,24,0,35
3	ok	s=2,m=12	8.17e-03	0.09		1	1.6	1.0	140.5	0.28	0.05	0.2	1.00	67,53,0,67
4	ok	s=2,m=12	0.01	0.07		1	1.6	1.0	140.5	0.28	0.05	0.2	1.00	67,83,0,67
12	ok	s=2,m=12	0.04	0.52	0.34	1	1.6	1.0	140.5	0.28	0.19	0.4	1.00	67,79,78,67
13	ok	s=2,m=12	0.04	0.46	0.30	1	1.6	1.0	140.5	0.28	0.19	0.4	1.00	68,84,79,68
14	ok	s=2,m=12	0.04	0.35	0.29	1	1.6	1.0	140.5	0.28	0.18	0.2	1.00	68,84,81,68
15	ok	s=2,m=12	0.04	0.37	0.31	1	1.6	1.0	140.5	0.28	0.16	0.4	1.00	66,69,74,66
16	ok	s=2,m=12	0.03	0.33	0.31	1	1.6	1.0	140.5	0.28	0.15	0.2	1.00	67,69,69,67

Viale Duca Alessandro n. 11 – 43123 Parma
Cell. 335 1403156 – E mail ing.concari@gmail.com
Sito web: studioaire.it – P.IVA 02561480340

Pilas.	Stato	Note	V V/T	V N/M	V stab	Cl.	LamS 22	LamS 33	Snell.	Chi mn	V flst	LamS LT	Chi LT	Rif. cmb
17	ok	s=2,m=12	0.03	0.33	0.26	1	1.6	1.0	140.5	0.28	0.16	0.4	1.00	67,83,76,67
24	ok	s=2,m=12	0.02	0.14		1	1.6	1.0	140.5	0.28	0.10	0.2	1.00	16,48,0,16
25	ok	s=2,m=12	9.44e-03	0.09		1	1.6	1.0	140.5	0.28	0.05	0.2	1.00	67,84,0,68
Pilas.			**V V/T**	**V N/M**	**V stab**		**LamS 22**	**LamS 33**	**Snell.**	**Chi mn**	**V flst**	**LamS LT**	**Chi LT**	
										0.28			1.00	
			0.04	0.52	0.34		1.62	0.97	140.47		0.19	0.36		

VERIFICHE ELEMENTI IN C.A.

MODELLO 2 SCALA ANTINCENDIO

Macro Guscio	Spessore	Id Materiale	Id Criterio	Progettazione
	cm			
1	30.00	1	2	Singolo elemento

Nodo	Stato	x/d	V N/M	ver. rid	Af pr-	Af pr+	Af sec-	Af sec+	N x daN/cm	N y daN/cm	N xy daN/cm	M x daN	M y daN	M xy daN
2	ok	0.13	0.5	2.44e-03	5.7	5.7	5.7	5.7	-1.1	1.4	0.2	-2006.0	-1683.0	-335.9
6	ok	0.13	0.7	2.50e-03	5.7	5.7	5.7	5.7	-6.1	-3.1	0.7	-2718.7	-1196.0	929.9
7	ok	0.13	0.2	4.76e-03	5.7	5.7	5.7	5.7	3.2	13.7	-0.2	616.7	537.9	-91.8
8	ok	0.13	0.2	2.81e-03	5.7	5.7	5.7	5.7	-3.3	3.1	-0.6	287.3	535.3	-502.8
32	ok	0.13	0.7	2.26e-03	5.7	5.7	5.7	5.7	-4.5	-1.9	-0.4	-3201.7	-928.3	-574.0
33	ok	0.13	0.8	1.93e-03	5.7	5.7	5.7	5.7	-5.6	-4.3	1.0	-2871.2	-2374.4	1277.0
39	ok	0.13	0.2	2.62e-03	5.7	5.7	5.7	5.7	1.3	-1.2	3.0	511.4	305.1	354.2
40	ok	0.13	0.2	2.51e-03	5.7	5.7	5.7	5.7	-1.0	-8.4	-0.6	71.6	627.9	-353.3
41	ok	0.13	0.1	2.50e-03	5.7	5.7	5.7	5.7	-0.4	-8.5	1.0	91.1	661.6	-360.5
42	ok	0.13	0.2	2.62e-03	5.7	5.7	5.7	5.7	-0.7	-4.7	1.4	-395.1	-283.6	505.6
43	ok	0.13	0.3	1.81e-03	5.7	5.7	5.7	5.7	-1.7	1.8	0.7	-1169.4	-1466.5	-322.7
44	ok	0.13	0.2	1.79e-03	5.7	5.7	5.7	5.7	0.9	2.0	-0.3	152.8	-940.6	-203.8
45	ok	0.13	5.73e-02	1.02e-03	5.7	5.7	5.7	5.7	0.2	1.5	0.6	-50.3	-171.3	161.1
46	ok	0.13	6.10e-02	9.86e-04	5.7	5.7	5.7	5.7	0.3	-0.7	0.5	-46.5	-190.0	151.2
47	ok	0.13	0.1	1.71e-03	5.7	5.7	5.7	5.7	0.7	1.4	1.5	550.8	90.9	240.1
48	ok	0.13	0.3	1.79e-03	5.7	5.7	5.7	5.7	-1.6	1.4	0.6	-1351.9	-932.5	-240.1
49	ok	0.13	0.2	2.55e-03	5.7	5.7	5.7	5.7	-0.2	-1.8	-1.0	534.4	468.1	-329.5
50	ok	0.13	0.2	2.46e-03	5.7	5.7	5.7	5.7	-0.3	-2.0	0.6	73.5	843.0	425.7
51	ok	0.13	0.2	2.37e-03	5.7	5.7	5.7	5.7	0.4	-0.6	1.2	87.8	777.2	631.3
52	ok	0.13	0.2	2.37e-03	5.7	5.7	5.7	5.7	-0.3	-2.1	-1.8	-402.3	-719.4	-457.4
53	ok	0.13	0.4	1.67e-03	5.7	5.7	5.7	5.7	-1.7	2.3	-0.9	-1156.9	-1786.1	328.1
54	ok	0.13	0.3	1.85e-03	5.7	5.7	5.7	5.7	0.9	2.7	0.7	107.1	-1171.0	346.9
55	ok	0.13	8.85e-02	1.04e-03	5.7	5.7	5.7	5.7	-0.2	-1.4	0.4	8.5	185.1	80.0
56	ok	0.13	0.1	1.52e-03	5.7	5.7	5.7	5.7	0.4	-0.9	-1.0	585.1	-38.4	-183.1
57	ok	0.13	0.1	1.90e-03	5.7	5.7	5.7	5.7	3.5	-0.2	-1.5	589.0	-84.0	-165.9
58	ok	0.13	0.3	1.92e-03	5.7	5.7	5.7	5.7	-0.8	-2.9	-3.3	1168.5	-257.2	241.1
59	ok	0.13	0.2	2.49e-03	5.7	5.7	5.7	5.7	-0.5	-3.4	5.0	505.1	384.5	-222.0
60	ok	0.13	0.1	2.91e-03	5.7	5.7	5.7	5.7	-0.1	-2.9	-0.8	430.1	509.1	-277.4
61	ok	0.13	0.2	2.79e-03	5.7	5.7	5.7	5.7	0.6	0.9	-0.4	449.9	336.8	-359.1
62	ok	0.13	0.2	2.58e-03	5.7	5.7	5.7	5.7	3.4	-3.8	0.1	608.8	-215.1	-290.8
63	ok	0.13	0.3	2.28e-03	5.7	5.7	5.7	5.7	5.6	-0.1	-1.0	1251.8	-133.6	-168.2
64	ok	0.13	0.2	1.50e-03	5.7	5.7	5.7	5.7	-1.6	-1.5	1.7	735.4	-16.1	103.4
65	ok	0.13	0.2	1.90e-03	5.7	5.7	5.7	5.7	-1.1	-3.4	1.5	778.1	-255.1	213.2
66	ok	0.13	0.1	1.54e-03	5.7	5.7	5.7	5.7	-0.5	-0.6	0.5	601.6	-55.3	198.2

Viale Duca Alessandro n. 11 – 43123 Parma
Cell. 335 1403156 – E mail ing.concari@gmail.com
Sito web: studioaire.it – P.IVA 02561480340

67	ok	0.13	0.2	1.89e-03	5.7	5.7	5.7	5.7	1.9	-0.2	0.2	658.8	181.6		251.7
68	ok	0.13	0.3	2.28e-03	5.7	5.7	5.7	5.7	3.1	0.2	-1.2	1556.1	442.4		320.9
69	ok	0.13	0.2	2.59e-03	5.7	5.7	5.7	5.7	-0.7	-0.2	-4.7	602.1	381.6		345.6
70	ok	0.13	0.2	2.76e-03	5.7	5.7	5.7	5.7	3.4	1.4	-1.7	439.0	530.4		473.8
71	ok	0.13	0.2	2.47e-03	5.7	5.7	5.7	5.7	0.5	0.2	0.7	480.8	371.7		576.4
72	ok	0.13	0.1	1.56e-03	5.7	5.7	5.7	5.7	-1.6	-1.5	-1.7	645.7	-12.4	-26.3	
73	ok	0.13	0.2	1.86e-03	5.7	5.7	5.7	5.7	2.1	1.8	-0.3	593.7	-499.5	-	114.9
74	ok	0.13	0.3	2.26e-03	5.7	5.7	5.7	5.7	5.4	-0.5	-1.6	1315.9	-239.0		395.2
75	ok	0.13	0.2	2.38e-03	5.7	5.7	5.7	5.7	0.2	-3.4	1.9	658.8	-336.0		541.3
76	ok	0.13	0.2	1.65e-03	5.7	5.7	5.7	5.7	1.8	-0.6	0.9	-338.6	-485.4		295.6
77	ok	0.13	0.2	1.86e-03	5.7	5.7	5.7	5.7	0.4	-0.8	0.3	552.8	-324.1		633.8
78	ok	0.13	0.2	2.32e-03	5.7	5.7	5.7	5.7	-0.6	0.8	-1.8	253.7	450.4		555.9
79	ok	0.13	0.3	2.37e-03	5.7	5.7	5.7	5.7	0.2	-0.6	-0.4	549.2	253.6	-	545.0
80	ok	0.13	0.2	2.26e-03	5.7	5.7	5.7	5.7	-0.4	1.6	0.6	393.0	616.0		543.3
81	ok	0.13	0.2	2.54e-03	5.7	5.7	5.7	5.7	-0.4	-0.4	0.5	499.4	710.1		546.4
82	ok	0.13	0.2	2.23e-03	5.7	5.7	5.7	5.7	0.4	-0.6	1.9	390.6	554.2		712.5
83	ok	0.13	0.2	2.41e-03	5.7	5.7	5.7	5.7	0.4	-0.3	0.6	408.9	641.9		673.6
84	ok	0.13	0.3	2.37e-03	5.7	5.7	5.7	5.7	1.1	-4.0	1.3	-494.2	-801.1		956.1
85	ok	0.13	0.4	2.22e-03	5.7	5.7	5.7	5.7	-1.1	4.2	-1.4	690.1	1318.1	-	800.4
86	ok	0.13	0.2	1.98e-03	5.7	5.7	5.7	5.7	2.6	0.2	-1.6	-350.7	-346.8	-	277.4
87	ok	0.13	0.3	1.95e-03	5.7	5.7	5.7	5.7	0.4	1.5	-7.03e-02	244.7	-1146.7	-	203.2
88	ok	0.13	0.1	1.90e-03	5.7	5.7	5.7	5.7	3.2	-3.6	-1.9	505.9	-131.2		142.1
89	ok	0.13	0.1	2.01e-03	5.7	5.7	5.7	5.7	0.6	-0.5	0.6	495.6	111.2		222.7
90	ok	0.13	0.1	3.18e-03	5.7	5.7	5.7	5.7	-2.9	11.0	-2.3	364.4	411.1		204.1
91	ok	0.13	0.1	3.40e-03	5.7	5.7	5.7	5.7	-1.4	9.1	-2.6	353.0	393.3		298.8
92	ok	0.13	0.2	3.71e-03	5.7	5.7	5.7	5.7	2.4	-13.4	-2.2	543.1	600.8	-	246.3
93	ok	0.13	0.2	3.89e-03	5.7	5.7	5.7	5.7	2.4	-14.0	-1.2	525.0	585.5	-	235.9
94	ok	0.13	0.2	2.93e-03	5.7	5.7	5.7	5.7	1.5	-7.1	1.5	529.6	188.0		458.8
95	ok	0.13	0.2	2.92e-03	5.7	5.7	5.7	5.7	1.0	-6.1	1.4	546.5	176.6		485.2
96	ok	0.13	0.2	2.78e-03	5.7	5.7	5.7	5.7	2.9	-2.8	-0.3	676.7	-206.7		376.8
97	ok	0.13	0.2	2.77e-03	5.7	5.7	5.7	5.7	3.3	-2.7	-0.2	736.9	-147.8		414.6
98	ok	0.13	0.2	2.02e-03	5.7	5.7	5.7	5.7	-1.4	-4.4	0.8	1035.2	-225.3	91.2	
99	ok	0.13	0.2	2.01e-03	5.7	5.7	5.7	5.7	-1.1	-2.9	1.2	1025.9	-235.8	96.2	
100	ok	0.13	0.2	1.93e-03	5.7	5.7	5.7	5.7	0.7	-2.6	-1.0	487.0	-486.1	-	663.7
101	ok	0.13	0.1	1.69e-03	5.7	5.7	5.7	5.7	4.0	2.5	-2.1	342.0	-258.8	-	398.7
102	ok	0.13	0.2	2.83e-03	5.7	5.7	5.7	5.7	-1.1	2.7	-0.4	375.0	488.2	-	327.6
103	ok	0.13	0.1	2.68e-03	5.7	5.7	5.7	5.7	-0.9	5.6	1.8	419.7	516.8	-	247.5
104	ok	0.13	0.2	2.82e-03	5.7	5.7	5.7	5.7	0.9	3.7	-0.4	385.2	528.4	-	499.8
105	ok	0.13	0.2	2.64e-03	5.7	5.7	5.7	5.7	0.8	3.4	-0.3	400.3	475.4	-	480.8
106	ok	0.13	0.3	2.62e-03	5.7	5.7	5.7	5.7	-2.0	-2.3	1.4	577.3	731.1		826.9
107	ok	0.13	0.2	2.63e-03	5.7	5.7	5.7	5.7	-1.9	-1.9	0.6	428.5	613.7		623.1
108	ok	0.13	0.2	2.04e-03	5.7	5.7	5.7	5.7	1.8	3.2	-0.8	779.4	263.6		297.4
109	ok	0.13	0.2	1.82e-03	5.7	5.7	5.7	5.7	4.1	-0.2	1.7	292.9	-146.8		198.5
110	ok	0.13	0.2	1.25e-03	5.7	5.7	5.7	5.7	-0.2	-0.5	-1.3	756.1	85.8	-	141.8
111	ok	0.13	0.1	1.61e-03	5.7	5.7	5.7	5.7	0.7	2.2	-0.4	247.1	-666.7		149.8
112	ok	0.13	0.1	1.38e-03	5.7	5.7	5.7	5.7	-0.5	-0.5	-0.8	416.3	-106.0	-	188.2
113	ok	0.13	0.2	1.32e-03	5.7	5.7	5.7	5.7	-0.7	-0.4	1.0	789.3	62.1		152.9
114	ok	0.13	0.1	1.33e-03	5.7	5.7	5.7	5.7	-0.8	-0.5	1.1	570.3	18.1	83.4	

Viale Duca Alessandro n. 11 – 43123 Parma
Cell. 335 1403156 – E mail ing.concari@gmail.com
Sito web: studioaire.it – P.IVA 02561480340

115	ok	0.13	0.7	1.99e-03	5.7	5.7	5.7	5.7	-4.5	-1.5	-0.3	-3071.4	-839.8	-
406.5														
116	ok	0.13	0.2	1.36e-03	5.7	5.7	5.7	5.7	-0.6	-0.3	0.9	814.6	75.3	
220.9														
117	ok	0.13	0.1	1.43e-03	5.7	5.7	5.7	5.7	0.2	-0.8	-1.0	472.1	4.1	-
140.6														
118	ok	0.13	0.1	1.44e-03	5.7	5.7	5.7	5.7	3.4	-0.6	0.6	475.8	20.0	
153.2														
119	ok	0.13	0.2	1.29e-03	5.7	5.7	5.7	5.7	-7.93e-02	-0.3	-1.2	784.1	64.7	-
207.8														
120	ok	0.13	0.3	1.73e-03	5.7	5.7	5.7	5.7	-2.6	2.3	1.3	-1338.8	-1120.5	-
291.1														
121	ok	0.13	0.2	5.06e-03	5.7	5.7	5.7	5.7	3.4	14.6	-0.7	657.0	549.9	-96.0
122	ok	0.13	0.6	1.95e-03	5.7	5.7	5.7	5.7	-5.5	-4.4	0.5	-2373.0	-1541.4	
1092.2														
123	ok	0.13	0.2	2.48e-03	5.7	5.7	5.7	5.7	-1.0	-5.5	-0.9	1035.6	-344.9	
162.7														
124	ok	0.13	0.2	2.49e-03	5.7	5.7	5.7	5.7	-0.3	-2.2	-0.6	1035.1	-345.6	
146.2														
125	ok	0.13	5.95e-02	9.17e-04	5.7	5.7	5.7	5.7	-0.1	-1.6	0.7	-60.6	135.3	
223.5														
126	ok	0.13	0.1	1.41e-03	5.7	5.7	5.7	5.7	-0.5	-0.3	-0.7	423.5	65.0	-
212.4														
127	ok	0.13	0.2	1.41e-03	5.7	5.7	5.7	5.7	-2.2	-2.8	-0.5	969.7	-61.6	56.5
128	ok	0.13	0.1	1.34e-03	5.7	5.7	5.7	5.7	-0.7	-0.5	0.9	579.3	-6.7	
125.4														
129	ok	0.13	0.2	1.39e-03	5.7	5.7	5.7	5.7	-2.2	-2.8	0.5	976.5	-62.1	35.3
130	ok	0.13	0.5	2.08e-03	5.7	5.7	5.7	5.7	-8.6	-2.8	1.1	-2277.7	-714.6	
473.8														
131	ok	0.13	0.2	3.01e-03	5.7	5.7	5.7	5.7	1.6	-3.2	2.7	451.7	647.0	
640.6														
132	ok	0.13	0.7	2.06e-03	5.7	5.7	5.7	5.7	-8.0	-3.5	1.0	-3155.1	-660.9	
502.4														

Nodo	x/d	V N/M	ver. rid	Af pr-	Af pr+	Af sec-	Af sec+	N x	N y	N xy	M x	M y	M xy
								-8.56	-13.99	-4.69	-3201.69	-2374.36	-
800.43													
	0.13	0.76	5.06e-03	5.65	5.65	5.65	5.65	5.60	14.55	5.01	1556.06	1318.10	
1276.97													

Nodo	Stato	Max tau	Ver V pr	Ver V sec	Af V pr	Af V sec	V pr	V sec	
			daN/cm2					daN/cm	daN/cm
	2	ok	1.78						
	6	ok	1.58						
	7	ok	0.74						
	8	ok	1.09						
	32	ok	1.43						
	33	ok	2.41						
	39	ok	1.58						
	40	ok	0.70						
	41	ok	0.90						
	42	ok	1.78						
	43	ok	1.78						
	44	ok	1.33						
	45	ok	0.38						
	46	ok	0.36						
	47	ok	1.15						
	48	ok	1.43						
	49	ok	1.43						
	50	ok	0.75						
	51	ok	1.06						
	52	ok	2.01						
	53	ok	2.01						
	54	ok	1.61						
	55	ok	0.44						
	56	ok	0.45						
	57	ok	0.81						
	58	ok	0.81						
	59	ok	0.78						
	60	ok	0.43						
	61	ok	0.36						
	62	ok	0.80						
	63	ok	0.84						
	64	ok	0.32						
	65	ok	0.84						
	66	ok	0.43						
	67	ok	0.77						
	68	ok	0.77						
	69	ok	0.76						
	70	ok	0.33						
	71	ok	0.41						
	72	ok	0.49						
	73	ok	1.05						
	74	ok	1.05						
	75	ok	0.90						
	76	ok	1.00						
	77	ok	1.15						
	78	ok	0.76						
	79	ok	1.43						
	80	ok	0.55						
	81	ok	0.75						

Viale Duca Alessandro n. 11 – 43123 Parma
Cell. 335 1403156 – E mail ing.concari@gmail.com
Sito web: studioaire.it – P.IVA 02561480340

82	ok	0.53
83	ok	1.06
84	ok	1.80
85	ok	2.01
86	ok	2.41
87	ok	2.41
88	ok	0.45
89	ok	0.45
90	ok	0.74
91	ok	0.74
92	ok	0.70
93	ok	0.70
94	ok	0.25
95	ok	0.26
96	ok	0.28
97	ok	0.34
98	ok	0.30
99	ok	0.33
100	ok	1.21
101	ok	1.19
102	ok	0.75
103	ok	0.75
104	ok	0.90
105	ok	0.36
106	ok	1.78
107	ok	1.51
108	ok	1.53
109	ok	1.53
110	ok	0.38
111	ok	1.21
112	ok	0.44
113	ok	0.37
114	ok	0.38
115	ok	1.00
116	ok	0.37
117	ok	0.45
118	ok	0.45
119	ok	0.33
120	ok	1.58
121	ok	0.74
122	ok	2.41
123	ok	0.34
124	ok	0.30
125	ok	0.38
126	ok	0.49
127	ok	0.31
128	ok	0.34
129	ok	0.22
130	ok	1.53
131	ok	1.58
132	ok	1.19

Nodo	**Max tau**	**Ver V pr**	**Ver V sec**	**Af V pr**	**Af V sec**	**V pr**	**V sec**
	2.41						

MODELLO 1 VANO ASCENSORE

							M_T= 1	**Z=330.0**	**P=2**	**P=4**			
Trave	Note	Pos.	%Af	Af inf.	Af. sup	Af long.	x/d	V N/M	V V/T cls	V V/T acc	Staffe	Rif. cmb	
		cm									L=cm		
1	ok,ok	0.0	0.64	4.0	4.0	0.0	0.19	0.08	0.06	0.02	2d8/17 L=54	59,90,59	
	s=1,m=1	27.0	0.64	4.0	4.0	0.0	0.19	0.06	0.06	0.02	2d8/17 L=54	59,90,59	
		54.0	0.64	4.0	4.0	0.0	0.19	0.07	0.07	0.03	2d8/17 L=54	86,90,59	
11	ok,ok	0.0	0.64	4.0	4.0	0.0	0.19	0.05	0.06	0.02	2d8/17 L=54	86,65,86	
	s=1,m=1	27.0	0.64	4.0	4.0	0.0	0.19	0.04	0.06	0.02	2d8/17 L=54	59,65,86	
		54.0	0.64	4.0	4.0	0.0	0.19	0.04	0.06	0.02	2d8/17 L=54	59,81,87	
17	ok,ok	0.0	0.64	4.0	4.0	0.0	0.19	0.04	0.04	8.51e-03	2d8/17 L=54	59,69,68	
	s=1,m=1	27.0	0.64	4.0	4.0	0.0	0.19	0.04	0.05	7.71e-03	2d8/17 L=54	59,69,65	
		54.0	0.64	4.0	4.0	0.0	0.19	0.04	0.05	0.01	2d8/17 L=54	59,69,65	
22	ok,ok	0.0	0.64	4.0	4.0	0.0	0.19	0.03	0.04	0.01	2d8/17 L=54	59,69,57	
	s=1,m=1	27.0	0.64	4.0	4.0	0.0	0.19	0.02	0.04	6.46e-03	2d8/17 L=54	59,65,57	
		54.0	0.64	4.0	4.0	0.0	0.19	0.02	0.04	0.01	2d8/17 L=54	59,65,28	
7	ok,ok	0.0	0.64	4.0	4.0	0.0	0.19	6.05e-03	0.03	5.48e-03	2d8/17 L=54	59,69,59	
	s=1,m=1	27.0	0.64	4.0	4.0	0.0	0.19	9.01e-03	0.03	2.37e-03	2d8/17 L=54	59,69,67	
		54.0	0.64	4.0	4.0	0.0	0.19	7.09e-03	0.03	6.28e-03	2d8/17 L=54	59,77,26	
							M_T= 2	**Z=330.0**	**P=1**	**P=2**			
Trave	Note	Pos.	%Af	Af inf.	Af. sup	Af long.	x/d	V N/M	V V/T cls	V V/T acc	Staffe	Rif. cmb	
2	ok,ok	0.0	0.64	4.0	4.0	0.0	0.19	0.09	0.11	0.03	2d8/17 L=50	68,86,19	
	s=1,m=1	25.0	0.64	4.0	4.0	0.0	0.19	0.08	0.12	0.02	2d8/17 L=50	68,84,60	
		50.0	0.64	4.0	4.0	0.0	0.19	0.11	0.14	0.07	2d8/17 L=50	68,84,44	
8	ok,ok	0.0	0.64	4.0	4.0	0.0	0.19	0.08	0.17	0.05	2d8/17 L=50	68,84,20	
	s=1,m=1	25.0	0.64	4.0	4.0	0.0	0.19	0.06	0.14	0.02	2d8/17 L=50	68,84,68	
		50.0	0.64	4.0	4.0	0.0	0.19	0.05	0.16	0.04	2d8/17 L=50	68,90,43	
15	ok,ok	0.0	0.64	4.0	4.0	0.0	0.19	0.03	0.12	0.05	2d8/17 L=50	68,86,44	
	s=1,m=1	25.0	0.64	4.0	4.0	0.0	0.19	0.04	0.10	2.47e-03	2d8/17 L=50	68,86,70	
		50.0	0.64	4.0	4.0	0.0	0.19	0.04	0.12	0.04	2d8/17 L=50	68,86,19	

Viale Duca Alessandro n. 11 – 43123 Parma
Cell. 335 1403156 – E mail ing.concari@gmail.com
Sito web: studioaire.it – P.IVA 02561480340

20	ok,ok	0.0	0.64	4.0	4.0	0.0	0.19	0.02	0.10	0.04	2d8/17 L=50	59,86,44	
	s=1,m=1	25.0	0.64	4.0	4.0	0.0	0.19	0.03	0.07	4.64e-04	2d8/17 L=50	60,86,79	
		50.0	0.64	4.0	4.0	0.0	0.19	0.02	0.10	0.04	2d8/17 L=50	59,86,19	
25	ok,ok	0.0	0.64	4.0	4.0	0.0	0.19	0.02	0.05	0.04	2d8/17 L=50	63,43,20	
	s=1,m=1	25.0	0.64	4.0	4.0	0.0	0.19	0.03	0.02	4.94e-04	2d8/17 L=50	59,86,20	
		50.0	0.64	4.0	4.0	0.0	0.19	0.02	0.05	0.04	2d8/17 L=50	63,43,43	
28	ok,ok	0.0	0.64	4.0	4.0	0.0	0.19	0.02	0.05	0.02	2d8/17 L=50	63,96,20	
	s=1,m=1	25.0	0.64	4.0	4.0	0.0	0.19	0.02	0.03	3.04e-04	2d8/17 L=50	59,96,20	
		50.0	0.64	4.0	4.0	0.0	0.19	0.02	0.05	0.02	2d8/17 L=50	63,96,43	
30	ok,ok	0.0	0.64	4.0	4.0	0.0	0.19	0.02	0.08	0.02	2d8/17 L=50	63,96,20	
	s=1,m=1	25.0	0.64	4.0	4.0	0.0	0.19	0.02	0.07	1.56e-04	2d8/17 L=50	59,96,32	
		50.0	0.64	4.0	4.0	0.0	0.19	0.02	0.08	0.02	2d8/17 L=50	63,96,43	
32	ok,ok	0.0	0.64	4.0	4.0	0.0	0.19	0.02	0.11	0.02	2d8/17 L=50	70,96,20	
	s=1,m=1	25.0	0.64	4.0	4.0	0.0	0.19	0.03	0.10	2.42e-03	2d8/17 L=50	70,96,68	
		50.0	0.64	4.0	4.0	0.0	0.19	0.02	0.12	0.02	2d8/17 L=50	70,96,43	
34	ok,ok	0.0	0.64	4.0	4.0	0.0	0.19	0.05	0.13	0.03	2d8/17 L=50	70,96,71	
	s=1,m=1	25.0	0.64	4.0	4.0	0.0	0.19	0.06	0.12	0.02	2d8/17 L=50	70,90,70	
		50.0	0.64	4.0	4.0	0.0	0.19	0.08	0.14	0.03	2d8/17 L=50	70,90,70	
36	ok,ok	0.0	0.64	4.0	4.0	0.0	0.19	0.10	0.14	0.05	2d8/17 L=50	70,96,59	
	s=1,m=1	25.0	0.64	4.0	4.0	0.0	0.19	0.08	0.12	0.02	2d8/17 L=50	70,96,59	
		50.0	0.64	4.0	4.0	0.0	0.19	0.08	0.11	0.02	2d8/17 L=50	70,96,28	
							M_T= 3	**Z=330.0**	**P=3**	**P=6**			
Trave	Note	Pos.	%Af	Af inf.	Af. sup	Af long.	x/d	V N/M	V V/T cls	V V/T acc	Staffe	Rif. cmb	
3	ok,ok	0.0	0.64	4.0	4.0	0.0	0.19	0.03	0.08	9.52e-03	2d8/17 L=54	60,69,81	
	s=1,m=1	27.0	0.64	4.0	4.0	0.0	0.19	0.02	0.08	0.01	2d8/17 L=54	60,69,60	
		54.0	0.64	4.0	4.0	0.0	0.19	0.02	0.08	0.02	2d8/17 L=54	63,69,60	
12	ok,ok	0.0	0.64	4.0	4.0	0.0	0.19	0.02	0.03	0.02	2d8/17 L=54	93,68,85	
	s=1,m=1	27.0	0.64	4.0	4.0	0.0	0.19	0.01	0.03	0.02	2d8/17 L=54	59,89,85	
		54.0	0.64	4.0	4.0	0.0	0.19	0.02	0.04	0.02	2d8/17 L=54	59,89,85	
9	ok,ok	0.0	0.64	4.0	4.0	0.0	0.19	0.04	0.04	0.02	2d8/17 L=54	93,69,27	
	s=1,m=1	27.0	0.64	4.0	4.0	0.0	0.19	0.03	0.04	0.01	2d8/17 L=54	89,69,93	
		54.0	0.64	4.0	4.0	0.0	0.19	0.03	0.03	7.49e-03	2d8/17 L=54	93,69,93	
							M_T= 4	**Z=330.0**	**P=3**	**P=4**			
Trave	Note	Pos.	%Af	Af inf.	Af. sup	Af long.	x/d	V N/M	V V/T cls	V V/T acc	Staffe	Rif. cmb	
4	ok,ok	0.0	0.64	4.0	4.0	0.0	0.19	0.08	0.06	0.02	2d8/17 L=50	44,92,65	
	s=1,m=1	25.0	0.64	4.0	4.0	0.0	0.19	0.09	0.07	0.02	2d8/17 L=50	71,92,68	
		50.0	0.64	4.0	4.0	0.0	0.19	0.11	0.08	0.04	2d8/17 L=50	68,92,60	
10	ok,ok	0.0	0.64	4.0	4.0	0.0	0.19	0.09	0.04	0.03	2d8/17 L=50	76,76,68	
	s=1,m=1	25.0	0.64	4.0	4.0	0.0	0.19	0.07	0.03	0.02	2d8/17 L=50	76,76,68	
		50.0	0.64	4.0	4.0	0.0	0.19	0.06	0.03	0.02	2d8/17 L=50	20,73,65	
16	ok,ok	0.0	0.64	4.0	4.0	0.0	0.19	0.04	0.03	0.02	2d8/17 L=50	43,74,44	
	s=1,m=1	25.0	0.64	4.0	4.0	0.0	0.19	0.05	0.02	2.74e-03	2d8/17 L=50	19,74,70	
		50.0	0.64	4.0	4.0	0.0	0.19	0.04	0.03	0.02	2d8/17 L=50	19,19,19	
21	ok,ok	0.0	0.64	4.0	4.0	0.0	0.19	0.05	0.04	0.03	2d8/17 L=50	69,20,68	
	s=1,m=1	25.0	0.64	4.0	4.0	0.0	0.19	0.05	0.03	0.01	2d8/17 L=50	65,77,68	
		50.0	0.64	4.0	4.0	0.0	0.19	0.06	0.04	0.02	2d8/17 L=50	65,77,65	
26	ok,ok	0.0	0.64	4.0	4.0	0.0	0.19	0.06	0.07	0.02	2d8/17 L=50	70,27,19	
	s=1,m=1	25.0	0.64	4.0	4.0	0.0	0.19	0.05	0.05	9.14e-03	2d8/17 L=50	70,89,65	
		50.0	0.64	4.0	4.0	0.0	0.19	0.05	0.06	0.02	2d8/17 L=50	70,19,44	
							M_T= 5	**Z=330.0**	**P=1**	**P=5**			
Trave	Note	Pos.	%Af	Af inf.	Af. sup	Af long.	x/d	V N/M	V V/T cls	V V/T acc	Staffe	Rif. cmb	
61	ok,ok	0.0	0.64	4.0	4.0	0.0	0.19	0.09	0.09	0.02	2d8/17 L=54	60,84,60	
	s=1,m=1	27.0	0.64	4.0	4.0	0.0	0.19	0.07	0.10	0.03	2d8/17 L=54	96,84,60	
		54.0	0.64	4.0	4.0	0.0	0.19	0.08	0.10	0.03	2d8/17 L=54	96,84,60	
5	ok,ok	0.0	0.64	4.0	4.0	0.0	0.19	0.06	0.03	0.01	2d8/17 L=54	96,96,96	
	s=1,m=1	27.0	0.64	4.0	4.0	0.0	0.19	0.04	0.02	0.01	2d8/17 L=54	96,96,93	
		54.0	0.64	4.0	4.0	0.0	0.19	0.04	0.02	0.01	2d8/17 L=54	96,96,93	
13	ok,ok	0.0	0.64	4.0	4.0	0.0	0.19	0.03	0.02	6.57e-03	2d8/17 L=54	67,93,91	
	s=1,m=1	27.0	0.64	4.0	4.0	0.0	0.19	0.02	0.01	2.76e-03	2d8/17 L=54	67,93,91	
		54.0	0.64	4.0	4.0	0.0	0.19	0.03	0.02	5.93e-03	2d8/17 L=54	80,78,90	
18	ok,ok	0.0	0.64	4.0	4.0	0.0	0.19	0.03	0.04	0.01	2d8/17 L=54	71,90,90	
	s=1,m=1	27.0	0.64	4.0	4.0	0.0	0.19	0.04	0.04	0.01	2d8/17 L=54	71,90,90	
		54.0	0.64	4.0	4.0	0.0	0.19	0.05	0.04	0.01	2d8/17 L=54	91,89,91	
23	ok,ok	0.0	0.64	4.0	4.0	0.0	0.19	0.07	0.07	0.02	2d8/17 L=54	91,75,28	
	s=1,m=1	27.0	0.64	4.0	4.0	0.0	0.19	0.05	0.07	0.02	2d8/17 L=54	91,75,28	
		54.0	0.64	4.0	4.0	0.0	0.19	0.06	0.07	0.01	2d8/17 L=54	91,75,79	
							M_T= 6	**Z=330.0**	**P=5**	**P=6**			
Trave	Note	Pos.	%Af	Af inf.	Af. sup	Af long.	x/d	V N/M	V V/T cls	V V/T acc	Staffe	Rif. cmb	
62	ok,ok	0.0	0.64	4.0	4.0	0.0	0.19	0.09	0.05	0.04	2d8/17 L=50	75,70,43	
	s=1,m=1	25.0	0.64	4.0	4.0	0.0	0.19	0.08	0.05	0.02	2d8/17 L=50	75,71,75	
		50.0	0.64	4.0	4.0	0.0	0.19	0.10	0.07	0.05	2d8/17 L=50	75,71,20	
6	ok,ok	0.0	0.64	4.0	4.0	0.0	0.19	0.09	0.05	0.05	2d8/17 L=50	75,75,44	
	s=1,m=1	25.0	0.64	4.0	4.0	0.0	0.19	0.07	0.03	0.02	2d8/17 L=50	75,75,75	
		50.0	0.64	4.0	4.0	0.0	0.19	0.07	0.04	0.04	2d8/17 L=50	75,74,19	
14	ok,ok	0.0	0.64	4.0	4.0	0.0	0.19	0.04	0.04	0.04	2d8/17 L=50	75,20,20	
	s=1,m=1	25.0	0.64	4.0	4.0	0.0	0.19	0.04	0.01	1.94e-03	2d8/17 L=50	75,79,79	
		50.0	0.64	4.0	4.0	0.0	0.19	0.03	0.04	0.04	2d8/17 L=50	75,20,43	
19	ok,ok	0.0	0.64	4.0	4.0	0.0	0.19	0.02	0.04	0.04	2d8/17 L=50	93,80,20	
	s=1,m=1	25.0	0.64	4.0	4.0	0.0	0.19	0.02	0.03	0.02	2d8/17 L=50	87,77,77	
		50.0	0.64	4.0	4.0	0.0	0.19	0.03	0.05	0.05	2d8/17 L=50	77,77,43	
24	ok,ok	0.0	0.64	4.0	4.0	0.0	0.19	0.06	0.06	0.04	2d8/17 L=50	77,19,19	
	s=1,m=1	25.0	0.64	4.0	4.0	0.0	0.19	0.05	0.03	7.53e-03	2d8/17 L=50	77,93,77	
		50.0	0.64	4.0	4.0	0.0	0.19	0.05	0.05	0.04	2d8/17 L=50	77,19,44	
27	ok,ok	0.0	0.64	4.0	4.0	0.0	0.19	0.08	0.04	0.01	2d8/17 L=50	85,93,77	
	s=1,m=1	25.0	0.64	4.0	4.0	0.0	0.19	0.07	0.04	0.02	2d8/17 L=50	85,93,27	
		50.0	0.64	4.0	4.0	0.0	0.19	0.08	0.05	0.02	2d8/17 L=50	85,93,27	
29	ok,ok	0.0	0.64	4.0	4.0	0.0	0.19	0.08	0.04	8.93e-03	2d8/17 L=50	85,77,58	
	s=1,m=1	25.0	0.64	4.0	4.0	0.0	0.19	0.08	0.04	5.36e-03	2d8/17 L=50	85,77,77	
		50.0	0.64	4.0	4.0	0.0	0.19	0.08	0.03	5.73e-03	2d8/17 L=50	85,77,80	
31	ok,ok	0.0	0.64	4.0	4.0	0.0	0.19	0.06	0.04	6.56e-03	2d8/17 L=50	85,77,77	
	s=1,m=1	25.0	0.64	4.0	4.0	0.0	0.19	0.06	0.03	3.03e-03	2d8/17 L=50	85,77,77	
		50.0	0.64	4.0	4.0	0.0	0.19	0.06	0.03	4.59e-03	2d8/17 L=50	85,69,80	
33	ok,ok	0.0	0.64	4.0	4.0	0.0	0.19	0.04	0.03	5.78e-03	2d8/17 L=50	81,89,27	
	s=1,m=1	25.0	0.64	4.0	4.0	0.0	0.19	0.04	0.03	1.29e-03	2d8/17 L=50	81,89,77	

Viale Duca Alessandro n. 11 – 43123 Parma
Cell. 335 1403156 – E mail ing.concari@gmail.com
Sito web: studioaire.it – P.IVA 02561480340

		50.0	0.64	4.0	4.0	0.0	0.19	0.04	0.03	4.20e-03	2d8/17 L=50	81,89,58	
35	ok,ok	0.0	0.64	4.0	4.0	0.0	0.19	0.02	0.03	7.27e-03	2d8/17 L=50	81,81,87	
	s=1,m=1	25.0	0.64	4.0	4.0	0.0	0.19	0.02	0.03	3.74e-03	2d8/17 L=50	81,81,87	
		50.0	0.64	4.0	4.0	0.0	0.19	0.02	0.02	5.18e-03	2d8/17 L=50	81,81,59	
Trave			**%Af**	**Af inf.**	**Af. sup**	**Af long.**	**x/d**	**V N/M**	**V V/T cls**	**V V/T acc**			
			0.64	4.02	4.02	0.0	0.19	0.11	0.17	0.07			

Macro Setto	Spessore	Id Materiale	Id Criterio	Progettazione
	cm			
1	25.00	1	1	Singolo elemento NON DISSIPATIVO

Nodo	Stato	x/d	V N/M	ver. rid	Af pr-	Af pr+	Af sec-	Af sec+	N z	N o	N zo	M z	M o	M zo
									daN/ m	daN/ m	daN/ m	daN	daN	daN
47	ok	0.16	0.1	8.26e-02	5.7	5.7	3.9	3.9	-2.666e+04	-2654.5	4185.8	1253.2	21.0	-79.6
48	ok	0.16	0.1	5.46e-02	5.7	5.7	3.9	3.9	-1.803e+04	-2907.9	1205.4	1179.6	-29.1	-71.1
49	ok	0.16	0.2	0.1	5.7	5.7	3.9	3.9	-4.046e+04	-6150.3	-6120.3	935.5	44.5	70.7
50	ok	0.16	0.6	4.93e-02	5.7	5.7	3.9	3.9	1.849e+04	-1551.9	4795.0	-83.2	-58.4	-32.5
162	ok	0.16	0.1	3.18e-02	5.7	5.7	3.9	3.9	-1.233e+04	820.1	1457.4	113.2	-238.0	-62.1
163	ok	0.16	0.2	2.60e-02	5.7	5.7	3.9	3.9	-6711.3	-1977.0	1867.3	-58.3	-288.8	-46.0
164	ok	0.16	0.2	6.46e-02	5.7	5.7	3.9	3.9	-1.641e+04	-1493.7	2709.9	208.8	-229.3	-76.6
165	ok	0.16	0.2	5.92e-02	5.7	5.7	3.9	3.9	-2.303e+04	1111.2	-2099.8	77.4	-116.5	-40.7
166	ok	0.16	8.27e-02	4.81e-02	5.7	5.7	3.9	3.9	-1.881e+04	103.5	-969.8	-74.6	-54.3	-2.2
167	ok	0.16	4.66e-02	4.10e-02	5.7	5.7	3.9	3.9	-1.539e+04	-520.5	-353.5	-108.8	-56.9	81.8
168	ok	0.16	0.2	4.65e-02	5.7	5.7	3.9	3.9	-1.691e+04	-989.2	4211.2	645.9	-196.8	28.0
294	ok	0.16	0.2	2.22e-02	5.7	5.7	3.9	3.9	-8634.3	-1281.9	-742.4	85.9	-176.6	-46.1
295	ok	0.16	0.2	1.96e-02	5.7	5.7	3.9	3.9	-32.2	1015.2	-7694.9	37.4	-95.6	-52.9
296	ok	0.16	0.2	5.94e-02	5.7	5.7	3.9	3.9	-2.285e+04	-4178.7	-2828.0	199.1	-278.6	-112.2
297	ok	0.16	0.2	6.31e-02	5.7	5.7	3.9	3.9	-2.472e+04	-372.0	-829.0	135.3	4.7	-77.0
298	ok	0.16	6.89e-02	6.03e-02	5.7	5.7	3.9	3.9	-2.335e+04	-1211.2	-1420.0	-75.6	-20.7	-19.2
299	ok	0.16	6.51e-02	6.66e-02	5.7	5.7	3.9	3.9	-2.203e+04	464.5	-1174.8	-64.9	-9.6	114.4
300	ok	0.16	0.2	7.26e-02	5.7	5.7	3.9	3.9	-2.415e+04	337.5	419.6	820.2	-51.8	22.5
301	ok	0.16	0.3	2.04e-02	5.7	5.7	3.9	3.9	676.8	449.1	-7309.7	104.1	34.4	-111.5
302	ok	0.16	0.2	2.28e-02	5.7	5.7	3.9	3.9	-7695.8	375.8	2093.1	-36.7	-353.6	112.9
303	ok	0.16	0.5	2.33e-02	5.7	5.7	3.9	3.9	1.255e+04	6296.6	-3891.9	235.7	418.5	-223.2
304	ok	0.16	0.2	3.15e-02	5.7	5.7	3.9	3.9	-1.021e+04	-4458.5	3962.1	13.4	-124.2	141.1
305	ok	0.16	8.47e-02	4.46e-02	5.7	5.7	3.9	3.9	-1.548e+04	-1130.5	1749.6	-41.5	-21.6	32.5
306	ok	0.16	0.1	6.21e-02	5.7	5.7	3.9	3.9	-2.423e+04	440.2	-490.0	-20.6	-18.5	-90.2
307	ok	0.16	0.3	8.47e-02	5.7	5.7	3.9	3.9	-3.324e+04	2599.7	-161.2	721.2	-35.9	13.2
308	ok	0.16	0.3	3.54e-02	5.7	5.7	3.9	3.9	-1.101e+04	-5266.5	4846.5	430.7	246.2	-63.8
309	ok	0.16	0.3	4.12e-02	5.7	5.7	3.9	3.9	-1.098e+04	-2871.8	-1936.1	155.6	121.3	87.5
310	ok	0.16	0.3	6.37e-02	5.7	5.7	3.9	3.9	-1.670e+04	261.1	958.1	126.0	95.2	3.6
311	ok	0.16	0.3	3.86e-02	5.7	5.7	3.9	3.9	-1.477e+04	2446.1	-2536.2	72.7	92.8	5.3
312	ok	0.16	0.2	3.43e-02	5.7	5.7	3.9	3.9	-8388.3	-711.2	-1093.5	27.6	10.4	8.1
313	ok	0.16	0.2	4.22e-02	5.7	5.7	3.9	3.9	-1.346e+04	-1366.6	-2463.0	-27.3	-38.9	-37.7
314	ok	0.16	0.5	5.94e-02	5.7	5.7	3.9	3.9	-1.763e+04	-2148.8	-5761.3	628.5	-112.3	-8.4
Nodo		**x/d**	**V N/M**	**ver. rid**	**Af pr-**	**Af pr+**	**Af sec-**	**Af sec+**	**N z**	**N o**	**N zo**	**M z**	**M o**	**M zo**
									-4.046e+04	-6150.33	-7694.92	-108.80	-353.58	-223.23
		0.16	0.58	0.12	5.65	5.65	3.93	3.93	1.849e+04	6296.58	4846.49	1253.23	418.50	141.08

Nodo	Stato	Max tau	Ver V pr	Ver V sec	Af V pr	Af V sec	V pr	V sec
		daN/cm2					daN/ m	daN/ m
47	ok	2.46						
48	ok	2.46						
49	ok	1.71						
50	ok	1.71						
162	ok	0.61						
163	ok	0.86						
164	ok	0.83						
165	ok	0.76						
166	ok	0.12						
167	ok	0.16						
168	ok	2.68						
294	ok	0.61						
295	ok	0.86						
296	ok	0.83						
297	ok	0.76						
298	ok	0.12						
299	ok	0.16						
300	ok	2.68						
301	ok	0.77						
302	ok	2.08						
303	ok	0.71						
304	ok	0.26						
305	ok	0.13						
306	ok	0.08						
307	ok	1.86						
308	ok	0.77						
309	ok	2.08						
310	ok	0.38						
311	ok	0.26						
312	ok	0.13						
313	ok	0.08						
314	ok	1.86						
Nodo		**Max tau**	**Ver V pr**	**Ver V sec**	**Af V pr**	**Af V sec**	**V pr**	**V sec**
		2.68						

Viale Duca Alessandro n. 11 – 43123 Parma
Cell. 335 1403156 – E mail ing.concari@gmail.com
Sito web: studioaire.it – P.IVA 02561480340

Macro Setto	Spessore	Id Materiale	Id Criterio	Progettazione
	cm			
2	25.00	1	1	Singolo elemento NON DISSIPATIVO

Nodo	Stato	x/d	V N/M	ver. rid	Af pr-	Af pr+	Af sec-	Af sec+	N z	N o	N zo	M z	M o	M zo
									daN/ m	daN/ m	daN/ m	daN	daN	daN
1	ok	0.16	0.2	2.44e-02	5.7	5.7	3.9	3.9	-7695.9	1932.3	-4535.9	-70.7	-63.2	69.1
2	ok	0.16	0.2	2.95e-02	5.7	5.7	3.9	3.9	-9757.2	1354.0	-4800.1	-257.6	-112.6	-28.2
50	ok	0.16	0.4	3.78e-02	5.7	5.7	3.9	3.9	-1.113e+04	-3309.3	-6155.7	-81.4	-2.0	-19.1
56	ok	0.16	0.4	3.13e-02	5.7	5.7	3.9	3.9	-6766.9	-2528.4	367.2	-411.5	-82.2	35.8
62	ok	0.16	0.2	2.63e-02	5.7	5.7	3.9	3.9	-1.027e+04	-3451.7	330.0	-394.5	-95.4	-1.8
68	ok	0.16	0.2	3.38e-02	5.7	5.7	3.9	3.9	-1.089e+04	-3533.2	-4713.9	-494.6	-134.6	-55.6
74	ok	0.16	0.2	2.95e-02	5.7	5.7	3.9	3.9	-9958.0	-3221.7	-2708.4	-383.7	-112.9	-82.2
79	ok	0.16	0.2	1.70e-02	5.7	5.7	3.9	3.9	-4625.8	-625.1	-3450.0	-254.0	53.7	-33.0
81	ok	0.16	0.1	1.51e-02	5.7	5.7	3.9	3.9	-2467.8	954.1	-2405.5	10.0	-53.6	120.5
82	ok	0.16	0.1	1.51e-02	5.7	5.7	3.9	3.9	-4456.8	780.7	-3081.8	3.7	-57.7	122.8
83	ok	0.16	0.2	1.96e-02	5.7	5.7	3.9	3.9	-6310.6	1485.6	-3540.3	-59.8	-68.7	110.1
84	ok	0.16	0.2	2.47e-02	5.7	5.7	3.9	3.9	-8372.0	1855.1	-3863.3	-176.9	-103.7	65.4
85	ok	0.16	0.2	2.87e-02	5.7	5.7	3.9	3.9	-1.044e+04	1040.1	-3058.2	-408.5	-153.3	-7.2
86	ok	0.16	0.2	1.99e-02	5.7	5.7	3.9	3.9	-4646.4	-1895.2	-4251.5	-56.1	-181.3	128.4
87	ok	0.16	0.4	2.81e-02	5.7	5.7	3.9	3.9	-4135.5	9729.8	688.8	-40.2	-157.1	124.1
88	ok	0.16	0.2	2.08e-02	5.7	5.7	3.9	3.9	-4449.1	696.9	-4918.4	-40.3	-139.6	121.4
89	ok	0.16	0.2	2.11e-02	5.7	5.7	3.9	3.9	-5770.1	988.4	-3928.6	-11.8	-90.3	108.4
90	ok	0.16	0.2	2.30e-02	5.7	5.7	3.9	3.9	-5812.1	1433.4	-4038.5	-2.6	-56.5	108.1
281	ok	0.16	0.2	2.43e-02	5.7	5.7	3.9	3.9	-4689.6	-4710.8	-4670.5	-58.9	-271.5	73.5
282	ok	0.16	0.4	2.37e-02	5.7	5.7	3.9	3.9	-4587.4	6676.2	-515.6	-23.8	-345.1	93.8
283	ok	0.16	0.2	2.10e-02	5.7	5.7	3.9	3.9	-4202.6	-1828.2	-4605.9	-42.3	-182.5	63.7
284	ok	0.16	0.1	2.04e-02	5.7	5.7	3.9	3.9	-5316.2	743.6	-4022.7	-3.0	-104.3	53.4
285	ok	0.16	0.1	2.20e-02	5.7	5.7	3.9	3.9	-5775.1	953.8	-4013.9	12.2	-3.8	44.0
286	ok	0.16	0.2	2.31e-02	5.7	5.7	3.9	3.9	-6270.3	1389.8	-5321.2	24.6	115.3	33.3
287	ok	0.16	0.2	2.19e-02	5.7	5.7	3.9	3.9	-5962.2	2004.5	-5208.1	-46.0	157.4	11.8
308	ok	0.16	0.4	4.01e-02	5.7	5.7	3.9	3.9	-1.225e+04	-9468.9	2947.5	242.3	154.9	-60.4
309	ok	0.16	0.5	3.73e-02	5.7	5.7	3.9	3.9	-1.128e+04	4948.3	1952.7	106.1	175.3	-47.1
310	ok	0.16	0.2	4.10e-02	5.7	5.7	3.9	3.9	-1.348e+04	-2496.7	4143.1	253.2	118.9	-29.7
311	ok	0.16	0.2	3.07e-02	5.7	5.7	3.9	3.9	-1.188e+04	-945.2	-1332.6	55.0	32.6	28.4
312	ok	0.16	0.2	3.14e-02	5.7	5.7	3.9	3.9	-1.061e+04	-662.4	-1873.2	-75.5	-2.9	4.3
313	ok	0.16	0.2	3.58e-02	5.7	5.7	3.9	3.9	-1.038e+04	-1340.1	-3185.3	-115.9	-55.8	-19.4
314	ok	0.16	0.4	3.71e-02	5.7	5.7	3.9	3.9	-1.101e+04	-4178.2	-5159.6	-186.1	-137.3	-44.0
315	ok	0.16	0.4	2.56e-02	5.7	5.7	3.9	3.9	8074.5	3359.1	-3333.9	156.7	356.6	-10.8
316	ok	0.16	0.5	1.69e-02	5.7	5.7	3.9	3.9	9881.5	6375.5	-3305.5	74.7	470.1	97.0
317	ok	0.16	0.2	2.60e-02	5.7	5.7	3.9	3.9	606.4	1329.4	-2065.9	179.0	129.7	26.7
318	ok	0.16	0.1	2.61e-02	5.7	5.7	3.9	3.9	-9702.7	-334.2	-698.6	51.0	14.5	42.6
319	ok	0.16	0.2	2.90e-02	5.7	5.7	3.9	3.9	-9791.3	78.4	-1433.9	-52.6	-8.3	31.4
320	ok	0.16	0.2	3.45e-02	5.7	5.7	3.9	3.9	-1.027e+04	-75.2	-2674.5	-107.4	-84.2	11.8
321	ok	0.16	0.3	3.75e-02	5.7	5.7	3.9	3.9	-6913.4	1870.4	1952.8	-285.1	-98.5	39.6
322	ok	0.16	0.3	2.16e-02	5.7	5.7	3.9	3.9	2049.4	4584.1	-3469.4	138.6	147.0	19.2
323	ok	0.16	0.3	1.23e-02	5.7	5.7	3.9	3.9	868.8	6508.2	-5596.7	43.9	118.2	-67.6
324	ok	0.16	0.1	1.34e-02	5.7	5.7	3.9	3.9	1743.6	-92.6	-3143.1	124.3	81.1	76.2
325	ok	0.16	0.1	1.44e-02	5.7	5.7	3.9	3.9	-1644.4	-1924.4	-2108.8	55.9	15.1	36.9
326	ok	0.16	0.1	1.53e-02	5.7	5.7	3.9	3.9	-3551.1	1949.7	473.9	-95.7	-46.7	56.2
327	ok	0.16	0.2	2.07e-02	5.7	5.7	3.9	3.9	-7968.3	2120.6	1102.4	-124.9	-80.6	39.9
328	ok	0.16	0.2	2.69e-02	5.7	5.7	3.9	3.9	-7576.1	1453.4	894.1	-273.7	-110.5	15.5
329	ok	0.16	0.2	1.70e-02	5.7	5.7	3.9	3.9	-306.6	3051.4	1927.4	2.2	-7.6	94.7
330	ok	0.16	0.3	2.27e-02	5.7	5.7	3.9	3.9	1806.9	8283.7	4195.4	5.6	16.5	84.3
Nodo		**x/d**	**V N/M**	**ver. rid**	**Af pr-**	**Af pr+**	**Af sec-**	**Af sec+**	**N z**	**N o**	**N zo**	**M z**	**M o**	**M zo**
									-1.348e+04	-9468.88	-6155.71	-494.60	-345.13	-82.20
		0.16	0.55	0.04	5.65	5.65	3.93	3.93	9881.55	9729.76	4195.40	253.20	470.13	128.39

Nodo	Stato	Max tau	Ver V pr	Ver V sec	Af V pr	Af V sec	V pr	V sec
		daN/cm2					daN/ m	daN/ m
1	ok	0.34						
2	ok	0.96						
50	ok	0.68						
56	ok	0.68						
62	ok	0.45						
68	ok	0.44						
74	ok	0.71						
79	ok	0.71						
81	ok	0.21						
82	ok	0.14						
83	ok	0.20						
84	ok	0.32						
85	ok	0.48						
86	ok	0.39						
87	ok	1.14						
88	ok	0.33						
89	ok	0.23						
90	ok	0.25						
281	ok	0.39						
282	ok	1.14						
283	ok	0.33						
284	ok	0.23						
285	ok	0.25						
286	ok	0.34						
287	ok	0.96						
308	ok	0.64						
309	ok	1.63						
310	ok	0.55						

Viale Duca Alessandro n. 11 – 43123 Parma
Cell. 335 1403156 – E mail ing.concari@gmail.com
Sito web: studioaire.it – P.IVA 02561480340

Nodo	Stato	Max tau	Ver V pr	Ver V sec	Af V pr	Af V sec	V pr	V sec
311	ok	0.40						
312	ok	0.37						
313	ok	0.35						
314	ok	0.71						
315	ok	0.64						
316	ok	1.63						
317	ok	0.55						
318	ok	0.40						
319	ok	0.37						
320	ok	0.35						
321	ok	0.71						
322	ok	0.29						
323	ok	0.20						
324	ok	0.19						
325	ok	0.23						
326	ok	0.23						
327	ok	0.33						
328	ok	0.44						
329	ok	0.26						
330	ok	0.32						
Nodo		**Max tau**	**Ver V pr**	**Ver V sec**	**Af V pr**	**Af V sec**	**V pr**	**V sec**
		1.63						

Macro Setto	Spessore	Id Materiale	Id Criterio	Progettazione
	cm			
4	25.00	1	1	Singolo elemento NON DISSIPATIVO

Nodo	Stato	x/d	V N/M	ver. rid	Af pr-	Af pr+	Af sec-	Af sec+	N z	N o	N zo	M z	M o	M zo
									daN/ m	daN/ m	daN/ m	daN	daN	daN
15	ok	0.16	0.2	2.21e-03	5.7	5.7	3.9	3.9	5256.0	2985.2	2383.8	-7.4	23.7	22.1
18	ok	0.16	0.2	7.83e-03	5.7	5.7	3.9	3.9	-1530.2	-1755.3	77.7	-159.5	18.5	73.2
19	ok	0.16	0.3	3.07e-02	5.7	5.7	3.9	3.9	-1.121e+04	-5035.1	-2353.2	-663.6	-85.8	98.1
22	ok	0.16	0.2	3.91e-02	5.7	5.7	3.9	3.9	-1.276e+04	-5922.4	-4800.0	-786.2	-184.9	-31.8
24	ok	0.16	0.2	3.40e-02	5.7	5.7	3.9	3.9	-1.123e+04	-4460.3	-2966.4	-624.8	-149.0	-122.9
26	ok	0.16	0.2	2.24e-02	5.7	5.7	3.9	3.9	-7107.1	-2690.9	-3144.6	-294.3	-12.0	-209.3
92	ok	0.16	0.2	1.36e-02	5.7	5.7	3.9	3.9	-3633.6	969.8	-3237.9	-67.5	63.4	-172.8
93	ok	0.16	0.2	2.72e-02	5.7	5.7	3.9	3.9	-9076.4	-857.8	-3841.9	-310.8	-164.1	-162.4
94	ok	0.16	0.2	1.99e-02	5.7	5.7	3.9	3.9	-5937.7	-769.4	-3580.1	-95.8	-218.0	-135.8
95	ok	0.16	0.1	2.52e-02	5.7	5.7	3.9	3.9	-7478.9	28.8	-4802.8	-159.5	-187.5	-66.0
96	ok	0.16	0.2	2.25e-02	5.7	5.7	3.9	3.9	-7509.4	-1706.3	-3031.9	-129.8	-424.0	-63.0
97	ok	0.16	0.1	2.25e-02	5.7	5.7	3.9	3.9	-7368.2	-1344.7	-3185.6	-169.7	-300.8	-19.8
98	ok	0.16	0.2	2.35e-02	5.7	5.7	3.9	3.9	-8207.1	-4479.1	182.9	-225.5	-905.5	30.6
99	ok	0.16	0.1	2.10e-02	5.7	5.7	3.9	3.9	-6115.3	-2964.8	-1058.2	-201.4	-383.7	31.4
100	ok	0.16	0.2	2.84e-02	5.7	5.7	3.9	3.9	-9102.8	-4747.6	-770.3	-190.3	-780.5	145.0
101	ok	0.16	0.2	2.63e-02	5.7	5.7	3.9	3.9	-6358.6	-2365.9	-200.0	-156.4	-306.7	69.4
102	ok	0.16	0.2	4.75e-02	5.7	5.7	3.9	3.9	-1.405e+04	-6753.2	-877.2	342.0	-89.4	167.0
103	ok	0.16	0.2	2.51e-02	5.7	5.7	3.9	3.9	1452.4	-4413.4	4301.7	-74.6	-231.2	59.6
104	ok	0.16	0.3	6.19e-02	5.7	5.7	3.9	3.9	-1.819e+04	3825.5	-4500.4	175.0	-118.0	214.0
105	ok	0.16	0.4	2.18e-02	5.7	5.7	3.9	3.9	-5507.5	6065.7	12.1	82.6	40.9	248.3
106	ok	0.16	0.2	3.40e-02	5.7	5.7	3.9	3.9	-1.152e+04	-726.7	-4733.6	-490.8	-205.2	-73.0
107	ok	0.16	0.2	2.77e-02	5.7	5.7	3.9	3.9	-9624.9	548.2	-3732.3	-250.5	-217.6	-24.4
108	ok	0.16	0.1	2.19e-02	5.7	5.7	3.9	3.9	-7567.1	-61.3	-2921.1	-170.2	-207.1	-0.7
109	ok	0.16	0.1	1.77e-02	5.7	5.7	3.9	3.9	-4763.8	-1087.7	-2351.3	-155.5	-180.0	11.9
110	ok	0.16	0.1	1.59e-02	5.7	5.7	3.9	3.9	-4388.4	-1607.2	-1801.1	-120.7	-155.0	6.3
111	ok	0.16	0.2	1.83e-02	5.7	5.7	3.9	3.9	-3031.7	120.9	-2663.9	-63.7	-110.1	28.2
112	ok	0.16	0.3	1.99e-02	5.7	5.7	3.9	3.9	1826.7	6747.6	3621.1	7.0	-46.4	11.1
113	ok	0.16	0.2	3.18e-02	5.7	5.7	3.9	3.9	-1.175e+04	96.7	-2941.4	-559.7	-215.7	-10.4
114	ok	0.16	0.2	2.64e-02	5.7	5.7	3.9	3.9	-9714.6	1107.2	-2691.5	-264.5	-191.3	-11.8
115	ok	0.16	0.1	2.04e-02	5.7	5.7	3.9	3.9	-7472.1	415.8	-2097.1	-167.1	-159.9	-11.3
116	ok	0.16	8.65e-02	1.49e-02	5.7	5.7	3.9	3.9	-5391.7	-286.4	-1552.4	-117.6	-137.9	-9.9
117	ok	0.16	0.1	1.38e-02	5.7	5.7	3.9	3.9	-585.0	-1635.4	-4048.0	22.7	-21.9	-42.2
118	ok	0.16	0.1	1.78e-02	5.7	5.7	3.9	3.9	1210.6	-3368.9	-3913.2	38.1	44.8	-67.2
119	ok	0.16	0.3	2.02e-02	5.7	5.7	3.9	3.9	-454.0	-4611.5	1663.5	42.1	125.1	-39.1
120	ok	0.16	0.2	2.58e-02	5.7	5.7	3.9	3.9	-1.006e+04	1074.3	-6.1	-437.6	-144.0	46.5
121	ok	0.16	0.1	2.04e-02	5.7	5.7	3.9	3.9	-5247.9	1394.1	-2728.1	-187.0	-81.4	-19.3
122	ok	0.16	0.1	1.80e-02	5.7	5.7	3.9	3.9	-4570.9	336.7	-2745.2	-91.7	40.0	-34.0
123	ok	0.16	0.1	1.85e-02	5.7	5.7	3.9	3.9	-5800.5	-143.4	-2799.1	55.1	89.8	-26.4
124	ok	0.16	0.2	2.08e-02	5.7	5.7	3.9	3.9	-6021.3	-1638.2	-2405.1	81.9	98.4	-51.5
125	ok	0.16	0.2	2.39e-02	5.7	5.7	3.9	3.9	-9023.7	-2682.3	1481.3	112.9	57.3	-105.9
126	ok	0.16	0.4	2.28e-02	5.7	5.7	3.9	3.9	-7247.6	5921.2	-181.5	60.8	60.8	-188.8
127	ok	0.16	0.2	5.45e-03	5.7	5.7	3.9	3.9	4807.6	222.9	-3606.3	-74.3	146.9	-28.6
128	ok	0.16	0.2	1.13e-02	5.7	5.7	3.9	3.9	-1835.1	857.2	-3175.3	-112.0	150.2	-28.7
129	ok	0.16	0.2	1.78e-02	5.7	5.7	3.9	3.9	-3495.3	525.2	-3516.4	-81.2	131.6	-32.4
130	ok	0.16	0.1	2.07e-02	5.7	5.7	3.9	3.9	-6193.4	-851.3	-3702.9	99.8	159.6	-18.4
131	ok	0.16	0.2	2.42e-02	5.7	5.7	3.9	3.9	-7925.0	-1835.3	-3021.4	134.2	154.4	-40.1
132	ok	0.16	0.2	3.78e-02	5.7	5.7	3.9	3.9	-1.301e+04	-5937.8	686.4	405.0	185.4	-43.1
133	ok	0.16	0.2	4.45e-02	5.7	5.7	3.9	3.9	-1.417e+04	1183.7	2819.5	346.9	59.0	-155.2
Nodo		**x/d**	**V N/M**	**ver. rid**	**Af pr-**	**Af pr+**	**Af sec-**	**Af sec+**	**N z**	**N o**	**N zo**	**M z**	**M o**	**M zo**
									-1.819e+04	-6753.17	-4802.82	-786.19	-905.48	-209.30
		0.16	0.39	0.06	5.65	5.65	3.93	3.93	5255.96	6747.63	4301.67	405.01	185.42	248.30

Nodo	Stato	Max tau	Ver V pr	Ver V sec	Af V pr	Af V sec	V pr	V sec
		daN/cm2					daN/ m	daN/ m
15	ok	0.52						
18	ok	0.58						
19	ok	0.58						
22	ok	0.55						

Viale Duca Alessandro n. 11 – 43123 Parma
Cell. 335 1403156 – E mail ing.concari@gmail.com
Sito web: studioaire.it – P.IVA 02561480340

Nodo	Stato	Max tau	Ver V pr	Ver V sec	Af V pr	Af V sec	V pr	V sec
24	ok	0.49						
26	ok	0.52						
92	ok	0.50						
93	ok	0.50						
94	ok	0.46						
95	ok	0.46						
96	ok	0.40						
97	ok	0.40						
98	ok	0.40						
99	ok	0.40						
100	ok	0.60						
101	ok	0.60						
102	ok	0.80						
103	ok	0.80						
104	ok	0.94						
105	ok	0.94						
106	ok	0.41						
107	ok	0.23						
108	ok	0.22						
109	ok	0.25						
110	ok	0.23						
111	ok	0.21						
112	ok	0.33						
113	ok	0.51						
114	ok	0.27						
115	ok	0.16						
116	ok	0.15						
117	ok	0.19						
118	ok	0.14						
119	ok	0.60						
120	ok	0.51						
121	ok	0.33						
122	ok	0.22						
123	ok	0.18						
124	ok	0.46						
125	ok	0.85						
126	ok	0.96						
127	ok	0.51						
128	ok	0.33						
129	ok	0.22						
130	ok	0.18						
131	ok	0.46						
132	ok	0.85						
133	ok	0.96						
Nodo		Max tau	Ver V pr	Ver V sec	Af V pr	Af V sec	V pr	V sec
		0.96						

Macro Setto	Spessore	Id Materiale	Id Criterio	Progettazione
	cm			
5	25.00	1	1	Singolo elemento NON DISSIPATIVO

Nodo	Stato	x/d	V N/M	ver. rid	Af pr-	Af pr+	Af sec-	Af sec+	N z	N o	N zo	M z	M o	M zo
									daN/ m	daN/ m	daN/ m	daN	daN	daN
17	ok	0.16	0.1	9.14e-03	5.7	5.7	3.9	3.9	3807.0	198.0	-547.1	-103.3	-25.4	-42.0
18	ok	0.16	0.2	9.80e-03	5.7	5.7	3.9	3.9	4595.0	428.4	-2617.4	141.7	-24.9	-40.8
21	ok	0.16	0.7	3.59e-02	5.7	5.7	3.9	3.9	4681.7	-1583.5	-5708.1	591.0	128.0	-144.2
30	ok	0.16	0.2	0.2	5.7	5.7	3.9	3.9	-4.522e+04	-8257.3	1.445e+04	644.5	77.8	-26.4
48	ok	0.16	0.1	5.96e-02	5.7	5.7	3.9	3.9	-1.706e+04	-8935.1	-7061.2	-193.4	19.9	-17.1
54	ok	0.16	0.3	2.94e-02	5.7	5.7	3.9	3.9	-1.124e+04	-5277.6	-1318.1	-112.4	-14.5	60.6
60	ok	0.16	0.2	3.51e-02	5.7	5.7	3.9	3.9	-1.117e+04	-5505.1	769.4	100.6	12.5	55.8
66	ok	0.16	0.1	3.61e-02	5.7	5.7	3.9	3.9	-1.098e+04	-5527.4	3842.3	144.4	22.4	89.2
72	ok	0.16	0.1	2.91e-02	5.7	5.7	3.9	3.9	-9059.8	-2897.1	4389.2	316.6	76.2	123.8
127	ok	0.16	0.2	1.33e-02	5.7	5.7	3.9	3.9	-2151.2	677.7	3448.3	55.9	-146.5	-41.3
128	ok	0.16	0.2	1.80e-02	5.7	5.7	3.9	3.9	-4115.4	1076.0	4704.1	-13.3	-151.2	-39.2
129	ok	0.16	0.2	2.20e-02	5.7	5.7	3.9	3.9	-5895.5	727.0	4985.4	-21.2	-141.3	-37.4
130	ok	0.16	0.2	2.54e-02	5.7	5.7	3.9	3.9	-7635.0	658.7	4921.0	-31.8	-143.8	-30.1
131	ok	0.16	0.2	3.27e-02	5.7	5.7	3.9	3.9	-9253.9	-2742.1	5895.3	-112.5	-124.9	-33.3
132	ok	0.16	0.2	3.90e-02	5.7	5.7	3.9	3.9	-1.209e+04	-8315.4	1592.7	-260.9	-194.4	-33.7
133	ok	0.16	0.4	4.38e-02	5.7	5.7	3.9	3.9	-1.292e+04	1.052e+04	3264.7	-166.5	-4.8	-16.7
134	ok	0.16	0.3	2.64e-02	5.7	5.7	3.9	3.9	-7628.3	-2429.1	4573.3	-95.5	-107.9	-29.1
135	ok	0.16	0.4	3.59e-02	5.7	5.7	3.9	3.9	-6646.7	1.345e+04	32.9	-43.8	7.5	101.4
136	ok	0.16	0.4	4.67e-02	5.7	5.7	3.9	3.9	-8911.9	-588.7	6740.7	-88.0	-99.6	-43.6
137	ok	0.16	0.4	4.20e-02	5.7	5.7	3.9	3.9	-9226.1	513.2	5220.6	20.0	-103.9	-32.1
138	ok	0.16	0.2	4.39e-02	5.7	5.7	3.9	3.9	-9787.2	-451.2	5160.5	13.6	-81.3	-36.1
139	ok	0.16	0.2	5.01e-02	5.7	5.7	3.9	3.9	-1.057e+04	-411.9	4737.6	41.9	-49.0	-42.4
140	ok	0.16	0.2	6.51e-02	5.7	5.7	3.9	3.9	-1.871e+04	449.2	4005.2	153.7	23.5	-85.8
141	ok	0.16	0.3	2.84e-02	5.7	5.7	3.9	3.9	6008.3	4515.5	-877.2	-28.6	-72.0	-28.6
142	ok	0.16	0.4	3.29e-02	5.7	5.7	3.9	3.9	-2884.3	1.000e+04	-5082.1	-5.8	-22.1	56.8
143	ok	0.16	0.8	3.41e-02	5.7	5.7	3.9	3.9	6593.7	2.224e+04	9755.9	24.2	-2.8	-32.6
144	ok	0.16	0.2	5.09e-02	5.7	5.7	3.9	3.9	8497.9	-524.6	1578.6	-80.3	29.5	22.5
145	ok	0.16	9.00e-02	5.42e-02	5.7	5.7	3.9	3.9	-2.123e+04	-1092.2	-723.3	-18.0	-6.0	-15.6
146	ok	0.16	7.03e-02	6.53e-02	5.7	5.7	3.9	3.9	-2.514e+04	-1147.8	1669.0	91.2	0.9	-52.8
147	ok	0.16	0.3	8.75e-02	5.7	5.7	3.9	3.9	-2.893e+04	-982.3	2211.8	230.0	22.1	-73.2
148	ok	0.16	0.4	2.91e-02	5.7	5.7	3.9	3.9	-865.4	6477.1	-2937.0	8.7	6.6	58.5
149	ok	0.16	0.3	3.23e-02	5.7	5.7	3.9	3.9	-3189.1	-1959.5	-8622.5	-6.3	-35.4	60.1
150	ok	0.16	0.6	3.66e-02	5.7	5.7	3.9	3.9	-112.5	1.287e+04	-4170.7	13.3	38.2	57.5
155	ok	0.16	0.3	3.78e-02	5.7	5.7	3.9	3.9	1612.5	-2089.7	1.185e+04	-33.6	52.4	-57.9
156	ok	0.16	0.4	2.44e-02	5.7	5.7	3.9	3.9	-2937.3	7734.1	5519.6	-14.6	59.7	-90.1
157	ok	0.16	0.9	4.68e-02	5.7	5.7	3.9	3.9	-855.4	9104.1	-4271.5	2.7	73.7	50.2
162	ok	0.16	0.3	3.54e-02	5.7	5.7	3.9	3.9	-1.020e+04	-2028.0	3374.0	-70.3	342.3	11.0

Viale Duca Alessandro n. 11 – 43123 Parma
Cell. 335 1403156 – E mail ing.concari@gmail.com
Sito web: studioaire.it – P.IVA 02561480340

Nodo	Stato	x/d	V N/M	ver. rid	Af pr-	Af pr+	Af sec-	Af sec+	N z	N o	N zo	M z	M o	M zo
163	ok	0.16	0.6	2.63e-02	5.7	5.7	3.9	3.9	-9611.4	9508.7	3706.5	-7.8	553.7	41.1
164	ok	0.16	0.6	9.09e-02	5.7	5.7	3.9	3.9	-2.108e+04	-1.429e+04	9132.6	-99.5	129.9	32.6
165	ok	0.16	0.3	4.98e-02	5.7	5.7	3.9	3.9	-1.706e+04	-1581.5	3219.6	128.0	184.9	6.2
166	ok	0.16	0.2	4.17e-02	5.7	5.7	3.9	3.9	-1.589e+04	-493.2	2674.3	147.8	92.1	26.9
167	ok	0.16	0.1	3.89e-02	5.7	5.7	3.9	3.9	-1.502e+04	-234.0	1940.8	123.6	50.0	59.4
168	ok	0.16	0.2	4.43e-02	5.7	5.7	3.9	3.9	-1.465e+04	-3137.6	-2048.4	96.0	161.5	82.6
169	ok	0.16	0.2	2.69e-02	5.7	5.7	3.9	3.9	-4121.3	3691.6	-1575.5	125.5	261.8	-52.8
170	ok	0.16	0.6	1.60e-02	5.7	5.7	3.9	3.9	-6116.6	1.046e+04	1565.1	26.5	434.0	127.7
171	ok	0.16	0.4	4.40e-02	5.7	5.7	3.9	3.9	-6538.2	-6368.1	1851.9	-48.6	165.3	99.9
172	ok	0.16	0.2	4.83e-02	5.7	5.7	3.9	3.9	-1.413e+04	-1225.5	3198.6	105.3	178.0	52.2
173	ok	0.16	0.2	3.83e-02	5.7	5.7	3.9	3.9	-1.445e+04	-279.9	2859.9	125.2	97.0	67.7
174	ok	0.16	0.1	3.61e-02	5.7	5.7	3.9	3.9	-1.128e+04	653.7	4770.1	106.9	87.3	69.0
175	ok	0.16	0.2	4.11e-02	5.7	5.7	3.9	3.9	-1.428e+04	-3431.0	-4718.4	-121.2	74.9	93.2
176	ok	0.16	0.2	1.46e-02	5.7	5.7	3.9	3.9	-2690.7	2478.1	-3199.3	33.8	229.5	109.8
177	ok	0.16	0.4	8.59e-03	5.7	5.7	3.9	3.9	-2325.6	9697.0	-2403.8	39.4	248.6	124.9
178	ok	0.16	0.3	2.20e-02	5.7	5.7	3.9	3.9	-4984.9	-4822.1	762.6	-22.3	125.2	115.9
179	ok	0.16	0.2	2.83e-02	5.7	5.7	3.9	3.9	-6426.0	-3326.4	3753.2	-27.0	81.0	89.4
180	ok	0.16	0.2	2.92e-02	5.7	5.7	3.9	3.9	-8433.7	-1287.2	4092.4	28.5	77.4	77.0
181	ok	0.16	0.2	3.00e-02	5.7	5.7	3.9	3.9	-1.025e+04	138.2	3961.5	151.5	121.2	71.4
182	ok	0.16	0.2	3.35e-02	5.7	5.7	3.9	3.9	-1.020e+04	-325.4	4012.3	184.2	105.6	71.8
183	ok	0.16	0.2	9.04e-03	5.7	5.7	3.9	3.9	-405.8	2480.2	-2864.4	0.6	-131.8	105.1
184	ok	0.16	0.3	3.29e-03	5.7	5.7	3.9	3.9	-493.7	5977.4	-2346.7	5.9	-160.7	113.0
185	ok	0.16	0.2	1.21e-02	5.7	5.7	3.9	3.9	-2034.4	871.6	-3842.7	59.2	-73.1	69.0
186	ok	0.16	0.2	1.70e-02	5.7	5.7	3.9	3.9	-3235.4	561.7	-3554.9	69.1	-58.9	80.5
187	ok	0.16	0.2	2.20e-02	5.7	5.7	3.9	3.9	-3650.4	-815.1	-3248.8	82.6	-49.2	91.8
188	ok	0.16	0.2	2.61e-02	5.7	5.7	3.9	3.9	-9221.0	615.8	3269.4	153.9	106.3	71.8
189	ok	0.16	0.2	2.96e-02	5.7	5.7	3.9	3.9	-9931.9	-214.8	3557.7	365.7	123.1	97.4
190	ok	0.16	0.3	9.60e-03	5.7	5.7	3.9	3.9	-118.1	1708.3	-2694.3	-54.5	-405.1	65.5
191	ok	0.16	0.3	4.74e-03	5.7	5.7	3.9	3.9	-401.3	2894.4	-2220.4	-56.1	-478.8	79.4
192	ok	0.16	0.2	1.28e-02	5.7	5.7	3.9	3.9	-1549.4	606.4	-4351.1	-26.3	-244.8	49.5
193	ok	0.16	0.2	1.41e-02	5.7	5.7	3.9	3.9	-2448.2	303.0	-4186.9	25.2	-190.4	59.1
194	ok	0.16	0.2	1.50e-02	5.7	5.7	3.9	3.9	-2481.1	-300.7	-3765.9	30.4	-131.1	77.9
195	ok	0.16	0.2	1.78e-02	5.7	5.7	3.9	3.9	-2720.1	-262.2	-3627.6	44.4	-72.6	93.4
196	ok	0.16	0.2	2.27e-02	5.7	5.7	3.9	3.9	-8695.9	669.0	1444.9	267.9	85.5	94.2
197	ok	0.16	0.3	9.21e-03	5.7	5.7	3.9	3.9	30.0	1478.0	-2592.2	-57.0	-484.6	20.4
198	ok	0.16	0.3	5.05e-03	5.7	5.7	3.9	3.9	-424.4	2292.7	-2033.1	-44.9	-577.2	32.0
199	ok	0.16	0.2	1.17e-02	5.7	5.7	3.9	3.9	-970.9	563.0	-4270.6	-42.8	-304.2	18.0
200	ok	0.16	0.2	1.27e-02	5.7	5.7	3.9	3.9	-1433.3	361.6	-4297.7	-36.7	-236.9	29.2
201	ok	0.16	0.2	1.22e-02	5.7	5.7	3.9	3.9	-1122.0	237.5	-4028.0	-32.1	-175.1	47.1
202	ok	0.16	0.2	1.13e-02	5.7	5.7	3.9	3.9	-2400.7	392.8	-2557.5	14.5	-147.8	56.7
203	ok	0.16	0.2	9.76e-03	5.7	5.7	3.9	3.9	-1934.5	849.0	-2366.1	39.7	-95.6	62.1
Nodo		**x/d**	**V N/M**	**ver. rid**	**Af pr-**	**Af pr+**	**Af sec-**	**Af sec+**	**N z**	**N o**	**N zo**	**M z**	**M o**	**M zo**
									-4.522e+04	-1.429e+04	-8622.48	-260.93	-577.17	-144.24
		0.16	0.88	0.16	5.65	5.65	3.93	3.93	8497.85	2.224e+04	1.445e+04	644.46	553.67	127.69

Nodo	Stato	Max tau	Ver V pr	Ver V sec	Af V pr	Af V sec	V pr	V sec
		daN/cm2					daN/ m	daN/ m
17	ok	0.36						
18	ok	0.59						
21	ok	0.59						
30	ok	0.58						
48	ok	0.40						
54	ok	0.42						
60	ok	0.42						
66	ok	0.37						
72	ok	0.37						
127	ok	0.66						
128	ok	0.29						
129	ok	0.20						
130	ok	0.18						
131	ok	0.32						
132	ok	0.63						
133	ok	0.75						
134	ok	0.63						
135	ok	0.75						
136	ok	0.32						
137	ok	0.18						
138	ok	0.20						
139	ok	0.29						
140	ok	0.66						
141	ok	0.13						
142	ok	0.29						
143	ok	0.33						
144	ok	0.12						
145	ok	0.14						
146	ok	0.27						
147	ok	0.58						
148	ok	0.13						
149	ok	0.29						
150	ok	0.33						
155	ok	0.54						
156	ok	0.62						
157	ok	0.47						
162	ok	0.54						
163	ok	0.83						
164	ok	0.47						
165	ok	0.18						
166	ok	0.15						
167	ok	0.15						
168	ok	0.67						
169	ok	0.45						

Viale Duca Alessandro n. 11 – 43123 Parma
Cell. 335 1403156 – E mail ing.concari@gmail.com
Sito web: studioaire.it – P.IVA 02561480340

Nodo	Stato	Max tau	Ver V pr	Ver V sec	Af V pr	Af V sec	V pr	V sec
170	ok	0.83						
171	ok	0.36						
172	ok	0.18						
173	ok	0.15						
174	ok	0.16						
175	ok	0.67						
176	ok	0.17						
177	ok	0.50						
178	ok	0.19						
179	ok	0.14						
180	ok	0.12						
181	ok	0.23						
182	ok	0.42						
183	ok	0.19						
184	ok	0.58						
185	ok	0.24						
186	ok	0.17						
187	ok	0.14						
188	ok	0.23						
189	ok	0.39						
190	ok	0.33						
191	ok	0.70						
192	ok	0.29						
193	ok	0.23						
194	ok	0.21						
195	ok	0.25						
196	ok	0.50						
197	ok	0.33						
198	ok	0.70						
199	ok	0.29						
200	ok	0.23						
201	ok	0.21						
202	ok	0.25						
203	ok	0.50						
Nodo		**Max tau**	**Ver V pr**	**Ver V sec**	**Af V pr**	**Af V sec**	**V pr**	**V sec**
		0.83						

Macro Setto	Spessore	Id Materiale	Id Criterio	Progettazione
	cm			
6	25.00	1	1	Singolo elemento NON DISSIPATIVO

Nodo	Stato	x/d	V N/M	ver. rid	Af pr-	Af pr+	Af sec-	Af sec+	N z	N o	N zo	M z	M o	M zo
									daN/ m	daN/ m	daN/ m	daN	daN	daN
16	ok	0.16	0.1	3.74e-03	5.7	5.7	3.9	3.9	3221.5	2914.1	1904.4	-41.9	3.7	1.7
17	ok	0.16	0.1	1.12e-02	5.7	5.7	3.9	3.9	-2639.2	-2021.0	-199.9	163.8	3.6	-49.6
77	ok	0.16	0.2	2.84e-02	5.7	5.7	3.9	3.9	-6317.3	-2988.2	754.1	408.1	94.5	-74.5
78	ok	0.16	0.2	3.03e-02	5.7	5.7	3.9	3.9	-8713.2	-4942.3	-1099.7	492.4	114.7	40.1
79	ok	0.16	0.2	2.43e-02	5.7	5.7	3.9	3.9	-5039.7	-5087.0	-2059.3	196.0	-57.1	69.6
80	ok	0.16	0.2	1.69e-02	5.7	5.7	3.9	3.9	-3328.0	-2250.8	-3387.2	34.7	30.1	69.6
151	ok	0.16	0.2	2.44e-02	5.7	5.7	3.9	3.9	-8669.4	-484.4	-2589.1	316.8	135.3	9.8
152	ok	0.16	0.1	1.68e-02	5.7	5.7	3.9	3.9	-1557.4	-942.2	-3713.3	-61.6	-245.9	-49.2
153	ok	0.16	0.2	2.02e-02	5.7	5.7	3.9	3.9	-619.3	-1081.8	-2260.1	-35.6	-265.5	-30.2
154	ok	0.16	0.1	1.60e-02	5.7	5.7	3.9	3.9	-1288.6	243.5	-3911.6	-51.7	-216.0	-48.1
158	ok	0.16	0.1	1.47e-02	5.7	5.7	3.9	3.9	-2710.9	412.1	-3405.9	-48.7	-195.0	-49.7
159	ok	0.16	0.1	1.36e-02	5.7	5.7	3.9	3.9	-2649.4	669.5	-3569.4	-24.7	-133.0	-30.8
160	ok	0.16	0.1	1.64e-02	5.7	5.7	3.9	3.9	-3573.9	710.5	-2544.8	33.6	-52.1	12.7
161	ok	0.16	0.1	2.11e-02	5.7	5.7	3.9	3.9	-8150.9	598.1	-545.8	282.8	123.1	-10.6
197	ok	0.16	0.2	1.15e-02	5.7	5.7	3.9	3.9	-244.5	583.1	-2610.2	-108.2	-385.7	-9.5
198	ok	0.16	0.2	7.84e-03	5.7	5.7	3.9	3.9	-631.8	-746.1	-2336.4	-118.1	-443.1	26.8
199	ok	0.16	0.2	1.28e-02	5.7	5.7	3.9	3.9	-804.1	587.2	-4063.1	-73.0	-312.2	-13.5
200	ok	0.16	0.2	1.19e-02	5.7	5.7	3.9	3.9	-1206.7	707.2	-4266.3	-42.8	-240.3	13.8
201	ok	0.16	0.2	1.05e-02	5.7	5.7	3.9	3.9	-2002.8	920.1	-2753.3	-10.4	-189.9	20.4
202	ok	0.16	0.1	9.24e-03	5.7	5.7	3.9	3.9	-2091.5	1067.1	-2114.2	43.0	-126.8	42.4
203	ok	0.16	0.1	7.72e-03	5.7	5.7	3.9	3.9	-1738.5	931.3	-1925.0	86.7	-58.6	49.6
267	ok	0.16	0.3	4.67e-02	5.7	5.7	3.9	3.9	-1.270e+04	-8645.0	292.9	-153.5	491.6	-164.4
268	ok	0.16	0.3	5.95e-02	5.7	5.7	3.9	3.9	-1.752e+04	3930.4	-4282.7	-135.6	83.6	-155.7
269	ok	0.16	0.3	2.84e-02	5.7	5.7	3.9	3.9	-9155.4	-4950.7	-640.9	225.6	964.7	-93.3
270	ok	0.16	0.3	2.34e-02	5.7	5.7	3.9	3.9	-7916.0	-4641.9	-858.8	246.6	1133.8	-25.6
271	ok	0.16	0.2	2.10e-02	5.7	5.7	3.9	3.9	-6678.9	-4169.2	-1403.7	245.7	1054.3	60.5
272	ok	0.16	0.2	1.85e-02	5.7	5.7	3.9	3.9	-5152.7	-1206.1	-3511.6	124.7	432.1	106.9
273	ok	0.16	0.2	1.41e-02	5.7	5.7	3.9	3.9	-3464.7	-19.9	-2134.8	55.8	140.5	124.2
274	ok	0.16	0.2	2.53e-02	5.7	5.7	3.9	3.9	-8158.2	184.1	-2397.3	-88.0	199.0	107.9
275	ok	0.16	0.3	2.06e-02	5.7	5.7	3.9	3.9	-5101.0	-4465.8	-3108.0	-9.9	154.9	189.8
276	ok	0.16	0.2	2.59e-02	5.7	5.7	3.9	3.9	-7175.6	-2379.5	329.2	87.2	283.7	38.4
277	ok	0.16	0.2	2.21e-02	5.7	5.7	3.9	3.9	-5904.2	-2965.6	-35.2	131.2	367.2	27.7
278	ok	0.16	0.2	2.26e-02	5.7	5.7	3.9	3.9	-5246.0	-2851.9	-1563.6	115.4	360.5	28.8
279	ok	0.16	0.2	2.29e-02	5.7	5.7	3.9	3.9	-4204.0	-1432.8	-3505.2	80.3	149.5	53.5
280	ok	0.16	0.2	2.24e-02	5.7	5.7	3.9	3.9	-3466.0	-591.6	-2889.8	158.1	107.7	68.4
281	ok	0.16	0.2	2.22e-02	5.7	5.7	3.9	3.9	-7662.9	-2005.4	-2089.1	22.0	507.2	66.1
282	ok	0.16	0.4	3.15e-02	5.7	5.7	3.9	3.9	-8441.5	-9359.4	-3216.4	38.7	749.5	27.2
283	ok	0.16	0.2	2.21e-02	5.7	5.7	3.9	3.9	-5827.1	1232.9	-2245.4	56.5	327.8	53.1
284	ok	0.16	0.1	2.09e-02	5.7	5.7	3.9	3.9	-5538.3	1197.1	-2652.1	37.5	185.7	36.5
285	ok	0.16	0.1	2.20e-02	5.7	5.7	3.9	3.9	-4509.1	1053.7	-3287.2	-18.7	62.2	20.5
286	ok	0.16	0.1	2.32e-02	5.7	5.7	3.9	3.9	-3997.0	773.4	-4069.7	-28.4	-84.5	3.0
287	ok	0.16	0.2	2.49e-02	5.7	5.7	3.9	3.9	-6345.7	-727.2	-3650.8	118.0	-118.2	-7.1
288	ok	0.16	0.2	2.09e-02	5.7	5.7	3.9	3.9	-7038.9	-1943.3	-2646.3	33.2	389.5	-66.7
289	ok	0.16	0.3	2.57e-02	5.7	5.7	3.9	3.9	-6533.0	-8153.8	-2418.5	64.9	533.0	-102.0
290	ok	0.16	0.2	1.92e-02	5.7	5.7	3.9	3.9	-5313.8	1499.7	-2174.5	19.8	238.1	-28.0
291	ok	0.16	0.1	1.66e-02	5.7	5.7	3.9	3.9	-5179.7	1576.0	-2521.6	11.5	139.1	-37.2
292	ok	0.16	0.1	1.70e-02	5.7	5.7	3.9	3.9	-6516.5	1415.6	-1062.3	-38.6	33.9	-37.5

Viale Duca Alessandro n. 11 – 43123 Parma
Cell. 335 1403156 – E mail ing.concari@gmail.com
Sito web: studioaire.it – P.IVA 02561480340

Nodo	Stato	x/d	V N/M	ver. rid	Af pr-	Af pr+	Af sec-	Af sec+	N z	N o	N zo	M z	M o	M zo
293	ok	0.16	0.1	1.85e-02	5.7	5.7	3.9	3.9	-6705.6	1086.7	-1520.6	-38.3	-25.6	-43.7
Nodo		**x/d**	**V N/M**	**ver. rid**	**Af pr-**	**Af pr+**	**Af sec-**	**Af sec+**	**N z**	**N o**	**N zo**	**M z**	**M o**	**M zo**
									-1.752e+04	-9359.44	-4282.67	-153.49	-443.07	-164.37
		0.16	0.38	0.06	5.65	5.65	3.93	3.93	3221.52	3930.40	1904.44	492.36	1133.81	189.78

Nodo	Stato	Max tau	Ver V pr	Ver V sec	Af V pr	Af V sec	V pr	V sec
		daN/cm2					daN/ m	daN/ m
16	ok	0.36						
17	ok	0.40						
77	ok	0.51						
78	ok	0.51						
79	ok	0.49						
80	ok	0.37						
151	ok	0.70						
152	ok	0.43						
153	ok	0.96						
154	ok	0.35						
158	ok	0.23						
159	ok	0.16						
160	ok	0.25						
161	ok	0.51						
197	ok	0.43						
198	ok	0.96						
199	ok	0.35						
200	ok	0.23						
201	ok	0.16						
202	ok	0.25						
203	ok	0.50						
267	ok	0.84						
268	ok	0.86						
269	ok	0.70						
270	ok	0.61						
271	ok	0.64						
272	ok	0.65						
273	ok	0.55						
274	ok	0.84						
275	ok	1.37						
276	ok	0.70						
277	ok	0.61						
278	ok	0.64						
279	ok	0.65						
280	ok	0.55						
281	ok	0.68						
282	ok	1.37						
283	ok	0.46						
284	ok	0.49						
285	ok	0.51						
286	ok	0.46						
287	ok	0.70						
288	ok	0.68						
289	ok	1.27						
290	ok	0.37						
291	ok	0.22						
292	ok	0.15						
293	ok	0.25						
Nodo		**Max tau**	**Ver V pr**	**Ver V sec**	**Af V pr**	**Af V sec**	**V pr**	**V sec**
		1.37						

Macro Setto	Spessore	Id Materiale	Id Criterio	Progettazione
	cm			
7	25.00	1	1	Singolo elemento NON DISSIPATIVO

Nodo	Stato	x/d	V N/M	ver. rid	Af pr-	Af pr+	Af sec-	Af sec+	N z	N o	N zo	M z	M o	M zo
									daN/ m	daN/ m	daN/ m	daN	daN	daN
15	ok	0.16	0.2	8.89e-03	5.7	5.7	3.9	3.9	2820.4	-177.3	-757.8	-304.0	37.9	-1.8
16	ok	0.16	0.2	1.02e-02	5.7	5.7	3.9	3.9	4445.0	1165.0	1566.0	-183.5	-1.0	38.5
28	ok	0.16	0.3	2.26e-02	5.7	5.7	3.9	3.9	-8503.2	-1962.3	-1513.0	-1240.0	-259.3	39.6
34	ok	0.16	0.4	2.71e-02	5.7	5.7	3.9	3.9	-9465.1	-2201.0	-3072.9	-1901.5	-404.5	-72.5
40	ok	0.16	0.5	2.76e-02	5.7	5.7	3.9	3.9	-7364.2	-1165.9	-4353.9	-2118.9	-444.3	-154.2
46	ok	0.16	0.6	2.33e-02	5.7	5.7	3.9	3.9	-5157.3	-998.6	4288.4	-2076.9	-422.4	99.9
52	ok	0.16	0.6	2.13e-02	5.7	5.7	3.9	3.9	-4569.6	-1199.8	4360.9	-2164.1	-430.7	84.7
58	ok	0.16	0.5	2.15e-02	5.7	5.7	3.9	3.9	-5873.1	-1801.7	3826.6	-2135.0	-427.4	61.4
64	ok	0.16	0.5	2.12e-02	5.7	5.7	3.9	3.9	-7382.4	-1359.9	2214.7	-1918.2	-395.0	17.1
70	ok	0.16	0.4	2.01e-02	5.7	5.7	3.9	3.9	-6954.0	-1575.1	2341.3	-1515.2	-313.0	8.7
76	ok	0.16	0.3	1.67e-02	5.7	5.7	3.9	3.9	3729.3	4118.8	1151.0	-676.0	-149.0	23.4
92	ok	0.16	0.2	1.00e-02	5.7	5.7	3.9	3.9	-3372.9	1659.2	-1352.6	-172.6	-18.5	-194.5
94	ok	0.16	0.2	1.51e-02	5.7	5.7	3.9	3.9	-5330.3	891.2	-1393.8	-39.7	-222.0	-171.6
96	ok	0.16	0.3	1.88e-02	5.7	5.7	3.9	3.9	-7324.9	-217.6	645.4	-96.8	-801.8	-88.9
98	ok	0.16	0.3	2.19e-02	5.7	5.7	3.9	3.9	-8501.2	-139.9	882.4	-126.1	-908.8	41.4
100	ok	0.16	0.3	2.70e-02	5.7	5.7	3.9	3.9	-9504.8	-958.6	1343.9	-100.0	-785.9	181.1
102	ok	0.16	0.2	4.80e-02	5.7	5.7	3.9	3.9	-1.127e+04	-8500.6	-1726.4	259.1	-91.6	172.7
104	ok	0.16	0.4	6.15e-02	5.7	5.7	3.9	3.9	-1.400e+04	1.083e+04	1370.1	1.5	-111.4	180.5
204	ok	0.16	0.2	2.39e-02	5.7	5.7	3.9	3.9	-5280.5	-3391.9	3321.4	207.4	129.1	356.4
205	ok	0.16	0.5	3.16e-02	5.7	5.7	3.9	3.9	-3280.7	1.404e+04	-2646.1	135.0	60.8	247.1
206	ok	0.16	0.2	2.57e-02	5.7	5.7	3.9	3.9	-7813.0	-1228.2	1854.0	287.7	178.5	384.3
207	ok	0.16	0.1	1.95e-02	5.7	5.7	3.9	3.9	-7378.9	-767.3	1306.2	359.2	203.5	60.6
208	ok	0.16	0.2	1.79e-02	5.7	5.7	3.9	3.9	-6275.8	-559.5	1269.8	361.5	229.4	-269.3

Viale Duca Alessandro n. 11 – 43123 Parma
Cell. 335 1403156 – E mail ing.concari@gmail.com
Sito web: studioaire.it – P.IVA 02561480340

Nodo	Stato	x/d	V N/M	ver. rid	Af pr-	Af pr+	Af sec-	Af sec+	N z	N o	N zo	M z	M o	M zo
209	ok	0.16	0.2	1.91e-02	5.7	5.7	3.9	3.9	-5621.7	772.1	-577.4	191.9	189.0	-365.6
210	ok	0.16	0.2	2.28e-02	5.7	5.7	3.9	3.9	-8771.0	1095.9	-1320.9	-421.4	-120.9	-295.9
211	ok	0.16	0.3	2.13e-02	5.7	5.7	3.9	3.9	1957.7	-3436.9	-6395.1	246.0	118.6	283.5
212	ok	0.16	0.5	2.98e-02	5.7	5.7	3.9	3.9	1384.0	8846.4	-6862.6	-17.8	-43.7	254.5
213	ok	0.16	0.3	1.82e-02	5.7	5.7	3.9	3.9	-4776.3	-1812.5	1655.3	669.3	434.4	297.9
214	ok	0.16	0.2	1.69e-02	5.7	5.7	3.9	3.9	-4771.2	-664.8	1698.9	800.7	516.6	46.4
215	ok	0.16	0.2	1.80e-02	5.7	5.7	3.9	3.9	-6188.9	-570.4	1517.5	755.1	487.7	-228.4
216	ok	0.16	0.2	2.08e-02	5.7	5.7	3.9	3.9	-5933.8	297.0	1771.4	387.7	295.3	-392.9
217	ok	0.16	0.2	2.58e-02	5.7	5.7	3.9	3.9	-9817.0	1055.8	-1814.9	-619.5	-152.0	-257.7
218	ok	0.16	0.3	1.67e-02	5.7	5.7	3.9	3.9	-3107.7	-1184.2	4232.8	231.8	239.7	176.7
219	ok	0.16	0.3	2.24e-02	5.7	5.7	3.9	3.9	-2019.3	-6799.0	3430.7	-25.4	124.1	117.1
220	ok	0.16	0.3	1.70e-02	5.7	5.7	3.9	3.9	-3032.4	-1302.0	4349.1	502.0	365.8	115.4
221	ok	0.16	0.3	1.65e-02	5.7	5.7	3.9	3.9	-3829.0	-943.2	2581.4	1074.4	643.4	20.9
222	ok	0.16	0.2	1.68e-02	5.7	5.7	3.9	3.9	-4482.7	-855.8	2487.1	985.9	588.8	-156.5
223	ok	0.16	0.2	2.18e-02	5.7	5.7	3.9	3.9	-5793.0	125.1	-3898.8	321.9	160.5	-169.9
224	ok	0.16	0.3	2.72e-02	5.7	5.7	3.9	3.9	-9491.2	846.9	-3604.4	-616.0	-160.1	-193.9
225	ok	0.16	0.2	1.59e-02	5.7	5.7	3.9	3.9	-942.2	-3852.1	1535.4	244.8	258.8	38.8
226	ok	0.16	0.2	2.40e-02	5.7	5.7	3.9	3.9	-1360.4	-8294.4	2599.5	0.8	148.3	24.2
227	ok	0.16	0.3	1.57e-02	5.7	5.7	3.9	3.9	-2624.2	-596.9	4228.5	578.5	393.2	47.4
228	ok	0.16	0.3	1.69e-02	5.7	5.7	3.9	3.9	-2007.1	-649.3	4246.8	742.5	451.4	-8.9
229	ok	0.16	0.3	1.83e-02	5.7	5.7	3.9	3.9	-2085.6	-557.9	4244.9	687.0	405.2	-58.6
230	ok	0.16	0.2	2.04e-02	5.7	5.7	3.9	3.9	-5623.9	459.5	-4442.3	443.6	178.0	-81.1
231	ok	0.16	0.3	2.37e-02	5.7	5.7	3.9	3.9	-5808.2	636.6	-4466.1	-441.1	-84.4	-91.2
232	ok	0.16	0.2	1.51e-02	5.7	5.7	3.9	3.9	-1101.3	-4375.4	2314.2	292.2	296.7	-1.0
233	ok	0.16	0.1	2.35e-02	5.7	5.7	3.9	3.9	-1467.8	-8254.1	2272.2	11.5	224.3	-6.8
234	ok	0.16	0.3	1.54e-02	5.7	5.7	3.9	3.9	-1037.9	-2027.6	2157.4	531.9	356.8	12.6
235	ok	0.16	0.3	1.59e-02	5.7	5.7	3.9	3.9	-2789.1	-516.5	4380.6	779.5	444.5	-2.4
236	ok	0.16	0.3	1.74e-02	5.7	5.7	3.9	3.9	-3313.6	-610.7	4472.1	770.0	371.6	-2.7
237	ok	0.16	0.2	1.93e-02	5.7	5.7	3.9	3.9	-3352.7	-481.8	4379.8	367.5	221.5	-0.4
238	ok	0.16	0.2	2.13e-02	5.7	5.7	3.9	3.9	-6148.7	-511.5	4104.8	-605.4	-106.8	47.0
239	ok	0.16	0.2	1.41e-02	5.7	5.7	3.9	3.9	-843.7	-4422.3	1941.5	277.3	300.2	-22.6
240	ok	0.16	0.2	2.16e-02	5.7	5.7	3.9	3.9	-881.4	-7939.5	1167.4	14.9	232.2	-20.7
241	ok	0.16	0.3	1.46e-02	5.7	5.7	3.9	3.9	-880.4	-1825.8	2637.4	507.2	352.7	14.5
242	ok	0.16	0.3	1.52e-02	5.7	5.7	3.9	3.9	-2897.5	-635.4	3900.4	743.9	417.0	20.5
243	ok	0.16	0.3	1.66e-02	5.7	5.7	3.9	3.9	-3843.5	-746.3	3835.8	720.7	353.9	79.0
244	ok	0.16	0.2	1.86e-02	5.7	5.7	3.9	3.9	-3817.5	-436.7	3714.4	350.1	200.5	110.9
245	ok	0.16	0.2	2.16e-02	5.7	5.7	3.9	3.9	-6948.8	-580.8	3439.3	-648.0	-113.4	110.8
246	ok	0.16	0.3	1.41e-02	5.7	5.7	3.9	3.9	-2432.1	-1466.4	-3485.2	245.8	228.0	-208.4
247	ok	0.16	0.2	2.09e-02	5.7	5.7	3.9	3.9	-1005.0	-6765.7	1095.2	12.8	171.3	-48.6
248	ok	0.16	0.3	1.44e-02	5.7	5.7	3.9	3.9	-2320.6	42.9	-3538.6	531.0	358.6	-140.9
249	ok	0.16	0.3	1.43e-02	5.7	5.7	3.9	3.9	-1373.8	-1299.7	3811.9	506.1	298.1	62.2
250	ok	0.16	0.3	1.51e-02	5.7	5.7	3.9	3.9	-3651.6	-1461.3	-2678.1	975.2	609.9	157.1
251	ok	0.16	0.2	1.78e-02	5.7	5.7	3.9	3.9	-3430.3	-803.3	-3006.6	643.2	456.5	269.4
252	ok	0.16	0.2	2.10e-02	5.7	5.7	3.9	3.9	-6687.9	-844.9	2920.5	-559.9	-87.6	182.5
253	ok	0.16	0.3	1.98e-02	5.7	5.7	3.9	3.9	-2290.4	-1827.3	-3743.0	159.5	125.6	-280.4
254	ok	0.16	0.4	3.23e-02	5.7	5.7	3.9	3.9	-1475.0	-5825.3	-3411.6	-16.2	38.5	-171.5
255	ok	0.16	0.3	1.52e-02	5.7	5.7	3.9	3.9	-4756.5	-1968.7	-2128.7	602.1	426.6	-276.6
256	ok	0.16	0.3	1.55e-02	5.7	5.7	3.9	3.9	-4605.8	-1460.1	-2190.8	729.7	492.3	-33.7
257	ok	0.16	0.3	1.54e-02	5.7	5.7	3.9	3.9	-3699.4	-1920.4	-2645.3	708.8	449.7	216.1
258	ok	0.16	0.3	1.67e-02	5.7	5.7	3.9	3.9	-5740.7	-714.4	-1402.0	494.2	347.3	430.3
259	ok	0.16	0.2	1.97e-02	5.7	5.7	3.9	3.9	-5375.1	-85.8	-1853.7	-304.7	55.1	391.0
260	ok	0.16	0.3	3.04e-02	5.7	5.7	3.9	3.9	-9727.4	-3802.2	-3629.7	304.6	114.4	-513.4
261	ok	0.16	0.5	3.45e-02	5.7	5.7	3.9	3.9	1.134e+04	-6019.5	3177.5	-26.5	-76.3	-238.0
262	ok	0.16	0.2	2.94e-02	5.7	5.7	3.9	3.9	-1.059e+04	-1645.2	-2996.2	415.1	122.9	-353.9
263	ok	0.16	0.2	2.13e-02	5.7	5.7	3.9	3.9	-8101.7	-1366.0	-1330.1	393.6	102.1	-39.0
264	ok	0.16	0.2	1.71e-02	5.7	5.7	3.9	3.9	-5856.8	-1302.2	-1133.6	349.5	108.9	287.6
265	ok	0.16	0.3	1.56e-02	5.7	5.7	3.9	3.9	-4993.5	-822.4	-1107.1	238.3	108.1	540.5
266	ok	0.16	0.2	1.76e-02	5.7	5.7	3.9	3.9	-4213.2	108.4	-1594.2	-133.4	-25.9	528.0
267	ok	0.16	0.3	4.58e-02	5.7	5.7	3.9	3.9	-1.308e+04	-5836.0	-3966.3	141.6	-544.2	-211.0
268	ok	0.16	0.4	5.99e-02	5.7	5.7	3.9	3.9	-1.735e+04	2578.3	-4860.4	-48.2	-122.5	-86.7
269	ok	0.16	0.4	3.22e-02	5.7	5.7	3.9	3.9	-9861.2	-1479.7	-1697.3	-131.6	-962.8	-148.3
270	ok	0.16	0.4	2.46e-02	5.7	5.7	3.9	3.9	-9491.0	-1040.2	-1213.0	-160.4	-1132.7	-28.8
271	ok	0.16	0.3	2.00e-02	5.7	5.7	3.9	3.9	-7754.8	-831.4	-804.2	-120.2	-1053.3	78.8
272	ok	0.16	0.3	1.55e-02	5.7	5.7	3.9	3.9	-6013.5	-889.9	-570.4	-116.0	-768.9	172.7
273	ok	0.16	0.2	1.12e-02	5.7	5.7	3.9	3.9	-4083.9	-387.8	-628.9	-112.1	-309.2	206.3
Nodo		**x/d**	**V N/M**	**ver. rid**	**Af pr-**	**Af pr+**	**Af sec-**	**Af sec+**	**N z**	**N o**	**N zo**	**M z**	**M o**	**M zo**
									-1.735e+04	-8500.63	-6862.63	-2164.09	-1132.69	-513.37
		0.16	0.56	0.06	5.65	5.65	3.93	3.93	1.134e+04	1.404e+04	4472.06	1074.38	643.36	540.52

Nodo	Stato	Max tau	Ver V pr	Ver V sec	Af V pr	Af V sec	V pr	V sec
		daN/cm2					daN/ m	daN/ m
15	ok	0.88						
16	ok	0.53						
28	ok	1.60						
34	ok	2.08						
40	ok	2.24						
46	ok	2.25						
52	ok	2.25						
58	ok	2.23						
64	ok	2.12						
70	ok	1.85						
76	ok	1.31						
92	ok	1.08						
94	ok	1.13						
96	ok	1.22						
98	ok	1.19						
100	ok	1.15						
102	ok	0.83						
104	ok	0.62						
204	ok	0.83						
205	ok	0.62						

Viale Duca Alessandro n. 11 – 43123 Parma
Cell. 335 1403156 – E mail ing.concari@gmail.com
Sito web: studioaire.it – P.IVA 02561480340

Nodo	Stato	Max tau	Ver V pr	Ver V sec	Af V pr	Af V sec	V pr	V sec
206	ok	1.15						
207	ok	1.19						
208	ok	1.22						
209	ok	1.13						
210	ok	1.57						
211	ok	0.63						
212	ok	0.63						
213	ok	0.65						
214	ok	0.68						
215	ok	0.68						
216	ok	1.20						
217	ok	2.02						
218	ok	0.75						
219	ok	0.75						
220	ok	0.56						
221	ok	0.43						
222	ok	0.70						
223	ok	1.39						
224	ok	2.20						
225	ok	0.82						
226	ok	0.83						
227	ok	0.59						
228	ok	0.33						
229	ok	0.75						
230	ok	1.45						
231	ok	2.25						
232	ok	0.82						
233	ok	0.83						
234	ok	0.59						
235	ok	0.30						
236	ok	0.75						
237	ok	1.45						
238	ok	2.25						
239	ok	0.77						
240	ok	0.79						
241	ok	0.57						
242	ok	0.34						
243	ok	0.74						
244	ok	1.44						
245	ok	2.23						
246	ok	0.71						
247	ok	0.72						
248	ok	0.54						
249	ok	0.46						
250	ok	0.67						
251	ok	1.33						
252	ok	2.11						
253	ok	0.61						
254	ok	0.58						
255	ok	0.69						
256	ok	0.74						
257	ok	0.77						
258	ok	1.08						
259	ok	1.85						
260	ok	0.94						
261	ok	0.77						
262	ok	1.24						
263	ok	1.31						
264	ok	1.34						
265	ok	1.25						
266	ok	1.32						
267	ok	0.94						
268	ok	0.77						
269	ok	1.24						
270	ok	1.31						
271	ok	1.34						
272	ok	1.25						
273	ok	0.72						
Nodo		Max tau	Ver V pr	Ver V sec	Af V pr	Af V sec	V pr	V sec
		2.25						

Macro Guscio	Spessore	Id Materiale	Id Criterio	Progettazione
	cm			
3	40.00	1	2	Singolo elemento

Nodo	Stato	x/d	V N/M	ver. rid	Af pr-	Af pr+	Af sec-	Af sec+	N x	N y	N xy	M x	M y	M xy
									daN/ m	daN/ m	daN/ m	daN	daN	daN
15	ok	0.09	0.2	5.72e-03	5.7	5.7	5.7	5.7	127.3	1456.3	-1935.0	-398.9	-468.6	265.4
16	ok	0.09	0.1	3.67e-03	5.7	5.7	5.7	5.7	476.0	1804.4	1951.0	-141.3	-331.6	-186.3
17	ok	0.09	0.1	5.04e-03	5.7	5.7	5.7	5.7	215.4	42.1	475.5	-233.3	-117.9	-199.7
18	ok	0.09	0.1	5.00e-03	5.7	5.7	5.7	5.7	-578.7	-661.2	-674.8	-413.3	-288.9	296.0
19	ok	0.09	0.2	8.57e-03	5.7	5.7	5.7	5.7	-1500.0	-4980.1	-565.4	211.4	904.3	423.3
20	ok	0.09	0.3	9.80e-03	5.7	5.7	5.7	5.7	-3340.1	-2290.3	-1158.6	2090.5	2054.2	160.4
21	ok	0.09	0.3	7.63e-03	5.7	5.7	5.7	5.7	-1347.0	-1728.9	200.2	-558.1	-487.0	633.5
22	ok	0.09	0.2	1.06e-02	5.7	5.7	5.7	5.7	229.1	4082.8	-1151.1	-1297.9	-145.6	-207.3
23	ok	0.09	0.4	1.08e-02	5.7	5.7	5.7	5.7	-2195.7	-1904.9	-2089.4	2850.5	2110.7	-297.4
24	ok	0.09	0.2	1.10e-02	5.7	5.7	5.7	5.7	834.1	4686.8	-1677.3	-1065.2	-356.6	-209.4
25	ok	0.09	0.4	9.35e-03	5.7	5.7	5.7	5.7	-1149.9	-3564.5	514.4	2588.2	1639.3	-596.2
26	ok	0.09	0.2	8.18e-03	5.7	5.7	5.7	5.7	-673.9	-3227.6	-1638.4	466.9	387.8	-645.4
27	ok	0.09	0.3	1.08e-02	5.7	5.7	5.7	5.7	-436.8	-3170.8	288.8	1659.8	870.5	-760.7

Viale Duca Alessandro n. 11 – 43123 Parma
Cell. 335 1403156 – E mail ing.concari@gmail.com
Sito web: studioaire.it – P.IVA 02561480340

Nodo	Stato	x/d	V N/M	ver. rid	Af pr-	Af pr+	Af sec-	Af sec+	N x	N y	N xy	M x	M y	M xy
28	ok	0.09	0.2	7.25e-03	5.7	5.7	5.7	5.7	5293.9	-1046.3	-2152.4	-512.2	-1341.6	-256.4
29	ok	0.09	0.4	1.42e-02	5.7	5.7	5.7	5.7	-4724.0	-1910.3	-915.5	2864.0	2322.7	-548.2
30	ok	0.09	0.2	3.57e-02	5.7	5.7	5.7	5.7	-7972.0	-508.5	662.9	2021.9	655.0	-966.1
31	ok	0.09	0.5	1.02e-02	5.7	5.7	5.7	5.7	-2201.9	-1254.4	-2575.0	3258.9	2491.3	-385.7
32	ok	0.09	0.4	9.47e-03	5.7	5.7	5.7	5.7	-946.9	-3684.0	51.8	2930.3	2034.2	-236.4
33	ok	0.09	0.3	1.09e-02	5.7	5.7	5.7	5.7	-12.0	-3160.3	22.1	1802.8	949.2	-238.2
34	ok	0.09	0.3	1.05e-02	5.7	5.7	5.7	5.7	7391.5	-1890.7	-1284.0	-525.8	-1993.1	-376.5
35	ok	0.09	0.4	1.44e-02	5.7	5.7	5.7	5.7	-4844.3	-1844.7	-1662.9	3382.7	1851.7	-318.6
36	ok	0.09	0.6	2.99e-02	5.7	5.7	5.7	5.7	-5493.2	-222.6	-1437.6	4117.4	238.9	-435.4
37	ok	0.09	0.4	1.00e-02	5.7	5.7	5.7	5.7	-2910.5	-2799.2	-1427.4	3156.8	2111.8	-159.0
38	ok	0.09	0.4	9.40e-03	5.7	5.7	5.7	5.7	-1242.2	-3735.3	134.8	2643.4	1700.9	340.8
39	ok	0.09	0.2	1.12e-02	5.7	5.7	5.7	5.7	-235.2	-3184.9	43.8	1499.6	496.7	542.2
40	ok	0.09	0.3	1.18e-02	5.7	5.7	5.7	5.7	7566.2	-2516.5	-1518.5	-622.5	-2336.7	-335.1
41	ok	0.09	0.4	1.77e-02	5.7	5.7	5.7	5.7	-8734.7	-2874.2	-2097.8	2385.3	1950.2	186.4
42	ok	0.09	0.6	3.22e-02	5.7	5.7	5.7	5.7	-1.624e+04	-1462.0	-1671.1	3449.0	366.2	132.3
43	ok	0.09	0.3	9.07e-03	5.7	5.7	5.7	5.7	-3083.1	-2058.4	-1429.8	1555.8	2054.6	57.8
44	ok	0.09	0.3	8.45e-03	5.7	5.7	5.7	5.7	2117.3	-844.0	1067.5	1921.4	1194.0	-206.2
45	ok	0.09	0.2	1.08e-02	5.7	5.7	5.7	5.7	1071.4	-2774.8	951.0	-421.9	-426.2	1171.9
46	ok	0.09	0.3	1.20e-02	5.7	5.7	5.7	5.7	-899.5	-5604.8	-1097.6	-495.9	-2334.9	515.9
47	ok	0.09	0.3	1.64e-02	5.7	5.7	5.7	5.7	-7006.5	-1716.4	60.6	628.5	1932.4	568.7
48	ok	0.09	0.2	3.84e-02	5.7	5.7	5.7	5.7	-9536.9	374.1	-2711.8	-2813.2	-1238.5	-21.0
49	ok	0.09	0.3	7.85e-03	5.7	5.7	5.7	5.7	-324.3	-1945.6	-56.8	1385.6	1840.3	-376.7
50	ok	0.09	0.3	8.98e-03	5.7	5.7	5.7	5.7	-3099.0	-840.4	643.3	-1765.6	-1567.1	605.8
51	ok	0.09	0.2	1.02e-02	5.7	5.7	5.7	5.7	1467.6	-2848.1	856.0	-1102.8	-1136.0	568.3
52	ok	0.09	0.3	1.19e-02	5.7	5.7	5.7	5.7	-203.0	-5603.1	-705.3	-601.1	-2261.3	336.6
53	ok	0.09	0.4	1.46e-02	5.7	5.7	5.7	5.7	-2386.0	-585.8	425.7	1454.9	2348.5	398.2
54	ok	0.09	0.2	1.04e-02	5.7	5.7	5.7	5.7	100.4	-996.5	1543.5	990.5	376.0	369.8
55	ok	0.09	0.4	8.77e-03	5.7	5.7	5.7	5.7	-932.4	-1639.3	47.4	1865.1	2076.2	-377.6
56	ok	0.09	0.3	7.36e-03	5.7	5.7	5.7	5.7	2362.0	-2111.5	292.6	-1617.9	-1195.1	217.0
57	ok	0.09	0.2	1.01e-02	5.7	5.7	5.7	5.7	1369.7	-3212.5	847.2	-1201.1	-1329.7	285.3
58	ok	0.09	0.3	1.19e-02	5.7	5.7	5.7	5.7	-531.4	-5490.5	2761.6	-616.4	-2284.9	112.8
59	ok	0.09	0.3	9.26e-03	5.7	5.7	5.7	5.7	-1710.8	-1266.5	1291.6	1314.9	2644.6	-16.6
60	ok	0.09	0.1	1.19e-02	5.7	5.7	5.7	5.7	-6188.9	-492.0	1958.6	391.8	672.3	-103.0
61	ok	0.09	0.4	8.83e-03	5.7	5.7	5.7	5.7	-2412.1	-1174.0	1815.1	1468.1	2572.8	-69.9
62	ok	0.09	0.2	8.41e-03	5.7	5.7	5.7	5.7	2845.4	-1379.1	553.9	-813.4	-1107.9	228.0
63	ok	0.09	0.2	9.98e-03	5.7	5.7	5.7	5.7	2323.8	-2393.5	1169.5	-722.3	-1007.7	59.3
64	ok	0.09	0.3	1.16e-02	5.7	5.7	5.7	5.7	7313.9	-2316.7	1192.7	-583.5	-2008.5	112.8
65	ok	0.09	0.3	9.88e-03	5.7	5.7	5.7	5.7	-2227.5	-2024.4	2308.8	1380.3	2542.0	-313.6
66	ok	0.09	0.1	1.19e-02	5.7	5.7	5.7	5.7	-2643.1	-1272.4	2647.5	591.7	410.1	-340.5
67	ok	0.09	0.3	9.83e-03	5.7	5.7	5.7	5.7	-2365.0	-1602.6	3103.4	1386.2	2435.6	40.5
68	ok	0.09	0.2	8.79e-03	5.7	5.7	5.7	5.7	2929.5	-254.4	927.4	-508.5	-948.4	142.3
69	ok	0.09	0.2	9.55e-03	5.7	5.7	5.7	5.7	2416.9	-2720.1	2721.9	-393.3	-724.1	308.7
70	ok	0.09	0.3	1.02e-02	5.7	5.7	5.7	5.7	5512.3	-2024.6	1183.5	-548.5	-1667.7	68.4
71	ok	0.09	0.2	1.04e-02	5.7	5.7	5.7	5.7	-2168.2	-3327.3	2278.9	1226.8	1841.2	-371.7
72	ok	0.09	0.1	9.60e-03	5.7	5.7	5.7	5.7	-2223.1	-1763.2	2306.7	572.8	299.4	-557.7
73	ok	0.09	0.3	1.18e-02	5.7	5.7	5.7	5.7	-2485.7	-3115.6	3059.0	1229.1	1748.8	108.9
74	ok	0.09	0.2	1.12e-02	5.7	5.7	5.7	5.7	-2793.9	-3218.4	-1843.7	584.1	394.0	382.3
75	ok	0.09	0.2	8.47e-03	5.7	5.7	5.7	5.7	2405.1	-1746.8	1406.3	-309.3	-500.3	307.2
76	ok	0.09	0.2	5.50e-03	5.7	5.7	5.7	5.7	5269.5	-890.4	2141.2	-404.6	-1085.5	55.9
77	ok	0.09	0.1	1.03e-02	5.7	5.7	5.7	5.7	-1445.9	-5788.7	1407.8	20.9	834.8	-285.5
78	ok	0.09	0.2	1.39e-02	5.7	5.7	5.7	5.7	-1821.5	-6272.4	3322.4	-11.0	763.6	165.1
79	ok	0.09	0.2	1.69e-02	5.7	5.7	5.7	5.7	-192.6	2952.2	355.2	-65.1	-499.3	-108.7
80	ok	0.09	0.2	9.36e-03	5.7	5.7	5.7	5.7	-790.9	-5188.3	1357.8	166.5	157.5	318.6
Nodo		**x/d**	**V N/M**	**ver. rid**	**Af pr-**	**Af pr+**	**Af sec-**	**Af sec+**	**N x**	**N y**	**N xy**	**M x**	**M y**	**M xy**
									-1.624e+04	-6272.44	-2711.79	-2813.15	-2336.72	-966.05
		0.09	0.57	0.04	5.65	5.65	5.65	5.65	7566.16	4686.85	3322.38	4117.43	2644.58	1171.89

Nodo	Stato	Max tau	Ver V pr	Ver V sec	Af V pr	Af V sec	V pr	V sec
		daN/cm2					daN/ m	daN/ m
15	ok	0.57						
16	ok	0.52						
17	ok	0.75						
18	ok	1.07						
19	ok	2.16						
20	ok	2.51						
21	ok	2.51						
22	ok	2.16						
23	ok	2.16						
24	ok	2.16						
25	ok	2.16						
26	ok	1.67						
27	ok	1.90						
28	ok	1.90						
29	ok	2.57						
30	ok	2.57						
31	ok	1.01						
32	ok	1.14						
33	ok	1.97						
34	ok	1.97						
35	ok	2.57						
36	ok	2.57						
37	ok	1.40						
38	ok	1.40						
39	ok	1.97						
40	ok	1.97						
41	ok	3.57						
42	ok	3.57						
43	ok	2.73						
44	ok	2.73						
45	ok	1.82						
46	ok	1.52						

Viale Duca Alessandro n. 11 – 43123 Parma
Cell. 335 1403156 – E mail ing.concari@gmail.com
Sito web: studioaire.it – P.IVA 02561480340

Nodo	Stato	Max tau	Ver V pr	Ver V sec	Af V pr	Af V sec	V pr	V sec
47	ok	3.57						
48	ok	3.57						
49	ok	2.73						
50	ok	2.73						
51	ok	1.82						
52	ok	1.37						
53	ok	2.02						
54	ok	2.02						
55	ok	1.27						
56	ok	1.48						
57	ok	1.48						
58	ok	1.47						
59	ok	1.87						
60	ok	1.87						
61	ok	1.62						
62	ok	1.62						
63	ok	1.47						
64	ok	1.47						
65	ok	1.87						
66	ok	1.87						
67	ok	1.62						
68	ok	1.62						
69	ok	1.38						
70	ok	1.38						
71	ok	1.66						
72	ok	1.66						
73	ok	1.55						
74	ok	1.55						
75	ok	1.23						
76	ok	1.23						
77	ok	1.50						
78	ok	1.50						
79	ok	1.01						
80	ok	0.63						
Nodo		**Max tau**	**Ver V pr**	**Ver V sec**	**Af V pr**	**Af V sec**	**V pr**	**V sec**
		3.57						

MODELLO LOCALE TECNICO

						M_T= 5	**Z=235.7**	**N=398**	**N=430**			
Trave	Note	Pos.	%Af	Af inf.	Af. sup	Af long.	x/d	V N/M	V V/T cls	V V/T acc	Staffe	Rif. cmb
		cm									L=cm	
61	ok,ok	0.0	0.64	4.0	4.0	0.0	0.19	0.10	0.05	6.85e-03	2d8/17 L=50	41,26,44
	s=1,m=1	25.0	0.64	4.0	4.0	0.0	0.19	0.10	0.05	4.40e-03	2d8/17 L=50	41,25,41
		50.0	0.64	4.0	4.0	0.0	0.19	0.11	0.06	7.93e-03	2d8/17 L=50	41,25,41
62	ok,ok	0.0	0.64	4.0	4.0	0.0	0.19	0.05	0.04	9.23e-03	2d8/17 L=50	41,25,41
	s=1,m=1	25.0	0.64	4.0	4.0	0.0	0.19	0.04	0.04	8.84e-03	2d8/17 L=50	41,25,44
		50.0	0.64	4.0	4.0	0.0	0.19	0.04	0.04	0.01	2d8/17 L=50	41,34,44
63	ok,ok	0.0	0.64	4.0	4.0	0.0	0.19	0.02	0.03	8.04e-03	2d8/17 L=50	46,5,41
	s=1,m=1	25.0	0.64	4.0	4.0	0.0	0.19	0.03	0.03	5.34e-03	2d8/17 L=50	46,5,44
		50.0	0.64	4.0	4.0	0.0	0.19	0.03	0.03	8.87e-03	2d8/17 L=50	46,5,44
64	ok,ok	0.0	0.64	4.0	4.0	0.0	0.19	0.03	0.04	0.01	2d8/17 L=50	44,28,44
	s=1,m=1	25.0	0.64	4.0	4.0	0.0	0.19	0.03	0.04	0.01	2d8/17 L=50	41,28,44
		50.0	0.64	4.0	4.0	0.0	0.19	0.02	0.03	9.40e-03	2d8/17 L=50	41,28,41
							M_T= 6	**Z=235.7**	**N=438**	**N=462**		
Trave	Note	Pos.	%Af	Af inf.	Af. sup	Af long.	x/d	V N/M	V V/T cls	V V/T acc	Staffe	Rif. cmb
65	ok,ok	0.0	0.64	4.0	4.0	0.0	0.19	0.03	0.04	0.02	2d8/17 L=50	25,44,44
	s=1,m=1	25.0	0.64	4.0	4.0	0.0	0.19	0.03	0.03	0.02	2d8/17 L=50	41,44,44
		50.0	0.64	4.0	4.0	0.0	0.19	0.04	0.03	0.01	2d8/17 L=50	41,44,41
66	ok,ok	0.0	0.64	4.0	4.0	0.0	0.19	0.15	0.04	0.02	2d8/17 L=50	44,46,47
	s=1,m=1	25.0	0.64	4.0	4.0	0.0	0.19	0.13	0.04	0.02	2d8/17 L=50	44,46,46
		50.0	0.64	4.0	4.0	0.0	0.19	0.13	0.05	0.03	2d8/17 L=50	44,46,46
67	ok,ok	0.0	0.64	4.0	4.0	0.0	0.19	0.27	0.05	8.93e-03	2d8/17 L=50	46,34,46
	s=1,m=1	25.0	0.64	4.0	4.0	0.0	0.19	0.26	0.05	5.40e-03	2d8/17 L=50	46,34,46
		50.0	0.64	4.0	4.0	0.0	0.19	0.25	0.05	8.82e-03	2d8/17 L=50	46,34,47
							M_T= 1	**Z=330.0**	**N=1**	**N=3**		
Trave	Note	Pos.	%Af	Af inf.	Af. sup	Af long.	x/d	V N/M	V V/T cls	V V/T acc	Staffe	Rif. cmb
6	ok,ok	0.0	0.64	4.0	4.0	0.0	0.19	0.05	0.16	0.14	2d8/17 L=49	28,53,8
	s=1,m=1	24.4	0.64	4.0	4.0	0.0	0.19	0.04	0.10	0.02	2d8/17 L=49	7,53,32
		48.9	0.64	4.0	4.0	0.0	0.19	0.02	0.15	0.11	2d8/17 L=49	55,53,5
10	ok,ok	0.0	0.64	4.0	4.0	0.0	0.19	0.01	0.19	0.12	2d8/17 L=49	56,41,8
	s=1,m=1	24.4	0.64	4.0	4.0	0.0	0.19	0.03	0.13	1.34e-03	2d8/17 L=49	7,41,37
		48.9	0.64	4.0	4.0	0.0	0.19	0.01	0.19	0.12	2d8/17 L=49	50,41,5
14	ok,ok	0.0	0.64	4.0	4.0	0.0	0.19	0.02	0.19	0.12	2d8/17 L=49	50,41,8
	s=1,m=1	24.4	0.64	4.0	4.0	0.0	0.19	0.03	0.13	2.59e-04	2d8/17 L=49	50,41,5
		48.9	0.64	4.0	4.0	0.0	0.19	0.02	0.19	0.12	2d8/17 L=49	50,41,5
18	ok,ok	0.0	0.64	4.0	4.0	0.0	0.19	0.02	0.16	0.12	2d8/17 L=49	50,41,8
	s=1,m=1	24.4	0.64	4.0	4.0	0.0	0.19	0.04	0.10	2.24e-04	2d8/17 L=49	50,41,5
		48.9	0.64	4.0	4.0	0.0	0.19	0.02	0.16	0.12	2d8/17 L=49	50,41,5
22	ok,ok	0.0	0.64	4.0	4.0	0.0	0.19	0.02	0.14	0.12	2d8/17 L=49	52,8,8
	s=1,m=1	24.4	0.64	4.0	4.0	0.0	0.19	0.04	0.08	2.05e-04	2d8/17 L=49	52,51,5
		48.9	0.64	4.0	4.0	0.0	0.19	0.02	0.14	0.12	2d8/17 L=49	52,8,5
26	ok,ok	0.0	0.64	4.0	4.0	0.0	0.19	0.03	0.12	0.12	2d8/17 L=49	56,8,7
	s=1,m=1	24.4	0.64	4.0	4.0	0.0	0.19	0.04	0.06	6.82e-04	2d8/17 L=49	50,55,53
		48.9	0.64	4.0	4.0	0.0	0.19	0.03	0.12	0.12	2d8/17 L=49	56,8,6

Viale Duca Alessandro n. 11 – 43123 Parma
Cell. 335 1403156 – E mail ing.concari@gmail.com
Sito web: studioaire.it – P.IVA 02561480340

30	ok,ok	0.0	0.64	4.0	4.0	0.0	0.19	0.04	0.13	0.12	2d8/17 L=49	53,8,6
	s=1,m=1	24.4	0.64	4.0	4.0	0.0	0.19	0.05	0.05	2.26e-04	2d8/17 L=49	53,52,52
		48.9	0.64	4.0	4.0	0.0	0.19	0.04	0.13	0.12	2d8/17 L=49	53,8,7
34	ok,ok	0.0	0.64	4.0	4.0	0.0	0.19	0.03	0.13	0.12	2d8/17 L=49	56,6,6
	s=1,m=1	24.4	0.64	4.0	4.0	0.0	0.19	0.05	0.03	2.23e-04	2d8/17 L=49	56,50,34
		48.9	0.64	4.0	4.0	0.0	0.19	0.03	0.13	0.12	2d8/17 L=49	56,5,7
38	ok,ok	0.0	0.64	4.0	4.0	0.0	0.19	0.03	0.12	0.12	2d8/17 L=49	52,6,7
	s=1,m=1	24.4	0.64	4.0	4.0	0.0	0.19	0.05	0.02	8.38e-04	2d8/17 L=49	52,50,50
		48.9	0.64	4.0	4.0	0.0	0.19	0.03	0.12	0.12	2d8/17 L=49	52,6,6
42	ok,ok	0.0	0.64	4.0	4.0	0.0	0.19	0.02	0.12	0.12	2d8/17 L=49	56,6,5
	s=1,m=1	24.4	0.64	4.0	4.0	0.0	0.19	0.04	9.72e-03	1.94e-04	2d8/17 L=49	53,30,38
		48.9	0.64	4.0	4.0	0.0	0.19	0.02	0.12	0.12	2d8/17 L=49	56,6,8
46	ok,ok	0.0	0.64	4.0	4.0	0.0	0.19	0.03	0.12	0.12	2d8/17 L=49	41,8,6
	s=1,m=1	24.4	0.64	4.0	4.0	0.0	0.19	0.05	0.02	8.75e-04	2d8/17 L=49	41,41,44
		48.9	0.64	4.0	4.0	0.0	0.19	0.04	0.12	0.12	2d8/17 L=49	41,8,7
50	ok,ok	0.0	0.64	4.0	4.0	0.0	0.19	0.04	0.12	0.12	2d8/17 L=49	41,5,7
	s=1,m=1	24.4	0.64	4.0	4.0	0.0	0.19	0.06	0.02	6.41e-04	2d8/17 L=49	41,41,44
		48.9	0.64	4.0	4.0	0.0	0.19	0.04	0.12	0.12	2d8/17 L=49	41,5,6
53	ok,ok	0.0	0.64	4.0	4.0	0.0	0.19	0.02	0.12	0.12	2d8/17 L=49	52,8,7
	s=1,m=1	24.4	0.64	4.0	4.0	0.0	0.19	0.04	0.05	4.39e-04	2d8/17 L=49	52,41,44
		48.9	0.64	4.0	4.0	0.0	0.19	0.02	0.12	0.12	2d8/17 L=49	52,8,6
55	ok,ok	0.0	0.64	4.0	4.0	0.0	0.19	0.02	0.12	0.12	2d8/17 L=49	52,8,5
	s=1,m=1	24.4	0.64	4.0	4.0	0.0	0.19	0.03	0.06	1.57e-04	2d8/17 L=49	52,47,54
		48.9	0.64	4.0	4.0	0.0	0.19	0.02	0.12	0.12	2d8/17 L=49	52,8,8
57	ok,ok	0.0	0.64	4.0	4.0	0.0	0.19	0.02	0.14	0.12	2d8/17 L=49	52,55,5
	s=1,m=1	24.4	0.64	4.0	4.0	0.0	0.19	0.03	0.09	8.33e-04	2d8/17 L=49	56,55,44
		48.9	0.64	4.0	4.0	0.0	0.19	0.02	0.14	0.12	2d8/17 L=49	52,55,8
59	ok,ok	0.0	0.64	4.0	4.0	0.0	0.19	0.01	0.17	0.12	2d8/17 L=49	52,55,5
	s=1,m=1	24.4	0.64	4.0	4.0	0.0	0.19	0.03	0.11	2.24e-03	2d8/17 L=49	7,55,44
		48.9	0.64	4.0	4.0	0.0	0.19	0.01	0.17	0.13	2d8/17 L=49	56,55,8
1	ok,ok	0.0	0.64	4.0	4.0	0.0	0.19	0.01	0.19	0.12	2d8/17 L=49	42,55,5
	s=1,m=1	24.4	0.64	4.0	4.0	0.0	0.19	0.04	0.13	5.33e-03	2d8/17 L=49	7,55,42
		48.9	0.64	4.0	4.0	0.0	0.19	0.02	0.19	0.13	2d8/17 L=49	42,55,8
3	ok,ok	0.0	0.64	4.0	4.0	0.0	0.19	0.03	0.19	0.13	2d8/17 L=49	46,47,6
	s=1,m=1	24.4	0.64	4.0	4.0	0.0	0.19	0.06	0.13	0.02	2d8/17 L=49	6,47,42
		48.9	0.64	4.0	4.0	0.0	0.19	0.02	0.17	0.12	2d8/17 L=49	46,43,7
							M_T= 2	**Z=330.0**	**N=2**	**N=694**		
Trave	Note	Pos.	%Af	Af inf.	Af. sup	Af long.	x/d	V N/M	V V/T cls	V V/T acc	Staffe	Rif. cmb
8	ok,ok	0.0	0.64	4.0	4.0	0.0	0.19	0.06	0.22	0.15	2d8/17 L=49	40,8,8
	s=1,m=1	24.4	0.64	4.0	4.0	0.0	0.19	0.04	0.10	0.02	2d8/17 L=49	7,31,39
		48.9	0.64	4.0	4.0	0.0	0.19	0.03	0.18	0.11	2d8/17 L=49	50,5,5
12	ok,ok	0.0	0.64	4.0	4.0	0.0	0.19	0.03	0.18	0.12	2d8/17 L=49	52,5,8
	s=1,m=1	24.4	0.64	4.0	4.0	0.0	0.19	0.05	0.06	1.37e-03	2d8/17 L=49	52,5,30
		48.9	0.64	4.0	4.0	0.0	0.19	0.03	0.18	0.12	2d8/17 L=49	52,5,5
16	ok,ok	0.0	0.64	4.0	4.0	0.0	0.19	0.03	0.17	0.12	2d8/17 L=49	50,5,8
	s=1,m=1	24.4	0.64	4.0	4.0	0.0	0.19	0.05	0.05	3.60e-04	2d8/17 L=49	50,5,5
		48.9	0.64	4.0	4.0	0.0	0.19	0.03	0.17	0.12	2d8/17 L=49	50,5,5
20	ok,ok	0.0	0.64	4.0	4.0	0.0	0.19	0.05	0.16	0.12	2d8/17 L=49	50,5,7
	s=1,m=1	24.4	0.64	4.0	4.0	0.0	0.19	0.07	0.05	5.79e-04	2d8/17 L=49	50,5,56
		48.9	0.64	4.0	4.0	0.0	0.19	0.05	0.16	0.12	2d8/17 L=49	50,5,6
24	ok,ok	0.0	0.64	4.0	4.0	0.0	0.19	0.06	0.15	0.12	2d8/17 L=49	50,5,7
	s=1,m=1	24.4	0.64	4.0	4.0	0.0	0.19	0.08	0.04	3.79e-04	2d8/17 L=49	50,5,6
		48.9	0.64	4.0	4.0	0.0	0.19	0.06	0.15	0.12	2d8/17 L=49	50,5,6
28	ok,ok	0.0	0.64	4.0	4.0	0.0	0.19	0.08	0.14	0.12	2d8/17 L=49	50,5,5
	s=1,m=1	24.4	0.64	4.0	4.0	0.0	0.19	0.09	0.03	6.13e-04	2d8/17 L=49	50,5,56
		48.9	0.64	4.0	4.0	0.0	0.19	0.08	0.14	0.12	2d8/17 L=49	50,5,8
32	ok,ok	0.0	0.64	4.0	4.0	0.0	0.19	0.09	0.15	0.12	2d8/17 L=49	50,5,6
	s=1,m=1	24.4	0.64	4.0	4.0	0.0	0.19	0.10	0.03	4.79e-04	2d8/17 L=49	50,5,46
		48.9	0.64	4.0	4.0	0.0	0.19	0.09	0.15	0.12	2d8/17 L=49	50,5,7
36	ok,ok	0.0	0.64	4.0	4.0	0.0	0.19	0.05	0.13	0.12	2d8/17 L=49	50,5,7
	s=1,m=1	24.4	0.64	4.0	4.0	0.0	0.19	0.07	0.01	2.53e-04	2d8/17 L=49	50,5,37
		48.9	0.64	4.0	4.0	0.0	0.19	0.06	0.13	0.12	2d8/17 L=49	50,5,6
40	ok,ok	0.0	0.64	4.0	4.0	0.0	0.19	0.10	0.13	0.12	2d8/17 L=49	50,6,7
	s=1,m=1	24.4	0.64	4.0	4.0	0.0	0.19	0.12	0.01	8.48e-04	2d8/17 L=49	50,33,46
		48.9	0.64	4.0	4.0	0.0	0.19	0.10	0.13	0.12	2d8/17 L=49	50,6,6
44	ok,ok	0.0	0.64	4.0	4.0	0.0	0.19	0.10	0.12	0.12	2d8/17 L=49	46,6,5
	s=1,m=1	24.4	0.64	4.0	4.0	0.0	0.19	0.11	0.01	7.59e-05	2d8/17 L=49	46,36,37
		48.9	0.64	4.0	4.0	0.0	0.19	0.10	0.12	0.12	2d8/17 L=49	46,6,8
48	ok,ok	0.0	0.64	4.0	4.0	0.0	0.19	0.11	0.13	0.12	2d8/17 L=49	42,5,6
	s=1,m=1	24.4	0.64	4.0	4.0	0.0	0.19	0.12	0.01	6.25e-04	2d8/17 L=49	42,36,56
		48.9	0.64	4.0	4.0	0.0	0.19	0.10	0.13	0.12	2d8/17 L=49	42,5,7
52	ok,ok	0.0	0.64	4.0	4.0	0.0	0.19	0.07	0.14	0.12	2d8/17 L=49	46,5,8
	s=1,m=1	24.4	0.64	4.0	4.0	0.0	0.19	0.08	0.02	4.57e-04	2d8/17 L=49	46,5,46
		48.9	0.64	4.0	4.0	0.0	0.19	0.06	0.14	0.12	2d8/17 L=49	46,5,5
54	ok,ok	0.0	0.64	4.0	4.0	0.0	0.19	0.07	0.15	0.12	2d8/17 L=49	50,5,6
	s=1,m=1	24.4	0.64	4.0	4.0	0.0	0.19	0.08	0.03	3.22e-04	2d8/17 L=49	50,5,53
		48.9	0.64	4.0	4.0	0.0	0.19	0.07	0.15	0.12	2d8/17 L=49	50,5,7
56	ok,ok	0.0	0.64	4.0	4.0	0.0	0.19	0.05	0.17	0.12	2d8/17 L=49	50,5,6
	s=1,m=1	24.4	0.64	4.0	4.0	0.0	0.19	0.06	0.05	7.63e-04	2d8/17 L=49	50,5,44
		48.9	0.64	4.0	4.0	0.0	0.19	0.05	0.17	0.12	2d8/17 L=49	50,5,7
58	ok,ok	0.0	0.64	4.0	4.0	0.0	0.19	0.04	0.17	0.13	2d8/17 L=49	50,5,6
	s=1,m=1	24.4	0.64	4.0	4.0	0.0	0.19	0.05	0.05	1.12e-03	2d8/17 L=49	50,5,46
		48.9	0.64	4.0	4.0	0.0	0.19	0.03	0.17	0.12	2d8/17 L=49	50,5,7
60	ok,ok	0.0	0.64	4.0	4.0	0.0	0.19	0.01	0.18	0.13	2d8/17 L=49	50,5,6
	s=1,m=1	24.4	0.64	4.0	4.0	0.0	0.19	0.03	0.06	2.60e-03	2d8/17 L=49	50,5,44
		48.9	0.64	4.0	4.0	0.0	0.19	8.11e-03	0.18	0.12	2d8/17 L=49	51,5,7
2	ok,ok	0.0	0.64	4.0	4.0	0.0	0.19	7.91e-03	0.18	0.13	2d8/17 L=49	8,5,6
	s=1,m=1	24.4	0.64	4.0	4.0	0.0	0.19	0.03	0.06	5.53e-03	2d8/17 L=49	7,5,44
		48.9	0.64	4.0	4.0	0.0	0.19	0.01	0.18	0.12	2d8/17 L=49	44,5,7
4	ok,ok	0.0	0.64	4.0	4.0	0.0	0.19	0.01	0.17	0.12	2d8/17 L=49	44,5,5
	s=1,m=1	24.4	0.64	4.0	4.0	0.0	0.19	0.03	0.07	0.02	2d8/17 L=49	7,6,44
		48.9	0.64	4.0	4.0	0.0	0.19	0.02	0.19	0.13	2d8/17 L=49	44,6,8
							M_T= 3	**Z=330.0**	**N=1**	**N=694**		
Trave	Note	Pos.	%Af	Af inf.	Af. sup	Af long.	x/d	V N/M	V V/T cls	V V/T acc	Staffe	Rif. cmb
5	ok,ok	0.0	0.64	4.0	4.0	0.0	0.19	0.03	0.15	0.02	2d8/17 L=50	40,39,31
	s=1,m=1	25.0	0.64	4.0	4.0	0.0	0.19	0.02	0.15	0.02	2d8/17 L=50	56,39,31
		50.0	0.64	4.0	4.0	0.0	0.19	0.01	0.16	0.02	2d8/17 L=50	56,39,31
9	ok,ok	0.0	0.64	4.0	4.0	0.0	0.19	0.02	0.16	4.45e-03	2d8/17 L=50	56,35,6

Viale Duca Alessandro n. 11 – 43123 Parma
Cell. 335 1403156 – E mail ing.concari@gmail.com
Sito web: studioaire.it – P.IVA 02561480340

	s=1,m=1	25.0	0.64	4.0	4.0	0.0	0.19	0.02	0.16	6.97e-04	2d8/17 L=50	56,35,39
		50.0	0.64	4.0	4.0	0.0	0.19	0.02	0.16	4.80e-03	2d8/17 L=50	56,35,3
13	ok,ok	0.0	0.64	4.0	4.0	0.0	0.19	0.03	0.13	4.48e-03	2d8/17 L=50	40,35,2
	s=1,m=1	25.0	0.64	4.0	4.0	0.0	0.19	0.03	0.13	2.03e-04	2d8/17 L=50	40,35,35
		50.0	0.64	4.0	4.0	0.0	0.19	0.03	0.13	4.77e-03	2d8/17 L=50	40,35,7
17	ok,ok	0.0	0.64	4.0	4.0	0.0	0.19	0.04	0.09	4.46e-03	2d8/17 L=50	40,27,2
	s=1,m=1	25.0	0.64	4.0	4.0	0.0	0.19	0.04	0.09	2.98e-04	2d8/17 L=50	36,27,31
		50.0	0.64	4.0	4.0	0.0	0.19	0.04	0.09	4.83e-03	2d8/17 L=50	36,27,7
21	ok,ok	0.0	0.64	4.0	4.0	0.0	0.19	0.05	0.06	4.51e-03	2d8/17 L=50	36,27,4
	s=1,m=1	25.0	0.64	4.0	4.0	0.0	0.19	0.04	0.05	1.69e-04	2d8/17 L=50	36,27,52
		50.0	0.64	4.0	4.0	0.0	0.19	0.05	0.06	4.70e-03	2d8/17 L=50	36,27,5
25	ok,ok	0.0	0.64	4.0	4.0	0.0	0.19	0.05	0.01	4.66e-03	2d8/17 L=50	40,31,8
	s=1,m=1	25.0	0.64	4.0	4.0	0.0	0.19	0.05	0.01	2.42e-04	2d8/17 L=50	40,31,56
		50.0	0.64	4.0	4.0	0.0	0.19	0.05	0.01	4.55e-03	2d8/17 L=50	40,31,1
29	ok,ok	0.0	0.64	4.0	4.0	0.0	0.19	0.05	0.04	4.67e-03	2d8/17 L=50	32,56,2
	s=1,m=1	25.0	0.64	4.0	4.0	0.0	0.19	0.04	0.03	2.18e-04	2d8/17 L=50	32,56,50
		50.0	0.64	4.0	4.0	0.0	0.19	0.05	0.04	4.52e-03	2d8/17 L=50	32,56,7
33	ok,ok	0.0	0.64	4.0	4.0	0.0	0.19	0.05	0.07	4.74e-03	2d8/17 L=50	36,39,5
	s=1,m=1	25.0	0.64	4.0	4.0	0.0	0.19	0.05	0.07	1.54e-04	2d8/17 L=50	40,39,29
		50.0	0.64	4.0	4.0	0.0	0.19	0.05	0.07	4.46e-03	2d8/17 L=50	40,39,4
37	ok,ok	0.0	0.64	4.0	4.0	0.0	0.19	0.04	0.11	4.83e-03	2d8/17 L=50	7,32,5
	s=1,m=1	25.0	0.64	4.0	4.0	0.0	0.19	0.04	0.10	5.17e-04	2d8/17 L=50	7,32,56
		50.0	0.64	4.0	4.0	0.0	0.19	0.04	0.11	4.42e-03	2d8/17 L=50	7,32,4
41	ok,ok	0.0	0.64	4.0	4.0	0.0	0.19	0.03	0.14	4.60e-03	2d8/17 L=50	7,28,7
	s=1,m=1	25.0	0.64	4.0	4.0	0.0	0.19	0.03	0.14	4.48e-04	2d8/17 L=50	7,28,53
		50.0	0.64	4.0	4.0	0.0	0.19	0.03	0.14	4.69e-03	2d8/17 L=50	7,28,2
45	ok,ok	0.0	0.64	4.0	4.0	0.0	0.19	0.02	0.16	4.03e-03	2d8/17 L=50	7,28,3
	s=1,m=1	25.0	0.64	4.0	4.0	0.0	0.19	0.02	0.16	1.83e-03	2d8/17 L=50	51,28,53
		50.0	0.64	4.0	4.0	0.0	0.19	0.03	0.16	5.38e-03	2d8/17 L=50	51,28,6
49	ok,ok	0.0	0.64	4.0	4.0	0.0	0.19	0.04	0.13	0.02	2d8/17 L=50	51,32,40
	s=1,m=1	25.0	0.64	4.0	4.0	0.0	0.19	0.04	0.13	0.01	2d8/17 L=50	51,32,40
		50.0	0.64	4.0	4.0	0.0	0.19	0.06	0.13	0.01	2d8/17 L=50	53,32,53
							M_T= 4	**Z=330.0**	**N=2**	**N=3**		
Trave	Note	Pos.	%Af	Af inf.	Af. sup	Af long.	x/d	V N/M	V V/T cls	V V/T acc	Staffe	Rif. cmb
7	ok,ok	0.0	0.64	4.0	4.0	0.0	0.19	0.09	0.05	0.03	2d8/17 L=50	44,44,44
	s=1,m=1	25.0	0.64	4.0	4.0	0.0	0.19	0.07	0.05	0.03	2d8/17 L=50	44,44,44
		50.0	0.64	4.0	4.0	0.0	0.19	0.08	0.06	0.03	2d8/17 L=50	44,44,44
11	ok,ok	0.0	0.64	4.0	4.0	0.0	0.19	0.17	0.03	7.21e-03	2d8/17 L=50	44,25,41
	s=1,m=1	25.0	0.64	4.0	4.0	0.0	0.19	0.17	0.03	9.19e-03	2d8/17 L=50	44,25,44
		50.0	0.64	4.0	4.0	0.0	0.19	0.18	0.03	0.01	2d8/17 L=50	44,28,44
15	ok,ok	0.0	0.64	4.0	4.0	0.0	0.19	0.20	0.04	9.86e-03	2d8/17 L=50	44,30,44
	s=1,m=1	25.0	0.64	4.0	4.0	0.0	0.19	0.19	0.03	6.33e-03	2d8/17 L=50	44,25,44
		50.0	0.64	4.0	4.0	0.0	0.19	0.18	0.04	5.27e-03	2d8/17 L=50	44,25,41
19	ok,ok	0.0	0.64	4.0	4.0	0.0	0.19	0.14	0.03	0.01	2d8/17 L=50	46,34,44
	s=1,m=1	25.0	0.64	4.0	4.0	0.0	0.19	0.13	0.03	9.74e-03	2d8/17 L=50	46,25,44
		50.0	0.64	4.0	4.0	0.0	0.19	0.12	0.04	0.01	2d8/17 L=50	46,25,41
23	ok,ok	0.0	0.64	4.0	4.0	0.0	0.19	0.09	0.03	8.88e-03	2d8/17 L=50	34,33,44
	s=1,m=1	25.0	0.64	4.0	4.0	0.0	0.19	0.09	0.03	6.57e-03	2d8/17 L=50	34,33,25
		50.0	0.64	4.0	4.0	0.0	0.19	0.09	0.03	0.01	2d8/17 L=50	38,33,25
27	ok,ok	0.0	0.64	4.0	4.0	0.0	0.19	0.16	0.03	3.25e-03	2d8/17 L=50	33,46,26
	s=1,m=1	25.0	0.64	4.0	4.0	0.0	0.19	0.16	0.04	7.09e-03	2d8/17 L=50	33,46,7
		50.0	0.64	4.0	4.0	0.0	0.19	0.17	0.04	0.01	2d8/17 L=50	33,46,7
31	ok,ok	0.0	0.64	4.0	4.0	0.0	0.19	0.17	0.02	5.10e-03	2d8/17 L=50	38,43,41
	s=1,m=1	25.0	0.64	4.0	4.0	0.0	0.19	0.17	0.02	6.46e-03	2d8/17 L=50	38,43,44
		50.0	0.64	4.0	4.0	0.0	0.19	0.17	0.02	9.99e-03	2d8/17 L=50	34,43,44
35	ok,ok	0.0	0.64	4.0	4.0	0.0	0.19	0.16	0.03	0.01	2d8/17 L=50	25,34,8
	s=1,m=1	25.0	0.64	4.0	4.0	0.0	0.19	0.15	0.02	9.78e-03	2d8/17 L=50	25,34,34
		50.0	0.64	4.0	4.0	0.0	0.19	0.15	0.02	6.25e-03	2d8/17 L=50	25,34,34
39	ok,ok	0.0	0.64	4.0	4.0	0.0	0.19	0.11	0.04	0.02	2d8/17 L=50	25,34,46
	s=1,m=1	25.0	0.64	4.0	4.0	0.0	0.19	0.10	0.04	0.02	2d8/17 L=50	25,34,46
		50.0	0.64	4.0	4.0	0.0	0.19	0.10	0.04	0.02	2d8/17 L=50	41,34,46
43	ok,ok	0.0	0.64	4.0	4.0	0.0	0.19	0.08	0.05	0.02	2d8/17 L=50	41,34,46
	s=1,m=1	25.0	0.64	4.0	4.0	0.0	0.19	0.07	0.04	0.01	2d8/17 L=50	41,34,46
		50.0	0.64	4.0	4.0	0.0	0.19	0.07	0.04	8.66e-03	2d8/17 L=50	41,34,46
47	ok,ok	0.0	0.64	4.0	4.0	0.0	0.19	0.07	0.05	9.80e-03	2d8/17 L=50	44,34,46
	s=1,m=1	25.0	0.64	4.0	4.0	0.0	0.19	0.07	0.05	0.01	2d8/17 L=50	44,34,46
		50.0	0.64	4.0	4.0	0.0	0.19	0.06	0.05	0.02	2d8/17 L=50	44,34,46
51	ok,ok	0.0	0.64	4.0	4.0	0.0	0.19	0.04	0.06	0.03	2d8/17 L=50	46,53,44
	s=1,m=1	25.0	0.64	4.0	4.0	0.0	0.19	0.03	0.07	0.03	2d8/17 L=50	41,53,44
		50.0	0.64	4.0	4.0	0.0	0.19	0.04	0.07	0.04	2d8/17 L=50	44,53,44
Trave			**%Af**	**Af inf.**	**Af. sup**	**Af long.**	**x/d**	**V N/M**	**V V/T cls**	**V V/T acc**		
			0.64	4.02	4.02	0.0	0.19	0.27	0.22	0.15		

Macro Setto	Spessore	Id Materiale	Id Criterio	Progettazione
	cm			
2	25.00	1	1	Singolo elemento NON DISSIPATIVO

Nodo	Stato	x/d	V N/M	ver. rid	Af pr-	Af pr+	Af sec-	Af sec+	N z	N o	N zo	M z	M o	M zo
									daN/ m	daN/ m	daN/ m	daN	daN	daN
1	ok	0.16	0.1	9.83e-03	5.7	5.7	3.9	3.9	-2841.0	1261.9	2138.2	-49.3	161.6	-186.4
3	ok	0.16	0.1	1.82e-02	5.7	5.7	3.9	3.9	-2258.1	-881.4	-3130.0	63.3	94.5	85.0
4	ok	0.16	0.3	2.38e-02	5.7	5.7	3.9	3.9	-2963.4	-2605.0	-3340.0	162.0	901.2	140.6
5	ok	0.16	0.2	2.33e-02	5.7	5.7	3.9	3.9	-4521.7	-2445.0	-3397.0	-3.7	229.8	-194.7
6	ok	0.16	0.2	2.83e-02	5.7	5.7	3.9	3.9	-5889.7	-3853.6	2566.1	-69.9	26.6	-

Viale Duca Alessandro n. 11 – 43123 Parma
Cell. 335 1403156 – E mail ing.concari@gmail.com
Sito web: studioaire.it – P.IVA 02561480340

159.6														
7	ok	0.16	0.5	2.42e-02	5.7	5.7	3.9	3.9	-3453.5	-3735.5	-3876.2	276.9	1396.2	93.3
8	ok	0.16	0.2	2.36e-02	5.7	5.7	3.9	3.9	-2964.3	-4011.3	-4204.1	76.2	461.1	-
30.3														
9	ok	0.16	0.5	2.59e-02	5.7	5.7	3.9	3.9	-3638.6	-4254.2	-3983.0	324.7	1615.4	56.4
10	ok	0.16	0.1	2.24e-02	5.7	5.7	3.9	3.9	-2717.5	-4164.3	-4114.0	67.3	509.9	50.2
11	ok	0.16	0.5	2.50e-02	5.7	5.7	3.9	3.9	-3193.8	-4086.7	-3811.6	304.5	1496.8	17.7
12	ok	0.16	0.2	1.92e-02	5.7	5.7	3.9	3.9	-1960.7	-3631.9	-3721.1	13.2	436.2	
145.5														
13	ok	0.16	0.3	2.06e-02	5.7	5.7	3.9	3.9	-3663.8	-3141.8	-2103.8	232.4	1117.6	-
27.0														
14	ok	0.16	0.2	1.44e-02	5.7	5.7	3.9	3.9	-4053.9	-3042.6	1369.6	-155.3	178.0	
368.3														
15	ok	0.16	0.3	1.43e-02	5.7	5.7	3.9	3.9	3999.4	-38.1	-3266.5	257.1	290.4	24.6
16	ok	0.16	0.2	1.30e-02	5.7	5.7	3.9	3.9	2682.3	197.9	-3080.1	378.1	107.4	
206.5														
17	ok	0.16	0.3	1.25e-02	5.7	5.7	3.9	3.9	2355.7	544.6	-2696.0	858.7	197.2	-
16.6														
18	ok	0.16	0.2	2.13e-02	5.7	5.7	3.9	3.9	-5280.5	-4084.4	-135.7	-153.4	-82.1	-
247.2														
19	ok	0.16	0.2	2.96e-02	5.7	5.7	3.9	3.9	-5954.3	-5870.2	3020.1	-4.1	-43.6	-
221.8														
20	ok	0.16	0.2	2.01e-02	5.7	5.7	3.9	3.9	-4326.9	-3556.1	-1710.8	-281.0	-132.0	-
122.8														
21	ok	0.16	0.2	1.80e-02	5.7	5.7	3.9	3.9	-2138.7	-3650.2	-3479.6	-223.4	-87.6	63.8
22	ok	0.16	0.2	1.58e-02	5.7	5.7	3.9	3.9	-3641.0	-3257.9	-1793.6	-281.5	-158.3	
188.7														
23	ok	0.16	0.2	1.56e-02	5.7	5.7	3.9	3.9	-4340.4	-2395.2	1677.5	-437.5	-268.6	
423.2														
24	ok	0.16	0.2	1.51e-02	5.7	5.7	3.9	3.9	-3893.9	-1775.6	2093.3	299.0	-59.4	
374.9														
25	ok	0.16	0.5	1.32e-02	5.7	5.7	3.9	3.9	-4313.5	-1595.1	1667.9	1653.7	319.3	-
30.2														
26	ok	0.16	0.2	2.07e-02	5.7	5.7	3.9	3.9	-5450.2	-4794.9	758.5	-269.2	-177.8	-
197.3														
27	ok	0.16	0.2	3.17e-02	5.7	5.7	3.9	3.9	-5812.8	-6206.0	-2530.9	32.8	-26.3	-
206.4														
28	ok	0.16	0.2	1.82e-02	5.7	5.7	3.9	3.9	-4958.2	-3721.5	-575.5	-500.8	-297.2	-
76.5														
29	ok	0.16	0.2	1.67e-02	5.7	5.7	3.9	3.9	-2676.6	-3224.6	-2762.2	-445.4	-271.0	78.3
30	ok	0.16	0.3	1.60e-02	5.7	5.7	3.9	3.9	-3924.6	-2248.3	3003.3	-935.0	-510.9	
208.6														
31	ok	0.16	0.2	1.70e-02	5.7	5.7	3.9	3.9	-5183.8	-2279.7	1953.1	-579.1	-350.4	
350.3														
32	ok	0.16	0.2	1.72e-02	5.7	5.7	3.9	3.9	-5021.9	-2360.7	2125.3	547.3	8.3	
287.4														
33	ok	0.16	0.6	1.61e-02	5.7	5.7	3.9	3.9	-5457.0	-2434.2	1658.0	2409.7	466.9	-
54.5														
34	ok	0.16	0.2	2.30e-02	5.7	5.7	3.9	3.9	-5553.3	-5149.7	1317.2	-365.4	-190.7	-
112.5														
35	ok	0.16	0.1	3.31e-02	5.7	5.7	3.9	3.9	-5795.1	-6415.2	-2276.5	40.9	2.7	-
134.5														
36	ok	0.16	0.3	1.95e-02	5.7	5.7	3.9	3.9	-5354.3	-3809.3	419.7	-658.9	-322.2	-
18.8														
37	ok	0.16	0.3	1.90e-02	5.7	5.7	3.9	3.9	-5144.9	-2910.8	473.6	-797.3	-381.0	90.4
38	ok	0.16	0.2	1.89e-02	5.7	5.7	3.9	3.9	-4511.2	-1887.0	3159.2	-1272.8	-531.9	
170.5														
39	ok	0.16	0.2	1.91e-02	5.7	5.7	3.9	3.9	-4798.7	-2230.2	3291.3	-726.4	-357.2	
255.0														
40	ok	0.16	0.3	1.97e-02	5.7	5.7	3.9	3.9	-5742.4	-2202.0	2150.9	774.6	74.2	
168.2														
41	ok	0.16	0.7	1.88e-02	5.7	5.7	3.9	3.9	-6277.9	-3091.6	1489.6	2962.4	580.2	-
65.0														
42	ok	0.16	0.2	2.48e-02	5.7	5.7	3.9	3.9	-5569.6	-4910.5	22.5	-419.3	-194.6	-
37.7														
43	ok	0.16	9.99e-02	3.33e-02	5.7	5.7	3.9	3.9	-5790.7	-6349.6	-2134.3	23.0	-47.2	-
57.1														
44	ok	0.16	0.3	2.10e-02	5.7	5.7	3.9	3.9	-6011.8	-4006.9	578.1	-760.1	-304.6	19.4
45	ok	0.16	0.3	2.10e-02	5.7	5.7	3.9	3.9	-6042.1	-2968.4	559.9	-898.6	-344.1	90.7
46	ok	0.16	0.3	2.13e-02	5.7	5.7	3.9	3.9	-5038.7	-1648.5	3165.7	-1406.1	-484.2	
128.8														
47	ok	0.16	0.2	2.17e-02	5.7	5.7	3.9	3.9	-5425.5	-2164.1	3240.2	-734.4	-302.6	
169.1														
48	ok	0.16	0.3	2.25e-02	5.7	5.7	3.9	3.9	-5198.5	-2543.3	3347.2	895.8	110.8	
101.6														
49	ok	0.16	0.8	2.18e-02	5.7	5.7	3.9	3.9	-6796.2	-3548.1	1284.8	3343.8	659.3	-
70.9														
50	ok	0.16	0.2	2.64e-02	5.7	5.7	3.9	3.9	-4210.0	-9847.0	1075.6	-405.5	-208.4	-
26.0														
51	ok	0.16	0.2	3.89e-02	5.7	5.7	3.9	3.9	-4072.5	-1.396e+04	3056.3	-27.5	-142.1	-
49.7														
52	ok	0.16	0.3	2.22e-02	5.7	5.7	3.9	3.9	-6218.1	-4059.0	830.1	-823.1	-261.2	35.8
53	ok	0.16	0.3	2.24e-02	5.7	5.7	3.9	3.9	-6431.8	-2967.5	836.5	-949.6	-284.3	79.7
54	ok	0.16	0.3	2.30e-02	5.7	5.7	3.9	3.9	-5500.7	-1482.9	3064.5	-1475.9	-411.2	92.2
55	ok	0.16	0.2	2.36e-02	5.7	5.7	3.9	3.9	-5952.7	-2143.3	3127.7	-712.8	-244.7	
101.9														
56	ok	0.16	0.4	2.46e-02	5.7	5.7	3.9	3.9	-5754.8	-2703.2	3185.4	1045.9	166.7	45.7
57	ok	0.16	0.8	2.40e-02	5.7	5.7	3.9	3.9	-7418.8	-3927.5	1492.0	3601.4	715.2	-
12.9														
58	ok	0.16	0.2	2.87e-02	5.7	5.7	3.9	3.9	-4780.8	-9762.2	-977.5	-525.7	-187.8	-
16.1														
59	ok	0.16	0.2	4.30e-02	5.7	5.7	3.9	3.9	-4337.8	-1.520e+04	3808.8	-15.0	123.2	35.6
60	ok	0.16	0.3	2.32e-02	5.7	5.7	3.9	3.9	-6505.8	-4055.7	1353.9	-859.9	-212.1	44.7
61	ok	0.16	0.3	2.35e-02	5.7	5.7	3.9	3.9	-6762.5	-2942.4	1395.8	-969.7	-228.4	67.1
62	ok	0.16	0.3	2.42e-02	5.7	5.7	3.9	3.9	-5769.9	-1433.2	2991.2	-1505.9	-348.4	57.5
63	ok	0.16	0.1	2.50e-02	5.7	5.7	3.9	3.9	-6396.2	-2138.6	2982.6	-678.9	-196.1	56.6
64	ok	0.16	0.4	2.61e-02	5.7	5.7	3.9	3.9	-6215.2	-2807.3	3006.8	1161.6	209.8	12.1
65	ok	0.16	0.9	2.56e-02	5.7	5.7	3.9	3.9	-6671.1	-3641.7	2796.6	3692.3	732.1	-

Viale Duca Alessandro n. 11 – 43123 Parma
Cell. 335 1403156 – E mail ing.concari@gmail.com
Sito web: studioaire.it – P.IVA 02561480340

66.7														
66	ok	0.16	0.2	2.90e-02	5.7	5.7	3.9	3.9	-1860.9	-9997.0	2396.2	-481.9	-135.9	70.0
67	ok	0.16	0.1	4.28e-02	5.7	5.7	3.9	3.9	-4396.3	-1.555e+04	3030.7	-59.9	-95.6	79.5
68	ok	0.16	0.3	2.41e-02	5.7	5.7	3.9	3.9	-6724.8	-3977.9	1487.9	-874.3	-186.5	43.6
69	ok	0.16	0.3	2.44e-02	5.7	5.7	3.9	3.9	-6998.8	-2889.9	1523.3	-973.5	-190.3	50.9
70	ok	0.16	0.3	2.50e-02	5.7	5.7	3.9	3.9	-4383.2	-1325.2	5257.2	-900.8	-204.0	44.9
71	ok	0.16	0.1	2.59e-02	5.7	5.7	3.9	3.9	-6591.9	-2064.9	2841.3	-642.8	-158.3	28.7
72	ok	0.16	0.4	2.72e-02	5.7	5.7	3.9	3.9	-6451.1	-2861.6	2891.0	1247.2	241.3	-
17.8														
73	ok	0.16	0.9	2.68e-02	5.7	5.7	3.9	3.9	-7077.1	-3753.2	2683.1	3822.8	760.4	-
64.3														
74	ok	0.16	0.2	2.85e-02	5.7	5.7	3.9	3.9	-1746.2	-1.019e+04	2440.7	-488.8	-154.9	49.1
75	ok	0.16	0.1	4.07e-02	5.7	5.7	3.9	3.9	-4310.2	-1.475e+04	-323.8	-58.0	-106.0	45.4
76	ok	0.16	0.3	2.41e-02	5.7	5.7	3.9	3.9	-6726.8	-3916.7	1532.1	-878.8	-174.3	28.5
77	ok	0.16	0.3	2.48e-02	5.7	5.7	3.9	3.9	-7111.9	-2828.6	1590.6	-971.3	-169.2	30.9
78	ok	0.16	0.2	2.57e-02	5.7	5.7	3.9	3.9	-4499.1	-1385.2	5017.8	-818.7	-181.1	27.1
79	ok	0.16	0.2	2.66e-02	5.7	5.7	3.9	3.9	-6881.7	-2051.9	2663.4	-592.7	-138.3	7.5
80	ok	0.16	0.5	2.79e-02	5.7	5.7	3.9	3.9	-6763.8	-2962.2	2704.0	1322.8	259.9	-
24.5														
81	ok	0.16	0.9	2.76e-02	5.7	5.7	3.9	3.9	-7506.3	-3847.0	2625.6	3932.3	783.9	-
59.4														
82	ok	0.16	0.2	2.82e-02	5.7	5.7	3.9	3.9	-1687.4	-9985.7	1805.6	-494.0	-150.4	31.5
83	ok	0.16	0.2	4.04e-02	5.7	5.7	3.9	3.9	-4410.8	-1.425e+04	3554.1	-58.8	-82.1	25.6
84	ok	0.16	0.3	2.38e-02	5.7	5.7	3.9	3.9	-6721.9	-3789.1	1447.3	-880.4	-169.5	9.1
85	ok	0.16	0.3	2.49e-02	5.7	5.7	3.9	3.9	-7168.8	-2719.7	1581.2	-970.1	-163.1	8.8
86	ok	0.16	0.2	2.61e-02	5.7	5.7	3.9	3.9	-5307.6	-1256.6	4858.1	-800.1	-147.6	12.3
87	ok	0.16	0.2	2.71e-02	5.7	5.7	3.9	3.9	-6272.3	-1040.2	5279.6	-58.6	27.4	-
20.4														
88	ok	0.16	0.5	2.84e-02	5.7	5.7	3.9	3.9	-6204.7	-1149.3	5278.2	1356.9	306.3	-
34.1														
89	ok	0.16	0.9	2.82e-02	5.7	5.7	3.9	3.9	-7811.9	-3730.1	2077.3	3972.3	793.4	-
48.3														
90	ok	0.16	0.2	2.66e-02	5.7	5.7	3.9	3.9	-1919.3	-9142.3	1828.0	-498.9	-152.8	5.3
91	ok	0.16	0.2	3.80e-02	5.7	5.7	3.9	3.9	-4424.2	-1.335e+04	3071.7	-64.4	-99.0	-4.8
92	ok	0.16	0.3	2.36e-02	5.7	5.7	3.9	3.9	-6751.6	-3585.3	925.7	-877.5	-177.4	-9.3
93	ok	0.16	0.3	2.49e-02	5.7	5.7	3.9	3.9	-7203.8	-2543.2	1136.9	-970.2	-173.7	-
15.0														
94	ok	0.16	0.2	2.62e-02	5.7	5.7	3.9	3.9	-5819.0	-1069.2	4731.1	-773.4	-138.4	-4.5
95	ok	0.16	0.2	2.75e-02	5.7	5.7	3.9	3.9	-6918.2	-900.3	5115.8	-18.7	42.9	-
27.4														
96	ok	0.16	0.5	2.89e-02	5.7	5.7	3.9	3.9	-6274.4	-1219.9	5101.6	1386.7	311.8	-
35.7														
97	ok	0.16	0.9	2.85e-02	5.7	5.7	3.9	3.9	-7964.4	-4191.9	2331.4	3978.1	794.8	-9.5
98	ok	0.16	0.2	2.50e-02	5.7	5.7	3.9	3.9	-1955.8	-8228.9	3032.0	-502.6	-149.2	-
31.5														
99	ok	0.16	0.2	3.60e-02	5.7	5.7	3.9	3.9	-4349.7	-1.288e+04	229.6	-62.1	-85.5	-
21.9														
100	ok	0.16	0.3	2.34e-02	5.7	5.7	3.9	3.9	-2011.5	-5813.5	3021.9	-782.7	-185.3	-
36.5														
101	ok	0.16	0.3	2.47e-02	5.7	5.7	3.9	3.9	-4040.4	-1993.6	4334.6	-780.0	-147.3	-6.3
102	ok	0.16	0.2	2.62e-02	5.7	5.7	3.9	3.9	-6341.1	-878.8	4475.5	-749.5	-144.8	-
24.0														
103	ok	0.16	0.2	2.76e-02	5.7	5.7	3.9	3.9	-7486.9	-682.7	4874.6	0.2	41.6	-
39.2														
104	ok	0.16	0.5	2.92e-02	5.7	5.7	3.9	3.9	-8073.8	-1144.0	5322.0	1391.7	320.6	-
14.5														
105	ok	0.16	0.9	2.89e-02	5.7	5.7	3.9	3.9	-7914.7	-1373.5	4817.4	3549.8	725.6	-
23.0														
106	ok	0.16	0.2	2.33e-02	5.7	5.7	3.9	3.9	-1938.4	-7986.4	2474.4	-506.2	-173.7	-
32.2														
107	ok	0.16	8.49e-02	3.08e-02	5.7	5.7	3.9	3.9	-5864.6	-5871.1	3440.3	6.6	-54.6	28.9
108	ok	0.16	0.2	2.30e-02	5.7	5.7	3.9	3.9	-1916.2	-5445.0	3191.9	-778.4	-208.4	-
62.0														
109	ok	0.16	0.3	2.43e-02	5.7	5.7	3.9	3.9	-4507.6	-1614.7	4288.3	-769.4	-167.8	-
38.1														
110	ok	0.16	0.2	2.58e-02	5.7	5.7	3.9	3.9	-6775.1	-611.7	4120.2	-727.4	-170.8	-
52.0														
111	ok	0.16	0.2	2.76e-02	5.7	5.7	3.9	3.9	-6810.9	-501.8	4296.1	-28.8	7.0	-
50.7														
112	ok	0.16	0.5	2.94e-02	5.7	5.7	3.9	3.9	-8580.8	-937.0	5139.9	1356.8	309.3	-2.6
113	ok	0.16	0.9	2.91e-02	5.7	5.7	3.9	3.9	-8382.6	-1398.3	4652.8	3478.6	713.2	19.8
114	ok	0.16	0.2	2.26e-02	5.7	5.7	3.9	3.9	-1833.8	-6802.4	2707.3	-491.2	-184.5	-
37.4														
115	ok	0.16	0.1	2.93e-02	5.7	5.7	3.9	3.9	-5837.0	-5267.0	3302.7	12.2	-74.7	43.7
116	ok	0.16	0.2	2.24e-02	5.7	5.7	3.9	3.9	-6065.6	-2927.6	1211.8	-796.4	-284.1	-
21.2														
117	ok	0.16	0.2	2.32e-02	5.7	5.7	3.9	3.9	-4503.4	-1527.3	3988.1	-782.5	-213.6	-
65.8														
118	ok	0.16	0.2	2.48e-02	5.7	5.7	3.9	3.9	-7174.0	-132.9	3544.5	-702.2	-223.2	-
90.5														
119	ok	0.16	0.1	2.70e-02	5.7	5.7	3.9	3.9	-6584.0	628.0	5051.7	220.4	70.7	-
46.5														
120	ok	0.16	0.5	2.95e-02	5.7	5.7	3.9	3.9	-8863.7	-666.5	4906.4	1251.5	274.2	-2.7
121	ok	0.16	0.9	2.92e-02	5.7	5.7	3.9	3.9	-8599.0	-1389.6	4473.5	3299.2	677.9	69.4
122	ok	0.16	0.2	2.25e-02	5.7	5.7	3.9	3.9	-5681.1	-3625.1	259.4	-398.8	-192.8	61.7
123	ok	0.16	0.1	2.74e-02	5.7	5.7	3.9	3.9	-5803.7	-4167.1	3238.9	21.6	-55.3	76.4
124	ok	0.16	0.2	2.18e-02	5.7	5.7	3.9	3.9	-2246.9	-5163.6	3827.0	-746.5	-266.8	-
58.3														
125	ok	0.16	0.2	2.17e-02	5.7	5.7	3.9	3.9	-2185.3	-3702.0	3725.7	-864.0	-300.6	-
107.6														
126	ok	0.16	0.2	2.28e-02	5.7	5.7	3.9	3.9	-6764.7	51.0	2964.2	-620.6	-293.6	-
133.4														
127	ok	0.16	0.2	2.52e-02	5.7	5.7	3.9	3.9	-6367.6	1269.4	4664.3	136.2	-11.8	-
90.3														
128	ok	0.16	0.4	2.87e-02	5.7	5.7	3.9	3.9	-6983.7	1427.6	5751.0	1307.9	280.8	49.3
129	ok	0.16	0.8	2.92e-02	5.7	5.7	3.9	3.9	-8315.9	-1322.7	4283.8	2967.0	609.6	
106.8														
130	ok	0.16	0.2	2.30e-02	5.7	5.7	3.9	3.9	-5654.8	-3235.1	626.6	-340.3	-160.4	

Viale Duca Alessandro n. 11 – 43123 Parma
Cell. 335 1403156 – E mail ing.concari@gmail.com
Sito web: studioaire.it – P.IVA 02561480340

126.5														
131	ok	0.16	0.2	2.56e-02	5.7	5.7	3.9	3.9	-5838.1	-2461.5	3246.2	25.0	-4.4	
130.8														
132	ok	0.16	0.2	2.42e-02	5.7	5.7	3.9	3.9	-5780.5	-4806.2	4027.5	-696.2	-247.1	-
30.9														
133	ok	0.16	0.2	2.28e-02	5.7	5.7	3.9	3.9	-5483.7	-3595.7	3867.3	-802.4	-331.6	-
87.8														
134	ok	0.16	0.2	2.06e-02	5.7	5.7	3.9	3.9	-5104.4	-935.8	4088.3	-681.7	-348.7	-
154.0														
135	ok	0.16	0.3	2.07e-02	5.7	5.7	3.9	3.9	-5275.8	2287.0	4471.0	-204.3	-204.2	-
200.9														
136	ok	0.16	0.4	2.45e-02	5.7	5.7	3.9	3.9	-6055.0	2563.3	5143.4	1032.7	198.3	7.1
137	ok	0.16	0.7	2.73e-02	5.7	5.7	3.9	3.9	-5299.2	-216.9	5631.3	2450.0	512.1	
197.7														
138	ok	0.16	0.2	3.07e-02	5.7	5.7	3.9	3.9	-1.187e+04	-1824.9	1361.7	-423.3	-85.5	44.1
139	ok	0.16	0.2	2.81e-02	5.7	5.7	3.9	3.9	-5844.3	-1615.3	-3108.1	23.4	21.4	
157.9														
140	ok	0.16	0.2	3.86e-02	5.7	5.7	3.9	3.9	-1.332e+04	-2187.4	4804.2	-670.7	-223.8	57.8
141	ok	0.16	0.2	3.71e-02	5.7	5.7	3.9	3.9	-1.257e+04	-1623.9	4989.7	-734.9	-349.0	-8.2
142	ok	0.16	0.4	3.37e-02	5.7	5.7	3.9	3.9	-8436.8	-429.4	7708.4	-573.5	-407.8	-
129.9														
143	ok	0.16	0.4	2.30e-02	5.7	5.7	3.9	3.9	-2097.6	1307.3	8327.9	-227.2	-360.2	-
273.0														
144	ok	0.16	0.4	2.36e-02	5.7	5.7	3.9	3.9	6836.7	4236.5	5254.1	784.6	-13.0	-
119.4														
145	ok	0.16	0.7	3.05e-02	5.7	5.7	3.9	3.9	4546.3	433.8	6729.8	1866.0	386.8	
190.5														
146	ok	0.16	0.2	3.64e-02	5.7	5.7	3.9	3.9	-1.310e+04	-2821.2	-2425.1	-407.0	95.2	-
23.9														
147	ok	0.16	0.3	5.07e-02	5.7	5.7	3.9	3.9	-1.871e+04	-2571.0	4333.8	-649.8	1.2	20.9
148	ok	0.16	0.3	5.16e-02	5.7	5.7	3.9	3.9	-1.717e+04	-2519.0	7253.1	-622.5	-0.6	10.4
149	ok	0.16	0.3	4.44e-02	5.7	5.7	3.9	3.9	-9213.1	-1515.5	1.123e+04	-384.7	-16.2	-
29.5														
150	ok	0.16	0.5	2.88e-02	5.7	5.7	3.9	3.9	1255.3	730.1	1.210e+04	-48.9	-123.2	-
130.8														
151	ok	0.16	0.6	9.27e-03	5.7	5.7	3.9	3.9	1.687e+04	5109.8	7672.4	509.9	-179.9	-
113.8														
691	ok	0.16	0.4	7.26e-03	5.7	5.7	3.9	3.9	6971.4	2289.9	-4451.3	472.4	34.2	-
32.4														
693	ok	0.17	0.7	6.22e-03	5.7	6.6	3.9	4.0	2.099e+04	2770.3	4841.6	1177.8	41.9	
103.1														

Nodo		x/d	V N/M	ver. rid	Af pr-	Af pr+	Af sec-	Af sec+	N z	N o	N zo	M z	M o	M
zo														
									-1.871e+04	-1.555e+04	-4451.28	-1505.92	-531.95	-
273.03														
		0.17	0.93	0.05	5.65	6.58	3.93	4.01	2.099e+04	5109.84	1.210e+04	3978.10	1615.40	
423.24														

Nodo	Stato	Max tau daN/cm2	Ver V pr	Ver V sec	Af V pr	Af V sec	V pr daN/ m	V sec daN/ m
1	ok	1.20						
3	ok	0.91						
4	ok	1.19						
5	ok	1.19						
6	ok	1.20						
7	ok	1.49						
8	ok	1.49						
9	ok	1.59						
10	ok	1.59						
11	ok	1.63						
12	ok	1.63						
13	ok	1.52						
14	ok	1.52						
15	ok	1.01						
16	ok	1.22						
17	ok	1.22						
18	ok	0.66						
19	ok	0.50						
20	ok	0.87						
21	ok	0.92						
22	ok	0.94						
23	ok	0.98						
24	ok	1.81						
25	ok	1.80						
26	ok	0.68						
27	ok	0.69						
28	ok	0.55						
29	ok	0.54						
30	ok	0.65						
31	ok	1.34						
32	ok	2.20						
33	ok	2.19						
34	ok	0.77						
35	ok	0.79						
36	ok	0.60						
37	ok	0.37						
38	ok	0.80						
39	ok	1.55						
40	ok	2.42						
41	ok	2.42						
42	ok	1.00						
43	ok	1.39						
44	ok	0.60						
45	ok	0.31						
46	ok	0.89						

Viale Duca Alessandro n. 11 – 43123 Parma
Cell. 335 1403156 – E mail ing.concari@gmail.com
Sito web: studioaire.it – P.IVA 02561480340

47	ok	1.67
48	ok	2.53
49	ok	2.53
50	ok	1.00
51	ok	1.71
52	ok	0.63
53	ok	0.34
54	ok	0.95
55	ok	1.74
56	ok	2.59
57	ok	2.59
58	ok	0.91
59	ok	1.71
60	ok	0.63
61	ok	0.38
62	ok	1.00
63	ok	1.77
64	ok	2.63
65	ok	2.63
66	ok	0.88
67	ok	1.10
68	ok	0.63
69	ok	0.40
70	ok	1.02
71	ok	1.80
72	ok	2.65
73	ok	2.65
74	ok	0.88
75	ok	0.88
76	ok	0.60
77	ok	0.41
78	ok	1.04
79	ok	1.82
80	ok	2.67
81	ok	2.67
82	ok	0.87
83	ok	0.87
84	ok	0.60
85	ok	0.41
86	ok	1.04
87	ok	1.82
88	ok	2.67
89	ok	2.67
90	ok	0.88
91	ok	0.88
92	ok	0.61
93	ok	0.41
94	ok	1.04
95	ok	1.82
96	ok	2.67
97	ok	2.67
98	ok	0.88
99	ok	0.89
100	ok	0.61
101	ok	0.40
102	ok	1.03
103	ok	1.81
104	ok	2.67
105	ok	2.67
106	ok	0.86
107	ok	0.89
108	ok	0.61
109	ok	0.38
110	ok	0.99
111	ok	1.78
112	ok	2.65
113	ok	2.66
114	ok	0.81
115	ok	0.82
116	ok	0.59
117	ok	0.35
118	ok	0.94
119	ok	1.72
120	ok	2.60
121	ok	2.61
122	ok	0.77
123	ok	0.78
124	ok	0.57
125	ok	0.42
126	ok	0.84
127	ok	1.61
128	ok	2.51
129	ok	2.51
130	ok	0.64
131	ok	0.64
132	ok	0.61
133	ok	0.67
134	ok	0.71
135	ok	1.41
136	ok	2.33
137	ok	2.33
138	ok	0.68
139	ok	0.91
140	ok	1.12
141	ok	1.25
142	ok	1.15
143	ok	1.13
144	ok	2.16

Viale Duca Alessandro n. 11 – 43123 Parma
Cell. 335 1403156 – E mail ing.concari@gmail.com
Sito web: studioaire.it – P.IVA 02561480340

145	ok	2.00
146	ok	0.68
147	ok	1.12
148	ok	1.25
149	ok	1.15
150	ok	0.94
151	ok	2.16
691	ok	0.75
693	ok	1.85

Nodo	Max tau	Ver V pr	Ver V sec	Af V pr	Af V sec	V pr	V sec
	2.67						

Macro Setto	Spessore	Id Materiale	Id Criterio	Progettazione
	cm			
3	25.00	1	1	Singolo elemento NON DISSIPATIVO

Nodo	Stato	x/d	V N/M	ver. rid	Af pr-	Af pr+	Af sec-	Af sec+	N z	N o	N zo	M z	M o	M zo
									daN/ m	daN/ m	daN/ m	daN	daN	daN
2	ok	0.16	0.2	1.04e-02	5.7	5.7	3.9	3.9	-1365.7	-320.3	492.1	183.5	3.9	151.4
152	ok	0.16	0.1	2.15e-02	5.7	5.7	3.9	3.9	-3022.1	-2326.1	-2752.4	-120.6	-571.1	-249.2
153	ok	0.16	0.1	1.98e-02	5.7	5.7	3.9	3.9	-2508.4	-2405.5	-4284.4	-106.6	-267.0	-260.8
154	ok	0.16	0.2	2.92e-02	5.7	5.7	3.9	3.9	-6795.8	-1765.1	-3904.3	-61.8	-17.3	-263.9
155	ok	0.16	0.2	1.96e-02	5.7	5.7	3.9	3.9	-3503.5	-3477.2	-2416.5	-202.5	-852.9	-185.0
156	ok	0.16	0.1	1.75e-02	5.7	5.7	3.9	3.9	-2144.9	-3078.9	-3093.0	-212.3	-391.3	-192.9
157	ok	0.16	0.2	1.92e-02	5.7	5.7	3.9	3.9	-3196.4	-4078.0	-3713.2	-231.1	-935.2	-39.6
158	ok	0.16	0.1	1.59e-02	5.7	5.7	3.9	3.9	-2406.2	-3514.3	-2849.9	-272.2	-457.3	-83.8
159	ok	0.16	0.3	1.80e-02	5.7	5.7	3.9	3.9	-2210.1	-3194.7	2267.0	-142.8	-487.9	130.8
160	ok	0.16	0.1	1.69e-02	5.7	5.7	3.9	3.9	-1994.4	-2530.3	3833.2	-237.5	-338.6	107.9
161	ok	0.16	0.2	1.46e-02	5.7	5.7	3.9	3.9	-588.2	-2409.0	2412.4	-87.7	-251.1	227.7
162	ok	0.16	0.2	1.65e-02	5.7	5.7	3.9	3.9	-1289.6	-1726.8	4376.2	-187.0	-244.0	223.4
163	ok	0.16	0.3	8.95e-03	5.7	5.7	3.9	3.9	4271.6	889.8	-1831.1	-42.5	330.7	216.2
164	ok	0.16	0.2	1.38e-02	5.7	5.7	3.9	3.9	-2182.2	1583.6	-1039.4	-234.4	-89.6	489.9
165	ok	0.16	0.2	8.76e-03	5.7	5.7	3.9	3.9	-2621.3	-164.1	-453.8	-389.6	-74.0	339.1
166	ok	0.16	0.2	1.89e-02	5.7	5.7	3.9	3.9	-5182.6	-1679.6	-1369.7	-106.8	-65.9	-214.6
167	ok	0.16	0.2	2.52e-02	5.7	5.7	3.9	3.9	-5891.0	-3028.8	2844.1	17.1	-2.6	-194.1
168	ok	0.16	0.2	1.62e-02	5.7	5.7	3.9	3.9	-2616.1	-2822.4	-2232.8	-208.3	-169.7	-92.9
169	ok	0.16	0.1	1.71e-02	5.7	5.7	3.9	3.9	-3614.0	-815.9	4204.1	-336.6	-201.6	30.4
170	ok	0.16	0.1	1.91e-02	5.7	5.7	3.9	3.9	-3149.1	-1401.7	4615.4	-367.7	-189.5	99.1
171	ok	0.16	0.1	1.96e-02	5.7	5.7	3.9	3.9	-3372.3	-1829.7	4897.3	-347.1	-147.3	196.7
172	ok	0.16	0.2	1.89e-02	5.7	5.7	3.9	3.9	-3679.6	-2305.1	4290.5	-312.6	-95.0	312.4
173	ok	0.16	0.2	1.62e-02	5.7	5.7	3.9	3.9	-3220.5	-2625.2	3346.8	6.4	-3.4	306.2
174	ok	0.16	0.2	1.94e-02	5.7	5.7	3.9	3.9	-4185.2	2878.6	2960.9	-221.2	-132.8	-54.4
175	ok	0.16	0.2	2.57e-02	5.7	5.7	3.9	3.9	-5861.2	-3067.9	-2695.6	9.7	0.5	-169.3
176	ok	0.16	0.2	1.84e-02	5.7	5.7	3.9	3.9	-4230.1	1332.0	3747.4	-350.3	-174.3	-31.7
177	ok	0.16	0.2	1.84e-02	5.7	5.7	3.9	3.9	-3834.2	-4.8	4029.2	-429.0	-198.1	5.7
178	ok	0.16	0.1	2.06e-02	5.7	5.7	3.9	3.9	-4138.8	-1119.2	4663.8	-471.2	-195.5	77.8
179	ok	0.16	0.1	2.20e-02	5.7	5.7	3.9	3.9	-4621.0	-2200.0	4796.6	-490.4	-171.0	167.4
180	ok	0.16	0.2	2.27e-02	5.7	5.7	3.9	3.9	-5142.4	-3520.2	4243.5	-499.6	-132.5	278.2
181	ok	0.16	0.2	2.23e-02	5.7	5.7	3.9	3.9	-5486.2	-5421.6	2412.6	-180.4	-37.9	288.7
182	ok	0.16	0.2	2.06e-02	5.7	5.7	3.9	3.9	-4252.8	3099.1	2787.1	-267.0	-133.9	-44.5
183	ok	0.16	0.2	2.55e-02	5.7	5.7	3.9	3.9	-5844.9	-2539.1	-2524.9	11.3	5.9	-147.6
184	ok	0.16	0.2	2.07e-02	5.7	5.7	3.9	3.9	-4633.4	2132.3	3832.4	-409.4	-178.6	-22.7
185	ok	0.16	0.2	2.12e-02	5.7	5.7	3.9	3.9	-4325.3	214.0	3991.0	-506.0	-202.3	9.5
186	ok	0.16	0.2	2.18e-02	5.7	5.7	3.9	3.9	-4792.1	-995.9	4500.0	-574.7	-208.3	71.4
187	ok	0.16	0.2	2.35e-02	5.7	5.7	3.9	3.9	-5388.7	-2297.0	4554.4	-622.9	-195.3	150.4
188	ok	0.16	0.2	2.53e-02	5.7	5.7	3.9	3.9	-6003.0	-3960.8	4114.3	-383.4	-170.0	251.1
189	ok	0.16	0.2	2.65e-02	5.7	5.7	3.9	3.9	-6672.5	-6863.3	2481.8	-376.2	-76.3	258.9
190	ok	0.16	0.3	2.10e-02	5.7	5.7	3.9	3.9	-4385.6	5067.0	3111.9	-295.6	-152.2	-

Viale Duca Alessandro n. 11 – 43123 Parma
Cell. 335 1403156 – E mail ing.concari@gmail.com
Sito web: studioaire.it – P.IVA 02561480340

191	ok	0.16	0.3	2.53e-02	5.7	5.7	3.9	3.9	-4146.2	7771.7	3179.1	-64.5	-82.5	-26.6
192	ok	0.16	0.2	2.20e-02	5.7	5.7	3.9	3.9	-4966.3	2745.4	3624.8	-434.9	-191.6	-13.9
193	ok	0.16	0.2	2.32e-02	5.7	5.7	3.9	3.9	-5466.9	582.6	4093.7	-548.3	-218.7	14.3
194	ok	0.16	0.2	2.43e-02	5.7	5.7	3.9	3.9	-5476.8	-951.8	4187.9	-663.0	-233.0	57.0
195	ok	0.16	0.2	2.53e-02	5.7	5.7	3.9	3.9	-6183.6	-2714.2	4205.3	-741.2	-226.2	125.5
196	ok	0.16	0.2	2.71e-02	5.7	5.7	3.9	3.9	-6859.4	-4859.9	3866.6	-503.1	-207.5	218.3
197	ok	0.16	0.3	2.94e-02	5.7	5.7	3.9	3.9	-7398.3	-7700.4	3800.0	-554.2	-111.6	223.2
198	ok	0.16	0.3	2.14e-02	5.7	5.7	3.9	3.9	-4677.3	5387.5	2767.7	-300.4	-178.6	-33.9
199	ok	0.16	0.4	2.70e-02	5.7	5.7	3.9	3.9	-1586.0	9416.8	3758.3	-82.5	-178.5	-40.0
200	ok	0.16	0.2	2.29e-02	5.7	5.7	3.9	3.9	-5187.8	2906.9	3284.5	-470.7	-208.4	-16.4
201	ok	0.16	0.2	2.44e-02	5.7	5.7	3.9	3.9	-5919.6	942.0	3695.5	-597.3	-233.8	9.8
202	ok	0.16	0.2	2.59e-02	5.7	5.7	3.9	3.9	-5995.5	-942.9	3770.5	-733.3	-251.4	44.5
203	ok	0.16	0.2	2.72e-02	5.7	5.7	3.9	3.9	-6758.6	-3053.8	3800.8	-840.1	-250.2	99.9
204	ok	0.16	0.2	2.89e-02	5.7	5.7	3.9	3.9	-7464.6	-5531.4	3587.5	-613.6	-238.0	175.5
205	ok	0.16	0.3	3.14e-02	5.7	5.7	3.9	3.9	-8040.8	-8595.4	3772.0	-705.7	-142.2	182.5
206	ok	0.16	0.3	2.24e-02	5.7	5.7	3.9	3.9	-4904.0	5616.6	2204.9	-321.0	-174.4	-31.3
207	ok	0.16	0.4	2.79e-02	5.7	5.7	3.9	3.9	-1443.4	1.005e+04	818.6	-68.3	-96.3	-43.7
208	ok	0.16	0.2	2.36e-02	5.7	5.7	3.9	3.9	-5535.5	3522.4	2893.7	-494.9	-214.3	-14.3
209	ok	0.16	0.2	2.52e-02	5.7	5.7	3.9	3.9	-6283.3	1230.6	3242.5	-635.5	-243.8	4.8
210	ok	0.16	0.2	2.69e-02	5.7	5.7	3.9	3.9	-6388.4	-922.4	3309.4	-788.1	-265.0	31.7
211	ok	0.16	0.2	2.84e-02	5.7	5.7	3.9	3.9	-7179.4	-3286.8	3372.5	-918.2	-268.4	73.4
212	ok	0.16	0.2	3.04e-02	5.7	5.7	3.9	3.9	-7907.6	-5986.9	3289.0	-708.7	-163.8	133.7
213	ok	0.16	0.3	3.26e-02	5.7	5.7	3.9	3.9	-8517.0	-9202.4	3696.9	-828.9	-167.2	142.0
214	ok	0.16	0.3	2.24e-02	5.7	5.7	3.9	3.9	-5047.0	6723.0	2044.3	-329.5	-163.0	-16.6
215	ok	0.16	0.4	2.41e-02	5.7	5.7	3.9	3.9	-4450.3	5924.2	-68.3	-74.8	-102.7	-14.2
216	ok	0.16	0.2	2.37e-02	5.7	5.7	3.9	3.9	-5737.2	3988.3	2541.2	-521.9	-205.8	-13.3
217	ok	0.16	0.2	2.56e-02	5.7	5.7	3.9	3.9	-5874.5	1549.3	2613.9	-671.0	-242.6	-4.4
218	ok	0.16	0.2	2.74e-02	5.7	5.7	3.9	3.9	-6667.0	-878.0	2826.3	-824.6	-274.3	19.3
219	ok	0.16	0.2	2.91e-02	5.7	5.7	3.9	3.9	-7493.5	-3401.2	2926.3	-973.4	-282.0	55.1
220	ok	0.16	0.3	3.14e-02	5.7	5.7	3.9	3.9	-8246.3	-6240.8	2974.0	-784.1	-186.8	91.0
221	ok	0.16	0.3	3.32e-02	5.7	5.7	3.9	3.9	-8885.5	-9553.2	3586.6	-924.3	-186.8	101.7
222	ok	0.16	0.3	2.12e-02	5.7	5.7	3.9	3.9	-4857.9	6671.1	1783.8	-329.1	-150.4	-1.5
223	ok	0.16	0.4	2.43e-02	5.7	5.7	3.9	3.9	-1544.0	1.161e+04	-67.0	-67.1	-67.0	-6.0
224	ok	0.16	0.2	2.33e-02	5.7	5.7	3.9	3.9	-5725.4	4093.9	2031.2	-528.0	-210.6	-0.8
225	ok	0.16	0.2	2.55e-02	5.7	5.7	3.9	3.9	-6673.6	1563.2	2199.6	-684.7	-250.5	1.9
226	ok	0.16	0.2	2.76e-02	5.7	5.7	3.9	3.9	-6860.7	-787.0	2292.3	-857.6	-279.6	8.0
227	ok	0.16	0.2	2.96e-02	5.7	5.7	3.9	3.9	-7736.6	-3387.7	2463.1	-1023.5	-290.9	28.7
228	ok	0.16	0.3	3.20e-02	5.7	5.7	3.9	3.9	-8714.3	-6220.9	2607.7	-860.9	-212.6	44.4
229	ok	0.16	0.3	3.35e-02	5.7	5.7	3.9	3.9	-9306.8	-9358.2	2066.8	-1021.0	-207.4	58.2
230	ok	0.16	0.3	2.08e-02	5.7	5.7	3.9	3.9	-5064.2	6552.5	1164.3	-323.9	-152.0	18.2
231	ok	0.16	0.4	2.41e-02	5.7	5.7	3.9	3.9	-1751.3	1.118e+04	3003.3	-69.6	-78.8	22.2
232	ok	0.16	0.2	2.30e-02	5.7	5.7	3.9	3.9	-5874.4	4024.2	1103.2	-521.6	-209.9	11.7
233	ok	0.16	0.2	2.54e-02	5.7	5.7	3.9	3.9	-6914.4	1685.6	1284.9	-680.6	-253.3	3.8
234	ok	0.16	0.2	2.77e-02	5.7	5.7	3.9	3.9	-7126.7	-621.2	1432.5	-857.1	-284.9	-1.9
235	ok	0.16	0.2	2.98e-02	5.7	5.7	3.9	3.9	-8188.6	-3027.0	1743.5	-1032.3	-301.3	-6.6
236	ok	0.16	0.3	3.24e-02	5.7	5.7	3.9	3.9	-8946.4	-5906.8	1988.2	-892.6	-224.6	-4.1
237	ok	0.16	0.4	3.37e-02	5.7	5.7	3.9	3.9	-9471.1	-9644.1	3357.2	-1061.7	-216.2	18.4
238	ok	0.16	0.3	2.09e-02	5.7	5.7	3.9	3.9	-5117.1	6527.8	441.4	-313.7	-150.9	39.1
239	ok	0.16	0.4	2.55e-02	5.7	5.7	3.9	3.9	-4714.2	6295.3	2943.3	-66.9	-91.8	24.7
240	ok	0.16	0.2	2.31e-02	5.7	5.7	3.9	3.9	-5852.4	3813.3	-1609.6	-509.2	-201.0	49.7
241	ok	0.16	0.2	2.55e-02	5.7	5.7	3.9	3.9	-6123.0	1716.6	-1432.3	-660.7	-236.2	37.3
242	ok	0.16	0.2	2.78e-02	5.7	5.7	3.9	3.9	-7359.1	-316.6	941.3	-838.8	-283.1	-13.9
243	ok	0.16	0.2	2.99e-02	5.7	5.7	3.9	3.9	-8251.2	-2879.9	1349.2	-1019.1	-302.3	-24.9
244	ok	0.16	0.3	3.26e-02	5.7	5.7	3.9	3.9	-9146.1	-5489.9	1744.1	-906.2	-233.1	-48.6
245	ok	0.16	0.4	3.40e-02	5.7	5.7	3.9	3.9	-9688.2	-8744.3	1415.7	-1086.3	-223.2	-29.0
246	ok	0.16	0.3	2.13e-02	5.7	5.7	3.9	3.9	-5147.4	5719.5	-2051.4	-311.6	-152.9	53.4
247	ok	0.16	0.3	2.60e-02	5.7	5.7	3.9	3.9	-4585.0	6413.4	-101.5	-67.0	-97.0	40.3
248	ok	0.16	0.2	2.34e-02	5.7	5.7	3.9	3.9	-6048.5	3723.0	-2273.2	-495.6	-189.9	46.2
249	ok	0.16	0.2	2.56e-02	5.7	5.7	3.9	3.9	-6290.2	2006.5	-2066.1	-638.8	-221.3	27.0
250	ok	0.16	0.2	2.78e-02	5.7	5.7	3.9	3.9	-7239.8	231.8	3577.9	-732.3	-297.9	-29.0
251	ok	0.16	0.2	2.99e-02	5.7	5.7	3.9	3.9	-7344.7	-724.0	3901.3	-937.1	-327.0	-62.9
252	ok	0.16	0.3	3.25e-02	5.7	5.7	3.9	3.9	-9247.6	-4911.5	1519.2	-895.7	-236.4	-93.0
253	ok	0.16	0.4	3.41e-02	5.7	5.7	3.9	3.9	-9754.6	-8264.5	1336.6	-1085.6	-224.8	-76.6
254	ok	0.16	0.2	2.15e-02	5.7	5.7	3.9	3.9	-5219.4	4403.7	-2562.9	-308.2	-127.5	55.3
255	ok	0.16	0.3	2.47e-02	5.7	5.7	3.9	3.9	-5864.2	-2205.1	2967.7	28.1	49.2	162.7
256	ok	0.16	0.2	2.34e-02	5.7	5.7	3.9	3.9	-6097.5	3650.0	-2831.8	-475.9	-165.0	55.3
257	ok	0.16	0.2	2.53e-02	5.7	5.7	3.9	3.9	-6302.1	2375.8	-2605.1	-606.4	-196.9	32.2
258	ok	0.16	0.2	2.74e-02	5.7	5.7	3.9	3.9	-7160.6	542.1	3119.4	-685.4	-285.4	-27.8

Viale Duca Alessandro n. 11 – 43123 Parma
Cell. 335 1403156 – E mail ing.concari@gmail.com
Sito web: studioaire.it – P.IVA 02561480340

259	ok	0.16	0.3	2.94e-02	5.7	5.7	3.9	3.9	-8143.7	-205.3	3996.5	-907.5	-329.9	-81.1
260	ok	0.16	0.4	3.22e-02	5.7	5.7	3.9	3.9	-9144.8	-4183.8	1320.3	-856.8	-232.8	-141.7
261	ok	0.16	0.4	3.39e-02	5.7	5.7	3.9	3.9	-9661.7	-7746.9	1246.1	-1055.8	-220.3	-126.4
262	ok	0.16	0.2	2.12e-02	5.7	5.7	3.9	3.9	-5026.5	3716.2	-3185.0	-323.6	-92.0	66.2
263	ok	0.16	0.2	2.49e-02	5.7	5.7	3.9	3.9	-5812.6	-2490.4	-3040.9	7.7	-25.6	196.5
264	ok	0.16	0.2	2.25e-02	5.7	5.7	3.9	3.9	-5835.5	3511.8	-3303.4	-445.3	-131.3	63.2
265	ok	0.16	0.2	2.39e-02	5.7	5.7	3.9	3.9	-5961.9	2855.2	-3071.2	-558.9	-160.1	35.0
266	ok	0.16	0.2	2.57e-02	5.7	5.7	3.9	3.9	-7090.5	1176.6	2688.0	-605.2	-265.0	-20.2
267	ok	0.16	0.3	2.80e-02	5.7	5.7	3.9	3.9	-7965.1	563.5	3632.4	-839.5	-313.2	-101.7
268	ok	0.16	0.4	3.12e-02	5.7	5.7	3.9	3.9	-8646.6	-3296.9	1054.1	-783.9	-218.4	-180.5
269	ok	0.16	0.4	3.33e-02	5.7	5.7	3.9	3.9	-9495.9	-7953.1	2629.0	-990.9	-208.1	-171.5
270	ok	0.16	0.2	2.02e-02	5.7	5.7	3.9	3.9	-4664.1	2801.2	-3555.3	-305.9	-51.8	76.5
271	ok	0.16	0.1	2.55e-02	5.7	5.7	3.9	3.9	-5867.2	-3194.7	2717.9	12.6	26.6	216.0
272	ok	0.16	0.2	2.02e-02	5.7	5.7	3.9	3.9	-5056.3	3610.3	-3525.8	-443.7	-86.9	68.0
273	ok	0.16	0.2	2.05e-02	5.7	5.7	3.9	3.9	-4970.5	3380.6	-3346.1	-533.7	-110.0	40.9
274	ok	0.16	0.2	2.18e-02	5.7	5.7	3.9	3.9	-5476.5	2100.7	-2877.4	-601.9	-132.8	-2.4
275	ok	0.16	0.3	2.44e-02	5.7	5.7	3.9	3.9	-7251.7	1198.1	3121.4	-716.3	-265.8	-110.0
276	ok	0.16	0.4	2.86e-02	5.7	5.7	3.9	3.9	-7894.9	-321.2	4560.4	-1135.4	-312.5	-262.8
277	ok	0.16	0.4	3.17e-02	5.7	5.7	3.9	3.9	-8440.1	-6564.8	666.7	-886.7	-186.0	-134.7
278	ok	0.16	0.2	1.86e-02	5.7	5.7	3.9	3.9	-4449.7	-2167.3	1884.2	167.6	87.5	126.0
279	ok	0.16	9.43e-02	2.62e-02	5.7	5.7	3.9	3.9	-5962.9	-3841.3	2884.5	-3.1	37.4	208.7
280	ok	0.16	0.2	1.61e-02	5.7	5.7	3.9	3.9	-3927.5	-1494.0	2054.3	147.9	70.1	119.4
281	ok	0.16	0.2	1.47e-02	5.7	5.7	3.9	3.9	842.9	3134.9	-2636.0	-484.5	-53.0	51.0
282	ok	0.16	0.2	1.39e-02	5.7	5.7	3.9	3.9	396.6	2145.0	-3086.9	-541.7	-96.2	11.0
283	ok	0.16	0.2	1.66e-02	5.7	5.7	3.9	3.9	-5448.9	2152.7	2419.0	-537.8	-153.0	-96.6
284	ok	0.16	0.4	2.24e-02	5.7	5.7	3.9	3.9	-4609.1	1802.3	5114.3	-1045.5	-244.9	-288.3
285	ok	0.16	0.4	2.82e-02	5.7	5.7	3.9	3.9	-7492.0	-6835.6	1974.2	-714.6	-142.8	-173.5
286	ok	0.16	0.2	2.36e-02	5.7	5.7	3.9	3.9	-7435.7	249.7	2538.2	140.0	147.2	165.1
287	ok	0.16	8.49e-02	3.11e-02	5.7	5.7	3.9	3.9	-7356.4	-3474.1	3573.0	-71.9	56.3	211.2
288	ok	0.16	0.3	2.66e-02	5.7	5.7	3.9	3.9	-9508.7	1715.9	3331.7	194.6	170.8	107.1
289	ok	0.16	0.4	2.31e-02	5.7	5.7	3.9	3.9	2950.5	3707.8	-2209.7	-474.7	41.8	45.5
290	ok	0.16	0.4	2.07e-02	5.7	5.7	3.9	3.9	3125.7	2631.8	-3106.9	-456.2	39.0	19.1
291	ok	0.16	0.3	1.54e-02	5.7	5.7	3.9	3.9	2379.0	1965.7	3917.2	-332.1	202.8	-8.1
292	ok	0.16	0.3	1.72e-02	5.7	5.7	3.9	3.9	-1792.0	3496.5	3247.5	-673.2	-78.3	-246.4
293	ok	0.16	0.3	2.16e-02	5.7	5.7	3.9	3.9	-4780.6	-2822.1	2592.9	-905.9	-127.5	-383.9
294	ok	0.16	0.3	1.97e-02	5.7	5.7	3.9	3.9	7759.8	2423.0	2802.1	-313.1	44.3	-17.3
295	ok	0.16	0.4	1.95e-02	5.7	5.7	3.9	3.9	9525.3	2003.1	2892.1	-355.9	83.1	-8.0
296	ok	0.16	0.4	1.59e-02	5.7	5.7	3.9	3.9	1.294e+04	2455.5	-730.1	-483.8	110.0	12.4
297	ok	0.16	0.4	1.24e-02	5.7	5.7	3.9	3.9	1.203e+04	1992.1	-3953.1	-390.2	192.4	12.0
298	ok	0.16	0.3	1.01e-02	5.7	5.7	3.9	3.9	7347.9	2342.0	3973.5	-160.3	479.6	17.1
299	ok	0.16	0.4	1.12e-02	5.7	5.7	3.9	3.9	1.263e+04	2748.0	-274.3	-204.7	619.9	-68.7
690	ok	0.16	0.2	8.36e-03	5.7	5.7	3.9	3.9	5337.3	1491.9	-3158.7	-29.4	103.2	149.5
692	ok	0.16	0.3	7.89e-03	5.7	5.7	3.9	3.9	1.083e+04	-12.3	615.9	-169.0	134.2	-124.0
694	ok	0.16	0.2	6.39e-03	5.7	5.7	3.9	3.9	-1693.0	2199.9	1898.3	88.6	58.0	-158.3

Nodo		x/d	V N/M	ver. rid	Af pr-	Af pr+	Af sec-	Af sec+	N z	N o	N zo	M z	M o	M zo
									-9754.64	-9644.05	-4284.38	-1135.40	-935.19	-383.88
		0.16	0.43	0.03	5.65	5.65	3.93	3.93	1.294e+04	1.161e+04	5114.35	194.58	619.94	489.94

Nodo	Stato	Max tau daN/cm2	Ver V pr	Ver V sec	Af V pr	Af V sec	V pr daN/ m	V sec daN/ m
2	ok	0.61						
152	ok	0.43						
153	ok	0.43						
154	ok	0.84						
155	ok	0.42						
156	ok	0.42						
157	ok	0.42						
158	ok	0.42						
159	ok	0.42						
160	ok	0.42						
161	ok	0.43						
162	ok	0.43						
163	ok	0.52						
164	ok	0.52						

Viale Duca Alessandro n. 11 – 43123 Parma
Cell. 335 1403156 – E mail ing.concari@gmail.com
Sito web: studioaire.it – P.IVA 02561480340

165	ok	0.70
166	ok	0.26
167	ok	0.33
168	ok	0.28
169	ok	0.25
170	ok	0.22
171	ok	0.30
172	ok	0.43
173	ok	0.72
174	ok	0.27
175	ok	0.30
176	ok	0.21
177	ok	0.20
178	ok	0.25
179	ok	0.31
180	ok	0.38
181	ok	0.72
182	ok	0.34
183	ok	0.34
184	ok	0.22
185	ok	0.24
186	ok	0.28
187	ok	0.33
188	ok	0.40
189	ok	0.64
190	ok	0.34
191	ok	0.40
192	ok	0.25
193	ok	0.27
194	ok	0.31
195	ok	0.35
196	ok	0.46
197	ok	0.61
198	ok	0.28
199	ok	0.40
200	ok	0.27
201	ok	0.29
202	ok	0.33
203	ok	0.37
204	ok	0.48
205	ok	0.59
206	ok	0.33
207	ok	0.33
208	ok	0.29
209	ok	0.31
210	ok	0.34
211	ok	0.38
212	ok	0.48
213	ok	0.56
214	ok	0.33
215	ok	0.33
216	ok	0.30
217	ok	0.32
218	ok	0.35
219	ok	0.39
220	ok	0.49
221	ok	0.56
222	ok	0.33
223	ok	0.33
224	ok	0.31
225	ok	0.33
226	ok	0.36
227	ok	0.41
228	ok	0.51
229	ok	0.55
230	ok	0.33
231	ok	0.33
232	ok	0.31
233	ok	0.33
234	ok	0.36
235	ok	0.43
236	ok	0.53
237	ok	0.53
238	ok	0.32
239	ok	0.32
240	ok	0.31
241	ok	0.33
242	ok	0.37
243	ok	0.44
244	ok	0.55
245	ok	0.55
246	ok	0.30
247	ok	0.34
248	ok	0.30
249	ok	0.33
250	ok	0.37
251	ok	0.46
252	ok	0.57
253	ok	0.57
254	ok	0.33
255	ok	0.41
256	ok	0.29
257	ok	0.33
258	ok	0.37
259	ok	0.48
260	ok	0.59
261	ok	0.59
262	ok	0.33

Viale Duca Alessandro n. 11 – 43123 Parma
Cell. 335 1403156 – E mail ing.concari@gmail.com
Sito web: studioaire.it – P.IVA 02561480340

263	ok	0.41
264	ok	0.27
265	ok	0.32
266	ok	0.39
267	ok	0.51
268	ok	0.65
269	ok	0.62
270	ok	0.30
271	ok	0.34
272	ok	0.25
273	ok	0.31
274	ok	0.41
275	ok	0.55
276	ok	0.75
277	ok	0.68
278	ok	0.26
279	ok	0.34
280	ok	0.23
281	ok	0.33
282	ok	0.45
283	ok	0.60
284	ok	0.88
285	ok	0.75
286	ok	0.41
287	ok	0.61
288	ok	0.33
289	ok	0.39
290	ok	0.51
291	ok	0.73
292	ok	1.00
293	ok	0.92
294	ok	0.41
295	ok	0.33
296	ok	0.39
297	ok	0.51
298	ok	0.73
299	ok	1.00
690	ok	0.59
692	ok	0.92
694	ok	0.84

Nodo	Max tau	Ver V pr	Ver V sec	Af V pr	Af V sec	V pr	V sec
	1.00						

Macro Setto	Spessore	Id Materiale	Id Criterio	Progettazione
	cm			
4	25.00	1	1	Singolo elemento NON DISSIPATIVO

Nodo	Stato	x/d	V N/M	ver. rid	Af pr-	Af pr+	Af sec-	Af sec+	N z	N o	N zo	M z	M o	M zo
									daN/ m	daN/ m	daN/ m	daN	daN	daN
1	ok	0.16	9.37e-02	2.15e-02	5.7	5.7	3.9	3.9	-5107.6	-829.7	2892.5	-202.8	-234.5	230.8
4	ok	0.16	0.3	2.01e-02	5.7	5.7	3.9	3.9	-2687.0	-1252.5	4706.0	-178.4	-947.4	180.5
7	ok	0.16	0.5	2.33e-02	5.7	5.7	3.9	3.9	-4148.7	-2379.3	3918.5	-274.0	-1520.4	70.3
9	ok	0.16	0.5	2.56e-02	5.7	5.7	3.9	3.9	-4558.9	-3005.4	4214.5	-312.8	-1765.5	11.3
11	ok	0.16	0.5	2.54e-02	5.7	5.7	3.9	3.9	-4081.8	-3297.3	3265.2	-284.9	-1642.5	-51.6
13	ok	0.16	0.4	2.17e-02	5.7	5.7	3.9	3.9	1834.2	-2367.1	5864.5	-135.3	-899.0	14.2
15	ok	0.16	0.3	1.43e-02	5.7	5.7	3.9	3.9	3835.4	430.0	5956.6	-61.9	-252.9	-11.9
152	ok	0.16	0.2	1.59e-02	5.7	5.7	3.9	3.9	-2747.5	-477.6	-3970.4	-94.2	-607.5	-273.3
155	ok	0.16	0.3	1.56e-02	5.7	5.7	3.9	3.9	-2500.7	-341.5	-3886.7	-116.4	-879.3	-161.5
157	ok	0.16	0.4	1.39e-02	5.7	5.7	3.9	3.9	-2399.9	-342.7	-3580.9	-116.6	-933.9	-36.3
159	ok	0.16	0.3	1.24e-02	5.7	5.7	3.9	3.9	-2157.7	640.7	2086.5	20.0	-208.7	174.0
161	ok	0.16	0.3	1.02e-02	5.7	5.7	3.9	3.9	1383.5	-511.4	-3077.1	-42.1	-402.2	132.5
163	ok	0.16	0.3	7.86e-03	5.7	5.7	3.9	3.9	4523.5	1457.3	-2109.9	-64.1	272.9	255.7
300	ok	0.16	0.3	1.28e-02	5.7	5.7	3.9	3.9	-1743.2	-927.0	-3078.2	210.6	123.9	-724.6
301	ok	0.16	0.3	8.87e-03	5.7	5.7	3.9	3.9	-85.8	-404.2	-3012.2	69.9	-101.7	-602.6
302	ok	0.16	0.3	1.50e-02	5.7	5.7	3.9	3.9	-2198.3	-416.3	-3542.5	356.1	232.1	-402.7
303	ok	0.16	0.2	1.66e-02	5.7	5.7	3.9	3.9	-2138.0	-394.5	-3642.3	436.9	307.4	-31.1
304	ok	0.16	0.2	1.77e-02	5.7	5.7	3.9	3.9	-2301.2	431.3	-3704.7	354.2	372.9	293.0
305	ok	0.16	0.3	1.79e-02	5.7	5.7	3.9	3.9	-2317.4	783.2	-3869.6	207.7	314.3	493.1
306	ok	0.16	0.3	1.87e-02	5.7	5.7	3.9	3.9	-3540.7	-578.3	-4674.7	-273.2	46.1	492.1
307	ok	0.16	0.3	1.96e-02	5.7	5.7	3.9	3.9	-2919.6	-1345.4	-3352.0	-1501.8	-340.4	-112.5
308	ok	0.16	0.4	9.84e-03	5.7	5.7	3.9	3.9	-1282.4	179.0	-3179.3	435.9	303.1	-495.3
309	ok	0.16	0.2	7.39e-03	5.7	5.7	3.9	3.9	-228.2	-1298.7	-2010.4	-75.5	-20.4	-

Viale Duca Alessandro n. 11 – 43123 Parma
Cell. 335 1403156 – E mail ing.concari@gmail.com
Sito web: studioaire.it – P.IVA 02561480340

419.9														
310	ok	0.16	0.4	1.37e-02	5.7	5.7	3.9	3.9	-1706.3	33.1	-3509.8	800.7	492.2	-
283.4														
311	ok	0.16	0.3	1.70e-02	5.7	5.7	3.9	3.9	-2925.4	-216.3	-4340.6	924.2	584.9	-
10.9														
312	ok	0.16	0.3	2.03e-02	5.7	5.7	3.9	3.9	-3790.6	-275.0	-4524.6	857.0	560.5	
290.6														
313	ok	0.16	0.3	2.32e-02	5.7	5.7	3.9	3.9	-6199.8	30.0	-3268.9	388.1	387.2	
486.9														
314	ok	0.16	0.2	2.66e-02	5.7	5.7	3.9	3.9	-9660.4	-214.3	1733.5	-778.5	-126.8	
295.1														
315	ok	0.16	0.5	3.07e-02	5.7	5.7	3.9	3.9	-8156.7	-3835.1	-2536.6	-2543.3	-496.8	-
70.2														
316	ok	0.16	0.3	8.76e-03	5.7	5.7	3.9	3.9	-1339.5	1098.4	-2625.4	620.2	357.1	-
356.3														
317	ok	0.16	0.2	7.55e-03	5.7	5.7	3.9	3.9	-594.3	3067.9	2351.8	-50.7	79.1	-
213.0														
318	ok	0.16	0.4	1.19e-02	5.7	5.7	3.9	3.9	-1784.5	603.2	-2898.1	1133.5	587.4	-
196.7														
319	ok	0.16	0.3	1.60e-02	5.7	5.7	3.9	3.9	-4504.4	505.4	-2470.2	1290.5	677.6	45.1
320	ok	0.16	0.3	2.06e-02	5.7	5.7	3.9	3.9	-5100.8	334.1	-2481.6	1101.7	584.4	
248.4														
321	ok	0.16	0.2	2.50e-02	5.7	5.7	3.9	3.9	-6049.8	-1032.4	-3441.1	441.2	331.6	
352.0														
322	ok	0.16	0.2	3.02e-02	5.7	5.7	3.9	3.9	-1.035e+04	-1049.5	3296.8	-1042.0	-214.4	
186.9														
323	ok	0.16	0.6	3.52e-02	5.7	5.7	3.9	3.9	-1.111e+04	-4850.7	4797.6	-3027.6	-616.8	-
31.9														
324	ok	0.16	0.3	1.04e-02	5.7	5.7	3.9	3.9	-908.8	2771.7	2796.9	606.9	276.6	-
119.1														
325	ok	0.16	0.2	9.80e-03	5.7	5.7	3.9	3.9	-639.2	3409.4	3006.4	-50.1	63.3	-
128.8														
326	ok	0.16	0.4	1.27e-02	5.7	5.7	3.9	3.9	-2260.1	1903.0	2776.9	1005.7	418.5	-
35.6														
327	ok	0.16	0.3	1.60e-02	5.7	5.7	3.9	3.9	-3817.8	1398.8	2843.6	1155.9	457.8	56.3
328	ok	0.16	0.3	2.07e-02	5.7	5.7	3.9	3.9	-5617.8	948.6	3103.7	937.2	359.7	
132.3														
329	ok	0.16	0.2	2.65e-02	5.7	5.7	3.9	3.9	-7158.6	-250.8	4040.2	238.4	119.5	
167.6														
330	ok	0.16	0.2	3.30e-02	5.7	5.7	3.9	3.9	-1.070e+04	-1816.8	4906.8	-1189.2	-269.6	
123.7														
331	ok	0.16	0.7	3.66e-02	5.7	5.7	3.9	3.9	-1.112e+04	-4455.2	4137.3	-3368.7	-690.3	8.5
332	ok	0.16	0.3	1.16e-02	5.7	5.7	3.9	3.9	-876.4	3124.0	3661.8	661.0	223.9	-
37.0														
333	ok	0.16	0.2	1.15e-02	5.7	5.7	3.9	3.9	-393.7	4962.4	4019.1	-69.8	-75.4	-
18.7														
334	ok	0.16	0.3	1.45e-02	5.7	5.7	3.9	3.9	-2156.7	1959.2	3835.6	1082.7	378.1	2.1
335	ok	0.16	0.4	1.81e-02	5.7	5.7	3.9	3.9	-3381.0	1036.8	4354.5	1215.9	419.6	33.5
336	ok	0.16	0.3	2.29e-02	5.7	5.7	3.9	3.9	-4872.5	282.9	4834.0	980.3	329.0	64.8
337	ok	0.16	0.2	2.81e-02	5.7	5.7	3.9	3.9	-6399.9	-754.2	5366.2	232.6	100.5	83.9
338	ok	0.16	0.3	3.37e-02	5.7	5.7	3.9	3.9	-9671.5	-2208.0	6148.7	-1215.8	-283.8	90.8
339	ok	0.16	0.8	3.69e-02	5.7	5.7	3.9	3.9	-1.006e+04	-4408.2	5284.3	-3472.9	-708.3	64.2
340	ok	0.16	0.3	1.30e-02	5.7	5.7	3.9	3.9	-815.1	2513.5	4417.2	658.6	224.5	68.8
341	ok	0.16	0.2	1.02e-02	5.7	5.7	3.9	3.9	-545.1	4318.7	4198.0	-67.1	-44.6	60.2
342	ok	0.16	0.4	1.58e-02	5.7	5.7	3.9	3.9	-1677.7	1438.2	4832.9	1085.5	377.9	43.9
343	ok	0.16	0.4	1.98e-02	5.7	5.7	3.9	3.9	-2818.7	652.9	5378.4	1222.6	424.0	19.9
344	ok	0.16	0.3	2.43e-02	5.7	5.7	3.9	3.9	-4041.2	-157.5	6016.0	993.2	342.8	10.9
345	ok	0.16	0.2	2.87e-02	5.7	5.7	3.9	3.9	-5303.2	-1122.2	6532.5	250.6	120.6	16.9
346	ok	0.16	0.3	3.34e-02	5.7	5.7	3.9	3.9	-6546.4	-2182.5	6793.0	-1175.9	-230.0	58.0
347	ok	0.16	0.8	3.73e-02	5.7	5.7	3.9	3.9	-9786.1	-6502.6	3926.9	-3937.0	-784.0	52.8
348	ok	0.16	0.4	1.34e-02	5.7	5.7	3.9	3.9	-385.2	1766.7	4697.8	624.2	240.4	
143.6														
349	ok	0.16	0.3	1.28e-02	5.7	5.7	3.9	3.9	-154.8	5036.5	4741.8	-73.3	4.2	
154.0														
350	ok	0.16	0.4	1.70e-02	5.7	5.7	3.9	3.9	-1067.3	986.7	5428.5	1017.9	395.4	88.3
351	ok	0.16	0.4	2.13e-02	5.7	5.7	3.9	3.9	-1884.4	187.0	6150.9	1170.2	452.4	12.0
352	ok	0.16	0.3	2.53e-02	5.7	5.7	3.9	3.9	-5305.0	-922.8	4270.1	1337.2	526.4	-
75.0														
353	ok	0.16	0.2	2.88e-02	5.7	5.7	3.9	3.9	-6692.4	-2056.4	4402.0	478.2	263.5	-
98.4														
354	ok	0.16	0.3	3.32e-02	5.7	5.7	3.9	3.9	-7221.8	-3505.1	4521.9	-1263.6	-189.2	-
37.1														
355	ok	0.16	0.8	3.66e-02	5.7	5.7	3.9	3.9	-8888.7	-5461.3	3629.2	-3750.8	-742.8	90.2
356	ok	0.16	0.4	1.36e-02	5.7	5.7	3.9	3.9	-306.3	1462.8	4591.9	557.6	241.0	
245.8														
357	ok	0.16	0.3	9.32e-03	5.7	5.7	3.9	3.9	-171.7	3218.0	4385.9	-83.3	-27.7	
252.1														
358	ok	0.16	0.4	1.76e-02	5.7	5.7	3.9	3.9	-633.1	487.8	5512.1	916.0	417.7	
141.2														
359	ok	0.16	0.4	2.14e-02	5.7	5.7	3.9	3.9	-1155.4	-627.8	6636.3	1042.8	481.0	13.0
360	ok	0.16	0.3	2.47e-02	5.7	5.7	3.9	3.9	-4414.0	-1290.4	5231.2	1237.1	584.6	-
145.2														
361	ok	0.16	0.2	2.82e-02	5.7	5.7	3.9	3.9	-5603.4	-2081.3	5298.9	536.0	322.5	-
208.6														
362	ok	0.16	0.3	3.28e-02	5.7	5.7	3.9	3.9	-6424.3	-3312.4	5215.7	-1032.7	-123.6	-
152.6														
363	ok	0.16	0.7	3.47e-02	5.7	5.7	3.9	3.9	-7424.8	-4883.3	4331.4	-3343.1	-654.4	
110.1														
364	ok	0.16	0.4	1.44e-02	5.7	5.7	3.9	3.9	-239.9	214.7	4644.8	448.6	223.9	
367.3														
365	ok	0.16	0.3	1.06e-02	5.7	5.7	3.9	3.9	-419.5	2941.6	2722.6	-133.0	4.4	
445.5														
366	ok	0.16	0.4	1.89e-02	5.7	5.7	3.9	3.9	-301.9	-517.4	5862.4	718.2	382.0	
212.8														
367	ok	0.16	0.4	2.17e-02	5.7	5.7	3.9	3.9	-2505.5	-1105.4	5469.8	1172.5	646.7	22.3
368	ok	0.16	0.3	2.51e-02	5.7	5.7	3.9	3.9	-3384.8	-1647.4	5941.3	1045.1	596.5	-
211.2														
369	ok	0.16	0.2	2.84e-02	5.7	5.7	3.9	3.9	-4320.1	-2052.9	5985.9	511.3	382.1	-

Viale Duca Alessandro n. 11 – 43123 Parma
Cell. 335 1403156 – E mail ing.concari@gmail.com
Sito web: studioaire.it – P.IVA 02561480340

332.6														
370	ok	0.16	0.3	3.13e-02	5.7	5.7	3.9	3.9	-5122.8	-2849.7	5925.2	-770.5	-36.3	-
265.9														
371	ok	0.16	0.6	3.13e-02	5.7	5.7	3.9	3.9	-5888.5	-3938.1	4848.4	-2769.9	-531.8	
111.5														
372	ok	0.16	0.4	1.52e-02	5.7	5.7	3.9	3.9	-226.7	-743.1	4374.9	284.6	125.1	
468.9														
373	ok	0.16	0.3	1.16e-02	5.7	5.7	3.9	3.9	-550.4	1969.3	3027.7	-84.4	57.3	
520.8														
374	ok	0.16	0.4	1.89e-02	5.7	5.7	3.9	3.9	-1491.0	-1105.6	4903.3	657.0	390.2	
331.9														
375	ok	0.16	0.3	2.21e-02	5.7	5.7	3.9	3.9	-1886.4	-1837.0	5681.0	783.5	477.2	43.8
376	ok	0.16	0.3	2.58e-02	5.7	5.7	3.9	3.9	-2293.5	-2127.9	6269.3	731.0	475.2	-
252.7														
377	ok	0.16	0.2	2.77e-02	5.7	5.7	3.9	3.9	-2234.3	-1878.5	6684.7	357.5	340.7	-
445.3														
378	ok	0.16	0.3	2.83e-02	5.7	5.7	3.9	3.9	-2878.9	-1712.7	6422.4	-442.1	74.3	-
378.7														
379	ok	0.16	0.5	2.63e-02	5.7	5.7	3.9	3.9	-4129.4	-2692.6	5076.6	-1943.0	-362.8	91.9
380	ok	0.16	0.3	1.60e-02	5.7	5.7	3.9	3.9	-1344.4	-1733.7	3541.2	140.4	-32.9	
683.0														
381	ok	0.16	0.3	1.28e-02	5.7	5.7	3.9	3.9	1508.6	2264.6	1629.8	120.4	-85.5	
445.9														
382	ok	0.16	0.2	1.94e-02	5.7	5.7	3.9	3.9	-1943.4	-1532.1	5192.9	217.4	-206.2	
338.9														
383	ok	0.16	0.2	2.33e-02	5.7	5.7	3.9	3.9	-2253.4	-2256.7	5820.1	267.4	-219.7	67.1
384	ok	0.16	0.2	2.56e-02	5.7	5.7	3.9	3.9	-1891.7	-2419.0	6191.1	259.0	-169.0	-
236.2														
385	ok	0.16	0.3	2.58e-02	5.7	5.7	3.9	3.9	1778.1	-2033.2	7286.6	161.8	-26.8	-
311.8														
386	ok	0.16	0.3	2.32e-02	5.7	5.7	3.9	3.9	-2016.4	-1065.5	6477.1	-184.4	-25.0	-
423.7														
387	ok	0.16	0.3	2.10e-02	5.7	5.7	3.9	3.9	-2027.7	-1152.6	4869.7	-915.7	-159.8	52.5
690	ok	0.16	0.3	8.39e-03	5.7	5.7	3.9	3.9	7359.8	-288.9	-472.8	-682.5	70.2	21.4
691	ok	0.16	0.3	5.14e-03	5.7	5.7	3.9	3.9	8304.5	3488.6	4643.2	-90.1	21.2	13.0
694	ok	0.16	7.62e-02	2.06e-02	5.7	5.7	3.9	3.9	-5166.2	-1760.9	-2290.2	-232.1	-111.3	-
369.5														

Nodo	x/d	V N/M	ver. rid	Af pr-	Af pr+	Af sec-	Af sec+	N z	N o	N zo	M z	M o	M zo
								-1.112e+04	-6502.59	-4674.71	-3936.96	-1765.50	-
724.56													
	0.16	0.76	0.04	5.65	5.65	3.93	3.93	8304.50	5036.51	7286.57	1337.24	677.55	
682.96													

Nodo	Stato	Max tau daN/cm2	Ver V pr	Ver V sec	Af V pr	Af V sec	V pr daN/ m	V sec daN/ m
1	ok	0.88						
4	ok	1.23						
7	ok	1.59						
9	ok	1.66						
11	ok	1.66						
13	ok	1.41						
15	ok	0.89						
152	ok	1.02						
155	ok	1.28						
157	ok	1.29						
159	ok	1.29						
161	ok	1.00						
163	ok	1.33						
300	ok	1.02						
301	ok	0.80						
302	ok	1.28						
303	ok	1.29						
304	ok	1.29						
305	ok	1.02						
306	ok	1.99						
307	ok	1.99						
308	ok	0.74						
309	ok	0.80						
310	ok	0.76						
311	ok	0.72						
312	ok	0.75						
313	ok	1.47						
314	ok	2.45						
315	ok	2.45						
316	ok	0.89						
317	ok	0.90						
318	ok	0.63						
319	ok	0.43						
320	ok	0.94						
321	ok	1.76						
322	ok	2.72						
323	ok	2.70						
324	ok	0.97						
325	ok	0.98						
326	ok	0.68						
327	ok	0.36						
328	ok	1.05						
329	ok	1.90						
330	ok	2.84						
331	ok	2.83						
332	ok	1.02						
333	ok	1.02						
334	ok	0.70						
335	ok	0.37						

Viale Duca Alessandro n. 11 – 43123 Parma
Cell. 335 1403156 – E mail ing.concari@gmail.com
Sito web: studioaire.it – P.IVA 02561480340

336	ok	1.08
337	ok	1.93
338	ok	2.86
339	ok	2.86
340	ok	1.02
341	ok	1.02
342	ok	0.70
343	ok	0.37
344	ok	1.08
345	ok	1.93
346	ok	2.86
347	ok	2.86
348	ok	1.02
349	ok	1.02
350	ok	0.70
351	ok	0.36
352	ok	1.06
353	ok	1.90
354	ok	2.82
355	ok	2.82
356	ok	0.96
357	ok	0.97
358	ok	0.68
359	ok	0.33
360	ok	0.97
361	ok	1.78
362	ok	2.71
363	ok	2.69
364	ok	0.87
365	ok	0.88
366	ok	0.62
367	ok	0.52
368	ok	0.82
369	ok	1.56
370	ok	2.49
371	ok	2.46
372	ok	0.71
373	ok	0.71
374	ok	0.93
375	ok	0.94
376	ok	0.94
377	ok	1.19
378	ok	2.10
379	ok	2.05
380	ok	1.23
381	ok	0.88
382	ok	1.59
383	ok	1.66
384	ok	1.66
385	ok	1.41
386	ok	1.41
387	ok	1.39
690	ok	1.31
691	ok	0.63
694	ok	0.80

Nodo	Max tau	Ver V pr	Ver V sec	Af V pr	Af V sec	V pr	V sec
	2.86						

Macro Setto	Spessore	Id Materiale	Id Criterio	Progettazione
	cm			
5	25.00	1	1	Singolo elemento NON DISSIPATIVO

Nodo	Stato	x/d	V N/M	ver. rid	Af pr-	Af pr+	Af sec-	Af sec+	N z	N o	N zo	M z	M o	M zo
									daN/ m	daN/ m	daN/ m	daN	daN	daN
2	ok	0.16	0.4	3.01e-02	5.7	5.7	3.9	3.9	-1293.2	7680.9	-1.039e+04	168.5	-59.0	67.7
294	ok	0.16	0.3	2.92e-02	5.7	5.7	3.9	3.9	1069.2	-360.8	-1.159e+04	43.8	-99.8	12.6
295	ok	0.16	0.4	2.94e-02	5.7	5.7	3.9	3.9	3609.7	5785.9	-7961.6	-19.7	-125.9	26.5
296	ok	0.16	0.5	2.10e-02	5.7	5.7	3.9	3.9	7104.7	2150.9	-1.091e+04	-46.0	-221.1	23.1
297	ok	0.16	0.4	2.29e-02	5.7	5.7	3.9	3.9	7582.6	-1118.3	-9486.5	-55.8	-297.1	13.1
298	ok	0.16	0.4	1.90e-02	5.7	5.7	3.9	3.9	3019.3	994.1	9276.0	-33.8	-308.8	-59.8
299	ok	0.16	0.5	1.72e-02	5.7	5.7	3.9	3.9	339.1	3062.6	6288.0	-134.2	-278.7	-48.8
388	ok	0.16	0.3	5.23e-02	5.7	5.7	3.9	3.9	-1.726e+04	2975.8	-8625.4	17.9	-76.0	29.2
389	ok	0.16	0.6	2.36e-02	5.7	5.7	3.9	3.9	1193.2	9042.9	-1.013e+04	-26.9	-103.0	51.7
390	ok	0.17	1.0	9.68e-02	6.9	6.8	5.2	5.1	-3.259e+04	-2.565e+04	8662.7	-1.6	-92.5	13.1
391	ok	0.16	0.4	9.92e-02	5.7	5.7	3.9	3.9	-1.090e+04	4522.9	-8255.5	-30.7	-154.8	17.9
392	ok	0.16	0.3	6.94e-02	5.7	5.7	3.9	3.9	-9962.5	2234.0	-9109.3	-49.0	-139.3	5.4
393	ok	0.16	0.2	5.35e-02	5.7	5.7	3.9	3.9	-9950.8	48.7	-5424.8	-3.1	-112.2	-91.6
394	ok	0.16	0.3	7.26e-02	5.7	5.7	3.9	3.9	-1.244e+04	-4246.4	-8305.9	463.3	37.2	140.1
395	ok	0.16	0.7	5.77e-02	5.7	5.7	3.9	3.9	-1.287e+04	-1740.2	6090.7	607.8	199.2	104.8
396	ok	0.16	0.5	4.78e-02	5.7	5.7	3.9	3.9	-6006.9	2604.3	-5063.7	20.3	-50.5	-51.5
397	ok	0.16	0.6	1.45e-02	5.7	5.7	3.9	3.9	-4806.2	1.825e+04	-4582.8	2.8	-25.7	18.6
398	ok	0.16	0.4	0.1	5.7	5.7	3.9	3.9	-4.169e+04	-3.868e+04	1.472e+04	56.7	-82.2	44.3
399	ok	0.16	0.9	0.1	5.7	5.7	3.9	3.9	-4.331e+04	-4126.3	1.220e+04	-85.9	40.4	7.7
400	ok	0.16	0.2	9.75e-02	5.7	5.7	3.9	3.9	-3.711e+04	-3149.8	6197.4	-26.0	33.4	-23.3

Viale Duca Alessandro n. 11 – 43123 Parma
Cell. 335 1403156 – E mail ing.concari@gmail.com
Sito web: studioaire.it – P.IVA 02561480340

401	ok	0.16	0.1	9.89e-02	5.7	5.7	3.9	3.9	-2.918e+04	61.2	-198.6	68.8	28.5	-
42.1														
402	ok	0.16	0.4	0.1	5.7	5.7	3.9	3.9	-3.647e+04	2699.0	1509.5	655.9	5.7	5.3
403	ok	0.16	0.3	0.2	5.7	5.7	3.9	3.9	-5.659e+04	-8667.0	-1.285e+04	1899.8	96.6	
216.2														
692	ok	0.16	0.6	2.03e-02	5.7	5.7	3.9	3.9	1.593e+04	1137.4	2907.0	1030.6	-31.1	41.4

Nodo		x/d	V N/M	ver. rid	Af pr-	Af pr+	Af sec-	Af sec+	N z	N o	N zo	M z	M o	M
zo														
									-5.659e+04	-3.868e+04	-1.285e+04	-134.20	-308.80	-
91.56														
		0.17	0.99	0.19	6.93	6.85	5.20	5.12	1.593e+04	1.825e+04	1.472e+04	1899.82	199.23	
216.21														

Nodo	Stato	Max tau daN/cm2	Ver V pr	Ver V sec	Af V pr	Af V sec	V pr daN/ m	V sec daN/ m
2	ok	0.34						
294	ok	0.30						
295	ok	0.32						
296	ok	0.39						
297	ok	0.43						
298	ok	0.80						
299	ok	1.41						
388	ok	0.30						
389	ok	0.34						
390	ok	0.33						
391	ok	0.39						
392	ok	0.43						
393	ok	0.80						
394	ok	1.41						
395	ok	1.41						
396	ok	0.11						
397	ok	0.22						
398	ok	0.33						
399	ok	0.29						
400	ok	0.24						
401	ok	0.57						
402	ok	1.07						
403	ok	1.07						
692	ok	1.41						

Nodo	Max tau	Ver V pr	Ver V sec	Af V pr	Af V sec	V pr	V sec
	1.41						

Macro Setto	Spessore	Id Materiale	Id Criterio	Progettazione
	cm			
6	25.00	1	1	Singolo elemento NON DISSIPATIVO

Nodo	Stato	x/d	V N/M	ver. rid	Af pr-	Af pr+	Af sec-	Af sec+	N z	N o	N zo	M z	M o	M
zo														
									daN/ m	daN/ m	daN/ m	daN	daN	daN
396	ok	0.16	0.5	5.41e-02	5.7	5.7	3.9	3.9	-1.404e+04	-3436.5	1.111e+04	-0.5	-60.6	8.6
397	ok	0.16	0.6	1.89e-02	5.7	5.7	3.9	3.9	-4421.8	1.680e+04	6299.9	10.0	-7.9	18.0
398	ok	0.16	0.5	0.1	5.7	5.7	3.9	3.9	-1.570e+04	-3.333e+04	1.327e+04	-9.8	-84.6	-3.0
404	ok	0.16	0.3	5.02e-02	5.7	5.7	3.9	3.9	-1.250e+04	1038.1	1.205e+04	-6.5	-34.1	-
15.4														
405	ok	0.16	0.7	2.24e-02	5.7	5.7	3.9	3.9	-4456.1	2.026e+04	6701.8	0.9	-12.5	-4.0
406	ok	0.16	0.9	8.66e-02	5.7	5.7	3.9	3.9	-1.024e+04	-2.759e+04	1.124e+04	-10.0	-37.5	-4.4
412	ok	0.16	0.4	3.14e-02	5.7	5.7	3.9	3.9	-642.8	1114.9	6551.8	-2.5	24.1	-
27.4														
413	ok	0.16	0.6	2.62e-02	5.7	5.7	3.9	3.9	614.3	5998.1	1.011e+04	6.8	73.7	-0.6
414	ok	0.16	0.4	5.32e-02	5.7	5.7	3.9	3.9	1330.4	-1.773e+04	7445.8	-10.6	-15.6	-
18.5														
420	ok	0.16	0.4	2.62e-02	5.7	5.7	3.9	3.9	-6582.5	4459.2	-7308.6	40.5	60.2	-
46.2														
421	ok	0.16	0.6	2.05e-02	5.7	5.7	3.9	3.9	-1934.9	1.640e+04	-6050.9	36.8	74.5	-
51.6														
422	ok	0.16	0.5	6.11e-02	5.7	5.7	3.9	3.9	-1.418e+04	-1.122e+04	-1.085e+04	35.7	37.1	-
43.8														
428	ok	0.16	0.3	5.41e-02	5.7	5.7	3.9	3.9	-2786.1	1674.0	-7697.4	31.1	90.7	-
41.9														
429	ok	0.16	0.7	1.69e-02	5.7	5.7	3.9	3.9	-2126.8	1.751e+04	-6908.3	15.9	24.9	-
36.1														
430	ok	0.16	0.5	4.47e-02	5.7	5.7	3.9	3.9	2152.6	-1.270e+04	-4167.8	50.6	68.5	-
32.1														

Nodo		x/d	V N/M	ver. rid	Af pr-	Af pr+	Af sec-	Af sec+	N z	N o	N zo	M z	M o	M
zo														
									-1.570e+04	-3.333e+04	-1.085e+04	-10.58	-84.61	-
51.63														
		0.16	0.87	0.11	5.65	5.65	3.93	3.93	2152.65	2.026e+04	1.327e+04	50.57	90.73	
18.04														

Nodo	Stato	Max tau daN/cm2	Ver V pr	Ver V sec	Af V pr	Af V sec	V pr daN/ m	V sec daN/ m
396	ok	0.12						
397	ok	0.24						
398	ok	0.39						
404	ok	0.12						
405	ok	0.24						

Viale Duca Alessandro n. 11 – 43123 Parma
Cell. 335 1403156 – E mail ing.concari@gmail.com
Sito web: studioaire.it – P.IVA 02561480340

406	ok	0.39
412	ok	0.16
413	ok	0.51
414	ok	0.22
420	ok	0.16
421	ok	0.75
422	ok	0.15
428	ok	0.16
429	ok	0.75
430	ok	0.15

Nodo	Max tau	Ver V pr	Ver V sec	Af V pr	Af V sec	V pr	V sec
	0.75						

Macro Setto	Spessore	Id Materiale	Id Criterio	Progettazione
	cm			
8	25.00	1	1	Singolo elemento NON DISSIPATIVO

Nodo	Stato	x/d	V N/M	ver. rid	Af pr-	Af pr+	Af sec-	Af sec+	N z	N o	N zo	M z	M o	M zo
									daN/ m	daN/ m	daN/ m	daN	daN	daN
428	ok	0.16	0.3	4.80e-02	5.7	5.7	3.9	3.9	-6405.3	2832.9	-4738.1	-40.0	82.0	-53.7
429	ok	0.16	0.6	6.58e-03	5.7	5.7	3.9	3.9	-2109.0	1.763e+04	-680.8	20.4	31.1	-18.0
430	ok	0.18	1.0	7.15e-02	7.7	7.4	5.1	4.8	1.686e+04	-1.179e+04	-1.481e+04	-173.8	128.7	55.5
431	ok	0.16	0.7	5.38e-02	5.7	5.7	3.9	3.9	1.863e+04	-3108.5	-3992.4	229.5	-7.5	14.8
432	ok	0.16	0.3	8.91e-02	5.7	5.7	3.9	3.9	-2.603e+04	242.0	3560.8	466.3	0.5	22.6
433	ok	0.16	0.3	0.2	5.7	5.7	3.9	3.9	-4.670e+04	-173.5	3475.8	765.3	-6.95e-02	22.5
434	ok	0.16	0.7	0.2	5.7	5.7	3.9	3.9	-6.888e+04	5504.9	-24.8	1045.7	-19.6	32.6
435	ok	0.16	0.3	0.3	5.7	5.7	3.9	3.9	-8.958e+04	-1.297e+04	1.244e+04	1452.5	94.8	-71.1
436	ok	0.16	0.6	4.78e-02	5.7	5.7	3.9	3.9	-1.228e+04	3446.6	6593.3	-23.3	67.1	7.3
437	ok	0.16	0.6	8.70e-03	5.7	5.7	3.9	3.9	-1950.5	1.675e+04	4319.6	18.5	20.8	19.9
438	ok	0.16	0.3	0.3	5.7	5.7	3.9	3.9	-4.279e+04	-2.726e+04	-2120.5	-66.0	157.6	88.4
439	ok	0.16	0.9	0.2	5.7	5.7	3.9	3.9	-5.534e+04	2.616e+04	-7996.4	294.6	-8.2	22.5
440	ok	0.16	0.2	0.1	5.7	5.7	3.9	3.9	-3.411e+04	-218.7	3881.2	466.1	0.5	0.7
441	ok	0.16	0.5	5.94e-02	5.7	5.7	3.9	3.9	-1.344e+04	242.1	3966.1	765.6	-0.2	1.0
442	ok	0.16	1.0	5.07e-02	5.7	5.7	3.9	3.9	7209.0	-1701.9	7466.7	1083.7	-15.9	-3.6
443	ok	0.20	1.0	3.58e-02	8.0	9.7	4.4	4.6	2.791e+04	-832.9	-4995.3	1275.4	91.9	48.0
Nodo		x/d	V N/M	ver. rid	Af pr-	Af pr+	Af sec-	Af sec+	N z	N o	N zo	M z	M o	M zo
									-8.958e+04	-2.726e+04	-1.481e+04	-173.81	-19.65	-71.10
		0.20	0.99	0.30	8.03	9.67	5.11	4.83	2.791e+04	2.616e+04	1.244e+04	1452.47	157.62	88.37

Nodo	Stato	Max tau	Ver V pr	Ver V sec	Af V pr	Af V sec	V pr	V sec
		daN/cm2					daN/ m	daN/ m
428	ok	0.18						
429	ok	0.50						
430	ok	0.16						
431	ok	0.27						
432	ok	0.33						
433	ok	0.41						
434	ok	0.57						
435	ok	0.57						
436	ok	0.18						
437	ok	0.50						
438	ok	0.16						
439	ok	0.27						
440	ok	0.33						
441	ok	0.41						
442	ok	0.57						
443	ok	0.57						

Nodo	Max tau	Ver V pr	Ver V sec	Af V pr	Af V sec	V pr	V sec
	0.57						

Macro Setto	Spessore	Id Materiale	Id Criterio	Progettazione
	cm			
10	25.00	1	1	Singolo elemento NON DISSIPATIVO

Nodo	Stato	x/d	V N/M	ver. rid	Af pr-	Af pr+	Af sec-	Af sec+	N z	N o	N zo	M z	M o	M zo
									daN/ m	daN/ m	daN/ m	daN	daN	daN
436	ok	0.16	0.5	6.74e-02	5.7	5.7	3.9	3.9	-1.725e+04	7362.2	1.741e+04	5.4	66.8	44.8
437	ok	0.16	0.6	2.55e-02	5.7	5.7	3.9	3.9	-3034.6	1.012e+04	1.175e+04	2.7	35.9	45.0
438	ok	0.16	0.1	0.1	5.7	5.7	3.9	3.9	-2.929e+04	-1.456e+04	2.420e+04	24.2	82.1	62.8
444	ok	0.16	0.7	7.36e-02	5.7	5.7	3.9	3.9	-1.250e+04	5474.9	2.341e+04	12.6	40.5	75.0
445	ok	0.16	0.5	5.00e-02	5.7	5.7	3.9	3.9	-3741.9	3832.0	1.501e+04	2.8	25.0	61.5
446	ok	0.16	0.7	3.97e-02	5.7	5.7	3.9	3.9	-583.1	1.327e+04	1.227e+04	14.7	63.4	79.1
452	ok	0.16	0.9	4.08e-02	5.7	5.7	3.9	3.9	-537.4	6797.2	1.674e+04	19.5	42.1	98.6
453	ok	0.16	0.4	6.07e-02	5.7	5.7	3.9	3.9	4493.2	-1.464e+04	1.377e+04	-1.4	10.3	94.0
454	ok	0.17	1.0	8.38e-02	6.2	6.3	4.5	4.8	644.2	1.929e+04	1.221e+04	20.3	71.5	94.7

Viale Duca Alessandro n. 11 – 43123 Parma
Cell. 335 1403156 – E mail ing.concari@gmail.com
Sito web: studioaire.it – P.IVA 02561480340

460	ok	0.16	0.8	3.26e-02	5.7	5.7	3.9	3.9	1.880e+04	4260.5	1.725e+04	32.3	69.0	
127.8														
461	ok	0.16	0.2	6.11e-02	5.7	5.7	3.9	3.9	3550.7	-2.053e+04	8654.3	-20.9	17.0	63.7
462	ok	0.19	1.0	1.71e-02	8.2	9.2	7.7	8.2	2.988e+04	4.708e+04	2.355e+04	38.5	94.0	
116.1														

Nodo	x/d	V N/M	ver. rid	Af pr-	Af pr+	Af sec-	Af sec+	N z	N o	N zo	M z	M o	M zo
								-2.929e+04	-2.053e+04	8654.26	-20.89	10.29	
44.85													
	0.19	0.99	0.14	8.16	9.24	7.75	8.15	2.988e+04	4.708e+04	2.420e+04	38.49	94.00	
127.85													

Nodo	Stato	Max tau daN/cm2	Ver V pr	Ver V sec	Af V pr	Af V sec	V pr daN/ m	V sec daN/ m
436	ok	0.21						
437	ok	0.20						
438	ok	0.12						
444	ok	0.21						
445	ok	0.21						
446	ok	0.19						
452	ok	0.17						
453	ok	0.25						
454	ok	0.43						
460	ok	0.17						
461	ok	0.25						
462	ok	0.43						

Nodo	Max tau	Ver V pr	Ver V sec	Af V pr	Af V sec	V pr	V sec
	0.43						

Macro Setto	Spessore	Id Materiale	Id Criterio	Progettazione
	cm			
9	25.00	1	1	Singolo elemento NON DISSIPATIVO

Nodo	Stato	x/d	V N/M	ver. rid	Af pr-	Af pr+	Af sec-	Af sec+	N z	N o	N zo	M z	M o	M zo
									daN/ m	daN/ m	daN/ m	daN	daN	daN
3	ok	0.16	0.4	3.99e-02	5.7	5.7	3.9	3.9	-2150.5	-8007.4	-9855.1	-51.4	146.0	44.5
146	ok	0.16	0.3	3.91e-02	5.7	5.7	3.9	3.9	-6771.3	-876.4	745.2	97.0	339.5	
241.1														
147	ok	0.16	0.3	5.78e-02	5.7	5.7	3.9	3.9	-1.426e+04	-9041.1	-5784.8	145.9	629.2	
147.3														
148	ok	0.16	0.4	5.96e-02	5.7	5.7	3.9	3.9	-1.769e+04	-5761.8	-5241.1	184.1	742.6	43.6
149	ok	0.16	0.5	5.78e-02	5.7	5.7	3.9	3.9	-1188.1	-2724.7	1.979e+04	21.4	33.8	-
15.3														
150	ok	0.16	0.6	4.64e-02	5.7	5.7	3.9	3.9	6802.5	-775.0	1.963e+04	17.3	-119.2	-
56.5														
151	ok	0.16	0.7	2.93e-02	5.7	5.7	3.9	3.9	1.871e+04	-62.5	1.333e+04	128.0	-303.5	-
91.0														
460	ok	0.16	0.5	5.45e-02	5.7	5.7	3.9	3.9	2.187e+04	-3935.0	-266.9	24.8	50.9	
114.3														
461	ok	0.16	0.2	5.38e-02	5.7	5.7	3.9	3.9	3870.0	-2.022e+04	-2431.9	-15.1	27.6	58.0
462	ok	0.23	1.0	7.86e-03	12.7	14.1	11.0	11.4	7.008e+04	5.888e+04	3.085e+04	177.1	79.9	
147.7														
463	ok	0.17	1.0	9.29e-02	5.9	6.2	4.1	4.2	4.428e+04	-5132.9	9685.1	110.6	-78.4	-
13.3														
464	ok	0.16	0.6	2.46e-02	5.7	5.7	3.9	3.9	1.616e+04	52.1	6915.9	54.6	-29.7	38.4
465	ok	0.16	0.3	4.15e-02	5.7	5.7	3.9	3.9	-9754.0	-1279.8	-5069.3	283.1	24.1	-
104.9														
466	ok	0.16	0.5	0.1	5.7	5.7	3.9	3.9	-3.164e+04	4831.5	-1164.5	513.9	-1.8	-
91.4														
467	ok	0.16	0.3	0.3	5.7	5.7	3.9	3.9	-8.048e+04	-1.538e+04	2.408e+04	1288.2	66.3	-
234.4														
468	ok	0.16	0.6	3.12e-02	5.7	5.7	3.9	3.9	6635.1	-1417.1	-4712.1	106.4	163.5	
247.0														
469	ok	0.16	0.2	5.54e-02	5.7	5.7	3.9	3.9	-59.6	-1.081e+04	-1.152e+04	16.1	116.7	84.6
470	ok	0.17	1.0	0.1	6.3	6.5	4.7	5.0	1.238e+04	12.0	-5072.6	204.5	414.6	
188.2														
471	ok	0.18	1.0	3.50e-02	7.0	7.4	5.3	5.6	3.939e+04	40.3	2.641e+04	60.5	67.7	52.1
472	ok	0.16	0.7	4.89e-02	5.7	5.7	3.9	3.9	1.111e+04	-2277.2	1.474e+04	47.6	42.6	35.0
473	ok	0.16	0.6	5.75e-02	5.7	5.7	3.9	3.9	3321.6	-1143.9	2.061e+04	110.2	-80.2	-
57.6														
474	ok	0.16	0.6	0.1	5.7	5.7	3.9	3.9	-1.044e+04	-9305.8	2.124e+04	366.9	59.6	-
289.0														
475	ok	0.16	1.0	3.82e-02	5.7	5.8	3.9	4.0	2.259e+04	-1881.9	2066.1	712.6	178.4	-
237.1														
693	ok	0.16	0.8	0.0	5.7	5.7	3.9	3.9	2.563e+04	6716.6	9197.8	441.1	-30.4	-
107.2														

Nodo	x/d	V N/M	ver. rid	Af pr-	Af pr+	Af sec-	Af sec+	N z	N o	N zo	M z	M o	M zo
								-8.048e+04	-2.022e+04	-1.152e+04	-51.41	-303.47	-
288.99													
	0.23	0.99	0.29	12.69	14.07	10.96	11.37	7.008e+04	5.888e+04	3.085e+04	1288.24	742.62	
246.96													

Nodo	Stato	Max tau daN/cm2	Ver V pr	Ver V sec	Af V pr	Af V sec	V pr daN/ m	V sec daN/ m
3	ok	0.30						

Viale Duca Alessandro n. 11 – 43123 Parma
Cell. 335 1403156 – E mail ing.concari@gmail.com
Sito web: studioaire.it – P.IVA 02561480340

146	ok	0.32
147	ok	0.35
148	ok	0.39
149	ok	0.34
150	ok	0.41
151	ok	0.99
460	ok	0.27
461	ok	0.26
462	ok	0.29
463	ok	0.25
464	ok	0.20
465	ok	0.35
466	ok	0.66
467	ok	0.66
468	ok	0.32
469	ok	0.30
470	ok	0.35
471	ok	0.39
472	ok	0.34
473	ok	0.41
474	ok	0.99
475	ok	0.89
693	ok	0.89

Nodo	Max tau	Ver V pr	Ver V sec	Af V pr	Af V sec	V pr	V sec
	0.99						

Macro Guscio	Spessore	Id Materiale	Id Criterio	Progettazione
	cm			
1	40.00	1	2	Singolo elemento

Nodo	Stato	x/d	V N/M	ver. rid	Af pr-	Af pr+	Af sec-	Af sec+	N x	N y	N xy	M x	M y	M xy
									daN/ m	daN/ m	daN/ m	daN	daN	daN
17	ok	0.09	0.2	6.98e-03	5.7	5.7	5.7	5.7	714.8	-2933.5	-1013.8	-154.3	-674.8	956.2
25	ok	0.09	0.3	8.62e-03	5.7	5.7	5.7	5.7	699.3	-3546.7	-1124.7	-373.2	-1714.3	1308.8
33	ok	0.09	0.4	1.01e-02	5.7	5.7	5.7	5.7	1291.3	-4573.8	-950.5	-614.2	-2746.0	1250.6
41	ok	0.09	0.4	1.16e-02	5.7	5.7	5.7	5.7	1349.4	-5072.2	-725.2	-752.7	-3517.5	1228.4
49	ok	0.09	0.5	1.28e-02	5.7	5.7	5.7	5.7	1365.2	-5362.2	-470.0	-861.2	-4107.5	1125.6
57	ok	0.09	0.5	1.37e-02	5.7	5.7	5.7	5.7	1378.5	-5527.5	-218.3	-944.6	-4543.5	962.5
65	ok	0.09	0.5	1.39e-02	5.7	5.7	5.7	5.7	1400.6	-5623.3	18.3	-1005.6	-4855.6	755.7
73	ok	0.09	0.5	1.42e-02	5.7	5.7	5.7	5.7	1431.6	-5681.5	235.8	-1047.5	-5069.8	517.6
81	ok	0.09	0.5	1.45e-02	5.7	5.7	5.7	5.7	1467.7	-5719.7	433.1	-1072.8	-5203.9	257.2
89	ok	0.09	0.6	1.45e-02	5.7	5.7	5.7	5.7	1620.5	-5715.7	1787.4	-1083.5	-5267.9	-39.2
97	ok	0.09	0.6	1.43e-02	5.7	5.7	5.7	5.7	1649.8	-5736.7	1951.3	-1079.9	-5264.0	-327.9
105	ok	0.09	0.6	1.41e-02	5.7	5.7	5.7	5.7	1655.2	-5750.9	2101.5	-1060.3	-5184.7	-625.1
113	ok	0.09	0.6	1.38e-02	5.7	5.7	5.7	5.7	1604.2	-5751.2	2238.0	-1018.2	-5013.2	-926.2
121	ok	0.09	0.6	1.37e-02	5.7	5.7	5.7	5.7	1437.2	-5716.9	2347.8	-934.6	-4714.1	-1223.7
129	ok	0.09	0.6	1.36e-02	5.7	5.7	5.7	5.7	1058.0	-5601.3	2377.8	-762.7	-4208.3	-1502.4
137	ok	0.09	0.5	1.30e-02	5.7	5.7	5.7	5.7	4010.6	-4431.9	1057.6	-542.1	-3340.0	-1599.3
145	ok	0.09	0.4	1.07e-02	5.7	5.7	5.7	5.7	-1899.9	-5034.8	80.8	631.2	-1884.7	-1592.5
165	ok	0.09	0.2	4.46e-03	5.7	5.7	5.7	5.7	119.2	-608.6	1472.5	-267.8	-483.2	-970.1
173	ok	0.09	0.2	8.74e-03	5.7	5.7	5.7	5.7	551.6	-344.7	696.3	-160.6	-677.6	-977.1
181	ok	0.09	0.2	1.28e-02	5.7	5.7	5.7	5.7	20.1	-504.8	279.8	-125.6	-1011.0	-922.7
189	ok	0.09	0.2	1.67e-02	5.7	5.7	5.7	5.7	-641.4	-663.9	-68.5	-129.9	-1332.8	-817.8
197	ok	0.09	0.2	1.91e-02	5.7	5.7	5.7	5.7	-1185.9	-775.8	-357.5	-155.9	-1607.6	-688.6
205	ok	0.09	0.2	2.07e-02	5.7	5.7	5.7	5.7	-1568.5	-848.2	-601.4	-187.6	-1826.1	-549.4
213	ok	0.09	0.2	2.17e-02	5.7	5.7	5.7	5.7	-1792.6	-893.6	-809.0	-216.4	-1989.4	-407.4
221	ok	0.09	0.2	2.21e-02	5.7	5.7	5.7	5.7	-1870.5	-920.9	-988.3	-237.8	-2101.9	-265.6
229	ok	0.09	0.3	2.19e-02	5.7	5.7	5.7	5.7	2962.7	-974.2	-1725.9	-350.7	-1945.1	-255.2
237	ok	0.09	0.3	2.13e-02	5.7	5.7	5.7	5.7	2955.8	-983.3	-1970.8	-350.4	-2005.0	-193.0
245	ok	0.09	0.3	2.03e-02	5.7	5.7	5.7	5.7	-1372.7	-928.8	-1304.1	-243.1	-2171.6	192.4
253	ok	0.09	0.3	1.92e-02	5.7	5.7	5.7	5.7	-1094.2	-924.7	-1487.4	-221.5	-2111.1	343.9
261	ok	0.09	0.3	1.83e-02	5.7	5.7	5.7	5.7	-878.0	-925.8	-1691.0	-183.2	-2008.6	

Viale Duca Alessandro n. 11 – 43123 Parma
Cell. 335 1403156 – E mail ing.concari@gmail.com
Sito web: studioaire.it – P.IVA 02561480340

502.8														
269	ok	0.09	0.3	1.73e-02	5.7	5.7	5.7	5.7	3023.8	-1090.0	-1967.8	-264.5	-1971.8	
504.5														
277	ok	0.09	0.3	1.67e-02	5.7	5.7	5.7	5.7	2299.6	-1180.0	-1714.9	-220.1	-1898.8	
668.2														
285	ok	0.09	0.3	1.60e-02	5.7	5.7	5.7	5.7	1825.5	-1268.2	-2472.8	-148.7	-1768.6	
815.8														
293	ok	0.09	0.3	1.34e-02	5.7	5.7	5.7	5.7	-6752.3	-3095.8	-1834.4	534.8	-1280.0	
1216.3														
307	ok	0.09	0.2	9.39e-03	5.7	5.7	5.7	5.7	-3298.9	-3114.5	-1149.9	-1581.6	-66.1	-
1100.7														
315	ok	0.09	0.4	1.22e-02	5.7	5.7	5.7	5.7	-4772.1	-4258.6	99.5	-3274.9	-310.0	-
1064.1														
323	ok	0.09	0.5	1.39e-02	5.7	5.7	5.7	5.7	-5640.7	-5430.9	543.5	-4368.9	-571.3	-
808.6														
331	ok	0.09	0.5	1.56e-02	5.7	5.7	5.7	5.7	-6039.7	-6193.1	1082.4	-4952.0	-728.6	-
453.5														
339	ok	0.09	0.5	1.73e-02	5.7	5.7	5.7	5.7	-6184.8	-6581.7	1648.9	-5158.3	-797.9	-
57.0														
347	ok	0.09	0.5	1.84e-02	5.7	5.7	5.7	5.7	-6198.0	-6809.7	939.3	-5060.5	-801.1	
352.0														
355	ok	0.09	0.5	1.87e-02	5.7	5.7	5.7	5.7	-6043.6	-6481.8	1370.3	-4699.8	-758.8	
680.6														
363	ok	0.09	0.4	1.82e-02	5.7	5.7	5.7	5.7	-5705.1	-5775.9	1627.5	-4087.0	-676.1	
919.0														
371	ok	0.09	0.3	1.64e-02	5.7	5.7	5.7	5.7	-5069.5	-4687.4	1626.2	-3225.3	-555.7	
1040.5														
379	ok	0.09	0.3	1.31e-02	5.7	5.7	5.7	5.7	-3673.4	-3479.3	1050.2	-2088.9	-334.9	
1141.7														
387	ok	0.09	0.1	8.33e-03	5.7	5.7	5.7	5.7	-2194.0	-1867.6	1738.2	-820.9	-36.4	
964.5														
395	ok	0.09	0.5	9.07e-03	5.7	5.7	5.7	5.7	-1568.4	-3875.9	1248.0	-1218.4	-2740.6	
1178.1														
403	ok	0.09	0.6	1.96e-02	5.7	5.7	5.7	5.7	-652.8	-2586.9	3131.0	-2773.2	-1418.3	
1496.3														
407	ok	0.09	0.1	3.45e-03	5.7	5.7	5.7	5.7	1199.4	344.1	301.5	466.1	-33.7	
262.4														
408	ok	0.09	0.2	4.68e-03	5.7	5.7	5.7	5.7	2834.3	326.1	-640.0	114.4	-7.9	
441.9														
409	ok	0.09	0.2	6.04e-03	5.7	5.7	5.7	5.7	2967.7	284.3	-648.8	-19.3	4.6	
489.0														
410	ok	0.09	0.3	7.26e-03	5.7	5.7	5.7	5.7	2877.4	267.7	-639.3	-94.2	15.1	
485.8														
411	ok	0.09	0.9	1.82e-02	5.7	5.7	5.7	5.7	-201.0	6049.9	-1922.7	493.8	5240.2	
994.6														
415	ok	0.09	0.3	8.22e-03	5.7	5.7	5.7	5.7	2750.4	260.3	-630.6	-145.6	23.5	
447.2														
416	ok	0.09	0.3	8.78e-03	5.7	5.7	5.7	5.7	2647.6	256.5	-623.8	-183.4	29.4	
382.8														
417	ok	0.09	0.3	8.98e-03	5.7	5.7	5.7	5.7	2587.5	254.0	-618.3	-210.5	33.5	
300.0														
418	ok	0.09	0.3	9.29e-03	5.7	5.7	5.7	5.7	2573.0	252.3	-613.7	-229.1	36.1	
204.3														
419	ok	0.09	0.6	1.56e-02	5.7	5.7	5.7	5.7	-361.9	-1074.7	-2379.0	220.8	4504.8	
972.6														
423	ok	0.09	0.3	9.35e-03	5.7	5.7	5.7	5.7	2600.0	251.1	-609.6	-241.5	37.9	99.9
424	ok	0.09	0.3	8.98e-03	5.7	5.7	5.7	5.7	2247.7	161.0	286.4	-248.6	38.9	-
53.9														
425	ok	0.09	0.3	8.76e-03	5.7	5.7	5.7	5.7	2319.3	161.4	285.3	-252.6	39.9	-
168.5														
426	ok	0.09	0.3	8.71e-03	5.7	5.7	5.7	5.7	2373.7	163.4	283.3	-251.3	40.9	-
284.5														
427	ok	0.09	0.4	1.66e-02	5.7	5.7	5.7	5.7	-88.5	-6892.6	285.1	-337.8	3075.1	
766.4														
435	ok	0.09	0.5	2.39e-02	5.7	5.7	5.7	5.7	-1155.3	-3958.6	-3346.9	-3712.8	-1800.9	-
48.0														
443	ok	0.09	0.3	1.61e-02	5.7	5.7	5.7	5.7	-1682.2	-5249.1	842.2	-2026.0	319.9	-
720.2														
447	ok	0.09	0.3	8.28e-03	5.7	5.7	5.7	5.7	2358.8	168.0	280.2	-237.9	42.1	-
399.0														
448	ok	0.09	0.3	7.79e-03	5.7	5.7	5.7	5.7	2191.7	176.5	276.1	-191.1	44.2	-
504.9														
449	ok	0.09	0.3	7.29e-03	5.7	5.7	5.7	5.7	1745.5	190.7	269.5	-55.7	46.6	-
583.8														
450	ok	0.09	0.3	6.88e-03	5.7	5.7	5.7	5.7	834.6	215.3	251.6	285.1	40.5	-
587.7														
451	ok	0.09	0.2	1.69e-02	5.7	5.7	5.7	5.7	171.0	-6873.9	-345.3	-408.6	1028.6	-
1122.1														
455	ok	0.09	0.3	6.55e-03	5.7	5.7	5.7	5.7	-123.3	76.8	-1701.1	1525.3	378.6	-
415.3														
456	ok	0.09	0.3	5.70e-03	5.7	5.7	5.7	5.7	-113.5	1922.8	-625.0	1607.3	303.2	-
455.5														
457	ok	0.09	0.1	2.01e-03	5.7	5.7	5.7	5.7	-377.1	964.6	274.4	32.2	118.0	-
54.8														
458	ok	0.09	3.72e-02	9.92e-04	5.7	5.7	5.7	5.7	18.1	474.6	-483.7	1.5	1.5	24.2
459	ok	0.09	0.3	2.26e-02	5.7	5.7	5.7	5.7	943.9	-1.357e+04	-977.5	-724.6	-2958.1	-
1172.4														
467	ok	0.09	0.8	3.38e-02	5.7	5.7	5.7	5.7	1676.3	-8102.7	-6790.3	-2752.5	-5638.4	-
1488.7														
475	ok	0.09	0.5	1.37e-02	5.7	5.7	5.7	5.7	-1632.6	-4022.9	-5295.2	-919.0	-3911.0	-
1872.5														
476	ok	0.09	0.3	9.36e-03	5.7	5.7	5.7	5.7	-3932.5	-1020.7	-200.2	-419.2	268.3	-
2474.3														
477	ok	0.09	0.3	1.28e-02	5.7	5.7	5.7	5.7	-5010.5	-881.0	2284.9	-1344.8	652.1	-
1505.8														
478	ok	0.09	0.2	1.50e-02	5.7	5.7	5.7	5.7	-5582.3	-3507.8	448.9	-1670.9	499.1	-
1268.2														
479	ok	0.09	0.2	1.64e-02	5.7	5.7	5.7	5.7	-6057.0	-4245.4	665.2	-2045.7	443.2	-

Viale Duca Alessandro n. 11 – 43123 Parma
Cell. 335 1403156 – E mail ing.concari@gmail.com
Sito web: studioaire.it – P.IVA 02561480340

692.7														
480	ok	0.09	0.2	1.70e-02	5.7	5.7	5.7	5.7	-6214.8	-4707.3	906.4	-2248.7	370.3	-
104.7														
481	ok	0.09	0.2	1.72e-02	5.7	5.7	5.7	5.7	-3937.2	672.7	1449.0	-2287.5	-250.5	
501.5														
482	ok	0.09	0.2	1.69e-02	5.7	5.7	5.7	5.7	-5864.8	-4788.2	1237.5	-2167.6	184.3	
934.6														
483	ok	0.09	0.2	1.58e-02	5.7	5.7	5.7	5.7	-5332.8	-4452.9	1204.7	-1905.1	68.0	
1317.9														
484	ok	0.09	0.2	1.38e-02	5.7	5.7	5.7	5.7	-4356.8	-3470.6	725.5	-1518.7	-70.4	
1566.9														
485	ok	0.09	0.2	1.08e-02	5.7	5.7	5.7	5.7	-3034.6	-2934.4	355.8	-1035.4	-220.5	
1644.2														
486	ok	0.09	0.2	8.25e-03	5.7	5.7	5.7	5.7	-1290.1	-2507.2	-12.7	-532.1	-393.0	
1476.1														
487	ok	0.09	0.4	1.06e-02	5.7	5.7	5.7	5.7	-5884.8	-799.7	1702.2	415.5	1342.3	-
1985.5														
488	ok	0.09	0.3	1.28e-02	5.7	5.7	5.7	5.7	-6223.5	-152.9	1617.0	513.2	1675.7	-
1722.5														
489	ok	0.09	0.3	1.45e-02	5.7	5.7	5.7	5.7	-4644.2	-2241.5	483.7	89.8	1527.1	-
1584.0														
490	ok	0.09	0.2	1.53e-02	5.7	5.7	5.7	5.7	-5765.7	-2801.3	773.4	-160.5	1571.4	-
856.7														
491	ok	0.09	0.2	1.54e-02	5.7	5.7	5.7	5.7	-5923.0	-3264.7	787.0	-282.1	1502.4	-
183.1														
492	ok	0.09	0.2	1.47e-02	5.7	5.7	5.7	5.7	-5804.9	-3547.8	773.5	-370.2	1342.9	
459.8														
493	ok	0.09	0.3	1.37e-02	5.7	5.7	5.7	5.7	-5427.7	-3667.3	695.1	-415.4	1105.2	
1029.8														
494	ok	0.09	0.2	1.23e-02	5.7	5.7	5.7	5.7	-4763.9	-3669.6	522.9	-419.0	791.8	
1490.1														
495	ok	0.09	0.2	1.02e-02	5.7	5.7	5.7	5.7	-1239.0	-1743.0	2963.5	-837.1	-538.8	
1403.4														
496	ok	0.09	0.2	9.70e-03	5.7	5.7	5.7	5.7	346.8	-2156.8	2142.9	-738.0	-747.9	
1283.1														
497	ok	0.09	0.3	8.75e-03	5.7	5.7	5.7	5.7	-972.6	-3363.5	-236.1	-370.7	-781.3	
1725.3														
498	ok	0.09	0.4	1.20e-02	5.7	5.7	5.7	5.7	-6172.6	-216.0	2320.9	735.5	1778.9	-
1926.6														
499	ok	0.09	0.4	1.33e-02	5.7	5.7	5.7	5.7	-6843.0	-1179.4	2301.0	1178.2	2591.5	-
1507.7														
500	ok	0.09	0.4	1.41e-02	5.7	5.7	5.7	5.7	-4574.1	-1562.3	1055.4	1052.6	2397.7	-
1590.6														
501	ok	0.09	0.4	1.43e-02	5.7	5.7	5.7	5.7	-4984.5	-1590.0	568.7	1155.5	2618.0	-
982.5														
502	ok	0.09	0.4	1.41e-02	5.7	5.7	5.7	5.7	-5165.3	-1989.3	443.7	1153.6	2611.3	-
314.8														
503	ok	0.09	0.4	1.31e-02	5.7	5.7	5.7	5.7	-5170.0	-2740.4	668.0	1076.7	2438.6	
346.6														
504	ok	0.09	0.3	1.19e-02	5.7	5.7	5.7	5.7	-4826.4	-2983.6	512.3	942.5	2117.4	
947.1														
505	ok	0.09	0.3	1.03e-02	5.7	5.7	5.7	5.7	-4222.5	-3187.3	330.9	756.0	1652.6	
1447.1														
506	ok	0.09	0.3	1.00e-02	5.7	5.7	5.7	5.7	-3348.5	-3400.5	141.1	514.2	1027.3	
1800.3														
507	ok	0.09	0.3	9.94e-03	5.7	5.7	5.7	5.7	1349.9	-2574.9	1673.7	-518.9	-931.1	
1351.1														
508	ok	0.09	0.3	9.72e-03	5.7	5.7	5.7	5.7	3508.6	-2257.5	1418.9	-605.8	-1612.5	
1169.2														
509	ok	0.09	0.4	1.35e-02	5.7	5.7	5.7	5.7	-7416.5	-900.2	1882.6	954.5	2091.9	-
1662.5														
510	ok	0.09	0.5	1.36e-02	5.7	5.7	5.7	5.7	-6976.7	-1143.8	2893.7	1528.7	3201.1	-
1392.1														
511	ok	0.09	0.5	1.37e-02	5.7	5.7	5.7	5.7	-6416.4	-358.4	2720.1	1836.4	3634.1	-
756.8														
512	ok	0.09	0.5	1.34e-02	5.7	5.7	5.7	5.7	-4489.3	-1165.9	525.8	1846.4	3486.9	-
922.1														
513	ok	0.09	0.5	1.27e-02	5.7	5.7	5.7	5.7	-4665.3	-1513.2	362.1	1920.7	3524.8	-
315.7														
514	ok	0.09	0.4	1.16e-02	5.7	5.7	5.7	5.7	-4663.1	-2279.3	538.7	1853.7	3318.1	
295.1														
515	ok	0.09	0.4	1.05e-02	5.7	5.7	5.7	5.7	-4311.7	-2611.6	357.0	1664.4	2896.7	
853.3														
516	ok	0.09	0.3	9.44e-03	5.7	5.7	5.7	5.7	-3710.0	-2957.8	182.0	1364.4	2267.5	
1316.8														
517	ok	0.09	0.3	9.74e-03	5.7	5.7	5.7	5.7	-2868.7	-3345.6	38.8	962.1	1409.9	
1639.6														
518	ok	0.09	0.3	9.89e-03	5.7	5.7	5.7	5.7	1292.4	-3037.6	2550.8	-371.8	-1078.6	
1303.4														
519	ok	0.09	0.3	1.06e-02	5.7	5.7	5.7	5.7	4425.7	-2622.8	1227.1	-572.0	-1997.7	
1185.0														
520	ok	0.09	0.4	1.48e-02	5.7	5.7	5.7	5.7	-8506.3	-1047.4	1456.7	1047.1	2298.1	-
1326.2														
521	ok	0.09	0.1	3.33e-03	5.7	5.7	5.7	5.7	733.9	-38.5	-606.0	512.9	-181.7	
233.8														
522	ok	0.09	0.5	1.38e-02	5.7	5.7	5.7	5.7	-7508.2	-1274.1	2349.9	1720.3	3658.1	-
1137.3														
523	ok	0.09	0.6	1.33e-02	5.7	5.7	5.7	5.7	-6566.5	-411.6	2217.4	2117.1	4228.9	-
633.9														
524	ok	0.09	0.6	1.26e-02	5.7	5.7	5.7	5.7	-3997.0	-1016.4	404.2	2252.7	4204.8	-
803.8														
525	ok	0.09	0.6	1.15e-02	5.7	5.7	5.7	5.7	-4153.5	-1315.9	262.9	2380.1	4291.1	-
286.6														
526	ok	0.09	0.5	1.02e-02	5.7	5.7	5.7	5.7	-4148.7	-2079.8	454.0	2325.4	4061.6	
240.9														
527	ok	0.09	0.4	9.21e-03	5.7	5.7	5.7	5.7	-3808.2	-2458.5	295.3	2105.9	3555.2	
725.3														
528	ok	0.09	0.4	8.82e-03	5.7	5.7	5.7	5.7	-3236.4	-2884.2	160.3	1737.5	2782.0	

Viale Duca Alessandro n. 11 – 43123 Parma
Cell. 335 1403156 – E mail ing.concari@gmail.com
Sito web: studioaire.it – P.IVA 02561480340

529	ok	0.09	0.3	9.37e-03	5.7	5.7	5.7	5.7	-2454.6	-3368.6	76.3	1237.3	1723.0	1126.8
530	ok	0.09	0.3	9.79e-03	5.7	5.7	5.7	5.7	2049.8	-3285.4	2425.1	-241.9	-1182.2	1404.7
531	ok	0.09	0.4	1.14e-02	5.7	5.7	5.7	5.7	4238.6	-3032.6	2151.3	-570.7	-2302.0	1216.0
532	ok	0.09	0.4	1.61e-02	5.7	5.7	5.7	5.7	-9362.5	-1156.9	1078.5	1075.7	2430.5	1094.9
533	ok	0.09	0.5	1.41e-02	5.7	5.7	5.7	5.7	-7947.9	-1405.8	1799.3	1790.2	3981.3	-988.7
534	ok	0.09	0.6	1.29e-02	5.7	5.7	5.7	5.7	-3892.3	-914.3	269.4	2097.7	4281.9	-623.2
535	ok	0.09	0.7	1.17e-02	5.7	5.7	5.7	5.7	-3552.8	-1019.9	230.3	2483.1	4774.8	-1012.4
536	ok	0.09	0.6	1.05e-02	5.7	5.7	5.7	5.7	-3677.7	-1288.1	146.2	2645.6	4906.4	-651.9
537	ok	0.09	0.6	9.04e-03	5.7	5.7	5.7	5.7	-3669.7	-2042.7	388.4	2602.0	4662.0	236.6
538	ok	0.09	0.5	8.20e-03	5.7	5.7	5.7	5.7	-3348.1	-2440.8	282.6	2367.6	4086.9	190.3
539	ok	0.09	0.4	8.34e-03	5.7	5.7	5.7	5.7	-2818.2	-2903.5	206.1	1960.6	3195.1	583.5
540	ok	0.09	0.3	9.04e-03	5.7	5.7	5.7	5.7	-2105.2	-3432.3	185.6	1403.1	1972.1	909.1
541	ok	0.09	0.2	1.00e-02	5.7	5.7	5.7	5.7	2655.8	-3467.0	2324.0	-130.9	-1250.2	1134.1
542	ok	0.09	0.4	1.19e-02	5.7	5.7	5.7	5.7	4930.6	-3172.0	2088.3	-545.5	-2523.7	1072.8
543	ok	0.09	0.4	1.71e-02	5.7	5.7	5.7	5.7	-9579.8	-1156.6	-1562.3	950.4	2398.4	985.4
544	ok	0.09	0.6	1.42e-02	5.7	5.7	5.7	5.7	-8133.3	-1500.3	1613.4	1793.6	4205.0	-905.6
545	ok	0.09	0.7	1.24e-02	5.7	5.7	5.7	5.7	-3599.1	-1044.8	-56.2	2205.7	4647.8	-442.4
546	ok	0.09	0.7	1.09e-02	5.7	5.7	5.7	5.7	-3727.5	-1260.7	46.5	2595.1	5274.2	-758.0
547	ok	0.09	0.7	9.43e-03	5.7	5.7	5.7	5.7	-3263.8	-1352.7	19.0	2795.3	5373.8	-473.9
548	ok	0.09	0.6	8.04e-03	5.7	5.7	5.7	5.7	-3250.3	-2098.8	329.8	2760.7	5119.7	172.9
549	ok	0.09	0.5	7.59e-03	5.7	5.7	5.7	5.7	-2948.8	-2501.6	291.3	2520.2	4492.0	145.6
550	ok	0.09	0.4	8.00e-03	5.7	5.7	5.7	5.7	-2462.8	-2975.4	281.2	2092.7	3508.8	439.1
551	ok	0.09	0.3	9.08e-03	5.7	5.7	5.7	5.7	-1816.4	-3516.0	323.6	1502.6	2160.7	681.7
552	ok	0.09	0.2	1.05e-02	5.7	5.7	5.7	5.7	3114.2	-3600.5	2222.2	-37.9	-1292.9	849.0
553	ok	0.09	0.4	1.23e-02	5.7	5.7	5.7	5.7	5445.8	-3263.8	2015.2	-519.6	-2681.8	895.6
554	ok	0.09	0.4	1.76e-02	5.7	5.7	5.7	5.7	-9831.6	-1215.5	-367.0	975.2	2503.1	834.4
555	ok	0.09	0.6	1.42e-02	5.7	5.7	5.7	5.7	-7940.9	-1509.2	-1282.2	1633.6	4234.9	-668.3
556	ok	0.09	0.7	1.20e-02	5.7	5.7	5.7	5.7	-3355.0	-1173.1	-366.4	2269.7	4906.0	-518.5
557	ok	0.09	0.7	1.01e-02	5.7	5.7	5.7	5.7	-3403.6	-1404.9	-207.3	2681.8	5595.1	-493.3
558	ok	0.09	0.7	8.38e-03	5.7	5.7	5.7	5.7	-2920.4	-1463.2	-109.1	2880.4	5699.1	-302.8
559	ok	0.09	0.6	7.23e-03	5.7	5.7	5.7	5.7	-2899.9	-2205.0	274.0	2852.8	5438.3	100.2
560	ok	0.09	0.6	7.40e-03	5.7	5.7	5.7	5.7	-2616.9	-2605.9	306.0	2610.7	4773.3	107.1
561	ok	0.09	0.4	8.25e-03	5.7	5.7	5.7	5.7	-2171.0	-3075.7	362.7	2172.9	3725.7	297.1
562	ok	0.09	0.3	9.42e-03	5.7	5.7	5.7	5.7	-1583.3	-3609.0	464.7	1564.5	2290.6	453.0
563	ok	0.09	0.2	1.08e-02	5.7	5.7	5.7	5.7	3678.8	-3644.7	1032.9	99.1	-1324.2	559.5
564	ok	0.09	0.4	1.26e-02	5.7	5.7	5.7	5.7	5790.2	-3329.4	1929.5	-492.3	-2790.5	658.1
565	ok	0.09	0.4	1.76e-02	5.7	5.7	5.7	5.7	-9877.0	-1242.7	-1914.2	1016.7	2604.4	648.4
566	ok	0.09	0.6	1.43e-02	5.7	5.7	5.7	5.7	-7859.3	-1584.7	-1558.4	1702.8	4435.9	-381.9
567	ok	0.09	0.7	1.17e-02	5.7	5.7	5.7	5.7	-3148.4	-1290.3	-644.3	2313.0	5064.6	-301.8
568	ok	0.09	0.8	9.38e-03	5.7	5.7	5.7	5.7	-3139.9	-1551.9	-439.5	2739.4	5791.0	-222.8
569	ok	0.09	0.7	7.39e-03	5.7	5.7	5.7	5.7	-3031.9	-1863.8	-278.1	2926.4	5931.4	-124.1
570	ok	0.09	0.7	6.75e-03	5.7	5.7	5.7	5.7	-2617.7	-2339.9	221.0	2909.3	5621.4	13.7
571	ok	0.09	0.6	7.47e-03	5.7	5.7	5.7	5.7	-2350.6	-2736.0	318.3	2667.8	4933.2	74.0
572	ok	0.09	0.4	8.50e-03	5.7	5.7	5.7	5.7	-1939.8	-3193.3	436.9	2225.3	3847.3	158.8
573	ok	0.09	0.3	9.71e-03	5.7	5.7	5.7	5.7	-1401.1	-3707.5	593.9	1606.6	2361.7	225.6
574	ok	0.09	0.2	1.11e-02	5.7	5.7	5.7	5.7	3769.9	-3744.6	913.8	172.2	-1340.4	268.3
575	ok	0.09	0.3	1.31e-02	5.7	5.7	5.7	5.7	5781.8	-3400.5	2093.3	-463.7	-2891.5	420.7
576	ok	0.09	0.3	1.74e-02	5.7	5.7	5.7	5.7	-1.003e+04	-1329.4	-842.1	1035.1	2661.4	413.1
577	ok	0.09	0.6	1.42e-02	5.7	5.7	5.7	5.7	-7632.5	-1650.0	-1917.0	1754.1	4528.9	-134.3
														-58.3

Viale Duca Alessandro n. 11 – 43123 Parma
Cell. 335 1403156 – E mail ing.concari@gmail.com
Sito web: studioaire.it – P.IVA 02561480340

578	ok	0.09	0.7	1.18e-02	5.7	5.7	5.7	5.7	-6356.2	-1288.1	434.8	2143.9	5327.6	221.1
579	ok	0.09	0.8	9.77e-03	5.7	5.7	5.7	5.7	-2924.3	-1702.7	-639.2	2781.0	5865.6	60.3
580	ok	0.09	0.7	8.04e-03	5.7	5.7	5.7	5.7	-2792.3	-2040.2	-430.3	2975.0	6007.6	64.4
581	ok	0.09	0.7	6.66e-03	5.7	5.7	5.7	5.7	-2395.1	-2498.9	171.7	2945.0	5670.8	45.3
582	ok	0.09	0.6	7.65e-03	5.7	5.7	5.7	5.7	-2142.5	-2888.6	323.5	2705.5	4972.1	23.5
583	ok	0.09	0.4	8.74e-03	5.7	5.7	5.7	5.7	-1420.9	-3265.3	92.0	2261.7	3873.1	-1.6
584	ok	0.09	0.2	9.94e-03	5.7	5.7	5.7	5.7	-924.1	-3751.9	293.5	1637.8	2372.5	-25.8
585	ok	0.09	0.2	1.13e-02	5.7	5.7	5.7	5.7	3711.0	-3815.7	385.1	239.7	-1334.1	206.3
586	ok	0.09	0.3	1.33e-02	5.7	5.7	5.7	5.7	5944.5	-3362.3	-460.5	-457.3	-2969.1	-145.4
587	ok	0.09	0.3	1.68e-02	5.7	5.7	5.7	5.7	-9794.4	-1308.0	453.7	1004.9	2630.5	456.4
588	ok	0.09	0.6	1.40e-02	5.7	5.7	5.7	5.7	-7252.2	-1715.1	-2243.2	1803.7	4584.2	204.1
589	ok	0.09	0.7	1.18e-02	5.7	5.7	5.7	5.7	-5483.4	-1371.8	-2428.3	2287.2	5479.0	190.7
590	ok	0.09	0.8	1.01e-02	5.7	5.7	5.7	5.7	-2339.1	-1779.2	-1284.1	2807.2	5819.7	248.5
591	ok	0.09	0.7	8.70e-03	5.7	5.7	5.7	5.7	-2196.5	-2149.1	-1045.8	3004.1	5949.9	146.8
592	ok	0.09	0.7	7.47e-03	5.7	5.7	5.7	5.7	-2053.0	-3045.5	-404.4	2967.3	5583.5	32.0
593	ok	0.09	0.6	7.88e-03	5.7	5.7	5.7	5.7	-1636.0	-3008.3	-81.9	2725.7	4888.1	-110.0
594	ok	0.09	0.4	9.01e-03	5.7	5.7	5.7	5.7	-1289.8	-3421.7	129.9	2284.9	3799.3	-229.3
595	ok	0.09	0.3	1.01e-02	5.7	5.7	5.7	5.7	-831.4	-3871.2	372.8	1661.0	2318.8	-324.0
596	ok	0.09	0.2	1.16e-02	5.7	5.7	5.7	5.7	3396.5	-3851.3	655.5	159.3	-1478.7	-348.1
597	ok	0.09	0.4	1.34e-02	5.7	5.7	5.7	5.7	5722.4	-3381.2	-606.8	-463.4	-3023.4	-389.7
598	ok	0.09	0.4	1.63e-02	5.7	5.7	5.7	5.7	-8651.6	-1318.3	-2380.2	1100.2	2745.8	481.4
599	ok	0.09	0.6	1.35e-02	5.7	5.7	5.7	5.7	-6707.8	-1801.1	-2524.9	1839.7	4584.5	481.8
600	ok	0.09	0.7	1.17e-02	5.7	5.7	5.7	5.7	-5000.4	-1513.2	-2731.4	2329.5	5451.3	418.9
601	ok	0.09	0.8	1.03e-02	5.7	5.7	5.7	5.7	-2172.5	-1992.8	-1391.1	2803.2	5652.0	439.7
602	ok	0.09	0.7	9.33e-03	5.7	5.7	5.7	5.7	-2020.0	-2395.9	-1146.4	2997.5	5756.3	234.7
603	ok	0.09	0.6	8.37e-03	5.7	5.7	5.7	5.7	-1793.6	-2796.1	-902.7	2965.4	5377.9	8.9
604	ok	0.09	0.5	8.21e-03	5.7	5.7	5.7	5.7	-1504.8	-3237.1	-102.0	2715.1	4675.3	-240.0
605	ok	0.09	0.4	9.33e-03	5.7	5.7	5.7	5.7	-1193.2	-3616.1	134.7	2284.6	3619.5	-457.3
606	ok	0.09	0.3	1.04e-02	5.7	5.7	5.7	5.7	-776.5	-4016.6	409.9	1670.3	2194.5	-627.4
607	ok	0.09	0.2	1.17e-02	5.7	5.7	5.7	5.7	3217.6	-3873.5	356.7	151.2	-1548.7	-603.0
608	ok	0.09	0.4	1.36e-02	5.7	5.7	5.7	5.7	5319.9	-3400.1	-778.5	-463.9	-3055.1	-637.3
609	ok	0.09	0.4	1.54e-02	5.7	5.7	5.7	5.7	-7919.4	-1385.0	-2457.3	1124.6	2757.2	801.2
610	ok	0.09	0.6	1.27e-02	5.7	5.7	5.7	5.7	-5980.1	-1923.4	-2769.1	1845.0	4521.0	765.2
611	ok	0.09	0.7	1.15e-02	5.7	5.7	5.7	5.7	-4373.4	-1707.9	-2989.5	2321.3	5339.9	651.4
612	ok	0.09	0.7	1.06e-02	5.7	5.7	5.7	5.7	-3300.8	-2139.2	-3214.2	2623.5	5646.8	496.2
613	ok	0.09	0.7	9.91e-03	5.7	5.7	5.7	5.7	-1840.5	-2718.4	-1224.5	2921.9	5425.2	327.1
614	ok	0.09	0.6	9.25e-03	5.7	5.7	5.7	5.7	-1723.3	-3617.9	-580.9	2897.0	5026.7	-8.7
615	ok	0.09	0.5	8.74e-03	5.7	5.7	5.7	5.7	-1384.6	-3535.6	-147.4	2645.6	4325.8	-363.6
616	ok	0.09	0.4	9.70e-03	5.7	5.7	5.7	5.7	-1117.0	-3869.3	95.2	2237.5	3324.8	-680.4
617	ok	0.09	0.3	1.07e-02	5.7	5.7	5.7	5.7	-753.0	-4206.0	390.1	1651.9	1989.2	-930.6
618	ok	0.09	0.2	1.19e-02	5.7	5.7	5.7	5.7	2532.1	-4115.0	16.6	407.9	-1533.8	-766.7
619	ok	0.09	0.4	1.37e-02	5.7	5.7	5.7	5.7	4712.9	-3430.1	-988.0	-450.7	-3062.9	-891.8
620	ok	0.09	0.4	1.42e-02	5.7	5.7	5.7	5.7	-8122.6	-1679.3	-1297.6	1145.7	2734.6	1087.4
621	ok	0.09	0.6	1.19e-02	5.7	5.7	5.7	5.7	-6168.2	-2280.7	-1826.0	1822.1	4387.4	996.8
622	ok	0.09	0.7	1.12e-02	5.7	5.7	5.7	5.7	-4527.8	-2114.5	-2078.7	2249.1	5152.6	831.6
623	ok	0.09	0.7	1.08e-02	5.7	5.7	5.7	5.7	-2744.1	-2408.6	-3577.2	2488.6	5387.6	664.5
624	ok	0.09	0.6	1.04e-02	5.7	5.7	5.7	5.7	-1633.8	-3144.2	-1286.2	2722.0	4958.7	426.8
625	ok	0.09	0.5	1.01e-02	5.7	5.7	5.7	5.7	-1542.7	-4040.9	-676.0	2711.5	4519.3	-12.1
626	ok	0.09	0.4	9.57e-03	5.7	5.7	5.7	5.7	-1252.4	-3932.4	-226.0	2468.7	3830.1	-475.9
627	ok	0.09	0.4	1.03e-02	5.7	5.7	5.7	5.7	-1043.2	-4209.8	-2.8	2098.9	2907.5	-886.2
628	ok	0.09	0.3	1.11e-02	5.7	5.7	5.7	5.7	-750.9	-4464.5	294.9	1578.0	1688.5	-1214.5
629	ok	0.09	0.3	1.22e-02	5.7	5.7	5.7	5.7	1869.0	-4302.1	-344.9	472.7	-1642.1	-1097.0
630	ok	0.09	0.4	1.38e-02	5.7	5.7	5.7	5.7	4404.0	-3438.9	-186.1	-423.8	-3054.9	-1142.4

Viale Duca Alessandro n. 11 – 43123 Parma
Cell. 335 1403156 – E mail ing.concari@gmail.com
Sito web: studioaire.it – P.IVA 02561480340

631	ok	0.09	0.4	1.27e-02	5.7	5.7	5.7	5.7	-7077.7	-1897.8	-1726.3	1149.5	2520.0	1434.5
632	ok	0.09	0.6	1.09e-02	5.7	5.7	5.7	5.7	-5174.5	-2431.5	-2078.3	1722.9	4176.9	1227.5
633	ok	0.09	0.7	1.09e-02	5.7	5.7	5.7	5.7	-3686.1	-1918.0	-2347.7	2040.8	4905.5	982.1
634	ok	0.09	0.7	1.10e-02	5.7	5.7	5.7	5.7	-2808.7	-2394.2	-2942.9	2247.3	5087.6	787.5
635	ok	0.09	0.6	1.11e-02	5.7	5.7	5.7	5.7	-1781.6	-3789.7	-876.8	2309.2	4375.1	550.5
636	ok	0.09	0.4	1.07e-02	5.7	5.7	5.7	5.7	-1236.6	-4078.2	-1185.9	2337.5	3837.4	16.1
637	ok	0.09	0.4	1.08e-02	5.7	5.7	5.7	5.7	-1081.6	-4461.0	-338.6	2109.0	3176.6	-579.1
638	ok	0.09	0.4	1.13e-02	5.7	5.7	5.7	5.7	-1280.8	-4737.2	218.4	1776.8	2389.0	-1053.0
639	ok	0.09	0.3	1.18e-02	5.7	5.7	5.7	5.7	-754.4	-4837.5	98.8	1392.6	1275.9	-1430.3
640	ok	0.09	0.3	1.24e-02	5.7	5.7	5.7	5.7	1136.1	-4661.7	-816.5	550.7	-1841.6	-1425.6
641	ok	0.09	0.4	1.37e-02	5.7	5.7	5.7	5.7	3504.4	-3726.3	-609.5	-349.8	-3052.6	-1407.0
642	ok	0.09	0.4	1.07e-02	5.7	5.7	5.7	5.7	-4352.6	-1273.1	-2901.1	1103.6	2473.8	1244.9
643	ok	0.09	0.5	9.81e-03	5.7	5.7	5.7	5.7	-3936.4	-2027.9	-2404.2	1472.3	3894.1	1277.9
644	ok	0.09	0.6	1.03e-02	5.7	5.7	5.7	5.7	-2670.8	-1995.7	-2590.9	1578.4	4666.5	1031.1
645	ok	0.09	0.6	1.08e-02	5.7	5.7	5.7	5.7	-2091.0	-2622.5	-3330.3	1713.9	4821.9	967.1
646	ok	0.09	0.5	1.12e-02	5.7	5.7	5.7	5.7	-1072.4	-4331.3	-1390.2	1597.4	3692.2	735.1
647	ok	0.09	0.4	1.18e-02	5.7	5.7	5.7	5.7	-994.1	-4611.0	-1260.5	1696.1	2907.9	90.3
648	ok	0.09	0.3	1.23e-02	5.7	5.7	5.7	5.7	-1043.4	-6022.2	926.9	1814.0	2272.8	-510.5
649	ok	0.09	0.3	1.28e-02	5.7	5.7	5.7	5.7	-1027.1	-5008.2	-337.4	1168.2	1813.0	-1184.5
650	ok	0.09	0.3	1.31e-02	5.7	5.7	5.7	5.7	-958.7	-5109.0	-184.3	952.1	808.9	-1474.9
651	ok	0.09	0.3	1.29e-02	5.7	5.7	5.7	5.7	481.8	-5391.6	-1412.6	767.7	-2261.7	-1655.3
652	ok	0.09	0.5	1.32e-02	5.7	5.7	5.7	5.7	2350.0	-4024.7	-1289.4	-205.8	-3143.9	-1719.1
653	ok	0.09	0.4	8.68e-03	5.7	5.7	5.7	5.7	-4288.4	-500.7	-2026.9	856.5	1960.3	1306.4
654	ok	0.09	0.5	1.01e-02	5.7	5.7	5.7	5.7	-2747.7	1024.3	-4633.0	1070.0	3535.2	1021.2
655	ok	0.09	0.6	1.13e-02	5.7	5.7	5.7	5.7	-1612.6	-1221.2	-2685.3	876.8	4590.7	957.8
656	ok	0.09	0.6	1.19e-02	5.7	5.7	5.7	5.7	-1208.4	-2102.5	-3373.6	907.9	4721.4	1078.9
657	ok	0.09	0.4	1.49e-02	5.7	5.7	5.7	5.7	-545.0	-5366.1	-1564.5	372.0	3136.9	970.3
658	ok	0.09	0.3	1.59e-02	5.7	5.7	5.7	5.7	-866.6	-6390.0	2553.5	1610.9	1321.4	395.0
659	ok	0.09	0.3	1.38e-02	5.7	5.7	5.7	5.7	-1204.8	-6873.6	1113.6	1049.0	1560.3	-839.9
660	ok	0.09	0.2	1.49e-02	5.7	5.7	5.7	5.7	-1252.8	-7105.6	1610.7	793.9	1733.3	-945.9
661	ok	0.09	0.2	1.88e-02	5.7	5.7	5.7	5.7	519.2	-6654.3	-3330.3	-551.1	-2661.2	-483.1
662	ok	0.09	0.4	1.61e-02	5.7	5.7	5.7	5.7	63.4	-6730.8	-1456.6	330.0	-3342.5	-1767.6
663	ok	0.09	0.5	1.33e-02	5.7	5.7	5.7	5.7	388.9	-6246.9	-3896.4	-160.3	-3552.4	-2472.6
664	ok	0.09	0.4	1.06e-02	5.7	5.7	5.7	5.7	-163.1	-5792.3	-877.0	192.6	-2050.4	-184.9
665	ok	0.09	0.2	7.98e-03	5.7	5.7	5.7	5.7	130.6	442.5	563.6	-513.3	-1.4	26.0
666	ok	0.09	0.6	1.17e-02	5.7	5.7	5.7	5.7	-883.4	3949.9	2343.7	868.7	2831.2	628.2
667	ok	0.09	0.7	1.69e-02	5.7	5.7	5.7	5.7	-930.2	3653.5	-428.4	186.2	4718.1	105.7
668	ok	0.09	0.7	1.86e-02	5.7	5.7	5.7	5.7	88.4	-184.4	-424.8	110.6	4580.7	550.7
669	ok	0.09	0.3	1.89e-02	5.7	5.7	5.7	5.7	618.9	-2984.8	-442.6	-154.1	2443.1	238.3
670	ok	0.09	0.3	2.03e-02	5.7	5.7	5.7	5.7	-82.8	-8417.9	-194.8	-426.1	-594.0	741.7
671	ok	0.09	0.2	1.92e-02	5.7	5.7	5.7	5.7	-372.1	-7850.3	-110.8	425.4	-324.8	731.9
672	ok	0.09	0.1	2.02e-02	5.7	5.7	5.7	5.7	-349.7	-8108.2	337.5	-88.3	796.2	-252.0
673	ok	0.09	0.3	2.08e-02	5.7	5.7	5.7	5.7	380.6	-1.064e+04	688.6	-612.4	-3550.1	-782.8
674	ok	0.09	0.6	1.55e-02	5.7	5.7	5.7	5.7	43.9	-6760.1	641.0	-542.6	-4734.5	-834.6
675	ok	0.09	0.3	1.32e-02	5.7	5.7	5.7	5.7	-5.5	-7895.7	825.7	-236.0	-3529.0	-78.6
676	ok	0.09	0.2	5.45e-03	5.7	5.7	5.7	5.7	0.5	-306.5	-269.8	-489.7	708.7	-493.4
677	ok	0.09	6.27e-02	8.96e-03	5.7	5.7	5.7	5.7	157.0	-1288.2	289.7	-115.5	359.0	-333.2
678	ok	0.09	0.1	3.23e-03	5.7	5.7	5.7	5.7	1786.8	643.9	-642.1	-302.3	-217.0	145.3
679	ok	0.09	6.84e-02	1.27e-02	5.7	5.7	5.7	5.7	-7.6	-4738.2	-23.4	235.7	186.9	-335.3
680	ok	0.09	8.26e-02	1.45e-02	5.7	5.7	5.7	5.7	108.7	-2445.6	-216.6	403.4	136.3	-126.8
681	ok	0.09	8.97e-02	1.53e-02	5.7	5.7	5.7	5.7	112.2	-2493.1	-89.9	373.2	110.1	-

Viale Duca Alessandro n. 11 – 43123 Parma
Cell. 335 1403156 – E mail ing.concari@gmail.com
Sito web: studioaire.it – P.IVA 02561480340

176.0														
682	ok	0.09	8.42e-02	1.54e-02	5.7	5.7	5.7	5.7	49.4	-4772.0	206.6	-235.9	-103.0	
261.9														
683	ok	0.09	7.83e-02	1.51e-02	5.7	5.7	5.7	5.7	193.5	-4185.2	-626.2	-155.7	-89.6	
398.6														
684	ok	0.09	8.12e-02	1.45e-02	5.7	5.7	5.7	5.7	101.2	-2891.5	136.2	143.4	35.1	
425.7														
685	ok	0.09	9.06e-02	1.33e-02	5.7	5.7	5.7	5.7	-35.2	-7963.3	-288.9	-227.8	52.8	
405.4														
686	ok	0.09	9.51e-02	1.17e-02	5.7	5.7	5.7	5.7	4.0	-6592.9	-441.1	-186.5	104.0	
427.3														
687	ok	0.09	9.26e-02	8.98e-03	5.7	5.7	5.7	5.7	34.1	-3520.3	-500.8	165.0	231.0	
360.6														
688	ok	0.09	8.86e-02	5.24e-03	5.7	5.7	5.7	5.7	65.9	-1393.2	-756.8	235.9	438.5	
203.1														
689	ok	0.09	8.78e-02	1.96e-03	5.7	5.7	5.7	5.7	543.3	680.4	-219.8	-158.8	537.1	
229.2														
690	ok	0.09	9.77e-02	9.37e-03	5.7	5.7	5.7	5.7	-2910.2	-1165.9	2169.0	872.9	-3.9	-
308.7														
691	ok	0.09	0.2	4.95e-03	5.7	5.7	5.7	5.7	-482.5	1581.4	-765.1	557.0	643.6	
786.2														
692	ok	0.09	0.2	1.53e-02	5.7	5.7	5.7	5.7	-5396.1	-2727.2	-809.4	771.4	-663.7	
742.6														
693	ok	0.09	0.4	1.09e-02	5.7	5.7	5.7	5.7	-2279.8	3520.6	-2199.0	1923.5	1354.8	-
851.7														

Nodo		x/d	V N/M	ver. rid	Af pr-	Af pr+	Af sec-	Af sec+	N x	N y	N xy	M x	M y	M
xy														
									-1.003e+04	-1.357e+04	-6790.25	-5158.31	-5638.41	-
2474.30														
		0.09	0.87	0.03	5.65	5.65	5.65	5.65	5944.47	6049.90	3131.01	3004.06	6007.57	
1800.27														

Nodo	Stato	Max tau daN/cm2	Ver V pr	Ver V sec	Af V pr	Af V sec	V pr daN/ m	V sec daN/ m
17	ok	0.73						
25	ok	0.93						
33	ok	1.19						
41	ok	1.37						
49	ok	1.54						
57	ok	1.66						
65	ok	1.75						
73	ok	1.80						
81	ok	1.83						
89	ok	1.84						
97	ok	1.84						
105	ok	1.84						
113	ok	1.80						
121	ok	1.72						
129	ok	1.65						
137	ok	1.44						
145	ok	2.16						
165	ok	0.82						
173	ok	1.33						
181	ok	1.66						
189	ok	1.86						
197	ok	1.99						
205	ok	2.07						
213	ok	2.11						
221	ok	2.13						
229	ok	2.17						
237	ok	2.21						
245	ok	2.23						
253	ok	2.23						
261	ok	2.23						
269	ok	2.20						
277	ok	2.06						
285	ok	1.83						
293	ok	1.38						
307	ok	1.52						
315	ok	1.96						
323	ok	2.08						
331	ok	2.10						
339	ok	2.10						
347	ok	2.02						
355	ok	1.86						
363	ok	1.65						
371	ok	1.43						
379	ok	1.11						
387	ok	0.73						
395	ok	2.48						
403	ok	2.48						
407	ok	0.53						
408	ok	0.48						
409	ok	0.45						
410	ok	0.43						
411	ok	2.41						
415	ok	0.40						
416	ok	0.40						
417	ok	0.41						
418	ok	0.41						
419	ok	1.61						
423	ok	0.40						
424	ok	0.40						
425	ok	0.37						
426	ok	0.34						

Viale Duca Alessandro n. 11 – 43123 Parma
Cell. 335 1403156 – E mail ing.concari@gmail.com
Sito web: studioaire.it – P.IVA 02561480340

427	ok	3.26
435	ok	3.26
443	ok	3.24
447	ok	0.42
448	ok	0.54
449	ok	0.82
450	ok	1.19
451	ok	1.77
455	ok	1.33
456	ok	1.33
457	ok	0.79
458	ok	0.36
459	ok	2.60
467	ok	2.84
475	ok	2.84
476	ok	1.52
477	ok	1.96
478	ok	2.08
479	ok	2.10
480	ok	2.10
481	ok	2.02
482	ok	1.86
483	ok	1.65
484	ok	1.43
485	ok	1.11
486	ok	0.73
487	ok	1.33
488	ok	1.27
489	ok	1.47
490	ok	1.52
491	ok	1.52
492	ok	1.50
493	ok	1.39
494	ok	1.22
495	ok	0.97
496	ok	0.67
497	ok	0.93
498	ok	1.66
499	ok	0.91
500	ok	1.02
501	ok	1.12
502	ok	1.14
503	ok	1.14
504	ok	1.07
505	ok	0.94
506	ok	0.77
507	ok	0.87
508	ok	1.19
509	ok	1.86
510	ok	1.08
511	ok	0.76
512	ok	0.83
513	ok	0.86
514	ok	0.86
515	ok	0.84
516	ok	0.79
517	ok	0.90
518	ok	1.10
519	ok	1.37
520	ok	1.99
521	ok	0.53
522	ok	1.24
523	ok	0.84
524	ok	0.61
525	ok	0.69
526	ok	0.75
527	ok	0.79
528	ok	0.87
529	ok	1.05
530	ok	1.27
531	ok	1.54
532	ok	2.07
533	ok	1.36
534	ok	0.91
535	ok	0.56
536	ok	0.64
537	ok	0.76
538	ok	0.84
539	ok	0.94
540	ok	1.16
541	ok	1.40
542	ok	1.66
543	ok	2.11
544	ok	1.45
545	ok	0.97
546	ok	0.57
547	ok	0.61
548	ok	0.77
549	ok	0.88
550	ok	1.00
551	ok	1.24
552	ok	1.49
553	ok	1.75
554	ok	2.13
555	ok	1.51
556	ok	1.01
557	ok	0.59
558	ok	0.59

Viale Duca Alessandro n. 11 – 43123 Parma
Cell. 335 1403156 – E mail ing.concari@gmail.com
Sito web: studioaire.it – P.IVA 02561480340

559	ok	0.77
560	ok	0.90
561	ok	1.04
562	ok	1.29
563	ok	1.55
564	ok	1.80
565	ok	2.17
566	ok	1.54
567	ok	1.03
568	ok	0.59
569	ok	0.57
570	ok	0.78
571	ok	0.92
572	ok	1.06
573	ok	1.32
574	ok	1.58
575	ok	1.83
576	ok	2.21
577	ok	1.55
578	ok	1.03
579	ok	0.59
580	ok	0.56
581	ok	0.78
582	ok	0.93
583	ok	1.06
584	ok	1.33
585	ok	1.59
586	ok	1.84
587	ok	2.23
588	ok	1.55
589	ok	1.03
590	ok	0.59
591	ok	0.58
592	ok	0.78
593	ok	0.93
594	ok	1.06
595	ok	1.33
596	ok	1.59
597	ok	1.84
598	ok	2.23
599	ok	1.53
600	ok	1.01
601	ok	0.58
602	ok	0.60
603	ok	0.79
604	ok	0.93
605	ok	1.05
606	ok	1.31
607	ok	1.57
608	ok	1.84
609	ok	2.23
610	ok	1.48
611	ok	0.97
612	ok	0.57
613	ok	0.64
614	ok	0.80
615	ok	0.92
616	ok	1.01
617	ok	1.26
618	ok	1.52
619	ok	1.80
620	ok	2.20
621	ok	1.40
622	ok	0.92
623	ok	0.58
624	ok	0.72
625	ok	0.83
626	ok	0.91
627	ok	0.96
628	ok	1.17
629	ok	1.42
630	ok	1.72
631	ok	2.06
632	ok	1.26
633	ok	0.86
634	ok	0.66
635	ok	0.86
636	ok	0.95
637	ok	0.95
638	ok	0.91
639	ok	1.05
640	ok	1.25
641	ok	1.65
642	ok	1.83
643	ok	1.10
644	ok	1.08
645	ok	1.09
646	ok	1.19
647	ok	1.31
648	ok	1.31
649	ok	1.14
650	ok	1.14
651	ok	1.04
652	ok	1.44
653	ok	2.48
654	ok	2.48
655	ok	2.41
656	ok	1.15

Viale Duca Alessandro n. 11 – 43123 Parma
Cell. 335 1403156 – E mail ing.concari@gmail.com
Sito web: studioaire.it – P.IVA 02561480340

657	ok	3.26
658	ok	3.26
659	ok	3.24
660	ok	1.77
661	ok	2.60
662	ok	2.80
663	ok	2.80
664	ok	1.45
665	ok	1.05
666	ok	1.65
667	ok	1.65
668	ok	1.61
669	ok	2.64
670	ok	2.64
671	ok	2.24
672	ok	1.34
673	ok	1.71
674	ok	2.84
675	ok	2.84
676	ok	2.53
677	ok	0.55
678	ok	0.23
679	ok	0.62
680	ok	0.62
681	ok	0.51
682	ok	0.47
683	ok	0.52
684	ok	0.53
685	ok	0.53
686	ok	0.51
687	ok	0.46
688	ok	0.43
689	ok	0.43
690	ok	0.48
691	ok	0.73
692	ok	1.05
693	ok	2.53

Nodo	Max tau	Ver V pr	Ver V sec	Af V pr	Af V sec	V pr	V sec
	3.26						

2.4 – VERIFICHE SLE

VERIFICHE ELEMENTI IN ACCIAIO

MODELLO 1 SCALA ANTINCENDIO

Trave	f*1000/L	Trave	f*1000/L	Trave	f*1000/L	Trave	f*1000/L	Trave	f*1000/L	Trave	f*1000/L	Trave	f*1000/L
1	1.4	3	0.3	6	1.2	7	0.4	8	0.6	9	0.4	10	0.5
11	0.4	12	0.7	13	0.7	14	0.3	15	0.3	18	0.3	19	0.5
20	0.3	21	0.5	22	0.3	23	0.7	24	1.0	25	0.4	26	0.2
27	0.2	28	0.9	29	0.5	30	1.0	31	0.5	32	4.2	33	6.8
34	1.7	35	0.5	36	0.4	37	0.4	38	0.4	39	0.4	40	2.3

MODELLO 2 VANO ASCENSORE

Trave	f*1000/L	Trave	f*1000/L	Trave	f*1000/L	Trave	f*1000/L	Trave	f*1000/L	Trave	f*1000/L	Trave	f*1000/L
5	0.2	6	0.6	7	0.1	8	0.5	9	0.8	10	0.3	11	1.6
18	0.2	19	0.2	20	0.2	21	0.2	22	0.2	23	1.3		

VERIFICHE ELEMENTI IN C.A.

MODELLO 2 SCALA ANTINCENDIO

Guscio	rRfck	rRfyk	rPfck	Rif. cmb	wR	wF	wP	Rif. cmb
					mm	mm	mm	
1	0.01	0.03	9.76e-03	290,290,328	0.0	0.0	0.0	0,0,0
2	0.06	0.13	0.06	256,254,328	0.0	0.0	0.0	0,0,0
3	0.07	0.16	0.07	256,254,328	0.0	0.0	0.0	0,0,0
4	0.03	0.06	0.02	304,302,328	0.0	0.0	0.0	0,0,0
5	0.03	0.06	0.02	304,302,328	0.0	0.0	0.0	0,0,0
6	0.02	0.06	0.02	304,302,328	0.0	0.0	0.0	0,0,0
7	0.11	0.24	0.09	301,301,327	0.0	0.0	0.0	0,0,0

Viale Duca Alessandro n. 11 – 43123 Parma
Cell. 335 1403156 – E mail ing.concari@gmail.com
Sito web: studioaire.it – P.IVA 02561480340

8	0.12	0.26	0.10	303,303,327	0.0	0.0	0.0	0,0,0
9	0.02	0.05	0.02	304,304,328	0.0	0.0	0.0	0,0,0
10	0.02	0.04	9.33e-03	292,290,327	0.0	0.0	0.0	0,0,0
11	0.09	0.20	0.04	292,292,328	0.0	0.0	0.0	0,0,0
12	0.08	0.18	0.04	291,289,327	0.0	0.0	0.0	0,0,0
13	0.05	0.10	0.04	276,274,328	0.0	0.0	0.0	0,0,0
14	0.05	0.11	0.04	276,274,328	0.0	0.0	0.0	0,0,0
15	0.05	0.11	0.04	276,274,328	0.0	0.0	0.0	0,0,0
16	0.17	0.35	0.12	292,292,328	0.0	0.0	0.0	0,0,0
17	0.19	0.41	0.15	303,301,327	0.0	0.0	0.0	0,0,0
18	0.03	0.07	0.03	304,302,328	0.0	0.0	0.0	0,0,0
19	0.02	0.05	0.02	256,254,328	0.0	0.0	0.0	0,0,0
20	0.05	0.11	0.04	274,274,328	0.0	0.0	0.0	0,0,0
21	0.05	0.12	0.05	274,274,328	0.0	0.0	0.0	0,0,0
22	0.03	0.07	0.03	304,302,328	0.0	0.0	0.0	0,0,0
23	0.03	0.08	0.03	304,302,328	0.0	0.0	0.0	0,0,0
24	0.04	0.09	0.03	303,301,327	0.0	0.0	0.0	0,0,0
25	0.09	0.20	0.08	301,301,327	0.0	0.0	0.0	0,0,0
26	0.09	0.21	0.08	301,301,327	0.0	0.0	0.0	0,0,0
27	0.05	0.11	0.04	303,301,327	0.0	0.0	0.0	0,0,0
28	0.03	0.07	0.03	276,274,328	0.0	0.0	0.0	0,0,0
29	0.04	0.08	0.03	303,301,327	0.0	0.0	0.0	0,0,0
30	0.04	0.09	0.03	304,322,327	0.0	0.0	0.0	0,0,0
31	0.04	0.10	0.04	304,302,328	0.0	0.0	0.0	0,0,0
32	0.05	0.11	0.04	304,302,328	0.0	0.0	0.0	0,0,0
33	0.06	0.13	0.05	303,301,327	0.0	0.0	0.0	0,0,0
34	0.07	0.15	0.06	303,301,327	0.0	0.0	0.0	0,0,0
35	0.07	0.15	0.06	303,301,327	0.0	0.0	0.0	0,0,0
36	0.07	0.15	0.06	303,301,327	0.0	0.0	0.0	0,0,0
37	0.03	0.08	0.03	276,274,328	0.0	0.0	0.0	0,0,0
38	0.05	0.10	0.03	292,290,328	0.0	0.0	0.0	0,0,0
39	0.04	0.09	0.03	292,290,328	0.0	0.0	0.0	0,0,0
40	0.04	0.10	0.04	276,274,328	0.0	0.0	0.0	0,0,0
41	0.05	0.12	0.04	276,274,328	0.0	0.0	0.0	0,0,0
42	0.06	0.12	0.05	276,274,328	0.0	0.0	0.0	0,0,0
43	0.03	0.08	0.03	276,274,328	0.0	0.0	0.0	0,0,0
44	0.04	0.09	0.03	276,274,327	0.0	0.0	0.0	0,0,0
45	0.04	0.09	0.03	304,302,327	0.0	0.0	0.0	0,0,0
46	0.05	0.10	0.04	304,302,328	0.0	0.0	0.0	0,0,0
47	0.05	0.12	0.05	276,274,328	0.0	0.0	0.0	0,0,0
48	0.06	0.13	0.05	303,301,327	0.0	0.0	0.0	0,0,0
49	0.13	0.29	0.11	302,302,328	0.0	0.0	0.0	0,0,0
50	0.04	0.09	0.04	275,275,327	0.0	0.0	0.0	0,0,0
51	0.07	0.15	0.06	303,301,327	0.0	0.0	0.0	0,0,0
52	0.07	0.15	0.06	303,301,327	0.0	0.0	0.0	0,0,0
53	0.13	0.29	0.12	274,274,328	0.0	0.0	0.0	0,0,0
54	0.07	0.15	0.06	303,301,327	0.0	0.0	0.0	0,0,0
55	0.03	0.07	0.01	292,290,328	0.0	0.0	0.0	0,0,0
56	0.07	0.17	0.04	292,290,327	0.0	0.0	0.0	0,0,0
57	0.07	0.15	0.04	288,288,327	0.0	0.0	0.0	0,0,0
58	0.04	0.10	0.03	276,274,328	0.0	0.0	0.0	0,0,0
59	0.05	0.11	0.04	276,274,328	0.0	0.0	0.0	0,0,0
60	0.05	0.11	0.04	276,274,328	0.0	0.0	0.0	0,0,0
61	0.16	0.35	0.14	274,274,328	0.0	0.0	0.0	0,0,0
62	0.23	0.51	0.17	301,301,327	0.0	0.0	0.0	0,0,0
63	0.04	0.08	0.03	302,302,328	0.0	0.0	0.0	0,0,0
64	0.03	0.08	0.03	276,274,328	0.0	0.0	0.0	0,0,0
65	0.04	0.08	0.03	303,301,327	0.0	0.0	0.0	0,0,0
66	0.04	0.09	0.04	304,322,327	0.0	0.0	0.0	0,0,0
67	0.05	0.10	0.04	304,274,328	0.0	0.0	0.0	0,0,0
68	0.05	0.12	0.05	304,302,328	0.0	0.0	0.0	0,0,0
69	0.06	0.14	0.05	303,301,327	0.0	0.0	0.0	0,0,0
70	0.07	0.15	0.06	303,301,327	0.0	0.0	0.0	0,0,0
71	0.07	0.15	0.06	303,301,327	0.0	0.0	0.0	0,0,0
72	0.07	0.15	0.06	303,303,327	0.0	0.0	0.0	0,0,0
73	0.02	0.04	9.43e-03	286,290,328	0.0	0.0	0.0	0,0,0
74	0.09	0.19	0.05	290,290,328	0.0	0.0	0.0	0,0,0
75	0.10	0.21	0.06	290,290,328	0.0	0.0	0.0	0,0,0
76	0.03	0.06	0.03	304,302,328	0.0	0.0	0.0	0,0,0
77	0.02	0.06	0.02	304,302,328	0.0	0.0	0.0	0,0,0
78	0.03	0.07	0.02	289,289,328	0.0	0.0	0.0	0,0,0
79	0.16	0.35	0.09	290,290,327	0.0	0.0	0.0	0,0,0
80	0.16	0.35	0.11	289,289,327	0.0	0.0	0.0	0,0,0
81	0.02	0.05	0.02	304,304,328	0.0	0.0	0.0	0,0,0

Guscio	**rRfck**	**rRfyk**	**rPfck**	**wR**	**wF**	**wP**
	0.23	0.51	0.17	0.0	0.0	0.0

Viale Duca Alessandro n. 11 – 43123 Parma
Cell. 335 1403156 – E mail ing.concari@gmail.com
Sito web: studioaire.it – P.IVA 02561480340

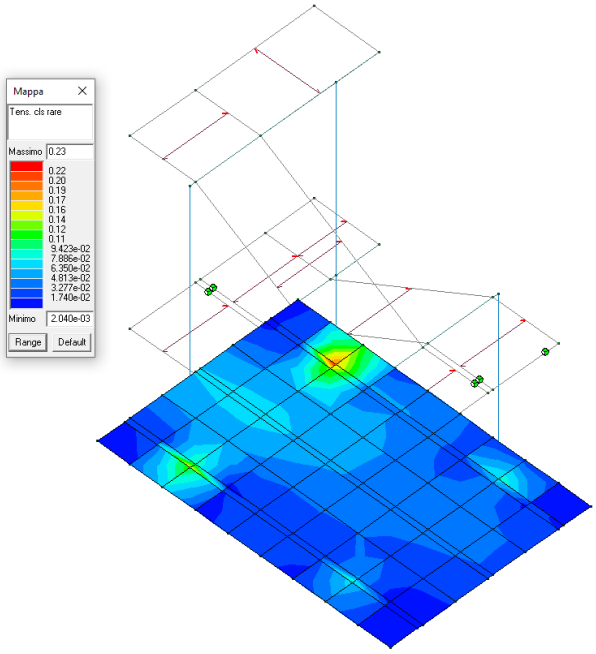

Verifica SLE – tensioni cls in cond.rare

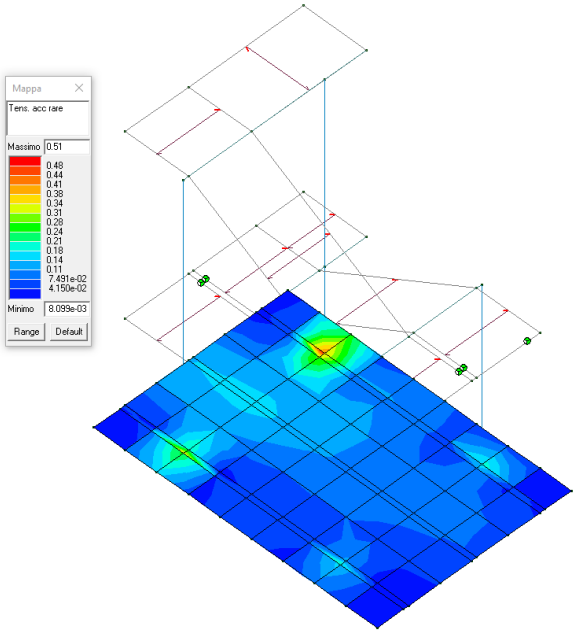

Verifica SLE – tensioni acciaio in cond.rare

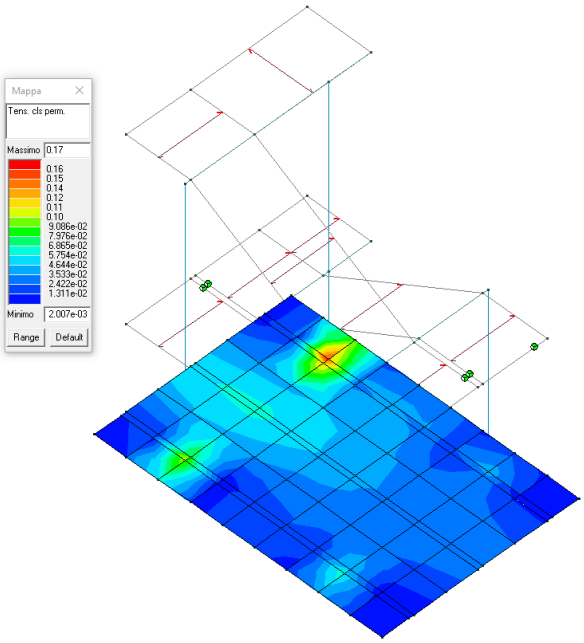

Verifica SLE – tensioni cls in cond.perm.

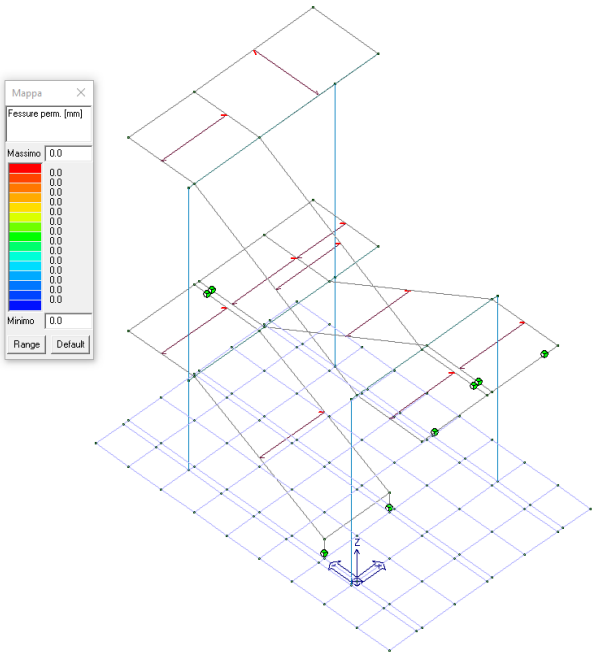

Verifica SLE – fessurazioni nulle in cond.rare/freq./perm.

MODELLO 1 VANO ASCENSORE

Trave	Pos.	rRfck	rRfyk	rPfck	Rif. cmb	wR	wF	wP	Rif. cmb	dR	dF	dP	Rif. cmb
	cm					mm	mm	mm		cm	cm	cm	
1	0.0	0.01	0.07	0.01	131,159,181	0.0	0.0	0.0	0,0,0	-0.94	-0.55	-0.33	142,172,180
	27.0	7.30e-03	0.05	3.85e-03	143,159,182	0.0	0.0	0.0	0,0,0				
	54.0	4.78e-03	0.04	0.0	142,159,0	0.0	0.0	0.0	0,0,0				
2	0.0	8.02e-03	0.06	2.73e-03	157,160,179	0.0	0.0	0.0	0,0,0	0.05	-0.03	-0.03	152,171,179
	25.0	6.10e-03	0.06	5.69e-03	159,152,181	0.0	0.0	0.0	0,0,0				

Viale Duca Alessandro n. 11 – 43123 Parma
Cell. 335 1403156 – E mail ing.concari@gmail.com
Sito web: studioaire.it – P.IVA 02561480340

Trave	Pos.	rRfck	rRfyk	rPfck	Rif. cmb	wR	wF	wP	Rif. cmb	dR	dF	dP	Rif. cmb
	50.0	0.0	0.04	0.0	0,152,0	0.0	0.0	0.0	0,0,0				
3	0.0	0.01	0.03	0.01	152,160,182	0.0	0.0	0.0	0,0,0	-0.94	-0.56	-0.34	142,172,180
	27.0	0.01	0.02	9.50e-03	144,160,182	0.0	0.0	0.0	0,0,0				
	54.0	0.01	0.01	3.78e-03	142,159,180	0.0	0.0	0.0	0,0,0				
4	0.0	0.0	0.07	0.0	0,152,0	0.0	0.0	0.0	0,0,0	0.05	-0.04	-0.04	152,171,179
	25.0	0.0	0.06	0.0	0,151,0	0.0	0.0	0.0	0,0,0				
	50.0	0.0	0.08	0.0	0,140,0	0.0	0.0	0.0	0,0,0				
5	0.0	4.16e-03	0.03	0.0	142,160,0	0.0	0.0	0.0	0,0,0	-0.94	-0.56	-0.34	142,172,180
	27.0	3.53e-03	0.03	0.0	141,160,0	0.0	0.0	0.0	0,0,0				
	54.0	6.38e-04	0.03	0.0	141,160,0	0.0	0.0	0.0	0,0,0				
6	0.0	2.79e-03	0.02	1.80e-03	160,140,181	0.0	0.0	0.0	0,0,0	0.05	-0.03	-0.03	140,175,179
	25.0	9.56e-03	0.02	0.01	151,140,181	0.0	0.0	0.0	0,0,0				
	50.0	2.92e-03	0.01	3.21e-03	157,144,179	0.0	0.0	0.0	0,0,0				
7	0.0	1.18e-03	4.93e-03	8.70e-04	142,159,180	0.0	0.0	0.0	0,0,0	-0.94	-0.55	-0.34	142,172,180
	27.0	1.80e-03	7.45e-03	2.33e-03	130,159,180	0.0	0.0	0.0	0,0,0				
	54.0	1.31e-03	5.70e-03	3.11e-04	142,159,180	0.0	0.0	0.0	0,0,0				
8	0.0	2.69e-03	0.03	0.0	142,160,0	0.0	0.0	0.0	0,0,0	0.05	-0.04	-0.04	152,171,179
	25.0	4.49e-03	0.03	0.0	141,160,0	0.0	0.0	0.0	0,0,0				
	50.0	5.68e-05	0.03	0.0	141,160,0	0.0	0.0	0.0	0,0,0				
9	0.0	6.11e-03	0.02	7.95e-04	157,144,179	0.0	0.0	0.0	0,0,0	-0.94	-0.56	-0.34	142,172,180
	27.0	8.81e-03	0.01	6.54e-03	159,143,181	0.0	0.0	0.0	0,0,0				
	54.0	9.04e-03	0.02	8.88e-03	151,143,181	0.0	0.0	0.0	0,0,0				
10	0.0	0.0	0.06	0.0	0,140,0	0.0	0.0	0.0	0,0,0	0.05	-0.04	-0.04	152,171,179
	25.0	0.0	0.05	0.0	0,140,0	0.0	0.0	0.0	0,0,0				
	50.0	0.0	0.05	0.0	0,140,0	0.0	0.0	0.0	0,0,0				
11	0.0	3.63e-03	0.04	0.0	142,159,0	0.0	0.0	0.0	0,0,0	-0.94	-0.55	-0.34	142,172,180
	27.0	5.16e-03	0.03	0.0	143,159,0	0.0	0.0	0.0	0,0,0				
	54.0	4.81e-03	0.04	0.0	143,159,0	0.0	0.0	0.0	0,0,0				
12	0.0	8.59e-03	0.01	3.35e-03	142,159,180	0.0	0.0	0.0	0,0,0	-0.94	-0.56	-0.34	142,172,180
	27.0	4.99e-03	0.01	3.72e-03	142,159,180	0.0	0.0	0.0	0,0,0				
	54.0	6.01e-03	0.01	8.51e-04	142,159,179	0.0	0.0	0.0	0,0,0				
13	0.0	2.41e-03	8.60e-03	1.29e-03	141,160,179	0.0	0.0	0.0	0,0,0	-0.94	-0.56	-0.34	142,172,180
	27.0	3.14e-03	7.60e-03	2.02e-03	141,160,179	0.0	0.0	0.0	0,0,0				
	54.0	2.61e-03	6.97e-03	1.01e-03	141,160,179	0.0	0.0	0.0	0,0,0				
14	0.0	5.20e-03	4.94e-03	6.42e-03	159,159,181	0.0	0.0	0.0	0,0,0	0.05	-0.03	-0.03	140,175,179
	25.0	0.01	0.01	0.02	151,140,181	0.0	0.0	0.0	0,0,0				
	50.0	5.37e-03	5.06e-03	6.78e-03	151,151,181	0.0	0.0	0.0	0,0,0				
15	0.0	3.62e-03	0.02	1.44e-03	141,160,179	0.0	0.0	0.0	0,0,0	0.05	-0.04	-0.04	152,171,179
	25.0	9.24e-03	0.03	7.93e-03	139,160,181	0.0	0.0	0.0	0,0,0				
	50.0	3.47e-03	0.02	8.73e-04	141,160,179	0.0	0.0	0.0	0,0,0				
16	0.0	0.0	0.04	0.0	0,151,0	0.0	0.0	0.0	0,0,0	0.05	-0.04	-0.04	152,171,179
	25.0	0.0	0.04	0.0	0,139,0	0.0	0.0	0.0	0,0,0				
	50.0	0.0	0.03	0.0	0,139,0	0.0	0.0	0.0	0,0,0				
17	0.0	0.01	0.03	1.26e-03	144,159,182	0.0	0.0	0.0	0,0,0	-0.94	-0.55	-0.34	142,172,180
	27.0	0.01	0.03	1.95e-03	144,159,180	0.0	0.0	0.0	0,0,0				
	54.0	8.49e-03	0.03	0.0	142,159,0	0.0	0.0	0.0	0,0,0				
18	0.0	0.0	0.01	0.0	0,140,0	0.0	0.0	0.0	0,0,0	-0.94	-0.56	-0.34	142,172,180
	27.0	2.99e-03	0.01	0.0	157,160,0	0.0	0.0	0.0	0,0,0				
	54.0	3.80e-03	0.02	0.0	157,144,0	0.0	0.0	0.0	0,0,0				
19	0.0	3.45e-03	7.30e-03	4.18e-03	159,142,181	0.0	0.0	0.0	0,0,0	0.05	0.03	-0.03	140,170,179
	25.0	9.25e-03	0.01	0.01	152,144,182	0.0	0.0	0.0	0,0,0				
	50.0	5.80e-03	6.66e-03	5.88e-03	159,137,181	0.0	0.0	0.0	0,0,0				
20	0.0	2.24e-03	0.02	0.0	141,159,0	0.0	0.0	0.0	0,0,0	0.05	-0.04	-0.04	152,171,179
	25.0	9.07e-03	0.03	7.43e-03	140,160,182	0.0	0.0	0.0	0,0,0				
	50.0	2.15e-03	0.02	0.0	141,159,0	0.0	0.0	0.0	0,0,0				
21	0.0	0.0	0.02	0.0	0,139,0	0.0	0.0	0.0	0,0,0	0.05	-0.04	-0.04	152,171,179
	25.0	0.0	0.03	0.0	0,139,0	0.0	0.0	0.0	0,0,0				
	50.0	0.0	0.02	0.0	0,139,0	0.0	0.0	0.0	0,0,0				
22	0.0	7.04e-03	0.02	0.0	142,159,0	0.0	0.0	0.0	0,0,0	-0.94	-0.55	-0.34	142,172,180
	27.0	6.06e-03	0.02	2.04e-03	142,159,180	0.0	0.0	0.0	0,0,0				
	54.0	3.23e-03	0.02	4.75e-04	142,159,180	0.0	0.0	0.0	0,0,0				
23	0.0	5.41e-03	0.03	0.0	157,144,0	0.0	0.0	0.0	0,0,0	-0.94	-0.56	-0.34	142,172,180
	27.0	8.80e-03	0.04	4.13e-03	160,144,182	0.0	0.0	0.0	0,0,0				
	54.0	0.01	0.05	0.01	152,144,182	0.0	0.0	0.0	0,0,0				
24	0.0	3.17e-03	0.02	6.11e-04	159,137,181	0.0	0.0	0.0	0,0,0	0.05	-0.03	-0.03	140,175,179
	25.0	2.92e-03	0.03	4.45e-03	132,144,182	0.0	0.0	0.0	0,0,0				
	50.0	5.26e-03	0.02	0.0	159,142,0	0.0	0.0	0.0	0,0,0				
25	0.0	5.57e-03	0.01	2.36e-03	142,159,180	0.0	0.0	0.0	0,0,0	0.05	-0.04	-0.04	152,171,179
	25.0	0.01	0.02	0.01	140,159,182	0.0	0.0	0.0	0,0,0				
	50.0	5.36e-03	0.01	2.10e-03	142,159,180	0.0	0.0	0.0	0,0,0				
26	0.0	3.30e-03	5.85e-03	3.25e-03	142,143,180	0.0	0.0	0.0	0,0,0	0.05	-0.04	-0.04	152,171,179
	25.0	8.30e-03	0.02	8.61e-03	144,143,182	0.0	0.0	0.0	0,0,0				
	50.0	6.13e-03	0.01	4.91e-03	142,143,180	0.0	0.0	0.0	0,0,0				
27	0.0	0.0	0.06	0.0	0,144,0	0.0	0.0	0.0	0,0,0	0.05	-0.03	-0.03	140,175,179
	25.0	0.0	0.05	0.0	0,144,0	0.0	0.0	0.0	0,0,0				
	50.0	0.0	0.05	0.0	0,142,0	0.0	0.0	0.0	0,0,0				
28	0.0	5.45e-03	0.01	2.17e-03	142,159,180	0.0	0.0	0.0	0,0,0	0.05	-0.04	-0.04	152,171,179
	25.0	8.47e-03	0.01	6.04e-03	142,159,182	0.0	0.0	0.0	0,0,0				
	50.0	5.59e-03	0.01	2.02e-03	142,159,180	0.0	0.0	0.0	0,0,0				
29	0.0	0.0	0.06	0.0	0,144,0	0.0	0.0	0.0	0,0,0	0.05	-0.03	-0.03	140,175,179
	25.0	0.0	0.05	0.0	0,144,0	0.0	0.0	0.0	0,0,0				
	50.0	0.0	0.05	0.0	0,144,0	0.0	0.0	0.0	0,0,0				
30	0.0	4.96e-03	0.01	1.46e-03	142,159,180	0.0	0.0	0.0	0,0,0	0.05	-0.04	-0.04	140,175,179
	25.0	7.92e-03	0.02	5.81e-03	142,159,182	0.0	0.0	0.0	0,0,0				
	50.0	5.02e-03	0.01	1.44e-03	142,159,180	0.0	0.0	0.0	0,0,0				
31	0.0	0.0	0.04	0.0	0,144,0	0.0	0.0	0.0	0,0,0	0.05	-0.04	-0.04	152,171,179
	25.0	0.0	0.04	0.0	0,144,0	0.0	0.0	0.0	0,0,0				
	50.0	0.0	0.04	0.0	0,144,0	0.0	0.0	0.0	0,0,0				
32	0.0	3.59e-03	0.02	4.51e-04	142,159,180	0.0	0.0	0.0	0,0,0	0.05	-0.04	-0.04	140,175,179
	25.0	6.56e-03	0.02	4.58e-03	142,159,180	0.0	0.0	0.0	0,0,0				
	50.0	3.67e-03	0.02	7.95e-04	142,159,180	0.0	0.0	0.0	0,0,0				
33	0.0	0.0	0.03	0.0	0,144,0	0.0	0.0	0.0	0,0,0	0.05	-0.04	-0.04	152,171,179
	25.0	0.0	0.03	0.0	0,144,0	0.0	0.0	0.0	0,0,0				

Viale Duca Alessandro n. 11 – 43123 Parma
Cell. 335 1403156 – E mail ing.concari@gmail.com
Sito web: studioaire.it – P.IVA 02561480340

Trave	Pos.	rRfck	rRfyk	rPfck	Rif. cmb	wR	wF	wP	Rif. cmb	dR	dF	dP	Rif. cmb
	50.0	0.0	0.03	0.0	0,144,0	0.0	0.0	0.0	0,0,0				
34	0.0	2.68e-03	0.03	0.0	142,159,0	0.0	0.0	0.0	0,0,0	0.05	-0.04	-0.04	140,175,179
	25.0	4.80e-03	0.03	2.17e-03	142,159,180	0.0	0.0	0.0	0,0,0				
	50.0	4.54e-03	0.03	4.02e-04	143,159,180	0.0	0.0	0.0	0,0,0				
35	0.0	0.0	0.01	0.0	0,143,0	0.0	0.0	0.0	0,0,0	0.05	-0.04	-0.04	152,171,179
	25.0	4.33e-04	0.02	0.0	158,144,0	0.0	0.0	0.0	0,0,0				
	50.0	0.0	0.02	0.0	0,144,0	0.0	0.0	0.0	0,0,0				
36	0.0	2.77e-03	0.04	0.0	144,159,0	0.0	0.0	0.0	0,0,0	0.05	-0.04	-0.04	140,175,179
	25.0	4.11e-03	0.05	2.86e-03	158,159,180	0.0	0.0	0.0	0,0,0				
	50.0	8.94e-03	0.06	6.37e-04	158,159,180	0.0	0.0	0.0	0,0,0				
61	0.0	0.02	0.07	0.02	140,160,182	0.0	0.0	0.0	0,0,0	-0.94	-0.55	-0.34	142,172,180
	27.0	0.01	0.05	6.70e-03	144,160,182	0.0	0.0	0.0	0,0,0				
	54.0	4.31e-03	0.04	0.0	142,160,0	0.0	0.0	0.0	0,0,0				
62	0.0	6.62e-03	0.03	2.37e-03	141,144,179	0.0	0.0	0.0	0,0,0	0.05	-0.03	-0.03	140,175,179
	25.0	9.79e-03	0.04	9.83e-03	139,144,181	0.0	0.0	0.0	0,0,0				
	50.0	1.13e-03	0.02	0.0	159,140,0	0.0	0.0	0.0	0,0,0				
Trave		**rRfck**	**rRfyk**	**rPfck**		**wR**	**wF**	**wP**		**dR**	**dF**	**dP**	
										-0.94	-0.56	-0.34	
		0.02	0.08	0.02		0.0	0.0	0.0		0.05	0.03	-0.03	

Setto	rRfck	rRfyk	rPfck	Rif. cmb	wR	wF	wP	Rif. cmb
					mm	mm	mm	
1	0.03	0.06	0.04	140,142,182	0.0	0.0	0.0	0,0,0
2	0.05	0.07	0.05	140,142,182	0.0	0.0	0.0	0,0,0
3	0.08	0.10	0.08	140,144,182	0.0	0.0	0.0	0,0,0
4	0.05	0.35	0.05	143,143,181	0.0	0.0	0.0	0,0,0
5	0.05	0.18	0.05	139,143,181	0.0	0.0	0.0	0,0,0
6	0.03	0.07	0.02	143,143,182	0.0	0.0	0.0	0,0,0
7	0.02	0.04	0.02	160,142,182	0.0	0.0	0.0	0,0,0
8	0.02	0.05	0.02	141,141,182	0.0	0.0	0.0	0,0,0
9	0.04	0.08	0.03	141,141,182	0.0	0.0	0.0	0,0,0
10	0.06	0.13	0.04	141,141,182	0.0	0.0	0.0	0,0,0
11	0.02	0.26	0.02	139,140,181	0.0	0.0	0.0	0,0,0
12	0.02	0.12	0.02	139,143,181	0.0	0.0	0.0	0,0,0
13	0.01	0.06	0.01	152,143,182	0.0	0.0	0.0	0,0,0
14	0.02	0.06	0.02	143,143,182	0.0	0.0	0.0	0,0,0
15	0.02	0.06	0.02	142,141,182	0.0	0.0	0.0	0,0,0
16	0.03	0.05	0.02	142,141,182	0.0	0.0	0.0	0,0,0
17	0.05	0.09	0.03	141,142,179	0.0	0.0	0.0	0,0,0
18	9.84e-03	0.16	8.88e-03	143,139,182	0.0	0.0	0.0	0,0,0
19	9.53e-03	0.09	0.01	140,143,182	0.0	0.0	0.0	0,0,0
20	0.01	0.08	0.01	139,143,182	0.0	0.0	0.0	0,0,0
21	0.02	0.08	0.01	143,143,181	0.0	0.0	0.0	0,0,0
22	0.02	0.07	0.02	144,143,181	0.0	0.0	0.0	0,0,0
23	0.02	0.07	0.02	142,143,181	0.0	0.0	0.0	0,0,0
24	0.04	0.06	0.03	142,142,181	0.0	0.0	0.0	0,0,0
25	0.02	0.10	0.01	143,140,181	0.0	0.0	0.0	0,0,0
26	0.02	0.10	0.01	143,143,181	0.0	0.0	0.0	0,0,0
27	0.02	0.09	0.01	141,143,181	0.0	0.0	0.0	0,0,0
28	0.02	0.09	0.01	143,143,181	0.0	0.0	0.0	0,0,0
29	0.02	0.08	0.01	143,143,181	0.0	0.0	0.0	0,0,0
30	0.02	0.07	0.02	143,143,181	0.0	0.0	0.0	0,0,0
31	0.03	0.06	0.03	142,143,181	0.0	0.0	0.0	0,0,0
32	0.05	0.12	0.04	143,143,181	0.0	0.0	0.0	0,0,0
33	0.04	0.10	0.03	143,144,181	0.0	0.0	0.0	0,0,0
84	0.03	0.34	0.03	139,142,181	0.0	0.0	0.0	0,0,0
85	0.03	0.09	0.02	143,143,181	0.0	0.0	0.0	0,0,0
86	0.02	0.08	0.01	141,143,181	0.0	0.0	0.0	0,0,0
87	0.01	0.07	0.01	144,143,182	0.0	0.0	0.0	0,0,0
88	0.02	0.10	0.02	144,143,182	0.0	0.0	0.0	0,0,0
89	0.03	0.11	0.03	143,143,181	0.0	0.0	0.0	0,0,0
90	0.06	0.14	0.06	143,143,181	0.0	0.0	0.0	0,0,0
91	0.05	0.25	0.05	143,142,181	0.0	0.0	0.0	0,0,0
92	0.03	0.30	0.04	143,142,181	0.0	0.0	0.0	0,0,0
93	0.02	0.05	0.03	152,142,182	0.0	0.0	0.0	0,0,0
94	0.03	0.12	0.04	152,144,182	0.0	0.0	0.0	0,0,0
95	0.03	0.08	0.03	149,140,179	0.0	0.0	0.0	0,0,0
96	0.06	0.09	0.06	149,138,179	0.0	0.0	0.0	0,0,0
97	0.07	0.11	0.07	149,138,179	0.0	0.0	0.0	0,0,0
98	0.07	0.10	0.07	149,138,179	0.0	0.0	0.0	0,0,0
99	0.06	0.13	0.06	150,152,180	0.0	0.0	0.0	0,0,0
100	0.05	0.22	0.04	160,160,182	0.0	0.0	0.0	0,0,0
101	0.04	0.09	0.05	140,143,182	0.0	0.0	0.0	0,0,0
102	0.03	0.09	0.03	140,139,182	0.0	0.0	0.0	0,0,0
103	0.03	0.09	0.03	138,140,180	0.0	0.0	0.0	0,0,0
104	0.03	0.06	0.03	138,142,180	0.0	0.0	0.0	0,0,0
105	0.03	0.06	0.03	138,142,180	0.0	0.0	0.0	0,0,0
106	0.03	0.05	0.03	137,142,179	0.0	0.0	0.0	0,0,0
107	0.02	0.14	0.02	137,160,180	0.0	0.0	0.0	0,0,0
108	0.06	0.10	0.07	140,143,182	0.0	0.0	0.0	0,0,0
109	0.03	0.11	0.04	140,143,182	0.0	0.0	0.0	0,0,0
110	0.02	0.10	0.03	140,140,182	0.0	0.0	0.0	0,0,0
111	0.02	0.07	0.03	140,142,182	0.0	0.0	0.0	0,0,0
112	0.02	0.04	0.02	140,142,180	0.0	0.0	0.0	0,0,0
113	0.01	0.03	0.01	142,142,182	0.0	0.0	0.0	0,0,0
114	0.01	0.06	0.01	139,144,181	0.0	0.0	0.0	0,0,0
115	0.06	0.11	0.07	140,144,182	0.0	0.0	0.0	0,0,0
116	0.03	0.11	0.04	140,143,182	0.0	0.0	0.0	0,0,0
117	0.02	0.09	0.02	140,144,182	0.0	0.0	0.0	0,0,0

Viale Duca Alessandro n. 11 – 43123 Parma
Cell. 335 1403156 – E mail ing.concari@gmail.com
Sito web: studioaire.it – P.IVA 02561480340

Setto	rRfck	rRfyk	rPfck	Rif. cmb	wR	wF	wP	Rif. cmb
118	0.01	0.05	0.02	140,141,182	0.0	0.0	0.0	0,0,0
119	8.81e-03	0.02	8.63e-03	140,141,182	0.0	0.0	0.0	0,0,0
120	0.01	0.04	0.01	142,142,182	0.0	0.0	0.0	0,0,0
121	0.01	0.12	0.02	137,144,181	0.0	0.0	0.0	0,0,0
122	0.05	0.14	0.06	144,140,182	0.0	0.0	0.0	0,0,0
123	0.02	0.10	0.03	139,139,182	0.0	0.0	0.0	0,0,0
124	0.02	0.09	0.03	140,143,182	0.0	0.0	0.0	0,0,0
125	0.02	0.08	0.02	140,141,182	0.0	0.0	0.0	0,0,0
126	0.02	0.06	0.01	144,137,182	0.0	0.0	0.0	0,0,0
127	0.03	0.07	0.02	144,144,182	0.0	0.0	0.0	0,0,0
128	0.03	0.17	0.03	144,144,182	0.0	0.0	0.0	0,0,0
129	0.03	0.12	0.02	144,144,182	0.0	0.0	0.0	0,0,0
130	0.03	0.13	0.02	144,143,182	0.0	0.0	0.0	0,0,0
131	0.02	0.12	0.02	144,143,182	0.0	0.0	0.0	0,0,0
132	0.02	0.11	0.02	144,143,182	0.0	0.0	0.0	0,0,0
133	0.02	0.12	0.03	140,143,182	0.0	0.0	0.0	0,0,0
134	0.03	0.12	0.03	144,143,182	0.0	0.0	0.0	0,0,0
135	0.04	0.15	0.05	140,140,182	0.0	0.0	0.0	0,0,0
136	8.26e-03	0.08	8.08e-03	144,140,182	0.0	0.0	0.0	0,0,0
137	0.02	0.27	0.02	144,143,182	0.0	0.0	0.0	0,0,0
138	0.02	0.25	0.02	140,141,182	0.0	0.0	0.0	0,0,0
139	0.03	0.08	0.03	140,141,182	0.0	0.0	0.0	0,0,0
140	0.04	0.06	0.04	144,141,182	0.0	0.0	0.0	0,0,0
141	0.06	0.04	0.06	144,141,182	0.0	0.0	0.0	0,0,0
142	0.12	0.30	0.13	144,144,182	0.0	0.0	0.0	0,0,0
143	7.24e-03	0.10	8.68e-03	139,143,181	0.0	0.0	0.0	0,0,0
144	4.36e-03	0.44	4.09e-03	138,143,182	0.0	0.0	0.0	0,0,0
145	0.03	0.08	0.03	143,142,181	0.0	0.0	0.0	0,0,0
146	0.02	0.12	0.02	139,159,181	0.0	0.0	0.0	0,0,0
147	0.02	0.05	0.02	143,159,181	0.0	0.0	0.0	0,0,0
148	0.01	0.04	0.01	143,144,181	0.0	0.0	0.0	0,0,0
149	8.76e-03	0.05	9.48e-03	143,144,181	0.0	0.0	0.0	0,0,0
150	8.40e-03	0.12	9.69e-03	151,143,181	0.0	0.0	0.0	0,0,0
151	6.39e-03	0.24	6.85e-03	139,139,181	0.0	0.0	0.0	0,0,0
152	8.42e-03	0.06	7.62e-03	143,144,181	0.0	0.0	0.0	0,0,0
153	0.01	0.07	0.01	143,140,181	0.0	0.0	0.0	0,0,0
154	0.04	0.07	0.04	143,140,181	0.0	0.0	0.0	0,0,0
155	0.05	0.14	0.05	143,143,181	0.0	0.0	0.0	0,0,0
156	0.04	0.11	0.04	143,143,181	0.0	0.0	0.0	0,0,0
157	0.02	0.18	0.02	143,144,181	0.0	0.0	0.0	0,0,0
158	0.05	0.26	0.04	143,144,181	0.0	0.0	0.0	0,0,0
159	0.03	0.09	0.03	143,143,181	0.0	0.0	0.0	0,0,0
160	0.02	0.08	0.02	143,144,181	0.0	0.0	0.0	0,0,0
161	0.02	0.07	0.02	143,144,181	0.0	0.0	0.0	0,0,0
162	0.02	0.06	0.02	143,144,181	0.0	0.0	0.0	0,0,0
163	0.03	0.07	0.03	143,143,181	0.0	0.0	0.0	0,0,0
164	0.05	0.32	0.04	143,144,181	0.0	0.0	0.0	0,0,0
165	0.04	0.19	0.03	143,144,181	0.0	0.0	0.0	0,0,0
166	0.04	0.08	0.04	143,143,181	0.0	0.0	0.0	0,0,0
167	0.03	0.02	0.03	143,143,181	0.0	0.0	0.0	0,0,0
168	0.03	0.02	0.03	144,144,182	0.0	0.0	0.0	0,0,0
169	0.03	0.02	0.03	144,160,182	0.0	0.0	0.0	0,0,0
170	0.03	0.05	0.04	142,151,182	0.0	0.0	0.0	0,0,0
171	0.02	0.26	0.02	143,144,181	0.0	0.0	0.0	0,0,0
172	0.02	0.11	0.02	143,144,181	0.0	0.0	0.0	0,0,0
173	0.01	0.02	0.01	143,158,181	0.0	0.0	0.0	0,0,0
174	0.02	0.01	0.02	143,143,181	0.0	0.0	0.0	0,0,0
175	0.02	0.01	0.02	143,143,181	0.0	0.0	0.0	0,0,0
176	0.02	0.01	0.02	143,143,181	0.0	0.0	0.0	0,0,0
177	0.02	0.02	0.03	143,159,181	0.0	0.0	0.0	0,0,0
178	0.01	0.19	9.47e-03	143,144,181	0.0	0.0	0.0	0,0,0
179	0.01	0.11	9.45e-03	143,144,181	0.0	0.0	0.0	0,0,0
180	9.34e-03	0.06	7.95e-03	144,144,182	0.0	0.0	0.0	0,0,0
181	0.01	0.03	0.01	144,138,181	0.0	0.0	0.0	0,0,0
182	0.02	0.01	0.02	143,138,181	0.0	0.0	0.0	0,0,0
183	0.02	0.01	0.02	143,143,181	0.0	0.0	0.0	0,0,0
184	0.02	0.02	0.03	143,159,181	0.0	0.0	0.0	0,0,0
185	0.02	0.15	0.02	143,143,181	0.0	0.0	0.0	0,0,0
186	0.02	0.12	0.02	143,143,181	0.0	0.0	0.0	0,0,0
187	0.02	0.10	0.02	143,144,181	0.0	0.0	0.0	0,0,0
188	0.01	0.07	0.01	143,144,181	0.0	0.0	0.0	0,0,0
189	0.01	0.05	0.01	143,142,181	0.0	0.0	0.0	0,0,0
190	0.02	0.04	0.02	143,138,181	0.0	0.0	0.0	0,0,0
191	0.03	0.04	0.03	143,142,181	0.0	0.0	0.0	0,0,0
192	0.05	0.14	0.05	143,143,181	0.0	0.0	0.0	0,0,0
193	0.04	0.12	0.04	143,143,181	0.0	0.0	0.0	0,0,0
194	0.03	0.11	0.03	143,144,181	0.0	0.0	0.0	0,0,0
195	0.02	0.09	0.02	143,144,181	0.0	0.0	0.0	0,0,0
196	0.02	0.08	0.02	143,144,181	0.0	0.0	0.0	0,0,0
197	0.02	0.07	0.02	143,144,181	0.0	0.0	0.0	0,0,0
198	0.02	0.08	0.02	143,144,181	0.0	0.0	0.0	0,0,0
199	0.04	0.17	0.04	149,152,182	0.0	0.0	0.0	0,0,0
200	0.06	0.18	0.06	138,152,180	0.0	0.0	0.0	0,0,0
201	0.07	0.16	0.07	149,150,179	0.0	0.0	0.0	0,0,0
202	0.07	0.15	0.07	149,149,179	0.0	0.0	0.0	0,0,0
203	0.06	0.14	0.06	149,149,179	0.0	0.0	0.0	0,0,0
204	0.06	0.12	0.06	138,142,180	0.0	0.0	0.0	0,0,0
205	0.11	0.16	0.12	140,138,182	0.0	0.0	0.0	0,0,0
206	0.05	0.14	0.05	149,160,179	0.0	0.0	0.0	0,0,0
207	0.06	0.10	0.06	149,149,179	0.0	0.0	0.0	0,0,0
208	0.06	0.10	0.06	149,159,179	0.0	0.0	0.0	0,0,0
209	0.07	0.12	0.07	138,138,180	0.0	0.0	0.0	0,0,0
210	0.07	0.12	0.07	138,138,180	0.0	0.0	0.0	0,0,0

Viale Duca Alessandro n. 11 – 43123 Parma
Cell. 335 1403156 – E mail ing.concari@gmail.com
Sito web: studioaire.it – P.IVA 02561480340

Setto	rRfck	rRfyk	rPfck	Rif. cmb	wR	wF	wP	Rif. cmb
211	0.06	0.12	0.06	138,138,180	0.0	0.0	0.0	0,0,0
212	0.19	0.29	0.22	140,140,182	0.0	0.0	0.0	0,0,0
213	0.05	0.10	0.05	149,159,179	0.0	0.0	0.0	0,0,0
214	0.07	0.12	0.06	149,149,179	0.0	0.0	0.0	0,0,0
215	0.08	0.12	0.08	150,149,180	0.0	0.0	0.0	0,0,0
216	0.08	0.13	0.08	138,138,180	0.0	0.0	0.0	0,0,0
217	0.08	0.13	0.08	138,138,180	0.0	0.0	0.0	0,0,0
218	0.06	0.10	0.06	138,139,180	0.0	0.0	0.0	0,0,0
219	0.24	0.36	0.26	140,138,182	0.0	0.0	0.0	0,0,0
220	0.05	0.10	0.04	149,159,179	0.0	0.0	0.0	0,0,0
221	0.07	0.12	0.07	149,149,179	0.0	0.0	0.0	0,0,0
222	0.09	0.13	0.09	150,138,180	0.0	0.0	0.0	0,0,0
223	0.09	0.13	0.09	150,138,180	0.0	0.0	0.0	0,0,0
224	0.08	0.13	0.09	150,138,180	0.0	0.0	0.0	0,0,0
225	0.06	0.10	0.06	140,141,182	0.0	0.0	0.0	0,0,0
226	0.25	0.39	0.27	139,138,182	0.0	0.0	0.0	0,0,0
227	0.04	0.10	0.04	149,159,179	0.0	0.0	0.0	0,0,0
228	0.07	0.12	0.07	150,149,180	0.0	0.0	0.0	0,0,0
229	0.09	0.14	0.09	150,138,180	0.0	0.0	0.0	0,0,0
230	0.09	0.13	0.09	150,137,180	0.0	0.0	0.0	0,0,0
231	0.09	0.12	0.09	150,138,180	0.0	0.0	0.0	0,0,0
232	0.06	0.08	0.06	139,138,181	0.0	0.0	0.0	0,0,0
233	0.25	0.40	0.27	139,138,181	0.0	0.0	0.0	0,0,0
234	0.04	0.09	0.04	150,159,180	0.0	0.0	0.0	0,0,0
235	0.07	0.11	0.07	150,149,180	0.0	0.0	0.0	0,0,0
236	0.09	0.15	0.09	150,137,180	0.0	0.0	0.0	0,0,0
237	0.09	0.14	0.09	150,138,180	0.0	0.0	0.0	0,0,0
238	0.09	0.14	0.09	150,138,180	0.0	0.0	0.0	0,0,0
239	0.06	0.09	0.05	139,142,180	0.0	0.0	0.0	0,0,0
240	0.24	0.40	0.26	139,138,181	0.0	0.0	0.0	0,0,0
241	0.05	0.08	0.04	150,158,180	0.0	0.0	0.0	0,0,0
242	0.07	0.11	0.06	150,150,180	0.0	0.0	0.0	0,0,0
243	0.09	0.15	0.09	150,137,180	0.0	0.0	0.0	0,0,0
244	0.09	0.15	0.09	150,138,180	0.0	0.0	0.0	0,0,0
245	0.09	0.15	0.09	150,138,180	0.0	0.0	0.0	0,0,0
246	0.06	0.12	0.07	138,142,180	0.0	0.0	0.0	0,0,0
247	0.23	0.38	0.25	139,138,181	0.0	0.0	0.0	0,0,0
248	0.05	0.10	0.04	150,159,180	0.0	0.0	0.0	0,0,0
249	0.06	0.10	0.06	150,150,180	0.0	0.0	0.0	0,0,0
250	0.07	0.14	0.08	150,138,180	0.0	0.0	0.0	0,0,0
251	0.08	0.16	0.09	138,138,180	0.0	0.0	0.0	0,0,0
252	0.08	0.16	0.09	138,138,180	0.0	0.0	0.0	0,0,0
253	0.07	0.13	0.07	138,142,180	0.0	0.0	0.0	0,0,0
254	0.20	0.33	0.22	139,138,181	0.0	0.0	0.0	0,0,0
255	0.05	0.12	0.04	150,159,180	0.0	0.0	0.0	0,0,0
256	0.05	0.09	0.05	150,158,180	0.0	0.0	0.0	0,0,0
257	0.05	0.11	0.05	150,142,180	0.0	0.0	0.0	0,0,0
258	0.07	0.15	0.07	137,142,180	0.0	0.0	0.0	0,0,0
259	0.07	0.14	0.07	138,142,180	0.0	0.0	0.0	0,0,0
260	0.07	0.14	0.07	138,142,180	0.0	0.0	0.0	0,0,0
261	0.16	0.26	0.17	139,138,181	0.0	0.0	0.0	0,0,0
262	0.05	0.18	0.03	138,159,180	0.0	0.0	0.0	0,0,0
263	0.07	0.19	0.07	137,151,180	0.0	0.0	0.0	0,0,0
264	0.09	0.19	0.09	138,149,180	0.0	0.0	0.0	0,0,0
265	0.09	0.18	0.09	138,138,180	0.0	0.0	0.0	0,0,0
266	0.09	0.17	0.09	150,150,180	0.0	0.0	0.0	0,0,0
267	0.06	0.13	0.07	150,142,180	0.0	0.0	0.0	0,0,0
268	0.09	0.14	0.09	139,138,181	0.0	0.0	0.0	0,0,0
269	0.04	0.19	0.03	138,159,181	0.0	0.0	0.0	0,0,0
270	0.07	0.14	0.07	150,151,179	0.0	0.0	0.0	0,0,0
271	0.09	0.14	0.09	138,138,180	0.0	0.0	0.0	0,0,0
272	0.09	0.15	0.09	138,138,180	0.0	0.0	0.0	0,0,0
273	0.08	0.14	0.08	150,138,180	0.0	0.0	0.0	0,0,0
274	0.06	0.09	0.06	150,138,180	0.0	0.0	0.0	0,0,0
275	0.02	0.08	0.02	150,138,179	0.0	0.0	0.0	0,0,0
276	0.03	0.14	0.03	143,159,181	0.0	0.0	0.0	0,0,0
277	0.03	0.05	0.03	137,142,180	0.0	0.0	0.0	0,0,0
278	0.03	0.05	0.03	139,144,181	0.0	0.0	0.0	0,0,0
279	0.03	0.07	0.03	139,144,181	0.0	0.0	0.0	0,0,0
280	0.03	0.08	0.03	139,144,181	0.0	0.0	0.0	0,0,0
281	0.02	0.08	0.03	151,140,181	0.0	0.0	0.0	0,0,0
282	0.02	0.09	0.02	139,142,181	0.0	0.0	0.0	0,0,0
283	0.07	0.20	0.07	143,159,181	0.0	0.0	0.0	0,0,0
284	0.05	0.09	0.04	143,143,181	0.0	0.0	0.0	0,0,0
285	0.03	0.05	0.03	143,143,181	0.0	0.0	0.0	0,0,0
286	0.01	0.04	0.01	143,144,181	0.0	0.0	0.0	0,0,0
287	9.16e-03	0.05	8.65e-03	137,144,179	0.0	0.0	0.0	0,0,0
288	0.02	0.08	0.01	142,142,181	0.0	0.0	0.0	0,0,0
289	0.03	0.12	0.04	143,143,181	0.0	0.0	0.0	0,0,0
290	0.04	0.09	0.04	143,159,181	0.0	0.0	0.0	0,0,0
291	0.04	0.05	0.04	143,142,181	0.0	0.0	0.0	0,0,0
292	0.03	0.02	0.03	144,144,182	0.0	0.0	0.0	0,0,0
293	0.04	0.02	0.04	144,144,182	0.0	0.0	0.0	0,0,0
294	0.04	0.03	0.05	140,140,182	0.0	0.0	0.0	0,0,0
295	0.08	0.07	0.09	140,140,182	0.0	0.0	0.0	0,0,0
296	0.01	0.13	0.01	142,142,181	0.0	0.0	0.0	0,0,0
Setto	**rRfck**	**rRfyk**	**rPfck**		**wR**	**wF**	**wP**	
	0.25	0.44	0.27		0.0	0.0	0.0	

Viale Duca Alessandro n. 11 – 43123 Parma
Cell. 335 1403156 – E mail ing.concari@gmail.com
Sito web: studioaire.it – P.IVA 02561480340

Guscio	rRfck	rRfyk	rPfck	Rif. cmb	wR	wF	wP	Rif. cmb
					mm	mm	mm	
34	0.09	0.21	0.10	140,140,182	0.0	0.0	0.0	0,0,0
35	0.07	0.20	0.08	140,144,182	0.0	0.0	0.0	0,0,0
36	0.07	0.24	0.08	140,140,182	0.0	0.0	0.0	0,0,0
37	0.08	0.23	0.09	140,140,182	0.0	0.0	0.0	0,0,0
38	0.07	0.21	0.09	152,140,182	0.0	0.0	0.0	0,0,0
39	0.11	0.31	0.11	144,144,182	0.0	0.0	0.0	0,0,0
40	0.09	0.26	0.10	140,140,182	0.0	0.0	0.0	0,0,0
41	0.09	0.24	0.10	140,140,182	0.0	0.0	0.0	0,0,0
42	0.08	0.22	0.10	140,140,182	0.0	0.0	0.0	0,0,0
43	0.08	0.15	0.09	140,140,182	0.0	0.0	0.0	0,0,0
44	0.13	0.28	0.14	144,144,182	0.0	0.0	0.0	0,0,0
45	0.11	0.24	0.12	144,140,182	0.0	0.0	0.0	0,0,0
46	0.10	0.23	0.11	140,140,182	0.0	0.0	0.0	0,0,0
47	0.08	0.20	0.10	140,140,182	0.0	0.0	0.0	0,0,0
48	0.10	0.18	0.11	140,140,182	0.0	0.0	0.0	0,0,0
49	0.12	0.24	0.13	144,140,182	0.0	0.0	0.0	0,0,0
50	0.11	0.22	0.11	144,140,182	0.0	0.0	0.0	0,0,0
51	0.09	0.20	0.11	140,140,182	0.0	0.0	0.0	0,0,0
52	0.06	0.16	0.08	140,140,182	0.0	0.0	0.0	0,0,0
53	0.10	0.19	0.11	139,139,181	0.0	0.0	0.0	0,0,0
54	0.11	0.17	0.10	144,143,182	0.0	0.0	0.0	0,0,0
55	0.08	0.16	0.09	144,139,182	0.0	0.0	0.0	0,0,0
56	0.07	0.14	0.09	139,143,182	0.0	0.0	0.0	0,0,0
57	0.05	0.11	0.06	152,152,182	0.0	0.0	0.0	0,0,0
58	0.10	0.20	0.11	140,140,182	0.0	0.0	0.0	0,0,0
59	0.09	0.24	0.09	144,144,182	0.0	0.0	0.0	0,0,0
60	0.08	0.20	0.08	144,144,182	0.0	0.0	0.0	0,0,0
61	0.07	0.15	0.08	143,143,181	0.0	0.0	0.0	0,0,0
62	0.03	0.07	0.02	143,142,182	0.0	0.0	0.0	0,0,0
63	0.10	0.20	0.11	139,139,181	0.0	0.0	0.0	0,0,0
64	0.08	0.23	0.08	143,144,182	0.0	0.0	0.0	0,0,0
65	0.08	0.20	0.08	144,144,182	0.0	0.0	0.0	0,0,0
66	0.07	0.15	0.08	143,143,181	0.0	0.0	0.0	0,0,0
67	0.03	0.07	0.02	142,142,180	0.0	0.0	0.0	0,0,0
68	0.09	0.18	0.10	139,139,181	0.0	0.0	0.0	0,0,0
69	0.08	0.21	0.08	143,143,181	0.0	0.0	0.0	0,0,0
70	0.08	0.19	0.08	143,143,181	0.0	0.0	0.0	0,0,0
71	0.07	0.16	0.08	143,143,181	0.0	0.0	0.0	0,0,0
72	0.03	0.06	0.01	142,142,181	0.0	0.0	0.0	0,0,0
73	0.08	0.16	0.09	139,139,181	0.0	0.0	0.0	0,0,0
74	0.08	0.18	0.08	143,143,181	0.0	0.0	0.0	0,0,0
75	0.07	0.16	0.07	143,143,181	0.0	0.0	0.0	0,0,0
76	0.06	0.15	0.07	143,143,181	0.0	0.0	0.0	0,0,0
77	0.02	0.05	0.02	142,151,181	0.0	0.0	0.0	0,0,0
78	0.06	0.12	0.07	139,143,181	0.0	0.0	0.0	0,0,0
79	0.07	0.13	0.07	143,143,181	0.0	0.0	0.0	0,0,0
80	0.05	0.15	0.05	143,143,181	0.0	0.0	0.0	0,0,0
81	0.05	0.15	0.05	143,143,181	0.0	0.0	0.0	0,0,0
82	0.03	0.07	0.02	143,142,181	0.0	0.0	0.0	0,0,0
83	0.03	0.08	0.04	139,151,181	0.0	0.0	0.0	0,0,0
Guscio	**rRfck**	**rRfyk**	**rPfck**		**wR**	**wF**	**wP**	
	0.13	0.31	0.14		0.0	0.0	0.0	

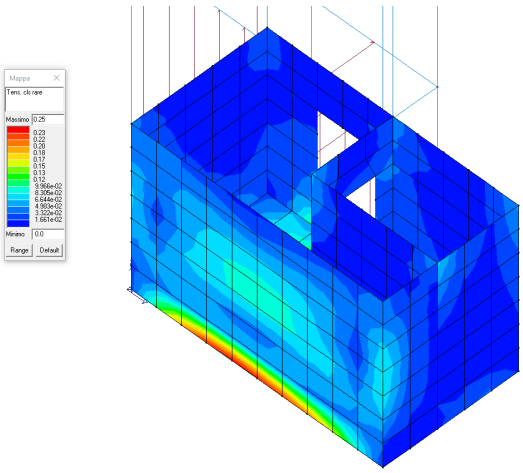

Verifica SLE – tensioni cls in cond.rare

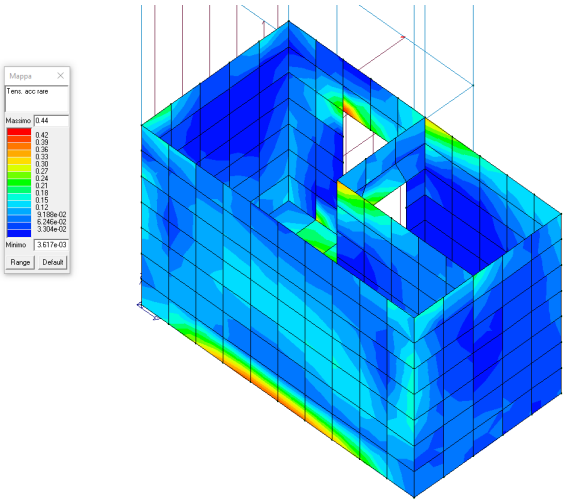

Verifica SLE – tensioni acciaio in cond.rare

Viale Duca Alessandro n. 11 – 43123 Parma
Cell. 335 1403156 – E mail ing.concari@gmail.com
Sito web: studioaire.it – P.IVA 02561480340

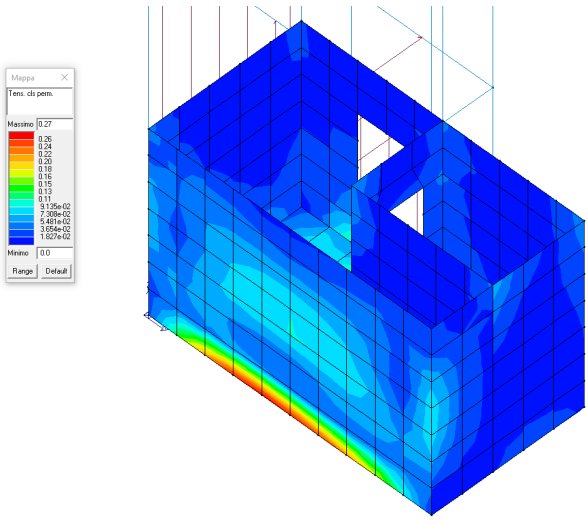

Verifica SLE – tensioni cls in cond.perm.

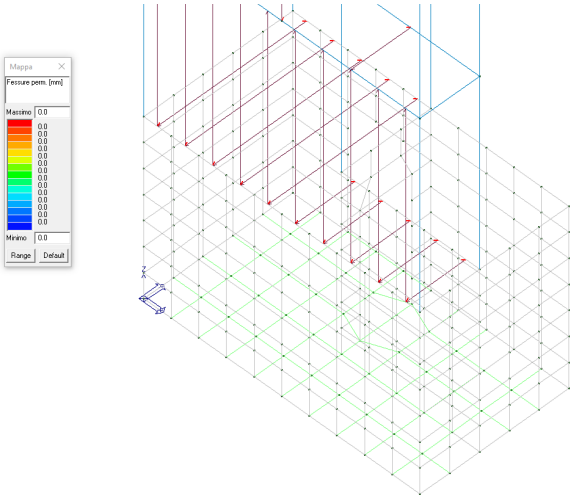

Verifica SLE – fessurazioni nulle in cond.rare/freq./perm.

MODELLO LOCALE TECNICO

Trave Rif. cmb	Pos.	rRfck	rRfyk	rPfck	Rif. cmb	wR	wF	wP	Rif. cmb	dR	dF	dP
	cm					mm	mm	mm		cm	cm	cm
1	0.0	6.80e-03	5.04e-03	6.15e-03	96,96,116	0.0	0.0	0.0	0,0,0	-0.03	-0.03	-0.03
90,111,114												
	24.4	0.02	0.03	0.02	95,93,115	0.0	0.0	0.0	0,0,0			
	48.9	7.63e-03	6.12e-03	7.31e-03	96,90,116	0.0	0.0	0.0	0,0,0			
2	0.0	6.92e-03	6.31e-03	6.42e-03	96,96,116	0.0	0.0	0.0	0,0,0	-0.03	-0.03	-0.02
90,111,114												
	24.4	0.03	0.03	0.03	96,93,116	0.0	0.0	0.0	0,0,0			
	48.9	6.00e-03	5.64e-03	5.34e-03	96,96,116	0.0	0.0	0.0	0,0,0			
3	0.0	5.87e-03	0.01	4.97e-03	96,94,116	0.0	0.0	0.0	0,0,0	-0.03	-0.03	-0.03
90,111,114												
	24.4	0.03	0.05	0.02	94,94,114	0.0	0.0	0.0	0,0,0			
	48.9	3.39e-03	0.01	4.15e-03	90,90,114	0.0	0.0	0.0	0,0,0			
4	0.0	5.26e-03	4.88e-03	4.83e-03	96,96,116	0.0	0.0	0.0	0,0,0	-0.03	-0.02	-0.02
90,111,114												
	24.4	0.02	0.02	0.02	94,93,114	0.0	0.0	0.0	0,0,0			
	48.9	0.01	0.01	0.01	96,96,116	0.0	0.0	0.0	0,0,0			
5	0.0	0.02	0.02	0.02	96,96,116	0.0	0.0	0.0	0,0,0	0.19	0.17	0.17
96,112,116												
	25.0	0.01	0.01	0.01	96,96,116	0.0	0.0	0.0	0,0,0			
	50.0	1.68e-03	1.61e-03	1.84e-03	94,94,114	0.0	0.0	0.0	0,0,0			
6	0.0	0.02	0.04	0.02	96,96,116	0.0	0.0	0.0	0,0,0	-0.03	-0.03	-0.03
96,112,116												
	24.4	0.02	0.03	0.01	93,93,113	0.0	0.0	0.0	0,0,0			
	48.9	3.42e-03	0.01	2.36e-03	94,96,114	0.0	0.0	0.0	0,0,0			
7	0.0	0.01	0.02	0.01	94,96,114	0.0	0.0	0.0	0,0,0	0.19	0.17	0.17
96,112,116												
	25.0	7.73e-03	9.98e-03	8.08e-03	95,96,115	0.0	0.0	0.0	0,0,0			
	50.0	1.88e-03	2.32e-03	2.27e-03	90,92,114	0.0	0.0	0.0	0,0,0			
8	0.0	0.02	0.05	0.02	96,96,116	0.0	0.0	0.0	0,0,0	-0.03	-0.03	-0.03
96,112,116												
	24.4	0.01	0.03	7.30e-03	93,93,113	0.0	0.0	0.0	0,0,0			
	48.9	1.56e-03	0.02	0.0	93,96,0	0.0	0.0	0.0	0,0,0			
9	0.0	0.0	8.03e-03	0.0	0,95,0	0.0	0.0	0.0	0,0,0	0.18	0.17	0.17
96,112,116												
	25.0	1.36e-04	8.33e-03	0.0	90,95,0	0.0	0.0	0.0	0,0,0			
	50.0	0.0	8.36e-03	0.0	0,95,0	0.0	0.0	0.0	0,0,0			
10	0.0	8.60e-03	7.82e-03	8.72e-03	96,96,116	0.0	0.0	0.0	0,0,0	-0.03	-0.03	-0.03
96,112,116												
	24.4	0.03	0.02	0.02	96,93,116	0.0	0.0	0.0	0,0,0			
	48.9	8.35e-03	7.64e-03	8.11e-03	96,96,116	0.0	0.0	0.0	0,0,0			
11	0.0	0.0	0.03	0.0	0,92,0	0.0	0.0	0.0	0,0,0	0.19	0.17	0.17
96,108,116												
	25.0	0.0	0.03	0.0	0,92,0	0.0	0.0	0.0	0,0,0			
	50.0	0.0	0.03	0.0	0,92,0	0.0	0.0	0.0	0,0,0			
12	0.0	5.69e-03	4.43e-03	5.24e-03	96,95,116	0.0	0.0	0.0	0,0,0	-0.03	-0.03	-0.03
96,112,116												
	24.4	0.03	0.03	0.02	95,94,115	0.0	0.0	0.0	0,0,0			
	48.9	5.40e-03	4.35e-03	4.49e-03	95,95,115	0.0	0.0	0.0	0,0,0			
13	0.0	0.0	0.02	0.0	0,95,0	0.0	0.0	0.0	0,0,0	0.18	0.17	0.17
94,111,114												
	25.0	0.0	0.02	0.0	0,95,0	0.0	0.0	0.0	0,0,0			
	50.0	0.0	0.02	0.0	0,95,0	0.0	0.0	0.0	0,0,0			
14	0.0	0.01	0.01	0.01	96,96,116	0.0	0.0	0.0	0,0,0	-0.03	-0.03	-0.03
96,112,116												

Viale Duca Alessandro n. 11 – 43123 Parma
Cell. 335 1403156 – E mail ing.concari@gmail.com
Sito web: studioaire.it – P.IVA 02561480340

	24.4	0.03	0.02	0.03	96,96,116	0.0	0.0	0.0	0,0,0			
	48.9	0.01	0.01	0.01	96,96,116	0.0	0.0	0.0	0,0,0			
15	0.0	0.0	0.04	0.0	0,92,0	0.0	0.0	0.0	0,0,0	0.18	0.17	0.17
96,108,116												
	25.0	0.0	0.04	0.0	0,92,0	0.0	0.0	0.0	0,0,0			
	50.0	0.0	0.04	0.0	0,92,0	0.0	0.0	0.0	0,0,0			
16	0.0	6.39e-03	5.58e-03	5.62e-03	95,95,115	0.0	0.0	0.0	0,0,0	-0.03	-0.03	-0.03
96,112,116												
	24.4	0.03	0.03	0.02	95,94,115	0.0	0.0	0.0	0,0,0			
	48.9	6.66e-03	5.77e-03	5.82e-03	95,95,115	0.0	0.0	0.0	0,0,0			
17	0.0	0.0	0.03	0.0	0,95,0	0.0	0.0	0.0	0,0,0	0.07	0.17	0.17
94,111,114												
	25.0	0.0	0.03	0.0	0,95,0	0.0	0.0	0.0	0,0,0			
	50.0	0.0	0.03	0.0	0,95,0	0.0	0.0	0.0	0,0,0			
18	0.0	0.01	0.01	0.01	96,96,116	0.0	0.0	0.0	0,0,0	-0.03	-0.03	-0.03
96,112,116												
	24.4	0.03	0.02	0.03	96,96,116	0.0	0.0	0.0	0,0,0			
	48.9	0.01	0.01	0.01	96,96,116	0.0	0.0	0.0	0,0,0			
19	0.0	0.0	0.05	0.0	0,96,0	0.0	0.0	0.0	0,0,0	0.18	0.17	0.16
96,108,116												
	25.0	0.0	0.05	0.0	0,96,0	0.0	0.0	0.0	0,0,0			
	50.0	0.0	0.05	0.0	0,96,0	0.0	0.0	0.0	0,0,0			
20	0.0	6.38e-03	5.46e-03	5.33e-03	95,95,115	0.0	0.0	0.0	0,0,0	-0.03	-0.03	-0.03
96,112,116												
	24.4	0.03	0.03	0.02	95,94,115	0.0	0.0	0.0	0,0,0			
	48.9	6.69e-03	5.67e-03	5.67e-03	95,95,115	0.0	0.0	0.0	0,0,0			
21	0.0	0.0	0.03	0.0	0,95,0	0.0	0.0	0.0	0,0,0	0.19	0.17	0.16
94,111,114												
	25.0	0.0	0.03	0.0	0,95,0	0.0	0.0	0.0	0,0,0			
	50.0	0.0	0.03	0.0	0,95,0	0.0	0.0	0.0	0,0,0			
22	0.0	0.01	0.01	0.01	96,96,116	0.0	0.0	0.0	0,0,0	-0.03	-0.03	-0.03
96,112,116												
	24.4	0.03	0.02	0.03	96,96,116	0.0	0.0	0.0	0,0,0			
	48.9	0.01	0.01	0.01	96,96,116	0.0	0.0	0.0	0,0,0			
23	0.0	0.0	0.06	0.0	0,96,0	0.0	0.0	0.0	0,0,0	0.18	0.17	0.16
96,108,116												
	25.0	0.0	0.06	0.0	0,96,0	0.0	0.0	0.0	0,0,0			
	50.0	0.0	0.06	0.0	0,96,0	0.0	0.0	0.0	0,0,0			
24	0.0	6.07e-03	5.99e-03	4.95e-03	95,90,115	0.0	0.0	0.0	0,0,0	-0.03	-0.03	-0.03
96,112,116												
	24.4	0.02	0.03	0.02	95,94,115	0.0	0.0	0.0	0,0,0			
	48.9	6.41e-03	6.50e-03	5.34e-03	95,90,115	0.0	0.0	0.0	0,0,0			
25	0.0	0.0	0.04	0.0	0,95,0	0.0	0.0	0.0	0,0,0	0.19	0.17	0.16
94,111,114												
	25.0	0.0	0.03	0.0	0,95,0	0.0	0.0	0.0	0,0,0			
	50.0	0.0	0.04	0.0	0,95,0	0.0	0.0	0.0	0,0,0			
26	0.0	0.01	0.01	0.01	96,96,116	0.0	0.0	0.0	0,0,0	-0.03	-0.03	-0.03
96,112,116												
	24.4	0.03	0.02	0.03	96,96,116	0.0	0.0	0.0	0,0,0			
	48.9	0.01	0.01	0.01	96,96,116	0.0	0.0	0.0	0,0,0			
27	0.0	0.0	0.11	0.0	0,96,0	0.0	0.0	0.0	0,0,0	0.18	0.17	0.16
96,108,116												
	25.0	0.0	0.12	0.0	0,96,0	0.0	0.0	0.0	0,0,0			
	50.0	0.0	0.12	0.0	0,96,0	0.0	0.0	0.0	0,0,0			
28	0.0	5.71e-03	0.01	3.86e-03	95,90,115	0.0	0.0	0.0	0,0,0	-0.03	-0.03	-0.03
96,112,116												
	24.4	0.02	0.04	0.02	95,94,115	0.0	0.0	0.0	0,0,0			
	48.9	5.90e-03	0.01	4.06e-03	95,90,115	0.0	0.0	0.0	0,0,0			
29	0.0	0.0	0.04	0.0	0,95,0	0.0	0.0	0.0	0,0,0	0.07	0.17	0.16
94,111,114												
	25.0	0.0	0.03	0.0	0,95,0	0.0	0.0	0.0	0,0,0			
	50.0	0.0	0.04	0.0	0,95,0	0.0	0.0	0.0	0,0,0			
30	0.0	0.01	0.01	0.01	96,96,116	0.0	0.0	0.0	0,0,0	-0.03	-0.03	-0.03
96,112,116												
	24.4	0.03	0.02	0.03	96,96,116	0.0	0.0	0.0	0,0,0			
	48.9	0.01	0.01	0.01	96,96,116	0.0	0.0	0.0	0,0,0			
31	0.0	0.0	0.13	0.0	0,96,0	0.0	0.0	0.0	0,0,0	0.18	0.16	0.16
94,111,114												
	25.0	0.0	0.13	0.0	0,96,0	0.0	0.0	0.0	0,0,0			
	50.0	0.0	0.13	0.0	0,96,0	0.0	0.0	0.0	0,0,0			
32	0.0	6.35e-03	7.81e-03	5.46e-03	95,94,115	0.0	0.0	0.0	0,0,0	-0.03	-0.03	-0.03
96,112,116												
	24.4	0.02	0.04	0.02	95,94,115	0.0	0.0	0.0	0,0,0			
	48.9	6.37e-03	7.79e-03	5.44e-03	95,94,115	0.0	0.0	0.0	0,0,0			
33	0.0	0.0	0.04	0.0	0,95,0	0.0	0.0	0.0	0,0,0	0.19	0.17	0.16
94,111,114												
	25.0	0.0	0.04	0.0	0,95,0	0.0	0.0	0.0	0,0,0			
	50.0	0.0	0.04	0.0	0,95,0	0.0	0.0	0.0	0,0,0			
34	0.0	0.01	0.01	0.02	96,96,116	0.0	0.0	0.0	0,0,0	-0.03	-0.03	-0.03
96,112,116												
	24.4	0.03	0.02	0.03	96,96,116	0.0	0.0	0.0	0,0,0			
	48.9	0.01	0.01	0.02	96,96,116	0.0	0.0	0.0	0,0,0			
35	0.0	0.0	0.14	0.0	0,96,0	0.0	0.0	0.0	0,0,0	0.17	0.16	0.16
94,111,114												
	25.0	0.0	0.13	0.0	0,96,0	0.0	0.0	0.0	0,0,0			
	50.0	0.0	0.12	0.0	0,96,0	0.0	0.0	0.0	0,0,0			
36	0.0	6.59e-03	5.03e-03	5.75e-03	95,95,115	0.0	0.0	0.0	0,0,0	-0.03	-0.03	-0.03
96,112,116												
	24.4	0.02	0.03	0.02	95,94,115	0.0	0.0	0.0	0,0,0			
	48.9	6.73e-03	5.12e-03	5.95e-03	95,95,115	0.0	0.0	0.0	0,0,0			
37	0.0	0.0	0.03	0.0	0,95,0	0.0	0.0	0.0	0,0,0	0.18	0.17	0.16
94,111,114												
	25.0	0.0	0.03	0.0	0,95,0	0.0	0.0	0.0	0,0,0			
	50.0	0.0	0.03	0.0	0,95,0	0.0	0.0	0.0	0,0,0			
38	0.0	0.01	0.01	0.01	96,96,116	0.0	0.0	0.0	0,0,0	-0.03	-0.03	-0.03
96,112,116												
	24.4	0.03	0.02	0.03	96,96,116	0.0	0.0	0.0	0,0,0			
	48.9	0.01	0.01	0.02	96,96,116	0.0	0.0	0.0	0,0,0			

Viale Duca Alessandro n. 11 – 43123 Parma
Cell. 335 1403156 – E mail ing.concari@gmail.com
Sito web: studioaire.it – P.IVA 02561480340

39	0.0	0.0	0.07	0.0	0,95,0	0.0	0.0	0.0	0,0,0	0.17	0.16	0.16
94,111,114												
	25.0	0.0	0.07	0.0	0,95,0	0.0	0.0	0.0	0,0,0			
	50.0	0.0	0.07	0.0	0,95,0	0.0	0.0	0.0	0,0,0			
40	0.0	4.84e-03	0.02	1.95e-03	95,90,115	0.0	0.0	0.0	0,0,0	-0.03	-0.03	-0.03
96,112,116												
	24.4	0.02	0.05	0.02	95,94,115	0.0	0.0	0.0	0,0,0			
	48.9	5.00e-03	0.02	2.22e-03	95,90,115	0.0	0.0	0.0	0,0,0			
41	0.0	0.0	0.03	0.0	0,95,0	0.0	0.0	0.0	0,0,0	0.18	0.17	0.16
94,111,114												
	25.0	0.0	0.03	0.0	0,95,0	0.0	0.0	0.0	0,0,0			
	50.0	0.0	0.03	0.0	0,95,0	0.0	0.0	0.0	0,0,0			
42	0.0	0.01	9.75e-03	0.01	96,96,116	0.0	0.0	0.0	0,0,0	-0.03	-0.03	-0.03
96,112,116												
	24.4	0.03	0.02	0.03	96,96,116	0.0	0.0	0.0	0,0,0			
	48.9	0.01	9.79e-03	0.01	96,96,116	0.0	0.0	0.0	0,0,0			
43	0.0	7.67e-03	8.83e-03	9.53e-03	90,95,114	0.0	0.0	0.0	0,0,0	0.17	0.16	0.16
94,111,114												
	25.0	0.01	0.02	0.02	90,95,114	0.0	0.0	0.0	0,0,0			
	50.0	0.01	0.02	0.02	94,95,114	0.0	0.0	0.0	0,0,0			
44	0.0	4.64e-03	0.02	1.29e-03	95,90,115	0.0	0.0	0.0	0,0,0	-0.03	-0.03	-0.03
96,112,116												
	24.4	0.02	0.05	0.02	95,94,115	0.0	0.0	0.0	0,0,0			
	48.9	4.66e-03	0.02	1.33e-03	95,90,115	0.0	0.0	0.0	0,0,0			
45	0.0	0.0	0.02	0.0	0,95,0	0.0	0.0	0.0	0,0,0	0.18	0.17	0.16
94,111,114												
	25.0	0.0	0.02	0.0	0,95,0	0.0	0.0	0.0	0,0,0			
	50.0	0.0	0.02	0.0	0,95,0	0.0	0.0	0.0	0,0,0			
46	0.0	0.01	0.01	0.01	96,96,116	0.0	0.0	0.0	0,0,0	-0.03	-0.03	-0.03
94,111,114												
	24.4	0.03	0.02	0.03	96,96,116	0.0	0.0	0.0	0,0,0			
	48.9	0.01	0.01	0.01	96,96,116	0.0	0.0	0.0	0,0,0			
47	0.0	0.02	0.02	0.03	94,94,114	0.0	0.0	0.0	0,0,0	0.18	0.16	0.16
94,111,114												
	25.0	0.02	0.02	0.02	94,94,114	0.0	0.0	0.0	0,0,0			
	50.0	0.02	0.02	0.02	94,94,114	0.0	0.0	0.0	0,0,0			
48	0.0	4.34e-03	0.02	3.69e-04	95,90,115	0.0	0.0	0.0	0,0,0	-0.03	-0.03	-0.03
94,111,114												
	24.4	0.02	0.05	0.02	95,94,115	0.0	0.0	0.0	0,0,0			
	48.9	4.28e-03	0.02	2.07e-04	95,90,115	0.0	0.0	0.0	0,0,0			
49	0.0	0.0	0.02	0.0	0,96,0	0.0	0.0	0.0	0,0,0	0.18	0.17	0.16
94,111,114												
	25.0	0.0	0.02	0.0	0,95,0	0.0	0.0	0.0	0,0,0			
	50.0	0.0	0.03	0.0	0,95,0	0.0	0.0	0.0	0,0,0			
50	0.0	0.01	0.01	0.01	96,96,116	0.0	0.0	0.0	0,0,0	-0.03	-0.03	-0.03
94,111,114												
	24.4	0.03	0.02	0.03	96,96,116	0.0	0.0	0.0	0,0,0			
	48.9	0.01	0.01	0.01	96,96,116	0.0	0.0	0.0	0,0,0			
51	0.0	0.01	9.73e-03	0.01	94,94,114	0.0	0.0	0.0	0,0,0	0.18	0.16	0.16
94,111,114												
	25.0	7.21e-03	7.01e-03	8.99e-03	90,90,114	0.0	0.0	0.0	0,0,0			
	50.0	0.02	0.01	0.02	90,90,114	0.0	0.0	0.0	0,0,0			
52	0.0	5.63e-03	0.01	3.79e-03	95,90,115	0.0	0.0	0.0	0,0,0	-0.03	-0.03	-0.03
94,111,114												
	24.4	0.02	0.04	0.02	95,94,115	0.0	0.0	0.0	0,0,0			
	48.9	5.42e-03	0.01	3.54e-03	95,90,115	0.0	0.0	0.0	0,0,0			
53	0.0	0.01	0.01	0.01	96,96,116	0.0	0.0	0.0	0,0,0	-0.03	-0.03	-0.03
94,111,114												
	24.4	0.03	0.02	0.03	96,96,116	0.0	0.0	0.0	0,0,0			
	48.9	0.01	0.01	0.01	96,96,116	0.0	0.0	0.0	0,0,0			
54	0.0	6.51e-03	8.35e-03	5.19e-03	95,90,115	0.0	0.0	0.0	0,0,0	-0.03	-0.03	-0.03
94,111,114												
	24.4	0.02	0.03	0.02	95,94,115	0.0	0.0	0.0	0,0,0			
	48.9	6.25e-03	7.98e-03	4.91e-03	95,90,115	0.0	0.0	0.0	0,0,0			
55	0.0	0.01	9.96e-03	0.01	96,96,116	0.0	0.0	0.0	0,0,0	-0.03	-0.03	-0.03
94,111,114												
	24.4	0.03	0.02	0.03	96,96,116	0.0	0.0	0.0	0,0,0			
	48.9	0.01	9.96e-03	0.01	96,96,116	0.0	0.0	0.0	0,0,0			
56	0.0	6.44e-03	5.54e-03	5.39e-03	95,90,115	0.0	0.0	0.0	0,0,0	-0.03	-0.03	-0.03
94,111,114												
	24.4	0.02	0.03	0.02	95,94,115	0.0	0.0	0.0	0,0,0			
	48.9	6.10e-03	5.00e-03	4.98e-03	95,90,115	0.0	0.0	0.0	0,0,0			
57	0.0	9.79e-03	8.93e-03	9.48e-03	96,96,116	0.0	0.0	0.0	0,0,0	-0.03	-0.03	-0.03
90,111,114												
	24.4	0.03	0.02	0.02	96,96,116	0.0	0.0	0.0	0,0,0			
	48.9	9.90e-03	9.01e-03	9.67e-03	96,96,116	0.0	0.0	0.0	0,0,0			
58	0.0	6.43e-03	5.32e-03	5.37e-03	95,95,115	0.0	0.0	0.0	0,0,0	-0.03	-0.03	-0.03
90,111,114												
	24.4	0.03	0.03	0.02	95,94,115	0.0	0.0	0.0	0,0,0			
	48.9	5.92e-03	4.98e-03	4.72e-03	95,95,115	0.0	0.0	0.0	0,0,0			
59	0.0	8.06e-03	7.12e-03	7.49e-03	96,96,116	0.0	0.0	0.0	0,0,0	-0.03	-0.03	-0.03
90,111,114												
	24.4	0.03	0.02	0.02	96,93,116	0.0	0.0	0.0	0,0,0			
	48.9	8.57e-03	7.49e-03	8.17e-03	96,96,116	0.0	0.0	0.0	0,0,0			
60	0.0	6.70e-03	5.88e-03	5.84e-03	96,96,116	0.0	0.0	0.0	0,0,0	-0.03	-0.03	-0.03
90,111,114												
	24.4	0.03	0.03	0.02	96,93,116	0.0	0.0	0.0	0,0,0			
	48.9	6.09e-03	5.41e-03	5.08e-03	95,95,115	0.0	0.0	0.0	0,0,0			
61	0.0	4.42e-03	0.02	4.65e-03	90,95,114	0.0	0.0	0.0	0,0,0	0.18	0.17	0.16
96,108,116												
	25.0	5.18e-03	0.02	5.69e-03	90,95,114	0.0	0.0	0.0	0,0,0			
	50.0	4.59e-03	0.02	4.82e-03	90,95,114	0.0	0.0	0.0	0,0,0			
62	0.0	4.85e-03	4.94e-03	5.61e-03	90,90,114	0.0	0.0	0.0	0,0,0	0.18	0.17	0.16
96,108,116												
	25.0	4.78e-03	4.90e-03	5.64e-03	90,90,114	0.0	0.0	0.0	0,0,0			
	50.0	6.02e-03	5.80e-03	7.12e-03	90,90,114	0.0	0.0	0.0	0,0,0			
63	0.0	9.05e-03	8.81e-03	0.01	96,96,116	0.0	0.0	0.0	0,0,0	0.18	0.17	0.16
96,108,116												

Viale Duca Alessandro n. 11 – 43123 Parma
Cell. 335 1403156 – E mail ing.concari@gmail.com
Sito web: studioaire.it – P.IVA 02561480340

	25.0	8.39e-03	8.32e-03	9.09e-03	96,96,116	0.0	0.0	0.0	0,0,0			
	50.0	9.43e-03	9.08e-03	0.01	96,96,116	0.0	0.0	0.0	0,0,0			
64	0.0	0.01	0.01	0.01	96,96,116	0.0	0.0	0.0	0,0,0	0.18	0.17	0.16
96,108,116												
	25.0	0.01	0.01	0.01	96,96,116	0.0	0.0	0.0	0,0,0			
	50.0	0.01	0.01	0.01	96,96,116	0.0	0.0	0.0	0,0,0			
65	0.0	0.02	0.02	0.02	96,96,116	0.0	0.0	0.0	0,0,0	0.17	0.16	0.15
94,111,114												
	25.0	0.02	0.02	0.03	96,96,116	0.0	0.0	0.0	0,0,0			
	50.0	0.02	0.02	0.03	96,96,116	0.0	0.0	0.0	0,0,0			
66	0.0	3.18e-03	7.06e-03	3.49e-03	95,90,115	0.0	0.0	0.0	0,0,0	0.17	0.16	0.16
94,111,114												
	25.0	2.86e-03	6.20e-03	3.12e-03	95,90,115	0.0	0.0	0.0	0,0,0			
	50.0	2.53e-03	2.99e-03	1.18e-03	95,90,115	0.0	0.0	0.0	0,0,0			
67	0.0	0.0	0.06	0.0	0,96,0	0.0	0.0	0.0	0,0,0	0.17	0.16	0.16
94,111,114												
	25.0	0.0	0.06	0.0	0,96,0	0.0	0.0	0.0	0,0,0			
	50.0	0.0	0.06	0.0	0,96,0	0.0	0.0	0.0	0,0,0			

Trave	rRfck	rRfyk	rPfck	wR	wF	wP	dR	dF	dP
							-0.03	-0.03	-0.03
	0.03	0.14	0.03	0.0	0.0	0.0	0.19	0.17	0.17

Setto	rRfck	rRfyk	rPfck	Rif. cmb	wR	wF	wP	Rif. cmb
					mm	mm	mm	
34	0.10	0.18	0.12	92,96,116	0.0	0.0	0.0	0,0,0
35	0.16	0.30	0.21	92,92,116	0.0	0.0	0.0	0,0,0
36	0.19	0.35	0.25	92,92,116	0.0	0.0	0.0	0,0,0
37	0.19	0.34	0.25	92,92,116	0.0	0.0	0.0	0,0,0
38	0.18	0.31	0.23	92,92,116	0.0	0.0	0.0	0,0,0
39	0.12	0.20	0.16	92,92,116	0.0	0.0	0.0	0,0,0
40	0.11	0.29	0.12	94,93,114	0.0	0.0	0.0	0,0,0
41	0.05	0.09	0.06	92,92,116	0.0	0.0	0.0	0,0,0
42	0.05	0.07	0.06	92,92,116	0.0	0.0	0.0	0,0,0
43	0.05	0.06	0.06	92,92,116	0.0	0.0	0.0	0,0,0
44	0.06	0.08	0.07	92,92,116	0.0	0.0	0.0	0,0,0
45	0.06	0.08	0.07	92,92,116	0.0	0.0	0.0	0,0,0
46	0.06	0.09	0.07	94,90,116	0.0	0.0	0.0	0,0,0
47	0.20	0.32	0.23	94,94,114	0.0	0.0	0.0	0,0,0
48	0.04	0.04	0.06	90,90,114	0.0	0.0	0.0	0,0,0
49	0.05	0.05	0.07	92,90,116	0.0	0.0	0.0	0,0,0
50	0.07	0.08	0.09	92,92,116	0.0	0.0	0.0	0,0,0
51	0.08	0.11	0.10	92,92,116	0.0	0.0	0.0	0,0,0
52	0.08	0.10	0.10	92,92,116	0.0	0.0	0.0	0,0,0
53	0.08	0.11	0.10	94,90,114	0.0	0.0	0.0	0,0,0
54	0.28	0.45	0.33	94,94,114	0.0	0.0	0.0	0,0,0
55	0.04	0.04	0.05	92,90,116	0.0	0.0	0.0	0,0,0
56	0.07	0.08	0.09	92,92,116	0.0	0.0	0.0	0,0,0
57	0.09	0.11	0.11	92,92,116	0.0	0.0	0.0	0,0,0
58	0.09	0.10	0.11	92,92,116	0.0	0.0	0.0	0,0,0
59	0.08	0.10	0.11	92,92,116	0.0	0.0	0.0	0,0,0
60	0.11	0.14	0.13	94,94,114	0.0	0.0	0.0	0,0,0
61	0.34	0.55	0.41	94,94,114	0.22	0.0	0.0	94,0,0
62	0.04	0.04	0.05	92,90,116	0.0	0.0	0.0	0,0,0
63	0.08	0.09	0.10	92,92,116	0.0	0.0	0.0	0,0,0
64	0.10	0.12	0.12	92,92,116	0.0	0.0	0.0	0,0,0
65	0.10	0.11	0.12	92,92,116	0.0	0.0	0.0	0,0,0
66	0.08	0.09	0.11	92,92,116	0.0	0.0	0.0	0,0,0
67	0.14	0.17	0.16	94,94,114	0.0	0.0	0.0	0,0,0
68	0.39	0.63	0.47	94,94,114	0.25	0.23	0.23	94,111,114
69	0.04	0.04	0.05	92,90,116	0.0	0.0	0.0	0,0,0
70	0.09	0.10	0.11	92,92,116	0.0	0.0	0.0	0,0,0
71	0.10	0.13	0.13	92,92,116	0.0	0.0	0.0	0,0,0
72	0.10	0.12	0.13	92,92,116	0.0	0.0	0.0	0,0,0
73	0.08	0.08	0.10	92,92,116	0.0	0.0	0.0	0,0,0
74	0.16	0.20	0.18	94,94,114	0.0	0.0	0.0	0,0,0
75	0.42	0.68	0.51	94,94,114	0.27	0.25	0.25	94,111,114
76	0.05	0.04	0.06	92,92,116	0.0	0.0	0.0	0,0,0
77	0.09	0.10	0.11	92,92,116	0.0	0.0	0.0	0,0,0
78	0.11	0.13	0.13	92,92,116	0.0	0.0	0.0	0,0,0
79	0.11	0.12	0.13	92,92,116	0.0	0.0	0.0	0,0,0
80	0.08	0.08	0.10	92,92,116	0.0	0.0	0.0	0,0,0
81	0.18	0.22	0.20	94,94,114	0.0	0.0	0.0	0,0,0
82	0.45	0.72	0.54	94,94,114	0.29	0.27	0.26	94,111,114
83	0.05	0.04	0.06	92,92,116	0.0	0.0	0.0	0,0,0
84	0.09	0.11	0.11	92,92,116	0.0	0.0	0.0	0,0,0
85	0.11	0.13	0.13	92,92,116	0.0	0.0	0.0	0,0,0
86	0.11	0.12	0.13	92,92,116	0.0	0.0	0.0	0,0,0
87	0.08	0.07	0.10	92,92,116	0.0	0.0	0.0	0,0,0
88	0.19	0.24	0.21	94,94,114	0.0	0.0	0.0	0,0,0
89	0.46	0.75	0.56	94,94,114	0.30	0.28	0.27	94,106,114
90	0.05	0.04	0.06	92,92,116	0.0	0.0	0.0	0,0,0
91	0.09	0.11	0.12	92,92,116	0.0	0.0	0.0	0,0,0
92	0.11	0.13	0.13	92,92,116	0.0	0.0	0.0	0,0,0
93	0.11	0.12	0.13	92,92,116	0.0	0.0	0.0	0,0,0
94	0.08	0.07	0.09	92,92,116	0.0	0.0	0.0	0,0,0
95	0.20	0.26	0.22	94,94,114	0.0	0.0	0.0	0,0,0
96	0.47	0.76	0.57	94,94,114	0.30	0.28	0.28	94,106,114
97	0.05	0.04	0.06	92,92,116	0.0	0.0	0.0	0,0,0
98	0.09	0.11	0.12	92,92,116	0.0	0.0	0.0	0,0,0
99	0.11	0.13	0.13	92,92,116	0.0	0.0	0.0	0,0,0
100	0.11	0.12	0.13	92,92,116	0.0	0.0	0.0	0,0,0
101	0.07	0.07	0.09	92,92,116	0.0	0.0	0.0	0,0,0
102	0.20	0.26	0.23	94,94,114	0.0	0.0	0.0	0,0,0
103	0.48	0.77	0.57	94,94,114	0.31	0.28	0.28	94,106,114
104	0.05	0.04	0.06	92,92,116	0.0	0.0	0.0	0,0,0

Viale Duca Alessandro n. 11 – 43123 Parma
Cell. 335 1403156 – E mail ing.concari@gmail.com
Sito web: studioaire.it – P.IVA 02561480340

105	0.09	0.11	0.12	92,92,116	0.0	0.0	0.0	0,0,0
106	0.11	0.13	0.13	92,92,116	0.0	0.0	0.0	0,0,0
107	0.11	0.12	0.13	92,92,116	0.0	0.0	0.0	0,0,0
108	0.07	0.07	0.09	92,92,116	0.0	0.0	0.0	0,0,0
109	0.20	0.27	0.23	94,94,114	0.0	0.0	0.0	0,0,0
110	0.48	0.77	0.57	94,94,114	0.31	0.28	0.28	94,106,114
111	0.05	0.04	0.06	92,92,116	0.0	0.0	0.0	0,0,0
112	0.09	0.11	0.11	92,92,116	0.0	0.0	0.0	0,0,0
113	0.11	0.13	0.13	92,92,116	0.0	0.0	0.0	0,0,0
114	0.11	0.12	0.13	92,92,116	0.0	0.0	0.0	0,0,0
115	0.07	0.07	0.09	92,92,116	0.0	0.0	0.0	0,0,0
116	0.20	0.26	0.22	94,94,114	0.0	0.0	0.0	0,0,0
117	0.47	0.76	0.57	94,94,114	0.30	0.28	0.28	94,111,114
118	0.05	0.03	0.06	92,92,116	0.0	0.0	0.0	0,0,0
119	0.09	0.10	0.11	92,92,116	0.0	0.0	0.0	0,0,0
120	0.11	0.13	0.13	92,92,116	0.0	0.0	0.0	0,0,0
121	0.10	0.12	0.13	92,92,116	0.0	0.0	0.0	0,0,0
122	0.08	0.08	0.10	92,92,116	0.0	0.0	0.0	0,0,0
123	0.19	0.26	0.21	94,94,114	0.0	0.0	0.0	0,0,0
124	0.47	0.75	0.56	94,94,114	0.30	0.28	0.27	94,111,114
125	0.04	0.03	0.05	92,92,116	0.0	0.0	0.0	0,0,0
126	0.09	0.10	0.11	92,92,116	0.0	0.0	0.0	0,0,0
127	0.10	0.13	0.13	92,92,116	0.0	0.0	0.0	0,0,0
128	0.10	0.12	0.13	92,92,116	0.0	0.0	0.0	0,0,0
129	0.08	0.10	0.10	92,92,116	0.0	0.0	0.0	0,0,0
130	0.18	0.24	0.20	94,94,114	0.0	0.0	0.0	0,0,0
131	0.45	0.72	0.54	94,94,114	0.29	0.27	0.26	94,111,114
132	0.04	0.02	0.05	92,90,116	0.0	0.0	0.0	0,0,0
133	0.08	0.09	0.10	92,92,116	0.0	0.0	0.0	0,0,0
134	0.10	0.13	0.12	92,92,116	0.0	0.0	0.0	0,0,0
135	0.10	0.12	0.12	92,92,116	0.0	0.0	0.0	0,0,0
136	0.08	0.12	0.10	92,92,116	0.0	0.0	0.0	0,0,0
137	0.15	0.21	0.17	94,96,114	0.0	0.0	0.0	0,0,0
138	0.42	0.67	0.50	94,94,114	0.27	0.25	0.25	94,111,114
139	0.04	0.02	0.05	92,90,116	0.0	0.0	0.0	0,0,0
140	0.07	0.08	0.09	92,92,116	0.0	0.0	0.0	0,0,0
141	0.09	0.12	0.11	92,92,116	0.0	0.0	0.0	0,0,0
142	0.09	0.13	0.11	92,96,116	0.0	0.0	0.0	0,0,0
143	0.08	0.14	0.10	92,96,116	0.0	0.0	0.0	0,0,0
144	0.12	0.17	0.14	94,96,114	0.0	0.0	0.0	0,0,0
145	0.37	0.60	0.45	94,94,114	0.24	0.21	0.0	96,106,0
146	0.04	0.05	0.05	90,90,114	0.0	0.0	0.0	0,0,0
147	0.06	0.05	0.07	92,92,116	0.0	0.0	0.0	0,0,0
148	0.07	0.10	0.09	92,92,116	0.0	0.0	0.0	0,0,0
149	0.08	0.14	0.10	92,96,116	0.0	0.0	0.0	0,0,0
150	0.08	0.20	0.10	92,96,116	0.0	0.0	0.0	0,0,0
151	0.09	0.20	0.10	94,96,114	0.0	0.0	0.0	0,0,0
152	0.30	0.49	0.36	94,96,114	0.0	0.0	0.0	0,0,0
153	0.04	0.06	0.04	90,92,114	0.0	0.0	0.0	0,0,0
154	0.05	0.06	0.05	96,92,114	0.0	0.0	0.0	0,0,0
155	0.05	0.12	0.05	96,92,114	0.0	0.0	0.0	0,0,0
156	0.06	0.16	0.08	94,96,114	0.0	0.0	0.0	0,0,0
157	0.06	0.28	0.08	90,96,114	0.0	0.0	0.0	0,0,0
158	0.07	0.35	0.09	90,94,114	0.0	0.0	0.0	0,0,0
159	0.21	0.57	0.25	94,94,114	0.0	0.0	0.0	0,0,0
160	0.04	0.09	0.06	92,94,116	0.0	0.0	0.0	0,0,0
161	0.07	0.08	0.08	92,92,116	0.0	0.0	0.0	0,0,0
162	0.07	0.09	0.09	92,92,116	0.0	0.0	0.0	0,0,0
163	0.07	0.09	0.09	92,92,116	0.0	0.0	0.0	0,0,0
164	0.06	0.10	0.07	92,96,116	0.0	0.0	0.0	0,0,0
165	0.06	0.14	0.07	94,96,114	0.0	0.0	0.0	0,0,0
166	0.08	0.21	0.09	94,93,114	0.0	0.0	0.0	0,0,0
167	0.03	0.04	0.04	90,90,114	0.0	0.0	0.0	0,0,0
168	0.04	0.03	0.05	90,90,114	0.0	0.0	0.0	0,0,0
169	0.04	0.03	0.05	90,90,114	0.0	0.0	0.0	0,0,0
170	0.04	0.04	0.05	90,90,114	0.0	0.0	0.0	0,0,0
171	0.05	0.05	0.05	93,95,113	0.0	0.0	0.0	0,0,0
172	0.07	0.11	0.07	93,95,113	0.0	0.0	0.0	0,0,0
173	0.08	0.17	0.09	93,95,113	0.0	0.0	0.0	0,0,0
174	0.03	0.02	0.03	93,90,113	0.0	0.0	0.0	0,0,0
175	0.03	0.03	0.04	94,90,114	0.0	0.0	0.0	0,0,0
176	0.04	0.04	0.05	94,90,114	0.0	0.0	0.0	0,0,0
177	0.05	0.05	0.05	94,90,114	0.0	0.0	0.0	0,0,0
178	0.06	0.05	0.07	93,95,113	0.0	0.0	0.0	0,0,0
179	0.09	0.11	0.09	93,93,113	0.0	0.0	0.0	0,0,0
180	0.11	0.16	0.11	93,93,113	0.0	0.0	0.0	0,0,0
181	0.03	0.03	0.03	93,90,113	0.0	0.0	0.0	0,0,0
182	0.03	0.03	0.04	93,90,114	0.0	0.0	0.0	0,0,0
183	0.04	0.05	0.05	94,90,114	0.0	0.0	0.0	0,0,0
184	0.06	0.06	0.06	94,90,114	0.0	0.0	0.0	0,0,0
185	0.08	0.06	0.08	93,93,113	0.0	0.0	0.0	0,0,0
186	0.11	0.12	0.11	93,93,113	0.0	0.0	0.0	0,0,0
187	0.14	0.17	0.14	93,93,113	0.0	0.0	0.0	0,0,0
188	0.03	0.04	0.03	93,90,113	0.0	0.0	0.0	0,0,0
189	0.03	0.04	0.04	93,90,113	0.0	0.0	0.0	0,0,0
190	0.05	0.06	0.06	93,90,114	0.0	0.0	0.0	0,0,0
191	0.07	0.07	0.07	93,90,113	0.0	0.0	0.0	0,0,0
192	0.09	0.08	0.10	93,93,113	0.0	0.0	0.0	0,0,0
193	0.13	0.13	0.13	93,93,113	0.0	0.0	0.0	0,0,0
194	0.16	0.19	0.17	93,93,113	0.0	0.0	0.0	0,0,0
195	0.02	0.06	0.03	93,90,113	0.0	0.0	0.0	0,0,0
196	0.04	0.05	0.04	93,90,113	0.0	0.0	0.0	0,0,0
197	0.05	0.06	0.06	93,94,113	0.0	0.0	0.0	0,0,0
198	0.08	0.07	0.08	93,94,113	0.0	0.0	0.0	0,0,0
199	0.11	0.09	0.11	93,93,113	0.0	0.0	0.0	0,0,0
200	0.14	0.15	0.15	93,93,113	0.0	0.0	0.0	0,0,0
201	0.19	0.22	0.19	93,93,113	0.0	0.0	0.0	0,0,0
202	0.02	0.07	0.03	94,90,114	0.0	0.0	0.0	0,0,0

Viale Duca Alessandro n. 11 – 43123 Parma
Cell. 335 1403156 – E mail ing.concari@gmail.com
Sito web: studioaire.it – P.IVA 02561480340

203	0.04	0.05	0.04	93,90,113	0.0	0.0	0.0	0,0,0
204	0.06	0.07	0.06	93,94,113	0.0	0.0	0.0	0,0,0
205	0.08	0.08	0.09	93,93,113	0.0	0.0	0.0	0,0,0
206	0.12	0.11	0.12	93,93,113	0.0	0.0	0.0	0,0,0
207	0.16	0.17	0.17	93,93,113	0.0	0.0	0.0	0,0,0
208	0.20	0.24	0.21	93,93,113	0.0	0.0	0.0	0,0,0
209	0.02	0.06	0.02	93,90,114	0.0	0.0	0.0	0,0,0
210	0.04	0.06	0.04	93,90,113	0.0	0.0	0.0	0,0,0
211	0.06	0.07	0.07	93,94,113	0.0	0.0	0.0	0,0,0
212	0.09	0.09	0.10	93,93,113	0.0	0.0	0.0	0,0,0
213	0.12	0.12	0.13	93,93,113	0.0	0.0	0.0	0,0,0
214	0.17	0.18	0.18	93,93,113	0.0	0.0	0.0	0,0,0
215	0.21	0.26	0.23	93,93,113	0.0	0.0	0.0	0,0,0
216	0.02	0.06	0.02	93,90,113	0.0	0.0	0.0	0,0,0
217	0.04	0.06	0.04	93,90,113	0.0	0.0	0.0	0,0,0
218	0.06	0.07	0.07	93,94,113	0.0	0.0	0.0	0,0,0
219	0.09	0.09	0.10	93,93,113	0.0	0.0	0.0	0,0,0
220	0.13	0.12	0.14	93,93,113	0.0	0.0	0.0	0,0,0
221	0.17	0.19	0.18	93,93,113	0.0	0.0	0.0	0,0,0
222	0.22	0.28	0.23	93,93,113	0.0	0.0	0.0	0,0,0
223	0.02	0.06	0.02	93,90,113	0.0	0.0	0.0	0,0,0
224	0.04	0.05	0.04	93,90,113	0.0	0.0	0.0	0,0,0
225	0.06	0.07	0.07	93,94,113	0.0	0.0	0.0	0,0,0
226	0.09	0.09	0.10	93,93,113	0.0	0.0	0.0	0,0,0
227	0.13	0.13	0.14	93,93,113	0.0	0.0	0.0	0,0,0
228	0.17	0.20	0.19	93,93,113	0.0	0.0	0.0	0,0,0
229	0.22	0.28	0.24	93,93,113	0.0	0.0	0.0	0,0,0
230	0.02	0.06	0.02	93,90,113	0.0	0.0	0.0	0,0,0
231	0.04	0.05	0.04	93,90,113	0.0	0.0	0.0	0,0,0
232	0.06	0.07	0.07	93,94,113	0.0	0.0	0.0	0,0,0
233	0.09	0.09	0.10	93,93,113	0.0	0.0	0.0	0,0,0
234	0.13	0.13	0.14	93,93,113	0.0	0.0	0.0	0,0,0
235	0.17	0.20	0.19	93,93,113	0.0	0.0	0.0	0,0,0
236	0.22	0.29	0.24	93,93,113	0.0	0.0	0.0	0,0,0
237	0.02	0.06	0.02	93,90,114	0.0	0.0	0.0	0,0,0
238	0.03	0.05	0.04	93,90,113	0.0	0.0	0.0	0,0,0
239	0.06	0.07	0.06	93,94,113	0.0	0.0	0.0	0,0,0
240	0.09	0.09	0.10	93,93,113	0.0	0.0	0.0	0,0,0
241	0.13	0.14	0.14	93,93,113	0.0	0.0	0.0	0,0,0
242	0.17	0.20	0.18	93,93,113	0.0	0.0	0.0	0,0,0
243	0.22	0.29	0.24	93,93,113	0.0	0.0	0.0	0,0,0
244	0.02	0.05	0.03	93,90,113	0.0	0.0	0.0	0,0,0
245	0.04	0.06	0.04	93,90,113	0.0	0.0	0.0	0,0,0
246	0.05	0.08	0.06	93,94,113	0.0	0.0	0.0	0,0,0
247	0.08	0.10	0.09	93,93,113	0.0	0.0	0.0	0,0,0
248	0.12	0.14	0.13	93,93,113	0.0	0.0	0.0	0,0,0
249	0.17	0.21	0.18	93,93,113	0.0	0.0	0.0	0,0,0
250	0.21	0.29	0.23	93,93,113	0.0	0.0	0.0	0,0,0
251	0.03	0.04	0.03	93,90,113	0.0	0.0	0.0	0,0,0
252	0.04	0.06	0.04	93,90,113	0.0	0.0	0.0	0,0,0
253	0.05	0.09	0.05	93,94,113	0.0	0.0	0.0	0,0,0
254	0.07	0.11	0.08	93,93,113	0.0	0.0	0.0	0,0,0
255	0.11	0.14	0.12	93,95,113	0.0	0.0	0.0	0,0,0
256	0.16	0.21	0.17	93,93,113	0.0	0.0	0.0	0,0,0
257	0.21	0.29	0.22	93,93,113	0.0	0.0	0.0	0,0,0
258	0.03	0.04	0.03	93,90,113	0.0	0.0	0.0	0,0,0
259	0.04	0.06	0.04	93,94,113	0.0	0.0	0.0	0,0,0
260	0.04	0.08	0.05	93,94,113	0.0	0.0	0.0	0,0,0
261	0.06	0.11	0.06	93,93,113	0.0	0.0	0.0	0,0,0
262	0.10	0.15	0.10	93,95,113	0.0	0.0	0.0	0,0,0
263	0.15	0.21	0.16	93,93,113	0.0	0.0	0.0	0,0,0
264	0.19	0.28	0.21	93,93,113	0.0	0.0	0.0	0,0,0
265	0.03	0.04	0.03	93,90,113	0.0	0.0	0.0	0,0,0
266	0.03	0.05	0.04	93,90,113	0.0	0.0	0.0	0,0,0
267	0.04	0.08	0.04	94,94,114	0.0	0.0	0.0	0,0,0
268	0.04	0.10	0.05	94,94,114	0.0	0.0	0.0	0,0,0
269	0.08	0.14	0.08	93,95,113	0.0	0.0	0.0	0,0,0
270	0.13	0.21	0.14	93,95,113	0.0	0.0	0.0	0,0,0
271	0.18	0.26	0.19	93,93,113	0.0	0.0	0.0	0,0,0
272	0.03	0.09	0.03	93,96,113	0.0	0.0	0.0	0,0,0
273	0.03	0.09	0.03	93,96,114	0.0	0.0	0.0	0,0,0
274	0.03	0.10	0.03	93,96,114	0.0	0.0	0.0	0,0,0
275	0.03	0.10	0.04	94,93,114	0.0	0.0	0.0	0,0,0
276	0.06	0.13	0.06	93,95,113	0.0	0.0	0.0	0,0,0
277	0.10	0.20	0.11	93,95,113	0.0	0.0	0.0	0,0,0
278	0.15	0.23	0.16	93,95,113	0.0	0.0	0.0	0,0,0
279	0.04	0.13	0.04	93,96,113	0.0	0.0	0.0	0,0,0
280	0.04	0.17	0.04	93,96,113	0.0	0.0	0.0	0,0,0
281	0.05	0.20	0.05	93,95,113	0.0	0.0	0.0	0,0,0
282	0.06	0.22	0.07	93,95,113	0.0	0.0	0.0	0,0,0
283	0.08	0.23	0.08	93,95,113	0.0	0.0	0.0	0,0,0
284	0.08	0.28	0.08	93,93,113	0.0	0.0	0.0	0,0,0
285	0.11	0.35	0.11	93,93,113	0.0	0.0	0.0	0,0,0
286	0.08	0.21	0.11	92,96,116	0.0	0.0	0.0	0,0,0
287	0.08	0.20	0.10	92,96,116	0.0	0.0	0.0	0,0,0
288	0.08	0.18	0.10	92,96,116	0.0	0.0	0.0	0,0,0
289	0.08	0.17	0.10	92,92,116	0.0	0.0	0.0	0,0,0
290	0.09	0.16	0.11	90,92,114	0.0	0.0	0.0	0,0,0
291	0.09	0.19	0.12	90,94,114	0.0	0.0	0.0	0,0,0
292	0.16	0.28	0.19	94,93,114	0.0	0.0	0.0	0,0,0
293	0.09	0.22	0.11	92,96,116	0.0	0.0	0.0	0,0,0
294	0.09	0.23	0.12	92,96,116	0.0	0.0	0.0	0,0,0
295	0.09	0.22	0.12	92,96,116	0.0	0.0	0.0	0,0,0
296	0.10	0.20	0.13	90,96,114	0.0	0.0	0.0	0,0,0
297	0.10	0.16	0.13	90,90,114	0.0	0.0	0.0	0,0,0
298	0.08	0.18	0.11	94,94,116	0.0	0.0	0.0	0,0,0
299	0.28	0.40	0.34	94,94,114	0.0	0.0	0.0	0,0,0
300	0.09	0.22	0.11	92,96,116	0.0	0.0	0.0	0,0,0

Viale Duca Alessandro n. 11 – 43123 Parma
Cell. 335 1403156 – E mail ing.concari@gmail.com
Sito web: studioaire.it – P.IVA 02561480340

301	0.11	0.23	0.14	92,96,116	0.0	0.0	0.0	0,0,0
302	0.12	0.23	0.15	92,96,116	0.0	0.0	0.0	0,0,0
303	0.12	0.20	0.15	92,96,116	0.0	0.0	0.0	0,0,0
304	0.11	0.17	0.14	92,90,116	0.0	0.0	0.0	0,0,0
305	0.10	0.13	0.12	94,94,114	0.0	0.0	0.0	0,0,0
306	0.36	0.52	0.44	94,94,114	0.20	0.0	0.0	94,0,0
307	0.08	0.21	0.11	92,96,116	0.0	0.0	0.0	0,0,0
308	0.12	0.23	0.15	92,96,116	0.0	0.0	0.0	0,0,0
309	0.14	0.23	0.18	92,96,116	0.0	0.0	0.0	0,0,0
310	0.14	0.21	0.18	92,96,116	0.0	0.0	0.0	0,0,0
311	0.12	0.17	0.15	92,92,116	0.0	0.0	0.0	0,0,0
312	0.12	0.10	0.14	94,94,114	0.0	0.0	0.0	0,0,0
313	0.41	0.60	0.50	94,94,114	0.24	0.23	0.22	94,111,114
314	0.08	0.18	0.10	92,96,116	0.0	0.0	0.0	0,0,0
315	0.13	0.21	0.16	92,92,116	0.0	0.0	0.0	0,0,0
316	0.15	0.24	0.19	92,92,116	0.0	0.0	0.0	0,0,0
317	0.15	0.23	0.19	92,92,116	0.0	0.0	0.0	0,0,0
318	0.12	0.18	0.16	92,92,116	0.0	0.0	0.0	0,0,0
319	0.14	0.13	0.16	94,94,114	0.0	0.0	0.0	0,0,0
320	0.43	0.65	0.53	94,94,114	0.25	0.24	0.24	94,111,114
321	0.08	0.19	0.10	92,96,116	0.0	0.0	0.0	0,0,0
322	0.13	0.24	0.17	92,92,116	0.0	0.0	0.0	0,0,0
323	0.15	0.26	0.19	92,92,116	0.0	0.0	0.0	0,0,0
324	0.15	0.25	0.19	92,92,116	0.0	0.0	0.0	0,0,0
325	0.12	0.19	0.16	92,92,116	0.0	0.0	0.0	0,0,0
326	0.14	0.16	0.16	94,94,114	0.0	0.0	0.0	0,0,0
327	0.43	0.66	0.53	94,94,114	0.26	0.25	0.24	94,111,114
328	0.08	0.23	0.10	92,96,116	0.0	0.0	0.0	0,0,0
329	0.13	0.26	0.17	92,96,116	0.0	0.0	0.0	0,0,0
330	0.15	0.26	0.19	92,92,116	0.0	0.0	0.0	0,0,0
331	0.15	0.26	0.19	92,92,116	0.0	0.0	0.0	0,0,0
332	0.12	0.20	0.16	92,92,116	0.0	0.0	0.0	0,0,0
333	0.14	0.18	0.16	94,94,114	0.0	0.0	0.0	0,0,0
334	0.43	0.65	0.53	94,94,114	0.26	0.25	0.25	94,111,114
335	0.08	0.25	0.10	92,96,116	0.0	0.0	0.0	0,0,0
336	0.13	0.27	0.16	92,96,116	0.0	0.0	0.0	0,0,0
337	0.14	0.27	0.19	92,96,116	0.0	0.0	0.0	0,0,0
338	0.14	0.25	0.19	92,96,116	0.0	0.0	0.0	0,0,0
339	0.12	0.19	0.16	92,92,116	0.0	0.0	0.0	0,0,0
340	0.13	0.19	0.15	94,94,114	0.0	0.0	0.0	0,0,0
341	0.41	0.64	0.50	94,94,114	0.25	0.24	0.24	94,111,114
342	0.09	0.26	0.11	92,96,116	0.0	0.0	0.0	0,0,0
343	0.12	0.27	0.15	92,96,116	0.0	0.0	0.0	0,0,0
344	0.13	0.26	0.17	92,96,116	0.0	0.0	0.0	0,0,0
345	0.13	0.25	0.17	92,96,116	0.0	0.0	0.0	0,0,0
346	0.11	0.18	0.15	92,92,116	0.0	0.0	0.0	0,0,0
347	0.11	0.20	0.13	94,94,114	0.0	0.0	0.0	0,0,0
348	0.37	0.58	0.45	94,94,114	0.23	0.22	0.0	94,106,0
349	0.09	0.24	0.11	92,96,116	0.0	0.0	0.0	0,0,0
350	0.10	0.26	0.13	92,96,116	0.0	0.0	0.0	0,0,0
351	0.11	0.25	0.14	92,96,116	0.0	0.0	0.0	0,0,0
352	0.10	0.23	0.13	92,96,116	0.0	0.0	0.0	0,0,0
353	0.10	0.17	0.13	92,96,116	0.0	0.0	0.0	0,0,0
354	0.09	0.21	0.10	94,94,114	0.0	0.0	0.0	0,0,0
355	0.30	0.50	0.37	94,94,114	0.0	0.0	0.0	0,0,0
356	0.09	0.22	0.11	92,96,116	0.0	0.0	0.0	0,0,0
357	0.08	0.22	0.10	92,96,116	0.0	0.0	0.0	0,0,0
358	0.08	0.21	0.10	92,96,116	0.0	0.0	0.0	0,0,0
359	0.07	0.18	0.09	90,96,114	0.0	0.0	0.0	0,0,0
360	0.07	0.18	0.10	90,96,114	0.0	0.0	0.0	0,0,0
361	0.07	0.23	0.09	94,94,116	0.0	0.0	0.0	0,0,0
362	0.21	0.36	0.26	94,94,114	0.0	0.0	0.0	0,0,0
363	0.10	0.20	0.13	92,96,116	0.0	0.0	0.0	0,0,0
364	0.16	0.31	0.21	92,92,116	0.0	0.0	0.0	0,0,0
365	0.19	0.36	0.25	92,92,116	0.0	0.0	0.0	0,0,0
366	0.19	0.37	0.25	92,92,116	0.0	0.0	0.0	0,0,0
367	0.18	0.35	0.23	92,92,116	0.0	0.0	0.0	0,0,0
368	0.13	0.26	0.16	92,92,116	0.0	0.0	0.0	0,0,0
369	0.10	0.23	0.12	94,94,114	0.0	0.0	0.0	0,0,0
370	0.02	0.16	0.02	96,96,116	0.0	0.0	0.0	0,0,0
371	0.04	0.20	0.04	93,96,113	0.0	0.0	0.0	0,0,0
372	0.05	0.24	0.05	93,95,113	0.0	0.0	0.0	0,0,0
373	0.06	0.26	0.07	93,95,113	0.0	0.0	0.0	0,0,0
374	0.08	0.27	0.08	93,95,113	0.0	0.0	0.0	0,0,0
375	0.08	0.28	0.08	93,93,113	0.0	0.0	0.0	0,0,0
376	0.13	0.53	0.13	93,93,113	0.0	0.0	0.0	0,0,0
377	0.01	0.16	0.01	90,92,114	0.0	0.0	0.0	0,0,0
378	0.02	0.20	0.02	90,95,113	0.0	0.0	0.0	0,0,0
379	0.04	0.19	0.05	90,95,114	0.0	0.0	0.0	0,0,0
380	0.05	0.14	0.06	96,95,116	0.0	0.0	0.0	0,0,0
381	0.06	0.11	0.07	96,95,116	0.0	0.0	0.0	0,0,0
382	0.10	0.07	0.11	95,95,115	0.0	0.0	0.0	0,0,0
383	0.20	0.38	0.20	93,93,113	0.0	0.0	0.0	0,0,0
384	0.01	0.20	0.01	94,96,113	0.0	0.0	0.0	0,0,0
385	0.02	0.12	0.02	93,95,113	0.0	0.0	0.0	0,0,0
391	0.01	0.25	0.01	94,95,114	0.0	0.0	0.0	0,0,0
392	0.01	0.14	0.01	96,95,116	0.0	0.0	0.0	0,0,0
398	0.01	0.34	0.01	95,95,115	0.0	0.0	0.0	0,0,0
399	0.02	0.15	0.02	96,95,116	0.0	0.0	0.0	0,0,0
405	0.02	0.53	0.02	95,95,115	0.0	0.0	0.0	0,0,0
406	0.03	0.16	0.03	95,95,115	0.0	0.0	0.0	0,0,0
412	0.03	0.47	0.03	96,95,116	0.0	0.0	0.0	0,0,0
413	0.08	0.43	0.10	96,96,116	0.0	0.0	0.0	0,0,0
414	0.16	0.36	0.18	96,96,116	0.0	0.0	0.0	0,0,0
415	0.11	0.10	0.13	96,90,116	0.0	0.0	0.0	0,0,0
416	0.12	0.07	0.14	94,90,114	0.0	0.0	0.0	0,0,0
417	0.17	0.40	0.20	94,90,114	0.0	0.0	0.0	0,0,0
418	0.24	0.48	0.27	94,94,114	0.27	0.25	0.23	90,111,114

Viale Duca Alessandro n. 11 – 43123 Parma
Cell. 335 1403156 – E mail ing.concari@gmail.com
Sito web: studioaire.it – P.IVA 02561480340

419	0.03	0.50	0.03	96,96,116	0.0	0.0	0.0	0,0,0
420	0.08	0.34	0.09	96,96,116	0.0	0.0	0.0	0,0,0
426	0.03	0.42	0.03	96,96,116	0.0	0.0	0.0	0,0,0
427	0.02	0.37	0.03	96,96,116	0.0	0.0	0.0	0,0,0
433	0.02	0.39	0.03	96,96,114	0.0	0.0	0.0	0,0,0
434	0.02	0.53	0.03	96,96,116	0.0	0.0	0.0	0,0,0
440	0.02	0.29	0.03	94,96,114	0.0	0.0	0.0	0,0,0
441	0.02	0.65	0.03	96,96,116	0.0	0.0	0.0	0,0,0
442	0.04	0.66	0.04	96,96,116	0.35	0.30	0.29	96,108,116
443	0.03	0.51	0.03	96,96,116	0.0	0.0	0.0	0,0,0
444	0.04	0.32	0.05	96,96,116	0.0	0.0	0.0	0,0,0
445	0.09	0.28	0.09	94,96,114	0.0	0.0	0.0	0,0,0
446	0.22	0.57	0.25	94,94,114	0.0	0.0	0.0	0,0,0
447	0.03	0.23	0.03	96,94,116	0.0	0.0	0.0	0,0,0
448	0.03	0.33	0.04	96,96,116	0.0	0.0	0.0	0,0,0
449	0.03	0.37	0.04	92,96,116	0.0	0.0	0.0	0,0,0
450	0.04	0.40	0.05	96,96,116	0.0	0.0	0.0	0,0,0
451	0.04	0.31	0.05	96,96,116	0.0	0.0	0.0	0,0,0
452	0.05	0.41	0.06	96,94,116	0.0	0.0	0.0	0,0,0
453	0.08	0.58	0.08	93,94,113	0.0	0.0	0.0	0,0,0

Setto	rRfck	rRfyk	rPfck		wR	wF	wP
	0.48	0.77	0.57		0.35	0.30	0.29

Guscio	rRfck	rRfyk	rPfck	Rif. cmb	wR	wF	wP	Rif. cmb
					mm	mm	mm	
1	0.15	0.33	0.16	94,93,114	0.0	0.0	0.0	0,0,0
2	0.15	0.33	0.17	94,94,114	0.0	0.0	0.0	0,0,0
3	0.17	0.37	0.19	94,94,114	0.0	0.0	0.0	0,0,0
4	0.18	0.40	0.20	94,94,114	0.0	0.0	0.0	0,0,0
5	0.18	0.40	0.20	94,94,114	0.0	0.0	0.0	0,0,0
6	0.16	0.34	0.18	94,94,114	0.0	0.0	0.0	0,0,0
7	0.12	0.26	0.13	94,94,114	0.0	0.0	0.0	0,0,0
8	0.11	0.26	0.12	93,93,113	0.0	0.0	0.0	0,0,0
9	0.11	0.25	0.12	93,93,113	0.0	0.0	0.0	0,0,0
10	0.11	0.21	0.13	94,93,114	0.0	0.0	0.0	0,0,0
11	0.15	0.32	0.17	94,94,114	0.0	0.0	0.0	0,0,0
12	0.17	0.42	0.20	94,94,114	0.0	0.0	0.0	0,0,0
13	0.14	0.32	0.15	94,93,114	0.0	0.0	0.0	0,0,0
14	0.16	0.34	0.16	93,93,113	0.0	0.0	0.0	0,0,0
15	0.14	0.28	0.16	94,94,114	0.0	0.0	0.0	0,0,0
16	0.17	0.35	0.19	94,94,114	0.0	0.0	0.0	0,0,0
17	0.17	0.34	0.19	94,94,114	0.0	0.0	0.0	0,0,0
18	0.13	0.32	0.15	96,96,116	0.0	0.0	0.0	0,0,0
19	0.16	0.40	0.18	96,96,116	0.0	0.0	0.0	0,0,0
20	0.09	0.17	0.09	93,93,113	0.0	0.0	0.0	0,0,0
21	0.09	0.17	0.09	93,93,113	0.0	0.0	0.0	0,0,0
22	0.18	0.32	0.20	94,94,114	0.0	0.0	0.0	0,0,0
23	0.23	0.44	0.26	94,94,114	0.0	0.0	0.0	0,0,0
24	0.15	0.31	0.17	94,94,114	0.0	0.0	0.0	0,0,0
25	0.08	0.21	0.08	93,93,113	0.0	0.0	0.0	0,0,0
26	0.13	0.38	0.14	95,95,115	0.0	0.0	0.0	0,0,0
27	0.14	0.32	0.16	94,95,114	0.0	0.0	0.0	0,0,0
28	0.16	0.31	0.18	96,94,116	0.0	0.0	0.0	0,0,0
29	0.16	0.31	0.18	96,94,116	0.0	0.0	0.0	0,0,0
30	0.13	0.25	0.14	96,96,116	0.0	0.0	0.0	0,0,0
31	0.10	0.29	0.12	96,96,116	0.0	0.0	0.0	0,0,0
32	0.07	0.10	0.07	93,93,113	0.0	0.0	0.0	0,0,0
33	0.08	0.16	0.09	94,94,114	0.0	0.0	0.0	0,0,0
386	0.21	0.50	0.24	94,94,114	0.0	0.0	0.0	0,0,0
387	0.23	0.59	0.26	96,96,116	0.0	0.0	0.0	0,0,0
388	0.11	0.28	0.11	94,96,114	0.0	0.0	0.0	0,0,0
389	0.07	0.15	0.06	93,93,113	0.0	0.0	0.0	0,0,0
390	0.06	0.17	0.06	93,95,113	0.0	0.0	0.0	0,0,0
393	0.06	0.17	0.06	93,93,113	0.0	0.0	0.0	0,0,0
394	0.06	0.14	0.06	93,93,113	0.0	0.0	0.0	0,0,0
395	0.05	0.12	0.05	95,95,115	0.0	0.0	0.0	0,0,0
396	0.04	0.11	0.04	95,95,115	0.0	0.0	0.0	0,0,0
397	0.05	0.12	0.05	95,95,115	0.0	0.0	0.0	0,0,0
400	0.06	0.14	0.06	95,95,113	0.0	0.0	0.0	0,0,0
401	0.06	0.16	0.06	93,95,115	0.0	0.0	0.0	0,0,0
402	0.06	0.17	0.06	93,93,113	0.0	0.0	0.0	0,0,0
403	0.05	0.17	0.05	93,93,113	0.0	0.0	0.0	0,0,0
404	0.05	0.12	0.04	93,95,113	0.0	0.0	0.0	0,0,0
407	0.06	0.18	0.05	93,93,113	0.0	0.0	0.0	0,0,0
408	0.06	0.18	0.06	93,93,113	0.0	0.0	0.0	0,0,0
409	0.07	0.21	0.06	93,93,113	0.0	0.0	0.0	0,0,0
410	0.07	0.22	0.07	93,93,113	0.0	0.0	0.0	0,0,0
411	0.07	0.21	0.07	93,93,113	0.0	0.0	0.0	0,0,0
421	0.07	0.19	0.07	93,93,113	0.0	0.0	0.0	0,0,0
422	0.06	0.17	0.06	93,93,113	0.0	0.0	0.0	0,0,0
423	0.05	0.15	0.05	93,94,113	0.0	0.0	0.0	0,0,0
424	0.04	0.12	0.04	93,96,113	0.0	0.0	0.0	0,0,0
425	0.03	0.10	0.03	93,96,113	0.0	0.0	0.0	0,0,0
428	0.04	0.10	0.04	93,93,113	0.0	0.0	0.0	0,0,0
429	0.05	0.14	0.05	93,93,113	0.0	0.0	0.0	0,0,0
430	0.06	0.17	0.07	93,93,113	0.0	0.0	0.0	0,0,0
431	0.08	0.20	0.08	93,93,113	0.0	0.0	0.0	0,0,0
432	0.09	0.23	0.09	93,93,113	0.0	0.0	0.0	0,0,0
435	0.09	0.25	0.09	93,94,113	0.0	0.0	0.0	0,0,0
436	0.09	0.29	0.10	93,94,113	0.0	0.0	0.0	0,0,0
437	0.11	0.30	0.11	94,94,114	0.0	0.0	0.0	0,0,0
438	0.06	0.15	0.05	93,93,113	0.0	0.0	0.0	0,0,0
439	0.12	0.27	0.13	94,94,114	0.0	0.0	0.0	0,0,0
454	0.11	0.24	0.12	93,93,113	0.0	0.0	0.0	0,0,0
455	0.15	0.32	0.18	94,94,114	0.0	0.0	0.0	0,0,0

Viale Duca Alessandro n. 11 – 43123 Parma
Cell. 335 1403156 – E mail ing.concari@gmail.com
Sito web: studioaire.it – P.IVA 02561480340

456	0.19	0.41	0.22	94,94,114	0.0	0.0	0.0	0,0,0
457	0.21	0.45	0.25	94,94,114	0.0	0.0	0.0	0,0,0
458	0.22	0.46	0.26	94,94,114	0.0	0.0	0.0	0,0,0
459	0.22	0.46	0.26	94,94,114	0.0	0.0	0.0	0,0,0
460	0.21	0.45	0.25	94,94,114	0.0	0.0	0.0	0,0,0
461	0.20	0.42	0.24	94,94,114	0.0	0.0	0.0	0,0,0
462	0.18	0.37	0.21	94,94,114	0.0	0.0	0.0	0,0,0
463	0.15	0.30	0.17	94,93,114	0.0	0.0	0.0	0,0,0
464	0.11	0.21	0.12	93,93,113	0.0	0.0	0.0	0,0,0
465	0.08	0.16	0.09	93,93,113	0.0	0.0	0.0	0,0,0
466	0.13	0.31	0.14	93,93,113	0.0	0.0	0.0	0,0,0
467	0.12	0.27	0.13	93,93,113	0.0	0.0	0.0	0,0,0
468	0.12	0.26	0.13	93,93,113	0.0	0.0	0.0	0,0,0
469	0.11	0.21	0.11	93,93,116	0.0	0.0	0.0	0,0,0
470	0.09	0.15	0.11	96,93,116	0.0	0.0	0.0	0,0,0
471	0.10	0.15	0.12	96,96,116	0.0	0.0	0.0	0,0,0
472	0.10	0.17	0.12	96,96,116	0.0	0.0	0.0	0,0,0
473	0.11	0.18	0.13	96,96,116	0.0	0.0	0.0	0,0,0
474	0.11	0.20	0.13	96,94,116	0.0	0.0	0.0	0,0,0
475	0.10	0.20	0.12	94,94,114	0.0	0.0	0.0	0,0,0
476	0.10	0.22	0.11	94,94,114	0.0	0.0	0.0	0,0,0
477	0.11	0.25	0.11	93,93,113	0.0	0.0	0.0	0,0,0
478	0.14	0.33	0.15	94,93,114	0.0	0.0	0.0	0,0,0
479	0.15	0.34	0.16	93,93,113	0.0	0.0	0.0	0,0,0
480	0.15	0.34	0.16	93,93,113	0.0	0.0	0.0	0,0,0
481	0.14	0.32	0.15	93,93,113	0.0	0.0	0.0	0,0,0
482	0.13	0.28	0.14	93,93,113	0.0	0.0	0.0	0,0,0
483	0.11	0.25	0.12	93,93,113	0.0	0.0	0.0	0,0,0
484	0.11	0.24	0.11	93,93,113	0.0	0.0	0.0	0,0,0
485	0.11	0.24	0.12	93,93,113	0.0	0.0	0.0	0,0,0
486	0.11	0.24	0.12	93,93,113	0.0	0.0	0.0	0,0,0
487	0.11	0.23	0.11	93,93,113	0.0	0.0	0.0	0,0,0
488	0.11	0.24	0.12	94,94,114	0.0	0.0	0.0	0,0,0
489	0.14	0.33	0.16	94,93,114	0.0	0.0	0.0	0,0,0
490	0.14	0.35	0.15	94,94,114	0.0	0.0	0.0	0,0,0
491	0.16	0.38	0.17	94,94,114	0.0	0.0	0.0	0,0,0
492	0.17	0.41	0.18	93,93,113	0.0	0.0	0.0	0,0,0
493	0.17	0.40	0.18	93,93,113	0.0	0.0	0.0	0,0,0
494	0.16	0.38	0.17	93,93,113	0.0	0.0	0.0	0,0,0
495	0.15	0.36	0.16	93,93,113	0.0	0.0	0.0	0,0,0
496	0.14	0.33	0.15	93,93,113	0.0	0.0	0.0	0,0,0
497	0.14	0.32	0.15	93,93,113	0.0	0.0	0.0	0,0,0
498	0.13	0.30	0.14	93,93,113	0.0	0.0	0.0	0,0,0
499	0.12	0.26	0.12	93,93,113	0.0	0.0	0.0	0,0,0
500	0.11	0.25	0.13	94,94,114	0.0	0.0	0.0	0,0,0
501	0.17	0.38	0.19	94,94,114	0.0	0.0	0.0	0,0,0
502	0.13	0.34	0.15	94,94,114	0.0	0.0	0.0	0,0,0
503	0.16	0.40	0.18	94,94,114	0.0	0.0	0.0	0,0,0
504	0.19	0.46	0.20	94,94,114	0.0	0.0	0.0	0,0,0
505	0.19	0.47	0.20	93,93,113	0.0	0.0	0.0	0,0,0
506	0.19	0.46	0.20	93,93,113	0.0	0.0	0.0	0,0,0
507	0.18	0.44	0.19	93,93,113	0.0	0.0	0.0	0,0,0
508	0.17	0.42	0.18	93,93,113	0.0	0.0	0.0	0,0,0
509	0.16	0.38	0.17	93,93,113	0.0	0.0	0.0	0,0,0
510	0.15	0.33	0.15	93,93,113	0.0	0.0	0.0	0,0,0
511	0.12	0.27	0.12	93,93,113	0.0	0.0	0.0	0,0,0
512	0.11	0.25	0.13	94,94,114	0.0	0.0	0.0	0,0,0
513	0.19	0.42	0.22	94,94,114	0.0	0.0	0.0	0,0,0
514	0.12	0.32	0.14	94,94,114	0.0	0.0	0.0	0,0,0
515	0.16	0.41	0.18	94,94,114	0.0	0.0	0.0	0,0,0
516	0.20	0.49	0.22	94,94,114	0.0	0.0	0.0	0,0,0
517	0.21	0.53	0.23	94,94,114	0.0	0.0	0.0	0,0,0
518	0.21	0.52	0.23	94,93,114	0.0	0.0	0.0	0,0,0
519	0.21	0.51	0.22	93,93,113	0.0	0.0	0.0	0,0,0
520	0.20	0.48	0.21	93,93,113	0.0	0.0	0.0	0,0,0
521	0.18	0.43	0.19	93,93,113	0.0	0.0	0.0	0,0,0
522	0.15	0.36	0.16	93,93,113	0.0	0.0	0.0	0,0,0
523	0.12	0.26	0.12	93,93,113	0.0	0.0	0.0	0,0,0
524	0.11	0.24	0.13	94,94,114	0.0	0.0	0.0	0,0,0
525	0.20	0.44	0.23	94,94,114	0.0	0.0	0.0	0,0,0
526	0.11	0.28	0.12	94,94,114	0.0	0.0	0.0	0,0,0
527	0.16	0.41	0.18	94,94,114	0.0	0.0	0.0	0,0,0
528	0.20	0.52	0.23	94,94,114	0.0	0.0	0.0	0,0,0
529	0.22	0.57	0.25	94,94,114	0.0	0.0	0.0	0,0,0
530	0.23	0.57	0.25	93,93,114	0.0	0.0	0.0	0,0,0
531	0.23	0.56	0.25	93,93,113	0.0	0.0	0.0	0,0,0
532	0.21	0.53	0.23	93,93,113	0.0	0.0	0.0	0,0,0
533	0.19	0.46	0.20	93,93,113	0.0	0.0	0.0	0,0,0
534	0.16	0.37	0.16	93,93,113	0.0	0.0	0.0	0,0,0
535	0.12	0.26	0.12	93,93,113	0.0	0.0	0.0	0,0,0
536	0.11	0.23	0.13	94,96,114	0.0	0.0	0.0	0,0,0
537	0.21	0.46	0.25	94,94,114	0.0	0.0	0.0	0,0,0
538	0.09	0.25	0.11	94,94,114	0.0	0.0	0.0	0,0,0
539	0.16	0.41	0.18	94,94,114	0.0	0.0	0.0	0,0,0
540	0.21	0.54	0.23	94,94,114	0.0	0.0	0.0	0,0,0
541	0.24	0.60	0.26	94,94,114	0.0	0.0	0.0	0,0,0
542	0.24	0.61	0.26	94,93,114	0.0	0.0	0.0	0,0,0
543	0.24	0.60	0.26	94,93,114	0.0	0.0	0.0	0,0,0
544	0.23	0.56	0.25	93,93,113	0.0	0.0	0.0	0,0,0
545	0.20	0.49	0.21	93,93,113	0.0	0.0	0.0	0,0,0
546	0.16	0.37	0.17	93,93,113	0.0	0.0	0.0	0,0,0
547	0.11	0.25	0.12	93,93,113	0.0	0.0	0.0	0,0,0
548	0.10	0.21	0.13	94,96,114	0.0	0.0	0.0	0,0,0
549	0.22	0.47	0.25	94,94,114	0.0	0.0	0.0	0,0,0
550	0.09	0.22	0.10	93,93,113	0.0	0.0	0.0	0,0,0
551	0.16	0.41	0.17	94,94,114	0.0	0.0	0.0	0,0,0
552	0.21	0.54	0.24	94,94,114	0.0	0.0	0.0	0,0,0
553	0.24	0.62	0.27	94,94,114	0.0	0.0	0.0	0,0,0

Viale Duca Alessandro n. 11 – 43123 Parma
Cell. 335 1403156 – E mail ing.concari@gmail.com
Sito web: studioaire.it – P.IVA 02561480340

554	0.25	0.63	0.27	94,93,114	0.0	0.0	0.0	0,0,0
555	0.25	0.62	0.27	94,93,114	0.0	0.0	0.0	0,0,0
556	0.24	0.58	0.25	93,93,113	0.0	0.0	0.0	0,0,0
557	0.21	0.50	0.22	93,93,113	0.0	0.0	0.0	0,0,0
558	0.16	0.37	0.17	93,93,113	0.0	0.0	0.0	0,0,0
559	0.11	0.23	0.11	93,93,113	0.0	0.0	0.0	0,0,0
560	0.10	0.19	0.13	94,96,114	0.0	0.0	0.0	0,0,0
561	0.22	0.48	0.26	94,94,114	0.0	0.0	0.0	0,0,0
562	0.09	0.23	0.10	93,93,113	0.0	0.0	0.0	0,0,0
563	0.15	0.40	0.17	94,94,114	0.0	0.0	0.0	0,0,0
564	0.22	0.55	0.24	94,94,114	0.0	0.0	0.0	0,0,0
565	0.25	0.62	0.27	94,94,114	0.0	0.0	0.0	0,0,0
566	0.25	0.63	0.28	94,94,114	0.0	0.0	0.0	0,0,0
567	0.25	0.62	0.28	94,94,114	0.0	0.0	0.0	0,0,0
568	0.24	0.58	0.26	93,93,113	0.0	0.0	0.0	0,0,0
569	0.21	0.50	0.22	93,93,113	0.0	0.0	0.0	0,0,0
570	0.16	0.37	0.17	93,93,113	0.0	0.0	0.0	0,0,0
571	0.10	0.21	0.10	93,93,113	0.0	0.0	0.0	0,0,0
572	0.10	0.17	0.12	94,96,114	0.0	0.0	0.0	0,0,0
573	0.22	0.48	0.26	94,94,114	0.0	0.0	0.0	0,0,0
574	0.09	0.23	0.10	93,93,113	0.0	0.0	0.0	0,0,0
575	0.16	0.39	0.18	94,94,114	0.0	0.0	0.0	0,0,0
576	0.22	0.55	0.24	94,94,114	0.0	0.0	0.0	0,0,0
577	0.25	0.62	0.27	94,94,114	0.0	0.0	0.0	0,0,0
578	0.25	0.63	0.28	94,94,114	0.0	0.0	0.0	0,0,0
579	0.25	0.62	0.28	94,94,114	0.0	0.0	0.0	0,0,0
580	0.24	0.58	0.26	93,93,113	0.0	0.0	0.0	0,0,0
581	0.21	0.50	0.22	93,93,113	0.0	0.0	0.0	0,0,0
582	0.16	0.37	0.17	93,93,113	0.0	0.0	0.0	0,0,0
583	0.10	0.20	0.10	93,93,113	0.0	0.0	0.0	0,0,0
584	0.10	0.19	0.13	94,96,114	0.0	0.0	0.0	0,0,0
585	0.22	0.49	0.26	94,94,114	0.0	0.0	0.0	0,0,0
586	0.09	0.24	0.10	93,93,113	0.0	0.0	0.0	0,0,0
587	0.16	0.39	0.18	94,94,114	0.0	0.0	0.0	0,0,0
588	0.22	0.54	0.24	94,94,114	0.0	0.0	0.0	0,0,0
589	0.24	0.61	0.27	94,94,114	0.0	0.0	0.0	0,0,0
590	0.25	0.62	0.27	94,94,114	0.0	0.0	0.0	0,0,0
591	0.25	0.61	0.27	94,94,114	0.0	0.0	0.0	0,0,0
592	0.23	0.57	0.25	93,93,113	0.0	0.0	0.0	0,0,0
593	0.21	0.49	0.22	93,93,113	0.0	0.0	0.0	0,0,0
594	0.16	0.36	0.17	93,93,113	0.0	0.0	0.0	0,0,0
595	0.11	0.22	0.11	93,93,113	0.0	0.0	0.0	0,0,0
596	0.11	0.21	0.13	94,96,114	0.0	0.0	0.0	0,0,0
597	0.22	0.50	0.26	94,94,114	0.0	0.0	0.0	0,0,0
598	0.10	0.24	0.11	94,93,114	0.0	0.0	0.0	0,0,0
599	0.17	0.39	0.19	94,94,114	0.0	0.0	0.0	0,0,0
600	0.21	0.52	0.24	94,94,114	0.0	0.0	0.0	0,0,0
601	0.24	0.59	0.27	94,94,114	0.0	0.0	0.0	0,0,0
602	0.24	0.60	0.27	94,94,114	0.0	0.0	0.0	0,0,0
603	0.24	0.59	0.27	94,94,114	0.0	0.0	0.0	0,0,0
604	0.23	0.54	0.25	94,93,114	0.0	0.0	0.0	0,0,0
605	0.20	0.46	0.21	93,93,113	0.0	0.0	0.0	0,0,0
606	0.16	0.35	0.16	93,93,113	0.0	0.0	0.0	0,0,0
607	0.11	0.24	0.12	93,93,113	0.0	0.0	0.0	0,0,0
608	0.11	0.24	0.14	94,94,114	0.0	0.0	0.0	0,0,0
609	0.22	0.50	0.26	94,94,114	0.0	0.0	0.0	0,0,0
610	0.12	0.26	0.13	94,93,114	0.0	0.0	0.0	0,0,0
611	0.17	0.39	0.19	94,94,114	0.0	0.0	0.0	0,0,0
612	0.21	0.51	0.24	94,94,114	0.0	0.0	0.0	0,0,0
613	0.23	0.56	0.26	94,94,114	0.0	0.0	0.0	0,0,0
614	0.23	0.55	0.26	94,94,114	0.0	0.0	0.0	0,0,0
615	0.23	0.55	0.25	94,94,114	0.0	0.0	0.0	0,0,0
616	0.21	0.50	0.23	94,93,114	0.0	0.0	0.0	0,0,0
617	0.18	0.43	0.20	93,93,113	0.0	0.0	0.0	0,0,0
618	0.15	0.34	0.16	93,93,113	0.0	0.0	0.0	0,0,0
619	0.12	0.25	0.12	93,93,113	0.0	0.0	0.0	0,0,0
620	0.12	0.27	0.14	94,94,114	0.0	0.0	0.0	0,0,0
621	0.22	0.50	0.26	94,94,114	0.0	0.0	0.0	0,0,0
622	0.14	0.30	0.15	94,93,114	0.0	0.0	0.0	0,0,0
623	0.17	0.39	0.19	94,94,114	0.0	0.0	0.0	0,0,0
624	0.20	0.48	0.23	94,94,114	0.0	0.0	0.0	0,0,0
625	0.22	0.52	0.24	94,94,114	0.0	0.0	0.0	0,0,0
626	0.22	0.51	0.24	94,94,114	0.0	0.0	0.0	0,0,0
627	0.21	0.49	0.23	94,94,114	0.0	0.0	0.0	0,0,0
628	0.19	0.43	0.21	94,93,114	0.0	0.0	0.0	0,0,0
629	0.17	0.38	0.18	93,93,113	0.0	0.0	0.0	0,0,0
630	0.15	0.33	0.15	93,93,113	0.0	0.0	0.0	0,0,0
631	0.12	0.26	0.12	93,93,113	0.0	0.0	0.0	0,0,0
632	0.13	0.29	0.15	94,94,114	0.0	0.0	0.0	0,0,0
633	0.21	0.50	0.25	94,94,114	0.0	0.0	0.0	0,0,0
634	0.14	0.32	0.16	94,93,114	0.0	0.0	0.0	0,0,0
635	0.17	0.38	0.19	94,94,114	0.0	0.0	0.0	0,0,0
636	0.19	0.44	0.21	94,94,114	0.0	0.0	0.0	0,0,0
637	0.20	0.46	0.22	94,94,114	0.0	0.0	0.0	0,0,0
638	0.20	0.46	0.22	94,94,114	0.0	0.0	0.0	0,0,0
639	0.19	0.42	0.21	94,94,114	0.0	0.0	0.0	0,0,0
640	0.16	0.34	0.17	94,93,114	0.0	0.0	0.0	0,0,0
641	0.14	0.32	0.15	93,93,113	0.0	0.0	0.0	0,0,0
642	0.13	0.30	0.14	93,93,113	0.0	0.0	0.0	0,0,0
643	0.12	0.25	0.12	93,93,113	0.0	0.0	0.0	0,0,0
644	0.14	0.30	0.16	94,94,114	0.0	0.0	0.0	0,0,0
645	0.20	0.48	0.23	94,94,114	0.0	0.0	0.0	0,0,0
Guscio	**rRfck**	**rRfyk**	**rPfck**		**wR**	**wF**	**wP**	
	0.25	0.63	0.28		0.0	0.0	0.0	

Viale Duca Alessandro n. 11 – 43123 Parma
Cell. 335 1403156 – E mail ing.concari@gmail.com
Sito web: studioaire.it – P.IVA 02561480340

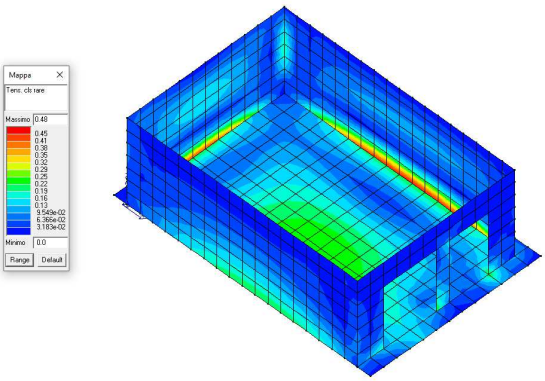

Verifica SLE – tensioni cls in cond.rare

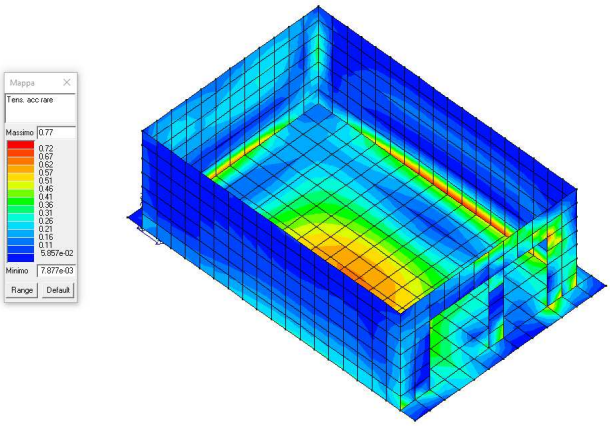

Verifica SLE – tensioni acciaio in cond.rare

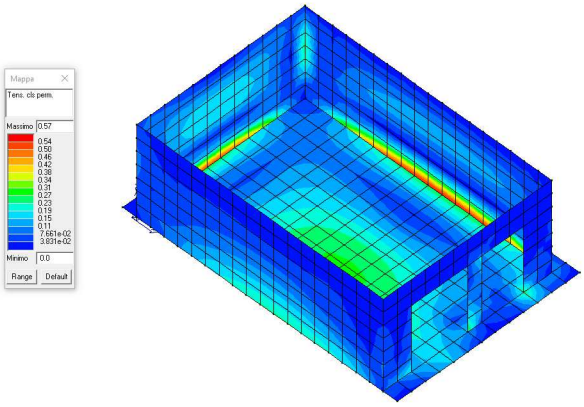

Verifica SLE – tensioni cls in cond.perm.

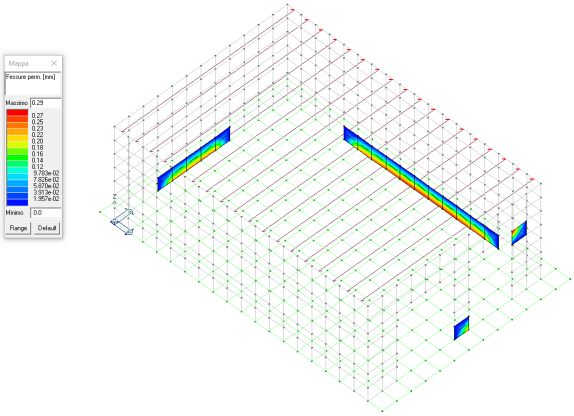

Verifica SLE – fessurazioni verificate in cond.rare/freq./perm.

Viale Duca Alessandro n. 11 – 43123 Parma
Cell. 335 1403156 – E mail ing.concari@gmail.com
Sito web: studioaire.it – P.IVA 02561480340

2.5 – SCHEDA GRADINI

Si riporta di seguito la scheda tecnica di dimensionamento del grigliato per i ballatoi e per i gradini.

Devono garantire di progetto la resistenza ad un carico d'esercizio applicato pari a 400daN/m^2, più il peso proprio.

GRIGLIATO ELETTROSALDATO

ELECTROWELDED GRATING

Portate

Loading tables

Maglia Pitch	Piatto Bearing bar	Distanza netta tra gli appoggi (mm) - *Clear span (mm)*												
		300	400	500	600	700	800	900	1000	1200	1400	1600	1800	2000
15x76	20 x 2	12.000	7.000	4.500	3.100	2.000	1.400	950	700					
	25 x 2	19.000	11.000	7.000	4.900	3.600	2.700	1.800	1.300	800				
	30 x 2	28.000	15.000	10.000	7.000	5.000	3.900	3.100	2.400	1.400	750			
	40 x 2	50.000	28.000	18.000	12.000	9.000	7.000	5.500	4.500	3.100	1.800	1.000	650	
	25 x 3	29.000	16.000	10.000	7.000	5.000	4.000	2.800	2.100	1.200	650			
	30 x 3	42.000	23.000	15.000	10.000	7.500	5.500	4.700	3.600	2.100	1.100	650		
	40 x 3	75.000	42.000	27.000	18.000	13.000	10.000	8.000	6.500	4.700	2.700	1.500	950	650
	50 x 3	118.000	66.000	42.000	29.000	21.000	16.000	13.000	10.000	7.000	5.000	3.100	1.900	1.200
21x38 21x76	25 x 2	13.000	7.500	4.800	3.300	2.400	1.800	1.300	950					
	25 x 3	20.000	11.000	7.000	5.000	3.700	2.800	1.900	1.400	800				
	30 x 3	29.000	16.000	10.000	7.000	5.000	4.000	3.200	2.400	1.400	750			
	40 x 3	50.000	28.000	17.000	12.000	9.000	7.000	5.500	4.500	3.200	1.800	1.000	650	
25x25 25x38 25x76	20 x 2	7.500	4.200	2.700	1.800	1.200	850							
	25 x 2	11.000	6.500	4.200	2.900	2.100	1.600	1.100	800					
	30 x 2	16.000	9.000	6.000	4.000	3.000	2.200	1.700	1.400	800				
	25 x 3	17.000	9.500	6.000	4.400	3.200	2.400	1.700	1.200	700				
	30 x 3	25.000	14.000	9.000	6.000	4.600	3.500	2.800	2.100	1.200	650			
	40 x 3	45.000	25.000	16.000	11.000	8.000	6.000	5.000	4.000	2.800	1.600	950		
	40 x 4	58.000	33.000	20.000	14.000	10.000	8.000	6.000	5.000	3.500	2.000	1.200	700	
	50 x 4	94.000	53.000	34.000	23.000	17.000	13.000	10.000	8.500	5.500	4.200	2.400	1.500	1.000
	60 x 4	136.000	76.000	49.000	34.000	25.000	19.000	15.000	12.000	8.500	6.000	4.200	2.600	1.700
	70 x 4	185.000	104.000	66.000	46.000	34.000	26.000	20.000	16.000	11.000	8.500	6.500	4.200	2.700
30x50 30x100	25 x 3	14.000	8.000	5.000	3.600	2.700	2.000	1.400	1.000	600				
	30 x 3	21.000	11.000	7.500	5.000	3.900	2.900	2.300	1.800	1.000				
	40 x 3	36.000	20.000	13.000	9.000	6.500	5.000	4.000	3.200	2.200	1.300	750		
	40 x 4	50.000	28.000	18.000	12.000	9.000	7.000	5.500	4.500	3.100	1.800	1.000	650	
	25 x 5	22.000	12.000	8.000	6.000	4.500	3.300	2.300	1.700	1.000	600			
	30 x 5	35.000	19.000	12.000	8.000	6.000	4.500	3.500	3.000	1.700	900			
	40 x 5	63.000	35.000	22.000	15.000	11.000	8.000	7.000	5.500	3.900	2.200	1.300	800	
34x38 34x50 34x76 34x100	25 x 2	8.500	4.500	3.100	2.100	1.500	1.200	850	600					
	30 x 2	12.000	7.000	4.500	3.100	2.200	1.700	1.300	1.000	600				
	40 x 2	22.000	12.000	8.000	5.500	4.000	3.100	2.400	1.900	1.300	700			
	25 x 3	13.000	7.000	4.700	3.200	2.300	1.800	1.200	900					
	30 x 3	18.000	10.000	6.500	4.700	3.400	2.600	2.000	1.600	900				
	40 x 3	33.000	18.000	12.000	8.000	6.000	4.700	3.700	3.000	2.000	1.100	700		
	40 x 4	44.000	25.000	16.000	11.000	8.000	6.000	4.900	4.000	2.700	1.500	900		
	50 x 4	61.000	39.000	25.000	17.000	12.000	9.000	7.000	6.000	4.300	3.100	1.700	1.100	700
	60 x 4	10.000	56.000	36.000	25.000	18.000	14.000	11.000	9.000	6.000	4.600	3.500	1.900	1.200
	25 x 5	21.000	12.000	7.800	5.400	3.400	3.000	2.100	1.500	800				
	30 x 5	31.000	17.000	11.000	7.500	5.500	4.400	3.400	2.600	1.500	800			
	40 x 5	55.000	31.000	20.000	13.000	10.000	7.000	6.000	5.000	3.400	1.900	1.100	700	
41x100 41x50	20 x 3	6.000	3.800	2.400	1.700	1.100	700							
	25 x 3	10.000	6.000	3.800	2.700	1.800	1.500	1.000	700					
	30 x 3	15.000	8.000	5.600	3.800	2.800	2.100	1.700	1.300	700				
	40 x 3	27.000	15.000	9.000	6.000	5.000	3.800	3.000	2.400	1.700	900			
	25 x 5	18.000	10.000	6.000	4.500	3.300	2.400	1.700	1.200	700				
	30 x 5	25.000	14.000	9.000	6.000	4.500	3.500	2.800	2.100	1.200	650			
	40 x 5	46.000	26.000	16.000	11.000	8.000	6.000	5.000	4.000	2.800	1.600	900		

PORTATA 1
LOAD

Portata pedonale kg 600 su "mq"

Pedestrian access 600 kg/m² distributed

8

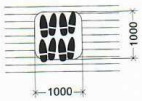

Le seguenti tabelle sono valide esclusivamente per piatti piani. In caso di piatti dentellati calcolare la portata mediante la tabella di conversione a lato.

Following loading tables can be applied to plain gratings only, for serrated grating refer to the conversion table

Tabella di conversione - *Conversion table*

H Piatto *H Plain*	Portata Piano *Plain*	Portata Dentellato *Serrated*
h 30	100 %	81 %
h 40	100 %	85 %
h 50	100 %	88 %

Valida per tutti gli spessori del piatto
Table valid for all bearing bars thicknesses

Viale Duca Alessandro n. 11 – 43123 Parma
Cell. 335 1403156 – E mail ing.concari@gmail.com
Sito web: studioaire.it – P.IVA 02561480340

Si evince dalla tabella, che per il grigliato scelto 15x76 con piatto 30x3, presenta un carico massimo ammissibile per un elemento disposto con appoggi distanti 120cm, pari a 2100daN/m^2.

Pertanto il grigliato scelto risulta abbondantemente sufficiente in relazione al carico portato di 400daN/m^2, pari al 19% del carico massimo dichiarato dal produttore. Anche utilizzando i coeff.amplificativi dei carichi per lo SLU, si ottiene comunque un carico ammissibile assai superiore al carico amplificato, che risulterebbe pari a 400x1,5= 600daN/m^2, corrispondente al 28,6% del carico massimo.

A seguito della futura consegna del materiale in cantiere, sarà prodotta apposita certificazione del materiale.

Particolari tecnici / *Specifications*

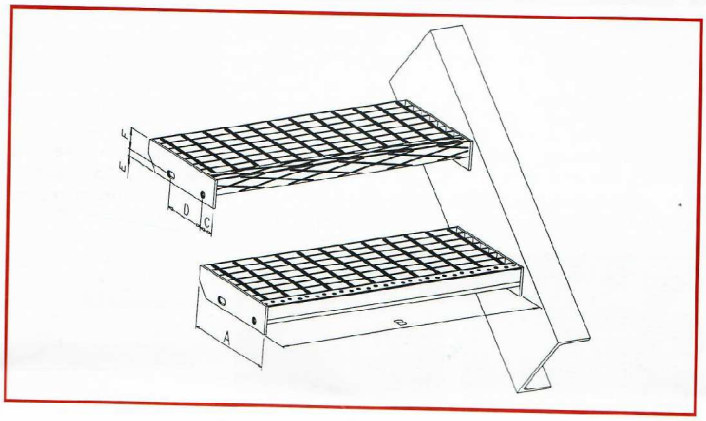

Gradini completi in grigliato elettroforgiato, tipo a bullonare, ZINCATI
Electrowelded grating treads, bolted type, GALVANIZED

Maglia *Pitch*	Piatto portante *Bearing bar* HxS	Lunghezza *Width* B (mm)	Pedata *Depth* A (mm)	Forature *Holes* D (mm)	Peso *Weight* Kg/cad.	Destinazione d'uso *Recomended use*
15x76	30x2	1.200	318	120	13,7	PU
	25x3 dentellato *serrated*	1.200	318	120	16,3	PU
	25x3 dentellato *serrated*	1.200	318	120	19,1	PU
	25x2	1.200	318	120	11,9	PP
21x76	25x2	600	236	120	4,1	PS
		700	236	120	4,7	PS
		800	277	120	6,2	PP
		900	277	120	6,8	PP
		1.000	277	120	7,5	PP
25x76	25x2	600	205	115	3,2	
		700	255	180	4,5	
		800	255	180	5	
		900	255	180	5,6	
		1.000	305	180	7,2	

LEGENDA

Maglia 15 e 25 *Pitch* — Distanziale in tondo liscio *Round cross wire*

Maglia 21 *Pitch* — Distanziale in quadro ritorto *Square twisted c. wire*

- — Rompitratta in lamiera forata
Opzionale in lamiera striata
Nosing made of perforated steel available also with chequered plate

D 125 *(mm)*
E 15 *(mm)*
F 45 *(mm)*
C 90 *(mm)*
Per A>250 mm terzo foro con asola da 30x14 mm a Di=180 mm
For A>250 mm third slotted hole 30x14 mm dimension at Di=180 mm

Destinazione d'uso/*Recomanded use*
PU Pubblico/*Public areas*
PP Privato principale/*Private areas*
PS Privato secondario/*Residential areas*

Viale Duca Alessandro n. 11 – 43123 Parma
Cell. 335 1403156 – E mail ing.concari@gmail.com
Sito web: studioaire.it – P.IVA 02561480340

2.6 – VERIFICA DELLE CONNESSIONI

Si riportano di seguito le verifiche eseguite per i nodi e le connessioni della struttura.

SCALA ANTINCENDIO

1. Collegamento pilastri-fondazione;
2. Collegamento cosciali-fondazione;
3. Collegamento cosciale su travi orizzontali;
4. Collegamento travi orizzontali – pilastri di ballatoio intermedi;
5. Collegamento travi orizzontali – pilastri esterni ultimo ballatoio;
6. Collegamento travi orizzontali – pilastri intermedi ultimo ballatoio;
7. Collegamento travi UPN di chiusura dei ballatoi;
8. Collegamento travi UPN ultimo ballatoio;
9. Collegamento gradini su cosciali;
10. Collegamento montante parapetto.

VANO ASCENSORE

11. Collegamento pilastri-fondazione;
12. Collegamento pilastri-pilastri;
13. Collegamento travi orizzontali – pilastri (frontali);
14. Collegamento travi orizzontali – pilastri (laterali);

TABULATI DI CALCOLO DELLE CONNESSIONI

NODO 6: collegamento pilastri-fondazione

Viene dimensionato il collegamento tra il pilastro maggiormente sollecitato e la fondazione e si assegna lo stesso tipo di collegamento alle connessioni tra gli altri pilastri (meno sollecitati) e la fondazione: nodi 1,2,5.

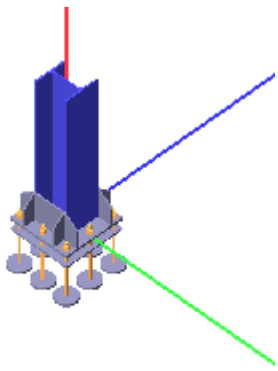

Coefficienti di sicurezza utilizzati
g_{M0} = 1.05

Viale Duca Alessandro n. 11 – 43123 Parma
Cell. 335 1403156 – E mail ing.concari@gmail.com
Sito web: studioaire.it – P.IVA 02561480340

g_{M1} = 1.10
g_{M2} = 1.25

Colonna
Tipo di profilo: HEA 200
Materiale: Acciaio S275 f_y = 275 N/mm^2 f_t = 430 N/mm^2 g_{ov} = 1.25
Classe sezione: 1

Flangia:
Materiale: Acciaio S275 f_y = 275 N/mm^2 f_t = 430 N/mm^2 g_{ov} = 1.25
Dimensioni (B x H x Sp): 350.0 x 350.0 x 15.0 mm
Spessore nervature verticali: 10.0 mm
Spessore nervature orizzontali: 10.0 mm

Bullonature:
Viti cl. 8.8 Dadi 8 o 10 (f_{yb} = 640 N/mm^2, f_{tb} = 800 N/mm^2)
Diametro gambo Ø = 16 mm A_{res} = 156.8 mm^2 (ridotta per filettatura)
Diametro dado/testa d_m = 24 mm
Diametro foro $Ø_0$ = 17 mm

Rigidezza giunto (calcolata secondo EN 1993-1-8 : 2005 par. 6.3):
$S_{j,ini}$ non calcolabile

Saldature:
Materiale: Acciaio S275 f_y = 275 N/mm^2 f_t = 430 N/mm^2 b_1 = 0.70 b_2 = 0.85
Spessore cordoni d'angolo s_c = 10 mm

Sollecitazioni:

Nodo.CMB	V2 [N]	V3 [N]	N [N]	M2 [N mm]	M3 [N mm]	T [N mm]
6.1	-3453.5	-485.9	-18348.2	530229.0	3917000.0	1999.0
6.2	-3453.5	-485.9	-18348.2	530229.0	3917000.0	1999.0
6.3	4738.9	811.9	-18725.8	-1097000.0	-4751000.0	-1947.0
6.4	4738.9	811.9	-18725.8	-1097000.0	-4751000.0	-1947.0
6.5	-1435.2	121.3	-69845.2	-488054.0	2663000.0	2012.0
6.6	-1435.2	121.3	-69845.2	-488054.0	2663000.0	2012.0
6.7	6757.2	1419.2	-70222.8	-2115000.0	-6004000.0	-1934.0
6.8	6757.2	1419.2	-70222.8	-2115000.0	-6004000.0	-1934.0
6.9	-3601.9	-523.5	-14070.5	595637.0	4013000.0	1993.0
6.10	-3601.9	-523.5	-14070.5	595637.0	4013000.0	1993.0
6.11	4590.6	774.3	-14448.0	-1032000.0	-4654000.0	-1953.0
6.12	4590.6	774.3	-14448.0	-1032000.0	-4654000.0	-1953.0
6.13	-1583.5	83.7	-65567.5	-422646.0	2760000.0	2005.0
6.14	-1583.5	83.7	-65567.5	-422646.0	2760000.0	2005.0
6.15	6608.9	1381.5	-65945.0	-2050000.0	-5908000.0	-1940.0
6.16	6608.9	1381.5	-65945.0	-2050000.0	-5908000.0	-1940.0
6.17	-6184.4	-918.5	-18222.4	1073000.0	6806000.0	3314.0
6.18	-6184.4	-918.5	-18222.4	1073000.0	6806000.0	3314.0
6.19	7469.7	1244.5	-18851.6	-1640000.0	-7640000.0	-3262.0
6.20	7469.7	1244.5	-18851.6	-1640000.0	-7640000.0	-3262.0
6.21	-4771.5	-493.4	-54270.3	359873.0	5928000.0	3323.0
6.22	-4771.5	-493.4	-54270.3	359873.0	5928000.0	3323.0
6.23	8882.6	1669.6	-54899.5	-2352000.0	-8517000.0	-3253.0
6.24	8882.6	1669.6	-54899.5	-2352000.0	-8517000.0	-3253.0
6.25	-6332.7	-956.1	-13944.6	1138000.0	6902000.0	3308.0
6.26	-6332.7	-956.1	-13944.6	1138000.0	6902000.0	3308.0
6.27	7321.4	1206.9	-14573.8	-1574000.0	-7544000.0	-3268.0
6.28	7321.4	1206.9	-14573.8	-1574000.0	-7544000.0	-3268.0
6.29	-4919.8	-531.1	-49992.5	425280.0	6025000.0	3317.0
6.30	-4919.8	-531.1	-49992.5	425280.0	6025000.0	3317.0
6.31	8734.2	1632.0	-50621.7	-2287000.0	-8421000.0	-3259.0
6.32	8734.2	1632.0	-50621.7	-2287000.0	-8421000.0	-3259.0
6.33	-2040.7	-60.8	-54396.1	-182569.0	3039000.0	2008.0
6.34	-2040.7	-60.8	-54396.1	-182569.0	3039000.0	2008.0
6.35	6151.7	1237.0	-54773.7	-1810000.0	-5628000.0	-1938.0
6.36	6151.7	1237.0	-54773.7	-1810000.0	-5628000.0	-1938.0
6.37	-2189.0	-98.5	-50118.4	-117161.0	3136000.0	2002.0
6.38	-2189.0	-98.5	-50118.4	-117161.0	3136000.0	2002.0
6.39	6003.4	1199.4	-50495.9	-1744000.0	-5532000.0	-1944.0
6.40	6003.4	1199.4	-50495.9	-1744000.0	-5532000.0	-1944.0
6.41	10.8	-534.4	-22756.0	719077.0	-266302.0	1074.0
6.42	10.8	-534.4	-22756.0	719077.0	-266302.0	1074.0
6.43	8203.2	763.5	-23133.5	-908249.0	-8934000.0	-2872.0
6.44	8203.2	763.5	-23133.5	-908249.0	-8934000.0	-2872.0
6.45	2029.1	72.9	-74253.0	-299206.0	-1519000.0	1086.0
6.46	2029.1	72.9	-74253.0	-299206.0	-1519000.0	1086.0
6.47	10221.6	1370.7	-74630.5	-1927000.0	-10190000.0	-2860.0
6.48	10221.6	1370.7	-74630.5	-1927000.0	-10190000.0	-2860.0
6.49	-137.5	-572.0	-18478.2	784485.0	-170055.0	1068.0
6.50	-137.5	-572.0	-18478.2	784485.0	-170055.0	1068.0
6.51	8054.9	725.8	-18855.7	-842841.0	-8837000.0	-2878.0
6.52	8054.9	725.8	-18855.7	-842841.0	-8837000.0	-2878.0
6.53	1880.8	35.3	-69975.2	-233798.0	-1423000.0	1080.0
6.54	1880.8	35.3	-69975.2	-233798.0	-1423000.0	1080.0
6.55	10073.3	1333.1	-70352.7	-1861000.0	-10090000.0	-2866.0
6.56	10073.3	1333.1	-70352.7	-1861000.0	-10090000.0	-2866.0
6.57	-2720.0	-967.0	-22630.1	1262000.0	2623000.0	2389.0
6.58	-2720.0	-967.0	-22630.1	1262000.0	2623000.0	2389.0
6.59	10934.1	1196.1	-23259.3	-1451000.0	-11820000.0	-4187.0
6.60	10934.1	1196.1	-23259.3	-1451000.0	-11820000.0	-4187.0
6.61	-1307.2	-541.9	-58678.0	548721.0	1746000.0	2398.0
6.62	-1307.2	-541.9	-58678.0	548721.0	1746000.0	2398.0

Viale Duca Alessandro n. 11 – 43123 Parma
Cell. 335 1403156 – E mail ing.concari@gmail.com
Sito web: studioaire.it – P.IVA 02561480340

6.63	12346.9	1621.1	-59307.3	-2163000.0	-12700000.0	-4179.0
6.64	12346.9	1621.1	-59307.3	-2163000.0	-12700000.0	-4179.0
6.65	-2868.3	-1004.6	-18352.3	1327000.0	2719000.0	2383.0
6.66	-2868.3	-1004.6	-18352.3	1327000.0	2719000.0	2383.0
6.67	10785.8	1158.5	-18981.6	-1385000.0	-11730000.0	-4193.0
6.68	10785.8	1158.5	-18981.6	-1385000.0	-11730000.0	-4193.0
6.69	-1455.5	-579.5	-54400.3	614128.0	1842000.0	2392.0
6.70	-1455.5	-579.5	-54400.3	614128.0	1842000.0	2392.0
6.71	12198.6	1583.5	-55029.5	-2098000.0	-12600000.0	-4185.0
6.72	12198.6	1583.5	-55029.5	-2098000.0	-12600000.0	-4185.0
6.73	2320.4	-566.7	-25694.4	844975.0	-3055000.0	457.0
6.74	2320.4	-566.7	-25694.4	844975.0	-3055000.0	457.0
6.75	10512.8	731.2	-26072.0	-782350.0	-11720000.0	-3489.0
6.76	10512.8	731.2	-26072.0	-782350.0	-11720000.0	-3489.0
6.77	3733.2	-141.6	-61742.4	132177.0	-3932000.0	466.0
6.78	3733.2	-141.6	-61742.4	132177.0	-3932000.0	466.0
6.79	11925.6	1156.2	-62119.9	-1495000.0	-12600000.0	-3480.0
6.80	11925.6	1156.2	-62119.9	-1495000.0	-12600000.0	-3480.0
6.81	2172.1	-604.3	-21416.7	910383.0	-2959000.0	451.0
6.82	2172.1	-604.3	-21416.7	910383.0	-2959000.0	451.0
6.83	10364.5	693.6	-21794.2	-716942.0	-11630000.0	-3495.0
6.84	10364.5	693.6	-21794.2	-716942.0	-11630000.0	-3495.0
6.85	3584.9	-179.2	-57464.6	197585.0	-3836000.0	459.0
6.86	3584.9	-179.2	-57464.6	197585.0	-3836000.0	459.0
6.87	11777.3	1118.6	-57842.1	-1430000.0	-12500000.0	-3486.0
6.88	11777.3	1118.6	-57842.1	-1430000.0	-12500000.0	-3486.0
6.89	1423.6	-109.3	-58803.9	6279.0	-1144000.0	1082.0
6.90	1423.6	-109.3	-58803.9	6279.0	-1144000.0	1082.0
6.91	9616.1	1188.5	-59181.4	-1621000.0	-9811000.0	-2863.0
6.92	9616.1	1188.5	-59181.4	-1621000.0	-9811000.0	-2863.0
6.93	1275.3	-146.9	-54526.1	71687.0	-1047000.0	1076.0
6.94	1275.3	-146.9	-54526.1	71687.0	-1047000.0	1076.0
6.95	9467.8	1150.9	-54903.6	-1556000.0	-9715000.0	-2869.0
6.96	9467.8	1150.9	-54903.6	-1556000.0	-9715000.0	-2869.0
6.97	-2302.8	1287.9	-23169.8	-1813000.0	3316000.0	4533.0
6.98	-2302.8	1287.9	-23169.8	-1813000.0	3316000.0	4533.0
6.99	5889.7	2585.7	-23547.4	-3441000.0	-5351000.0	588.0
6.100	5889.7	2585.7	-23547.4	-3441000.0	-5351000.0	588.0
6.101	-284.4	1895.2	-74666.8	-2832000.0	2063000.0	4546.0
6.102	-284.4	1895.2	-74666.8	-2832000.0	2063000.0	4546.0
6.103	7908.0	3193.0	-75044.4	-4459000.0	-6604000.0	600.0
6.104	7908.0	3193.0	-75044.4	-4459000.0	-6604000.0	600.0
6.105	-2451.1	1250.3	-18892.1	-1748000.0	3413000.0	4527.0
6.106	-2451.1	1250.3	-18892.1	-1748000.0	3413000.0	4527.0
6.107	5741.4	2548.1	-19269.6	-3375000.0	-5255000.0	582.0
6.108	5741.4	2548.1	-19269.6	-3375000.0	-5255000.0	582.0
6.109	-432.8	1857.5	-70389.1	-2766000.0	2159000.0	4540.0
6.110	-432.8	1857.5	-70389.1	-2766000.0	2159000.0	4540.0
6.111	7759.7	3155.4	-70766.6	-4394000.0	-6508000.0	594.0
6.112	7759.7	3155.4	-70766.6	-4394000.0	-6508000.0	594.0
6.113	-5033.6	855.3	-23044.0	-1271000.0	6205000.0	5849.0
6.114	-5033.6	855.3	-23044.0	-1271000.0	6205000.0	5849.0
6.115	8620.5	3018.3	-23673.2	-3983000.0	-8240000.0	-728.0
6.116	8620.5	3018.3	-23673.2	-3983000.0	-8240000.0	-728.0
6.117	-3620.8	1280.4	-59091.9	-1984000.0	5328000.0	5857.0
6.118	-3620.8	1280.4	-59091.9	-1984000.0	5328000.0	5857.0
6.119	10033.3	3443.4	-59721.1	-4696000.0	-9117000.0	-719.0
6.120	10033.3	3443.4	-59721.1	-4696000.0	-9117000.0	-719.0
6.121	-5181.9	817.7	-18766.2	-1205000.0	6302000.0	5843.0
6.122	-5181.9	817.7	-18766.2	-1205000.0	6302000.0	5843.0
6.123	8472.2	2980.7	-19395.4	-3918000.0	-8144000.0	-734.0
6.124	8472.2	2980.7	-19395.4	-3918000.0	-8144000.0	-734.0
6.125	-3769.1	1242.8	-54814.1	-1918000.0	5424000.0	5851.0
6.126	-3769.1	1242.8	-54814.1	-1918000.0	5424000.0	5851.0
6.127	9885.0	3405.8	-55443.4	-4630000.0	-9021000.0	-725.0
6.128	9885.0	3405.8	-55443.4	-4630000.0	-9021000.0	-725.0
6.129	-889.9	1713.0	-59217.7	-2526000.0	2439000.0	4542.0
6.130	-889.9	1713.0	-59217.7	-2526000.0	2439000.0	4542.0
6.131	7302.5	3010.8	-59595.3	-4153000.0	-6228000.0	596.0
6.132	7302.5	3010.8	-59595.3	-4153000.0	-6228000.0	596.0
6.133	-1038.3	1675.4	-54940.0	-2461000.0	2535000.0	4536.0
6.134	-1038.3	1675.4	-54940.0	-2461000.0	2535000.0	4536.0
6.135	7154.2	2973.2	-55317.5	-4088000.0	-6132000.0	590.0
6.136	7154.2	2973.2	-55317.5	-4088000.0	-6132000.0	590.0
6.137	-1535.6	2470.4	-26384.2	-3376000.0	2916000.0	6223.0
6.138	-1535.6	2470.4	-26384.2	-3376000.0	2916000.0	6223.0
6.139	6656.9	3768.3	-26761.8	-5003000.0	-5751000.0	2277.0
6.140	6656.9	3768.3	-26761.8	-5003000.0	-5751000.0	2277.0
6.141	-122.8	2895.5	-62432.1	-4089000.0	2039000.0	6232.0
6.142	-122.8	2895.5	-62432.1	-4089000.0	2039000.0	6232.0
6.143	8069.7	4193.3	-62809.7	-5716000.0	-6628000.0	2286.0
6.144	8069.7	4193.3	-62809.7	-5716000.0	-6628000.0	2286.0
6.145	-1683.9	2432.8	-22106.5	-3310000.0	3012000.0	6217.0
6.146	-1683.9	2432.8	-22106.5	-3310000.0	3012000.0	6217.0
6.147	6508.5	3730.7	-22484.0	-4938000.0	-5655000.0	2271.0
6.148	6508.5	3730.7	-22484.0	-4938000.0	-5655000.0	2271.0
6.149	-271.1	2857.9	-58154.4	-4023000.0	2135000.0	6226.0
6.150	-271.1	2857.9	-58154.4	-4023000.0	2135000.0	6226.0
6.151	7921.4	4155.7	-58531.9	-5650000.0	-6532000.0	2280.0
6.152	7921.4	4155.7	-58531.9	-5650000.0	-6532000.0	2280.0
6.153	14727.9	7188.1	-67559.0	3402000.0	-18870000.0	-7832.0
6.154	11113.2	2971.9	-56092.8	8582000.0	-14720000.0	-16031.0

Viale Duca Alessandro n. 11 – 43123 Parma
Cell. 335 1403156 – E mail ing.concari@gmail.com
Sito web: studioaire.it – P.IVA 02561480340

6.155	-8509.8	-2235.3	-13623.2	-9832000.0	13070000.0	16081.0
6.156	-12124.5	-6451.5	-2157.1	-4653000.0	17220000.0	7882.0
6.157	14585.0	6460.3	-68068.3	4112000.0	-18020000.0	-9591.0
6.158	11256.0	3699.6	-55583.5	7872000.0	-15560000.0	-14272.0
6.159	-8652.6	-2963.0	-14132.5	-9122000.0	13920000.0	14322.0
6.160	-11981.6	-5723.7	-1647.8	-5363000.0	16380000.0	9641.0
6.161	14445.2	-2452.8	-66104.7	4400000.0	-18000000.0	-11789.0
6.162	10830.5	-6669.0	-54638.6	9579000.0	-13850000.0	-19988.0
6.163	-8227.1	7405.5	-15077.5	-10830000.0	12210000.0	20038.0
6.164	-11841.8	3189.3	-3611.4	-5650000.0	16350000.0	11840.0
6.165	14302.4	-3180.5	-66614.0	5110000.0	-17160000.0	-13548.0
6.166	10973.4	-5941.2	-54129.2	8869000.0	-14690000.0	-18229.0
6.167	-8370.0	6677.8	-15586.8	-10120000.0	13050000.0	18280.0
6.168	-11699.0	3917.1	-3102.1	-6360000.0	15510000.0	13598.0
6.169	10811.8	8808.8	-62058.6	-7273000.0	-12530000.0	10102.0
6.170	-1237.1	-5245.2	-23838.2	9993000.0	1303000.0	-17226.0
6.171	3840.5	5981.8	-45877.8	-11240000.0	-2947000.0	17276.0
6.172	-8208.4	-8072.2	-7657.5	6022000.0	10890000.0	-10052.0
6.173	10727.0	5916.5	-61622.3	-6974000.0	-12270000.0	8915.0
6.174	-1321.9	-8137.5	-23401.9	10290000.0	1563000.0	-18413.0
6.175	3925.3	8874.0	-46314.1	-11540000.0	-3207000.0	18463.0
6.176	-8123.6	-5180.0	-8093.8	5723000.0	10620000.0	-8865.0
6.177	10335.7	6382.9	-63756.3	-4906000.0	-9718000.0	4241.0
6.178	-761.0	-2819.3	-22140.5	7625000.0	-1508000.0	-11364.0
6.179	3364.4	3555.9	-47575.6	-8876000.0	-135813.0	11415.0
6.180	-7732.3	-5646.4	-5959.7	3655000.0	8074000.0	-4191.0
6.181	10250.9	3490.7	-63320.0	-4606000.0	-9458000.0	3054.0
6.182	-845.8	-5711.6	-21704.2	7925000.0	-1248000.0	-12552.0
6.183	3449.2	6448.2	-48011.9	-9175000.0	-396431.0	12602.0
6.184	-7647.5	-2754.1	-6396.0	3356000.0	7813000.0	-3003.0

Calcolo resistenze

Resistenza a trazione dei bulloni $F_{tb,Rd} = 0.9 \bullet f_{tb} \bullet A_{res} / g_{M2} =$ 90333.1 N

Resistenza a punzonamento flangia $B_{pf,Rd} = 0.6 \bullet p \bullet d_m \bullet t_f \bullet f_{tk} / g_{M2} =$ 233432.9 N

Bull.	$F_{f,Rd}$ [N]	$F_{t,Rd}$ [N]
1	40111.4	40111.4
2	40019.2	40019.2
3	40111.4	40111.4
4	40071.4	40071.4
5	40071.4	40071.4
6	40111.4	40111.4
7	40019.2	40019.2
8	40111.4	40111.4

Legenda

$F_{f,Rd} = M_{res,m} / (B_m \bullet R_m)$ resistenza a flessione flangia

$F_{t,Rd} = \min [F_{tb,Rd} , B_{pf,Rd} , F_{f,Rd}]$ resistenza a trazione di progetto

Resistenza a taglio dei bulloni $F_{vb,Rd} = 0.6 \bullet f_{tb} \bullet A_{res} / g_{M2} =$ 60222.1 N

Bull.	$F_{bf,x,Rd}$ [N]	$F_{v,x,Rd}$ [N]	$F_{bf,y,Rd}$ [N]	$F_{v,y,Rd}$ [N]
1	121411.8	60222.1	121411.8	60222.1
2	121411.8	60222.1	206400.0	60222.1
3	121411.8	60222.1	121411.8	60222.1
4	206400.0	60222.1	121411.8	60222.1
5	206400.0	60222.1	121411.8	60222.1
6	121411.8	60222.1	121411.8	60222.1
7	121411.8	60222.1	206400.0	60222.1
8	121411.8	60222.1	121411.8	60222.1

Legenda

$F_{bf,x,Rd} = k \bullet a \bullet f_{tk} \bullet \varnothing \bullet t_f / g_{M2}$ resistenza a rifollamento flangia in direzione x

$F_{v,x,Rd} = \min [F_{vb,Rd} , F_{bf,x,Rd}]$ resistenza a taglio di progetto in direzione x

$F_{bf,y,Rd} = k \bullet a \bullet f_{tk} \bullet \varnothing \bullet t_f / g_{M2}$ resistenza a rifollamento flangia in direzione y

$F_{v,y,Rd} = \min [F_{vb,Rd} , F_{bf,y,Rd}]$ resistenza a taglio di progetto in direzione y

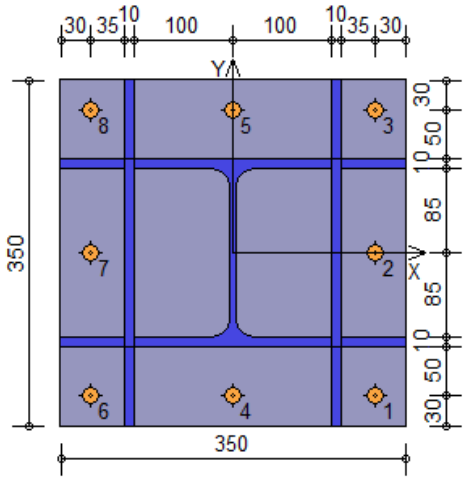

Verifiche sui bulloni

1-Taglio e trazione (Nodo n. 6, CMB n. 156)

Bull.	X [mm]	Y [mm]	$F_{v,Ed}$ [N]	$F_{v,Rd}$ [N]	$F_{t,Ed}$ [N]	$F_{t,Rd}$ [N]	FV_1	VER

Viale Duca Alessandro n. 11 – 43123 Parma
Cell. 335 1403156 – E mail ing.concari@gmail.com
Sito web: studioaire.it – P.IVA 02561480340

1	145.00	-145.00	1718.6	60222.1	15233.2	40111.4	0.299805	Ok
2	145.00	0.00	1720.8	60222.1	3148.2	40019.2	0.084765	Ok
3	145.00	145.00	1722.9	60222.1	0.0	40111.4	0.028609	Ok
4	0.00	-145.00	1714.6	60222.1	18067.1	40071.4	0.350524	Ok
5	0.00	145.00	1718.9	60222.1	0.0	40071.4	0.028543	Ok
6	-145.00	-145.00	1710.6	60222.1	20901.0	40111.4	0.400600	Ok
7	-145.00	0.00	1712.8	60222.1	8816.0	40019.2	0.185793	Ok
8	-145.00	145.00	1714.9	60222.1	0.0	40111.4	0.028476	Ok

2-Trazione (Nodo n. 6, CMB n. 156)

Bull.	X [mm]	Y [mm]	$F_{t,Ed}$ [N]	$F_{t,Rd}$ [N]	FV_2	VER
1	145.00	-145.00	15233.2	40111.4	0.379773	Ok
2	145.00	0.00	3148.2	40019.2	0.078668	Ok
3	145.00	145.00	0.0	40111.4	0.000000	Ok
4	0.00	-145.00	18067.1	40071.4	0.450872	Ok
5	0.00	145.00	0.0	40071.4	0.000000	Ok
6	-145.00	-145.00	20901.0	40111.4	0.521073	Ok
7	-145.00	0.00	8816.0	40019.2	0.220293	Ok
8	-145.00	145.00	0.0	40111.4	0.000000	Ok

Legenda

$F_{v,Ed}$ forza di taglio agente sul bullone
$F_{v,Rd}$ resistenza a taglio di progetto del bullone
$F_{t,Ed}$ forza di trazione agente sul bullone
$F_{t,Rd}$ resistenza a trazione di progetto del bullone
$FV_1 = F_{v,Ed} / F_{v,Rd} + F_{t,Ed} / (1.4 \bullet F_{t,Rd})$
$FV_2 = F_{t,Ed} / F_{t,Rd}$
VER ® $FV_i \leq 1$

Verifiche sulle saldature profilo-flangia (versione beta)

Si considera la sezione di gola (avente altezza $a = s_c / 2^{0.5} = 7.071$) in posizione ribaltata: vengono considerate positive le tensioni normali di trazione e le tensioni tangenziali agenti verso destra e verso il basso. Tutte le tensioni sono espresse in N/mm^2.

Verifica formula (4.2.84) (Nodo n. 6, CMB n. 153)

Cordoni	Lung.[mm]	$n_\wedge$	$t_\wedge$	$t_{\|\|}$	FV_1	VER_1
Nerv. verticale lato destro esterno	350.0	-21.55	0.00	1.35	21.59	Ok
Nerv. vert. lato destro interno zona inferiore	70.0	-21.86	0.00	1.35	21.90	Ok
Nerv. vert. lato sinistro interno zona inferiore	70.0	-25.32	0.00	1.35	25.36	Ok
Nerv. verticale lato sinistro esterno	350.0	-25.63	0.00	1.35	25.67	Ok
Nerv. orizz. inferiore lato destro esterno	55.0	-12.67	0.00	0.88	12.70	Ok
Ala inferiore esterno	200.0	-16.62	0.00	0.88	16.65	Ok
Nerv. orizz. inferiore lato sinistro esterno	55.0	-17.97	0.00	0.88	17.99	Ok
Nerv. orizz. inferiore lato destro interno	55.0	-10.71	0.00	0.88	10.75	Ok
Ala inferiore interno lato destro	78.8	-12.49	0.00	0.88	12.52	Ok
Ala inferiore interno lato sinistro	78.8	-14.67	0.00	0.88	14.69	Ok
Nerv. orizz. inferiore lato sinistro interno	55.0	-16.02	0.00	0.88	16.04	Ok
Nerv. vert. lato destro interno zona centrale	150.0	-10.40	0.00	1.35	10.48	Ok
Anima lato destro	134.0	-11.21	0.00	1.35	11.29	Ok
Anima lato sinistro	134.0	-11.21	0.00	1.35	11.29	Ok
Nerv. vert. lato sinistro interno zona centrale	150.0	-13.86	0.00	1.35	13.93	Ok
Nerv. orizz. superiore lato destro interno	55.0	8.95	0.00	0.88	8.99	Ok
Ala superiore interno lato destro	78.8	7.60	0.00	0.88	7.65	Ok
Ala superiore interno lato sinistro	78.8	5.42	0.00	0.88	5.49	Ok
Nerv. orizz. superiore lato sinistro interno	55.0	3.64	0.00	0.88	3.75	Ok
Nerv. orizz. superiore lato destro esterno	55.0	10.90	0.00	0.88	10.94	Ok
Ala superiore esterno	200.0	7.76	0.00	0.88	7.81	Ok
Nerv. orizz. superiore lato sinistro esterno	55.0	5.60	0.00	0.88	5.67	Ok
Nerv. vert. lato destro interno zona superiore	70.0	18.25	0.00	1.35	18.30	Ok
Nerv. vert. lato sinistro interno zona superiore	70.0	14.79	0.00	1.35	14.85	Ok

Verifica formula (4.2.85) (Nodo n. 6, CMB n. 153)

Cordoni	Lung.[mm]	$n_\wedge$	$t_\wedge$	$t_{\|\|}$	FV_2	VER_2
Nerv. verticale lato destro esterno	350.0	-21.55	0.00	1.35	21.55	Ok
Nerv. vert. lato destro interno zona inferiore	70.0	-21.86	0.00	1.35	21.86	Ok
Nerv. vert. lato sinistro interno zona inferiore	70.0	-25.32	0.00	1.35	25.32	Ok
Nerv. verticale lato sinistro esterno	350.0	-25.63	0.00	1.35	25.63	Ok
Nerv. orizz. inferiore lato destro esterno	55.0	-12.67	0.00	0.88	12.67	Ok
Ala inferiore esterno	200.0	-16.62	0.00	0.88	16.62	Ok
Nerv. orizz. inferiore lato sinistro esterno	55.0	-17.97	0.00	0.88	17.97	Ok
Nerv. orizz. inferiore lato destro interno	55.0	-10.71	0.00	0.88	10.71	Ok
Ala inferiore interno lato destro	78.8	-12.49	0.00	0.88	12.49	Ok
Ala inferiore interno lato sinistro	78.8	-14.67	0.00	0.88	14.67	Ok
Nerv. orizz. inferiore lato sinistro interno	55.0	-16.02	0.00	0.88	16.02	Ok
Nerv. vert. lato destro interno zona centrale	150.0	-10.40	0.00	1.35	10.40	Ok
Anima lato destro	134.0	-11.21	0.00	1.35	11.21	Ok
Anima lato sinistro	134.0	-11.21	0.00	1.35	11.21	Ok
Nerv. vert. lato sinistro interno zona centrale	150.0	-13.86	0.00	1.35	13.86	Ok
Nerv. orizz. superiore lato destro interno	55.0	8.95	0.00	0.88	8.95	Ok
Ala superiore interno lato destro	78.8	7.60	0.00	0.88	7.60	Ok
Ala superiore interno lato sinistro	78.8	5.42	0.00	0.88	5.42	Ok
Nerv. orizz. superiore lato sinistro interno	55.0	3.64	0.00	0.88	3.64	Ok
Nerv. orizz. superiore lato destro esterno	55.0	10.90	0.00	0.88	10.90	Ok
Ala superiore esterno	200.0	7.76	0.00	0.88	7.76	Ok
Nerv. orizz. superiore lato sinistro esterno	55.0	5.60	0.00	0.88	5.60	Ok
Nerv. vert. lato destro interno zona superiore	70.0	18.25	0.00	1.35	18.25	Ok
Nerv. vert. lato sinistro interno zona superiore	70.0	14.79	0.00	1.35	14.79	Ok

Legenda

$n_\wedge$ tensione normale perpendicolare all'asse del cordone
$t_\wedge$ tensione tangenziale perpendicolare all'asse del cordone
$t_{||}$ tensione tangenziale parallela all'asse del cordone
$FV_1 = (n_\wedge^2 + t_\wedge^2 + t_{||}^2)^{0.5}$
$FV_2 = ïn_\wedge ï + ït_\wedge ï$
VER_i ® $FV_i \leq b_i \bullet f_{yk}$ ($b_1 \bullet f_{yk} = 192.50\ N/mm^2$ $b_2 \bullet f_{yk} = 233.75\ N/mm^2$)

Verifiche a flessione piastra in zona compressa

Viale Duca Alessandro n. 11 – 43123 Parma
Cell. 335 1403156 – E mail ing.concari@gmail.com
Sito web: studioaire.it – P.IVA 02561480340

Sezione parallela a X a filo della colonna (Nodo n. 6, CMB n. 153)

Pressione media a bordo piastra	p_{med} = 4,28 N/mm^2
Carico lineare sbalzo q_{lin} = 1499,22 N/mm	
Lunghezza sbalzo L_s = 80,0 mm	
Modulo di resistenza minimo	W_{min} = 164828,5 mm^3
Momento resistente	$M_{p,Rd}$ = 43169360,0 N mm
Momento massimo	$M_{p,Ed}$ = 4797504,0 N mm

$M_{p,Ed}$ / $M_{p,Rd}$ = 0,111132 Ok

Sezione parallela a Y a filo della nervatura verticale (Nodo n. 6, CMB n. 167)

Pressione media a bordo piastra	p_{med} = 2,84 N/mm^2
Carico lineare sbalzo q_{lin} = 994,27 N/mm	
Lunghezza sbalzo L_s = 65,0 mm	
Modulo di resistenza minimo	W_{min} = 164828,5 mm^3
Momento resistente	$M_{p,Rd}$ = 43169360,0 N mm
Momento massimo	$M_{p,Ed}$ = 2100389,0 N mm

$M_{p,Ed}$ / $M_{p,Rd}$ = 0,048655 Ok

Verifica del momento di progetto del giunto (Nodo n. 6, CMB n. 159)

Momento resistente del giunto	$M_{j,Rd}$ =	32190300.0 N mm
Momento di progetto	$M_{j,Ed}$ =	12187410.0 N mm

$M_{j,Ed}$ / $M_{j,Rd}$ = 0.378605 Ok

Ancoraggio

Tirafondi con rosette saldate

Lunghezza tirafondi	L_t =	280 mm
Lunghezza di aderenza	L_a =	235 mm
Materiale rosette	Acciaio S235	
Spessore rosette	s_r =	15 mm
Diametro rosette	$Ø_r$ =	120 mm

Lunghezza minima tirafondi: 40 diametri (640 mm)

Calcestruzzo

Resistenza cubica caratteristica a compressione	R_{ck} =	30.00 N/mm^2
Resistenza cilindrica caratteristica a compressione	f_{ck} = 0.83 • R_{ck} =	24.90 N/mm^2
Resistenza di calcolo a compressione	f_{cd} = a_{cc} • f_{ck} / g_c =	14.11 N/mm^2
Resistenza caratteristica a trazione	f_{ctk} = 0.7 • 0.30 • $f_{ck}^{2/3}$ =	1.79 N/mm^2
Resistenza tangenziale di aderenza di calcolo	f_{bd} = 2.25 • h_1 • h_2 • f_{ctk} / g_c =	2.69 N/mm^2

Compressione massima calcestruzzo (Nodo n. 6, CMB n. 167)

p_{max} = 5.68 N/mm^2 < f_{cd} Ok

Verifica ancoraggio

Si considera la massima resistenza a trazione di progetto dei tirafondi

Trazione di progetto dell'ancoraggio	$F_{t,an,Ed}$ = max [$F_{t,Rd}$] =	40111.4 N

Si considera il contributo di aderenza fornito dai tirafondi (L_a = 235 mm)

Resistenza a trazione per aderenza	$F_{t,ad,Rd}$ = L_a • p • Ø • f_{bd} =	31728.4 N
Trazione di progetto residua	$F_{t,re,Ed}$ = $F_{t,an,Ed}$ - $F_{t,ad,Rd}$ =	8383.0 N

Verifica della rosetta

Pressione uniforme agente	p_{cls} =	0.75 N/mm^2

p_{cls} < f_{cd} Ok

Momento di calcolo M_{Ed} =	111838.5 N mm	
Resistenza a flessione	$M_{c,Rd}$ =	421871.0 N mm

M_{Ed} / $M_{c,Rd}$ = 0.265101 Ok

NODO 31: collegamento trave orizzontale-pilastro ultimo ballatoio

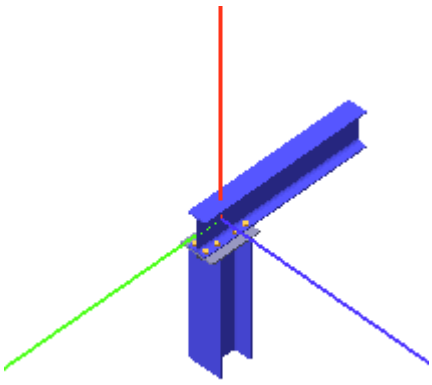

Trave 2

Tipo di profilo: IPE 220

Materiale: Acciaio S275 f_y = 275 N/mm^2 f_t = 430 N/mm^2 g_{ov} = 1.25

Classe sezione: 1

Coefficienti di sicurezza utilizzati

g_{M0} = 1.05

Viale Duca Alessandro n. 11 – 43123 Parma
Cell. 335 1403156 – E mail ing.concari@gmail.com
Sito web: studioaire.it – P.IVA 02561480340

g_{M1} = 1.10
g_{M2} = 1.25

Colonna lato inferiore
Tipo di profilo: HEA 200
Materiale: Acciaio S275 f_y = 275 N/mm^2 f_t = 430 N/mm^2 g_{ov} = 1.25
Classe sezione: 1

Flangia:
Materiale: Acciaio S275 f_y = 275 N/mm^2 f_t = 430 N/mm^2 g_{ov} = 1.25
Dimensioni (B x H x Sp): 200.0 x 300.0 x 12.0 mm
Spessore nervature verticali: 10.0 mm

Bullonature:
Viti cl. 8.8 Dadi 8 o 10 (f_{yb} = 640 N/mm^2, f_{tb} = 800 N/mm^2)
Diametro gambo Ø = 16 mm A_{res} = 156.8 mm^2 (ridotta per filettatura)
Diametro dado/testa d_m = 24 mm
Diametro foro $Ø_0$ = 17 mm

Rigidezza giunto (calcolata secondo EN 1993-1-8 : 2005 par. 6.3):
$S_{j,ini}$ = 17269190000 N mm / rad

Saldature:
Materiale: Acciaio S275 f_y = 275 N/mm^2 f_t = 430 N/mm^2 b_1 = 0.70 b_2 = 0.85
Spessore cordoni d'angolo s_c = 10 mm

Sollecitazioni nella sezione d'attacco dell'elemento:

Nodo.CMB	V2 [N]	V3 [N]	N [N]	M2 [N mm]	M3 [N mm]	T [N mm]
25.1	-19.1	28.6	-6547.0	-2184.0	-502878.0	992.0
25.2	-19.1	28.6	-6547.0	-2184.0	-502878.0	992.0
25.3	922.8	15.0	-6315.2	2775.0	-1554000.0	-828.0
25.4	922.8	15.0	-6315.2	2775.0	-1554000.0	-828.0
25.5	1423.5	96.8	-27129.5	24789.0	-3779000.0	1269.0
25.6	1423.5	96.8	-27129.5	24789.0	-3779000.0	1269.0
25.7	2365.4	83.2	-26897.7	29749.0	-4830000.0	-551.0
25.8	2365.4	83.2	-26897.7	29749.0	-4830000.0	-551.0
25.9	-123.4	23.6	-5062.9	-2252.0	-265546.0	973.0
25.10	-123.4	23.6	-5062.9	-2252.0	-265546.0	973.0
25.11	818.6	10.0	-4831.1	2707.0	-1317000.0	-847.0
25.12	818.6	10.0	-4831.1	2707.0	-1317000.0	-847.0
25.13	1319.2	91.7	-25645.4	24721.0	-3542000.0	1250.0
25.14	1319.2	91.7	-25645.4	24721.0	-3542000.0	1250.0
25.15	2261.2	78.1	-25413.6	29681.0	-4593000.0	-570.0
25.16	2261.2	78.1	-25413.6	29681.0	-4593000.0	-570.0
25.17	-333.0	33.1	-6624.3	-3837.0	-152506.0	1598.0
25.18	-333.0	33.1	-6624.3	-3837.0	-152506.0	1598.0
25.19	1236.8	10.5	-6238.0	4428.0	-1904000.0	-1435.0
25.20	1236.8	10.5	-6238.0	4428.0	-1904000.0	-1435.0
25.21	676.8	80.8	-21032.0	15044.0	-2446000.0	1792.0
25.22	676.8	80.8	-21032.0	15044.0	-2446000.0	1792.0
25.23	2246.6	58.2	-20645.7	23310.0	-4198000.0	-1241.0
25.24	2246.6	58.2	-20645.7	23310.0	-4198000.0	-1241.0
25.25	-437.3	28.1	-5140.2	-3905.0	84826.0	1579.0
25.26	-437.3	28.1	-5140.2	-3905.0	84826.0	1579.0
25.27	1132.5	5.5	-4753.9	4360.0	-1667000.0	-1454.0
25.28	1132.5	5.5	-4753.9	4360.0	-1667000.0	-1454.0
25.29	572.5	75.8	-19547.9	14976.0	-2209000.0	1773.0
25.30	572.5	75.8	-19547.9	14976.0	-2209000.0	1773.0
25.31	2142.4	53.2	-19161.6	23242.0	-3961000.0	-1260.0
25.32	2142.4	53.2	-19161.6	23242.0	-3961000.0	-1260.0
25.33	990.7	76.3	-20954.7	16697.0	-2796000.0	1185.0
25.34	990.7	76.3	-20954.7	16697.0	-2796000.0	1185.0
25.35	1932.7	62.7	-20723.0	21657.0	-3848000.0	-635.0
25.36	1932.7	62.7	-20723.0	21657.0	-3848000.0	-635.0
25.37	886.5	71.3	-19470.6	16629.0	-2559000.0	1167.0
25.38	886.5	71.3	-19470.6	16629.0	-2559000.0	1167.0
25.39	1828.4	57.7	-19238.9	21588.0	-3610000.0	-653.0
25.40	1828.4	57.7	-19238.9	21588.0	-3610000.0	-653.0
25.41	-1213.4	112.1	-4812.6	-14244.0	1467000.0	-138.0
25.42	-1213.4	112.1	-4812.6	-14244.0	1467000.0	-138.0
25.43	-271.5	98.5	-4580.8	-9285.0	416368.0	-1958.0
25.44	-271.5	98.5	-4580.8	-9285.0	416368.0	-1958.0
25.45	229.2	180.2	-25395.1	12730.0	-1809000.0	139.0
25.46	229.2	180.2	-25395.1	12730.0	-1809000.0	139.0
25.47	1171.1	166.7	-25163.3	17689.0	-2860000.0	-1681.0
25.48	1171.1	166.7	-25163.3	17689.0	-2860000.0	-1681.0
25.49	-1317.7	107.1	-3328.5	-14312.0	1705000.0	-156.0
25.50	-1317.7	107.1	-3328.5	-14312.0	1705000.0	-156.0
25.51	-375.8	93.5	-3096.7	-9353.0	653699.0	-1976.0
25.52	-375.8	93.5	-3096.7	-9353.0	653699.0	-1976.0
25.53	124.9	175.2	-23910.9	12662.0	-1572000.0	121.0
25.54	124.9	175.2	-23910.9	12662.0	-1572000.0	121.0
25.55	1066.8	161.6	-23679.2	17621.0	-2623000.0	-1699.0
25.56	1066.8	161.6	-23679.2	17621.0	-2623000.0	-1699.0
25.57	-1527.4	116.6	-4889.9	-15897.0	1818000.0	469.0
25.58	-1527.4	116.6	-4889.9	-15897.0	1818000.0	469.0
25.59	42.4	94.0	-4503.6	-7632.0	65996.0	-2564.0
25.60	42.4	94.0	-4503.6	-7632.0	65996.0	-2564.0
25.61	-517.6	164.3	-19297.6	2985.0	-475692.0	663.0
25.62	-517.6	164.3	-19297.6	2985.0	-475692.0	663.0
25.63	1052.3	141.7	-18911.3	11250.0	-2228000.0	-2370.0
25.64	1052.3	141.7	-18911.3	11250.0	-2228000.0	-2370.0

Viale Duca Alessandro n. 11 – 43123 Parma
Cell. 335 1403156 – E mail ing.concari@gmail.com
Sito web: studioaire.it – P.IVA 02561480340

25.65	-1631.7	111.6	-3405.8	-15965.0	2055000.0	450.0
25.66	-1631.7	111.6	-3405.8	-15965.0	2055000.0	450.0
25.67	-61.8	88.9	-3019.4	-7700.0	303328.0	-2583.0
25.68	-61.8	88.9	-3019.4	-7700.0	303328.0	-2583.0
25.69	-621.9	159.3	-17813.5	2916.0	-238361.0	644.0
25.70	-621.9	159.3	-17813.5	2916.0	-238361.0	644.0
25.71	948.0	136.6	-17427.2	11182.0	-1990000.0	-2389.0
25.72	948.0	136.6	-17427.2	11182.0	-1990000.0	-2389.0
25.73	-2009.7	167.7	-3656.3	-22284.0	2781000.0	-890.0
25.74	-2009.7	167.7	-3656.3	-22284.0	2781000.0	-890.0
25.75	-1067.8	154.2	-3424.5	-17325.0	1730000.0	-2710.0
25.76	-1067.8	154.2	-3424.5	-17325.0	1730000.0	-2710.0
25.77	-999.9	215.4	-18064.0	-3402.0	487510.0	-696.0
25.78	-999.9	215.4	-18064.0	-3402.0	487510.0	-696.0
25.79	-58.0	201.9	-17832.2	1557.0	-563606.0	-2516.0
25.80	-58.0	201.9	-17832.2	1557.0	-563606.0	-2516.0
25.81	-2114.0	162.7	-2172.2	-22352.0	3018000.0	-909.0
25.82	-2114.0	162.7	-2172.2	-22352.0	3018000.0	-909.0
25.83	-1172.1	149.1	-1940.4	-17393.0	1967000.0	-2729.0
25.84	-1172.1	149.1	-1940.4	-17393.0	1967000.0	-2729.0
25.85	-1104.2	210.4	-16579.9	-3470.0	724841.0	-715.0
25.86	-1104.2	210.4	-16579.9	-3470.0	724841.0	-715.0
25.87	-162.2	196.8	-16348.1	1489.0	-326274.0	-2535.0
25.88	-162.2	196.8	-16348.1	1489.0	-326274.0	-2535.0
25.89	-203.6	159.8	-19220.3	4638.0	-826063.9	56.0
25.90	-203.6	159.8	-19220.3	4638.0	-826063.9	56.0
25.91	738.3	146.2	-18988.5	9597.0	-1877000.0	-1764.0
25.92	738.3	146.2	-18988.5	9597.0	-1877000.0	-1764.0
25.93	-307.9	154.8	-17736.2	4569.0	-588733.0	37.0
25.94	-307.9	154.8	-17736.2	4569.0	-588733.0	37.0
25.95	634.0	141.2	-17504.4	9529.0	-1640000.0	-1782.0
25.96	634.0	141.2	-17504.4	9529.0	-1640000.0	-1782.0
25.97	-461.5	-12.2	-4453.1	-14362.0	466662.0	434.0
25.98	-461.5	-12.2	-4453.1	-14362.0	466662.0	434.0
25.99	480.4	-25.7	-4221.3	-9403.0	-584453.0	-1386.0
25.100	480.4	-25.7	-4221.3	-9403.0	-584453.0	-1386.0
25.101	981.1	56.0	-25035.6	12612.0	-2810000.0	711.0
25.102	981.1	56.0	-25035.6	12612.0	-2810000.0	711.0
25.103	1923.0	42.4	-24803.8	17571.0	-3861000.0	-1109.0
25.104	1923.0	42.4	-24803.8	17571.0	-3861000.0	-1109.0
25.105	-565.8	-17.2	-2969.0	-14430.0	703994.0	415.0
25.106	-565.8	-17.2	-2969.0	-14430.0	703994.0	415.0
25.107	376.1	-30.8	-2737.2	-9471.0	-347122.0	-1405.0
25.108	376.1	-30.8	-2737.2	-9471.0	-347122.0	-1405.0
25.109	876.8	51.0	-23551.5	12543.0	-2573000.0	692.0
25.110	876.8	51.0	-23551.5	12543.0	-2573000.0	692.0
25.111	1818.7	37.4	-23319.7	17503.0	-3624000.0	-1128.0
25.112	1818.7	37.4	-23319.7	17503.0	-3624000.0	-1128.0
25.113	-775.5	-7.6	-4530.4	-16015.0	817034.0	1040.0
25.114	-775.5	-7.6	-4530.4	-16015.0	817034.0	1040.0
25.115	794.4	-30.3	-4144.1	-7750.0	-934825.0	-1993.0
25.116	794.4	-30.3	-4144.1	-7750.0	-934825.0	-1993.0
25.117	234.3	40.1	-18938.1	2866.0	-1477000.0	1234.0
25.118	234.3	40.1	-18938.1	2866.0	-1477000.0	1234.0
25.119	1804.2	17.4	-18551.8	11132.0	-3228000.0	-1799.0
25.120	1804.2	17.4	-18551.8	11132.0	-3228000.0	-1799.0
25.121	-879.8	-12.7	-3046.3	-16083.0	1054000.0	1022.0
25.122	-879.8	-12.7	-3046.3	-16083.0	1054000.0	1022.0
25.123	690.1	-35.3	-2660.0	-7818.0	-697494.0	-2012.0
25.124	690.1	-35.3	-2660.0	-7818.0	-697494.0	-2012.0
25.125	130.1	35.0	-17454.0	2798.0	-1239000.0	1215.0
25.126	130.1	35.0	-17454.0	2798.0	-1239000.0	1215.0
25.127	1699.9	12.4	-17067.7	11064.0	-2991000.0	-1818.0
25.128	1699.9	12.4	-17067.7	11064.0	-2991000.0	-1818.0
25.129	548.3	35.5	-18860.8	4520.0	-1827000.0	628.0
25.130	548.3	35.5	-18860.8	4520.0	-1827000.0	628.0
25.131	1490.2	22.0	-18629.1	9479.0	-2878000.0	-1192.0
25.132	1490.2	22.0	-18629.1	9479.0	-2878000.0	-1192.0
25.133	444.0	30.5	-17376.7	4451.0	-1590000.0	609.0
25.134	444.0	30.5	-17376.7	4451.0	-1590000.0	609.0
25.135	1385.9	16.9	-17145.0	9411.0	-2641000.0	-1211.0
25.136	1385.9	16.9	-17145.0	9411.0	-2641000.0	-1211.0
25.137	-756.5	-39.3	-3057.2	-22481.0	1113000.0	62.0
25.138	-756.5	-39.3	-3057.2	-22481.0	1113000.0	62.0
25.139	185.4	-52.9	-2825.4	-17521.0	61907.0	-1758.0
25.140	185.4	-52.9	-2825.4	-17521.0	61907.0	-1758.0
25.141	253.4	8.4	-17464.9	-3599.0	-1181000.0	256.0
25.142	253.4	8.4	-17464.9	-3599.0	-1181000.0	256.0
25.143	1195.3	-5.2	-17233.1	1360.0	-2232000.0	-1564.0
25.144	1195.3	-5.2	-17233.1	1360.0	-2232000.0	-1564.0
25.145	-860.7	-44.4	-1573.1	-22549.0	1350000.0	43.0
25.146	-860.7	-44.4	-1573.1	-22549.0	1350000.0	43.0
25.147	81.2	-58.0	-1341.3	-17589.0	299238.0	-1777.0
25.148	81.2	-58.0	-1341.3	-17589.0	299238.0	-1777.0
25.149	149.1	3.3	-15980.8	-3667.0	-943195.0	237.0
25.150	149.1	3.3	-15980.8	-3667.0	-943195.0	237.0
25.151	1091.0	-10.3	-15749.0	1292.0	-1994000.0	-1583.0
25.152	1091.0	-10.3	-15749.0	1292.0	-1994000.0	-1583.0
25.153	-9867.0	1543.1	1131.5	-193096.0	13590000.0	-11866.0
25.154	-6554.6	683.3	-6178.4	-81046.0	8317000.0	-21031.0
25.155	8403.9	-595.2	-20181.7	103079.0	-12520000.0	21379.0
25.156	11716.3	-1455.1	-27491.6	215129.0	-17800000.0	12213.0

Viale Duca Alessandro n. 11 – 43123 Parma
Cell. 335 1403156 – E mail ing.concari@gmail.com
Sito web: studioaire.it – P.IVA 02561480340

25.157	-9784.8	1466.8	1571.4	-179645.0	13590000.0	-18953.0
25.158	-6636.9	759.6	-6618.2	-94497.0	8321000.0	-13944.0
25.159	8486.2	-671.5	-19741.8	116530.0	-12520000.0	14291.0
25.160	11634.0	-1378.7	-27931.4	201679.0	-17790000.0	19300.0
25.161	-9427.0	1904.5	537.6	-244596.0	13020000.0	-15940.0
25.162	-6114.6	1044.6	-6772.3	-132546.0	7748000.0	-25106.0
25.163	7963.8	-956.5	-19587.7	154580.0	-11950000.0	25453.0
25.164	11276.3	-1816.4	-26897.6	266629.0	-17230000.0	16287.0
25.165	-9344.7	1828.2	977.4	-231145.0	13020000.0	-23027.0
25.166	-6196.9	1121.0	-7212.2	-145997.0	7752000.0	-18018.0
25.167	8046.1	-1032.9	-19147.8	168030.0	-11960000.0	18365.0
25.168	11194.0	-1740.1	-27337.4	253179.0	-17220000.0	23374.0
25.169	-7336.7	1797.9	2200.1	-220159.0	10610000.0	10463.0
25.170	3704.7	-1068.3	-22166.2	153340.0	-6977000.0	-20090.0
25.171	-1855.4	1156.4	-4193.8	-131307.0	2774000.0	20437.0
25.172	9186.0	-1709.8	-28560.2	242193.0	-14810000.0	-10116.0
25.173	-7204.7	1906.3	2021.9	-235609.0	10440000.0	9241.0
25.174	3836.8	-959.9	-22344.4	137890.0	-7148000.0	-21312.0
25.175	-1987.5	1048.0	-4015.6	-115857.0	2944000.0	21659.0
25.176	9054.0	-1818.2	-28382.0	257643.0	-14640000.0	-8894.0
25.177	-7062.4	1543.5	3666.3	-175324.0	10590000.0	-13161.0
25.178	3430.4	-813.9	-23632.4	108505.0	-6964000.0	3535.0
25.179	-1581.1	902.0	-2727.7	-86472.0	2760000.0	-3188.0
25.180	8911.7	-1455.4	-30026.3	197358.0	-14800000.0	13508.0
25.181	-6930.4	1651.9	3488.1	-190774.0	10420000.0	-14384.0
25.182	3562.4	-705.5	-23810.5	93055.0	-7134000.0	2313.0
25.183	-1713.2	793.6	-2549.5	-71021.0	2931000.0	-1966.0
25.184	8779.7	-1563.8	-29848.1	212808.0	-14630000.0	14731.0
30.1	-135.0	165.1	-5617.0	-47584.0	727620.0	898.0
30.2	-135.0	165.1	-5617.0	-47584.0	727620.0	898.0
30.3	-754.2	-102.4	-5009.1	-5745.0	1309000.0	-919.0
30.4	-754.2	-102.4	-5009.1	-5745.0	1309000.0	-919.0
30.5	-1538.3	260.1	-22595.0	-106015.0	3949000.0	824.0
30.6	-1538.3	260.1	-22595.0	-106015.0	3949000.0	824.0
30.7	-2157.6	-7.4	-21987.1	-64177.0	4531000.0	-993.0
30.8	-2157.6	-7.4	-21987.1	-64177.0	4531000.0	-993.0
30.9	-32.4	157.8	-4390.9	-41431.0	492603.0	900.0
30.10	-32.4	157.8	-4390.9	-41431.0	492603.0	900.0
30.11	-651.6	-109.7	-3783.0	408.0	1074000.0	-917.0
30.12	-651.6	-109.7	-3783.0	408.0	1074000.0	-917.0
30.13	-1435.7	252.9	-21368.9	-99862.0	3714000.0	827.0
30.14	-1435.7	252.9	-21368.9	-99862.0	3714000.0	827.0
30.15	-2055.0	-14.6	-20761.0	-58023.0	4296000.0	-990.0
30.16	-2055.0	-14.6	-20761.0	-58023.0	4296000.0	-990.0
30.17	71.5	254.2	-5819.6	-61530.0	533762.0	1503.0
30.18	71.5	254.2	-5819.6	-61530.0	533762.0	1503.0
30.19	-960.7	-191.6	-4806.5	8201.0	1503000.0	-1525.0
30.20	-960.7	-191.6	-4806.5	8201.0	1503000.0	-1525.0
30.21	-910.9	320.8	-17704.2	-102432.0	2789000.0	1452.0
30.22	-910.9	320.8	-17704.2	-102432.0	2789000.0	1452.0
30.23	-1943.0	-125.1	-16691.1	-32701.0	3758000.0	-1576.0
30.24	-1943.0	-125.1	-16691.1	-32701.0	3758000.0	-1576.0
30.25	174.1	247.0	-4593.5	-55377.0	298745.0	1506.0
30.26	174.1	247.0	-4593.5	-55377.0	298745.0	1506.0
30.27	-858.1	-198.8	-3580.4	14354.0	1268000.0	-1522.0
30.28	-858.1	-198.8	-3580.4	14354.0	1268000.0	-1522.0
30.29	-808.3	313.5	-16478.1	-96279.0	2554000.0	1454.0
30.30	-808.3	313.5	-16478.1	-96279.0	2554000.0	1454.0
30.31	-1840.4	-132.3	-15465.0	-26548.0	3523000.0	-1574.0
30.32	-1840.4	-132.3	-15465.0	-26548.0	3523000.0	-1574.0
30.33	-1117.3	231.6	-17501.6	-88486.0	2983000.0	846.0
30.34	-1117.3	231.6	-17501.6	-88486.0	2983000.0	846.0
30.35	-1736.6	-35.9	-16893.7	-46647.0	3564000.0	-971.0
30.36	-1736.6	-35.9	-16893.7	-46647.0	3564000.0	-971.0
30.37	-1014.7	224.4	-16275.5	-82333.0	2748000.0	849.0
30.38	-1014.7	224.4	-16275.5	-82333.0	2748000.0	849.0
30.39	-1634.0	-43.1	-15667.6	-40494.0	3329000.0	-968.0
30.40	-1634.0	-43.1	-15667.6	-40494.0	3329000.0	-968.0
30.41	-1404.4	147.4	-7385.7	-45707.0	2870000.0	794.0
30.42	-1404.4	147.4	-7385.7	-45707.0	2870000.0	794.0
30.43	-2023.6	-120.0	-6777.8	-3869.0	3451000.0	-1023.0
30.44	-2023.6	-120.0	-6777.8	-3869.0	3451000.0	-1023.0
30.45	-2807.7	242.5	-24363.7	-104139.0	6091000.0	720.0
30.46	-2807.7	242.5	-24363.7	-104139.0	6091000.0	720.0
30.47	-3427.0	-25.0	-23755.8	-62300.0	6673000.0	-1097.0
30.48	-3427.0	-25.0	-23755.8	-62300.0	6673000.0	-1097.0
30.49	-1301.8	140.2	-6159.6	-39554.0	2635000.0	796.0
30.50	-1301.8	140.2	-6159.6	-39554.0	2635000.0	796.0
30.51	-1921.0	-127.3	-5551.7	2285.0	3216000.0	-1021.0
30.52	-1921.0	-127.3	-5551.7	2285.0	3216000.0	-1021.0
30.53	-2705.1	235.3	-23137.6	-97985.0	5856000.0	723.0
30.54	-2705.1	235.3	-23137.6	-97985.0	5856000.0	723.0
30.55	-3324.4	-32.2	-22529.7	-56147.0	6438000.0	-1094.0
30.56	-3324.4	-32.2	-22529.7	-56147.0	6438000.0	-1094.0
30.57	-1197.9	236.6	-7588.3	-59654.0	2676000.0	1399.0
30.58	-1197.9	236.6	-7588.3	-59654.0	2676000.0	1399.0
30.59	-2230.1	-209.2	-6575.2	10078.0	3645000.0	-1629.0
30.60	-2230.1	-209.2	-6575.2	10078.0	3645000.0	-1629.0
30.61	-2180.3	303.1	-19472.9	-100556.0	4931000.0	1348.0
30.62	-2180.3	303.1	-19472.9	-100556.0	4931000.0	1348.0
30.63	-3212.4	-142.7	-18459.8	-30824.0	5900000.0	-1680.0
30.64	-3212.4	-142.7	-18459.8	-30824.0	5900000.0	-1680.0

Viale Duca Alessandro n. 11 – 43123 Parma
Cell. 335 1403156 – E mail ing.concari@gmail.com
Sito web: studioaire.it – P.IVA 02561480340

30.65	-1095.3	229.4	-6362.2	-53500.0	2441000.0	1402.0
30.66	-1095.3	229.4	-6362.2	-53500.0	2441000.0	1402.0
30.67	-2127.5	-216.4	-5349.1	16231.0	3410000.0	-1626.0
30.68	-2127.5	-216.4	-5349.1	16231.0	3410000.0	-1626.0
30.69	-2077.7	295.9	-18246.8	-94402.0	4696000.0	1350.0
30.70	-2077.7	295.9	-18246.8	-94402.0	4696000.0	1350.0
30.71	-3109.8	-149.9	-17233.7	-24671.0	5665000.0	-1678.0
30.72	-3109.8	-149.9	-17233.7	-24671.0	5665000.0	-1678.0
30.73	-2250.6	135.7	-8564.8	-44456.0	4298000.0	724.0
30.74	-2250.6	135.7	-8564.8	-44456.0	4298000.0	724.0
30.75	-2869.9	-131.8	-7957.0	-2618.0	4880000.0	-1093.0
30.76	-2869.9	-131.8	-7957.0	-2618.0	4880000.0	-1093.0
30.77	-3233.0	202.2	-20449.4	-85358.0	6553000.0	673.0
30.78	-3233.0	202.2	-20449.4	-85358.0	6553000.0	673.0
30.79	-3852.3	-65.3	-19841.6	-43520.0	7134000.0	-1144.0
30.80	-3852.3	-65.3	-19841.6	-43520.0	7134000.0	-1144.0
30.81	-2148.0	128.5	-7338.8	-38303.0	4063000.0	727.0
30.82	-2148.0	128.5	-7338.8	-38303.0	4063000.0	727.0
30.83	-2767.3	-139.0	-6730.9	3536.0	4645000.0	-1090.0
30.84	-2767.3	-139.0	-6730.9	3536.0	4645000.0	-1090.0
30.85	-3130.4	195.0	-19223.4	-79205.0	6318000.0	675.0
30.86	-3130.4	195.0	-19223.4	-79205.0	6318000.0	675.0
30.87	-3749.7	-72.5	-18615.5	-37366.0	6899000.0	-1142.0
30.88	-3749.7	-72.5	-18615.5	-37366.0	6899000.0	-1142.0
30.89	-2386.7	214.0	-19270.3	-86609.0	5125000.0	742.0
30.90	-2386.7	214.0	-19270.3	-86609.0	5125000.0	742.0
30.91	-3006.0	-53.5	-18662.4	-44771.0	5706000.0	-1075.0
30.92	-3006.0	-53.5	-18662.4	-44771.0	5706000.0	-1075.0
30.93	-2284.1	206.8	-18044.2	-80456.0	4890000.0	745.0
30.94	-2284.1	206.8	-18044.2	-80456.0	4890000.0	745.0
30.95	-2903.4	-60.7	-17436.3	-38617.0	5471000.0	-1072.0
30.96	-2903.4	-60.7	-17436.3	-38617.0	5471000.0	-1072.0
30.97	212.6	109.7	-3010.6	-63355.0	-106404.0	1178.0
30.98	212.6	109.7	-3010.6	-63355.0	-106404.0	1178.0
30.99	-406.7	-157.8	-2402.7	-21516.0	475169.0	-639.0
30.100	-406.7	-157.8	-2402.7	-21516.0	475169.0	-639.0
30.101	-1190.7	204.7	-19988.6	-121786.0	3115000.0	1104.0
30.102	-1190.7	204.7	-19988.6	-121786.0	3115000.0	1104.0
30.103	-1810.0	-62.8	-19380.7	-79948.0	3697000.0	-713.0
30.104	-1810.0	-62.8	-19380.7	-79948.0	3697000.0	-713.0
30.105	315.2	102.5	-1784.5	-57202.0	-341421.0	1180.0
30.106	315.2	102.5	-1784.5	-57202.0	-341421.0	1180.0
30.107	-304.1	-165.0	-1176.6	-15363.0	240152.0	-637.0
30.108	-304.1	-165.0	-1176.6	-15363.0	240152.0	-637.0
30.109	-1088.1	197.5	-18762.5	-115633.0	2880000.0	1106.0
30.110	-1088.1	197.5	-18762.5	-115633.0	2880000.0	1106.0
30.111	-1707.4	-70.0	-18154.6	-73794.0	3462000.0	-710.0
30.112	-1707.4	-70.0	-18154.6	-73794.0	3462000.0	-710.0
30.113	419.1	198.8	-3213.2	-77301.0	-300262.0	1783.0
30.114	419.1	198.8	-3213.2	-77301.0	-300262.0	1783.0
30.115	-613.1	-247.0	-2200.1	-7570.0	669026.0	-1245.0
30.116	-613.1	-247.0	-2200.1	-7570.0	669026.0	-1245.0
30.117	-563.3	265.4	-15097.8	-118203.0	1955000.0	1732.0
30.118	-563.3	265.4	-15097.8	-118203.0	1955000.0	1732.0
30.119	-1595.4	-180.4	-14084.7	-48472.0	2924000.0	-1296.0
30.120	-1595.4	-180.4	-14084.7	-48472.0	2924000.0	-1296.0
30.121	521.6	191.6	-1987.1	-71148.0	-535279.0	1786.0
30.122	521.6	191.6	-1987.1	-71148.0	-535279.0	1786.0
30.123	-510.5	-254.2	-974.0	-1417.0	434009.0	-1243.0
30.124	-510.5	-254.2	-974.0	-1417.0	434009.0	-1243.0
30.125	-460.7	258.2	-13871.7	-112050.0	1720000.0	1734.0
30.126	-460.7	258.2	-13871.7	-112050.0	1720000.0	1734.0
30.127	-1492.8	-187.7	-12858.6	-42319.0	2689000.0	-1294.0
30.128	-1492.8	-187.7	-12858.6	-42319.0	2689000.0	-1294.0
30.129	-769.7	176.2	-14895.2	-104257.0	2149000.0	1126.0
30.130	-769.7	176.2	-14895.2	-104257.0	2149000.0	1126.0
30.131	-1389.0	-91.3	-14287.3	-62418.0	2730000.0	-691.0
30.132	-1389.0	-91.3	-14287.3	-62418.0	2730000.0	-691.0
30.133	-667.1	169.0	-13669.1	-98104.0	1914000.0	1129.0
30.134	-667.1	169.0	-13669.1	-98104.0	1914000.0	1129.0
30.135	-1286.4	-98.5	-13061.2	-56265.0	2495000.0	-688.0
30.136	-1286.4	-98.5	-13061.2	-56265.0	2495000.0	-688.0
30.137	444.3	72.8	-1273.0	-73869.0	-662420.0	1364.0
30.138	444.3	72.8	-1273.0	-73869.0	-662420.0	1364.0
30.139	-174.9	-194.7	-665.1	-32030.0	-80847.0	-453.0
30.140	-174.9	-194.7	-665.1	-32030.0	-80847.0	-453.0
30.141	-538.0	139.3	-13157.6	-114771.0	1593000.0	1313.0
30.142	-538.0	139.3	-13157.6	-114771.0	1593000.0	1313.0
30.143	-1157.3	-128.2	-12549.7	-72932.0	2174000.0	-504.0
30.144	-1157.3	-128.2	-12549.7	-72932.0	2174000.0	-504.0
30.145	546.9	65.5	-46.9	-67716.0	-897437.0	1367.0
30.146	546.9	65.5	-46.9	-67716.0	-897437.0	1367.0
30.147	-72.3	-201.9	561.0	-25877.0	-315864.0	-450.0
30.148	-72.3	-201.9	561.0	-25877.0	-315864.0	-450.0
30.149	-435.4	132.1	-11931.5	-108618.0	1358000.0	1315.0
30.150	-435.4	132.1	-11931.5	-108618.0	1358000.0	1315.0
30.151	-1054.7	-135.4	-11323.6	-66779.0	1939000.0	-502.0
30.152	-1054.7	-135.4	-11323.6	-66779.0	1939000.0	-502.0
30.153	-9061.7	-252.6	-17406.1	2402.0	14020000.0	12535.0
30.154	-12034.4	-575.1	-24010.6	38803.0	18570000.0	8501.0
30.155	10227.7	699.3	2254.3	-126571.0	-14420000.0	-8576.0
30.156	7255.0	376.8	-4350.2	-90170.0	-9873000.0	-12610.0

Viale Duca Alessandro n. 11 – 43123 Parma
Cell. 335 1403156 – E mail ing.concari@gmail.com
Sito web: studioaire.it – P.IVA 02561480340

30.157	-9232.5	-292.3	-16926.2	10273.0	14180000.0	9280.0
30.158	-11863.6	-535.4	-24490.4	30932.0	18400000.0	11756.0
30.159	10056.9	659.6	2734.1	-118700.0	-14260000.0	-11831.0
30.160	7425.8	416.5	-4830.0	-98041.0	-10040000.0	-9355.0
30.161	-8529.7	-345.3	-17783.6	12069.0	13240000.0	12235.0
30.162	-11502.4	-667.8	-24388.1	48471.0	17790000.0	8202.0
30.163	9695.8	792.0	2631.8	-136238.0	-13640000.0	-8277.0
30.164	6723.0	469.5	-3972.7	-99837.0	-9094000.0	-12310.0
30.165	-8700.6	-385.0	-17303.7	19940.0	13400000.0	8980.0
30.166	-11331.6	-628.1	-24867.9	40600.0	17620000.0	11457.0
30.167	9524.9	752.3	3111.6	-128367.0	-13480000.0	-11532.0
30.168	6893.9	509.2	-4452.5	-107708.0	-9259000.0	-9055.0
30.169	1157.8	456.9	-2819.7	-85207.0	-1242000.0	9851.0
30.170	-8751.3	-618.2	-24834.7	36131.0	13920000.0	-3593.0
30.171	6944.6	742.4	3078.4	-123899.0	-9774000.0	3518.0
30.172	-2964.5	-332.7	-18936.6	-2561.0	5386000.0	-9927.0
30.173	1317.4	429.1	-2933.0	-82307.0	-1476000.0	9761.0
30.174	-8591.7	-646.1	-24947.9	39031.0	13680000.0	-3683.0
30.175	6785.0	770.3	3191.6	-126799.0	-9540000.0	3608.0
30.176	-3124.0	-304.9	-18823.3	-5461.0	5620000.0	-9837.0
30.177	588.4	324.5	-1220.3	-58970.0	-694534.0	-999.0
30.178	-8181.9	-485.9	-26434.1	9895.0	13370000.0	7257.0
30.179	6375.2	610.1	4677.8	-97662.0	-9226000.0	-7332.0
30.180	-2395.1	-200.3	-20536.0	-28797.0	4838000.0	923.0
30.181	748.0	296.7	-1333.5	-56070.0	-928282.0	-1089.0
30.182	-8022.3	-513.7	-26547.4	12795.0	13140000.0	7167.0
30.183	6215.6	637.9	4791.1	-100562.0	-8992000.0	-7242.0
30.184	-2554.6	-172.5	-20422.8	-31698.0	5072000.0	1013.0
31.1	1547.1	240.2	-5323.1	-34318.0	-2652000.0	1204.0
31.2	1547.1	240.2	-5323.1	-34318.0	-2652000.0	1204.0
31.3	502.9	-233.5	-5474.8	-17609.0	-1954000.0	-464.0
31.4	502.9	-233.5	-5474.8	-17609.0	-1954000.0	-464.0
31.5	5020.3	248.6	-23442.0	-144413.0	-10480000.0	2501.0
31.6	5020.3	248.6	-23442.0	-144413.0	-10480000.0	2501.0
31.7	3976.0	-225.1	-23593.7	-127704.0	-9782000.0	833.0
31.8	3976.0	-225.1	-23593.7	-127704.0	-9782000.0	833.0
31.9	1310.6	239.4	-4077.2	-28326.0	-2121000.0	1118.0
31.10	1310.6	239.4	-4077.2	-28326.0	-2121000.0	1118.0
31.11	266.3	-234.3	-4228.9	-11618.0	-1423000.0	-550.0
31.12	266.3	-234.3	-4228.9	-11618.0	-1423000.0	-550.0
31.13	4783.7	247.8	-22196.1	-138421.0	-9948000.0	2415.0
31.14	4783.7	247.8	-22196.1	-138421.0	-9948000.0	2415.0
31.15	3739.5	-225.9	-22347.8	-121712.0	-9250000.0	747.0
31.16	3739.5	-225.9	-22347.8	-121712.0	-9250000.0	747.0
31.17	1895.2	398.1	-5272.5	-39888.0	-2885000.0	1760.0
31.18	1895.2	398.1	-5272.5	-39888.0	-2885000.0	1760.0
31.19	154.8	-391.4	-5525.4	-12040.0	-1722000.0	-1021.0
31.20	154.8	-391.4	-5525.4	-12040.0	-1722000.0	-1021.0
31.21	4326.4	404.0	-17955.8	-116954.0	-8364000.0	2668.0
31.22	4326.4	404.0	-17955.8	-116954.0	-8364000.0	2668.0
31.23	2586.0	-385.5	-18208.6	-89106.0	-7201000.0	-113.0
31.24	2586.0	-385.5	-18208.6	-89106.0	-7201000.0	-113.0
31.25	1658.6	397.3	-4026.6	-33896.0	-2353000.0	1674.0
31.26	1658.6	397.3	-4026.6	-33896.0	-2353000.0	1674.0
31.27	-81.8	-392.2	-4279.5	-6048.0	-1190000.0	-1106.0
31.28	-81.8	-392.2	-4279.5	-6048.0	-1190000.0	-1106.0
31.29	4089.9	403.2	-16709.8	-110962.0	-7832000.0	2582.0
31.30	4089.9	403.2	-16709.8	-110962.0	-7832000.0	2582.0
31.31	2349.5	-386.3	-16962.7	-83114.0	-6669000.0	-198.0
31.32	2349.5	-386.3	-16962.7	-83114.0	-6669000.0	-198.0
31.33	3978.3	246.1	-18006.3	-111384.0	-8131000.0	2112.0
31.34	3978.3	246.1	-18006.3	-111384.0	-8131000.0	2112.0
31.35	2934.1	-227.6	-18158.0	-94676.0	-7434000.0	444.0
31.36	2934.1	-227.6	-18158.0	-94676.0	-7434000.0	444.0
31.37	3741.8	245.3	-16760.4	-105393.0	-7600000.0	2026.0
31.38	3741.8	245.3	-16760.4	-105393.0	-7600000.0	2026.0
31.39	2697.5	-228.4	-16912.1	-88684.0	-6902000.0	358.0
31.40	2697.5	-228.4	-16912.1	-88684.0	-6902000.0	358.0
31.41	393.9	285.5	-3646.6	-43803.0	-43856.0	-364.0
31.42	393.9	285.5	-3646.6	-43803.0	-43856.0	-364.0
31.43	-650.3	-188.2	-3798.3	-27094.0	653945.0	-2032.0
31.44	-650.3	-188.2	-3798.3	-27094.0	653945.0	-2032.0
31.45	3867.1	293.9	-21765.5	-153898.0	-7871000.0	933.0
31.46	3867.1	293.9	-21765.5	-153898.0	-7871000.0	933.0
31.47	2822.9	-179.8	-21917.2	-137189.0	-7173000.0	-735.0
31.48	2822.9	-179.8	-21917.2	-137189.0	-7173000.0	-735.0
31.49	157.4	284.7	-2400.7	-37811.0	487673.0	-449.0
31.50	157.4	284.7	-2400.7	-37811.0	487673.0	-449.0
31.51	-886.8	-189.0	-2552.4	-21103.0	1185000.0	-2117.0
31.52	-886.8	-189.0	-2552.4	-21103.0	1185000.0	-2117.0
31.53	3630.6	293.1	-20519.5	-147906.0	-7340000.0	848.0
31.54	3630.6	293.1	-20519.5	-147906.0	-7340000.0	848.0
31.55	2586.3	-180.6	-20671.3	-131197.0	-6642000.0	-820.0
31.56	2586.3	-180.6	-20671.3	-131197.0	-6642000.0	-820.0
31.57	742.0	443.4	-3596.0	-49373.0	-276457.0	192.0
31.58	742.0	443.4	-3596.0	-49373.0	-276457.0	192.0
31.59	-998.4	-346.1	-3848.9	-21525.0	886545.0	-2588.0
31.60	-998.4	-346.1	-3848.9	-21525.0	886545.0	-2588.0
31.61	3173.2	449.3	-16279.2	-126439.0	-5756000.0	1100.0
31.62	3173.2	449.3	-16279.2	-126439.0	-5756000.0	1100.0
31.63	1432.8	-340.2	-16532.1	-98591.0	-4593000.0	-1680.0
31.64	1432.8	-340.2	-16532.1	-98591.0	-4593000.0	-1680.0

Viale Duca Alessandro n. 11 – 43123 Parma
Cell. 335 1403156 – E mail ing.concari@gmail.com
Sito web: studioaire.it – P.IVA 02561480340

31.65	505.5	442.6	-2350.1	-43381.0	255072.0	107.0
31.66	505.5	442.6	-2350.1	-43381.0	255072.0	107.0
31.67	-1234.9	-346.8	-2603.0	-15533.0	1418000.0	-2673.0
31.68	-1234.9	-346.8	-2603.0	-15533.0	1418000.0	-2673.0
31.69	2936.7	448.5	-15033.3	-120447.0	-5224000.0	1015.0
31.70	2936.7	448.5	-15033.3	-120447.0	-5224000.0	1015.0
31.71	1196.3	-341.0	-15286.2	-92599.0	-4061000.0	-1765.0
31.72	1196.3	-341.0	-15286.2	-92599.0	-4061000.0	-1765.0
31.73	-374.8	315.7	-2528.9	-50126.0	1695000.0	-1408.0
31.74	-374.8	315.7	-2528.9	-50126.0	1695000.0	-1408.0
31.75	-1419.1	-158.0	-2680.6	-33418.0	2393000.0	-3077.0
31.76	-1419.1	-158.0	-2680.6	-33418.0	2393000.0	-3077.0
31.77	2056.4	321.6	-15212.1	-127193.0	-3784000.0	-500.0
31.78	2056.4	321.6	-15212.1	-127193.0	-3784000.0	-500.0
31.79	1012.2	-152.1	-15363.8	-110484.0	-3086000.0	-2169.0
31.80	1012.2	-152.1	-15363.8	-110484.0	-3086000.0	-2169.0
31.81	-611.4	314.9	-1283.0	-44135.0	2227000.0	-1494.0
31.82	-611.4	314.9	-1283.0	-44135.0	2227000.0	-1494.0
31.83	-1655.6	-158.8	-1434.7	-27426.0	2924000.0	-3162.0
31.84	-1655.6	-158.8	-1434.7	-27426.0	2924000.0	-3162.0
31.85	1819.9	320.8	-13966.2	-121201.0	-3253000.0	-586.0
31.86	1819.9	320.8	-13966.2	-121201.0	-3253000.0	-586.0
31.87	775.6	-152.9	-14117.9	-104492.0	-2555000.0	-2254.0
31.88	775.6	-152.9	-14117.9	-104492.0	-2555000.0	-2254.0
31.89	2825.2	291.4	-16329.8	-120869.0	-5523000.0	544.0
31.90	2825.2	291.4	-16329.8	-120869.0	-5523000.0	544.0
31.91	1780.9	-182.3	-16481.5	-104161.0	-4825000.0	-1124.0
31.92	1780.9	-182.3	-16481.5	-104161.0	-4825000.0	-1124.0
31.93	2588.6	290.6	-15083.9	-114878.0	-4991000.0	459.0
31.94	2588.6	290.6	-15083.9	-114878.0	-4991000.0	459.0
31.95	1544.4	-183.1	-15235.6	-98169.0	-4294000.0	-1209.0
31.96	1544.4	-183.1	-15235.6	-98169.0	-4294000.0	-1209.0
31.97	1907.5	103.1	-6106.9	-52557.0	-3187000.0	667.0
31.98	1907.5	103.1	-6106.9	-52557.0	-3187000.0	667.0
31.99	863.2	-370.6	-6258.6	-35848.0	-2490000.0	-1001.0
31.100	863.2	-370.6	-6258.6	-35848.0	-2490000.0	-1001.0
31.101	5380.6	111.5	-24225.8	-162651.0	-11010000.0	1964.0
31.102	5380.6	111.5	-24225.8	-162651.0	-11010000.0	1964.0
31.103	4336.4	-362.2	-24377.5	-145943.0	-10320000.0	296.0
31.104	4336.4	-362.2	-24377.5	-145943.0	-10320000.0	296.0
31.105	1671.0	102.3	-4861.0	-46565.0	-2656000.0	581.0
31.106	1671.0	102.3	-4861.0	-46565.0	-2656000.0	581.0
31.107	626.7	-371.4	-5012.7	-29856.0	-1958000.0	-1087.0
31.108	626.7	-371.4	-5012.7	-29856.0	-1958000.0	-1087.0
31.109	5144.1	110.7	-22979.9	-156660.0	-10480000.0	1879.0
31.110	5144.1	110.7	-22979.9	-156660.0	-10480000.0	1879.0
31.111	4099.9	-363.0	-23131.6	-139951.0	-9785000.0	210.0
31.112	4099.9	-363.0	-23131.6	-139951.0	-9785000.0	210.0
31.113	2255.6	261.0	-6056.4	-58126.0	-3420000.0	1223.0
31.114	2255.6	261.0	-6056.4	-58126.0	-3420000.0	1223.0
31.115	515.2	-528.5	-6309.2	-30278.0	-2257000.0	-1557.0
31.116	515.2	-528.5	-6309.2	-30278.0	-2257000.0	-1557.0
31.117	4686.8	266.9	-18739.6	-135192.0	-8899000.0	2131.0
31.118	4686.8	266.9	-18739.6	-135192.0	-8899000.0	2131.0
31.119	2946.4	-522.6	-18992.4	-107344.0	-7736000.0	-649.0
31.120	2946.4	-522.6	-18992.4	-107344.0	-7736000.0	-649.0
31.121	2019.0	260.2	-4810.4	-52135.0	-2889000.0	1137.0
31.122	2019.0	260.2	-4810.4	-52135.0	-2889000.0	1137.0
31.123	278.6	-529.3	-5063.3	-24286.0	-1726000.0	-1643.0
31.124	278.6	-529.3	-5063.3	-24286.0	-1726000.0	-1643.0
31.125	4450.2	266.1	-17493.7	-129201.0	-8368000.0	2045.0
31.126	4450.2	266.1	-17493.7	-129201.0	-8368000.0	2045.0
31.127	2709.8	-523.4	-17746.5	-101353.0	-7205000.0	-735.0
31.128	2709.8	-523.4	-17746.5	-101353.0	-7205000.0	-735.0
31.129	4338.7	109.0	-18790.1	-129623.0	-8667000.0	1575.0
31.130	4338.7	109.0	-18790.1	-129623.0	-8667000.0	1575.0
31.131	3294.5	-364.7	-18941.9	-112914.0	-7969000.0	-93.0
31.132	3294.5	-364.7	-18941.9	-112914.0	-7969000.0	-93.0
31.133	4102.2	108.2	-17544.2	-123631.0	-8135000.0	1489.0
31.134	4102.2	108.2	-17544.2	-123631.0	-8135000.0	1489.0
31.135	3057.9	-365.5	-17695.9	-106922.0	-7437000.0	-179.0
31.136	3057.9	-365.5	-17695.9	-106922.0	-7437000.0	-179.0
31.137	2147.7	11.7	-6629.5	-64716.0	-3544000.0	309.0
31.138	2147.7	11.7	-6629.5	-64716.0	-3544000.0	309.0
31.139	1103.5	-462.0	-6781.2	-48007.0	-2847000.0	-1359.0
31.140	1103.5	-462.0	-6781.2	-48007.0	-2847000.0	-1359.0
31.141	4579.0	17.6	-19312.7	-141782.0	-9023000.0	1217.0
31.142	4579.0	17.6	-19312.7	-141782.0	-9023000.0	1217.0
31.143	3534.7	-456.1	-19464.4	-125073.0	-8326000.0	-451.0
31.144	3534.7	-456.1	-19464.4	-125073.0	-8326000.0	-451.0
31.145	1911.2	10.9	-5383.6	-58724.0	-3013000.0	223.0
31.146	1911.2	10.9	-5383.6	-58724.0	-3013000.0	223.0
31.147	867.0	-462.8	-5535.3	-42015.0	-2315000.0	-1445.0
31.148	867.0	-462.8	-5535.3	-42015.0	-2315000.0	-1445.0
31.149	4342.4	16.8	-18066.8	-135790.0	-8492000.0	1131.0
31.150	4342.4	16.8	-18066.8	-135790.0	-8492000.0	1131.0
31.151	3298.2	-456.9	-18218.5	-119082.0	-7794000.0	-537.0
31.152	3298.2	-456.9	-18218.5	-119082.0	-7794000.0	-537.0
31.153	-5380.3	884.6	-2181.3	-236566.0	8801000.0	-7767.0
31.154	-7699.4	328.3	1926.1	-134811.0	12950000.0	-18136.0
31.155	12054.8	-316.4	-24727.3	6791.0	-22750000.0	19742.0
31.156	9735.8	-872.7	-20619.9	108546.0	-18610000.0	9374.0

Viale Duca Alessandro n. 11 – 43123 Parma
Cell. 335 1403156 – E mail ing.concari@gmail.com
Sito web: studioaire.it – P.IVA 02561480340

31.157	-5945.2	837.8	-1836.0	-227200.0	9897000.0	-15442.0
31.158	-7134.6	375.1	1580.9	-144177.0	11850000.0	-10461.0
31.159	11490.0	-363.2	-24382.1	16157.0	-21660000.0	12067.0
31.160	10300.6	-826.0	-20965.2	99180.0	-19700000.0	17048.0
31.161	-4800.0	1102.6	-3518.2	-278662.0	7909000.0	-14289.0
31.162	-7119.1	546.3	589.2	-176907.0	12050000.0	-24657.0
31.163	11474.5	-534.4	-23390.4	48887.0	-21860000.0	26263.0
31.164	9155.4	-1090.7	-19283.0	150643.0	-17710000.0	15895.0
31.165	-5364.8	1055.8	-3173.0	-269296.0	9004000.0	-21963.0
31.166	-6554.3	593.0	243.9	-186273.0	10960000.0	-16982.0
31.167	10909.7	-581.2	-23045.1	58253.0	-20760000.0	18589.0
31.168	9720.2	-1043.9	-19628.2	141277.0	-18810000.0	23569.0
31.169	3427.5	1113.3	-14864.4	-270106.0	-7078000.0	13957.0
31.170	-4302.7	-741.1	-1173.0	69079.0	6739000.0	-20604.0
31.171	8658.1	753.0	-21628.2	-197099.0	-16540000.0	22210.0
31.172	927.9	-1101.4	-7936.8	142086.0	-2727000.0	-12351.0
31.173	3601.6	1178.7	-15265.4	-282735.0	-7346000.0	12001.0
31.174	-4128.6	-675.7	-1574.1	56450.0	6471000.0	-22560.0
31.175	8484.0	687.6	-21227.1	-184470.0	-16280000.0	24166.0
31.176	753.8	-1166.8	-7535.8	154715.0	-2459000.0	-10395.0
31.177	1544.8	957.4	-13713.5	-238885.0	-3427000.0	-11624.0
31.178	-2420.0	-585.2	-2323.9	37859.0	3087000.0	4978.0
31.179	6775.4	597.1	-20477.3	-165878.0	-12890000.0	-3372.0
31.180	2810.6	-945.5	-9087.7	110866.0	-6379000.0	13231.0
31.181	1718.9	1022.8	-14114.6	-251514.0	-3694000.0	-13581.0
31.182	-2245.9	-519.8	-2725.0	25230.0	2819000.0	3022.0
31.183	6601.3	531.7	-20076.2	-153250.0	-12620000.0	-1415.0
31.184	2636.5	-1010.9	-8686.7	123495.0	-6111000.0	15187.0
31.1	1547.1	240.2	-5323.1	-34318.0	-2652000.0	1204.0
31.2	1547.1	240.2	-5323.1	-34318.0	-2652000.0	1204.0
31.3	502.9	-233.5	-5474.8	-17609.0	-1954000.0	-464.0
31.4	502.9	-233.5	-5474.8	-17609.0	-1954000.0	-464.0
31.5	5020.3	248.6	-23442.0	-144413.0	-10480000.0	2501.0
31.6	5020.3	248.6	-23442.0	-144413.0	-10480000.0	2501.0
31.7	3976.0	-225.1	-23593.7	-127704.0	-9782000.0	833.0
31.8	3976.0	-225.1	-23593.7	-127704.0	-9782000.0	833.0
31.9	1310.6	239.4	-4077.2	-28326.0	-2121000.0	1118.0
31.10	1310.6	239.4	-4077.2	-28326.0	-2121000.0	1118.0
31.11	266.3	-234.3	-4228.9	-11618.0	-1423000.0	-550.0
31.12	266.3	-234.3	-4228.9	-11618.0	-1423000.0	-550.0
31.13	4783.7	247.8	-22196.1	-138421.0	-9948000.0	2415.0
31.14	4783.7	247.8	-22196.1	-138421.0	-9948000.0	2415.0
31.15	3739.5	-225.9	-22347.8	-121712.0	-9250000.0	747.0
31.16	3739.5	-225.9	-22347.8	-121712.0	-9250000.0	747.0
31.17	1895.2	398.1	-5272.5	-39888.0	-2885000.0	1760.0
31.18	1895.2	398.1	-5272.5	-39888.0	-2885000.0	1760.0
31.19	154.8	-391.4	-5525.4	-12040.0	-1722000.0	-1021.0
31.20	154.8	-391.4	-5525.4	-12040.0	-1722000.0	-1021.0
31.21	4326.4	404.0	-17955.8	-116954.0	-8364000.0	2668.0
31.22	4326.4	404.0	-17955.8	-116954.0	-8364000.0	2668.0
31.23	2586.0	-385.5	-18208.6	-89106.0	-7201000.0	-113.0
31.24	2586.0	-385.5	-18208.6	-89106.0	-7201000.0	-113.0
31.25	1658.6	397.3	-4026.6	-33896.0	-2353000.0	1674.0
31.26	1658.6	397.3	-4026.6	-33896.0	-2353000.0	1674.0
31.27	-81.8	-392.2	-4279.5	-6048.0	-1190000.0	-1106.0
31.28	-81.8	-392.2	-4279.5	-6048.0	-1190000.0	-1106.0
31.29	4089.9	403.2	-16709.8	-110962.0	-7832000.0	2582.0
31.30	4089.9	403.2	-16709.8	-110962.0	-7832000.0	2582.0
31.31	2349.5	-386.3	-16962.7	-83114.0	-6669000.0	-198.0
31.32	2349.5	-386.3	-16962.7	-83114.0	-6669000.0	-198.0
31.33	3978.3	246.1	-18006.3	-111384.0	-8131000.0	2112.0
31.34	3978.3	246.1	-18006.3	-111384.0	-8131000.0	2112.0
31.35	2934.1	-227.6	-18158.0	-94676.0	-7434000.0	444.0
31.36	2934.1	-227.6	-18158.0	-94676.0	-7434000.0	444.0
31.37	3741.8	245.3	-16760.4	-105393.0	-7600000.0	2026.0
31.38	3741.8	245.3	-16760.4	-105393.0	-7600000.0	2026.0
31.39	2697.5	-228.4	-16912.1	-88684.0	-6902000.0	358.0
31.40	2697.5	-228.4	-16912.1	-88684.0	-6902000.0	358.0
31.41	393.9	285.5	-3646.6	-43803.0	-43856.0	-364.0
31.42	393.9	285.5	-3646.6	-43803.0	-43856.0	-364.0
31.43	-650.3	-188.2	-3798.3	-27094.0	653945.0	-2032.0
31.44	-650.3	-188.2	-3798.3	-27094.0	653945.0	-2032.0
31.45	3867.1	293.9	-21765.5	-153898.0	-7871000.0	933.0
31.46	3867.1	293.9	-21765.5	-153898.0	-7871000.0	933.0
31.47	2822.9	-179.8	-21917.2	-137189.0	-7173000.0	-735.0
31.48	2822.9	-179.8	-21917.2	-137189.0	-7173000.0	-735.0
31.49	157.4	284.7	-2400.7	-37811.0	487673.0	-449.0
31.50	157.4	284.7	-2400.7	-37811.0	487673.0	-449.0
31.51	-886.8	-189.0	-2552.4	-21103.0	1185000.0	-2117.0
31.52	-886.8	-189.0	-2552.4	-21103.0	1185000.0	-2117.0
31.53	3630.6	293.1	-20519.5	-147906.0	-7340000.0	848.0
31.54	3630.6	293.1	-20519.5	-147906.0	-7340000.0	848.0
31.55	2586.3	-180.6	-20671.3	-131197.0	-6642000.0	-820.0
31.56	2586.3	-180.6	-20671.3	-131197.0	-6642000.0	-820.0
31.57	742.0	443.4	-3596.0	-49373.0	-276457.0	192.0
31.58	742.0	443.4	-3596.0	-49373.0	-276457.0	192.0
31.59	-998.4	-346.1	-3848.9	-21525.0	886545.0	-2588.0
31.60	-998.4	-346.1	-3848.9	-21525.0	886545.0	-2588.0
31.61	3173.2	449.3	-16279.2	-126439.0	-5756000.0	1100.0
31.62	3173.2	449.3	-16279.2	-126439.0	-5756000.0	1100.0
31.63	1432.8	-340.2	-16532.1	-98591.0	-4593000.0	-1680.0
31.64	1432.8	-340.2	-16532.1	-98591.0	-4593000.0	-1680.0

Viale Duca Alessandro n. 11 – 43123 Parma
Cell. 335 1403156 – E mail ing.concari@gmail.com
Sito web: studioaire.it – P.IVA 02561480340

31.65	505.5	442.6	-2350.1	-43381.0	255072.0	107.0
31.66	505.5	442.6	-2350.1	-43381.0	255072.0	107.0
31.67	-1234.9	-346.8	-2603.0	-15533.0	1418000.0	-2673.0
31.68	-1234.9	-346.8	-2603.0	-15533.0	1418000.0	-2673.0
31.69	2936.7	448.5	-15033.3	-120447.0	-5224000.0	1015.0
31.70	2936.7	448.5	-15033.3	-120447.0	-5224000.0	1015.0
31.71	1196.3	-341.0	-15286.2	-92599.0	-4061000.0	-1765.0
31.72	1196.3	-341.0	-15286.2	-92599.0	-4061000.0	-1765.0
31.73	-374.8	315.7	-2528.9	-50126.0	1695000.0	-1408.0
31.74	-374.8	315.7	-2528.9	-50126.0	1695000.0	-1408.0
31.75	-1419.1	-158.0	-2680.6	-33418.0	2393000.0	-3077.0
31.76	-1419.1	-158.0	-2680.6	-33418.0	2393000.0	-3077.0
31.77	2056.4	321.6	-15212.1	-127193.0	-3784000.0	-500.0
31.78	2056.4	321.6	-15212.1	-127193.0	-3784000.0	-500.0
31.79	1012.2	-152.1	-15363.8	-110484.0	-3086000.0	-2169.0
31.80	1012.2	-152.1	-15363.8	-110484.0	-3086000.0	-2169.0
31.81	-611.4	314.9	-1283.0	-44135.0	2227000.0	-1494.0
31.82	-611.4	314.9	-1283.0	-44135.0	2227000.0	-1494.0
31.83	-1655.6	-158.8	-1434.7	-27426.0	2924000.0	-3162.0
31.84	-1655.6	-158.8	-1434.7	-27426.0	2924000.0	-3162.0
31.85	1819.9	320.8	-13966.2	-121201.0	-3253000.0	-586.0
31.86	1819.9	320.8	-13966.2	-121201.0	-3253000.0	-586.0
31.87	775.6	-152.9	-14117.9	-104492.0	-2555000.0	-2254.0
31.88	775.6	-152.9	-14117.9	-104492.0	-2555000.0	-2254.0
31.89	2825.2	291.4	-16329.8	-120869.0	-5523000.0	544.0
31.90	2825.2	291.4	-16329.8	-120869.0	-5523000.0	544.0
31.91	1780.9	-182.3	-16481.5	-104161.0	-4825000.0	-1124.0
31.92	1780.9	-182.3	-16481.5	-104161.0	-4825000.0	-1124.0
31.93	2588.6	290.6	-15083.9	-114878.0	-4991000.0	459.0
31.94	2588.6	290.6	-15083.9	-114878.0	-4991000.0	459.0
31.95	1544.4	-183.1	-15235.6	-98169.0	-4294000.0	-1209.0
31.96	1544.4	-183.1	-15235.6	-98169.0	-4294000.0	-1209.0
31.97	1907.5	103.1	-6106.9	-52557.0	-3187000.0	667.0
31.98	1907.5	103.1	-6106.9	-52557.0	-3187000.0	667.0
31.99	863.2	-370.6	-6258.6	-35848.0	-2490000.0	-1001.0
31.100	863.2	-370.6	-6258.6	-35848.0	-2490000.0	-1001.0
31.101	5380.6	111.5	-24225.8	-162651.0	-11010000.0	1964.0
31.102	5380.6	111.5	-24225.8	-162651.0	-11010000.0	1964.0
31.103	4336.4	-362.2	-24377.5	-145943.0	-10320000.0	296.0
31.104	4336.4	-362.2	-24377.5	-145943.0	-10320000.0	296.0
31.105	1671.0	102.3	-4861.0	-46565.0	-2656000.0	581.0
31.106	1671.0	102.3	-4861.0	-46565.0	-2656000.0	581.0
31.107	626.7	-371.4	-5012.7	-29856.0	-1958000.0	-1087.0
31.108	626.7	-371.4	-5012.7	-29856.0	-1958000.0	-1087.0
31.109	5144.1	110.7	-22979.9	-156660.0	-10480000.0	1879.0
31.110	5144.1	110.7	-22979.9	-156660.0	-10480000.0	1879.0
31.111	4099.9	-363.0	-23131.6	-139951.0	-9785000.0	210.0
31.112	4099.9	-363.0	-23131.6	-139951.0	-9785000.0	210.0
31.113	2255.6	261.0	-6056.4	-58126.0	-3420000.0	1223.0
31.114	2255.6	261.0	-6056.4	-58126.0	-3420000.0	1223.0
31.115	515.2	-528.5	-6309.2	-30278.0	-2257000.0	-1557.0
31.116	515.2	-528.5	-6309.2	-30278.0	-2257000.0	-1557.0
31.117	4686.8	266.9	-18739.6	-135192.0	-8899000.0	2131.0
31.118	4686.8	266.9	-18739.6	-135192.0	-8899000.0	2131.0
31.119	2946.4	-522.6	-18992.4	-107344.0	-7736000.0	-649.0
31.120	2946.4	-522.6	-18992.4	-107344.0	-7736000.0	-649.0
31.121	2019.0	260.2	-4810.4	-52135.0	-2889000.0	1137.0
31.122	2019.0	260.2	-4810.4	-52135.0	-2889000.0	1137.0
31.123	278.6	-529.3	-5063.3	-24286.0	-1726000.0	-1643.0
31.124	278.6	-529.3	-5063.3	-24286.0	-1726000.0	-1643.0
31.125	4450.2	266.1	-17493.7	-129201.0	-8368000.0	2045.0
31.126	4450.2	266.1	-17493.7	-129201.0	-8368000.0	2045.0
31.127	2709.8	-523.4	-17746.5	-101353.0	-7205000.0	-735.0
31.128	2709.8	-523.4	-17746.5	-101353.0	-7205000.0	-735.0
31.129	4338.7	109.0	-18790.1	-129623.0	-8667000.0	1575.0
31.130	4338.7	109.0	-18790.1	-129623.0	-8667000.0	1575.0
31.131	3294.5	-364.7	-18941.9	-112914.0	-7969000.0	-93.0
31.132	3294.5	-364.7	-18941.9	-112914.0	-7969000.0	-93.0
31.133	4102.2	108.2	-17544.2	-123631.0	-8135000.0	1489.0
31.134	4102.2	108.2	-17544.2	-123631.0	-8135000.0	1489.0
31.135	3057.9	-365.5	-17695.9	-106922.0	-7437000.0	-179.0
31.136	3057.9	-365.5	-17695.9	-106922.0	-7437000.0	-179.0
31.137	2147.7	11.7	-6629.5	-64716.0	-3544000.0	309.0
31.138	2147.7	11.7	-6629.5	-64716.0	-3544000.0	309.0
31.139	1103.5	-462.0	-6781.2	-48007.0	-2847000.0	-1359.0
31.140	1103.5	-462.0	-6781.2	-48007.0	-2847000.0	-1359.0
31.141	4579.0	17.6	-19312.7	-141782.0	-9023000.0	1217.0
31.142	4579.0	17.6	-19312.7	-141782.0	-9023000.0	1217.0
31.143	3534.7	-456.1	-19464.4	-125073.0	-8326000.0	-451.0
31.144	3534.7	-456.1	-19464.4	-125073.0	-8326000.0	-451.0
31.145	1911.2	10.9	-5383.6	-58724.0	-3013000.0	223.0
31.146	1911.2	10.9	-5383.6	-58724.0	-3013000.0	223.0
31.147	867.0	-462.8	-5535.3	-42015.0	-2315000.0	-1445.0
31.148	867.0	-462.8	-5535.3	-42015.0	-2315000.0	-1445.0
31.149	4342.4	16.8	-18066.8	-135790.0	-8492000.0	1131.0
31.150	4342.4	16.8	-18066.8	-135790.0	-8492000.0	1131.0
31.151	3298.2	-456.9	-18218.5	-119082.0	-7794000.0	-537.0
31.152	3298.2	-456.9	-18218.5	-119082.0	-7794000.0	-537.0
31.153	-5380.3	884.6	-2181.3	-236566.0	8801000.0	-7767.0
31.154	-7699.4	328.3	1926.1	-134811.0	12950000.0	-18136.0
31.155	12054.8	-316.4	-24727.3	6791.0	-22750000.0	19742.0
31.156	9735.8	-872.7	-20619.9	108546.0	-18610000.0	9374.0

Viale Duca Alessandro n. 11 – 43123 Parma
Cell. 335 1403156 – E mail ing.concari@gmail.com
Sito web: studioaire.it – P.IVA 02561480340

31.157	-5945.2	837.8	-1836.0	-227200.0	9897000.0	-15442.0
31.158	-7134.6	375.1	1580.9	-144177.0	11850000.0	-10461.0
31.159	11490.0	-363.2	-24382.1	16157.0	-21660000.0	12067.0
31.160	10300.6	-826.0	-20965.2	99180.0	-19700000.0	17048.0
31.161	-4800.0	1102.6	-3518.2	-278662.0	7909000.0	-14289.0
31.162	-7119.1	546.3	589.2	-176907.0	12050000.0	-24657.0
31.163	11474.5	-534.4	-23390.4	48887.0	-21860000.0	26263.0
31.164	9155.4	-1090.7	-19283.0	150643.0	-17710000.0	15895.0
31.165	-5364.8	1055.8	-3173.0	-269296.0	9004000.0	-21963.0
31.166	-6554.3	593.0	243.9	-186273.0	10960000.0	-16982.0
31.167	10909.7	-581.2	-23045.1	58253.0	-20760000.0	18589.0
31.168	9720.2	-1043.9	-19628.2	141277.0	-18810000.0	23569.0
31.169	3427.5	1113.3	-14864.4	-270106.0	-7078000.0	13957.0
31.170	-4302.7	-741.1	-1173.0	69079.0	6739000.0	-20604.0
31.171	8658.1	753.0	-21628.2	-197099.0	-16540000.0	22210.0
31.172	927.9	-1101.4	-7936.8	142086.0	-2727000.0	-12351.0
31.173	3601.6	1178.7	-15265.4	-282735.0	-7346000.0	12001.0
31.174	-4128.6	-675.7	-1574.1	56450.0	6471000.0	-22560.0
31.175	8484.0	687.6	-21227.1	-184470.0	-16280000.0	24166.0
31.176	753.8	-1166.8	-7535.8	154715.0	-2459000.0	-10395.0
31.177	1544.8	957.4	-13713.5	-238885.0	-3427000.0	-11624.0
31.178	-2420.0	-585.2	-2323.9	37859.0	3087000.0	4978.0
31.179	6775.4	597.1	-20477.3	-165878.0	-12890000.0	-3372.0
31.180	2810.6	-945.5	-9087.7	110866.0	-6379000.0	13231.0
31.181	1718.9	1022.8	-14114.6	-251514.0	-3694000.0	-13581.0
31.182	-2245.9	-519.8	-2725.0	25230.0	2819000.0	3022.0
31.183	6601.3	531.7	-20076.2	-153250.0	-12620000.0	-1415.0
31.184	2636.5	-1010.9	-8686.7	123495.0	-6111000.0	15187.0

Calcolo resistenze

Resistenza a trazione dei bulloni $F_{tb,Rd} = 0.9 \bullet f_{tb} \bullet A_{res} / g_{M2} =$ 90333.1 N
Resistenza a punzonamento flangia $B_{pf,Rd} = 0.6 \bullet p \bullet d_m \bullet t_f \bullet f_{tk} / g_{M2} =$ 186746.3 N
Resistenza a punzonamento ala passante $B_{pa,Rd} = 0.6 \bullet p \bullet d_m \bullet t_a \bullet f_{tk} / g_{M2} =$ 143172.2 N

Bull.	$F_{f,Rd}$ [N]	$F_{t,Rd}$ [N]
1	37558.5	37558.5
2	38503.3	38503.3
3	38503.3	38503.3
4	37558.5	37558.5
5	37558.5	37558.5
6	38503.3	38503.3
7	38503.3	38503.3
8	37558.5	37558.5

Legenda
$F_{f,Rd} = M_{res,m} / (B_m \bullet R_m)$ resistenza a flessione flangia
$F_{t,Rd} = \min [F_{tb,Rd} , B_{pf,Rd} , B_{pa,Rd} , F_{f,Rd}]$ resistenza a trazione di progetto

Resistenza a taglio dei bulloni $F_{vb,Rd} = 0.6 \bullet f_{tb} \bullet A_{res} / g_{M2} =$ 60222.1 N

Bull.	$F_{bf,x,Rd}$ [N]	$F_{ba,x,Rd}$ [N]	$F_{v,x,Rd}$ [N]	$F_{bf,y,Rd}$ [N]	$F_{ba,y,Rd}$ [N]	$F_{v,y,Rd}$ [N]
1	159680.8	52126.1	52126.1	80941.2	89061.2	60222.1
2	165120.0	52126.1	52126.1	165120.0	89061.2	60222.1
3	165120.0	52126.1	52126.1	165120.0	89061.2	60222.1
4	159680.8	50409.0	50409.0	80941.2	43657.5	43657.5
5	159680.8	52126.1	52126.1	80941.2	89061.2	60222.1
6	165120.0	52126.1	52126.1	165120.0	89061.2	60222.1
7	165120.0	52126.1	52126.1	165120.0	89061.2	60222.1
8	159680.8	50409.0	50409.0	80941.2	43657.5	43657.5

Legenda
$F_{bf,x,Rd} = k \bullet a \bullet f_{tk} \bullet Ø \bullet t_f / g_{M2}$ resistenza a rifollamento flangia in direzione x
$F_{ba,x,Rd} = k \bullet a \bullet f_{tk} \bullet Ø \bullet t_a / g_{M2}$ resistenza a rifollamento ala passante in direzione x
$F_{v,x,Rd} = \min [F_{vb,Rd} , F_{bf,x,Rd} , F_{ba,x,Rd}]$ resistenza a taglio di progetto in direzione x
$F_{bf,y,Rd} = k \bullet a \bullet f_{tk} \bullet Ø \bullet t_f / g_{M2}$ resistenza a rifollamento flangia in direzione y
$F_{ba,y,Rd} = k \bullet a \bullet f_{tk} \bullet Ø \bullet t_a / g_{M2}$ resistenza a rifollamento ala passante in direzione y
$F_{v,y,Rd} = \min [F_{vb,Rd} , F_{bf,y,Rd} , F_{ba,y,Rd}]$ resistenza a taglio di progetto in direzione y

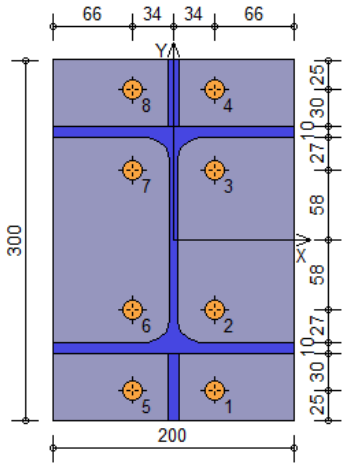

Verifiche sui bulloni

1-Taglio e trazione (Nodo n. 31, CMB n. 155)

Bull.	X [mm]	Y [mm]	$F_{v,Ed}$ [N]	$F_{v,Rd}$ [N]	$F_{t,Ed}$ [N]	$F_{t,Rd}$ [N]	FV_1	VER

Viale Duca Alessandro n. 11 – 43123 Parma
Cell. 335 1403156 – E mail ing.concari@gmail.com
Sito web: studioaire.it – P.IVA 02561480340

1	34.00	-125.00	1499.0	60222.1	0.0	37558.5	0.024891	Ok
2	34.00	-58.00	1499.2	60222.1	4007.9	38503.3	0.099246	Ok
3	34.00	58.00	1499.9	60222.1	16895.2	38503.3	0.338335	Ok
4	34.00	125.00	1500.5	43657.5	24338.8	37558.5	0.497244	Ok
5	-34.00	-125.00	1514.8	60222.1	0.0	37558.5	0.025153	Ok
6	-34.00	-58.00	1515.0	60222.1	3997.5	38503.3	0.099314	Ok
7	-34.00	58.00	1515.7	60222.1	16884.8	38503.3	0.338402	Ok
8	-34.00	125.00	1516.3	43657.5	24328.3	37558.5	0.497406	Ok

2-Trazione (Nodo n. 31, CMB n. 155)

Bull.	X [mm]	Y [mm]	$F_{t,Ed}$ [N]	$F_{t,Rd}$ [N]	FV_2	VER
1	34.00	-125.00	0.0	37558.5	0.000000	Ok
2	34.00	-58.00	4007.9	38503.3	0.104092	Ok
3	34.00	58.00	16895.2	38503.3	0.438800	Ok
4	34.00	125.00	24338.8	37558.5	0.648023	Ok
5	-34.00	-125.00	0.0	37558.5	0.000000	Ok
6	-34.00	-58.00	3997.5	38503.3	0.103821	Ok
7	-34.00	58.00	16884.8	38503.3	0.438528	Ok
8	-34.00	125.00	24328.3	37558.5	0.647745	Ok

Legenda

$F_{v,Ed}$ forza di taglio agente sul bullone
$F_{v,Rd}$ resistenza a taglio di progetto del bullone
$F_{t,Ed}$ forza di trazione agente sul bullone
$F_{t,Rd}$ resistenza a trazione di progetto del bullone
$FV_1 = F_{v,Ed} / F_{v,Rd} + F_{t,Ed} / (1.4 \bullet F_{t,Rd})$
$FV_2 = F_{t,Ed} / F_{t,Rd}$
VER ® $FV_i \leq 1$

Verifiche sulle saldature profilo-flangia (versione beta)

Si considera la sezione di gola (avente altezza $a = s_c / 2^{0.5} = 7.071$) in posizione ribaltata: vengono considerate positive le tensioni normali di trazione e le tensioni tangenziali agenti verso destra e verso il basso. Tutte le tensioni sono espresse in N/mm^2.

Verifica formula (4.2.84) (Nodo n. 31, CMB n. 155)

Cordoni	Lung.[mm]	$n_\wedge$	$t_\wedge$	$t_{\|\|}$	FV_1	VER_1
Nervatura inferiore lato destro	45.0	-54.71	0.00	3.81	54.84	Ok
Nervatura inferiore lato sinistro	45.0	-54.71	0.00	3.81	54.84	Ok
Ala inferiore esterno	200.0	-37.00	0.00	-0.06	37.00	Ok
Ala inferiore interno lato destro	78.8	-31.08	0.00	-0.06	31.08	Ok
Ala inferiore interno lato sinistro	78.8	-31.12	0.00	-0.06	31.12	Ok
Anima lato destro	134.0	-26.10	0.00	3.81	26.38	Ok
Anima lato sinistro	134.0	-26.10	0.00	3.81	26.38	Ok
Ala superiore interno lato destro	78.8	25.11	0.00	-0.06	25.11	Ok
Ala superiore interno lato sinistro	78.8	25.06	0.00	-0.06	25.06	Ok
Ala superiore esterno	200.0	30.95	0.00	-0.06	30.95	Ok
Nervatura superiore lato destro	45.0	48.69	0.00	3.81	48.84	Ok
Nervatura superiore lato sinistro	45.0	48.69	0.00	3.81	48.84	Ok

Verifica formula (4.2.85) (Nodo n. 31, CMB n. 155)

Cordoni	Lung.[mm]	$n_\wedge$	$t_\wedge$	$t_{\|\|}$	FV_2	VER_2
Nervatura inferiore lato destro	45.0	-54.71	0.00	3.81	54.71	Ok
Nervatura inferiore lato sinistro	45.0	-54.71	0.00	3.81	54.71	Ok
Ala inferiore esterno	200.0	-37.00	0.00	-0.06	37.00	Ok
Ala inferiore interno lato destro	78.8	-31.08	0.00	-0.06	31.08	Ok
Ala inferiore interno lato sinistro	78.8	-31.12	0.00	-0.06	31.12	Ok
Anima lato destro	134.0	-26.10	0.00	3.81	26.10	Ok
Anima lato sinistro	134.0	-26.10	0.00	3.81	26.10	Ok
Ala superiore interno lato destro	78.8	25.11	0.00	-0.06	25.11	Ok
Ala superiore interno lato sinistro	78.8	25.06	0.00	-0.06	25.06	Ok
Ala superiore esterno	200.0	30.95	0.00	-0.06	30.95	Ok
Nervatura superiore lato destro	45.0	48.69	0.00	3.81	48.69	Ok
Nervatura superiore lato sinistro	45.0	48.69	0.00	3.81	48.69	Ok

Legenda

$n_\wedge$ tensione normale perpendicolare all'asse del cordone
$t_\wedge$ tensione tangenziale perpendicolare all'asse del cordone
$t_{||}$ tensione tangenziale parallela all'asse del cordone
$FV_1 = (n_\wedge^2 + t_\wedge^2 + t_{||}^2)^{0.5}$
$FV_2 = \bar{n}_\wedge \bar{i} + \bar{t}_\wedge \bar{i}$
VER_i ® $FV_i \leq b_i \bullet f_{yk}$ ($b_1 \bullet f_{yk} = 192.50\ N/mm^2$ $b_2 \bullet f_{yk} = 233.75\ N/mm^2$)

Verifica del momento di progetto del giunto (Nodo n. 31, CMB n. 155)

Momento resistente del giunto $M_{j,Rd}$ = 39484220.0 N mm
Momento di progetto $M_{j,Ed}$ = 19502250.0 N mm
$M_{j,Ed} / M_{j,Rd}$ = 0.493925 Ok

NODO 34: collegamento trave orizzontale sbalzo-pilastro ultimo ballatoio

Viale Duca Alessandro n. 11 – 43123 Parma
Cell. 335 1403156 – E mail ing.concari@gmail.com
Sito web: studioaire.it – P.IVA 02561480340

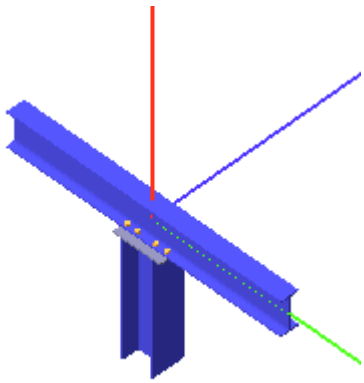

Trave 2
Tipo di profilo: IPE 220
Materiale: Acciaio S275 f_y = 275 N/mm^2 f_t = 430 N/mm^2 g_{ov} = 1.25
Classe sezione: 1

Coefficienti di sicurezza utilizzati
g_{M0} = 1.05
g_{M1} = 1.10
g_{M2} = 1.25

Colonna lato inferiore
Tipo di profilo: HEA 200
Materiale: Acciaio S275 f_y = 275 N/mm^2 f_t = 430 N/mm^2 g_{ov} = 1.25
Classe sezione: 1

Flangia:
Materiale: Acciaio S275 f_y = 275 N/mm^2 f_t = 430 N/mm^2 g_{ov} = 1.25
Dimensioni (B x H x Sp): 200.0 x 300.0 x 12.0 mm
Spessore nervature verticali: 10.0 mm

Bullonature:
Viti cl. 8.8 Dadi 8 o 10 (f_{yb} = 640 N/mm^2, f_{tb} = 800 N/mm^2)
Diametro gambo Ø = 16 mm A_{res} = 156.8 mm^2 (ridotta per filettatura)
Diametro dado/testa d_m = 24 mm
Diametro foro $Ø_0$ = 17 mm

Rigidezza giunto (calcolata secondo EN 1993-1-8 : 2005 par. 6.3):
$S_{j,ini}$ = 17269190000 N mm / rad

Saldature:
Materiale: Acciaio S275 f_y = 275 N/mm^2 f_t = 430 N/mm^2 b_1 = 0.70 b_2 = 0.85
Spessore cordoni d'angolo s_c = 10 mm

Sollecitazioni nella sezione d'attacco dell'elemento:

Nodo.CMB	V2 [N]	V3 [N]	N [N]	M2 [N mm]	M3 [N mm]	T [N mm]
34.1	-1454.1	43.1	-6807.2	63395.0	2434000.0	162.0
34.2	-1454.1	43.1	-6807.2	63395.0	2434000.0	162.0
34.3	-572.3	-88.6	-6913.6	69051.0	2014000.0	1008.0
34.4	-572.3	-88.6	-6913.6	69051.0	2014000.0	1008.0
34.5	-4900.2	-27.5	-29727.4	273926.0	10070000.0	2212.0
34.6	-4900.2	-27.5	-29727.4	273926.0	10070000.0	2212.0
34.7	-4018.4	-159.2	-29833.8	279582.0	9647000.0	3058.0
34.8	-4018.4	-159.2	-29833.8	279582.0	9647000.0	3058.0
34.9	-1220.3	48.3	-5224.0	48113.0	1921000.0	27.0
34.10	-1220.3	48.3	-5224.0	48113.0	1921000.0	27.0
34.11	-338.5	-83.4	-5330.4	53769.0	1501000.0	873.0
34.12	-338.5	-83.4	-5330.4	53769.0	1501000.0	873.0
34.13	-4666.4	-22.2	-28144.2	258643.0	9553000.0	2077.0
34.14	-4666.4	-22.2	-28144.2	258643.0	9553000.0	2077.0
34.15	-3784.6	-153.9	-28250.6	264300.0	9133000.0	2923.0
34.16	-3784.6	-153.9	-28250.6	264300.0	9133000.0	2923.0
34.17	-1748.0	87.0	-6771.8	61509.0	2574000.0	-120.0
34.18	-1748.0	87.0	-6771.8	61509.0	2574000.0	-120.0
34.19	-278.4	-132.5	-6949.0	70937.0	1874000.0	1290.0
34.20	-278.4	-132.5	-6949.0	70937.0	1874000.0	1290.0
34.21	-4160.3	37.6	-22815.9	208881.0	7917000.0	1315.0
34.22	-4160.3	37.6	-22815.9	208881.0	7917000.0	1315.0
34.23	-2690.6	-181.9	-22993.2	218308.0	7217000.0	2725.0
34.24	-2690.6	-181.9	-22993.2	218308.0	7217000.0	2725.0
34.25	-1514.2	92.2	-5188.6	46227.0	2061000.0	-255.0
34.26	-1514.2	92.2	-5188.6	46227.0	2061000.0	-255.0
34.27	-44.6	-127.3	-5365.9	55655.0	1361000.0	1155.0
34.28	-44.6	-127.3	-5365.9	55655.0	1361000.0	1155.0
34.29	-3926.5	42.8	-21232.7	193599.0	7403000.0	1180.0
34.30	-3926.5	42.8	-21232.7	193599.0	7403000.0	1180.0
34.31	-2456.8	-176.7	-21410.0	203026.0	6704000.0	2590.0
34.32	-2456.8	-176.7	-21410.0	203026.0	6704000.0	2590.0
34.33	-3866.4	-6.3	-22851.4	210766.0	7777000.0	1597.0
34.34	-3866.4	-6.3	-22851.4	210766.0	7777000.0	1597.0
34.35	-2984.6	-138.0	-22957.7	216423.0	7357000.0	2443.0

Viale Duca Alessandro n. 11 – 43123 Parma
Cell. 335 1403156 – E mail ing.concari@gmail.com
Sito web: studioaire.it – P.IVA 02561480340

34.36	-2984.6	-138.0	-22957.7	216423.0	7357000.0	2443.0
34.37	-3632.5	-1.1	-21268.2	195484.0	7264000.0	1462.0
34.38	-3632.5	-1.1	-21268.2	195484.0	7264000.0	1462.0
34.39	-2750.8	-132.8	-21374.6	201141.0	6844000.0	2308.0
34.40	-2750.8	-132.8	-21374.6	201141.0	6844000.0	2308.0
34.41	-2518.9	10.9	-8483.9	63811.0	4860000.0	-1482.0
34.42	-2518.9	10.9	-8483.9	63811.0	4860000.0	-1482.0
34.43	-1637.1	-120.8	-8590.2	69468.0	4440000.0	-636.0
34.44	-1637.1	-120.8	-8590.2	69468.0	4440000.0	-636.0
34.45	-5965.0	-59.7	-31404.1	274342.0	12490000.0	568.0
34.46	-5965.0	-59.7	-31404.1	274342.0	12490000.0	568.0
34.47	-5083.2	-191.4	-31510.4	279998.0	12070000.0	1414.0
34.48	-5083.2	-191.4	-31510.4	279998.0	12070000.0	1414.0
34.49	-2285.1	16.2	-6900.7	48529.0	4347000.0	-1617.0
34.50	-2285.1	16.2	-6900.7	48529.0	4347000.0	-1617.0
34.51	-1403.3	-115.5	-7007.1	54185.0	3927000.0	-771.0
34.52	-1403.3	-115.5	-7007.1	54185.0	3927000.0	-771.0
34.53	-5731.2	-54.4	-29820.9	259059.0	11980000.0	433.0
34.54	-5731.2	-54.4	-29820.9	259059.0	11980000.0	433.0
34.55	-4849.4	-186.1	-29927.3	264716.0	11560000.0	1279.0
34.56	-4849.4	-186.1	-29927.3	264716.0	11560000.0	1279.0
34.57	-2812.8	54.8	-8448.4	61926.0	5000000.0	-1764.0
34.58	-2812.8	54.8	-8448.4	61926.0	5000000.0	-1764.0
34.59	-1343.2	-164.7	-8625.7	71353.0	4300000.0	-354.0
34.60	-1343.2	-164.7	-8625.7	71353.0	4300000.0	-354.0
34.61	-5225.1	5.4	-24492.5	209297.0	10340000.0	-329.0
34.62	-5225.1	5.4	-24492.5	209297.0	10340000.0	-329.0
34.63	-3755.5	-214.1	-24669.8	218724.0	9643000.0	1081.0
34.64	-3755.5	-214.1	-24669.8	218724.0	9643000.0	1081.0
34.65	-2579.0	60.1	-6865.2	46643.0	4487000.0	-1899.0
34.66	-2579.0	60.1	-6865.2	46643.0	4487000.0	-1899.0
34.67	-1109.4	-159.4	-7042.5	56071.0	3787000.0	-489.0
34.68	-1109.4	-159.4	-7042.5	56071.0	3787000.0	-489.0
34.69	-4991.3	10.7	-22909.4	194015.0	9830000.0	-464.0
34.70	-4991.3	10.7	-22909.4	194015.0	9830000.0	-464.0
34.71	-3521.6	-208.8	-23086.7	203442.0	9130000.0	946.0
34.72	-3521.6	-208.8	-23086.7	203442.0	9130000.0	946.0
34.73	-3228.8	-10.5	-9601.6	64088.0	6478000.0	-2578.0
34.74	-3228.8	-10.5	-9601.6	64088.0	6478000.0	-2578.0
34.75	-2347.0	-142.2	-9708.0	69745.0	6058000.0	-1732.0
34.76	-2347.0	-142.2	-9708.0	69745.0	6058000.0	-1732.0
34.77	-5641.1	-59.9	-25645.8	211460.0	11820000.0	-1143.0
34.78	-5641.1	-59.9	-25645.8	211460.0	11820000.0	-1143.0
34.79	-4759.3	-191.6	-25752.1	217116.0	11400000.0	-297.0
34.80	-4759.3	-191.6	-25752.1	217116.0	11400000.0	-297.0
34.81	-2995.0	-5.3	-8018.4	48806.0	5965000.0	-2713.0
34.82	-2995.0	-5.3	-8018.4	48806.0	5965000.0	-2713.0
34.83	-2113.2	-137.0	-8124.8	54463.0	5545000.0	-1867.0
34.84	-2113.2	-137.0	-8124.8	54463.0	5545000.0	-1867.0
34.85	-5407.2	-54.7	-24062.6	196178.0	11310000.0	-1278.0
34.86	-5407.2	-54.7	-24062.6	196178.0	11310000.0	-1278.0
34.87	-4525.5	-186.4	-24169.0	201834.0	10890000.0	-432.0
34.88	-4525.5	-186.4	-24169.0	201834.0	10890000.0	-432.0
34.89	-4931.2	-38.5	-24528.0	211182.0	10200000.0	-47.0
34.90	-4931.2	-38.5	-24528.0	211182.0	10200000.0	-47.0
34.91	-4049.4	-170.2	-24634.4	216839.0	9783000.0	799.0
34.92	-4049.4	-170.2	-24634.4	216839.0	9783000.0	799.0
34.93	-4697.4	-33.2	-22944.8	195900.0	9690000.0	-182.0
34.94	-4697.4	-33.2	-22944.8	195900.0	9690000.0	-182.0
34.95	-3815.6	-164.9	-23051.2	201557.0	9270000.0	664.0
34.96	-3815.6	-164.9	-23051.2	201557.0	9270000.0	664.0
34.97	-1801.0	-330.2	-7717.0	65196.0	2945000.0	3083.0
34.98	-1801.0	-330.2	-7717.0	65196.0	2945000.0	3083.0
34.99	-919.2	-461.9	-7823.3	70853.0	2525000.0	3929.0
34.100	-919.2	-461.9	-7823.3	70853.0	2525000.0	3929.0
34.101	-5247.1	-400.7	-30637.2	275727.0	10580000.0	5134.0
34.102	-5247.1	-400.7	-30637.2	275727.0	10580000.0	5134.0
34.103	-4365.3	-532.4	-30743.5	281383.0	10160000.0	5980.0
34.104	-4365.3	-532.4	-30743.5	281383.0	10160000.0	5980.0
34.105	-1567.2	-324.9	-6133.8	49914.0	2432000.0	2948.0
34.106	-1567.2	-324.9	-6133.8	49914.0	2432000.0	2948.0
34.107	-685.4	-456.6	-6240.2	55571.0	2012000.0	3794.0
34.108	-685.4	-456.6	-6240.2	55571.0	2012000.0	3794.0
34.109	-5013.2	-395.5	-29054.0	260445.0	10060000.0	4999.0
34.110	-5013.2	-395.5	-29054.0	260445.0	10060000.0	4999.0
34.111	-4131.5	-527.2	-29160.4	266101.0	9644000.0	5845.0
34.112	-4131.5	-527.2	-29160.4	266101.0	9644000.0	5845.0
34.113	-2094.9	-286.3	-7681.5	63311.0	3085000.0	2801.0
34.114	-2094.9	-286.3	-7681.5	63311.0	3085000.0	2801.0
34.115	-625.3	-505.8	-7858.8	72738.0	2385000.0	4211.0
34.116	-625.3	-505.8	-7858.8	72738.0	2385000.0	4211.0
34.117	-4507.2	-335.7	-23725.7	210682.0	8428000.0	4237.0
34.118	-4507.2	-335.7	-23725.7	210682.0	8428000.0	4237.0
34.119	-3037.5	-555.2	-23902.9	220110.0	7728000.0	5647.0
34.120	-3037.5	-555.2	-23902.9	220110.0	7728000.0	5647.0
34.121	-1861.1	-281.0	-6098.3	48029.0	2572000.0	2666.0
34.122	-1861.1	-281.0	-6098.3	48029.0	2572000.0	2666.0
34.123	-391.4	-500.5	-6275.6	57456.0	1872000.0	4076.0
34.124	-391.4	-500.5	-6275.6	57456.0	1872000.0	4076.0
34.125	-4273.3	-330.4	-22142.5	195400.0	7914000.0	4102.0
34.126	-4273.3	-330.4	-22142.5	195400.0	7914000.0	4102.0
34.127	-2803.7	-549.9	-22319.8	204827.0	7214000.0	5512.0

Viale Duca Alessandro n. 11 – 43123 Parma
Cell. 335 1403156 – E mail ing.concari@gmail.com
Sito web: studioaire.it – P.IVA 02561480340

34.128	-2803.7	-549.9	-22319.8	204827.0	7214000.0	5512.0
34.129	-4213.2	-379.6	-23761.1	212568.0	8288000.0	4519.0
34.130	-4213.2	-379.6	-23761.1	212568.0	8288000.0	4519.0
34.131	-3331.4	-511.3	-23867.5	218224.0	7868000.0	5365.0
34.132	-3331.4	-511.3	-23867.5	218224.0	7868000.0	5365.0
34.133	-3979.4	-374.3	-22177.9	197286.0	7774000.0	4384.0
34.134	-3979.4	-374.3	-22177.9	197286.0	7774000.0	4384.0
34.135	-3097.6	-506.0	-22284.3	202942.0	7354000.0	5230.0
34.136	-3097.6	-506.0	-22284.3	202942.0	7354000.0	5230.0
34.137	-2032.2	-579.0	-8323.5	66397.0	3285000.0	5031.0
34.138	-2032.2	-579.0	-8323.5	66397.0	3285000.0	5031.0
34.139	-1150.4	-710.7	-8429.8	72054.0	2865000.0	5877.0
34.140	-1150.4	-710.7	-8429.8	72054.0	2865000.0	5877.0
34.141	-4444.5	-628.4	-24367.6	213769.0	8628000.0	6467.0
34.142	-4444.5	-628.4	-24367.6	213769.0	8628000.0	6467.0
34.143	-3562.7	-760.1	-24474.0	219425.0	8208000.0	7313.0
34.144	-3562.7	-760.1	-24474.0	219425.0	8208000.0	7313.0
34.145	-1798.4	-573.7	-6740.3	51115.0	2772000.0	4896.0
34.146	-1798.4	-573.7	-6740.3	51115.0	2772000.0	4896.0
34.147	-916.6	-705.4	-6846.7	56771.0	2352000.0	5742.0
34.148	-916.6	-705.4	-6846.7	56771.0	2352000.0	5742.0
34.149	-4210.7	-623.1	-22784.5	198486.0	8115000.0	6332.0
34.150	-4210.7	-623.1	-22784.5	198486.0	8115000.0	6332.0
34.151	-3328.9	-754.8	-22890.8	204143.0	7695000.0	7178.0
34.152	-3328.9	-754.8	-22890.8	204143.0	7695000.0	7178.0
34.153	-11952.6	-965.8	-28240.6	196741.0	22440000.0	-17579.0
34.154	-9706.8	-333.4	-24479.2	161419.0	18410000.0	-34853.0
34.155	5391.1	241.9	-4411.4	108887.0	-8878000.0	37392.0
34.156	7637.0	874.3	-650.1	73565.0	-12910000.0	20118.0
34.157	-11536.4	-829.7	-27844.6	201360.0	21610000.0	-20752.0
34.158	-10123.0	-469.4	-24875.2	156800.0	19230000.0	-31679.0
34.159	5807.3	377.9	-4015.4	113506.0	-9706000.0	34219.0
34.160	7220.8	738.2	-1046.0	68946.0	-12090000.0	23292.0
34.161	-11291.8	-1076.1	-27093.3	216355.0	21130000.0	-28662.0
34.162	-9046.0	-443.7	-23331.9	181032.0	17090000.0	-45936.0
34.163	4730.4	352.2	-5558.7	89274.0	-7566000.0	48475.0
34.164	6976.2	984.6	-1797.3	53952.0	-11600000.0	31201.0
34.165	-10875.6	-940.0	-26697.3	220974.0	20300000.0	-31835.0
34.166	-9462.2	-579.7	-23727.9	176413.0	17920000.0	-42762.0
34.167	5146.6	488.2	-5162.7	93893.0	-8394000.0	45302.0
34.168	6560.0	848.5	-2193.3	49333.0	-10770000.0	34375.0
34.169	-8502.4	-1280.8	-24288.6	207202.0	16190000.0	21814.0
34.170	-1016.3	827.0	-11750.8	89461.0	2734000.0	-35766.0
34.171	-3299.3	-918.5	-17139.9	180845.0	6793000.0	38306.0
34.172	4186.8	1189.3	-4602.0	63105.0	-6662000.0	-19275.0
34.173	-8304.2	-1313.9	-23944.4	213086.0	15800000.0	18489.0
34.174	-818.1	793.9	-11406.6	95345.0	2340000.0	-39091.0
34.175	-3497.5	-885.4	-17484.0	174961.0	7187000.0	41631.0
34.176	3988.6	1222.4	-4946.2	57221.0	-6268000.0	-15950.0
34.177	-7115.1	-827.4	-22968.7	222599.0	13430000.0	11235.0
34.178	-2403.7	373.6	-13070.7	74064.0	5495000.0	-25186.0
34.179	-1912.0	-465.1	-15819.9	196242.0	4033000.0	27726.0
34.180	2799.4	735.9	-5921.9	47708.0	-3902000.0	-8695.0
34.181	-6916.8	-860.5	-22624.5	228483.0	13040000.0	7910.0
34.182	-2205.5	340.5	-12726.5	79948.0	5101000.0	-28511.0
34.183	-2110.2	-432.0	-16164.1	190358.0	4427000.0	31051.0
34.184	2601.2	769.0	-6266.1	41824.0	-3508000.0	-5370.0

Calcolo resistenze

Resistenza a trazione dei bulloni $F_{tb,Rd} = 0.9 \bullet f_{tb} \bullet A_{res} / g_{M2} =$ 90333.1 N

Resistenza a punzonamento flangia $B_{pf,Rd} = 0.6 \bullet p \bullet d_m \bullet t_f \bullet f_{tk} / g_{M2} =$ 186746.3 N

Resistenza a punzonamento ala passante $B_{pa,Rd} = 0.6 \bullet p \bullet d_m \bullet t_a \bullet f_{tk} / g_{M2} =$ 143172.2 N

Bull.	$F_{f,Rd}$ [N]	$F_{t,Rd}$ [N]
1	37558.5	37558.5
2	38503.3	38503.3
3	38503.3	38503.3
4	37558.5	37558.5
5	37558.5	37558.5
6	38503.3	38503.3
7	38503.3	38503.3
8	37558.5	37558.5

Legenda

$F_{f,Rd} = M_{res,m} / (B_m \bullet R_m)$ resistenza a flessione flangia

$F_{t,Rd} = \min [F_{tb,Rd} , B_{pf,Rd} , B_{pa,Rd} , F_{f,Rd}]$ resistenza a trazione di progetto

Resistenza a taglio dei bulloni $F_{vb,Rd} = 0.6 \bullet f_{tb} \bullet A_{res} / g_{M2} =$ 60222.1 N

Bull.	$F_{bf,x,Rd}$ [N]	$F_{ba,x,Rd}$ [N]	$F_{v,x,Rd}$ [N]	$F_{bf,y,Rd}$ [N]	$F_{ba,y,Rd}$ [N]	$F_{v,y,Rd}$ [N]
1	159680.8	52126.1	52126.1	80941.2	89061.2	60222.1
2	165120.0	52126.1	52126.1	165120.0	89061.2	60222.1
3	165120.0	52126.1	52126.1	165120.0	89061.2	60222.1
4	159680.8	52126.1	52126.1	80941.2	89061.2	60222.1
5	159680.8	52126.1	52126.1	80941.2	89061.2	60222.1
6	165120.0	52126.1	52126.1	165120.0	89061.2	60222.1
7	165120.0	52126.1	52126.1	165120.0	89061.2	60222.1
8	159680.8	52126.1	52126.1	80941.2	89061.2	60222.1

Legenda

$F_{bf,x,Rd} = k \bullet a \bullet f_{tk} \bullet \varnothing \bullet t_f / g_{M2}$ resistenza a rifollamento flangia in direzione x

$F_{ba,x,Rd} = k \bullet a \bullet f_{tk} \bullet \varnothing \bullet t_a / g_{M2}$ resistenza a rifollamento ala passante in direzione x

$F_{v,x,Rd} = \min [F_{vb,Rd} , F_{bf,x,Rd} , F_{ba,x,Rd}]$ resistenza a taglio di progetto in direzione x

$F_{bf,y,Rd} = k \bullet a \bullet f_{tk} \bullet \varnothing \bullet t_f / g_{M2}$ resistenza a rifollamento flangia in direzione y

$F_{ba,y,Rd} = k \bullet a \bullet f_{tk} \bullet \varnothing \bullet t_a / g_{M2}$ resistenza a rifollamento ala passante in direzione y

$F_{v,y,Rd} = \min [F_{vb,Rd} , F_{bf,y,Rd} , F_{ba,y,Rd}]$ resistenza a taglio di progetto in direzione y

Viale Duca Alessandro n. 11 – 43123 Parma
Cell. 335 1403156 – E mail ing.concari@gmail.com
Sito web: studioaire.it – P.IVA 02561480340

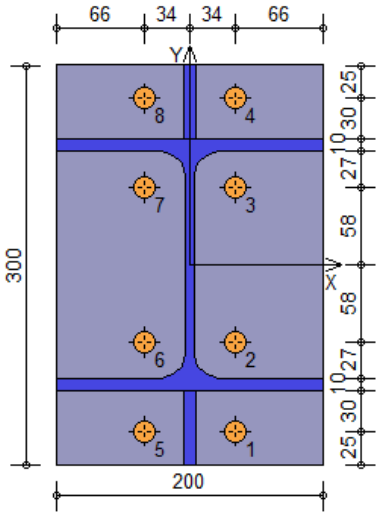

Verifiche sui bulloni

1-Taglio e trazione (Nodo n. 34, CMB n. 153)

Bull.	X [mm]	Y [mm]	$F_{v,Ed}$ [N]	$F_{v,Rd}$ [N]	$F_{t,Ed}$ [N]	$F_{t,Rd}$ [N]	FV_1	VER
1	34.00	-125.00	1494.3	60222.1	23596.5	37558.5	0.473569	Ok
2	34.00	-58.00	1493.0	60222.1	16394.2	38503.3	0.328924	Ok
3	34.00	58.00	1491.0	60222.1	3924.5	38503.3	0.097564	Ok
4	34.00	125.00	1490.1	60222.1	0.0	37558.5	0.024743	Ok
5	-34.00	-125.00	1508.2	60222.1	23298.2	37558.5	0.468128	Ok
6	-34.00	-58.00	1506.9	60222.1	16095.9	38503.3	0.323622	Ok
7	-34.00	58.00	1505.0	60222.1	3626.2	38503.3	0.092263	Ok
8	-34.00	125.00	1504.1	60222.1	0.0	37558.5	0.024976	Ok

2-Trazione (Nodo n. 34, CMB n. 153)

Bull.	X [mm]	Y [mm]	$F_{t,Ed}$ [N]	$F_{t,Rd}$ [N]	FV_2	VER
1	34.00	-125.00	23596.5	37558.5	0.628259	Ok
2	34.00	-58.00	16394.2	38503.3	0.425786	Ok
3	34.00	58.00	3924.5	38503.3	0.101927	Ok
4	34.00	125.00	0.0	37558.5	0.000000	Ok
5	-34.00	-125.00	23298.2	37558.5	0.620317	Ok
6	-34.00	-58.00	16095.9	38503.3	0.418039	Ok
7	-34.00	58.00	3626.2	38503.3	0.094180	Ok
8	-34.00	125.00	0.0	37558.5	0.000000	Ok

Legenda

$F_{v,Ed}$ forza di taglio agente sul bullone
$F_{v,Rd}$ resistenza a taglio di progetto del bullone
$F_{t,Ed}$ forza di trazione agente sul bullone
$F_{t,Rd}$ resistenza a trazione di progetto del bullone
$FV_1 = F_{v,Ed} / F_{v,Rd} + F_{t,Ed} / (1.4 \bullet F_{t,Rd})$
$FV_2 = F_{t,Ed} / F_{t,Rd}$
VER ® $FV_i \leq 1$

Verifiche sulle saldature profilo-flangia (versione beta)

Si considera la sezione di gola (avente altezza $a = s_c / 2^{0.5} = 7.071$) in posizione ribaltata: vengono considerate positive le tensioni normali di trazione e le tensioni tangenziali agenti verso destra e verso il basso. Tutte le tensioni sono espresse in N/mm^2.

Verifica formula (4.2.84) (Nodo n. 34, CMB n. 153)

Cordoni	Lung.[mm]	$n_\wedge$	$t_\wedge$	$t_{\|\|}$	FV_1	VER_1
Nervatura inferiore lato destro	45.0	47.56	0.00	-3.77	47.71	Ok
Nervatura inferiore lato sinistro	45.0	47.56	0.00	-3.77	47.71	Ok
Ala inferiore esterno	200.0	30.06	0.00	-0.19	30.07	Ok
Ala inferiore interno lato destro	78.8	25.31	0.00	-0.19	25.31	Ok
Ala inferiore interno lato sinistro	78.8	24.04	0.00	-0.19	24.04	Ok
Anima lato destro	134.0	-26.21	0.00	-3.77	26.48	Ok
Anima lato sinistro	134.0	-26.21	0.00	-3.77	26.48	Ok
Ala superiore interno lato destro	78.8	-30.91	0.00	-0.19	30.91	Ok
Ala superiore interno lato sinistro	78.8	-32.18	0.00	-0.19	32.18	Ok
Ala superiore esterno	200.0	-37.98	0.00	-0.19	37.98	Ok
Nervatura superiore lato destro	45.0	-54.43	0.00	-3.77	54.56	Ok
Nervatura superiore lato sinistro	45.0	-54.43	0.00	-3.77	54.56	Ok

Verifica formula (4.2.85) (Nodo n. 34, CMB n. 153)

Cordoni	Lung.[mm]	$n_\wedge$	$t_\wedge$	$t_{\|\|}$	FV_2	VER_2
Nervatura inferiore lato destro	45.0	47.56	0.00	-3.77	47.56	Ok
Nervatura inferiore lato sinistro	45.0	47.56	0.00	-3.77	47.56	Ok
Ala inferiore esterno	200.0	30.06	0.00	-0.19	30.06	Ok
Ala inferiore interno lato destro	78.8	25.31	0.00	-0.19	25.31	Ok
Ala inferiore interno lato sinistro	78.8	24.04	0.00	-0.19	24.04	Ok
Anima lato destro	134.0	-26.21	0.00	-3.77	26.21	Ok
Anima lato sinistro	134.0	-26.21	0.00	-3.77	26.21	Ok
Ala superiore interno lato destro	78.8	-30.91	0.00	-0.19	30.91	Ok
Ala superiore interno lato sinistro	78.8	-32.18	0.00	-0.19	32.18	Ok
Ala superiore esterno	200.0	-37.98	0.00	-0.19	37.98	Ok
Nervatura superiore lato destro	45.0	-54.43	0.00	-3.77	54.43	Ok
Nervatura superiore lato sinistro	45.0	-54.43	0.00	-3.77	54.43	Ok

Legenda

$n_\wedge$ tensione normale perpendicolare all'asse del cordone
$t_\wedge$ tensione tangenziale perpendicolare all'asse del cordone

Viale Duca Alessandro n. 11 – 43123 Parma
Cell. 335 1403156 – E mail ing.concari@gmail.com
Sito web: studioaire.it – P.IVA 02561480340

$t_{||}$ tensione tangenziale parallela all'asse del cordone
$FV_1 = (n_\wedge^2 + t_\wedge^2 + t_{||}^2)^{0.5}$
$FV_2 = ïn_\wedge ï + ït_\wedge ï$
VER_i ® $FV_i \le b_i \bullet f_{yk}$ ($b_1 \bullet f_{yk}$ = 192.50 N/mm^2 $b_2 \bullet f_{yk}$ = 233.75 N/mm^2)

Verifica del momento di progetto del giunto (Nodo n. 34, CMB n. 153)

Momento resistente del giunto	$M_{j,Rd}$ =	39410400.0 N mm
Momento di progetto	$M_{j,Ed}$ =	18739900.0 N mm

$M_{j,Ed} / M_{j,Rd}$ = 0.475507 Ok

NODO 9: collegamento travi orizzontali – pilastri di ballatoio intermedi

Analoga connessione si applica anche ai nodi 25 e 30, di collegamento tra la trave IPE, meno sollecitata di quella in analisi, e i pilastri del secondo ballatoio.

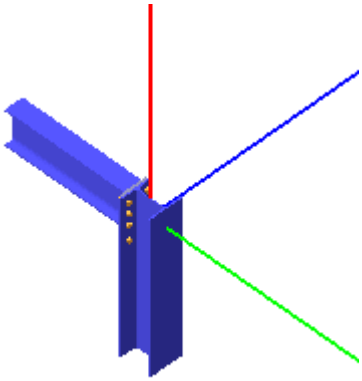

Colonna
Tipo di profilo: HEA 200
Materiale: Acciaio S275 f_y = 275 N/mm^2 f_t = 430 N/mm^2 g_{ov} = 1.25
Classe sezione: 1

Coefficienti di sicurezza utilizzati
g_{M0} = 1.05
g_{M1} = 1.10
g_{M2} = 1.25

Trave lato 2-
Tipo di profilo: IPE 220
Materiale: Acciaio S275 f_y = 275 N/mm^2 f_t = 430 N/mm^2 g_{ov} = 1.25
Classe sezione: 1

Flangia:
Materiale: Acciaio S275 f_y = 275 N/mm^2 f_t = 430 N/mm^2 g_{ov} = 1.25
Dimensioni (B x H x Sp): 160.0 x 300.0 x 16.0 mm
Spessore nervature verticali: 10.0 mm

Bullonature:
Viti cl. 8.8 Dadi 8 o 10 (f_{yb} = 640 N/mm^2, f_{tb} = 800 N/mm^2)
Diametro gambo Ø = 16 mm A_{res} = 156.8 mm^2 (ridotta per filettatura)
Diametro dado/testa d_m = 24 mm
Diametro foro $Ø_0$ = 17 mm

Rigidezza giunto (calcolata secondo EN 1993-1-8 : 2005 par. 6.3):
$S_{j,ini}$ = 21319940000 N mm / rad

Saldature:
Materiale: Acciaio S275 f_y = 275 N/mm^2 f_t = 430 N/mm^2 b_1 = 0.70 b_2 = 0.85
Spessore cordoni d'angolo s_c = 10 mm

Sollecitazioni nella sezione d'attacco dell'elemento:

Nodo.CMB	V2 [N]	V3 [N]	N [N]	M2 [N mm]	M3 [N mm]	T [N mm]
9.1	7582.7	-2059.2	4835.8	1091.0	-596643.4	-28200.0
9.2	7582.7	-2059.2	4835.8	1091.0	-596643.4	-28200.0
9.3	4662.1	2224.1	-4059.4	-1336.0	-2442101.0	30945.0
9.4	4662.1	2224.1	-4059.4	-1336.0	-2442101.0	30945.0
9.5	26800.1	-1683.9	6325.3	706.0	-5599991.0	-8358.0
9.6	26800.1	-1683.9	6325.3	706.0	-5599991.0	-8358.0
9.7	23879.6	2599.3	-2570.0	-1721.0	-7445439.0	50787.0
9.8	23879.6	2599.3	-2570.0	-1721.0	-7445439.0	50787.0
9.9	6169.8	-2078.2	4746.2	1120.0	-245695.0	-28517.0
9.10	6169.8	-2078.2	4746.2	1120.0	-245695.0	-28517.0
9.11	3249.3	2205.0	-4149.0	-1308.0	-2091317.0	30628.0
9.12	3249.3	2205.0	-4149.0	-1308.0	-2091317.0	30628.0
9.13	25387.3	-1703.0	6235.7	734.0	-5249207.0	-8675.0
9.14	25387.3	-1703.0	6235.7	734.0	-5249207.0	-8675.0
9.15	22466.7	2580.3	-2659.5	-1693.0	-7095664.0	50470.0
9.16	22466.7	2580.3	-2659.5	-1693.0	-7095664.0	50470.0
9.17	8556.2	-3487.0	7800.9	1900.0	18999.0	-47915.0
9.18	8556.2	-3487.0	7800.9	1900.0	18999.0	-47915.0

Viale Duca Alessandro n. 11 – 43123 Parma
Cell. 335 1403156 – E mail ing.concari@gmail.com
Sito web: studioaire.it – P.IVA 02561480340

9.19	3688.6	3651.8	-7024.5	-2145.0	-3057583.0	50659.0
9.20	3688.6	3651.8	-7024.5	-2145.0	-3057583.0	50659.0
9.21	22008.4	-3224.3	8843.5	1631.0	-3483202.0	-34025.0
9.22	22008.4	-3224.3	8843.5	1631.0	-3483202.0	-34025.0
9.23	17140.8	3914.5	-5981.9	-2414.0	-6559624.0	64549.0
9.24	17140.8	3914.5	-5981.9	-2414.0	-6559624.0	64549.0
9.25	7143.4	-3506.0	7711.3	1929.0	369586.0	-48231.0
9.26	7143.4	-3506.0	7711.3	1929.0	369586.0	-48231.0
9.27	2275.8	3632.8	-7114.1	-2117.0	-2706799.0	50343.0
9.28	2275.8	3632.8	-7114.1	-2117.0	-2706799.0	50343.0
9.29	20595.6	-3243.3	8753.9	1659.0	-3133418.0	-34342.0
9.30	20595.6	-3243.3	8753.9	1659.0	-3133418.0	-34342.0
9.31	15727.9	3895.5	-6071.4	-2386.0	-6209850.0	64232.0
9.32	15727.9	3895.5	-6071.4	-2386.0	-6209850.0	64232.0
9.33	21034.9	-1796.5	5878.4	822.0	-4098685.0	-14310.0
9.34	21034.9	-1796.5	5878.4	822.0	-4098685.0	-14310.0
9.35	18114.3	2486.7	-3016.8	-1605.0	-5945142.0	44834.0
9.36	18114.3	2486.7	-3016.8	-1605.0	-5945142.0	44834.0
9.37	19622.0	-1815.5	5788.8	850.0	-3747910.0	-14627.0
9.38	19622.0	-1815.5	5788.8	850.0	-3747910.0	-14627.0
9.39	16701.5	2467.7	-3106.4	-1577.0	-5594358.0	44517.0
9.40	16701.5	2467.7	-3106.4	-1577.0	-5594358.0	44517.0
9.41	4854.4	-2203.0	6417.6	-374.0	3057168.0	-25381.0
9.42	4854.4	-2203.0	6417.6	-374.0	3057168.0	-25381.0
9.43	1933.8	2080.2	-2477.6	-2801.0	1210711.0	33763.0
9.44	1933.8	2080.2	-2477.6	-2801.0	1210711.0	33763.0
9.45	24071.8	-1827.8	7907.0	-759.0	-1947179.0	-5539.0
9.46	24071.8	-1827.8	7907.0	-759.0	-1947179.0	-5539.0
9.47	21151.2	2455.5	-988.2	-3186.0	-3792636.0	53605.0
9.48	21151.2	2455.5	-988.2	-3186.0	-3792636.0	53605.0
9.49	3441.5	-2222.0	6328.0	-346.0	3407943.0	-25698.0
9.50	3441.5	-2222.0	6328.0	-346.0	3407943.0	-25698.0
9.51	521.0	2061.2	-2567.2	-2773.0	1561495.0	33447.0
9.52	521.0	2061.2	-2567.2	-2773.0	1561495.0	33447.0
9.53	22659.0	-1846.8	7817.4	-731.0	-1596395.0	-5856.0
9.54	22659.0	-1846.8	7817.4	-731.0	-1596395.0	-5856.0
9.55	19738.4	2436.5	-1077.8	-3158.0	-3441852.0	53289.0
9.56	19738.4	2436.5	-1077.8	-3158.0	-3441852.0	53289.0
9.57	5827.9	-3630.8	9382.6	435.0	3672651.0	-45096.0
9.58	5827.9	-3630.8	9382.6	435.0	3672651.0	-45096.0
9.59	960.3	3508.0	-5442.7	-3610.0	595795.5	53478.0
9.60	960.3	3508.0	-5442.7	-3610.0	595795.5	53478.0
9.61	19280.1	-3368.1	10425.3	165.0	169609.5	-31207.0
9.62	19280.1	-3368.1	10425.3	165.0	169609.5	-31207.0
9.63	14412.5	3770.7	-4400.1	-3880.0	-2906813.0	67367.0
9.64	14412.5	3770.7	-4400.1	-3880.0	-2906813.0	67367.0
9.65	4415.1	-3649.8	9293.1	463.0	4022435.0	-45413.0
9.66	4415.1	-3649.8	9293.1	463.0	4022435.0	-45413.0
9.67	-452.6	3489.0	-5532.3	-3582.0	946373.1	53161.0
9.68	-452.6	3489.0	-5532.3	-3582.0	946373.1	53161.0
9.69	17867.2	-3387.1	10335.7	193.0	520384.0	-31523.0
9.70	17867.2	-3387.1	10335.7	193.0	520384.0	-31523.0
9.71	12999.6	3751.7	-4489.7	-3852.0	-2556038.0	67051.0
9.72	12999.6	3751.7	-4489.7	-3852.0	-2556038.0	67051.0
9.73	3035.5	-2298.9	7472.1	-1351.0	5492373.0	-23502.0
9.74	3035.5	-2298.9	7472.1	-1351.0	5492373.0	-23502.0
9.75	115.0	1984.4	-1423.1	-3778.0	3646925.0	35642.0
9.76	115.0	1984.4	-1423.1	-3778.0	3646925.0	35642.0
9.77	16487.7	-2036.2	8514.7	-1621.0	1989751.0	-9613.0
9.78	16487.7	-2036.2	8514.7	-1621.0	1989751.0	-9613.0
9.79	13567.1	2247.1	-380.5	-4048.0	143874.5	49532.0
9.80	13567.1	2247.1	-380.5	-4048.0	143874.5	49532.0
9.81	1622.7	-2317.9	7382.5	-1323.0	5843157.0	-23819.0
9.82	1622.7	-2317.9	7382.5	-1323.0	5843157.0	-23819.0
9.83	-1297.9	1965.4	-1512.7	-3750.0	3996700.0	35326.0
9.84	-1297.9	1965.4	-1512.7	-3750.0	3996700.0	35326.0
9.85	15074.8	-2055.2	8425.1	-1593.0	2340328.0	-9929.0
9.86	15074.8	-2055.2	8425.1	-1593.0	2340328.0	-9929.0
9.87	12154.3	2228.0	-470.1	-4020.0	494513.5	49215.0
9.88	12154.3	2228.0	-470.1	-4020.0	494513.5	49215.0
9.89	18306.6	-1940.3	7460.2	-644.0	-445872.9	-11492.0
9.90	18306.6	-1940.3	7460.2	-644.0	-445872.9	-11492.0
9.91	15386.0	2342.9	-1435.0	-3071.0	-2291330.0	47653.0
9.92	15386.0	2342.9	-1435.0	-3071.0	-2291330.0	47653.0
9.93	16893.7	-1959.4	7370.6	-616.0	-95098.5	-11809.0
9.94	16893.7	-1959.4	7370.6	-616.0	-95098.5	-11809.0
9.95	13973.2	2323.9	-1524.6	-3043.0	-1940546.0	47336.0
9.96	13973.2	2323.9	-1524.6	-3043.0	-1940546.0	47336.0
9.97	12311.3	-2984.8	3918.2	-1128.0	-2280427.0	-20653.0
9.98	12311.3	-2984.8	3918.2	-1128.0	-2280427.0	-20653.0
9.99	9390.8	1298.4	-4977.0	-3556.0	-4126874.0	38491.0
9.100	9390.8	1298.4	-4977.0	-3556.0	-4126874.0	38491.0
9.101	31528.8	-2609.6	5407.6	-1514.0	-7284764.0	-811.0
9.102	31528.8	-2609.6	5407.6	-1514.0	-7284764.0	-811.0
9.103	28608.2	1673.7	-3487.6	-3941.0	-9132221.0	58333.0
9.104	28608.2	1673.7	-3487.6	-3941.0	-9132221.0	58333.0
9.105	10898.5	-3003.9	3828.6	-1100.0	-1929643.0	-20970.0
9.106	10898.5	-3003.9	3828.6	-1100.0	-1929643.0	-20970.0
9.107	7977.9	1279.4	-5066.6	-3527.0	-3776100.0	38174.0
9.108	7977.9	1279.4	-5066.6	-3527.0	-3776100.0	38174.0
9.109	30115.9	-2628.6	5318.0	-1485.0	-6933989.0	-1128.0
9.110	30115.9	-2628.6	5318.0	-1485.0	-6933989.0	-1128.0

Viale Duca Alessandro n. 11 – 43123 Parma
Cell. 335 1403156 – E mail ing.concari@gmail.com
Sito web: studioaire.it – P.IVA 02561480340

9.111	27195.3	1654.7	-3577.2	-3912.0	-8776446.0	58016.0
9.112	27195.3	1654.7	-3577.2	-3912.0	-8776446.0	58016.0
9.113	13284.9	-4412.6	6883.2	-319.0	-1664935.0	-40368.0
9.114	13284.9	-4412.6	6883.2	-319.0	-1664935.0	-40368.0
9.115	8417.3	2726.2	-7942.1	-4365.0	-4741357.0	58206.0
9.116	8417.3	2726.2	-7942.1	-4365.0	-4741357.0	58206.0
9.117	26737.1	-4149.9	7925.9	-589.0	-5167976.0	-26479.0
9.118	26737.1	-4149.9	7925.9	-589.0	-5167976.0	-26479.0
9.119	21869.4	2988.9	-6899.5	-4634.0	-8242407.0	72095.0
9.120	21869.4	2988.9	-6899.5	-4634.0	-8242407.0	72095.0
9.121	11872.0	-4431.6	6793.7	-291.0	-1315160.0	-40685.0
9.122	11872.0	-4431.6	6793.7	-291.0	-1315160.0	-40685.0
9.123	7004.4	2707.2	-8031.7	-4336.0	-4391582.0	57889.0
9.124	7004.4	2707.2	-8031.7	-4336.0	-4391582.0	57889.0
9.125	25324.2	-4168.9	7836.3	-561.0	-4817201.0	-26795.0
9.126	25324.2	-4168.9	7836.3	-561.0	-4817201.0	-26795.0
9.127	20456.6	2969.8	-6989.1	-4606.0	-7893623.0	71779.0
9.128	20456.6	2969.8	-6989.1	-4606.0	-7893623.0	71779.0
9.129	25763.5	-2722.2	4960.8	-1398.0	-5783468.0	-6764.0
9.130	25763.5	-2722.2	4960.8	-1398.0	-5783468.0	-6764.0
9.131	22843.0	1561.1	-3934.4	-3825.0	-7628915.0	52380.0
9.132	22843.0	1561.1	-3934.4	-3825.0	-7628915.0	52380.0
9.133	24350.7	-2741.2	4871.2	-1370.0	-5432684.0	-7081.0
9.134	24350.7	-2741.2	4871.2	-1370.0	-5432684.0	-7081.0
9.135	21430.1	1542.1	-4024.0	-3797.0	-7278141.0	52064.0
9.136	21430.1	1542.1	-4024.0	-3797.0	-7278141.0	52064.0
9.137	15463.8	-3601.9	3306.4	-2608.0	-3403939.0	-15622.0
9.138	15463.8	-3601.9	3306.4	-2608.0	-3403939.0	-15622.0
9.139	12543.2	681.3	-5588.8	-5035.0	-5249396.0	43522.0
9.140	12543.2	681.3	-5588.8	-5035.0	-5249396.0	43522.0
9.141	28916.0	-3339.3	4349.0	-2878.0	-6905980.0	-1733.0
9.142	28916.0	-3339.3	4349.0	-2878.0	-6905980.0	-1733.0
9.143	25995.4	944.0	-4546.2	-5305.0	-8750437.0	57411.0
9.144	25995.4	944.0	-4546.2	-5305.0	-8750437.0	57411.0
9.145	14050.9	-3621.0	3216.8	-2580.0	-3053165.0	-15939.0
9.146	14050.9	-3621.0	3216.8	-2580.0	-3053165.0	-15939.0
9.147	11130.3	662.3	-5678.4	-5007.0	-4898622.0	43205.0
9.148	11130.3	662.3	-5678.4	-5007.0	-4898622.0	43205.0
9.149	27503.1	-3358.3	4259.4	-2850.0	-6555206.0	-2050.0
9.150	27503.1	-3358.3	4259.4	-2850.0	-6555206.0	-2050.0
9.151	24582.5	925.0	-4635.8	-5277.0	-8404662.0	57095.0
9.152	24582.5	925.0	-4635.8	-5277.0	-8404662.0	57095.0
9.153	2481.8	-2937.4	3207.3	-19362.0	10295770.0	63868.0
9.154	-8199.9	-749.5	6776.3	-6513.0	16381010.0	40983.0
9.155	32992.9	1176.5	-4987.5	6017.0	-22725680.0	-22998.0
9.156	22311.2	3364.4	-1418.5	18866.0	-16640440.0	-45883.0
9.157	2921.2	-2769.8	3405.3	-17456.0	10967510.0	59103.0
9.158	-8639.3	-917.0	6578.4	-8419.0	15719270.0	45748.0
9.159	33432.3	1344.0	-4789.6	7923.0	-22053930.0	-27763.0
9.160	21871.9	3196.8	-1616.5	16960.0	-17302170.0	-41118.0
9.161	4534.1	-3717.4	3378.0	-24421.0	8801740.0	77092.0
9.162	-6147.6	-1529.5	6946.9	-11572.0	14885980.0	54207.0
9.163	30940.7	1956.5	-5158.1	11076.0	-21220630.0	-36222.0
9.164	20259.0	4144.4	-1589.2	23925.0	-15145400.0	-59107.0
9.165	4973.4	-3549.8	3575.9	-22515.0	9468473.0	72327.0
9.166	-6587.0	-1697.0	6749.0	-13479.0	14214230.0	58972.0
9.167	31380.0	2124.0	-4960.2	12982.0	-20558900.0	-40987.0
9.168	19819.6	3976.8	-1787.1	22019.0	-15807140.0	-54342.0
9.169	25622.7	-4050.1	-3824.6	-25470.0	-8355844.0	60165.0
9.170	-9982.9	3243.0	8071.9	17360.0	11921620.0	-16120.0
9.171	34776.0	-2815.9	-6283.1	-17856.0	-18266280.0	34105.0
9.172	-829.6	4477.1	5613.4	24974.0	2016188.0	-42180.0
9.173	26238.3	-4284.1	-3773.4	-26988.0	-8807362.0	64132.0
9.174	-9367.3	3009.0	8123.1	15842.0	11470110.0	-12153.0
9.175	34160.3	-2581.9	-6334.3	-16339.0	-17814770.0	30138.0
9.176	-1445.3	4711.1	5562.2	26492.0	2464697.0	-46147.0
9.177	27087.3	-3491.6	-3164.9	-19116.0	-6133707.0	44280.0
9.178	-11447.5	2684.5	7412.1	11006.0	9702488.0	-235.0
9.179	36240.6	-2257.5	-5623.3	-11502.0	-16037140.0	18220.0
9.180	-2294.2	3918.6	4953.7	18620.0	-206018.0	-26295.0
9.181	27702.9	-3725.6	-3113.7	-20634.0	-6583224.0	48247.0
9.182	-10831.9	2450.5	7463.3	9488.0	9250970.0	3732.0
9.183	35624.9	-2023.5	-5674.5	-9984.0	-15595630.0	14253.0
9.184	-2909.9	4152.6	4902.5	20138.0	242842.5	-30262.0

Calcolo resistenze

Resistenza a trazione dei bulloni $F_{tb,Rd} = 0.9 \bullet f_{tb} \bullet A_{res} / g_{M2} =$ 90333.1 N

Resistenza a punzonamento flangia $B_{pf,Rd} = 0.6 \bullet p \bullet d_m \bullet t_f \bullet f_{tk} / g_{M2} =$ 248995.1 N

Resistenza a punzonamento ala passante $B_{pa,Rd} = 0.6 \bullet p \bullet d_m \bullet t_a \bullet f_{tk} / g_{M2} =$ 155621.9 N

Bull.	$F_{f,Rd}$ [N]	$F_{t,Rd}$ [N]
1	51961.9	51961.9
2	42183.8	42183.8
3	21834.0	21834.0
4	42183.8	42183.8
5	51961.9	51961.9
6	42183.8	42183.8
7	21834.0	21834.0
8	42183.8	42183.8

Legenda

$F_{f,Rd} = M_{res,m} / (B_m \bullet R_m)$ resistenza a flessione flangia

$F_{t,Rd} = \min [F_{tb,Rd} , B_{pf,Rd} , B_{pa,Rd} , F_{f,Rd}]$ resistenza a trazione di progetto

Viale Duca Alessandro n. 11 – 43123 Parma
Cell. 335 1403156 – E mail ing.concari@gmail.com
Sito web: studioaire.it – P.IVA 02561480340

Resistenza a taglio dei bulloni $F_{vb,Rd} = 0.6 \bullet f_{tb} \bullet A_{res} / g_{M2} =$ 60222.1 N

Bull.	$F_{bf,x,Rd}$ [N]	$F_{ba,x,Rd}$ [N]	$F_{v,x,Rd}$ [N]	$F_{bf,y,Rd}$ [N]	$F_{ba,y,Rd}$ [N]	$F_{v,y,Rd}$ [N]
1	107921.6	121411.8	60222.1	125239.8	137600.0	60222.1
2	107921.6	121411.8	60222.1	212907.7	137600.0	60222.1
3	107921.6	121411.8	60222.1	212907.7	137600.0	60222.1
4	107921.6	121411.8	60222.1	176170.7	113857.3	60222.1
5	107921.6	121411.8	60222.1	125239.8	137600.0	60222.1
6	107921.6	121411.8	60222.1	212907.7	137600.0	60222.1
7	107921.6	121411.8	60222.1	212907.7	137600.0	60222.1
8	107921.6	121411.8	60222.1	176170.7	113857.3	60222.1

Legenda

$F_{bf,x,Rd} = k \bullet a \bullet f_{tk} \bullet Ø \bullet t_f / g_{M2}$ resistenza a rifollamento flangia in direzione x
$F_{ba,x,Rd} = k \bullet a \bullet f_{tk} \bullet Ø \bullet t_a / g_{M2}$ resistenza a rifollamento ala passante in direzione x
$F_{v,x,Rd} = \min [F_{vb,Rd} , F_{bf,x,Rd} , F_{ba,x,Rd}]$ resistenza a taglio di progetto in direzione x
$F_{bf,y,Rd} = k \bullet a \bullet f_{tk} \bullet Ø \bullet t_f / g_{M2}$ resistenza a rifollamento flangia in direzione y
$F_{ba,y,Rd} = k \bullet a \bullet f_{tk} \bullet Ø \bullet t_a / g_{M2}$ resistenza a rifollamento ala passante in direzione y
$F_{v,y,Rd} = \min [F_{vb,Rd} , F_{bf,y,Rd} , F_{ba,y,Rd}]$ resistenza a taglio di progetto in direzione y

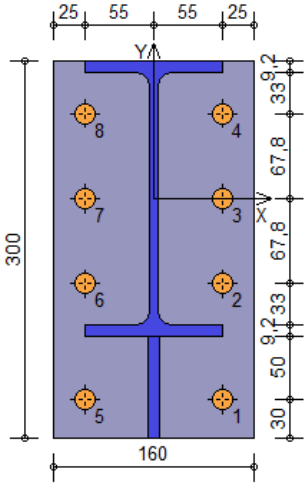

Verifiche sui bulloni

1-Taglio e trazione (Nodo n. 9, CMB n. 155)

Bull.	X [mm]	Y [mm]	$F_{v,Ed}$ [N]	$F_{v,Rd}$ [N]	$F_{t,Ed}$ [N]	$F_{t,Rd}$ [N]	FV_1	VER
1	55.00	-160.00	4141.3	60222.1	0.0	51961.9	0.068767	Ok
2	55.00	-67.80	4142.1	60222.1	9959.2	42183.8	0.237416	Ok
3	55.00	0.00	4142.8	60222.1	18492.2	21834.0	0.673752	Ok
4	55.00	67.80	4143.5	60222.1	27025.1	42183.8	0.526413	Ok
5	-55.00	-160.00	4110.0	60222.1	0.0	51961.9	0.068248	Ok
6	-55.00	-67.80	4110.9	60222.1	9952.9	42183.8	0.236792	Ok
7	-55.00	0.00	4111.5	60222.1	18485.9	21834.0	0.673029	Ok
8	-55.00	67.80	4112.3	60222.1	27018.9	42183.8	0.525789	Ok

2-Trazione (Nodo n. 9, CMB n. 155)

Bull.	X [mm]	Y [mm]	$F_{t,Ed}$ [N]	$F_{t,Rd}$ [N]	FV_2	VER
1	55.00	-160.00	0.0	51961.9	0.000000	Ok
2	55.00	-67.80	9959.2	42183.8	0.236091	Ok
3	55.00	0.00	18492.2	21834.0	0.846945	Ok
4	55.00	67.80	27025.1	42183.8	0.640652	Ok
5	-55.00	-160.00	0.0	51961.9	0.000000	Ok
6	-55.00	-67.80	9952.9	42183.8	0.235943	Ok
7	-55.00	0.00	18485.9	21834.0	0.846659	Ok
8	-55.00	67.80	27018.9	42183.8	0.640504	Ok

Legenda

$F_{v,Ed}$ forza di taglio agente sul bullone
$F_{v,Rd}$ resistenza a taglio di progetto del bullone
$F_{t,Ed}$ forza di trazione agente sul bullone
$F_{t,Rd}$ resistenza a trazione di progetto del bullone
$FV_1 = F_{v,Ed} / F_{v,Rd} + F_{t,Ed} / (1.4 \bullet F_{t,Rd})$
$FV_2 = F_{t,Ed} / F_{t,Rd}$
VER ® $FV_i \leq 1$

Verifiche sulle saldature profilo-flangia (versione beta)

Si considera la sezione di gola (avente altezza $a = s_c / 2^{0.5} = 7.071$) in posizione ribaltata: vengono considerate positive le tensioni normali di trazione e le tensioni tangenziali agenti verso destra e verso il basso. Tutte le tensioni sono espresse in N/mm^2.

Verifica formula (4.2.84) (Nodo n. 9, CMB n. 155)

Cordoni	Lung.[mm]	$n_\wedge$	$t_\wedge$	$t_{\|\|}$	FV_1	VER_1
Nervatura inferiore lato destro	70.0	-84.70	0.00	9.42	85.22	Ok
Nervatura inferiore lato sinistro	70.0	-84.70	0.00	9.42	85.22	Ok
Ala inferiore esterno	110.0	-51.13	0.00	0.62	51.13	Ok
Ala inferiore interno lato destro	40.1	-43.77	0.00	0.62	43.77	Ok
Ala inferiore interno lato sinistro	40.1	-43.95	0.00	0.62	43.96	Ok
Anima lato destro	177.6	-40.08	0.00	9.42	41.17	Ok
Anima lato sinistro	177.6	-40.08	0.00	9.42	41.17	Ok
Ala superiore interno lato destro	40.1	42.11	0.00	0.62	42.11	Ok
Ala superiore interno lato sinistro	40.1	41.93	0.00	0.62	41.93	Ok

Verifica formula (4.2.85) (Nodo n. 9, CMB n. 155)

Cordoni	Lung.[mm]	$n_\wedge$	$t_\wedge$	$t_{\|\|}$	FV_2	VER_2
Nervatura inferiore lato destro	70.0	-84.70	0.00	9.42	84.70	Ok
Nervatura inferiore lato sinistro	70.0	-84.70	0.00	9.42	84.70	Ok

Viale Duca Alessandro n. 11 – 43123 Parma
Cell. 335 1403156 – E mail ing.concari@gmail.com
Sito web: studioaire.it – P.IVA 02561480340

Ala inferiore esterno	110.0	-51.13	0.00	0.62	51.13	Ok
Ala inferiore interno lato destro	40.1	-43.77	0.00	0.62	43.77	Ok
Ala inferiore interno lato sinistro	40.1	-43.95	0.00	0.62	43.95	Ok
Anima lato destro	177.6	-40.08	0.00	9.42	40.08	Ok
Anima lato sinistro	177.6	-40.08	0.00	9.42	40.08	Ok
Ala superiore interno lato destro	40.1	42.11	0.00	0.62	42.11	Ok
Ala superiore interno lato sinistro	40.1	41.93	0.00	0.62	41.93	Ok

Legenda

$n_\wedge$ tensione normale perpendicolare all'asse del cordone
$t_\wedge$ tensione tangenziale perpendicolare all'asse del cordone
$t_{||}$ tensione tangenziale parallela all'asse del cordone
$FV_1 = (n_\wedge^2 + t_\wedge^2 + t_{||}^2)^{0.5}$
$FV_2 = ïn_\wedge ï + ït_\wedge ï$
VER_i ® $FV_i \le b_i \bullet f_{yk}$ ($b_1 \bullet f_{yk}$ = 192.50 N/mm^2 $b_2 \bullet f_{yk}$ = 233.75 N/mm^2)

Verifica del momento di progetto del giunto (Nodo n. 9, CMB n. 155)

Momento resistente del giunto $M_{j,Rd}$ = 37305570.0 N mm
Momento di progetto $M_{j,Ed}$ = 21849690.0 N mm
$M_{j,Ed} / M_{j,Rd}$ = 0.585695 Ok

NODO 14: collegamento travi orizzontali – pilastri di ballatoio intermedi

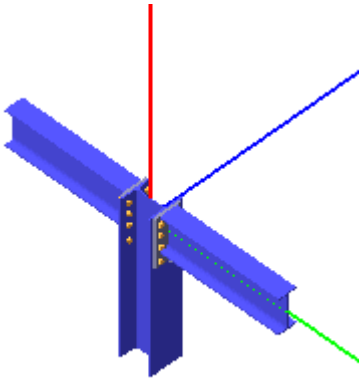

Colonna
Tipo di profilo: HEA 200
Materiale: Acciaio S275 f_y = 275 N/mm^2 f_t = 430 N/mm^2 g_{ov} = 1.25
Classe sezione: 1

Coefficienti di sicurezza utilizzati
g_{M0} = 1.05
g_{M1} = 1.10
g_{M2} = 1.25

Trave lato 2+
Tipo di profilo: IPE 220
Materiale: Acciaio S275 f_y = 275 N/mm^2 f_t = 430 N/mm^2 g_{ov} = 1.25
Classe sezione: 1

Flangia:
Materiale: Acciaio S275 f_y = 275 N/mm^2 f_t = 430 N/mm^2 g_{ov} = 1.25
Dimensioni (B x H x Sp): 160.0 x 300.0 x 16.0 mm
Spessore nervature verticali: 10.0 mm

Bullonature:
Viti cl. 8.8 Dadi 8 o 10 (f_{yb} = 640 N/mm^2, f_{tb} = 800 N/mm^2)
Diametro gambo Ø = 16 mm A_{res} = 156.8 mm^2 (ridotta per filettatura)
Diametro dado/testa d_m = 24 mm
Diametro foro $Ø_0$ = 17 mm

Rigidezza giunto (calcolata secondo EN 1993-1-8 : 2005 par. 6.3):
$S_{j,ini}$ = 21319940000 N mm / rad

Saldature:
Materiale: Acciaio S275 f_y = 275 N/mm^2 f_t = 430 N/mm^2 b_1 = 0.70 b_2 = 0.85
Spessore cordoni d'angolo s_c = 10 mm

Sollecitazioni nella sezione d'attacco dell'elemento:

Nodo.CMB	V2 [N]	V3 [N]	N [N]	M2 [N mm]	M3 [N mm]	T [N mm]
14.1	7822.7	513.1	4934.2	-28572.0	-752843.4	39831.0
14.2	7822.7	513.1	4934.2	-28572.0	-752843.4	39831.0
14.3	8103.2	-883.7	-4217.8	45316.0	-2771196.0	7757.0
14.4	8103.2	-883.7	-4217.8	45316.0	-2771196.0	7757.0
14.5	34758.8	-161.8	6318.1	1892.0	-6211914.0	85514.0
14.6	34758.8	-161.8	6318.1	1892.0	-6211914.0	85514.0
14.7	35039.3	-1558.6	-2833.8	75781.0	-8231267.0	53440.0
14.8	35039.3	-1558.6	-2833.8	75781.0	-8231267.0	53440.0
14.9	5985.1	555.9	4851.5	-30504.0	-346039.5	34340.0
14.10	5985.1	555.9	4851.5	-30504.0	-346039.5	34340.0

Viale Duca Alessandro n. 11 – 43123 Parma
Cell. 335 1403156 – E mail ing.concari@gmail.com
Sito web: studioaire.it – P.IVA 02561480340

14.11	6265.6	-840.9	-4300.5	43384.0	-2364768.0	2266.0
14.12	6265.6	-840.9	-4300.5	43384.0	-2364768.0	2266.0
14.13	32921.2	-119.0	6235.5	-40.0	-5804486.0	80023.0
14.14	32921.2	-119.0	6235.5	-40.0	-5804486.0	80023.0
14.15	33201.7	-1515.8	-2916.5	73849.0	-7825839.0	47949.0
14.16	33201.7	-1515.8	-2916.5	73849.0	-7825839.0	47949.0
14.17	7729.2	978.7	7984.8	-53202.0	-79726.0	50522.0
14.18	7729.2	978.7	7984.8	-53202.0	-79726.0	50522.0
14.19	8196.7	-1349.3	-7268.5	69946.0	-3444314.0	-2935.0
14.20	8196.7	-1349.3	-7268.5	69946.0	-3444314.0	-2935.0
14.21	26584.5	506.3	8953.6	-31877.0	-3900473.0	82501.0
14.22	26584.5	506.3	8953.6	-31877.0	-3900473.0	82501.0
14.23	27052.0	-1821.7	-6299.7	91271.0	-7266060.0	29043.0
14.24	27052.0	-1821.7	-6299.7	91271.0	-7266060.0	29043.0
14.25	5891.6	1021.5	7902.2	-55134.0	326916.0	45032.0
14.26	5891.6	1021.5	7902.2	-55134.0	326916.0	45032.0
14.27	6359.1	-1306.5	-7351.1	68014.0	-3037886.0	-8426.0
14.28	6359.1	-1306.5	-7351.1	68014.0	-3037886.0	-8426.0
14.29	24746.9	549.0	8871.0	-33809.0	-3494045.0	77010.0
14.30	24746.9	549.0	8871.0	-33809.0	-3494045.0	77010.0
14.31	25214.4	-1779.0	-6382.3	89339.0	-6858632.0	23553.0
14.32	25214.4	-1779.0	-6382.3	89339.0	-6858632.0	23553.0
14.33	26678.0	40.7	5902.9	-7247.0	-4573590.0	71809.0
14.34	26678.0	40.7	5902.9	-7247.0	-4573590.0	71809.0
14.35	26958.5	-1356.1	-3249.0	66642.0	-6592942.0	39735.0
14.36	26958.5	-1356.1	-3249.0	66642.0	-6592942.0	39735.0
14.37	24840.4	83.4	5820.3	-9179.0	-4167162.0	66318.0
14.38	24840.4	83.4	5820.3	-9179.0	-4167162.0	66318.0
14.39	25120.9	-1313.4	-3331.7	64709.0	-6186515.0	34244.0
14.40	25120.9	-1313.4	-3331.7	64709.0	-6186515.0	34244.0
14.41	10557.7	493.8	3646.8	-85028.0	-4152018.0	45974.0
14.42	10557.7	493.8	3646.8	-85028.0	-4152018.0	45974.0
14.43	10838.2	-903.0	-5505.2	-11139.0	-6171371.0	13900.0
14.44	10838.2	-903.0	-5505.2	-11139.0	-6171371.0	13900.0
14.45	37493.8	-181.1	5030.8	-54564.0	-9608089.0	91658.0
14.46	37493.8	-181.1	5030.8	-54564.0	-9608089.0	91658.0
14.47	37774.4	-1577.9	-4121.2	19325.0	-11631430.0	59583.0
14.48	37774.4	-1577.9	-4121.2	19325.0	-11631430.0	59583.0
14.49	8720.1	536.5	3564.2	-86960.0	-3745591.0	40484.0
14.50	8720.1	536.5	3564.2	-86960.0	-3745591.0	40484.0
14.51	9000.6	-860.3	-5587.8	-13072.0	-5764943.0	8409.0
14.52	9000.6	-860.3	-5587.8	-13072.0	-5764943.0	8409.0
14.53	35656.2	-138.4	4948.1	-56496.0	-9202661.0	86167.0
14.54	35656.2	-138.4	4948.1	-56496.0	-9202661.0	86167.0
14.55	35936.8	-1535.2	-4203.8	17393.0	-11226000.0	54092.0
14.56	35936.8	-1535.2	-4203.8	17393.0	-11226000.0	54092.0
14.57	10464.2	959.4	6697.5	-109658.0	-3479901.0	56666.0
14.58	10464.2	959.4	6697.5	-109658.0	-3479901.0	56666.0
14.59	10931.7	-1368.6	-8555.8	13490.0	-6844489.0	3209.0
14.60	10931.7	-1368.6	-8555.8	13490.0	-6844489.0	3209.0
14.61	29319.5	487.0	7666.3	-88332.0	-7304648.0	88644.0
14.62	29319.5	487.0	7666.3	-88332.0	-7304648.0	88644.0
14.63	29787.0	-1841.0	-7587.0	34815.0	-10670240.0	35187.0
14.64	29787.0	-1841.0	-7587.0	34815.0	-10670240.0	35187.0
14.65	8626.6	1002.1	6614.8	-111590.0	-3072473.0	51175.0
14.66	8626.6	1002.1	6614.8	-111590.0	-3072473.0	51175.0
14.67	9094.1	-1325.9	-8638.5	11558.0	-6438061.0	-2282.0
14.68	9094.1	-1325.9	-8638.5	11558.0	-6438061.0	-2282.0
14.69	27481.9	529.7	7583.6	-90265.0	-6894220.0	83153.0
14.70	27481.9	529.7	7583.6	-90265.0	-6894220.0	83153.0
14.71	27949.4	-1798.3	-7669.7	32883.0	-10254810.0	29696.0
14.72	27949.4	-1798.3	-7669.7	32883.0	-10254810.0	29696.0
14.73	12381.0	480.9	2788.6	-122665.0	-6418805.0	50070.0
14.74	12381.0	480.9	2788.6	-122665.0	-6418805.0	50070.0
14.75	12661.6	-915.9	-6363.4	-48777.0	-8438148.0	17996.0
14.76	12661.6	-915.9	-6363.4	-48777.0	-8438148.0	17996.0
14.77	31236.4	8.5	3757.4	-101340.0	-10242540.0	82048.0
14.78	31236.4	8.5	3757.4	-101340.0	-10242540.0	82048.0
14.79	31516.9	-1388.3	-5394.6	-27452.0	-12255900.0	49974.0
14.80	31516.9	-1388.3	-5394.6	-27452.0	-12255900.0	49974.0
14.81	10543.4	523.7	2705.9	-124597.0	-6012377.0	44579.0
14.82	10543.4	523.7	2705.9	-124597.0	-6012377.0	44579.0
14.83	10824.0	-873.1	-6446.0	-50709.0	-8030721.0	12505.0
14.84	10824.0	-873.1	-6446.0	-50709.0	-8030721.0	12505.0
14.85	29398.8	51.2	3674.7	-103272.0	-9837114.0	76557.0
14.86	29398.8	51.2	3674.7	-103272.0	-9837114.0	76557.0
14.87	29679.3	-1345.6	-5477.3	-29384.0	-11850470.0	44483.0
14.88	29679.3	-1345.6	-5477.3	-29384.0	-11850470.0	44483.0
14.89	29413.0	21.4	4615.6	-63703.0	-7975765.0	77953.0
14.90	29413.0	21.4	4615.6	-63703.0	-7975765.0	77953.0
14.91	29693.5	-1375.4	-4536.4	10186.0	-9989117.0	45878.0
14.92	29693.5	-1375.4	-4536.4	10186.0	-9989117.0	45878.0
14.93	27575.4	64.1	4532.9	-65635.0	-7570337.0	72462.0
14.94	27575.4	64.1	4532.9	-65635.0	-7570337.0	72462.0
14.95	27855.9	-1332.7	-4619.0	8254.0	-9583689.0	40387.0
14.96	27855.9	-1332.7	-4619.0	8254.0	-9583689.0	40387.0
14.97	11737.1	-480.1	4218.4	109590.0	-2391976.0	3800.0
14.98	11737.1	-480.1	4218.4	109590.0	-2391976.0	3800.0
14.99	12017.6	-1876.9	-4933.5	183479.0	-4410328.0	-28274.0
14.100	12017.6	-1876.9	-4933.5	183479.0	-4410328.0	-28274.0
14.101	38673.2	-1155.0	5602.4	140055.0	-7846046.0	49483.0
14.102	38673.2	-1155.0	5602.4	140055.0	-7846046.0	49483.0

Viale Duca Alessandro n. 11 – 43123 Parma
Cell. 335 1403156 – E mail ing.concari@gmail.com
Sito web: studioaire.it – P.IVA 02561480340

14.103	38953.8	-2551.8	-3549.6	213943.0	-9869389.0	17409.0
14.104	38953.8	-2551.8	-3549.6	213943.0	-9869389.0	17409.0
14.105	9899.5	-437.3	4135.8	107658.0	-1985548.0	-1691.0
14.106	9899.5	-437.3	4135.8	107658.0	-1985548.0	-1691.0
14.107	10180.0	-1834.1	-5016.2	181547.0	-4003900.0	-33765.0
14.108	10180.0	-1834.1	-5016.2	181547.0	-4003900.0	-33765.0
14.109	36835.6	-1112.2	5519.8	138123.0	-7440618.0	43992.0
14.110	36835.6	-1112.2	5519.8	138123.0	-7440618.0	43992.0
14.111	37116.2	-2509.0	-3632.2	212011.0	-9463961.0	11918.0
14.112	37116.2	-2509.0	-3632.2	212011.0	-9463961.0	11918.0
14.113	11643.6	-14.5	7269.1	84961.0	-1718858.0	14491.0
14.114	11643.6	-14.5	7269.1	84961.0	-1718858.0	14491.0
14.115	12111.1	-2342.5	-7984.2	208108.0	-5083446.0	-38966.0
14.116	12111.1	-2342.5	-7984.2	208108.0	-5083446.0	-38966.0
14.117	30498.9	-486.9	8237.9	106286.0	-5539605.0	46470.0
14.118	30498.9	-486.9	8237.9	106286.0	-5539605.0	46470.0
14.119	30966.4	-2814.9	-7015.4	229434.0	-8908192.0	-6987.0
14.120	30966.4	-2814.9	-7015.4	229434.0	-8908192.0	-6987.0
14.121	9806.0	28.3	7186.4	83029.0	-1312430.0	9001.0
14.122	9806.0	28.3	7186.4	83029.0	-1312430.0	9001.0
14.123	10273.5	-2299.7	-8066.9	206176.0	-4677018.0	-44457.0
14.124	10273.5	-2299.7	-8066.9	206176.0	-4677018.0	-44457.0
14.125	28661.3	-444.2	8155.2	104354.0	-5133177.0	40979.0
14.126	28661.3	-444.2	8155.2	104354.0	-5133177.0	40979.0
14.127	29128.8	-2772.2	-7098.1	227501.0	-8502764.0	-12478.0
14.128	29128.8	-2772.2	-7098.1	227501.0	-8502764.0	-12478.0
14.129	30592.4	-952.5	5187.2	130915.0	-6212722.0	35778.0
14.130	30592.4	-952.5	5187.2	130915.0	-6212722.0	35778.0
14.131	30872.9	-2349.3	-3964.7	204804.0	-8227074.0	3704.0
14.132	30872.9	-2349.3	-3964.7	204804.0	-8227074.0	3704.0
14.133	28754.8	-909.8	5104.6	128983.0	-5806294.0	30287.0
14.134	28754.8	-909.8	5104.6	128983.0	-5806294.0	30287.0
14.135	29035.3	-2306.6	-4047.4	202872.0	-7821646.0	-1787.0
14.136	29035.3	-2306.6	-4047.4	202872.0	-7821646.0	-1787.0
14.137	14346.7	-1142.2	3741.3	201699.0	-3485063.0	-20221.0
14.138	14346.7	-1142.2	3741.3	201699.0	-3485063.0	-20221.0
14.139	14627.2	-2539.0	-5410.7	275587.0	-5503416.0	-52295.0
14.140	14627.2	-2539.0	-5410.7	275587.0	-5503416.0	-52295.0
14.141	33202.0	-1614.6	4710.1	223024.0	-7305810.0	11758.0
14.142	33202.0	-1614.6	4710.1	223024.0	-7305810.0	11758.0
14.143	33482.5	-3011.4	-4441.9	296912.0	-9329162.0	-20317.0
14.144	33482.5	-3011.4	-4441.9	296912.0	-9329162.0	-20317.0
14.145	12509.1	-1099.4	3658.6	199767.0	-3077636.0	-25711.0
14.146	12509.1	-1099.4	3658.6	199767.0	-3077636.0	-25711.0
14.147	12789.6	-2496.2	-5493.3	273655.0	-5096988.0	-57786.0
14.148	12789.6	-2496.2	-5493.3	273655.0	-5096988.0	-57786.0
14.149	31364.4	-1571.9	4627.4	221092.0	-6899382.0	6267.0
14.150	31364.4	-1571.9	4627.4	221092.0	-6899382.0	6267.0
14.151	31644.9	-2968.7	-4524.6	294980.0	-8913734.0	-25808.0
14.152	31644.9	-2968.7	-4524.6	294980.0	-8913734.0	-25808.0
14.153	36613.3	-6451.6	-3731.8	-173639.0	-22631740.0	128231.0
14.154	27424.1	-2657.1	-1734.5	-592421.0	-17524710.0	207912.0
14.155	6375.5	1832.2	3392.7	629673.0	10449670.0	-134760.0
14.156	-2813.7	5626.6	5390.1	210891.0	15562700.0	-55078.0
14.157	37221.4	-5811.9	-3904.1	-257592.0	-22433970.0	136332.0
14.158	26816.0	-3296.8	-1562.2	-508469.0	-17722480.0	199812.0
14.159	6983.6	2471.8	3220.4	545721.0	10647440.0	-126659.0
14.160	-3421.8	4987.0	5562.3	294843.0	15364930.0	-63179.0
14.161	36413.3	1765.6	-4337.6	-296183.0	-22000740.0	166495.0
14.162	27224.1	5560.1	-2340.2	-714965.0	-16893710.0	246177.0
14.163	6575.5	-6385.1	3998.5	752217.0	9813673.0	-173024.0
14.164	-2613.8	-2590.6	5995.8	333435.0	14921690.0	-93343.0
14.165	37021.4	2405.3	-4509.9	-380135.0	-21802970.0	174596.0
14.166	26616.0	4920.5	-2168.0	-631012.0	-17091480.0	238076.0
14.167	7183.5	-5745.4	3826.2	668264.0	10011430.0	-164923.0
14.168	-3221.8	-3230.3	6168.1	417387.0	14723930.0	-101444.0
14.169	36750.9	-7979.2	-3568.5	596099.0	-17018660.0	-56778.0
14.170	6120.0	4669.1	3089.4	-799841.0	12911.0	208828.0
14.171	27679.5	-5494.1	-1431.2	837093.0	-7091448.0	-135675.0
14.172	-2951.3	7154.2	5226.8	-558847.0	9939627.0	129931.0
14.173	36690.9	-5514.0	-3750.3	559336.0	-16824360.0	-45299.0
14.174	6060.0	7134.3	2907.7	-836604.0	203727.0	220307.0
14.175	27739.5	-7959.2	-1249.4	873855.9	-7281748.0	-147155.0
14.176	-2891.3	4689.1	5408.5	-522084.0	9745327.0	118451.0
14.177	38777.7	-5846.9	-4142.7	316258.0	-16356120.0	-29775.0
14.178	4093.2	2536.8	3663.6	-520000.0	-648146.0	181825.0
14.179	29706.4	-3361.8	-2005.3	557252.0	-6429892.0	-108672.0
14.180	-4978.1	5022.0	5800.9	-279006.0	9278080.0	102927.0
14.181	38717.7	-3381.7	-4324.4	279495.0	-16161820.0	-18296.0
14.182	4033.2	5002.0	3481.8	-556763.0	-457110.0	193304.0
14.183	29766.4	-5827.0	-1823.6	594015.0	-6621192.0	-120151.0
14.184	-4918.2	2556.8	5982.6	-242243.0	9086771.0	91448.0

Calcolo resistenze

Resistenza a trazione dei bulloni $F_{tb,Rd} = 0.9 \bullet f_{tb} \bullet A_{res} / g_{M2} =$ 90333.1 N

Resistenza a punzonamento flangia $B_{pf,Rd} = 0.6 \bullet p \bullet d_m \bullet t_f \bullet f_{tk} / g_{M2} =$ 248995.1 N

Resistenza a punzonamento ala passante $B_{pa,Rd} = 0.6 \bullet p \bullet d_m \bullet t_a \bullet f_{tk} / g_{M2} =$ 155621.9 N

Bull.	$F_{f,Rd}$ [N]	$F_{t,Rd}$ [N]
1	51961.9	51961.9
2	42183.8	42183.8
3	21834.0	21834.0
4	42183.8	42183.8

Viale Duca Alessandro n. 11 – 43123 Parma
Cell. 335 1403156 – E mail ing.concari@gmail.com
Sito web: studioaire.it – P.IVA 02561480340

5	51961.9	51961.9
6	42183.8	42183.8
7	21834.0	21834.0
8	42183.8	42183.8

Legenda

$F_{f,Rd} = M_{res,m} / (B_m \bullet R_m)$ resistenza a flessione flangia

$F_{t,Rd} = \min [F_{tb,Rd} , B_{pf,Rd} , B_{pa,Rd} , F_{f,Rd}]$ resistenza a trazione di progetto

Resistenza a taglio dei bulloni $F_{vb,Rd} = 0.6 \bullet f_{tb} \bullet A_{res} / g_{M2} =$ 60222.1 N

Bull.	$F_{bf,x,Rd}$ [N]	$F_{ba,x,Rd}$ [N]	$F_{v,x,Rd}$ [N]	$F_{bf,y,Rd}$ [N]	$F_{ba,y,Rd}$ [N]	$F_{v,y,Rd}$ [N]
1	107921.6	121411.8	60222.1	125239.8	137600.0	60222.1
2	107921.6	121411.8	60222.1	212907.7	137600.0	60222.1
3	107921.6	121411.8	60222.1	212907.7	137600.0	60222.1
4	107921.6	121411.8	60222.1	176170.7	113857.3	60222.1
5	107921.6	121411.8	60222.1	125239.8	137600.0	60222.1
6	107921.6	121411.8	60222.1	212907.7	137600.0	60222.1
7	107921.6	121411.8	60222.1	212907.7	137600.0	60222.1
8	107921.6	121411.8	60222.1	176170.7	113857.3	60222.1

Legenda

$F_{bf,x,Rd} = k \bullet a \bullet f_{tk} \bullet Ø \bullet t_f / g_{M2}$ resistenza a rifollamento flangia in direzione x

$F_{ba,x,Rd} = k \bullet a \bullet f_{tk} \bullet Ø \bullet t_a / g_{M2}$ resistenza a rifollamento ala passante in direzione x

$F_{v,x,Rd} = \min [F_{vb,Rd} , F_{bf,x,Rd} , F_{ba,x,Rd}]$ resistenza a taglio di progetto in direzione x

$F_{bf,y,Rd} = k \bullet a \bullet f_{tk} \bullet Ø \bullet t_f / g_{M2}$ resistenza a rifollamento flangia in direzione y

$F_{ba,y,Rd} = k \bullet a \bullet f_{tk} \bullet Ø \bullet t_a / g_{M2}$ resistenza a rifollamento ala passante in direzione y

$F_{v,y,Rd} = \min [F_{vb,Rd} , F_{bf,y,Rd} , F_{ba,y,Rd}]$ resistenza a taglio di progetto in direzione y

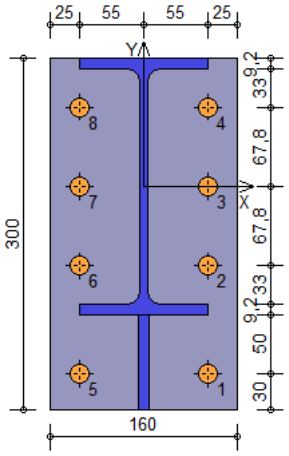

Verifiche sui bulloni

1-Taglio e trazione (Nodo n. 14, CMB n. 153)

Bull.	X [mm]	Y [mm]	$F_{v,Ed}$ [N]	$F_{v,Rd}$ [N]	$F_{t,Ed}$ [N]	$F_{t,Rd}$ [N]	FV_1	VER
1	55.00	-160.00	4531.7	60222.1	0.0	51961.9	0.075250	Ok
2	55.00	-67.80	4553.9	60222.1	9934.1	42183.8	0.243829	Ok
3	55.00	0.00	4573.1	60222.1	18502.6	21834.0	0.681239	Ok
4	55.00	67.80	4594.7	60222.1	27071.1	42183.8	0.534683	Ok
5	-55.00	-160.00	4704.3	60222.1	0.0	51961.9	0.078116	Ok
6	-55.00	-67.80	4725.7	60222.1	10115.3	42183.8	0.249750	Ok
7	-55.00	0.00	4744.2	60222.1	18683.8	21834.0	0.690008	Ok
8	-55.00	67.80	4765.0	60222.1	27252.3	42183.8	0.540580	Ok

2-Trazione (Nodo n. 14, CMB n. 153)

Bull.	X [mm]	Y [mm]	$F_{t,Ed}$ [N]	$F_{t,Rd}$ [N]	FV_2	VER
1	55.00	-160.00	0.0	51961.9	0.000000	Ok
2	55.00	-67.80	9934.1	42183.8	0.235496	Ok
3	55.00	0.00	18502.6	21834.0	0.847424	Ok
4	55.00	67.80	27071.1	42183.8	0.641743	Ok
5	-55.00	-160.00	0.0	51961.9	0.000000	Ok
6	-55.00	-67.80	10115.3	42183.8	0.239791	Ok
7	-55.00	0.00	18683.8	21834.0	0.855722	Ok
8	-55.00	67.80	27252.3	42183.8	0.646038	Ok

Legenda

$F_{v,Ed}$ forza di taglio agente sul bullone

$F_{v,Rd}$ resistenza a taglio di progetto del bullone

$F_{t,Ed}$ forza di trazione agente sul bullone

$F_{t,Rd}$ resistenza a trazione di progetto del bullone

$FV_1 = F_{v,Ed} / F_{v,Rd} + F_{t,Ed} / (1.4 \bullet F_{t,Rd})$

$FV_2 = F_{t,Ed} / F_{t,Rd}$

VER ® $FV_i \leq 1$

Verifiche sulle saldature profilo-flangia (versione beta)

Si considera la sezione di gola (avente altezza $a = s_c / 2^{0.5} = 7.071$) in posizione ribaltata: vengono considerate positive le tensioni normali di trazione e le tensioni tangenziali agenti verso destra e verso il basso. Tutte le tensioni sono espresse in N/mm^2.

Verifica formula (4.2.84) (Nodo n. 14, CMB n. 153)

Cordoni	Lung.[mm]	$n_\wedge$	$t_\wedge$	$t_{\|\|}$	FV_1	VER_1
Nervatura inferiore lato destro	70.0	-84.12	0.00	10.46	84.77	Ok
Nervatura inferiore lato sinistro	70.0	-84.12	0.00	10.46	84.77	Ok
Ala inferiore esterno	110.0	-50.54	0.00	-3.38	50.66	Ok
Ala inferiore interno lato destro	40.1	-47.51	0.00	-3.38	47.63	Ok
Ala inferiore interno lato sinistro	40.1	-42.28	0.00	-3.38	42.42	Ok
Anima lato destro	177.6	-39.68	0.00	10.46	41.04	Ok
Anima lato sinistro	177.6	-39.68	0.00	10.46	41.04	Ok

Viale Duca Alessandro n. 11 – 43123 Parma
Cell. 335 1403156 – E mail ing.concari@gmail.com
Sito web: studioaire.it – P.IVA 02561480340

Ala superiore interno lato destro	40.1	40.90	0.00	-3.38	41.04	Ok
Ala superiore interno lato sinistro	40.1	46.13	0.00	-3.38	46.26	Ok

Verifica formula (4.2.85) (Nodo n. 14, CMB n. 153)

Cordoni	Lung.[mm]	$n_\wedge$	$t_\wedge$	$t_{\|\|}$	FV_2	VER_2
Nervatura inferiore lato destro	70.0	-84.12	0.00	10.46	84.12	Ok
Nervatura inferiore lato sinistro	70.0	-84.12	0.00	10.46	84.12	Ok
Ala inferiore esterno	110.0	-50.54	0.00	-3.38	50.54	Ok
Ala inferiore interno lato destro	40.1	-47.51	0.00	-3.38	47.51	Ok
Ala inferiore interno lato sinistro	40.1	-42.28	0.00	-3.38	42.28	Ok
Anima lato destro	177.6	-39.68	0.00	10.46	39.68	Ok
Anima lato sinistro	177.6	-39.68	0.00	10.46	39.68	Ok
Ala superiore interno lato destro	40.1	40.90	0.00	-3.38	40.90	Ok
Ala superiore interno lato sinistro	40.1	46.13	0.00	-3.38	46.13	Ok

Legenda

$n_\wedge$ tensione normale perpendicolare all'asse del cordone
$t_\wedge$ tensione tangenziale perpendicolare all'asse del cordone
$t_{||}$ tensione tangenziale parallela all'asse del cordone
$FV_1 = (n_\wedge^2 + t_\wedge^2 + t_{||}^2)^{0.5}$
$FV_2 = \sqrt{n_\wedge^2 + t_\wedge^2}$
VER_i ® $FV_i \le b_i \bullet f_{yk}$ ($b_1 \bullet f_{yk}$ = 192.50 N/mm^2 $b_2 \bullet f_{yk}$ = 233.75 N/mm^2)

Verifica del momento di progetto del giunto (Nodo n. 14, CMB n. 153)

Momento resistente del giunto $M_{j,Rd}$ = 37319590.0 N mm
Momento di progetto $M_{j,Ed}$ = 21976050.0 N mm
$M_{j,Ed} / M_{j,Rd}$ = 0.588861 Ok

Trave lato 2-
Tipo di profilo: IPE 220
Materiale: Acciaio S275 f_y = 275 N/mm^2 f_t = 430 N/mm^2 g_{ov} = 1.25
Classe sezione: 1

Flangia:
Materiale: Acciaio S275 f_y = 275 N/mm^2 f_t = 430 N/mm^2 g_{ov} = 1.25
Dimensioni (B x H x Sp): 160.0 x 300.0 x 16.0 mm
Spessore nervature verticali: 10.0 mm

Bullonature:
Viti cl. 8.8 Dadi 8 o 10 (f_{yb} = 640 N/mm^2, f_{tb} = 800 N/mm^2)
Diametro gambo Ø = 16 mm A_{res} = 156.8 mm^2 (ridotta per filettatura)
Diametro dado/testa d_m = 24 mm
Diametro foro $Ø_0$ = 17 mm

Rigidezza giunto (calcolata secondo EN 1993-1-8 : 2005 par. 6.3):
$S_{j,ini}$ = 21319940000 N mm / rad

Saldature:
Materiale: Acciaio S275 f_y = 275 N/mm^2 f_t = 430 N/mm^2 b_1 = 0.70 b_2 = 0.85
Spessore cordoni d'angolo s_c = 10 mm

Sollecitazioni nella sezione d'attacco dell'elemento:

Nodo.CMB	V2 [N]	V3 [N]	N [N]	M2 [N mm]	M3 [N mm]	T [N mm]
14.1	862.8	-15.8	26.5	26734.0	-422067.0	-10563.0
14.2	862.8	-15.8	26.5	26734.0	-422067.0	-10563.0
14.3	853.5	16.9	-51.2	-42362.0	-411118.5	-3461.0
14.4	853.5	16.9	-51.2	-42362.0	-411118.5	-3461.0
14.5	2503.5	-12.9	-17.3	-1692.0	-1589168.0	-27377.0
14.6	2503.5	-12.9	-17.3	-1692.0	-1589168.0	-27377.0
14.7	2494.2	19.8	-95.0	-70788.0	-1579051.0	-20275.0
14.8	2494.2	19.8	-95.0	-70788.0	-1579051.0	-20275.0
14.9	664.8	-16.0	29.4	28538.0	-325927.0	-8945.0
14.10	664.8	-16.0	29.4	28538.0	-325927.0	-8945.0
14.11	655.5	16.8	-48.4	-40559.0	-314978.5	-1843.0
14.12	655.5	16.8	-48.4	-40559.0	-314978.5	-1843.0
14.13	2305.5	-13.1	-14.4	112.0	-1492978.0	-25758.0
14.14	2305.5	-13.1	-14.4	112.0	-1492978.0	-25758.0
14.15	2296.1	19.7	-92.1	-68985.0	-1482871.0	-18657.0
14.16	2296.1	19.7	-92.1	-68985.0	-1482871.0	-18657.0
14.17	865.9	-26.8	52.4	49767.0	-425716.5	-12930.0
14.18	865.9	-26.8	52.4	49767.0	-425716.5	-12930.0
14.19	850.4	27.8	-77.1	-65394.0	-407469.0	-1094.0
14.20	850.4	27.8	-77.1	-65394.0	-407469.0	-1094.0
14.21	2014.4	-24.7	21.8	29868.0	-1242632.0	-24700.0
14.22	2014.4	-24.7	21.8	29868.0	-1242632.0	-24700.0
14.23	1998.8	29.8	-107.8	-85293.0	-1225114.0	-12863.0
14.24	1998.8	29.8	-107.8	-85293.0	-1225114.0	-12863.0
14.25	667.9	-26.9	55.3	51570.0	-329576.5	-11312.0
14.26	667.9	-26.9	55.3	51570.0	-329576.5	-11312.0
14.27	652.3	27.7	-74.3	-63591.0	-311338.5	524.0
14.28	652.3	27.7	-74.3	-63591.0	-311338.5	524.0
14.29	1816.4	-24.8	24.6	31672.0	-1146442.0	-23082.0
14.30	1816.4	-24.8	24.6	31672.0	-1146442.0	-23082.0
14.31	1800.8	29.7	-104.9	-83489.0	-1128924.0	-11245.0
14.32	1800.8	29.7	-104.9	-83489.0	-1128924.0	-11245.0
14.33	2011.3	-13.8	-4.1	6836.0	-1238927.0	-22332.0
14.34	2011.3	-13.8	-4.1	6836.0	-1238927.0	-22332.0
14.35	2002.0	18.9	-81.9	-62260.0	-1228810.0	-15231.0
14.36	2002.0	18.9	-81.9	-62260.0	-1228810.0	-15231.0
14.37	1813.3	-13.9	-1.3	8639.0	-1142737.0	-20714.0
14.38	1813.3	-13.9	-1.3	8639.0	-1142737.0	-20714.0
14.39	1803.9	18.8	-79.0	-60457.0	-1132630.0	-13612.0
14.40	1803.9	18.8	-79.0	-60457.0	-1132630.0	-13612.0

Viale Duca Alessandro n. 11 – 43123 Parma
Cell. 335 1403156 – E mail ing.concari@gmail.com
Sito web: studioaire.it – P.IVA 02561480340

14.41	858.9	-51.5	305.5	82472.0	-415921.5	-9186.0
14.42	858.9	-51.5	305.5	82472.0	-415921.5	-9186.0
14.43	849.6	-18.7	227.8	13375.0	-404973.0	-2084.0
14.44	849.6	-18.7	227.8	13375.0	-404973.0	-2084.0
14.45	2499.6	-48.6	261.7	54046.0	-1583538.0	-26000.0
14.46	2499.6	-48.6	261.7	54046.0	-1583538.0	-26000.0
14.47	2490.2	-15.8	184.0	-15051.0	-1572431.0	-18898.0
14.48	2490.2	-15.8	184.0	-15051.0	-1572431.0	-18898.0
14.49	660.9	-51.6	308.4	84275.0	-319781.5	-7568.0
14.50	660.9	-51.6	308.4	84275.0	-319781.5	-7568.0
14.51	651.5	-18.9	230.6	15178.0	-308842.5	-466.0
14.52	651.5	-18.9	230.6	15178.0	-308842.5	-466.0
14.53	2301.5	-48.7	264.6	55849.0	-1487358.0	-24382.0
14.54	2301.5	-48.7	264.6	55849.0	-1487358.0	-24382.0
14.55	2292.2	-16.0	186.8	-13248.0	-1476241.0	-17280.0
14.56	2292.2	-16.0	186.8	-13248.0	-1476241.0	-17280.0
14.57	862.0	-62.4	331.4	105504.0	-419571.0	-11553.0
14.58	862.0	-62.4	331.4	105504.0	-419571.0	-11553.0
14.59	846.5	-7.8	201.8	-9657.0	-401323.5	283.0
14.60	846.5	-7.8	201.8	-9657.0	-401323.5	283.0
14.61	2010.5	-60.3	300.8	85606.0	-1237003.0	-23323.0
14.62	2010.5	-60.3	300.8	85606.0	-1237003.0	-23323.0
14.63	1994.9	-5.8	171.2	-29555.0	-1218485.0	-11486.0
14.64	1994.9	-5.8	171.2	-29555.0	-1218485.0	-11486.0
14.65	664.0	-62.5	334.3	107307.0	-323430.0	-9935.0
14.66	664.0	-62.5	334.3	107307.0	-323430.0	-9935.0
14.67	648.4	-7.9	204.7	-7854.0	-305193.0	1901.0
14.68	648.4	-7.9	204.7	-7854.0	-305193.0	1901.0
14.69	1812.4	-60.5	303.6	87409.0	-1140822.0	-21705.0
14.70	1812.4	-60.5	303.6	87409.0	-1140822.0	-21705.0
14.71	1796.9	-5.9	174.1	-27752.0	-1122295.0	-9868.0
14.72	1796.9	-5.9	174.1	-27752.0	-1122295.0	-9868.0
14.73	856.3	-75.2	491.5	119630.0	-411823.5	-8268.0
14.74	856.3	-75.2	491.5	119630.0	-411823.5	-8268.0
14.75	846.9	-42.5	413.7	50534.0	-400885.5	-1166.0
14.76	846.9	-42.5	413.7	50534.0	-400885.5	-1166.0
14.77	2004.7	-73.2	460.8	99732.0	-1229554.0	-20038.0
14.78	2004.7	-73.2	460.8	99732.0	-1229554.0	-20038.0
14.79	1995.4	-40.5	383.1	30635.0	-1218437.0	-12936.0
14.80	1995.4	-40.5	383.1	30635.0	-1218437.0	-12936.0
14.81	658.2	-75.3	494.3	121433.0	-315693.0	-6650.0
14.82	658.2	-75.3	494.3	121433.0	-315693.0	-6650.0
14.83	648.9	-42.6	416.6	52337.0	-304744.5	452.0
14.84	648.9	-42.6	416.6	52337.0	-304744.5	452.0
14.85	1806.7	-73.3	463.7	101535.0	-1133364.0	-18420.0
14.86	1806.7	-73.3	463.7	101535.0	-1133364.0	-18420.0
14.87	1797.4	-40.6	386.0	32439.0	-1122247.0	-11318.0
14.88	1797.4	-40.6	386.0	32439.0	-1122247.0	-11318.0
14.89	2007.4	-49.4	274.9	62574.0	-1233297.0	-20956.0
14.90	2007.4	-49.4	274.9	62574.0	-1233297.0	-20956.0
14.91	1998.0	-16.7	197.1	-6523.0	-1222190.0	-13854.0
14.92	1998.0	-16.7	197.1	-6523.0	-1222190.0	-13854.0
14.93	1809.3	-49.6	277.7	64377.0	-1137117.0	-19338.0
14.94	1809.3	-49.6	277.7	64377.0	-1137117.0	-19338.0
14.95	1800.0	-16.8	200.0	-4720.0	-1126000.0	-12236.0
14.96	1800.0	-16.8	200.0	-4720.0	-1126000.0	-12236.0
14.97	860.3	304.8	114.7	-111041.0	-421052.5	-6803.0
14.98	860.3	304.8	114.7	-111041.0	-421052.5	-6803.0
14.99	850.9	337.5	37.0	-180137.0	-410114.5	299.0
14.100	850.9	337.5	37.0	-180137.0	-410114.5	299.0
14.101	2500.9	307.7	70.9	-139467.0	-1588415.0	-23617.0
14.102	2500.9	307.7	70.9	-139467.0	-1588415.0	-23617.0
14.103	2491.6	340.4	-6.8	-208563.0	-1577298.0	-16515.0
14.104	2491.6	340.4	-6.8	-208563.0	-1577298.0	-16515.0
14.105	662.2	304.7	117.5	-109237.0	-324922.0	-5185.0
14.106	662.2	304.7	117.5	-109237.0	-324922.0	-5185.0
14.107	652.9	337.4	39.8	-178334.0	-313974.5	1917.0
14.108	652.9	337.4	39.8	-178334.0	-313974.5	1917.0
14.109	2302.9	307.6	73.8	-137663.0	-1492225.0	-21998.0
14.110	2302.9	307.6	73.8	-137663.0	-1492225.0	-21998.0
14.111	2293.5	340.3	-4.0	-206760.0	-1481118.0	-14897.0
14.112	2293.5	340.3	-4.0	-206760.0	-1481118.0	-14897.0
14.113	863.4	293.9	140.6	-88008.0	-424702.0	-9170.0
14.114	863.4	293.9	140.6	-88008.0	-424702.0	-9170.0
14.115	847.8	348.4	11.0	-203169.0	-406465.0	2666.0
14.116	847.8	348.4	11.0	-203169.0	-406465.0	2666.0
14.117	2011.8	295.9	110.0	-107907.0	-1241879.0	-20940.0
14.118	2011.8	295.9	110.0	-107907.0	-1241879.0	-20940.0
14.119	1996.3	350.5	-19.6	-223068.0	-1223352.0	-9103.0
14.120	1996.3	350.5	-19.6	-223068.0	-1223352.0	-9103.0
14.121	665.3	293.8	143.5	-86205.0	-328571.5	-7552.0
14.122	665.3	293.8	143.5	-86205.0	-328571.5	-7552.0
14.123	649.8	348.3	13.9	-201366.0	-310325.0	4284.0
14.124	649.8	348.3	13.9	-201366.0	-310325.0	4284.0
14.125	1813.8	295.8	112.8	-106103.0	-1145689.0	-19322.0
14.126	1813.8	295.8	112.8	-106103.0	-1145689.0	-19322.0
14.127	1798.2	350.4	-16.8	-221264.0	-1127171.0	-7485.0
14.128	1798.2	350.4	-16.8	-221264.0	-1127171.0	-7485.0
14.129	2008.7	306.8	84.1	-130939.0	-1238174.0	-18573.0
14.130	2008.7	306.8	84.1	-130939.0	-1238174.0	-18573.0
14.131	1999.4	339.6	6.3	-200035.0	-1227057.0	-11471.0
14.132	1999.4	339.6	6.3	-200035.0	-1227057.0	-11471.0

Viale Duca Alessandro n. 11 – 43123 Parma
Cell. 335 1403156 – E mail ing.concari@gmail.com
Sito web: studioaire.it – P.IVA 02561480340

14.133	1810.7	306.7	86.9	-129136.0	-1141984.0	-16954.0
14.134	1810.7	306.7	86.9	-129136.0	-1141984.0	-16954.0
14.135	1801.3	339.4	9.2	-198232.0	-1130877.0	-9853.0
14.136	1801.3	339.4	9.2	-198232.0	-1130877.0	-9853.0
14.137	858.5	518.6	173.5	-202891.0	-420389.5	-4296.0
14.138	858.5	518.6	173.5	-202891.0	-420389.5	-4296.0
14.139	849.2	551.3	95.7	-271987.0	-409441.0	2806.0
14.140	849.2	551.3	95.7	-271987.0	-409441.0	2806.0
14.141	2007.0	520.6	142.8	-222789.0	-1237335.0	-16066.0
14.142	2007.0	520.6	142.8	-222789.0	-1237335.0	-16066.0
14.143	1997.7	553.3	65.1	-291885.0	-1226219.0	-8964.0
14.144	1997.7	553.3	65.1	-291885.0	-1226219.0	-8964.0
14.145	660.5	518.5	176.3	-201087.0	-324249.5	-2678.0
14.146	660.5	518.5	176.3	-201087.0	-324249.5	-2678.0
14.147	651.2	551.2	98.6	-270184.0	-313301.0	4424.0
14.148	651.2	551.2	98.6	-270184.0	-313301.0	4424.0
14.149	1809.0	520.5	145.7	-220986.0	-1141145.0	-14448.0
14.150	1809.0	520.5	145.7	-220986.0	-1141145.0	-14448.0
14.151	1799.6	553.2	67.9	-290082.0	-1131038.0	-7346.0
14.152	1799.6	553.2	67.9	-290082.0	-1131038.0	-7346.0
14.153	1190.4	-424.5	676.5	175560.0	-710538.9	15316.0
14.154	1236.9	-1106.3	458.1	604354.0	-740100.4	6802.0
14.155	1395.8	1109.4	-512.1	-639117.0	-834799.0	-31041.0
14.156	1442.3	427.6	-730.5	-210322.0	-863981.6	-39554.0
14.157	1196.1	-598.1	650.3	264674.0	-713874.5	14496.0
14.158	1231.2	-932.7	484.3	515241.0	-736765.0	7622.0
14.159	1401.5	935.8	-538.3	-550003.0	-838133.5	-31861.0
14.160	1436.7	601.2	-704.3	-299436.0	-861015.4	-38734.0
14.161	1192.2	-550.7	631.0	300055.0	-710092.0	16986.0
14.162	1238.7	-1232.4	412.7	728849.0	-739653.4	8472.0
14.163	1394.0	1235.5	-466.7	-763612.0	-835246.0	-32711.0
14.164	1440.6	553.8	-685.0	-334817.0	-865143.0	-41224.0
14.165	1197.9	-724.2	604.9	389169.0	-713427.6	16165.0
14.166	1233.0	-1058.9	438.8	639736.0	-736318.0	9292.0
14.167	1399.7	1062.0	-492.8	-674498.0	-838581.6	-33531.0
14.168	1434.9	727.3	-658.9	-423931.0	-861462.5	-40404.0
14.169	1208.1	907.7	515.2	-609837.0	-719535.5	9024.0
14.170	1363.1	-1364.7	-212.6	819478.0	-818073.5	-19355.0
14.171	1269.7	1367.9	158.6	-854240.1	-756815.5	-4883.0
14.172	1424.7	-904.6	-569.2	575075.0	-855353.5	-33262.0
14.173	1208.6	869.8	501.5	-572489.0	-719406.1	9524.0
14.174	1363.6	-1402.6	-226.2	856826.0	-817943.0	-18854.0
14.175	1269.1	1405.7	172.2	-891588.9	-756955.5	-5384.0
14.176	1424.2	-866.7	-555.6	537727.0	-855484.0	-33763.0
14.177	1227.0	329.2	428.0	-312791.0	-730663.1	6290.0
14.178	1344.1	-786.3	-125.5	522432.0	-806956.5	-16621.0
14.179	1288.7	789.4	71.5	-557194.0	-767933.4	-7617.0
14.180	1405.7	-326.1	-482.1	278029.0	-844235.4	-30528.0
14.181	1227.6	291.4	414.4	-275443.0	-730523.0	6791.0
14.182	1344.7	-824.1	-139.1	559780.0	-806816.5	-16120.0
14.183	1288.1	827.3	85.1	-594543.0	-768073.5	-8118.0
14.184	1405.2	-288.3	-468.4	240680.0	-844365.9	-31029.0

Calcolo resistenze

Resistenza a trazione dei bulloni $F_{tb,Rd} = 0.9 \bullet f_{tb} \bullet A_{res} / g_{M2} =$ 90333.1 N

Resistenza a punzonamento flangia $B_{pf,Rd} = 0.6 \bullet p \bullet d_m \bullet t_f \bullet f_{tk} / g_{M2} =$ 248995.1 N

Resistenza a punzonamento ala passante $B_{pa,Rd} = 0.6 \bullet p \bullet d_m \bullet t_a \bullet f_{tk} / g_{M2} =$ 155621.9 N

Bull.	$F_{f,Rd}$ [N]	$F_{t,Rd}$ [N]
1	51961.9	51961.9
2	42183.8	42183.8
3	21834.0	21834.0
4	42183.8	42183.8
5	51961.9	51961.9
6	42183.8	42183.8
7	21834.0	21834.0
8	42183.8	42183.8

Legenda

$F_{f,Rd} = M_{res,m} / (B_m \bullet R_m)$ resistenza a flessione flangia

$F_{t,Rd} = \min [F_{tb,Rd} , B_{pf,Rd} , B_{pa,Rd} , F_{f,Rd}]$ resistenza a trazione di progetto

Resistenza a taglio dei bulloni $F_{vb,Rd} = 0.6 \bullet f_{tb} \bullet A_{res} / g_{M2} =$ 60222.1 N

Bull.	$F_{bf,x,Rd}$ [N]	$F_{ba,x,Rd}$ [N]	$F_{v,x,Rd}$ [N]	$F_{bf,y,Rd}$ [N]	$F_{ba,y,Rd}$ [N]	$F_{v,y,Rd}$ [N]
1	107921.6	121411.8	60222.1	125239.8	137600.0	60222.1
2	107921.6	121411.8	60222.1	212907.7	137600.0	60222.1
3	107921.6	121411.8	60222.1	212907.7	137600.0	60222.1
4	107921.6	121411.8	60222.1	176170.7	113857.3	60222.1
5	107921.6	121411.8	60222.1	125239.8	137600.0	60222.1
6	107921.6	121411.8	60222.1	212907.7	137600.0	60222.1
7	107921.6	121411.8	60222.1	212907.7	137600.0	60222.1
8	107921.6	121411.8	60222.1	176170.7	113857.3	60222.1

Legenda

$F_{bf,x,Rd} = k \bullet a \bullet f_{tk} \bullet Ø \bullet t_f / g_{M2}$ resistenza a rifollamento flangia in direzione x

$F_{ba,x,Rd} = k \bullet a \bullet f_{tk} \bullet Ø \bullet t_a / g_{M2}$ resistenza a rifollamento ala passante in direzione x

$F_{v,x,Rd} = \min [F_{vb,Rd} , F_{bf,x,Rd} , F_{ba,x,Rd}]$ resistenza a taglio di progetto in direzione x

$F_{bf,y,Rd} = k \bullet a \bullet f_{tk} \bullet Ø \bullet t_f / g_{M2}$ resistenza a rifollamento flangia in direzione y

$F_{ba,y,Rd} = k \bullet a \bullet f_{tk} \bullet Ø \bullet t_a / g_{M2}$ resistenza a rifollamento ala passante in direzione y

$F_{v,y,Rd} = \min [F_{vb,Rd} , F_{bf,y,Rd} , F_{ba,y,Rd}]$ resistenza a taglio di progetto in direzione y

Viale Duca Alessandro n. 11 – 43123 Parma
Cell. 335 1403156 – E mail ing.concari@gmail.com
Sito web: studioaire.it – P.IVA 02561480340

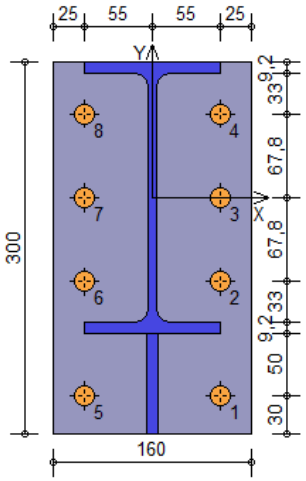

Verifiche sui bulloni

1-Taglio e trazione (Nodo n. 14, CMB n. 175)

Bull.	X [mm]	Y [mm]	$F_{v,Ed}$ [N]	$F_{v,Rd}$ [N]	$F_{t,Ed}$ [N]	$F_{t,Rd}$ [N]	FV_1	VER
1	55.00	-160.00	233.4	60222.1	0.0	51961.9	0.003876	Ok
2	55.00	-67.80	237.8	60222.1	34.7	42183.8	0.004537	Ok
3	55.00	0.00	241.2	60222.1	207.6	21834.0	0.010795	Ok
4	55.00	67.80	244.5	60222.1	380.4	42183.8	0.010502	Ok
5	-55.00	-160.00	228.4	60222.1	1488.5	51961.9	0.024254	Ok
6	-55.00	-67.80	232.9	60222.1	1723.6	42183.8	0.033052	Ok
7	-55.00	0.00	236.3	60222.1	1896.4	21834.0	0.065965	Ok
8	-55.00	67.80	239.7	60222.1	2069.3	42183.8	0.039019	Ok

2-Trazione (Nodo n. 14, CMB n. 175)

Bull.	X [mm]	Y [mm]	$F_{t,Ed}$ [N]	$F_{t,Rd}$ [N]	FV_2	VER
1	55.00	-160.00	0.0	51961.9	0.000000	Ok
2	55.00	-67.80	34.7	42183.8	0.000823	Ok
3	55.00	0.00	207.6	21834.0	0.009507	Ok
4	55.00	67.80	380.4	42183.8	0.009019	Ok
5	-55.00	-160.00	1488.5	51961.9	0.028646	Ok
6	-55.00	-67.80	1723.6	42183.8	0.040859	Ok
7	-55.00	0.00	1896.4	21834.0	0.086857	Ok
8	-55.00	67.80	2069.3	42183.8	0.049054	Ok

Legenda

$F_{v,Ed}$ forza di taglio agente sul bullone
$F_{v,Rd}$ resistenza a taglio di progetto del bullone
$F_{t,Ed}$ forza di trazione agente sul bullone
$F_{t,Rd}$ resistenza a trazione di progetto del bullone
$FV_1 = F_{v,Ed} / F_{v,Rd} + F_{t,Ed} / (1.4 \bullet F_{t,Rd})$
$FV_2 = F_{t,Ed} / F_{t,Rd}$
VER ® $FV_i \leq 1$

Verifiche sulle saldature profilo-flangia (versione beta)

Si considera la sezione di gola (avente altezza $a = s_c / 2^{0.5} = 7.071$) in posizione ribaltata: vengono considerate positive le tensioni normali di trazione e le tensioni tangenziali agenti verso destra e verso il basso. Tutte le tensioni sono espresse in N/mm^2.

Verifica formula (4.2.84) (Nodo n. 14, CMB n. 175)

Cordoni	Lung.[mm]	$n_\wedge$	$t_\wedge$	$t_{\|\|}$	FV_1	VER_1
Nervatura inferiore lato destro	70.0	-2.76	0.00	0.36	2.78	Ok
Nervatura inferiore lato sinistro	70.0	-2.76	0.00	0.36	2.78	Ok
Ala inferiore esterno	110.0	19.49	0.00	0.74	19.50	Ok
Ala inferiore interno lato destro	40.1	-22.52	0.00	0.74	22.53	Ok
Ala inferiore interno lato sinistro	40.1	19.73	0.00	0.74	19.74	Ok
Anima lato destro	177.6	1.34	0.00	0.36	1.38	Ok
Anima lato sinistro	177.6	1.34	0.00	0.36	1.38	Ok
Ala superiore interno lato destro	40.1	-19.66	0.00	0.74	19.68	Ok
Ala superiore interno lato sinistro	40.1	22.58	0.00	0.74	22.60	Ok

Verifica formula (4.2.85) (Nodo n. 14, CMB n. 175)

Cordoni	Lung.[mm]	$n_\wedge$	$t_\wedge$	$t_{\|\|}$	FV_2	VER_2
Nervatura inferiore lato destro	70.0	-2.76	0.00	0.36	2.76	Ok
Nervatura inferiore lato sinistro	70.0	-2.76	0.00	0.36	2.76	Ok
Ala inferiore esterno	110.0	19.49	0.00	0.74	19.49	Ok
Ala inferiore interno lato destro	40.1	-22.52	0.00	0.74	22.52	Ok
Ala inferiore interno lato sinistro	40.1	19.73	0.00	0.74	19.73	Ok
Anima lato destro	177.6	1.34	0.00	0.36	1.34	Ok
Anima lato sinistro	177.6	1.34	0.00	0.36	1.34	Ok
Ala superiore interno lato destro	40.1	-19.66	0.00	0.74	19.66	Ok
Ala superiore interno lato sinistro	40.1	22.58	0.00	0.74	22.58	Ok

Legenda

$n_\wedge$ tensione normale perpendicolare all'asse del cordone
$t_\wedge$ tensione tangenziale perpendicolare all'asse del cordone
$t_{||}$ tensione tangenziale parallela all'asse del cordone
$FV_1 = (n_\wedge^2 + t_\wedge^2 + t_{||}^2)^{0.5}$
$FV_2 = ïn_\wedge ï + ït_\wedge ï$
VER_i ® $FV_i \leq b_i \bullet f_{yk}$ ($b_1 \bullet f_{yk} = 192.50$ N/mm^2 $b_2 \bullet f_{yk} = 233.75$ N/mm^2)

Verifica del momento di progetto del giunto (Nodo n. 14, CMB n. 175)

Momento resistente del giunto	$M_{j,Rd}$ =	19650600.0 N mm
Momento di progetto	$M_{j,Ed}$ =	891588.9 N mm

$M_{j,Ed} / M_{j,Rd}$ = 0.045372 Ok

Viale Duca Alessandro n. 11 – 43123 Parma
Cell. 335 1403156 – E mail ing.concari@gmail.com
Sito web: studioaire.it – P.IVA 02561480340

Collegamento cosciali-fondazione

Resistenza complessiva =min ($F_{v,Rd}$; $F_{b,Rd}$)= 60,288 KN

F_{Ed} (sull'intera unione) = 29,49 kN

Dividendo la sollecitazione di taglio per il numero dei tirafondi si ottiene l'azione sul singolo tirafondo: F_{Ed} (singolo tirafondo)= 4,92 KN

F_{Ed}/F_{Rd} = 0.082 < 1 ok

Collegamento cosciale su travi orizzontali

Resistenza complessiva = min ($F_{v,Rd}$; $F_{b,Rd}$)= 32,37 KN

F_{Ed} (sull'intera unione) = 33,44 kN

Dividendo la sollecitazione di taglio per il numero dei bulloni si ottiene l'azione sul singolo bullone: F_{Ed} (singolo bullone)= 8,36 KN << $F_{v,Rd}$ verificato

F_{Ed} (singolo bullone)= 8,36 KN

F_{Ed}/F_{Rd} = 0.26 < 1 ok

Collegamento travi UPN di chiusura dei ballatoi

Resistenza complessiva =min ($F_{v,Rd}$; $F_{b,Rd}$)= 32,37 KN

F_{Ed} (sull'intera unione) = 3,55 kN

Dividendo la sollecitazione di taglio per il numero dei bulloni si ottiene l'azione sul singolo bullone: F_{Ed} (singolo bullone)= 0,89 KN << $F_{v,Rd}$ ok

F_{Ed} (singolo bullone)= 0,89 KN

F_{Ed}/F_{Rd} = 0.027 ok

Collegamento gradini su cosciali

Resistenza complessiva =min ($F_{v,Rd}$; $F_{b,Rd}$)= 13,76 KN

F_{Ed} (sull'intera unione) = 37,25 kN

Dividendo la sollecitazione di taglio per il numero dei bulloni si ottiene l'azione sul singolo bullone: F_{Ed} (singolo bullone)= 12,42 KN << $F_{v,Rd}$ ok

F_{Ed} (singolo bullone)= 12,42 kN daN

F_{Ed}/F_{Rd} = 0.902 ok

Viale Duca Alessandro n. 11 – 43123 Parma
Cell. 335 1403156 – E mail ing.concari@gmail.com
Sito web: studioaire.it – P.IVA 02561480340

NODO 18: collegamento pilastri-fondazione

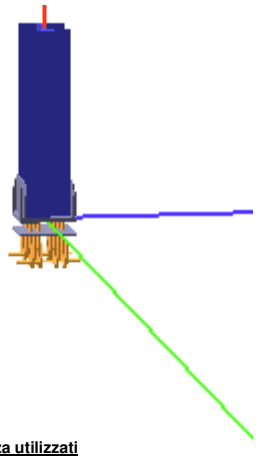

Coefficienti di sicurezza utilizzati
γ_{M0} = 1.05
γ_{M1} = 1.10
γ_{M2} = 1.25

Colonna
Tipo di profilo: HEA 200
Materiale: Acciaio S275 f_y = 275 N/mm^2 f_t = 430 N/mm^2 γ_{ov} = 1.25
Classe sezione: 1

Flangia:
Materiale: Acciaio S275 f_y = 275 N/mm^2 f_t = 430 N/mm^2 γ_{ov} = 1.25
Dimensioni (B x H x Sp): 250.0 x 250.0 x 20.0 mm
Spessore nervature verticali: 10.0 mm
Spessore nervature orizzontali: 10.0 mm

Bullonature:
Viti cl. 8.8 Dadi 8 o 10 (f_{yb} = 640 N/mm^2, f_{tb} = 800 N/mm^2)
Diametro gambo Ø = 16 mm A_{res} = 156.8 mm^2 (ridotta per filettatura)
Diametro dado/testa d_m = 24 mm
Diametro foro $Ø_0$ = 17 mm

Rigidezza giunto (calcolata secondo EN 1993-1-8 : 2005 par. 6.3):
$S_{j,ini}$ non calcolabile

Saldature:
Materiale: Acciaio S275 f_y = 275 N/mm^2 f_t = 430 N/mm^2 β_1 = 0.70 β_2 = 0.85
Spessore cordoni d'angolo s_c = 10 mm

Sollecitazioni:

Nodo.CMB	V2 [N]	V3 [N]	N [N]	M2 [N mm]	M3 [N mm]	T [N mm]
18.1	-3133.8	-63.5	-28370.9	107713.0	3545000.0	99.0
18.2	-4192.1	86.3	-29000.9	-175127.0	5826000.0	737.0
18.3	-5628.7	-103.1	-46025.8	188433.0	6321000.0	228.0
18.4	-6686.9	46.7	-46655.8	-94408.0	8602000.0	866.0
18.5	-2410.7	-48.8	-21823.8	82856.0	2727000.0	76.0
18.6	-3468.9	100.9	-22453.8	-199984.0	5008000.0	714.0
18.7	-4905.5	-88.4	-39478.6	163576.0	5503000.0	205.0
18.8	-5963.7	61.3	-40108.6	-119265.0	7784000.0	843.0
18.9	-4880.3	-91.2	-40729.3	164217.0	5488000.0	189.0
18.10	-5938.5	58.5	-41359.3	-118624.0	7769000.0	827.0
18.11	-4157.1	-76.6	-34182.2	139360.0	4670000.0	167.0
18.12	-5215.3	73.2	-34812.2	-143480.0	6951000.0	804.0
18.13	-3138.0	3023.3	-22294.2	-5607000.0	3583000.0	5447.0
18.14	-4196.3	3173.0	-22924.2	-5889000.0	5864000.0	6085.0
18.15	-5632.9	2983.6	-39949.1	-5526000.0	6359000.0	5576.0
18.16	-6691.1	3133.4	-40579.1	-5809000.0	8640000.0	6213.0
18.17	-2414.9	3037.9	-15747.1	-5631000.0	2765000.0	5424.0
18.18	-3473.1	3187.6	-16377.1	-5914000.0	5045000.0	6062.0
18.19	-4909.7	2998.3	-33401.9	-5551000.0	5541000.0	5553.0
18.20	-5967.9	3148.0	-34031.9	-5834000.0	7821000.0	6191.0
18.21	-3140.9	5081.1	-18243.0	-9416000.0	3608000.0	9012.0
18.22	-4199.1	5230.8	-18873.1	-9699000.0	5889000.0	9650.0
18.23	-4887.3	5053.3	-30601.5	-9360000.0	5551000.0	9103.0
18.24	-5945.5	5203.1	-31231.5	-9643000.0	7832000.0	9740.0
18.25	-2417.7	5095.7	-11695.9	-9441000.0	2790000.0	8990.0
18.26	-3475.9	5245.5	-12325.9	-9724000.0	5071000.0	9627.0
18.27	-4164.1	5068.0	-24054.3	-9385000.0	4733000.0	9080.0
18.28	-5222.3	5217.7	-24684.3	-9667000.0	7014000.0	9717.0
18.29	-4884.5	2995.5	-34652.6	-5550000.0	5526000.0	5537.0
18.30	-5942.7	3145.3	-35282.6	-5833000.0	7807000.0	6175.0
18.31	-4161.3	3010.2	-28105.5	-5575000.0	4708000.0	5514.0
18.32	-5219.5	3159.9	-28735.5	-5858000.0	6989000.0	6152.0
18.33	-3129.1	-3561.8	-35257.8	6584000.0	3502000.0	-5961.0
18.34	-4187.3	-3412.0	-35887.8	6301000.0	5783000.0	-5324.0
18.35	-5623.9	-3601.4	-52912.7	6665000.0	6278000.0	-5833.0

Viale Duca Alessandro n. 11 – 43123 Parma
Cell. 335 1403156 – E mail ing.concari@gmail.com
Sito web: studioaire.it – P.IVA 02561480340

18.36	-6682.2	-3451.6	-53542.7	6382000.0	8559000.0	-5195.0
18.37	-2405.9	-3547.1	-28710.7	6559000.0	2684000.0	-5984.0
18.38	-3464.1	-3397.4	-29340.7	6276000.0	4965000.0	-5347.0
18.39	-4900.8	-3586.7	-46365.6	6640000.0	5460000.0	-5856.0
18.40	-5959.0	-3437.0	-46995.6	6357000.0	7741000.0	-5218.0
18.41	-4875.5	-3589.5	-47616.2	6640000.0	5445000.0	-5871.0
18.42	-5933.7	-3439.8	-48246.3	6358000.0	7726000.0	-5234.0
18.43	-4152.3	-3574.8	-41069.1	6616000.0	4627000.0	-5894.0
18.44	-5210.5	-3425.1	-41699.1	6333000.0	6908000.0	-5257.0
18.45	-3125.9	-5894.0	-39849.1	10900000.0	3473000.0	-10002.0
18.46	-4184.1	-5744.2	-40479.1	10620000.0	5754000.0	-9364.0
18.47	-4872.3	-5921.7	-52207.5	10960000.0	5417000.0	-9912.0
18.48	-5930.5	-5771.9	-52837.5	10680000.0	7697000.0	-9274.0
18.49	-2402.7	-5879.3	-33302.0	10880000.0	2655000.0	-10025.0
18.50	-3460.9	-5729.6	-33932.0	10590000.0	4936000.0	-9387.0
18.51	-4149.1	-5907.0	-45660.4	10930000.0	4599000.0	-9935.0
18.52	-5207.3	-5757.3	-46290.4	10650000.0	6879000.0	-9297.0
18.53	1905.2	-12.4	-20228.8	31829.0	-7211000.0	11131.0
18.54	2036.7	-4451.0	-27323.8	8183000.0	-7491000.0	7002.0
18.55	-9982.6	4481.4	-31119.6	-8255000.0	17600000.0	-6066.0
18.56	-9851.2	42.8	-38214.6	-103237.0	17320000.0	-10195.0
18.57	666.7	682.8	-19631.9	-1253000.0	-4675000.0	10983.0
18.58	3275.2	-5146.3	-27920.8	9468000.0	-10030000.0	7150.0
18.59	-11221.2	5176.7	-30522.6	-9539000.0	20130000.0	-6214.0
18.60	-8612.6	-652.5	-38811.6	1181000.0	14780000.0	-10047.0
18.61	2224.4	1279.8	-20248.2	-2355000.0	-7896000.0	6312.0
18.62	2355.9	-3158.8	-27343.2	5797000.0	-8176000.0	2183.0
18.63	-10301.8	3189.2	-31100.2	-5868000.0	18280000.0	-1247.0
18.64	-10170.4	-1249.4	-38195.2	2283000.0	18000000.0	-5376.0
18.65	985.9	1975.1	-19651.3	-3639000.0	-5360000.0	6164.0
18.66	3594.4	-3854.1	-27940.2	7081000.0	-10710000.0	2331.0
18.67	-11540.4	3884.4	-30503.2	-7153000.0	20820000.0	-1395.0
18.68	-8931.8	-1944.7	-38792.1	3568000.0	15470000.0	-5228.0
18.69	-2408.9	6738.7	-15763.1	-12380000.0	1799000.0	9928.0
18.70	-1970.7	-8056.5	-39413.1	14790000.0	866026.0	-3833.0
18.71	-5975.2	8086.9	-19030.3	-14860000.0	9241000.0	4769.0
18.72	-5537.1	-6708.3	-42680.3	12310000.0	8309000.0	-8992.0
18.73	-2313.1	7126.4	-15768.9	-13090000.0	1593000.0	8482.0
18.74	-1875.0	-7668.8	-39418.9	14080000.0	660474.0	-5279.0
18.75	-6071.0	7699.2	-19024.5	-14150000.0	9447000.0	6215.0
18.76	-5632.9	-7096.0	-42674.5	13020000.0	8514000.0	-7546.0
18.77	-6537.4	9056.3	-13773.2	-16660000.0	10250000.0	9435.0
18.78	2157.8	-10374.1	-41403.0	19070000.0	-7586000.0	-3340.0
18.79	-10103.8	10404.5	-17040.5	-19150000.0	17690000.0	4276.0
18.80	-1408.6	-9025.9	-44670.2	16590000.0	-143724.0	-8499.0
18.81	-6441.6	9444.0	-13779.1	-17380000.0	10050000.0	7990.0
18.82	2253.6	-9986.4	-41408.8	18360000.0	-7792000.0	-4786.0
18.83	-10199.5	10016.8	-17034.7	-18430000.0	17900000.0	5722.0
18.84	-1504.3	-9413.6	-44664.4	17300000.0	61827.0	-7054.0

Calcolo resistenze

Resistenza a trazione dei bulloni $F_{tb,Rd} = 0.9 \cdot f_{tb} \cdot A_{res} / \gamma_{M2} =$ 90333.1 N

Resistenza a punzonamento flangia $B_{pf,Rd} = 0.6 \cdot \pi \cdot d_m \cdot t_f \cdot f_{tk} / \gamma_{M2} =$ 311243.9 N

Bull.	$F_{f,Rd}$ [N]	$F_{t,Rd}$ [N]
1	88252.1	88252.1
2	88252.1	88252.1
3	93638.2	90333.1
4	93638.2	90333.1
5	93638.2	90333.1
6	93638.2	90333.1
7	88252.1	88252.1
8	88252.1	88252.1

Legenda

$F_{f,Rd} = M_{res,m} / (B_m \cdot R_m)$ resistenza a flessione flangia

$F_{t,Rd} = \min [F_{tb,Rd} , B_{pf,Rd} , F_{f,Rd}]$ resistenza a trazione di progetto

Resistenza a taglio dei bulloni $F_{vb,Rd} = 0.6 \cdot f_{tb} \cdot A_{res} / \gamma_{M2} =$ 60222.1 N

Bull.	$F_{bf,x,Rd}$ [N]	$F_{v,x,Rd}$ [N]	$F_{bf,y,Rd}$ [N]	$F_{v,y,Rd}$ [N]
1	275200.0	60222.1	275200.0	60222.1
2	275200.0	60222.1	275200.0	60222.1
3	133013.3	60222.1	151910.4	60222.1
4	133013.3	60222.1	151910.4	60222.1
5	133013.3	60222.1	151910.4	60222.1
6	133013.3	60222.1	151910.4	60222.1
7	275200.0	60222.1	275200.0	60222.1
8	275200.0	60222.1	275200.0	60222.1

Legenda

$F_{bf,x,Rd} = k \cdot \alpha \cdot f_{tk} \cdot \varnothing \cdot t_f / \gamma_{M2}$ resistenza a rifollamento flangia in direzione x

$F_{v,x,Rd} = \min [F_{vb,Rd} , F_{bf,x,Rd}]$ resistenza a taglio di progetto in direzione x

$F_{bf,y,Rd} = k \cdot \alpha \cdot f_{tk} \cdot \varnothing \cdot t_f / \gamma_{M2}$ resistenza a rifollamento flangia in direzione y

$F_{v,y,Rd} = \min [F_{vb,Rd} , F_{bf,y,Rd}]$ resistenza a taglio di progetto in direzione y

Viale Duca Alessandro n. 11 – 43123 Parma
Cell. 335 1403156 – E mail ing.concari@gmail.com
Sito web: studioaire.it – P.IVA 02561480340

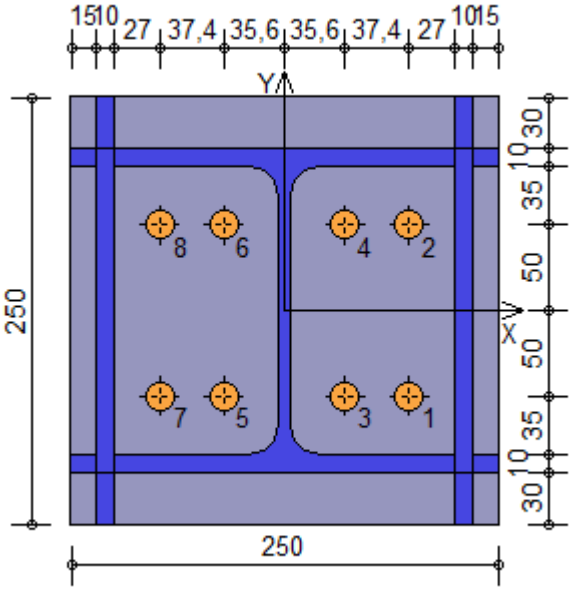

Verifiche sui bulloni

1-Taglio e trazione (Nodo n. 18, CMB n. 79)

Bull.	X [mm]	Y [mm]	$F_{v,Ed}$ [N]	$F_{v,Rd}$ [N]	$F_{t,Ed}$ [N]	$F_{t,Rd}$ [N]	FV_1	VER
1	73.00	-50.00	1820.9	60222.1	8450.6	88252.1	0.098633	Ok
2	73.00	50.00	1814.3	60222.1	0.0	88252.1	0.030127	Ok
3	35.60	-50.00	1818.5	60222.1	20002.8	90333.1	0.188363	Ok
4	35.60	50.00	1811.9	60222.1	0.0	90333.1	0.030087	Ok
5	-35.60	-50.00	1813.9	60222.1	41995.0	90333.1	0.362185	Ok
6	-35.60	50.00	1807.3	60222.1	10845.9	90333.1	0.115772	Ok
7	-73.00	-50.00	1811.5	60222.1	53547.1	88252.1	0.463475	Ok
8	-73.00	50.00	1804.9	60222.1	22398.0	88252.1	0.211254	Ok

2-Trazione (Nodo n. 18, CMB n. 79)

Bull.	X [mm]	Y [mm]	$F_{t,Ed}$ [N]	$F_{t,Rd}$ [N]	FV_2	VER
1	73.00	-50.00	8450.6	88252.1	0.095756	Ok
2	73.00	50.00	0.0	88252.1	0.000000	Ok
3	35.60	-50.00	20002.8	90333.1	0.221433	Ok
4	35.60	50.00	0.0	90333.1	0.000000	Ok
5	-35.60	-50.00	41995.0	90333.1	0.464891	Ok
6	-35.60	50.00	10845.9	90333.1	0.120066	Ok
7	-73.00	-50.00	53547.1	88252.1	0.606752	Ok
8	-73.00	50.00	22398.0	88252.1	0.253796	Ok

Legenda

$F_{v,Ed}$ forza di taglio agente sul bullone
$F_{v,Rd}$ resistenza a taglio di progetto del bullone
$F_{t,Ed}$ forza di trazione agente sul bullone
$F_{t,Rd}$ resistenza a trazione di progetto del bullone
$FV_1 = F_{v,Ed} / F_{v,Rd} + F_{t,Ed} / (1.4 \cdot F_{t,Rd})$
$FV_2 = F_{t,Ed} / F_{t,Rd}$
VER $\rightarrow$ $FV_i \leq 1$

Verifiche sulle saldature profilo-flangia (versione beta)

Si considera la sezione di gola (avente altezza $a = s_c / 2^{0.5} = 7.071$) in posizione ribaltata: vengono considerate positive le tensioni normali di trazione e le tensioni tangenziali agenti verso destra e verso il basso. Tutte le tensioni sono espresse in N/mm^2.

Verifica formula (4.2.84) (Nodo n. 18, CMB n. 79)

Cordoni	Lung.[mm]	$n_\perp$	$t_\perp$	$\tau_\parallel$	FV_1	VER_1
Nerv. verticale lato destro esterno	250.0	-53.10	0.00	-1.24	53.11	Ok
Nerv. vert. lato destro interno zona inferiore	20.0	7.60	0.00	-1.24	7.71	Ok
Nerv. vert. lato sinistro interno zona inferiore	20.0	47.07	0.00	-1.24	47.09	Ok
Nerv. verticale lato sinistro esterno	250.0	50.56	0.00	-1.24	50.58	Ok
Nerv. orizz. inferiore lato destro esterno	5.0	-4.29	0.00	1.95	4.71	Ok
Ala inferiore esterno	200.0	41.74	0.00	1.95	41.78	Ok
Nerv. orizz. inferiore lato sinistro esterno	5.0	46.85	0.00	1.95	46.89	Ok
Nerv. orizz. inferiore lato destro interno	5.0	-8.19	0.00	1.95	8.42	Ok
Ala inferiore interno lato destro	78.8	13.03	0.00	1.95	13.17	Ok
Ala inferiore interno lato sinistro	78.8	37.83	0.00	1.95	37.88	Ok
Nerv. orizz. inferiore lato sinistro interno	5.0	42.95	0.00	1.95	42.99	Ok
Nerv. vert. lato destro interno zona centrale	150.0	-38.16	0.00	-1.24	38.18	Ok
Anima lato destro	134.0	-16.60	0.00	-1.24	16.64	Ok
Anima lato sinistro	134.0	-16.60	0.00	-1.24	16.64	Ok
Nerv. vert. lato sinistro interno zona centrale	150.0	35.63	0.00	-1.24	35.65	Ok
Nerv. orizz. superiore lato destro interno	5.0	-45.48	0.00	1.95	45.52	Ok
Ala superiore interno lato destro	78.8	-40.36	0.00	1.95	40.41	Ok
Ala superiore interno lato sinistro	78.8	-15.56	0.00	1.95	15.68	Ok
Nerv. orizz. superiore lato sinistro interno	5.0	5.66	0.00	1.95	5.99	Ok
Nerv. orizz. superiore lato destro esterno	5.0	-49.38	0.00	1.95	49.42	Ok
Ala superiore esterno	200.0	-23.81	0.00	1.95	23.89	Ok
Nerv. orizz. superiore lato sinistro esterno	5.0	1.76	0.00	1.95	2.62	Ok
Nerv. vert. lato destro interno zona superiore	20.0	-49.60	0.00	-1.24	49.62	Ok
Nerv. vert. lato sinistro interno zona superiore	20.0	-10.14	0.00	-1.24	10.21	Ok

Viale Duca Alessandro n. 11 – 43123 Parma
Cell. 335 1403156 – E mail ing.concari@gmail.com
Sito web: studioaire.it – P.IVA 02561480340

Verifica formula (4.2.85) (Nodo n. 18, CMB n. 79)

Cordoni	Lung.[mm]	$n_\perp$	$t_\perp$	$\tau_\parallel$	FV_2	VER_2
Nerv. verticale lato destro esterno	250.0	-53.10	0.00	-1.24	53.10	Ok
Nerv. vert. lato destro interno zona inferiore	20.0	7.60	0.00	-1.24	7.60	Ok
Nerv. vert. lato sinistro interno zona inferiore	20.0	47.07	0.00	-1.24	47.07	Ok
Nerv. verticale lato sinistro esterno	250.0	50.56	0.00	-1.24	50.56	Ok
Nerv. orizz. inferiore lato destro esterno	5.0	-4.29	0.00	1.95	4.29	Ok
Ala inferiore esterno	200.0	41.74	0.00	1.95	41.74	Ok
Nerv. orizz. inferiore lato sinistro esterno	5.0	46.85	0.00	1.95	46.85	Ok
Nerv. orizz. inferiore lato destro interno	5.0	-8.19	0.00	1.95	8.19	Ok
Ala inferiore interno lato destro	78.8	13.03	0.00	1.95	13.03	Ok
Ala inferiore interno lato sinistro	78.8	37.83	0.00	1.95	37.83	Ok
Nerv. orizz. inferiore lato sinistro interno	5.0	42.95	0.00	1.95	42.95	Ok
Nerv. vert. lato destro interno zona centrale	150.0	-38.16	0.00	-1.24	38.16	Ok
Anima lato destro	134.0	-16.60	0.00	-1.24	16.60	Ok
Anima lato sinistro	134.0	-16.60	0.00	-1.24	16.60	Ok
Nerv. vert. lato sinistro interno zona centrale	150.0	35.63	0.00	-1.24	35.63	Ok
Nerv. orizz. superiore lato destro interno	5.0	-45.48	0.00	1.95	45.48	Ok
Ala superiore interno lato destro	78.8	-40.36	0.00	1.95	40.36	Ok
Ala superiore interno lato sinistro	78.8	-15.56	0.00	1.95	15.56	Ok
Nerv. orizz. superiore lato sinistro interno	5.0	5.66	0.00	1.95	5.66	Ok
Nerv. orizz. superiore lato destro esterno	5.0	-49.38	0.00	1.95	49.38	Ok
Ala superiore esterno	200.0	-23.81	0.00	1.95	23.81	Ok
Nerv. orizz. superiore lato sinistro esterno	5.0	1.76	0.00	1.95	1.76	Ok
Nerv. vert. lato destro interno zona superiore	20.0	-49.60	0.00	-1.24	49.60	Ok
Nerv. vert. lato sinistro interno zona superiore	20.0	-10.14	0.00	-1.24	10.14	Ok

Legenda

$n_\perp$ tensione normale perpendicolare all'asse del cordone
$t_\perp$ tensione tangenziale perpendicolare all'asse del cordone
$\tau_\parallel$ tensione tangenziale parallela all'asse del cordone
$FV_1 = (n_\perp^2 + t_\perp^2 + \tau_\parallel^2)^{0.5}$
$FV_2 = |n_\perp| + |t_\perp|$
$VER_i \rightarrow FV_i \leq \beta_i \cdot f_{yk}$ ($\beta_1 \cdot f_{yk} = 192.50$ N/mm^2 $\beta_2 \cdot f_{yk} = 233.75$ N/mm^2)

Verifiche a flessione piastra in zona compressa

Sezione parallela a X a filo della colonna (Nodo n. 18, CMB n. 67)

Pressione media a bordo piastra p_{med} = 13,66 N/mm^2
Carico lineare sbalzo q_{lin} = 3414,68 N/mm
Lunghezza sbalzo L_s = 30,0 mm
Modulo di resistenza minimo W_{min} = 169028,3 mm^3
Momento resistente $M_{p,Rd}$ = 44269330,0 N mm
Momento massimo $M_{p,Ed}$ = 1536604,0 N mm
$M_{p,Ed} / M_{p,Rd}$ = 0,034710 Ok

Sezione parallela a Y a filo della nervatura verticale (Nodo n. 18, CMB n. 79)

Pressione media a bordo piastra p_{med} = 13,20 N/mm^2
Carico lineare sbalzo q_{lin} = 3300,96 N/mm
Lunghezza sbalzo L_s = 15,0 mm
Modulo di resistenza minimo W_{min} = 169028,3 mm^3
Momento resistente $M_{p,Rd}$ = 44269330,0 N mm
Momento massimo $M_{p,Ed}$ = 371357,9 N mm
$M_{p,Ed} / M_{p,Rd}$ = 0,008389 Ok

Verifica del momento di progetto del giunto (Nodo n. 18, CMB n. 79)

Momento resistente del giunto $M_{j,Rd}$ = 46004250.0 N mm
Momento di progetto $M_{j,Ed}$ = 19150000.0 N mm
$M_{j,Ed} / M_{j,Rd}$ = 0.416266 Ok

Ancoraggio

Tirafondi con uncini e bolzoni

Lunghezza tirafondi L_t = 339 mm (rettilineo 124 mm, arco 151 mm, terminale 64 mm)
Lunghezza di aderenza L_a = 444 mm (si considera l'uncino equivalente ad un tratto rettilineo lungo 20Ø)
Diametro bolzoni $Ø_b$ = 15 mm

Lunghezza minima tirafondi: 20 diametri (320 mm)

Calcestruzzo

Resistenza cubica caratteristica a compressione R_{ck} = 30.00 N/mm^2
Resistenza cilindrica caratteristica a compressione $f_{ck} = 0.83 \cdot R_{ck}$ = 24.90 N/mm^2
Resistenza di calcolo a compressione $f_{cd} = \alpha_{cc} \cdot f_{ck} / \gamma_C$ = 14.11 N/mm^2
Resistenza caratteristica a trazione $f_{ctk} = 0.7 \cdot 0.30 \cdot f_{ck}^{2/3}$ = 1.79 N/mm^2
Resistenza tangenziale di aderenza di calcolo $f_{bd} = 2.25 \cdot \eta_1 \cdot \eta_2 \cdot f_{ctk} / \gamma_C$ = 2.69 N/mm^2

Compressione massima calcestruzzo (Nodo n. 18, CMB n. 79)

p_{max} = 13.41 N/mm^2 < f_{cd} Ok

Verifica ancoraggio

Si considera la massima sollecitazione di trazione agente nei tirafondi (Nodo n. 18, CMB n. 79)

Trazione di progetto dell'ancoraggio $F_{t,an,Ed} = \max [F_{t,Ed}]$ = 53547.1 N
Resistenza a trazione per aderenza $F_{t,ad,Rd} = L_a \cdot \pi \cdot Ø \cdot f_{bd}$ = 59946.4 N
$F_{t,ad,Rd} > F_{t,an,Ed}$ Ok

NODO 3: collegamento pilastri-pilastri

Coefficienti di sicurezza utilizzati

γ_{M0} = 1.05
γ_{M1} = 1.10
γ_{M2} = 1.25

Colonna

Tipo di profilo: HEA 200
Materiale: Acciaio S275 f_y = 275 N/mm^2 f_t = 430 N/mm^2 γ_{ov} = 1.25
Classe sezione: 1

Viale Duca Alessandro n. 11 – 43123 Parma
Cell. 335 1403156 – E mail ing.concari@gmail.com
Sito web: studioaire.it – P.IVA 02561480340

Flangia:
Materiale: Acciaio S275 f_y = 275 N/mm^2 f_t = 430 N/mm^2 γ_{ov} = 1.25
Dimensioni (B x H x Sp): 200.0 x 190.0 x 20.0 mm

Bullonature:
Viti cl. 8.8 Dadi 8 o 10 (f_{yb} = 640 N/mm^2, f_{tb} = 800 N/mm^2)
Diametro gambo Ø = 16 mm A_{res} = 156.8 mm^2 (ridotta per filettatura)
Diametro dado/testa d_m = 24 mm
Diametro foro $Ø_0$ = 17 mm

Rigidezza giunto (calcolata secondo EN 1993-1-8 : 2005 par. 6.3):
$S_{j,ini}$ = 17304290000 N mm / rad

Saldature:
Materiale: Acciaio S275 f_y = 275 N/mm^2 f_t = 430 N/mm^2 β_1 = 0.70 β_2 = 0.85
Spessore cordoni d'angolo s_c = 8 mm

Sollecitazioni:

Nodo.CMB	V2 [N]	V3 [N]	N [N]	M2 [N mm]	M3 [N mm]	T [N mm]
3.1	-2342.9	-92.1	-4045.2	151994.0	6476000.0	79.0
3.2	-2667.4	-9.1	-4249.0	16272.0	6816000.0	100.0
3.3	-3918.9	-112.3	-4056.7	184996.0	11330000.0	198.0
3.4	-4243.4	-29.3	-4260.5	49273.0	11670000.0	218.0
3.5	-1802.2	-70.8	-3111.7	116918.0	4982000.0	61.0
3.6	-2126.7	12.1	-3315.5	-18804.0	5322000.0	81.0
3.7	-3378.2	-91.0	-3123.2	149920.0	9833000.0	180.0
3.8	-3702.8	-8.1	-3327.0	14198.0	10170000.0	200.0
3.9	-3446.1	-106.2	-4053.2	175095.0	9872000.0	162.0
3.10	-3770.6	-23.3	-4257.1	39373.0	10210000.0	183.0
3.11	-2905.4	-85.0	-3119.7	140020.0	8378000.0	144.0
3.12	-3230.0	-2.0	-3323.6	4297.0	8718000.0	164.0
3.13	-2394.7	822.6	-2734.0	-1234000.0	6573000.0	-3190.0
3.14	-2719.3	905.5	-2937.9	-1370000.0	6913000.0	-3170.0
3.15	-3970.8	802.4	-2745.5	-1201000.0	11420000.0	-3072.0
3.16	-4295.3	885.3	-2949.4	-1337000.0	11770000.0	-3051.0
3.17	-1854.1	843.8	-1800.5	-1269000.0	5079000.0	-3208.0
3.18	-2178.6	926.8	-2004.4	-1405000.0	5419000.0	-3188.0
3.19	-3430.1	823.6	-1812.0	-1236000.0	9930000.0	-3090.0
3.20	-3754.7	906.6	-2015.9	-1372000.0	10270000.0	-3069.0
3.21	-2429.3	1432.3	-1860.0	-2158000.0	6638000.0	-5370.0
3.22	-2753.9	1515.3	-2063.8	-2294000.0	6978000.0	-5349.0
3.23	-3532.6	1418.2	-1868.0	-2135000.0	10030000.0	-5287.0
3.24	-3857.1	1501.1	-2071.9	-2271000.0	10370000.0	-5266.0
3.25	-1888.7	1453.6	-926.5	-2193000.0	5143000.0	-5388.0
3.26	-2213.2	1536.5	-1130.3	-2329000.0	5484000.0	-5368.0
3.27	-2991.9	1439.4	-934.5	-2170000.0	8539000.0	-5305.0
3.28	-3316.5	1522.4	-1138.4	-2306000.0	8880000.0	-5285.0
3.29	-3498.0	808.4	-2742.1	-1211000.0	9969000.0	-3107.0
3.30	-3822.5	891.4	-2945.9	-1347000.0	10310000.0	-3087.0
3.31	-2957.3	829.7	-1808.6	-1246000.0	8475000.0	-3125.0
3.32	-3281.9	912.6	-2012.4	-1382000.0	8815000.0	-3105.0
3.33	-2284.0	-1128.7	-5531.1	1723000.0	6366000.0	3784.0
3.34	-2608.6	-1045.7	-5735.0	1587000.0	6706000.0	3805.0
3.35	-3860.1	-1148.9	-5542.6	1756000.0	11220000.0	3903.0
3.36	-4184.6	-1065.9	-5746.4	1620000.0	11560000.0	3923.0
3.37	-1743.4	-1107.4	-4597.6	1688000.0	4872000.0	3766.0
3.38	-2067.9	-1024.5	-4801.5	1552000.0	5212000.0	3787.0
3.39	-3319.4	-1127.6	-4609.1	1721000.0	9723000.0	3885.0
3.40	-3643.9	-1044.7	-4812.9	1585000.0	10060000.0	3905.0
3.41	-3387.3	-1142.8	-5539.1	1746000.0	9762000.0	3867.0
3.42	-3711.8	-1059.9	-5743.0	1610000.0	10100000.0	3888.0
3.43	-2846.6	-1121.6	-4605.6	1711000.0	8268000.0	3849.0
3.44	-3171.1	-1038.6	-4809.5	1575000.0	8608000.0	3870.0
3.45	-2244.8	-1819.7	-6521.7	2770000.0	6293000.0	6255.0
3.46	-2569.4	-1736.8	-6725.6	2635000.0	6633000.0	6275.0
3.47	-3348.0	-1833.9	-6529.8	2794000.0	9689000.0	6338.0
3.48	-3672.6	-1750.9	-6733.6	2658000.0	10030000.0	6358.0
3.49	-1704.2	-1798.5	-5588.2	2735000.0	4798000.0	6236.0
3.50	-2028.7	-1715.5	-5792.1	2600000.0	5139000.0	6257.0
3.51	-2807.4	-1812.6	-5596.3	2758000.0	8195000.0	6319.0
3.52	-3131.9	-1729.7	-5800.1	2623000.0	8535000.0	6340.0
3.53	-1675.5	-357.2	-1421.6	621896.0	7511000.0	716.0
3.54	-1867.9	-882.6	-2456.8	1236000.0	7857000.0	4407.0
3.55	-3343.5	813.3	-3993.2	-1121000.0	6351000.0	-4168.0
3.56	-3535.9	287.9	-5028.3	-506428.0	6697000.0	-478.0
3.57	-1688.9	-154.6	-1288.9	315151.0	7411000.0	101.0
3.58	-1854.4	-1085.3	-2589.5	1543000.0	7956000.0	5022.0
3.59	-3356.9	1015.9	-3860.5	-1427000.0	6251000.0	-4784.0
3.60	-3522.5	85.2	-5161.1	-199683.0	6797000.0	138.0
3.61	-1624.9	-10.7	-1417.8	102807.0	7460000.0	-731.0
3.62	-1817.3	-536.1	-2453.0	716979.0	7806000.0	2960.0
3.63	-3394.1	466.8	-3997.0	-601511.0	6402000.0	-2721.0
3.64	-3586.5	-58.6	-5032.2	12661.0	6748000.0	969.0
3.65	-1638.3	191.9	-1285.1	-203938.0	7360000.0	-1346.0
3.66	-1803.9	-738.8	-2585.7	1024000.0	7905000.0	3575.0
3.67	-3407.5	669.4	-3864.3	-908255.9	6302000.0	-3337.0
3.68	-3573.0	-261.3	-5164.9	319406.0	6848000.0	1585.0
3.69	-2034.8	665.4	-1114.0	-704511.0	6701000.0	-5299.0
3.70	-2676.2	-1085.9	-4564.5	1343000.0	7854000.0	7002.0
3.71	-2535.2	1016.6	-1885.5	-1227000.0	6353000.0	-6764.0
3.72	-3176.6	-734.8	-5336.0	819979.0	7506000.0	5537.0
3.73	-2019.7	769.4	-1112.8	-860238.0	6686000.0	-5733.0
3.74	-2661.0	-982.0	-4563.4	1187000.0	7839000.0	6568.0
3.75	-2550.4	912.6	-1886.6	-1072000.0	6369000.0	-6330.0
3.76	-3191.7	-838.7	-5337.1	975705.9	7522000.0	5971.0
3.77	-2079.5	1340.9	-671.6	-1727000.0	6369000.0	-7351.0
3.78	-2631.4	-1761.4	-5006.9	2365000.0	8187000.0	9054.0

Viale Duca Alessandro n. 11 – 43123 Parma
Cell. 335 1403156 – E mail ing.concari@gmail.com
Sito web: studioaire.it – P.IVA 02561480340

3.79	-2580.0	1692.1	-1443.0	-2250000.0	6021000.0	-8816.0
3.80	-3131.9	-1410.3	-5778.4	1842000.0	7839000.0	7589.0
3.81	-2064.4	1444.9	-670.4	-1883000.0	6353000.0	-7785.0
3.82	-2616.3	-1657.5	-5005.8	2209000.0	8172000.0	8620.0
3.83	-2595.1	1588.1	-1444.2	-2094000.0	6036000.0	-8382.0
3.84	-3147.0	-1514.2	-5779.5	1998000.0	7854000.0	8023.0

Calcolo resistenze

Resistenza a trazione dei bulloni $F_{tb,Rd} = 0.9 \cdot f_{tb} \cdot A_{res} / \gamma_{M2} =$ 90333.1 N

Resistenza a punzonamento flangia $B_{pf,Rd} = 0.6 \cdot \pi \cdot d_m \cdot t_f \cdot f_{tk} / \gamma_{M2} =$ 311243.9 N

Bull.	$F_{f,Rd}$ [N]	$F_{t,Rd}$ [N]
1	75454.3	75454.3
2	30075.2	30075.2
3	75454.3	75454.3
4	75454.3	75454.3
5	30075.2	30075.2
6	75454.3	75454.3

Legenda

$F_{f,Rd} = M_{res,m} / (B_m \cdot R_m)$ resistenza a flessione flangia

$F_{t,Rd} = \min [F_{tb,Rd} , B_{pf,Rd} , F_{f,Rd}]$ resistenza a trazione di progetto

Resistenza a taglio dei bulloni $F_{vb,Rd} = 0.6 \cdot f_{tb} \cdot A_{res} / \gamma_{M2} =$ 60222.1 N

Bull.	$F_{bf,x,Rd}$ [N]	$F_{v,x,Rd}$ [N]	$F_{bf,y,Rd}$ [N]	$F_{v,y,Rd}$ [N]
1	240125.5	60222.1	188862.8	60222.1
2	240125.5	60222.1	254964.7	60222.1
3	240125.5	60222.1	188862.8	60222.1
4	240125.5	60222.1	188862.8	60222.1
5	240125.5	60222.1	254964.7	60222.1
6	240125.5	60222.1	188862.8	60222.1

Legenda

$F_{bf,x,Rd} = k \cdot \alpha \cdot f_{tk} \cdot \varnothing \cdot t_f / \gamma_{M2}$ resistenza a rifollamento flangia in direzione x

$F_{v,x,Rd} = \min [F_{vb,Rd} , F_{bf,x,Rd}]$ resistenza a taglio di progetto in direzione x

$F_{bf,y,Rd} = k \cdot \alpha \cdot f_{tk} \cdot \varnothing \cdot t_f / \gamma_{M2}$ resistenza a rifollamento flangia in direzione y

$F_{v,y,Rd} = \min [F_{vb,Rd} , F_{bf,y,Rd}]$ resistenza a taglio di progetto in direzione y

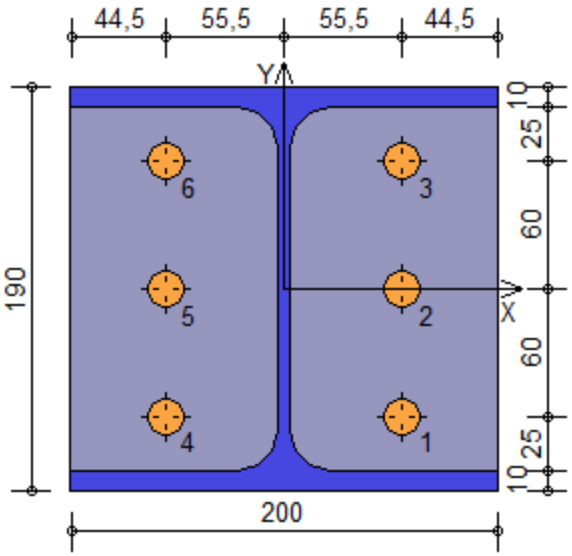

Verifiche sui bulloni

1-Taglio e trazione (Nodo n. 3, CMB n. 16)

Bull.	X [mm]	Y [mm]	$F_{v,Ed}$ [N]	$F_{v,Rd}$ [N]	$F_{t,Ed}$ [N]	$F_{t,Rd}$ [N]	FV_1	VER
1	55.50	-60.00	724.8	60222.1	29055.5	75454.3	0.287088	Ok
2	55.50	0.00	725.9	60222.1	15295.3	30075.2	0.375316	Ok
3	55.50	60.00	727.0	60222.1	1535.1	75454.3	0.026605	Ok
4	-55.50	-60.00	734.9	60222.1	30214.2	75454.3	0.298225	Ok
5	-55.50	0.00	736.0	60222.1	16454.1	30075.2	0.403005	Ok
6	-55.50	60.00	737.1	60222.1	2693.9	75454.3	0.037742	Ok

2-Trazione (Nodo n. 3, CMB n. 16)

Bull.	X [mm]	Y [mm]	$F_{t,Ed}$ [N]	$F_{t,Rd}$ [N]	FV_2	VER
1	55.50	-60.00	29055.5	75454.3	0.385074	Ok
2	55.50	0.00	15295.3	30075.2	0.508568	Ok
3	55.50	60.00	1535.1	75454.3	0.020345	Ok
4	-55.50	-60.00	30214.2	75454.3	0.400431	Ok
5	-55.50	0.00	16454.1	30075.2	0.547098	Ok
6	-55.50	60.00	2693.9	75454.3	0.035702	Ok

Legenda

$F_{v,Ed}$ forza di taglio agente sul bullone

$F_{v,Rd}$ resistenza a taglio di progetto del bullone

$F_{t,Ed}$ forza di trazione agente sul bullone

$F_{t,Rd}$ resistenza a trazione di progetto del bullone

$FV_1 = F_{v,Ed} / F_{v,Rd} + F_{t,Ed} / (1.4 \cdot F_{t,Rd})$

$FV_2 = F_{t,Ed} / F_{t,Rd}$

Viale Duca Alessandro n. 11 – 43123 Parma
Cell. 335 1403156 – E mail ing.concari@gmail.com
Sito web: studioaire.it – P.IVA 02561480340

VER → $FV_i \leq 1$

Verifiche sulle saldature profilo-flangia (versione beta)
Si considera la sezione di gola (avente altezza $a = s_c / 2^{0.5} = 5.657$) in posizione ribaltata: vengono considerate positive le tensioni normali di trazione e le tensioni tangenziali agenti verso destra e verso il basso. Tutte le tensioni sono espresse in N/mm^2.

Verifica formula (4.2.84) (Nodo n. 3, CMB n. 48)

Cordoni	Lung.[mm]	$n_\perp$	$t_\perp$	$\tau_\parallel$	FV_1	VER_1
Ala inferiore interno lato destro	78.8	91.16	0.00	-0.98	91.16	Ok
Ala inferiore interno lato sinistro	78.8	48.01	0.00	-0.98	48.02	Ok
Anima lato destro	134.0	-49.02	0.00	-2.42	49.08	Ok
Anima lato sinistro	134.0	-49.02	0.00	-2.42	49.08	Ok
Ala superiore interno lato destro	78.8	-52.10	0.00	-0.98	52.10	Ok
Ala superiore interno lato sinistro	78.8	-95.24	0.00	-0.98	95.24	Ok

Verifica formula (4.2.85) (Nodo n. 3, CMB n. 48)

Cordoni	Lung.[mm]	$n_\perp$	$t_\perp$	$\tau_\parallel$	FV_2	VER_2
Ala inferiore interno lato destro	78.8	91.16	0.00	-0.98	91.16	Ok
Ala inferiore interno lato sinistro	78.8	48.01	0.00	-0.98	48.01	Ok
Anima lato destro	134.0	-49.02	0.00	-2.42	49.02	Ok
Anima lato sinistro	134.0	-49.02	0.00	-2.42	49.02	Ok
Ala superiore interno lato destro	78.8	-52.10	0.00	-0.98	52.10	Ok
Ala superiore interno lato sinistro	78.8	-95.24	0.00	-0.98	95.24	Ok

Legenda
$n_\perp$ tensione normale perpendicolare all'asse del cordone
$t_\perp$ tensione tangenziale perpendicolare all'asse del cordone
$\tau_\parallel$ tensione tangenziale parallela all'asse del cordone
$FV_1 = (n_\perp^2 + t_\perp^2 + \tau_\parallel^2)^{0.5}$
$FV_2 = |n_\perp| + |t_\perp|$
VER_i → $FV_i \leq \beta_i \cdot f_{yk}$ ($\beta_1 \cdot f_{yk} = 192.50$ N/mm^2 $\beta_2 \cdot f_{yk} = 233.75$ N/mm^2)

Verifica del momento di progetto del giunto (Nodo n. 3, CMB n. 16)
Momento resistente del giunto $M_{j,Rd}$ = 31212430.0 N mm
Momento di progetto $M_{j,Ed}$ = 11515670.0 N mm
$M_{j,Ed} / M_{j,Rd}$ = 0.368945 Ok

NODO 3: collegamento pilastri-travi (frontali)

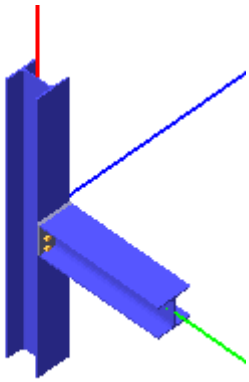

Colonna
Tipo di profilo: HEA 200
Materiale: Acciaio S275 $f_y = 275$ N/mm^2 $f_t = 430$ N/mm^2 $\gamma_{ov} = 1.25$
Classe sezione: 1

Coefficienti di sicurezza utilizzati
$\gamma_{M0} = 1.05$
$\gamma_{M1} = 1.10$
$\gamma_{M2} = 1.25$

Trave lato 2+
Tipo di profilo: HEA 200
Materiale: Acciaio S275 $f_y = 275$ N/mm^2 $f_t = 430$ N/mm^2 $\gamma_{ov} = 1.25$
Classe sezione: 1

Flangia:
Materiale: Acciaio S275 $f_y = 275$ N/mm^2 $f_t = 430$ N/mm^2 $\gamma_{ov} = 1.25$
Dimensioni (B x H x Sp): 200.0 x 190.0 x 20.0 mm

Bullonature:
Viti cl. 8.8 Dadi 8 o 10 ($f_{yb} = 640$ N/mm^2, $f_{tb} = 800$ N/mm^2)
Diametro gambo Ø = 16 mm $A_{res} = 156.8$ mm^2 (ridotta per filettatura)
Diametro dado/testa $d_m = 24$ mm
Diametro foro $Ø_0 = 17$ mm

Rigidezza giunto (calcolata secondo EN 1993-1-8 : 2005 par. 6.3):
$S_{j,ini} = 3875925000$ N mm / rad

Saldature:
Materiale: Acciaio S275 $f_y = 275$ N/mm^2 $f_t = 430$ N/mm^2 $\beta_1 = 0.70$ $\beta_2 = 0.85$
Spessore cordoni d'angolo $s_c = 8$ mm
Sollecitazioni nella sezione d'attacco dell'elemento:

Viale Duca Alessandro n. 11 – 43123 Parma
Cell. 335 1403156 – E mail ing.concari@gmail.com
Sito web: studioaire.it – P.IVA 02561480340

Nodo.CMB	V2 [N]	V3 [N]	N [N]	M2 [N mm]	M3 [N mm]	T [N mm]
3.1	21614.4	0.1	-297.3	145.0	-11846630.0	95.0
3.2	22320.1	-0.5	-605.1	-602.0	-13549590.0	-19.0
3.3	39190.5	0.1	-645.8	339.0	-20986900.0	84.0
3.4	39896.1	-0.4	-953.6	-407.0	-22689870.0	-31.0
3.5	16626.5	0.1	-228.7	111.0	-9120483.0	73.0
3.6	17332.1	-0.5	-536.5	-635.0	-10813450.0	-41.0
3.7	34202.6	0.1	-577.2	306.0	-18260750.0	62.0
3.8	34908.2	-0.5	-885.0	-441.0	-19953720.0	-53.0
3.9	33917.7	0.1	-541.2	281.0	-18247820.0	87.0
3.10	34623.3	-0.5	-849.0	-466.0	-19950790.0	-27.0
3.11	28929.7	0.1	-472.6	248.0	-15511680.0	65.0
3.12	29635.3	-0.5	-780.4	-499.0	-17214650.0	-49.0
3.13	21644.2	6776.3	-1213.1	-4112000.0	-11923800.0	571.0
3.14	22349.9	6775.7	-1520.9	-4113000.0	-13616760.0	457.0
3.15	39220.3	6776.3	-1561.6	-4112000.0	-21064070.0	560.0
3.16	39925.9	6775.8	-1869.4	-4113000.0	-22757040.0	446.0
3.17	16656.3	6776.3	-1144.5	-4112000.0	-9187652.0	549.0
3.18	17361.9	6775.7	-1452.3	-4113000.0	-10880620.0	435.0
3.19	34232.3	6776.3	-1493.0	-4112000.0	-18327930.0	538.0
3.20	34938.0	6775.8	-1800.8	-4113000.0	-20020890.0	424.0
3.21	21664.1	11293.8	-1823.6	-6854000.0	-11971910.0	889.0
3.22	22369.7	11293.2	-2131.4	-6855000.0	-13664880.0	775.0
3.23	33967.3	11293.8	-2067.6	-6854000.0	-18363110.0	881.0
3.24	34673.0	11293.2	-2375.4	-6855000.0	-20066070.0	767.0
3.25	16676.2	11293.8	-1755.0	-6854000.0	-9235761.0	867.0
3.26	17381.8	11293.2	-2062.8	-6855000.0	-10928730.0	753.0
3.27	28979.4	11293.8	-1999.0	-6854000.0	-15636960.0	859.0
3.28	29685.0	11293.2	-2306.8	-6855000.0	-17329920.0	745.0
3.29	33947.5	6776.3	-1457.0	-4112000.0	-18324990.0	563.0
3.30	34653.1	6775.8	-1764.8	-4113000.0	-20017950.0	449.0
3.31	28959.5	6776.3	-1388.4	-4112000.0	-15588850.0	541.0
3.32	29665.1	6775.8	-1696.2	-4113000.0	-17281820.0	427.0
3.33	21580.7	-7679.7	740.6	4661000.0	-11769830.0	-445.0
3.34	22286.3	-7680.2	432.8	4660000.0	-13462800.0	-559.0
3.35	39156.7	-7679.6	392.1	4661000.0	-20910110.0	-456.0
3.36	39862.3	-7680.2	84.3	4660000.0	-22603080.0	-571.0
3.37	16592.7	-7679.7	809.2	4661000.0	-9033694.0	-467.0
3.38	17298.3	-7680.2	501.4	4660000.0	-10736660.0	-581.0
3.39	34168.8	-7679.6	460.7	4661000.0	-18173960.0	-478.0
3.40	34874.4	-7680.2	152.9	4660000.0	-19876930.0	-592.0
3.41	33883.9	-7679.6	496.7	4661000.0	-18171030.0	-453.0
3.42	34589.5	-7680.2	188.9	4660000.0	-19864000.0	-567.0
3.43	28896.0	-7679.6	565.3	4661000.0	-15434880.0	-475.0
3.44	29601.6	-7680.2	257.5	4660000.0	-17127850.0	-589.0
3.45	21558.2	-12799.5	1432.6	7768000.0	-11711970.0	-805.0
3.46	22263.8	-12800.0	1124.7	7767000.0	-13414940.0	-919.0
3.47	33861.4	-12799.4	1188.6	7768000.0	-18113170.0	-813.0
3.48	34567.0	-12800.0	880.8	7768000.0	-19816130.0	-927.0
3.49	16570.2	-12799.5	1501.2	7768000.0	-8985831.0	-827.0
3.50	17275.8	-12800.1	1193.4	7767000.0	-10678800.0	-941.0
3.51	28873.5	-12799.4	1257.2	7768000.0	-15377020.0	-835.0
3.52	29579.1	-12800.0	949.4	7768000.0	-17079990.0	-949.0
3.53	20592.4	790.5	2132.6	-733638.0	-5416722.0	-1523.0
3.54	20753.3	-2502.8	2871.7	2335000.0	-5769437.0	-2018.0
3.55	27313.2	2502.4	-3936.2	-2336000.0	-21585250.0	2033.0
3.56	27474.1	-790.9	-3197.0	733220.0	-21939960.0	1538.0
3.57	21332.9	477.4	2004.6	-440755.0	-7184374.0	-894.0
3.58	20012.7	-2189.8	2999.7	2042000.0	-4001793.0	-2646.0
3.59	28053.8	2189.3	-4064.2	-2043000.0	-23354890.0	2661.0
3.60	26733.5	-477.9	-3069.0	440337.0	-20170320.0	910.0
3.61	20403.5	1249.6	1993.1	-1163000.0	-4959668.0	-473.0
3.62	20564.4	-2043.7	2732.3	1905000.0	-5311382.0	-969.0
3.63	27502.1	2043.3	-3796.8	-1906000.0	-22047300.0	984.0
3.64	27663.0	-1250.0	-3057.6	1163000.0	-22392020.0	489.0
3.65	21144.1	936.5	1865.1	-870509.9	-6726311.0	155.0
3.66	19823.8	-1730.7	2860.3	1613000.0	-3544739.0	-1597.0
3.67	28242.7	1730.2	-3924.8	-1613000.0	-23806940.0	1612.0
3.68	26922.4	-937.0	-2929.6	870092.0	-20632370.0	-140.0
3.69	22756.9	5231.8	-853.9	-4875000.0	-10668100.0	300.0
3.70	23293.3	-5745.8	1610.0	5355000.0	-11837140.0	-1351.0
3.71	24773.2	5745.4	-2674.5	-5355000.0	-15516550.0	1366.0
3.72	25309.6	-5232.3	-210.6	4874000.0	-16685590.0	-284.0
3.73	22700.2	5369.5	-895.7	-5003000.0	-10523480.0	614.0
3.74	23236.7	-5608.1	1568.2	5226000.0	-11702510.0	-1036.0
3.75	24829.8	5607.6	-2632.7	-5226000.0	-15651170.0	1052.0
3.76	25366.3	-5370.0	-168.7	5003000.0	-16830200.0	-599.0
3.77	25225.5	4188.3	-1280.6	-3898000.0	-16553580.0	2394.0
3.78	20824.7	-4702.3	2036.7	4378000.0	-5948654.0	-3445.0
3.79	27241.8	4701.9	-3101.2	-4379000.0	-21402030.0	3460.0
3.80	22841.0	-4188.8	216.1	3898000.0	-10800110.0	-2378.0
3.81	25168.9	4326.0	-1322.4	-4027000.0	-16418960.0	2708.0
3.82	20768.0	-4564.6	1994.9	4250000.0	-5812040.0	-3130.0
3.83	27298.5	4564.1	-3059.4	-4250000.0	-21546640.0	3145.0
3.84	22897.6	-4326.5	257.9	4027000.0	-10934730.0	-2693.0

Calcolo resistenze

Resistenza a trazione dei bulloni $F_{tb,Rd} = 0.9 \cdot f_{tb} \cdot A_{res} / \gamma_{M2} =$ 90333.1 N

Resistenza a punzonamento flangia$B_{pf,Rd} = 0.6 \cdot \pi \cdot d_m \cdot t_f \cdot f_{tk} / \gamma_{M2} =$ 260576.3 N

Resistenza a punzonamento ala passante$B_{pa,Rd} = 0.6 \cdot \pi \cdot d_m \cdot t_a \cdot f_{tk} / \gamma_{M2} =$ 155621.9 N

Bull.	$F_{f,Rd}$ [N]	$F_{t,Rd}$ [N]
1	65308.0	65308.0
2	28228.2	28228.2
3	65308.0	65308.0
4	65308.0	65308.0
5	28228.2	28228.2
6	65308.0	65308.0

Viale Duca Alessandro n. 11 – 43123 Parma
Cell. 335 1403156 – E mail ing.concari@gmail.com
Sito web: studioaire.it – P.IVA 02561480340

Legenda
$F_{f,Rd} = M_{res,m} / (B_m \cdot R_m)$ resistenza a flessione flangia
$F_{t,Rd} = \min [F_{tb,Rd} , B_{pf,Rd} , B_{pa,Rd} , F_{f,Rd}]$ resistenza a trazione di progetto

Resistenza a taglio dei bulloni $F_{vb,Rd} = 0.6 \cdot f_{tb} \cdot A_{res} / \gamma_{M2} =$ 60222.1 N

Bull.	$F_{bf,x,Rd}$ [N]	$F_{ba,x,Rd}$ [N]	$F_{v,x,Rd}$ [N]	$F_{bf,y,Rd}$ [N]	$F_{ba,y,Rd}$ [N]	$F_{v,y,Rd}$ [N]
1	230400.0	106572.5	60222.1	225882.4	137600.0	60222.1
2	230400.0	106572.5	60222.1	230400.0	137600.0	60222.1
3	230400.0	106572.5	60222.1	225882.4	137600.0	60222.1
4	230400.0	106572.5	60222.1	225882.4	137600.0	60222.1
5	230400.0	106572.5	60222.1	230400.0	137600.0	60222.1
6	230400.0	106572.5	60222.1	225882.4	137600.0	60222.1

Legenda
$F_{bf,x,Rd} = k \cdot \alpha \cdot f_{tk} \cdot \varnothing \cdot t_f / \gamma_{M2}$ resistenza a rifollamento flangia in direzione x
$F_{ba,x,Rd} = k \cdot \alpha \cdot f_{tk} \cdot \varnothing \cdot t_a / \gamma_{M2}$ resistenza a rifollamento ala passante in direzione x
$F_{v,x,Rd} = \min [F_{vb,Rd} , F_{bf,x,Rd} , F_{ba,x,Rd}]$ resistenza a taglio di progetto in direzione x
$F_{bf,y,Rd} = k \cdot \alpha \cdot f_{tk} \cdot \varnothing \cdot t_f / \gamma_{M2}$ resistenza a rifollamento flangia in direzione y
$F_{ba,y,Rd} = k \cdot \alpha \cdot f_{tk} \cdot \varnothing \cdot t_a / \gamma_{M2}$ resistenza a rifollamento ala passante in direzione y
$F_{v,y,Rd} = \min [F_{vb,Rd} , F_{bf,y,Rd} , F_{ba,y,Rd}]$ resistenza a taglio di progetto in direzione y

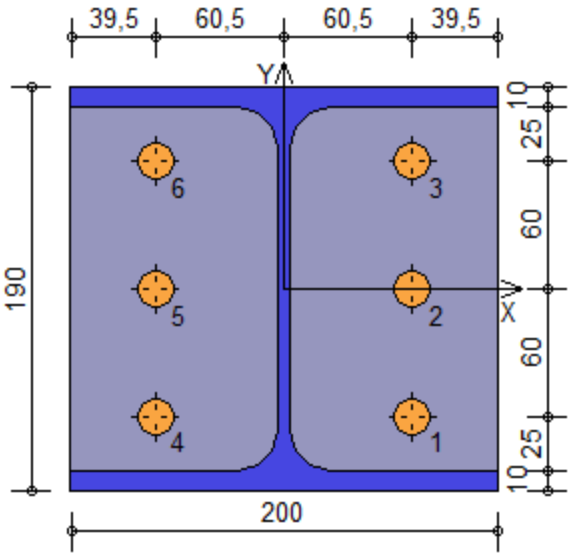

Verifiche sui bulloni

1-Taglio e trazione (Nodo n. 3, CMB n. 36)

Bull.	X [mm]	Y [mm]	$F_{v,Ed}$ [N]	$F_{v,Rd}$ [N]	$F_{t,Ed}$ [N]	$F_{t,Rd}$ [N]	FV_1	VER
1	60.50	-70.00	6766.9	60222.1	8048.3	65308.0	0.200391	Ok
2	60.50	0.00	6766.7	60222.1	27914.7	28228.2	0.818714	Ok
3	60.50	70.00	6766.5	60222.1	47781.1	65308.0	0.634950	Ok
4	-60.50	-70.00	6765.3	60222.1	4116.3	65308.0	0.157360	Ok
5	-60.50	0.00	6765.1	60222.1	23982.7	28228.2	0.719194	Ok
6	-60.50	70.00	6764.9	60222.1	43849.1	65308.0	0.591919	Ok

2-Trazione (Nodo n. 3, CMB n. 36)

Bull.	X [mm]	Y [mm]	$F_{t,Ed}$ [N]	$F_{t,Rd}$ [N]	FV_2	VER
1	60.50	-70.00	8048.3	65308.0	0.123236	Ok
2	60.50	0.00	27914.7	28228.2	0.988892	Ok
3	60.50	70.00	47781.1	65308.0	0.731626	Ok
4	-60.50	-70.00	4116.3	65308.0	0.063030	Ok
5	-60.50	0.00	23982.7	28228.2	0.849601	Ok
6	-60.50	70.00	43849.1	65308.0	0.671420	Ok

Legenda
$F_{v,Ed}$ forza di taglio agente sul bullone
$F_{v,Rd}$ resistenza a taglio di progetto del bullone
$F_{t,Ed}$ forza di trazione agente sul bullone
$F_{t,Rd}$ resistenza a trazione di progetto del bullone
$FV_1 = F_{v,Ed} / F_{v,Rd} + F_{t,Ed} / (1.4 \cdot F_{t,Rd})$
$FV_2 = F_{t,Ed} / F_{t,Rd}$
VER $\rightarrow$ $FV_i \leq 1$

Verifiche sulle saldature profilo-flangia (versione beta)

Si considera la sezione di gola (avente altezza $a = s_c / 2^{0.5} = 5.657$) in posizione ribaltata: vengono considerate positive le tensioni normali di trazione e le tensioni tangenziali agenti verso destra e verso il basso. Tutte le tensioni sono espresse in N/mm^2.

Verifica formula (4.2.84) (Nodo n. 3, CMB n. 48)

Cordoni	Lung.[mm]	$n_\perp$	$t_\perp$	$\tau_\parallel$	FV_1	VER_1
Ala inferiore interno lato destro	94.0	-61.95	0.00	-6.02	62.24	Ok
Ala inferiore interno lato sinistro	94.0	-149.86	0.00	-6.02	149.98	Ok
Anima lato destro	164.0	63.93	0.00	18.63	66.59	Ok
Anima lato sinistro	164.0	63.93	0.00	18.63	66.59	Ok
Ala superiore interno lato destro	94.0	150.30	0.00	-6.02	150.42	Ok

Viale Duca Alessandro n. 11 – 43123 Parma
Cell. 335 1403156 – E mail ing.concari@gmail.com
Sito web: studioaire.it – P.IVA 02561480340

Ala superiore interno lato sinistro	94.0	62.39	0.00	-6.02	62.68	Ok

Verifica formula (4.2.85) (Nodo n. 3, CMB n. 48)

Cordoni	Lung.[mm]	$n_\perp$	$t_\perp$	$\tau_\parallel$	FV_2	VER_2
Ala inferiore interno lato destro	94.0	-61.95	0.00	-6.02	61.95	Ok
Ala inferiore interno lato sinistro	94.0	-149.86	0.00	-6.02	149.86	Ok
Anima lato destro	164.0	63.93	0.00	18.63	63.93	Ok
Anima lato sinistro	164.0	63.93	0.00	18.63	63.93	Ok
Ala superiore interno lato destro	94.0	150.30	0.00	-6.02	150.30	Ok
Ala superiore interno lato sinistro	94.0	62.39	0.00	-6.02	62.39	Ok

Legenda
$n_\perp$ tensione normale perpendicolare all'asse del cordone
$t_\perp$ tensione tangenziale perpendicolare all'asse del cordone
$\tau_\parallel$ tensione tangenziale parallela all'asse del cordone
$FV_1 = (n_\perp^2 + t_\perp^2 + \tau_\parallel^2)^{0.5}$
$FV_2 = |n_\perp| + |t_\perp|$
$VER_i \rightarrow FV_i \leq \beta_i \cdot f_{yk}$ ($\beta_1 \cdot f_{yk}$ = 199.75 N/mm^2 $\beta_2 \cdot f_{yk}$ = 235.00 N/mm^2)

Verifica del momento di progetto del giunto (Nodo n. 3, CMB n. 67)
Momento resistente del giunto $M_{j,Rd}$ = 34969370.0 N mm
Momento di progetto $M_{j,Ed}$ = 23374920.0 N mm
$M_{j,Ed} / M_{j,Rd}$ = 0.668440 Ok

NODO 3: collegamento pilastri-travi (laterali)

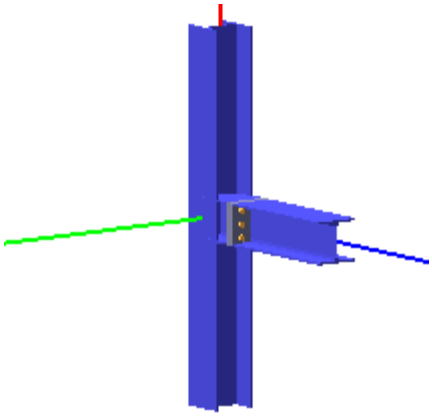

Colonna
Tipo di profilo: HEA 200
Materiale: Acciaio S275 f_y = 275 N/mm^2 f_t = 430 N/mm^2 γ_{ov} = 1.25
Classe sezione: 1

Coefficienti di sicurezza utilizzati
γ_{M0} = 1.05
γ_{M1} = 1.10
γ_{M2} = 1.25

Trave lato 3+
Tipo di profilo: HEA 200
Materiale: Acciaio S275 f_y = 275 N/mm^2 f_t = 430 N/mm^2 γ_{ov} = 1.25
Classe sezione: 1

Flangia:
Materiale: Acciaio S275 f_y = 275 N/mm^2 f_t = 430 N/mm^2 γ_{ov} = 1.25
Dimensioni (B x H x Sp): 200.0 x 190.0 x 20.0 mm

Bullonature:
Viti cl. 8.8 Dadi 8 o 10 (f_{yb} = 640 N/mm^2, f_{tb} = 800 N/mm^2)
Diametro gambo Ø = 16 mm A_{res} = 156.8 mm^2 (ridotta per filettatura)
Diametro dado/testa d_m = 24 mm
Diametro foro $Ø_0$ = 17 mm

Rigidezza giunto (calcolata secondo EN 1993-1-8 : 2005 par. 6.3):
$S_{j,ini}$ non calcolabile

Saldature:
Materiale: Acciaio S275 f_y = 275 N/mm^2 f_t = 430 N/mm^2 β_1 = 0.70 β_2 = 0.85
Spessore cordoni d'angolo s_c = 8 mm

Sollecitazioni nella sezione d'attacco dell'elemento:

Nodo.CMB	V2 [N]	V3 [N]	N [N]	M2 [N mm]	M3 [N mm]	T [N mm]
4.1	692.7	0.2	-2.3	-276.0	3098.2	-4387.0
4.2	972.2	-0.5	523.5	1373.0	-318379.9	-4399.0
4.3	625.4	0.4	-25.5	-580.0	80488.4	-7678.0
4.4	904.8	-0.3	500.3	1070.0	-241008.8	-7691.0

Viale Duca Alessandro n. 11 – 43123 Parma
Cell. 335 1403156 – E mail ing.concari@gmail.com
Sito web: studioaire.it – P.IVA 02561480340

4.5	532.8	0.1	-1.8	-213.0	2373.2	-3374.0
4.6	812.3	-0.5	524.0	1437.0	-319103.9	-3387.0
4.7	465.5	0.3	-25.0	-516.0	79764.4	-6666.0
4.8	745.0	-0.3	500.9	1134.0	-241712.8	-6678.0
4.9	645.6	0.3	-18.6	-489.0	57273.4	-6691.0
4.10	925.0	-0.4	507.3	1161.0	-264223.7	-6703.0
4.11	485.7	0.3	-18.0	-425.0	56549.4	-5678.0
4.12	765.2	-0.4	507.8	1225.0	-264928.7	-5691.0
4.13	5488.1	-1940.3	-1091.9	1135000.0	-5509008.0	-4253.0
4.14	5767.5	-1941.0	-566.0	1137000.0	-5831058.0	-4265.0
4.15	5420.8	-1940.1	-1115.1	1135000.0	-5431485.0	-7544.0
4.16	5700.2	-1940.8	-589.2	1137000.0	-5753535.0	-7557.0
4.17	5328.2	-1940.4	-1091.3	1135000.0	-5510028.0	-3241.0
4.18	5607.7	-1941.0	-565.5	1137000.0	-5831058.0	-3253.0
4.19	5260.9	-1940.2	-1114.5	1135000.0	-5432505.0	-6532.0
4.20	5540.4	-1940.8	-588.7	1137000.0	-5753535.0	-6544.0
4.21	8685.0	-3234.0	-1818.3	1892000.0	-9180829.0	-4164.0
4.22	8964.5	-3234.7	-1292.4	1894000.0	-9504859.0	-4176.0
4.23	8637.9	-3233.9	-1834.5	1892000.0	-9130261.0	-6468.0
4.24	8917.3	-3234.5	-1308.6	1894000.0	-9454311.0	-6480.0
4.25	8525.2	-3234.0	-1817.7	1892000.0	-9182829.0	-3151.0
4.26	8804.6	-3234.7	-1291.9	1894000.0	-9506879.0	-3164.0
4.27	8478.0	-3233.9	-1833.9	1892000.0	-9132280.0	-5455.0
4.28	8757.5	-3234.6	-1308.1	1894000.0	-9456311.0	-5468.0
4.29	5441.0	-1940.2	-1108.1	1135000.0	-5455440.0	-6557.0
4.30	5720.4	-1940.9	-582.3	1137000.0	-5776490.0	-6569.0
4.31	5281.1	-1940.2	-1107.6	1135000.0	-5455460.0	-5545.0
4.32	5560.6	-1940.9	-581.7	1137000.0	-5777490.0	-5557.0
4.33	-4742.1	2199.4	1232.5	-1287000.0	6250395.0	-4539.0
4.34	-4462.6	2198.7	1758.3	-1285000.0	5929365.0	-4551.0
4.35	-4809.4	2199.6	1209.3	-1287000.0	6327918.0	-7830.0
4.36	-4529.9	2198.9	1735.1	-1286000.0	6005888.0	-7842.0
4.37	-4901.9	2199.4	1233.0	-1287000.0	6249395.0	-3526.0
4.38	-4622.5	2198.7	1758.9	-1285000.0	5928345.0	-3539.0
4.39	-4969.3	2199.5	1209.8	-1287000.0	6326898.0	-6818.0
4.40	-4689.8	2198.9	1735.7	-1286000.0	6005868.0	-6830.0
4.41	-4789.2	2199.5	1216.2	-1287000.0	6304963.0	-6843.0
4.42	-4509.7	2198.9	1742.1	-1286000.0	5982933.0	-6855.0
4.43	-4949.1	2199.5	1216.8	-1287000.0	6303943.0	-5830.0
4.44	-4669.6	2198.8	1742.6	-1286000.0	5981913.0	-5843.0
4.45	-8365.2	3665.5	2055.7	-2145000.0	10414870.0	-4640.0
4.46	-8085.8	3664.9	2581.5	-2143000.0	10090820.0	-4652.0
4.47	-8412.4	3665.7	2039.4	-2145000.0	10465420.0	-6944.0
4.48	-8132.9	3665.0	2565.3	-2144000.0	10151390.0	-6956.0
4.49	-8525.1	3665.5	2056.2	-2145000.0	10412850.0	-3627.0
4.50	-8245.6	3664.8	2582.1	-2143000.0	10088820.0	-3640.0
4.51	-8572.2	3665.6	2040.0	-2145000.0	10473420.0	-5931.0
4.52	-8292.8	3665.0	2565.8	-2144000.0	10149370.0	-5944.0
4.53	230.2	-347.3	136.3	202270.0	350223.6	-9104.0
4.54	-5678.7	1100.4	854.3	-645522.0	7143841.0	-9274.0
4.55	6988.6	-1100.7	-315.5	646614.0	-7419533.0	-121.0
4.56	1079.7	347.0	402.4	-201178.0	-626471.1	-292.0
4.57	1303.6	-209.4	62.8	120836.0	-883954.1	-7508.0
4.58	-6752.1	962.5	927.8	-564088.0	8377892.0	-10869.0
4.59	8062.0	-962.8	-389.1	565180.0	-8655584.0	1474.0
4.60	6.3	209.1	475.9	-119744.0	607625.6	-1887.0
4.61	2183.6	-549.7	157.2	322095.0	-1895734.0	-6609.0
4.62	-3725.3	898.0	875.1	-525698.0	4898009.0	-6779.0
4.63	5035.2	-898.3	-336.4	526790.0	-5173701.0	-2616.0
4.64	-873.7	549.4	381.6	-321003.0	1619042.0	-2786.0
4.65	3257.0	-411.8	83.6	240661.0	-3129786.0	-5013.0
4.66	-4798.7	760.1	948.6	-444264.0	6132060.0	-8375.0
4.67	6108.6	-760.4	-409.9	445356.0	-6408753.0	-1021.0
4.68	-1947.1	411.5	455.1	-239569.0	2853093.0	-4382.0
4.69	9489.3	-2300.0	-859.4	1347000.0	-10299770.0	-5761.0
4.70	-10206.9	2525.7	1533.7	-1479000.0	12346070.0	-6329.0
4.71	11516.8	-2526.0	-995.0	1480000.0	-12623760.0	-3066.0
4.72	-8179.4	2299.7	1398.2	-1346000.0	10022080.0	-3634.0
4.73	10075.3	-2360.7	-853.2	1383000.0	-10972420.0	-5013.0
4.74	-9620.9	2465.0	1540.0	-1443000.0	11673420.0	-5580.0
4.75	10930.8	-2465.3	-1001.2	1444000.0	-11951110.0	-3815.0
4.76	-8765.4	2360.4	1391.9	-1382000.0	10694730.0	-4382.0
4.77	13067.3	-1840.4	-1104.5	1075000.0	-14413270.0	-443.0
4.78	-13784.9	2066.1	1778.8	-1208000.0	16459570.0	-11647.0
4.79	15094.9	-2066.4	-1240.1	1209000.0	-16737250.0	2252.0
4.80	-11757.4	1840.1	1643.3	-1074000.0	14135580.0	-8952.0
4.81	13653.4	-1901.1	-1098.3	1111000.0	-15085910.0	306.0
4.82	-13198.9	2005.4	1785.1	-1172000.0	15786920.0	-10899.0
4.83	14508.8	-2005.7	-1246.3	1173000.0	-16064610.0	1503.0
4.84	-12343.4	1900.8	1637.0	-1110000.0	14808230.0	-9701.0

Calcolo resistenze

Resistenza a trazione dei bulloni $F_{tb,Rd} = 0.9 \cdot f_{tb} \cdot A_{res} / \gamma_{M2} =$ 90333.1 N

Resistenza a punzonamento flangia$B_{pf,Rd} = 0.6 \cdot \pi \cdot d_m \cdot t_f \cdot f_{tk} / \gamma_{M2} =$ 311243.9 N

Bull.	$F_{f,Rd}$ [N]	$F_{t,Rd}$ [N]
1	75454.3	75454.3
2	30075.2	30075.2
3	75454.3	75454.3
4	75454.3	75454.3
5	30075.2	30075.2
6	75454.3	75454.3

Legenda

$F_{f,Rd} = M_{res,m} / (B_m \cdot R_m)$ resistenza a flessione flangia

$F_{t,Rd} = \min [F_{tb,Rd} , B_{pf,Rd} , F_{f,Rd}]$ resistenza a trazione di progetto

Resistenza a taglio dei bulloni $F_{vb,Rd} = 0.6 \cdot f_{tb} \cdot A_{res} / \gamma_{M2} =$ 60222.1 N

Bull.	$F_{bf,x,Rd}$ [N]	$F_{v,x,Rd}$ [N]	$F_{bf,y,Rd}$ [N]	$F_{v,y,Rd}$ [N]

Viale Duca Alessandro n. 11 – 43123 Parma
Cell. 335 1403156 – E mail ing.concari@gmail.com
Sito web: studioaire.it – P.IVA 02561480340

1	240125.5	60222.1	188862.8	60222.1
2	240125.5	60222.1	254964.7	60222.1
3	240125.5	60222.1	188862.8	60222.1
4	240125.5	60222.1	188862.8	60222.1
5	240125.5	60222.1	254964.7	60222.1
6	240125.5	60222.1	188862.8	60222.1

Legenda

$F_{bf,x,Rd} = k \cdot \alpha \cdot f_{tk} \cdot \varnothing \cdot t_f / \gamma_{M2}$ resistenza a rifollamento flangia in direzione x
$F_{v,x,Rd} = \min [F_{vb,Rd} , F_{bf,x,Rd}]$ resistenza a taglio di progetto in direzione x
$F_{bf,y,Rd} = k \cdot \alpha \cdot f_{tk} \cdot \varnothing \cdot t_f / \gamma_{M2}$ resistenza a rifollamento flangia in direzione y
$F_{v,y,Rd} = \min [F_{vb,Rd} , F_{bf,y,Rd}]$ resistenza a taglio di progetto in direzione y

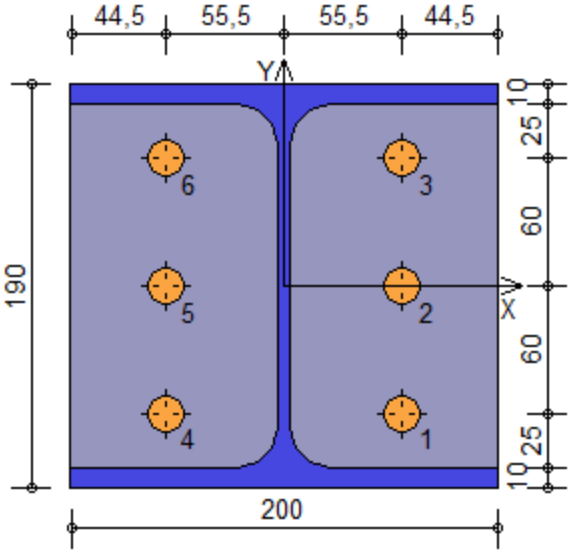

Verifiche sui bulloni

1-Taglio e trazione (Nodo n. 4, CMB n. 79)

Bull.	X [mm]	Y [mm]	$F_{v,Ed}$ [N]	$F_{v,Rd}$ [N]	$F_{t,Ed}$ [N]	$F_{t,Rd}$ [N]	FV_1	VER
1	55.50	-60.00	2535.0	60222.1	3626.2	75454.3	0.076421	Ok
2	55.50	0.00	2535.5	60222.1	23437.2	30075.2	0.598736	Ok
3	55.50	60.00	2536.1	60222.1	43248.2	75454.3	0.451520	Ok
4	-55.50	-60.00	2542.5	60222.1	2572.5	75454.3	0.066571	Ok
5	-55.50	0.00	2543.0	60222.1	22383.5	30075.2	0.573836	Ok
6	-55.50	60.00	2543.6	60222.1	42194.6	75454.3	0.441671	Ok

2-Trazione (Nodo n. 4, CMB n. 79)

Bull.	X [mm]	Y [mm]	$F_{t,Ed}$ [N]	$F_{t,Rd}$ [N]	FV_2	VER
1	55.50	-60.00	3626.2	75454.3	0.048058	Ok
2	55.50	0.00	23437.2	30075.2	0.779287	Ok
3	55.50	60.00	43248.2	75454.3	0.573171	Ok
4	-55.50	-60.00	2572.5	75454.3	0.034093	Ok
5	-55.50	0.00	22383.5	30075.2	0.744252	Ok
6	-55.50	60.00	42194.6	75454.3	0.559207	Ok

Legenda

$F_{v,Ed}$ forza di taglio agente sul bullone
$F_{v,Rd}$ resistenza a taglio di progetto del bullone
$F_{t,Ed}$ forza di trazione agente sul bullone
$F_{t,Rd}$ resistenza a trazione di progetto del bullone
$FV_1 = F_{v,Ed} / F_{v,Rd} + F_{t,Ed} / (1.4 \cdot F_{t,Rd})$
$FV_2 = F_{t,Ed} / F_{t,Rd}$
VER $\rightarrow$ $FV_i \leq 1$

Verifiche sulle saldature profilo-flangia (versione beta)

Si considera la sezione di gola (avente altezza $a = s_c / 2^{0.5} = 5.657$) in posizione ribaltata: vengono considerate positive le tensioni normali di trazione e le tensioni tangenziali agenti verso destra e verso il basso. Tutte le tensioni sono espresse in N/mm^2.

Verifica formula (4.2.84) (Nodo n. 4, CMB n. 79)

Cordoni	Lung.[mm]	$n_\perp$	$t_\perp$	$\tau_\parallel$	FV_1	VER_1
Ala inferiore interno lato destro	78.8	-93.08	0.00	-1.16	93.09	Ok
Ala inferiore interno lato sinistro	78.8	-112.70	0.00	-1.16	112.71	Ok
Anima lato destro	134.0	-78.77	0.00	9.96	79.39	Ok
Anima lato sinistro	134.0	-78.77	0.00	9.96	79.39	Ok
Ala superiore interno lato destro	78.8	111.95	0.00	-1.16	111.96	Ok
Ala superiore interno lato sinistro	78.8	92.33	0.00	-1.16	92.34	Ok

Verifica formula (4.2.85) (Nodo n. 4, CMB n. 79)

Cordoni	Lung.[mm]	$n_\perp$	$t_\perp$	$\tau_\parallel$	FV_2	VER_2
Ala inferiore interno lato destro	78.8	-93.08	0.00	-1.16	93.08	Ok
Ala inferiore interno lato sinistro	78.8	-112.70	0.00	-1.16	112.70	Ok
Anima lato destro	134.0	-78.77	0.00	9.96	78.77	Ok
Anima lato sinistro	134.0	-78.77	0.00	9.96	78.77	Ok
Ala superiore interno lato destro	78.8	111.95	0.00	-1.16	111.95	Ok
Ala superiore interno lato sinistro	78.8	92.33	0.00	-1.16	92.33	Ok

Legenda

$n_\perp$ tensione normale perpendicolare all'asse del cordone

Viale Duca Alessandro n. 11 – 43123 Parma
Cell. 335 1403156 – E mail ing.concari@gmail.com
Sito web: studioaire.it – P.IVA 02561480340

$t_\perp$ tensione tangenziale perpendicolare all'asse del cordone
$\tau_\parallel$ tensione tangenziale parallela all'asse del cordone
$FV_1 = (n_\perp^2 + t_\perp^2 + \tau_\parallel^2)^{0.5}$
$FV_2 = |n_\perp| + |t_\perp|$
$VER_i \rightarrow FV_i \leq \beta_i \cdot f_{yk}$ ($\beta_1 \cdot f_{yk} = 192.50$ N/mm^2 $\beta_2 \cdot f_{yk} = 233.75$ N/mm^2)

Verifica del momento di progetto del giunto (Nodo n. 4, CMB n. 79)

Momento resistente del giunto	$M_{j,Rd}$ =	31270670.0 N mm
Momento di progetto	$M_{j,Ed}$ =	16630110.0 N mm

$M_{j,Ed} / M_{j,Rd}$ = 0.531812 Ok

Le verifiche agli stati limite richieste dalla normativa vigente, effettuate sui modelli tridimensionali realizzati, mediante l'impiego del codice di calcolo sopradescritto, sono risultate positive.

Parma, 30/09/2020

Il tecnico
(Dott. Ing. Martina Eleonora Concari)

_____
(Firmato digitalmente)